AP4252

United States
Environmental Protection
Agency

Office of Air Quality
Planning and Standards
Research Triangle Park NC 27711

AP-42
Fifth Edition
January 1995

Air

EPA

COMPILATION OF AIR POLLUTANT EMISSION FACTORS

VOLUME I: STATIONARY POINT AND AREA SOURCES

FIFTH EDITION

PART TWO

Office of Air Quality
Clean Air
OAQPS
Planning and Standards

6. ORGANIC CHEMICAL PROCESS INDUSTRY

Possible emissions from the manufacture of chemicals and chemical products are significant, but for economic necessity are usually recovered. In some cases, the manufacturing operation either is a closed system or is vented to a combustion device with little or no process vent emissions to the atmosphere. Emission sources from chemical processes include heaters and boilers; valves, flanges, pumps and compressors; storage and transfer of products and intermediates; waste water handling; and emergency vents.

Emissions reaching the atmosphere from chemical processes are generally gaseous and are controlled by incineration, adsorption or absorption. Particulate emissions also could be a problem, since the particulate emitted is usually extremely small, requiring very efficient treatment for removal.

Emission data from chemical processes are sparse. It has been frequently necessary, therefore, to make estimates of emission factors on the basis of material balances, yields or process similarities.

6.1 Carbon Black

6.1.1 Process Description

Carbon black is produced by the reaction of a hydrocarbon fuel such as oil or gas with a limited supply of combustion air at temperatures of 1320 to 1540°C (2400 to 2800°F). The unburned carbon is collected as an extremely fine black fluffy particle, 10 to 500 nanometers (nm) in diameter. The principal uses of carbon black are as a reinforcing agent in rubber compounds (especially tires) and as a black pigment in printing inks, surface coatings, paper, and plastics. Two major processes are presently used in the United States to manufacture carbon black, the oil furnace process and the thermal process. The oil furnace process accounts for about 90 percent of production, and the thermal, about 10 percent. Two others, the lamp process for production of lamp black and the cracking of acetylene to produce acetylene black, are each used at 1 plant in the U. S. However, these are small-volume specialty black operations that constitute less than 1 percent of total production in this country. The gas furnace process is being phased out, and the last channel black plant in the U. S. was closed in 1976.

6.1.1.1 Oil Furnace Process -

In the oil furnace process (Figure 6.1-1 and Table 6.1-1), an aromatic liquid hydrocarbon feedstock is heated and injected continuously into the combustion zone of a natural gas-fired furnace, where it is decomposed to form carbon black. Primary quench water cools the gases to 500°C (1000°F) to stop the cracking. The exhaust gases entraining the carbon particles are further cooled to about 230°C (450°F) by passage through heat exchangers and direct water sprays. The black is then separated from the gas stream, usually by a fabric filter. A cyclone for primary collection and particle agglomeration may precede the filter. A single collection system often serves several manifolded furnaces.

The recovered carbon black is finished to a marketable product by pulverizing and wet pelletizing to increase bulk density. Water from the wet pelletizer is driven off in a gas-fired rotary dryer. Oil or process gas can be used. From 35 to 70 percent of the dryer combustion gas is charged directly to the interior of the dryer, and the remainder acts as an indirect heat source for the dryer. The dried pellets are then conveyed to bulk storage. Process yields range from 35 to 65 percent, depending on the feed composition and the grade of black produced. Furnace designs and operating conditions determine the particle size and the other physical and chemical properties of the black. Generally, yields are highest for large particle blacks and lowest for small particle blacks.

6.1.1.2 Thermal Process -

The thermal process is a cyclic operation in which natural gas is thermally decomposed (cracked) into carbon particles, hydrogen, and a mixture of other organics. Two furnaces are used in normal operation. The first cracks natural gas and makes carbon black and hydrogen. The effluent gas from the first reactor is cooled by water sprays to about 125°C (250°F), and the black is collected in a fabric filter. The filtered gas (90 percent hydrogen, 6 percent methane, and 4 percent higher hydrocarbons) is used as a fuel to heat a second reactor. When the first reactor becomes too cool to crack the natural gas feed, the positions of the reactors are reversed, and the second reactor is used to crack the gas while the first is heated. Normally, more than enough hydrogen is produced to make the thermal black process self-sustaining, and the surplus hydrogen is used to fire boilers that supply process steam and electric power.

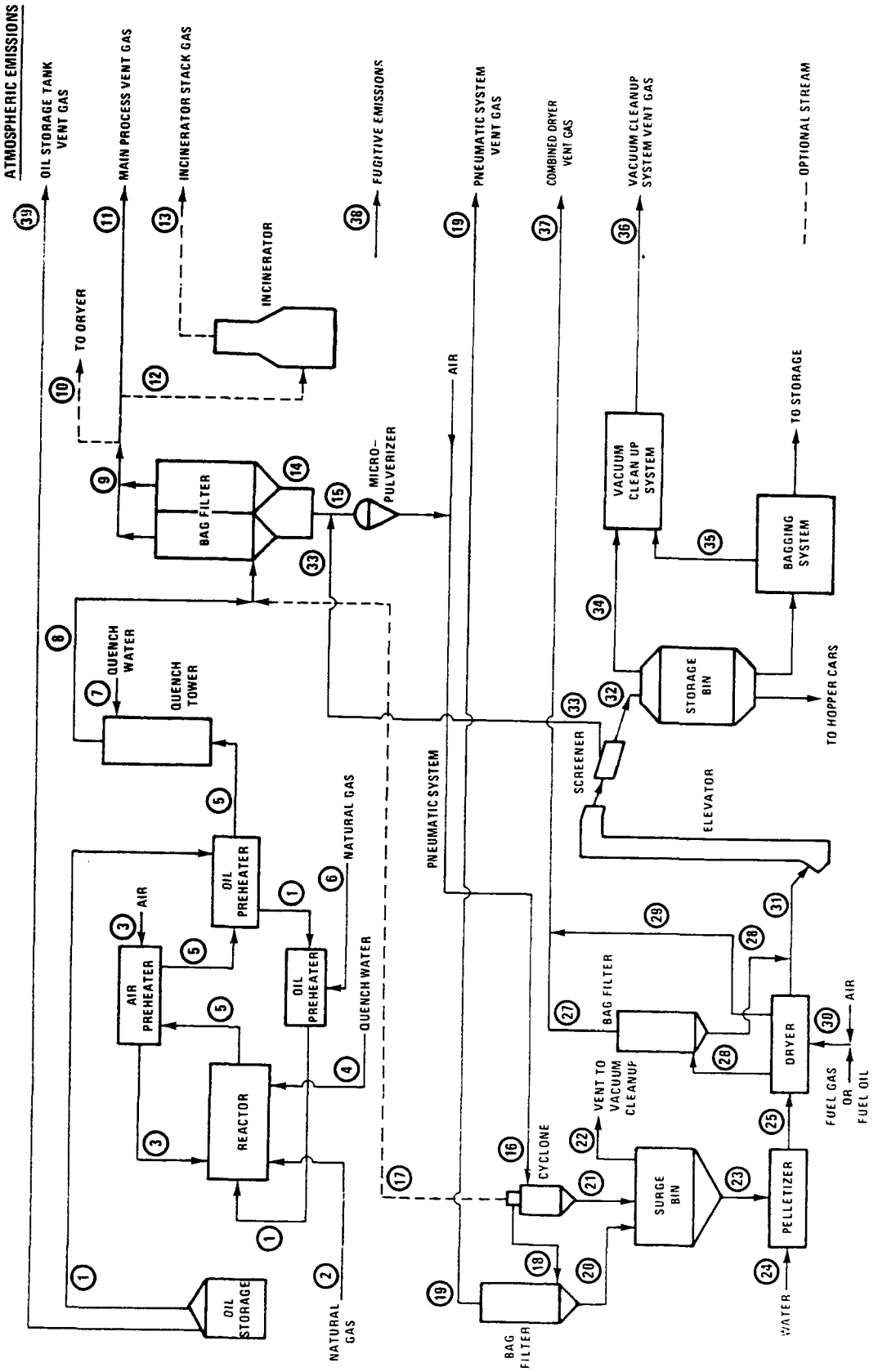

Figure 6.1-1. Flow diagram for the oil furnace carbon black process.

Table 6.1-1. STREAM IDENTIFICATION FOR THE OIL FURNACE PROCESS (FIGURE 6.1-1)

Stream	Identification
1	Oil feed
2	Natural gas feed
3	Air to reactor
4	Quench water
5	Reactor effluent
6	Gas to oil preheater
7	Water to quench tower
8	Quench tower effluent
9	Bag filter effluent
10	Vent gas purge for dryer fuel
11	Main process vent gas
12	Vent gas to incinerator
13	Incinerator stack gas
14	Recovered carbon black
15	Carbon black to micropulverizer
16	Pneumatic conveyor system
17	Cyclone vent gas recycle
18	Cyclone vent gas
19	Pneumatic system vent gas
20	Carbon black from bag filter
21	Carbon black from cyclone
22	Surge bin vent
23	Carbon black to pelletizer
24	Water to pelletizer
25	Pelletizer effluent
26	Dryer direct heat source vent
27	Dryer heat exhaust after bag filter
28	Carbon black from dryer bag filter
29	Dryer indirect heat source vent
30	Hot gases to dryer

Table 6.1-1 (cont.).

Stream	Identification
31	Dried carbon black
32	Screened carbon black
33	Carbon black recycle
34	Storage bin vent gas
35	Bagging system vent gas
36	Vacuum cleanup system vent gas
37	Combined dryer vent gas
38	Fugitive emissions
39	Oil storage tank vent gas

The collected thermal black is pulverized and pelletized to a final product in much the same manner as is furnace black. Thermal process yields are generally high (35 to 60 percent), but the relatively coarse particles produced, 180 to 470 nm, do not have the strong reinforcing properties required for rubber products.

6.1.2 Emissions And Controls

6.1.2.1 Oil Furnace Process -

Emissions from carbon black manufacture include particulate matter, carbon monoxide (CO), organics, nitrogen oxides, sulfur compounds, polycyclic organic matter (POM), and trace elements.

The principal source of emissions in the oil furnace process is the main process vent. The vent stream consists of the reactor effluent and the quench water vapor vented from the carbon black recovery system. Gaseous emissions may vary considerably according to the grade of carbon black being produced. Organic and CO emissions tend to be higher for small particle production, corresponding with the lower yields obtained. Sulfur compound emissions are a function of the feed sulfur content. Tables 6.1-2, 6.1-3, and 6.1-4 show the normal emission ranges to be expected, with typical average values.

The combined dryer vent (stream 37 in Figure 6.1-1) emits carbon black from the dryer bag filter and contaminants from the use of the main process vent gas if the gas is used as a supplementary fuel for the dryer. It also emits contaminants from the combustion of impurities in the natural gas fuel for the dryer. These contaminants include sulfur oxides, nitrogen oxides, and the unburned portion of each of the species present in the main process vent gas (see Table 6.1-2). The oil feedstock storage tanks are a source of organic emissions. Carbon black emissions also occur from the pneumatic transport system vent, the plantwide vacuum cleanup system vent, and from cleaning, spills, and leaks (fugitive emissions).

Gaseous emissions from the main process vent may be controlled with CO boilers, incinerators, or flares. The pellet dryer combustion furnace, which is, in essence, a thermal incinerator, may also be employed in a control system. CO boilers, thermal incinerators, or combinations of these devices can achieve essentially complete oxidation of organics and can oxidize

Table 6.1-2 (Metric And English Units). EMISSION FACTORS FOR CHEMICAL SUBSTANCES FROM OIL FURNACE CARBON BLACK MANUFACTURE[a]

Chemical Substance	Main Process Vent Gas[b]	
	kg/Mg	lb/ton
Carbon disulfide	30	60
Carbonyl sulfide	10	20
Methane	25	50
	(10 - 60)	(20 - 120)
Nonmethane VOC		
Acetylene	45	90
	(5 - 130)	(10 - 260)
Ethane	0[c]	0[c]
Ethylene	1.6	3.2
Propylene	0[c]	0[c]
Propane	0.23	0.46
Isobutane	0.10	0.20
n-Butane	0.27	0.54
n-Pentane	0[c]	0[c]
POM	0.002	0.004
Trace elements[d]	<0.25	<0.50

[a] Expressed in terms of weight of emissions per unit weight of carbon black produced. VOC = volatile organic compounds.
[b] These chemical substances are emitted only from the main process vent. Average values are based on 6 sampling runs made at a representative plant (Reference 1). Ranges given in parentheses are based on results of a survey of operating plants (Reference 4).
[c] Below detection limit of 1 ppm.
[d] Beryllium, lead, and mercury, among several others.

sulfur compounds in the process flue gas. Combustion efficiencies of 99.6 percent for hydrogen sulfide and 99.8 percent for CO have been measured for a flare on a carbon black plant. Particulate emissions may also be reduced by combustion of some of the carbon black particles, but emissions of sulfur dioxide and nitrogen oxides are thereby increased.

6.1.2.2 Thermal Process -

Emissions from the furnaces in this process are very low because the offgas is recycled and burned in the next furnace to provide heat for cracking, or sent to a boiler as fuel. The carbon black is recovered in a bag filter between the 2 furnaces. The rest is recycled in the offgas. Some adheres to the surface of the checkerbrick where it is burned off in each firing cycle.

Table 6.1-3 (Metric Units). EMISSION FACTORS FOR CARBON BLACK MANUFACTURE[a]

EMISSION FACTOR RATING: C

Process	Particulate[b]	Carbon Monoxide	Nitrogen Oxides	Sulfur Oxides	Methane	Nonmethane VOC[c]	Hydrogen Sulfide
Oil furnace process							
Main process vent	3.27[d]	1,400[e]	0.28[e]	0[e,f]	25[e]	50[e]	30[e]
	(0.1 - 5)	(700 - 2,200)	(1 - 2.8)	(0 - 12)	(10 - 60)	(10 - 159)	(5S - 13S)[g]
Flare	1.35	122	ND	25		1.85	1
	(1.2 - 1.5)	(108 - 137)		(21.9 - 28)		(1.7 - 2)	
CO boiler and incinerator	1.04	0.88	4.65	17.5		0.99	0.11
Combined dryer vent[h]							
Bag filter	0.12		0.36	0.26			
	(0.01 - 0.40)		(0.12 - 0.61)	(0.03 - 0.54)			
Scrubber	0.36		1.10	0.20			
	(0.01 - 0.70)						
Pneumatic system vent[h]							
Bag filter	0.29						
	(0.06 - 0.70)						
Oil storage tank vent[i]							
Uncontrolled						0.72	
Vacuum cleanup system vent[h]							
Bag filter	0.03						
	(0.01 - 0.05)						
Fugitive emissions[h]	0.10						
Solid waste incinerator[j]	0.12	0.01	0.04	0.01		0.01	
Thermal process[k]	Neg	Neg	ND	Neg		Neg	Neg

Table 6.1-3 (cont.).

[a] Expressed in terms of weight of emissions per unit weight of carbon black produced. Blanks indicate no emissions. Most plants use bag filters on all process trains for product recovery except solid waste incineration. Some plants may use scrubbers on at least one process train. ND = no data.

[b] The particulate matter is carbon black.

[c] Emission factors do not include organic sulfur compounds that are reported separately in Table 6.1-2. Individual organic species comprising the nonmethane VOC emissions are included in Table 6.1-2.

[d] Average values based on surveys of plants (References 4-5).

[e] Average values based on results of 6 sampling runs conducted at a representative plant with a mean production rate of 5.1 x 10 Mg/yr (5.6 x 10 ton/yr). Ranges of values are based on a survey of 15 plants (Reference 4). Controlled by bag filter.

[f] Not detected at detection limit of 1 ppm.

[g] S is the weight % sulfur in the feed.

[h] Average values and corresponding ranges of values are based on a survey of plants (Reference 4) and on the public files of Louisiana Air Control Commission.

[i] Emission factor calculated using empirical correlations for petrochemical losses from storage tanks (vapor pressure = 0.7 kPa). Emissions are mostly aromatic oils.

[j] Based on emission rates obtained from the National Emissions Data System. All plants do not use solid waste incineration. See Section 2.1.

[k] Emissions from the furnaces are negligible. Emissions from the dryer vent, pneumatic system vent, vacuum cleanup system, and fugitive sources are similar to those for the oil furnace process.

Table 6.1-4 (English Units). EMISSION FACTORS FOR CARBON BLACK MANUFACTURE[a]

EMISSION FACTOR RATING: C

Process	Particulate[b]	Carbon Monoxide	Nitrogen Oxides	Sulfur Oxides	Methane	Nonmethane VOC[c]	Hydrogen Sulfide
Oil furnace process							
Main process vent	6.53[d]	2,800[e]	0.56[e]	0[e,f]	50[e]	100[e]	60[e]
	(0.2 - 10)	(1,400 - 4,400)	(2 - 5.6)	(0 - 24)	(20 - 120)	(20 - 300)	(10S - 26S)[g]
Flare	2.70	245	ND	50		3.7	2
	(2.4 - 3)	(216 - 274)		(44 - 56)		(3.4 - 4)	
CO boiler and incinerator	2.07	1.75	9.3	35.2		1.98	0.22
Combined dryer vent[h]							
Bag filter	0.24		0.73	0.52			
	(0.02 - 0.80)		(0.24 - 1.22)	(0.06 - 1.08)			
Scrubber	0.71		2.20	0.40			
Pneumatic system vent[h]	(0.02 - 1.40)						
Bag filter	0.58						
	(0.12 - 1.40)						
Oil storage tank vent[i]							
Uncontrolled							
Vacuum cleanup system vent[h]						1.44	
Bag filter	0.06						
	(0.02 - 0.10)						
Fugitive emissions[h]	0.20						
Solid waste incinerator[j]	0.24	0.02	0.08	0.02		0.02	
Thermal process[k]	Neg	Neg	ND	Neg		Neg	Neg

Table 6.1-4 (cont.).

[a] Expressed in terms of weight of emissions per unit weight of carbon black produced. Blanks indicate no emissions. Most plants use bag filters on all process trains for product recovery except solid waste incineration. Some plants may use scrubbers on at least one process train. ND = no data.

[b] The particulate matter is carbon black.

[c] Emission factors do not include organic sulfur compounds that are reported separately in Table 6.1-2. Individual organic species comprising the nonmethane VOC emissions are included in Table 6.1-2.

[d] Average values based on surveys of plants (References 4-5).

[e] Average values based on results of 6 sampling runs conducted at a representative plant with a mean production rate of 5.1 x 10 Mg/yr (5.6 x 10 tons/yr). Ranges of values are based on a survey of 15 plants (Reference 4). Controlled by bag filter.

[f] Not detected at detection limit of 1 ppm.

[g] S is the weight % sulfur in the feed.

[h] Average values and corresponding ranges of values are based on a survey of plants (Reference 4) and on the public files of Louisiana Air Control Commission.

[i] Emission factor calculated using empirical correlations for petrochemical losses from storage tanks (vapor pressure = 0.7 kPa). Emissions are mostly aromatic oils.

[j] Based on emission rates obtained from the National Emissions Data System. All plants do not use solid waste incineration. See Section 2.1.

[k] Emissions from the furnaces are negligible. Emissions from the dryer vent, pneumatic system vent, vacuum cleanup system, and fugitive sources are similar to those for the oil furnace process.

Emissions from the dryer vent, the pneumatic transport system vent, the vacuum cleanup system vent, and fugitive sources are similar to those for the oil furnace process, since the operations that give rise to these emissions in the 2 processes are similar. There is no emission point in the thermal process that corresponds to the oil storage tank vents in the oil furnace process. Also in the thermal process, sulfur compounds, POM, trace elements, and organic compound emissions are negligible, because low-sulfur natural gas is used, and the process offgas is burned as fuel.

References For Section 6.1

1. R. W. Serth and T. W. Hughes, *Source Assessment: Carbon Black Manufacture*, EPA-600/2-77-107k, U. S. Environmental Protection Agency, Cincinnati, OH, October 1977.

2. *Air Pollutant Emission Factors*, APTD-0923, U. S. Environmental Protection Agency, Research Triangle Park, NC, April 1970.

3. I. Drogin, "Carbon Black", *Journal of the Air Pollution Control Association, 18*:216-228, April 1968.

4. *Engineering And Cost Study Of Air Pollution Control For The Petrochemical Industry, Vol. 1: Carbon Black Manufacture By The Furnace Process*, EPA-450/3-73-006a, U. S. Environmental Protection Agency, Research Triangle Park, NC, June 1974.

5. K. C. Hustvedt and L. B. Evans, *Standards Support And Emission Impact Statement: An Investigation Of The Best Systems Of Emission Reduction For Furnace Process Carbon Black Plants In The Carbon Black Industry (Draft)*, U. S. Environmental Protection Agency, Research Triangle Park, NC, April 1976.

6. *Source Testing Of A Waste Heat Boiler*, EPA-75-CBK-3, U. S. Environmental Protection Agency, Research Triangle Park, NC, January 1975.

7. R. W. Gerstle and J. R. Richards, *Industrial Process Profiles For Environmental Use, Chapter 4: Carbon Black Industry*, EPA-600-2-77-023d, U. S. Environmental Protection Agency, Cincinnati, OH, February 1977.

8. G. D. Rawlings and T. W. Hughes, "Emission Inventory Data For Acrylonitrile, Phthalic Anhydride, Carbon Black, Synthetic Ammonia, And Ammonium Nitrate", *Proceedings Of APCA Specialty Conference On Emission Factors And Inventories*, Anaheim, CA, November 13-16, 1978.

6.2 Adipic Acid

6.2.1 General[1-4]

Adipic acid, $HOOC(CH_2)_4COOH$, is a white crystalline solid used primarily in the manufacture of nylon-6,6 polyamide and is produced in 4 facilities in the U. S. Worldwide demand for adipic acid in 1989 was nearly 2 billion megagrams (Mg) (2 billion tons), with growth continuing at a steady rate.

Adipic acid historically has been manufactured from either cyclohexane or phenol, but shifts in hydrocarbon markets have nearly resulted in the elimination of phenol as a feedstock in the U. S. This has resulted in experimentation with alternative feedstocks, which may have commercial ramifications.

6.2.2 Process Description[1,3-4]

Adipic acid is manufactured from cyclohexane in two major reactions. The first step, shown in Figure 6.2-1, is the oxidation of cyclohexane to produce cyclohexanone (a ketone) and cyclohexanol (an alcohol). This ketone-alcohol (KA) mixture is then converted to adipic acid by oxidation with nitric acid in the second reaction, as shown in Figure 6.2-2. Following these 2 reaction stages, the wet adipic acid crystals are separated from water and nitric acid. The product is dried and cooled before packaging and shipping. Dibasic acids (DBA) may be recovered from the nitric acid solution and sold as a coproduct. The remaining nitric acid is then recycled to the second reactor.

The predominant method of cyclohexane oxidation is metal-catalyzed oxidation, which employs a small amount of cobalt, chromium, and/or copper, with moderate temperatures and pressures. Air, catalyst, cyclohexane, and in some cases small quantities of benzene are fed into either a multiple-stage column reactor or a series of stirred tank reactors, with a low conversion rate from feedstock to oxidized product. This low rate of conversion necessitates effective recovery and recycling of unreacted cyclohexane through distillation of the oxidizer effluent.

The conversion of the intermediates cyclohexanol and cyclohexanone to adipic acid uses the same fundamental technology as that developed and used since the early 1940s. It entails oxidation with 45 to 55 percent nitric acid in the presence of copper and vanadium catalysts. This results in a very high yield of adipic acid. The reaction is exothermic, and can reach an autocatalytic runaway state if temperatures exceed 150°C (300°F). Process control is achieved by using large amounts of nitric acid. Nitrogen oxides (NO_x) are removed by bleaching with air, water is removed by vacuum distillation, and the adipic acid is separated from the nitric acid by crystallization. Further refining, typically recrystallization from water, is needed to achieve polymer-grade material.

6.2.3 Emissions And Controls[1,3-7]

Emissions from the manufacture of adipic acid consist primarily of organic compounds and carbon monoxide (CO) from the first reaction, NO_x from the second reaction, and particulate matter from product cooling, drying, storage, and loading. Tables 6.2-1 and 6.2-2 present emission factors for the processes in Figure 6.2-1 and Figure 6.6-2, respectively. Emissions estimation of in-process

Table 6.2-1 (Metric And English Units). UNCONTROLLED EMISSION FACTORS FOR PRIMARY OXIDATION ADIPIC ACID MANUFACTURE[a]

EMISSION FACTOR RATING: D

Source (Cyclohexane → KA)	TNMOC[b]		CO		CO_2		CH_4	
	kg/Mg	lb/ton	kg/Mg	lb/ton	kg/Mg	lb/ton	kg/Mg	lb/ton
High-pressure scrubber	7.0[c]	14[b]	25	49	14	28	0.08	0.17
Low-pressure scrubber	1.4[d]	2.8[c]	9.0	18	3.7	7.4	0.05	0.09

[a] Factors are kilograms per megagram (kg/Mg) and pounds per ton (lb/ton) of adipic acid. KA = ketone-alcohol mixture. TNMOC = total nonmethane organic compounds.

[b] One TNMOC composition analysis at a third plant utilizing only 1 scrubber yielded the following speciation: 46% butane, 16% pentane, 33% cyclohexane, 5% other; this test not used in total TNMOC emission factor calculation.

[c] Multiple TNMOC composition analyses from 2 reactors within 1 plant yielded the following average speciation: 1.6% ethane, 1.2% ethylene, 6.7% propane, 63% butane, 16% pentane, 11% cyclohexane.

[d] Multiple TNMOC composition analyses from 2 reactors within 1 plant yielded the following average speciation: 2.3% ethane, 1.7% ethylene, 5.2% propane, 54% butane, 10% pentane, 26% cyclohexane.

Table 6.2-2 (Metric And English Units). UNCONTROLLED EMISSION FACTORS FOR SECONDARY OXIDATION ADIPIC ACID MANUFACTURE[a]

EMISSION FACTOR RATING: E (except as noted)

Source (KA → Adipic Acid)	TNMOC		CO		CO_2		N_2O		NO_x		PM	
	kg/Mg	lb/ton	kg/Mg	lb/ton	kg/Mg	lb/ton	kg/Mg	lb/ton	kg/Mg	lb/ton	kg/Mg	lb/ton
Oxidation reactor[b,c]	0.28	0.55	0.25	0.49	60	120	290[d]	590[d]	7.0	14	NA	NA
Nitric acid tank fume sweep[e]	0.007	0.014	0.14	0.28	2.6	5.2	1.3	2.6	0.81	1.6	NA	NA
Adipic acid refining[f,g]	0.3	0.5	0	0	NA	NA	NA	NA	0.3	0.6	0.1[h]	0.1[h]
Adipic acid drying/cooling/ storage	0	0	0	0	NA	NA	NA	NA	0	0	0.4[h]	0.8[h]

[a] Factors are kilograms per megagram (kg/Mg) and pounds per ton (lb/ton) of adipic acid. KA = ketone-alcohol mixture. TNMOC = total nonmethane organic compounds. NA = not applicable.
[b] One TNMOC composition analysis at a third plant utilizing only 1 scrubber yielded the following speciation: 46% butane, 33% cyclohexane, 5% other; this test not used in total TNMOC emission factor calculation.
[c] EMISSION FACTOR RATING: D
[d] EMISSION FACTOR RATING: A. Controls can reduce emissions by 98% (controlled EMISSION FACTOR RATING: E).
[e] Derived from multiple gas-stream composition analyses at 2 plants, 1 of which can use extended absorption to lower NO_x emissions to 3.2 lb/ton adipic acid.
[f] Derived from gas-stream composition analysis during 1 stack test.
[g] Includes chilling, crystallization, and centrifuging.
[h] Factors are after baghouse control device; no efficiency given.

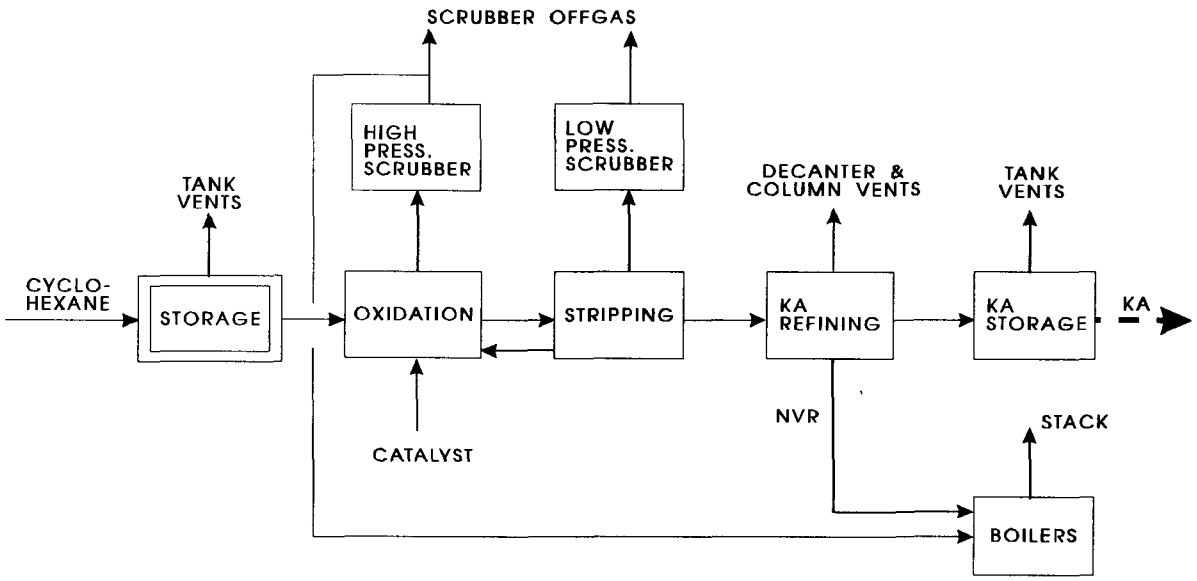

KA = ketone-alcohol mixture

Figure 6.2-1. Adipic acid manufacturing process: Oxidation of cyclohexane.

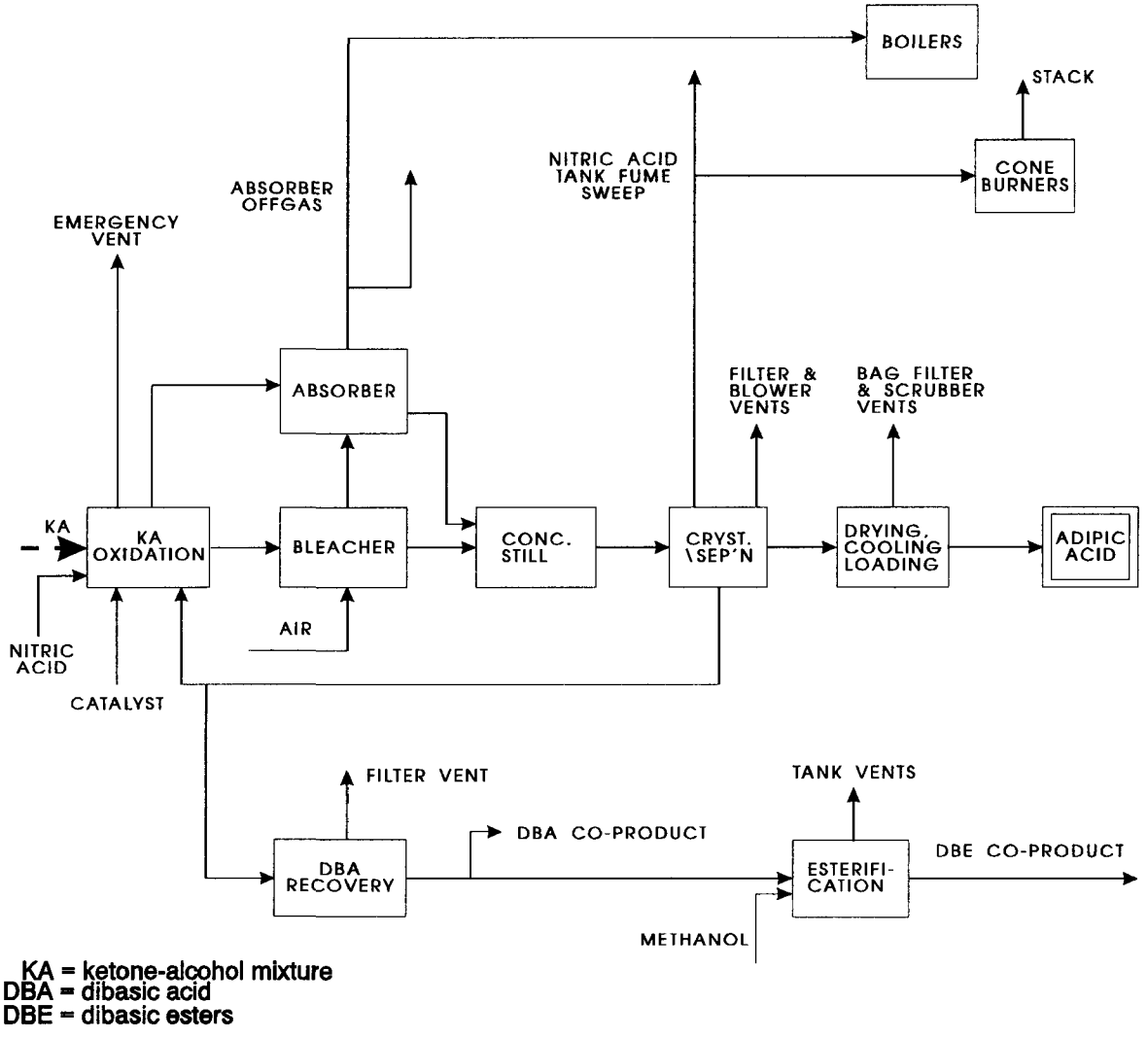

Figure 6.2-2. Adipic acid manufacturing process: Nitric acid oxidation of ketone-alcohol mixture.

combustion products, fractional distillation evaporation losses, oxidizer effluent streams, and storage of volatile raw or intermediate materials, is addressed in Chapter 12, "Metallurgical Industry".

The waste gas stream from cyclohexane oxidation, after removal of most of the valuable unreacted cyclohexane by 1 or more scrubbers, will still contain CO, carbon dioxide (CO_2), and organic compounds. In addition, the most concentrated waste stream, which comes from the final distillation column (sometimes called the "nonvolatile residue"), will contain metals, residues from catalysts, and volatile and nonvolatile organic compounds. Both the scrubbed gas stream and the nonvolatile residue may be used as fuel in process heating units. If a caustic soda solution is used as a final purification step for the KA, the spent caustic waste can be burned or sold as a recovered byproduct. Analyses of gaseous effluent streams at 2 plants indicate that compounds containing cobalt and chromium, in addition to normal products of combustion, are emitted when nonvolatile residue is burned. Caproic, valeric, butyric, and succinic acids are emitted from tanks storing the nonvolatile residue. Cyclohexanone, cyclohexanol, and hexanol are among the organic compounds emitted from the cyclohexane recovery equipment (such as decanters and distillation columns.)

The nitric acid oxidation of the KA results in 2 main streams. The liquid effluent, which contains primarily water, nitric acid, and adipic acid, contains significant quantities of NO_x, which are considered part of the process stream with recoverable economic value. These NO_x are stripped from the stream in a bleaching column using air. The gaseous effluent from oxidation contains NO_x, CO_2, CO, nitrous oxide (N_2O), and DBAs. The gaseous effluent from both the bleacher and the oxidation reactor typically is passed through an absorption tower to recover most of the NO_x, but this process does not significantly reduce the concentration of N_2O in the stream. The absorber offgases and the fumes from tanks storing solutions high in nitric acid content are controlled by extended absorption at 1 of the 3 plants utilizing cyclohexane oxidation, and by thermal reduction at the remaining 2. Extended absorption is accomplished by simply increasing the volume of the absorber, by extending the residence time of the NO_x-laden gases with the absorbing water, and by providing sufficient cooling to remove the heat released by the absorption process. Thermal reduction involves reacting the NO_x with excess fuel in a reducing atmosphere, which is less economical than extended absorption.

Both scrubbers and bag filters are used commonly to control adipic acid dust particulate emissions from product drying, cooling, storage, and loading operations. Nitric acid emissions occur from the product blowers and from the centrifuges and/or filters used to recover adipic acid crystals from the effluent stream leaving the second reactor. When chlorine is added to product cooling towers, all of it can typically be assumed to be emitted to the atmosphere. If DBA are recovered from the nitric acid solution and converted to dibasic esters (DBE) using methanol, methanol emissions will also occur.

References For Section 6.2

1. *Kirk-Othmer Encyclopedia Of Chemical Technology*, "Adipic Acid", Vol. 1, 4th Ed., New York, Interscience Encyclopedia, Inc., 1991.

2. *1990 Directory Of Chemical Producers: United States*, SRI International, Menlo Park, CA.

3. *Alternative Control Techniques Document — Nitric And Adipic Acid Manufacturing Plants*, EPA-450/3-91-026, U. S. Environmental Protection Agency, Research Triangle Park, NC, December 1991.

4. Confidential written communication from J. M. Rung, E. I. duPont de Nemours & Co., Inc., Victoria, TX, to D. Beauregard, U. S. Environmental Protection Agency, Research Triangle Park, NC, 30 April 1992.

5. *Handbook: Control Technologies For Hazardous Air Pollutants*, EPA-625/6-91-014, U. S. Environmental Protection Agency, Cincinnati, OH, June 1991.

6. Confidential written communication letter from C. D. Cary, Allied-Signal Inc., Hopewell, VA, to D. Beauregard, U. S. Environmental Protection Agency, Research Triangle Park, NC, 9 March 1992.

7. M. H. Thiemens and W. C. Trogler, "Nylon Production: An Unknown Source of Atmospheric Nitrous Oxide", *Science 257*:932-934. 1991.

6.3 Explosives

6.3.1 General[1]

An explosive is a material that, under the influence of thermal or mechanical shock, decomposes rapidly and spontaneously with the evolution of large amounts of heat and gas. There are two major categories, high explosives and low explosives. High explosives are further divided into initiating, or primary, high explosives and secondary high explosives. Initiating high explosives are very sensitive and are generally used in small quantities in detonators and percussion caps to set off larger quantities of secondary high explosives. Secondary high explosives, chiefly nitrates, nitro compounds, and nitramines, are much less sensitive to mechanical or thermal shock, but they explode with great violence when set off by an initiating explosive. The chief secondary high explosives manufactured for commercial and military use are ammonium nitrate blasting agents and 2,4,6,-trinitrotoluene (TNT). Low explosives, such as black powder and nitrocellulose, undergo relatively slow autocombustion when set off and evolve large volumes of gas in a definite and controllable manner. Many different types of explosives are manufactured. As examples of high and low explosives, the production of TNT and nitrocellulose (NC) are discussed below.

6.3.2 TNT Production[1-3,6]

TNT may be prepared by either a continuous or a batch process, using toluene, nitric acid (HNO_3) and sulfuric acid as raw materials. The production of TNT follows the same chemical process, regardless of whether batch or continuous method is used. The flow chart for TNT production is shown in Figure 6.3-1. The overall chemical reaction may be expressed as:

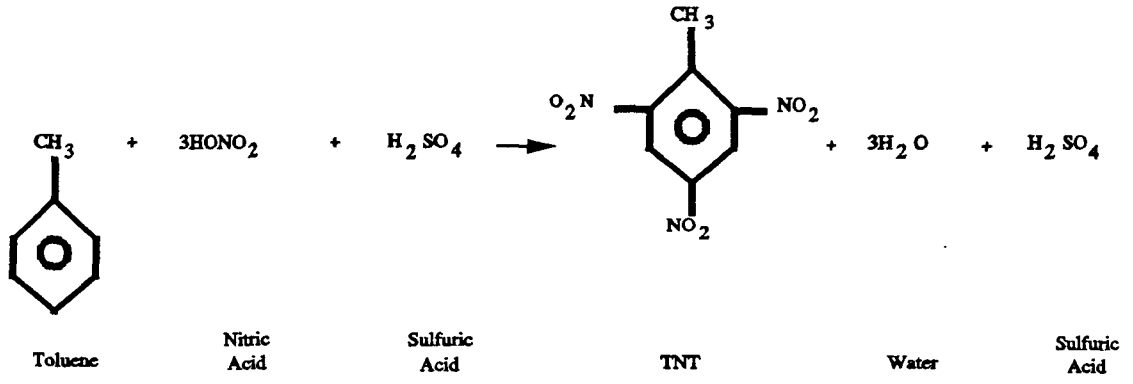

The production of TNT by nitration of toluene is a 3-stage process performed in a series of reactors, as shown in Figure 6.3-2. The mixed acid stream is shown to flow countercurrent to the flow of the organic stream. Toluene and spent acid fortified with a 60 percent HNO_3 solution are fed into the first reactor. The organic layer formed in the first reactor is pumped into the second reactor, where it is subjected to further nitration with acid from the third reactor fortified with additional HNO_3. The product from the second nitration step, a mixture of all possible isomers of dinitrotoluene (DNT), is pumped to the third reactor. In the final reaction, the DNT is treated with a fresh feed of nitric acid and oleum (a solution of sulfur trioxide [SO_3] in anhydrous sulfuric acid). The crude TNT from this third nitration consists primarily of 2,4,6-trinitrotoluene. The crude TNT is washed to remove free acid, and the wash water (yellow water) is recycled to the early nitration stages. The washed TNT is

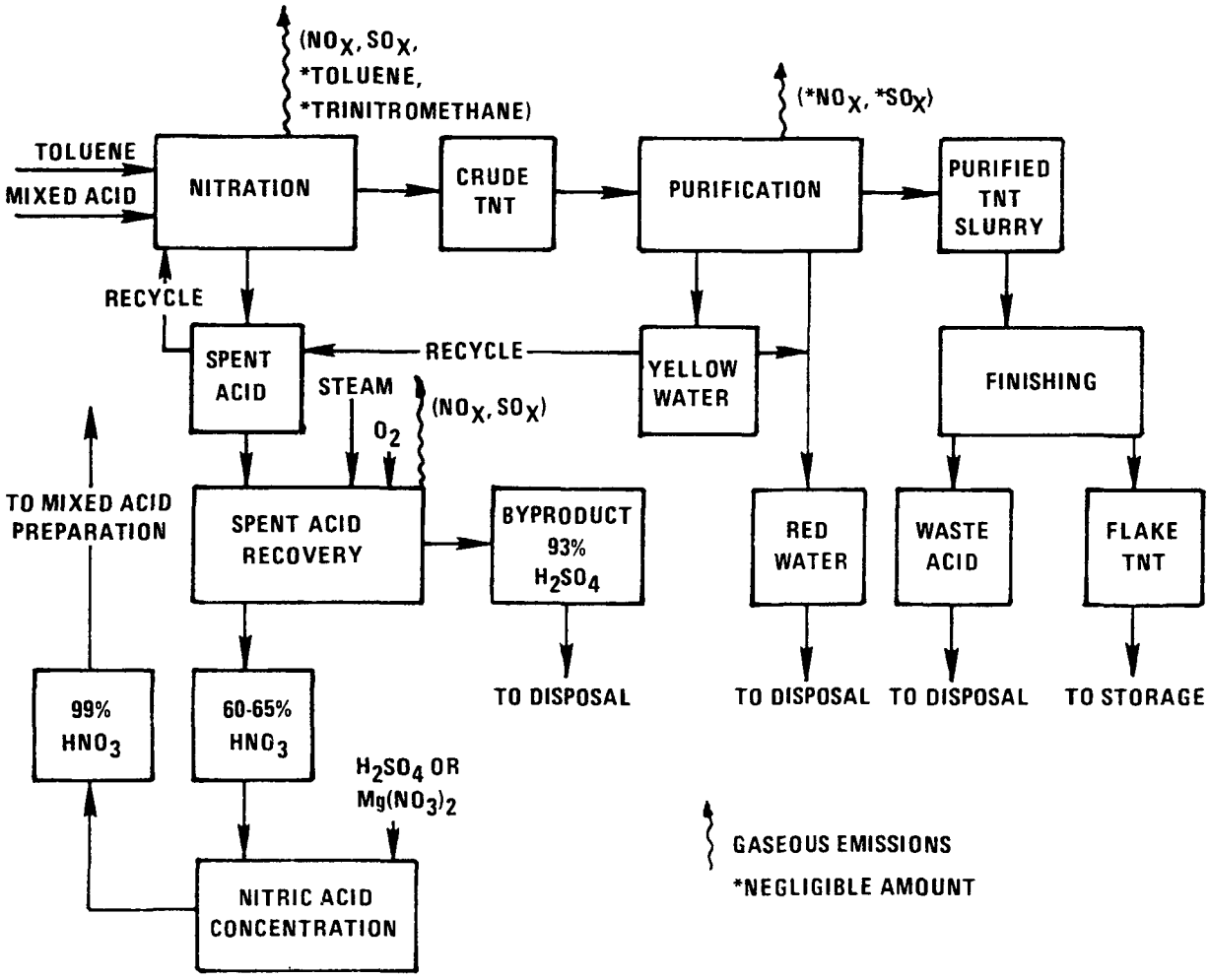

Figure 6.3-1. TNT production.

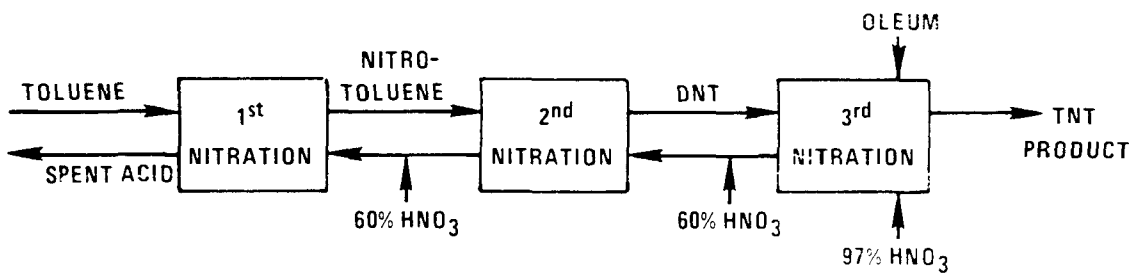

Figure 6.3-2. Nitration of toluene to form trinitrotoluene.

discharged directly as a liquid waste stream, is collected and sold, or is concentrated to a slurry and incinerated. Finally, the TNT crystals are melted and passed through hot air dryers, where most of the water is evaporated. The dehydrated product is solidified, and the TNT flakes packaged for transfer to a storage or loading area.

6.3.3 Nitrocellulose Production[1,6]

Nitrocellulose is commonly prepared by the batch-type mechanical dipper process. A newly developed continuous nitration processing method is also being used. In batch production, cellulose in the form of cotton linters, fibers, or specially prepared wood pulp is purified by boiling and bleaching. The dry and purified cotton linters or wood pulp are added to mixed nitric and sulfuric acid in metal reaction vessels known as dipping pots. The reaction is represented by:

$$(C_6H_7O_2(OH)_3)_x + 3HONO_2 + H_2SO_4 \longrightarrow (C_6H_7O_2(ONO_2)_3)_x + 3H_2O + H_2SO_4$$

Cellulose	Nitric Acid	Sulfuric Acid	Nitrocellulose	Water	Sulfuric Acid

Following nitration, the crude NC is centrifuged to remove most of the spent nitrating acids and is put through a series of water washing and boiling treatments to purify the final product.

6.3.4 Emissions And Controls[2-3,5-7]

Oxides of nitrogen (NO_x) and sulfur (SO_x) are the major emissions from the processes involving the manufacture, concentration, and recovery of acids in the nitration process of explosives manufacturing. Emissions from the manufacture of nitric and sulfuric acid are discussed in other sections. Trinitromethane (TNM) is a gaseous byproduct of the nitration process of TNT manufacture. Volatile organic compound (VOC) emissions result primarily from fugitive vapors from various solvent recovery operations. Explosive wastes and contaminated packaging material are regularly disposed of by open burning, and such results in uncontrolled emissions, mainly of NO_x and particulate matter. Experimental burns of several explosives to determine "typical" emission factors for the open burning of TNT are presented in Table 6.3-1.

Table 6.3-1 (English Units). EMISSION FACTORS FOR THE OPEN BURNING OF TNT[a,b]
(lb pollution/ton TNT burned)

Type Of Explosive	Particulates	Nitrogen Oxides	Carbon Monoxide	Volatile Organic Compounds
TNT	180.0	150.0	56.0	1.1

[a] Reference 7. Particulate emissions are soot. VOC is nonmethane.
[b] The burns were made on very small quantities of TNT, with test apparatus designed to simulate open burning conditions. Since such test simulations can never replicate actual open burning, it is advisable to use the factors in this Table with caution.

In the manufacture of TNT, emissions from the nitrators containing NO, NO_2, N_2O, TNM, and some toluene are passed through a fume recovery system to extract NO_x as nitric acid, and then are

vented through scrubbers to the atmosphere. Final emissions contain quantities of unabsorbed NO_x and TNM. Emissions may also come from the production of Sellite solution and the incineration of red water. Red water incineration results in atmospheric emissions of NO_x, SO_2, and ash (primarily Na_2SO_4.)

In the manufacture of nitrocellulose, emissions from reactor pots and centrifuges are vented to a NO_x water absorber. The weak HNO_3 solution is transferred to the acid concentration system. Absorber emissions are mainly NO_x. Another possible source of emissions is the boiling tubs, where steam and acid vapors vent to the absorber.

The most important fact affecting emissions from explosives manufacture is the type and efficiency of the manufacturing process. The efficiency of the acid and fume recovery systems for TNT manufacture will directly affect the atmospheric emissions. In addition, the degree to which acids are exposed to the atmosphere during the manufacturing process affects the NO_x and SO_x emissions. For nitrocellulose production, emissions are influenced by the nitrogen content and the desired product quality. Operating conditions will also affect emissions. Both TNT and nitrocellulose can be produced in batch processes. Such processes may never reach steady state, emission concentrations may vary considerably with time, and fluctuations in emissions will influence the efficiency of control methods.

Several measures may be taken to reduce emissions from explosive manufacturing. The effects of various control devices and process changes, along with emission factors for explosives manufacturing, are shown in Tables 6.3-2 and 6.3-3. The emission factors are all related to the amount of product produced and are appropriate either for estimating long-term emissions or for evaluating plant operation at full production conditions. For short time periods, or for plants with intermittent operating schedules, the emission factors in Tables 6.3-2 and 6.3-3 should be used with caution because processes not associated with the nitration step are often not in operation at the same time as the nitration reactor.

Table 6.3-2 (Metric Units). EMISSION FACTORS FOR EXPLOSIVES MANUFACTURING[a,b]

EMISSION FACTOR RATING: C

Process	Particulates	Sulfur Oxides (SO_2)	Nitrogen Oxides (NO_2)	Nitric Acid Mist (100% HNO_3)	Sulfur Acid Mist (100% H_2SO_4)
TNT - Batch process[c]					
Nitration reactors					
Fume recovery	—	—	12.5 (3 - 19)	0.5 (0.15 - 0.95)	—
Acid recovery	—	—	27.5 (0.5 - 68)	46 (0.005 - 137)	—
Nitric acid concentrators	—	—	18.5 (8 - 36)	—	4.5 (0.15 - 13.5)
Sulfuric acid concentrators[d]					
Electrostatic precipitator (exit)	—	7 (2 - 20)	20 (1 - 40)	—	32.5 (0.5 - 94)
Electrostatic precipitator with scrubber[e]	—	Neg	20 (1 - 40)	—	2.5 (2 - 3)
Red water incinerator					
Uncontrolled[f]	12.5 (0.015 - 63)	1 (0.025 - 1.75)	13 (0.75 - 50)	—	—
Wet scrubber[g]	0.5	1 (0.025 - 1.75)	2.5	—	—
Sellite exhaust	—	29.5 (0.005 - 88)	—	—	3 (0.3 - 8)
TNT - Continuous process[h]					
Nitration reactors					
Fume recovery	—	—	4 (3.35 - 5)	0.5 (0.15 - 0.95)	—
Acid recovery	—	—	1.5 (0.5 - 2.25)	0.01 (0.005 - 0.015)	—

Table 6.3-2 (cont.).

Process	Particulates	Sulfur Oxides (SO_2)	Nitrogen Oxides (NO_2)	Nitric Acid Mist (100% HNO_3)	Sulfur Acid Mist (100% H_2SO_4)
Red water incinerator	0.13 (0.015 - 0.25)	0.12 (0.025 - 0.22)	3.5 (3 - 4.2)	—	—
Nitrocellulose[h]					
Nitration reactors[i]	—	0.7 (0.04 - 1)	7 (1.85 - 17)	9.5 (0.25 - 18)	—
Nitric acid concentrator	—	—	7 (5 - 9)	—	—
Sulfuric acid concentrator	—	34 (0.2 - 67)	—	—	0.3
Boiling tubs	—	—	1	—	—

[a] For some processes, considerable variations in emissions have been reported. Average of reported values is shown first; ranges in parentheses. Where only 1 number is given, only 1 source test was available. Emission factors are in units of kg of pollutant per Mg of TNT or nitrocellulose produced.

[b] Significant emissions of VOCs have not been reported for the explosives industry. However, negligible emissions of toluene and TNM from nitration reactors have been reported in TNT manufacture. Also, fugitive VOC emissions may result from various solvent recovery operations. See Reference 6.

[c] Reference 5.

[d] Acid mist emissions influenced by nitrobody levels and type of furnace fuel.

[e] No data available for NO_x emissions after scrubber. NO_x emissions are assumed to be unaffected by scrubber.

[f] Use low end of range for modern efficient units, high end for less efficient units.

[g] Apparent reductions in NO_x and particulate after control may not be significant because these values are based on only 1 test result.

[h] Reference 4.

[i] For product with low nitrogen content (12%), use high end of range. For products with higher nitrogen content, use lower end of range.

Table 6.3-3 (English Units). EMISSION FACTORS FOR EXPLOSIVES MANUFACTURING[a,b]

EMISSION FACTOR RATING: C

Process	Particulates	Sulfur Oxides (SO_2)	Nitrogen Oxides (NO_2)	Nitric Acid Mist (100% HNO_3)	Sulfur Acid Mist (100% H_2SO_4)
TNT - Batch process[c]					
Nitration reactors					
Fume recovery	—	—	25 (6 - 38)	1 (0.3 - 1.9)	—
Acid recovery	—	—	55 (1 - 136)	92 (0.02 - 275)	—
Nitric acid concentrators	—	—	37 (16 - 72)	—	9 (0.3 - 27)
Sulfuric acid concentrators[d]					
Electrostatic precipitator (exit)	—	14 (4 - 40)	40 (2 - 80)	—	65 (1 - 188)
Electrostatic precipitator with scrubber[e]	—	Neg	40 (2 - 80)		5 (4 - 6)
Red water incinerator					
Uncontrolled[f]	25 (0.03 - 126)	2 (0.05 - 3.5)	26 (1.5 - 101)	—	—
Wet scrubber[g]	1	2 (0.05 - 3.5)	5	—	—
Sellite exhaust	—	59 (0.01 - 177)	—	—	6 (0.6 - 16)
TNT - Continuous process[h]					
Nitration reactors					
Fume recovery	—	—	8 (6.7 - 10)	1 (0.3 - 1.9)	—
Acid recovery	—	—	3 (1 - 4.5)	0.02 (0.01 - 0.03)	—

Table 6.3-3 (cont.).

Process	Particulates	Sulfur Oxides (SO_2)	Nitrogen Oxides (NO_2)	Nitric Acid Mist (100% HNO_3)	Sulfur Acid Mist (100% H_2SO_4)
Red water incinerator	0.25 (0.03 - 0.5)	0.24 (0.05 - 0.43)	7 (6.1 - 8.4)	—	—
Nitrocellulose[h]					
Nitration reactors[i]	—	1.4 (0.8 - 2)	14 (3.7 - 34)	19 (0.5 - 36)	—
Nitric acid concentrator	—	—	14 (10 - 18)	—	—
Sulfuric acid concentrator	—	68 (0.4 - 135)	—	—	0.6
Boiling tubs	—	—	2	—	—

[a] For some processes, considerable variations in emissions have been reported. Average of reported values is shown first, ranges in parentheses. Where only 1 number is given, only 1 source test was available. Emission factors are in units of pounds of pollutant per ton of TNT or nitrocellulose produced.

[b] Significant emissions of VOCs have not been reported for the explosives industry. However, negligible emissions of toluene and TNM from nitration reactors have been reported in TNT manufacture. Also, fugitive VOC emissions may result from various solvent recovery operations. See Reference 6.

[c] Reference 5.

[d] Acid mist emissions influenced by nitrobody levels and type of furnace fuel.

[e] No data available for NO_x emissions after scrubber. NO_x emissions are assumed to be unaffected by scrubber.

[f] Use low end of range for modern efficient units, high end for less efficient units.

[g] Apparent reductions in NO_x and particulate after control may not be significant because these values are based on only 1 test result.

[h] Reference 4.

[i] For product with low nitrogen content (12%), use high end of range. For products with higher nitrogen content, use lower end of range.

References For Section 6.3

1. R. N. Shreve, *Chemical Process Industries*, 3rd Ed., McGraw-Hill Book Company, New York, 1967.

2. Unpublished data on emissions from explosives manufacturing, Office Of Criteria And Standards, National Air Pollution Control Administration, Durham, NC, June 1970.

3. F. B. Higgins, Jr., *et al.*, "Control of Air Pollution From TNT Manufacturing", Presented at 60th annual meeting of Air Pollution Control Association, Cleveland, OH, June 1967.

4. *Air Pollution Engineering Source Sampling Surveys*, Radford Army Ammunition Plant, U. S. Army Environmental Hygiene Agency, Edgewood Arsenal, MD, July 1967, July 1968.

5. *Air Pollution Engineering Source Sampling Surveys*, Volunteer Army Ammunition Plant And Joliet Army Ammunition Plant, U. S. Army Environmental Hygiene Agency, Edgewood Arsenal, MD, July 1967, July 1968.

6. *Industrial Process Profiles For Environmental Use: The Explosives Industry*, EPA-600/2-77-0231, U. S. Environmental Protection Agency, Cincinnati, OH, February 1977.

7. *Specific Air Pollutants From Munitions Processing And Their Atmospheric Behavior, Volume 4: Open Burning And Incineration Of Waste Munitions*, Research Triangle Institute, Research Triangle Park, NC, January 1978.

6.4 Paint And Varnish

6.4.1 Paint Manufacturing[1]

The manufacture of paint involves the dispersion of a colored oil or pigment in a vehicle, usually an oil or resin, followed by the addition of an organic solvent for viscosity adjustment. Only the physical processes of weighing, mixing, grinding, tinting, thinning, and packaging take place. No chemical reactions are involved.

These processes take place in large mixing tanks at approximately room temperature.

The primary factors affecting emissions from paint manufacture are care in handling dry pigments, types of solvents used, and mixing temperature. About 1 or 2 percent of the solvent is lost even under well-controlled conditions. Particulate emissions amount to 0.5 to 1.0 percent of the pigment handled.

Afterburners can reduce emitted volatile organic compounds (VOC) by 99 percent and particulates by about 90 percent. A water spray and oil filter system can reduce particulate emissions from paint blending by 90 percent.

6.4.2 Varnish Manufacturing[1-3,5]

The manufacture of varnish also involves the mixing and blending of various ingredients to produce a wide range of products. However in this case, chemical reactions are initiated by heating. Varnish is cooked in either open or enclosed gas-fired kettles for periods of 4 to 16 hours at temperatures of 93 to 340°C (200 to 650°F).

Varnish cooking emissions, largely in the form of volatile organic compounds, depend on the cooking temperatures and times, the solvent used, the degree of tank enclosure and the type of air pollution controls used. Emissions from varnish cooking range from 1 to 6 percent of the raw material.

To reduce organic compound emissions from the manufacture of paint and varnish, control techniques include condensers and/or adsorbers on solvent handling operations, and scrubbers and afterburners on cooking operations. Afterburners can reduce volatile organic compounds by 99 percent. Emission factors for paint and varnish are shown in Table 6.4-1.

Table 6.4-1 (Metric And English Units). UNCONTROLLED EMISSION FACTORS FOR PAINT AND VARNISH MANUFACTURING[a,b]

EMISSION FACTOR RATING: C

Type Of Product	Particulate		Nonmethane VOC[c]	
	kg/Mg Pigment	lb/ton Pigment	kg/Mg Of Product	lb/ton Of Product
Paint[d]	10	20	15	30
Varnish				
Bodying oil	—	—	20	40
Oleoresinous	—	—	75	150
Alkyd	—	—	80	160
Acrylic	—	—	10	20

[a] References 2,4-8.
[b] Afterburners can reduce VOC emissions by 99% and particulates by about 90%. A water spray and oil filter system can reduce particulates by about 90%.
[c] Expressed as undefined organic compounds whose composition depends upon the type of solvents used in the manufacture of paint and varnish.
[d] Reference 4. Particulate mater (0.5 - 1.0%) is emitted from pigment handling.

References For Section 6.4

1. *Air Pollutant Emission Factors*, APTD-0923, U. S. Environmental Protection Agency, Research Triangle Park, NC, April 1970.

2. R. L. Stenburg, "Controlling Atmospheric Emissions From Paint And Varnish Operations, Part I", *Paint And Varnish Production*, September 1959.

3. Private communication between Resources Research, Inc., Reston, VA, And National Paint, Varnish And Lacquer Association, Washington, DC, September 1969.

4. Unpublished engineering estimates based on plant visits in Washington, DC, Resources Research, Inc., Reston, VA, October 1969.

5. *Air Pollution Engineering Manual*, Second Edition, AP-40, U. S. Environmental Protection Agency, Research Triangle Park, NC, May 1973.

6. E. G. Lunche, *et al.*, "Distribution Survey Of Products Emitting Organic Vapors In Los Angeles County", *Chemical Engineering Progress*, *53*(8):371-376, August 1957.

7. Communication on emissions from paint and varnish operations between Resources Research, Inc., Reston, VA, and G. Sallee, Midwest Research Institute, Kansas City, MO, December 17, 1969.

8. Communication between Resources Research, Inc., Reston, VA, and Roger Higgins, Benjamin Moore Paint Company, June 25, 1968.

6.5 Phthalic Anhydride

6.5.1 General[1]

Phthalic anhydride (PAN) production in the United States in 1972 was 0.9 billion pounds per year; this total is estimated to increase to 2.2 billion pounds per year by 1985. Of the current production, 50 percent is used for plasticizers, 25 percent for alkyd resins, 20 percent for unsaturated polyester resins, and 5 percent for miscellaneous and exports. PAN is produced by catalytic oxidation of either orthoxylene or naphthalene. Since naphthalene is a higher-priced feedstock and has a lower feed utilization (about 1.0 lb PAN/lb o-xylene versus 0.97 lb PAN/lb naphthalene), future production growth is predicted to utilize o-xylene. Because emission factors are intended for future as well as present application, this report will focus mainly on PAN production utilizing o-xylene as the main feedstock.

The processes for producing PAN by o-xylene or naphthalene are the same except for reactors, catalyst handling, and recovery facilities required for fluid bed reactors.

In PAN production using o-xylene as the basic feedstock, filtered air is preheated, compressed, and mixed with vaporized o-xylene and fed into the fixed-bed tubular reactors. The reactors contain the catalyst, vanadium pentoxide, and are operated at 650 to 725°F (340 to 385°C). Small amounts of sulfur dioxide are added to the reactor feed to maintain catalyst activity. Exothermic heat is removed by a molten salt bath circulated around the reactor tubes and transferred to a steam generation system.

Naphthalene-based feedstock is made up of vaporized naphthalene and compressed air. It is transferred to the fluidized bed reactor and oxidized in the presence of a catalyst, vanadium pentoxide, at 650 to 725°F (340 to 385°C). Cooling tubes located in the catalyst bed remove the exothermic heat, which is used to produce high-pressure steam. The reactor effluent consists of PAN vapors, entrained catalyst, and various byproducts and nonreactant gas. The catalyst is removed by filtering and returned to the reactor.

The chemical reactions for air oxidation of o-xylene and naphthalene are as follows.

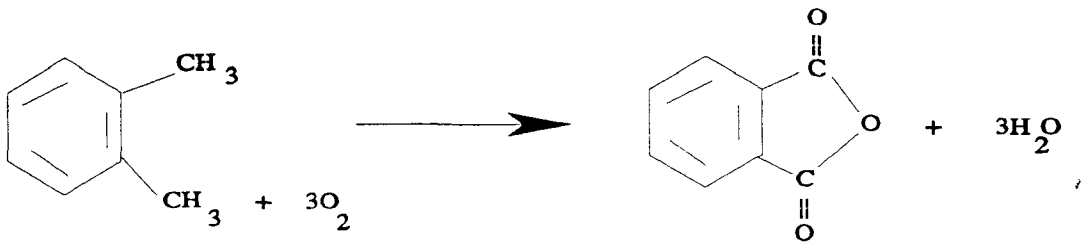

o-xylene + oxygen phthalic anhydride + water

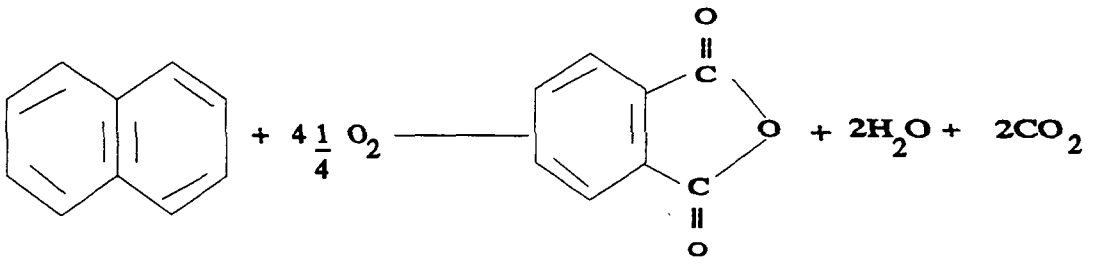

naphthalene + oxygen — phthalic anhydride + water + carbon dioxide

The reactor effluent containing crude PAN plus products from side reactions and excess oxygen passes to a series of switch condensers where the crude PAN cools and crystallizes. The condensers are alternately cooled and then heated, allowing PAN crystals to form and then melt from the condenser tube fins.

The crude liquid is transferred to a pretreatment section in which phthalic acid is dehydrated to anhydride. Water, maleic anhydride, and benzoic acid are partially evaporated. The liquid then goes to a vacuum distillation section where pure PAN (99.8 wt. percent pure) is recovered. The product can be stored and shipped either as a liquid or a solid (in which case it is dried, flaked, and packaged in multi-wall paper bags). Tanks for holding liquid PAN are kept at 300°F (150°C) and blanketed with dry nitrogen to prevent the entry of oxygen (fire) or water vapor (hydrolysis to phthalic acid).

Maleic anhydride is currently the only byproduct being recovered.

Figure 6.5-1 and Figure 6.5-2 show the process flow for air oxidation of o-xylene and naphthalene, respectively.

6.5.2 Emissions And Controls[1]

Emissions from o-xylene and naphthalene storage are small and presently are not controlled.

The major contributor of emissions is the reactor and condenser effluent which is vented from the condenser unit. Particulate, sulfur oxides (for o-xylene-based production), and carbon monoxide make up the emissions, with carbon monoxide comprising over half the total. The most efficient (96 percent) system of control is the combined usage of a water scrubber and thermal incinerator. A thermal incinerator alone is approximately 95 percent efficient in combustion of pollutants for o-xylene-based production, and 80 percent efficient for naphthalene-based production. Thermal incinerators with steam generation show the same efficiencies as thermal incinerators alone. Scrubbers have a 99 percent efficiency in collecting particulates, but are practically ineffective in reducing carbon monoxide emissions. In naphthalene-based production, cyclones can be used to control catalyst dust emissions with 90 to 98 percent efficiency.

Pretreatment and distillation emissions—particulates and hydrocarbons—are normally processed through the water scrubber and/or incinerator used for the main process stream (reactor and condenser) or scrubbers alone, with the same efficiency percentages applying.

Product storage in the liquid phase results in small amounts of gaseous emissions. These gas streams can either be sent to the main process vent gas control devices or first processed through sublimation boxes or devices used to recover escaped PAN. Flaking and bagging emissions are negligible, but can be sent to a cyclone for recovery of PAN dust. Exhaust from the cyclone presents no problem.

Table 6.5-1 gives emission factors for controlled and uncontrolled emissions from the production of PAN.

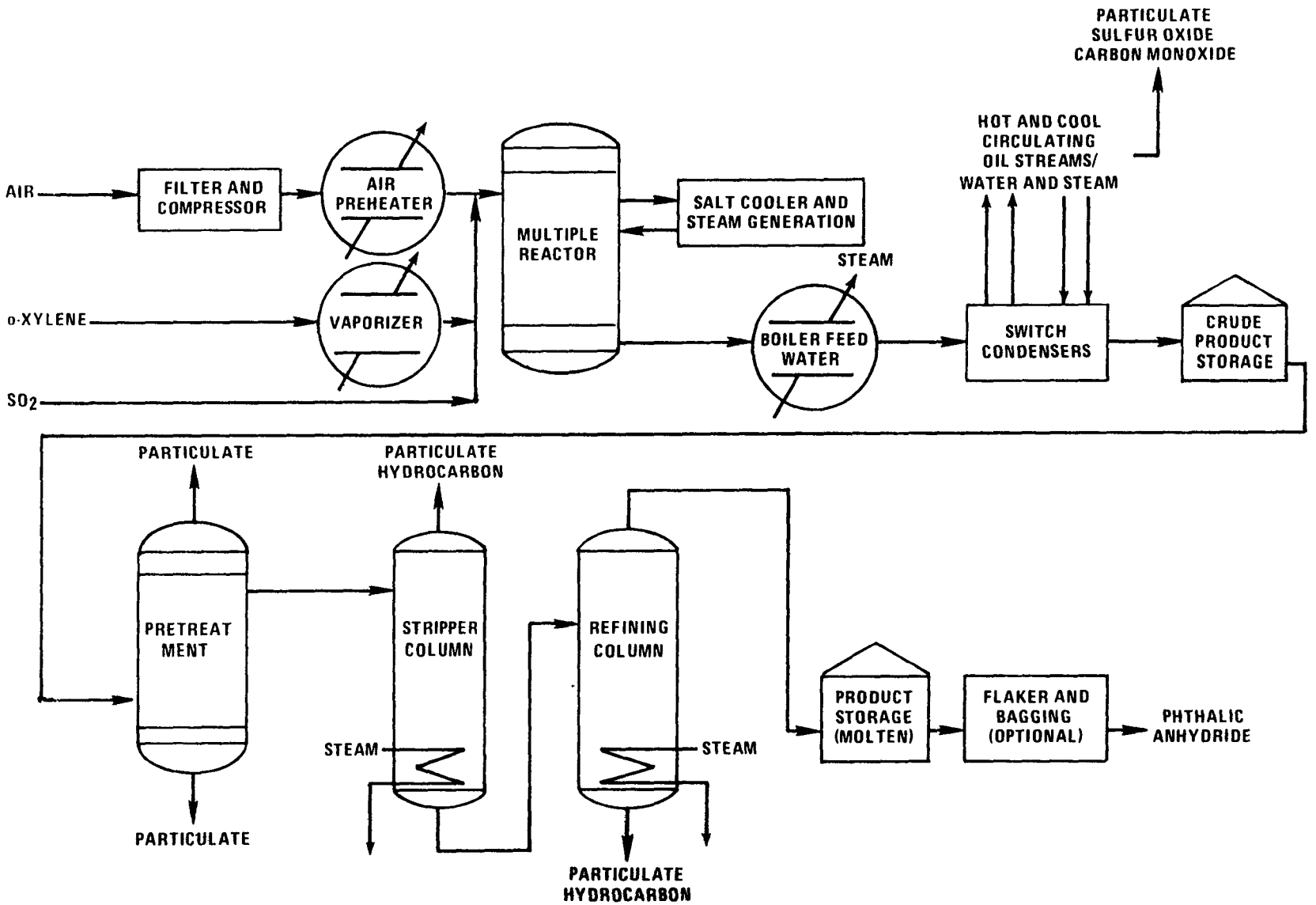

Figure 6.5-1. Flow diagram for phthalic anhydride using o-xylene as basic feedstock.[1]

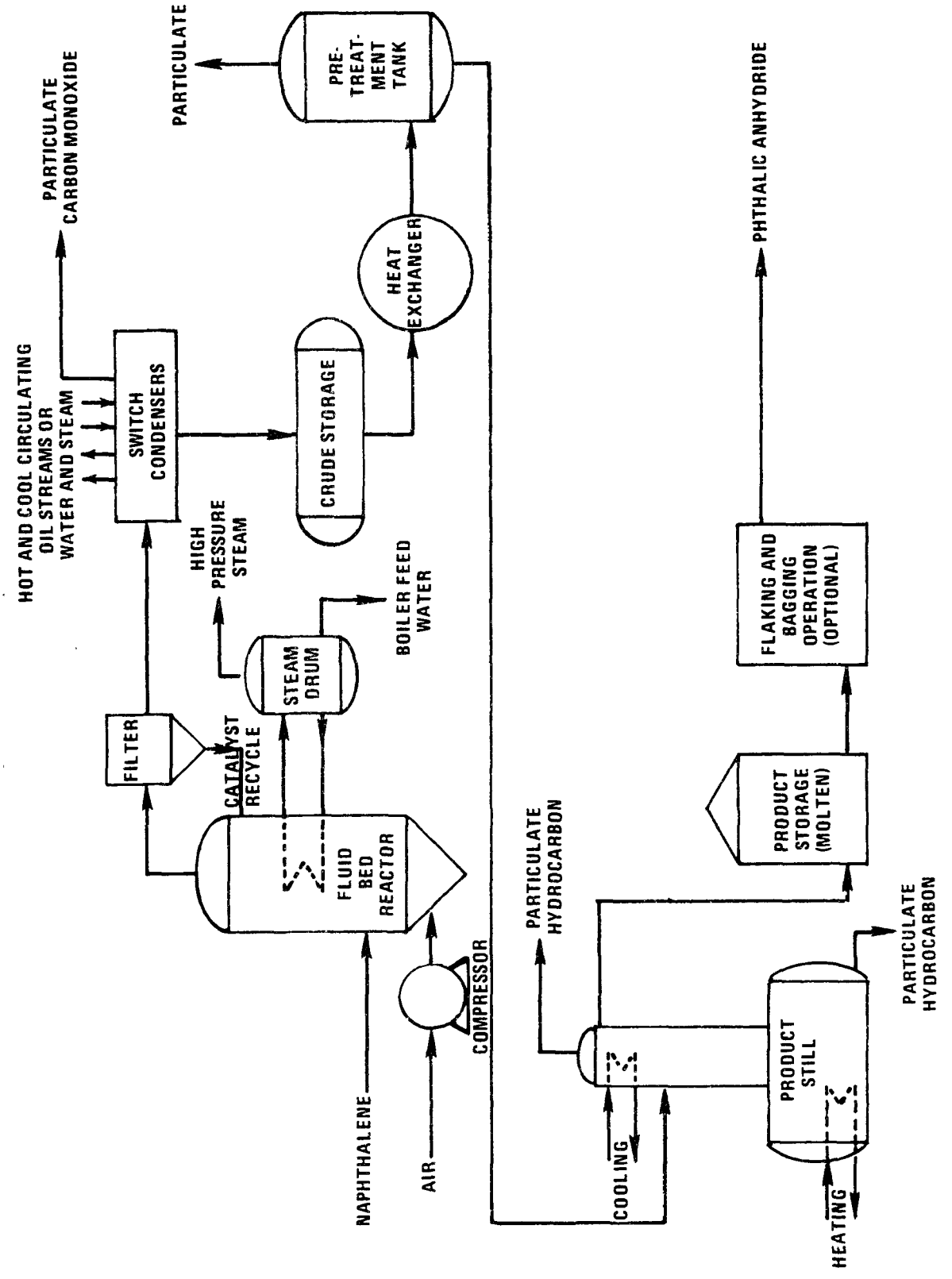

Figure 6.5-2. Flow diagram for phthalic anhydride using naphthalene as basic feedstock.[1]

Table 6.5-1 (Metric And English Units). EMISSION FACTORS FOR PHTHALIC ANHYDRIDE[a]

EMISSION FACTOR RATING: B

Process	Particulate		SO_x		Nonmethane VOC[b]		CO	
	kg/Mg	lb/ton	kg/Mg	lb/ton	kg/Mg	lb/ton	kg/Mg	lb/ton
Oxidation of o-xylene[c]								
Main process stream[d]								
Uncontrolled	69[e]	138[e]	4.7[f]	9.4[f]	0	0	151	301
W/scrubber and thermal incinerator	3	6	4.7	9.4	0	0	6	12
W/thermal incinerator	4	7	4.7	9.4	0	0	8	15
W/incinerator with steam generator	4	7	4.7	9.4	0	0	8	15
Pretreatment								
Uncontrolled	6.4[g]	13[g]	0	0	0	0	0	0
W/scrubber and thermal incinerator	0.3	0.5	0	0	0	0	0	0
W/thermal incinerator	0.4	0.7	0	0	0	0	0	0
Distillation								
Uncontrolled	45[e]	89[e]	0	0	1.2[e,h]	2.4[e,h]	0	0
W/scrubber and thermal incinerator	2	4	0	0	<0.1	<0.1	0	0
W/thermal incinerator	2	4	0	0	<0.1	0.1	0	0
Oxidation of naphthalene[c]								
Main process stream[d]								
Uncontrolled	28[j,k]	56[j,k]	0	0	0	0	50	100
W/thermal incinerator	6	11	0	0	0	0	10	20
W/scrubber	0.3	0.6	0	0	0	0	50	100
Pretreatment								
Uncontrolled	2.5[m]	5[m]	0	0	0	0	0	0
W/thermal incinerator	0.5	1	0	0	0	0	0	0
W/scrubber	<0.1	<0.1	0	0	0	0	0	0

Table 6.5-1 (cont.).

Process	Particulate		SO_x		Nonmethane VOC[b]		CO	
	kg/Mg	lb/ton	kg/Mg	lb/ton	kg/Mg	lb/ton	kg/Mg	lb/ton
Distillation								
Uncontrolled	19[j]	38[j]	0	0	5[h,j]	10[h,j]	0	0
W/thermal incinerator	4	8	0	0	1	2	0	0
W/scrubber	0.2	0.4	0	0	<0.1	0.1	0	0

[a] Reference 1. Factors are in kg of pollutant/Mg (lb/ton) of phthalic athydride produced.
[b] Emissions contain no methane.
[c] Control devices listed are those currently being used by phthalic anhydride plants.
[d] Main process stream includes reactor and multiple switch condensers as vented through condenser unit.
[e] Consists of phthalic anhydride, maleic anhydride, benzoic acid.
[f] Value shown corresponds to relatively fresh catalyst, which can change with catalyst age. Can be 9.5 - 13 kg/Mg (19 - 25 lb/ton) for aged catalyst.
[g] Consists of phthalic anhydride and maleic anhydride.
[h] Normally a vapor, but can be present as a particulate at low temperature.
[j] Consists of phthalic anhydride, maleic anhydride, naphthaquinone.
[k] Does not include catalyst dust, controlled by cyclones with efficiency of 90 - 98%.
[m] Particulate is phthalic anhydride.

Reference For Section 6.5

1. *Engineering And Cost Study Of Air Pollution Control For The Petrochemical Industry, Vol. 7: Phthalic Anhydride Manufacture From Ortho-xylene,* EPA-450/3-73-006g, U. S. Environmental Protection Agency, Research Triangle Park, NC, July 1975.

6.6 Plastics

6.6.1 Polyvinyl Chloride

6.6.2 Poly(ethylene Terephthalate)

6.6.3 Polystyrene

6.6.1 Polyvinyl Chloride

6.6.1.1 Process Description[1]

The manufacture of most resins or plastics begins with the polymerization or linking of the basic compound (monomer), usually a gas or liquid, into high molecular weight noncrystalline solids. The manufacture of the basic monomer is not considered part of the plastics industry and is usually accomplished at a chemical or petroleum plant.

The manufacture of most plastics involves an enclosed reaction or polymerization step, a drying step, and a final treating and forming step. These plastics are polymerized or otherwise combined in completely enclosed stainless steel or glass-lined vessels. Treatment of the resin after polymerization varies with the proposed use. Resins for moldings are dried and crushed or ground into molding powder. Resins such as the alkyd to be used for protective coatings are usually transferred to an agitated thinning tank, where they are thinned with some type of solvent and then stored in large steel tanks equipped with water-cooled condensers to prevent loss of solvent to the atmosphere. Still other resins are stored in latex form as they come from the kettle.

6.6.1.2 Emissions And Controls[1]

The major sources of air contamination in plastics manufacturing are the raw materials or monomers, solvents, or other volatile liquids emitted during the reaction; sublimed solids such as phthalic anhydride emitted in alkyd production; and solvents lost during storage and handling of thinned resins. Emission factors for the manufacture of polyvinyl chloride are shown in Table 6.6.1-1.

Table 6.6.1-1 (Metric And English Units). UNCONTROLLED EMISSION FACTORS FOR PLASTICS MANUFACTURING[a]

EMISSION FACTOR RATING: E

Type of Plastic	Particulate		Gases	
	kg/Mg	lb/ton	kg/Mg	lb/ton
Polyvinyl chloride	17.5[b]	35[b]	8.5[c]	17[c]

[a] References 2-3.
[b] Usually controlled with fabric filter, efficiency of 98-99%.
[c] As vinyl chloride.

Much of the control equipment used in this industry is a basic part of the system serving to recover a reactant or product. These controls include floating roof tanks or vapor recovery systems on volatile material, storage units, vapor recovery systems (adsorption or condensers), purge lines venting to a flare system, and vacuum exhaust line recovery systems.

References For Section 6.6.1

1. *Air Pollutant Emission Factors, Final Report*, Resources Research, Inc., Reston, VA, Prepared for National Air Pollution Control Administration, Durham, NC, under Contract Number CPA-22-69-119, April 1970.

2. Unpublished data, U. S. Department of Health and Human Services, National Air Pollution Control Administration, Durham, NC, 1969.

3. Communication between Resources Research, Inc., Reston, VA, and State Department Of Health, Baltimore, MD, November 1969.

6.6.2 Poly(ethylene Terephthalate)[1-2]

6.6.2.1 General

Poly(ethylene terephthalate), or PET, is a thermoplastic polyester resin. Such resins may be classified as low-viscosity or high-viscosity resins. Low-viscosity PET typically has an intrinsic viscosity of less than 0.75, while high-viscosity PET typically has an intrinsic viscosity of 0.9 or higher. Low-viscosity resins, which are sometimes referred to as "staple" PET (when used in textile applications), are used in a wide variety of products, such as apparel fiber, bottles, and photographic film. High-viscosity resins, sometimes referred to as "industrial" or "heavy denier" PET, are used in tire cord, seat belts, and the like.

PET is used extensively in the manufacture of synthetic fibers (i. e., polyester fibers), which compose the largest segment of the synthetic fiber industry. Since it is a pure and regulated material meeting FDA food contact requirements, PET is also widely used in food packaging, such as beverage bottles and frozen food trays that can be heated in a microwave or conventional oven. PET bottles are used for a variety of foods and beverages, including alcohol, salad dressing, mouthwash, syrups, peanut butter, and pickled food. Containers made of PET are being used for toiletries, cosmetics, and household and pharmaceutical products (e. g., toothpaste pumps). Other applications of PET include molding resins, X-ray and other photographic films, magnetic tape, electrical insulation, printing sheets, and food packaging film.

6.6.2.2 Process Description[3-15]

PET resins are produced commercially from ethylene glycol (EG) and either dimethyl terephthalate (DMT) or terephthalic acid (TPA). DMT and TPA are solids. DMT has a melting point of 140°C (284°F), while TPA sublimes (goes directly from the solid phase to the gaseous phase). Both processes first produce the intermediate bis-(2-hydroxyethyl)-terephthalate (BHET) monomer and either methanol (DMT process) or water (TPA process). The BHET monomer is then polymerized under reduced pressure with heat and catalyst to produce PET resins. The primary reaction for the DMT process is:

$$\underset{\text{DMT}}{CH_3OOC\langle\bigcirc\rangle COOCH_3} + \underset{\text{EG}}{HOCH_2CH_2OH} \rightarrow \underset{\text{PET}}{HO\text{-}(OC\langle\bigcirc\rangle COOCH_2CH_2O)_nH} + 2nCH_3OH$$

The primary reaction for the TPA process is:

$$\underset{\text{TPA}}{HOOC\langle\bigcirc\rangle COOH} + \underset{\text{EG}}{HOCH_2CH_2OH} \rightarrow \underset{\text{PET}}{HO\text{-}(OC\langle\bigcirc\rangle COOCH_2CH_2O)_nH} + 2nH_2O$$

Both processes can produce low- and high-viscosity PET. Intrinsic viscosity is determined by the high polymerizer operating conditions of: (1) vacuum level, (2) temperature, (3) residence time, and (4) agitation (mechanical design).

The DMT process is the older of the two processes. Polymerization grade TPA has been available only since 1963. The production of methanol in the DMT process creates the need for methanol recovery and purification operations. In addition, this methanol can produce major VOC emissions. To avoid the need to recover and purify the methanol and to eliminate the potential VOC emissions, newer plants tend to use the TPA process.

DMT Process -

Both batch and continuous operations are used to produce PET using DMT. There are three basic differences between the batch process and continuous process: (1) a column-type reactor replaces the kettle reactor for esterification (ester exchange between DMT and ethylene glycol), (2) "no-back-mix" (i. e., no stirred tank) reactor designs are required in the continuous operation, and (3) different additives and catalysts are required to ensure proper product characteristics (e. g., molecular weight, molecular weight distribution).

Figure 6.6.2-1 is a schematic representation of the PET/DMT continuous process, and the numbers and letters following refer to this figure. Ethylene glycol is drawn from raw material storage (1) and fed to a mix tank (2), where catalysts and additives are mixed in. From the mix tank, the mixture is fed, along with DMT, to the esterifiers, also known as ester exchange reactors (3). About 0.6 pounds (lb) of ethylene glycol and 1.0 lb of DMT are used for each pound of PET product. In the esterifiers, the first reaction step occurs at an elevated temperature (between 170 and 230°C [338 and 446°F]) and at or above atmospheric pressure. This reaction produces the intermediate BHET monomer and the byproduct methanol. The methanol vapor must be removed from the esterifiers to shift the conversion to produce more BHET.

The vent from the esterifiers is fed to the methanol recovery system (11), which separates the methanol by distillation in a methanol column. The recovered methanol is then sent to storage (12). Vapor from the top of the methanol column is sent to a cold water (or refrigerated) condenser, where the condensate returns to the methanol column, and noncondensables are purged with nitrogen before being emitted to the atmosphere. The bottom product of methanol column, mostly ethylene glycol from the column's reboiler, is reused.

The BHET monomer, with other esterifier products, is fed to a prepolymerization reactor (4) where the temperature is increased to 230 to 285°C (446 to 545°F), and the pressure is reduced to between 1 and 760 millimeters (mm) of mercury (Hg) (typically, 100 to 200 mm Hg). At these operating conditions, residual methanol and ethylene glycol are vaporized, and the reaction that produces PET resin starts.

Product from the prepolymerizer is fed to one or more polymerization reactors (5), in series. In the polymerization reactors, sometimes referred to as end finishers, the temperature is further increased to 260 to 300°C (500 to 572°F). The pressure is further reduced (e. g., to an absolute pressure of 4 to 5 mm Hg). The final temperature and pressure depend on whether low- or high-viscosity PET is being produced. For high-viscosity PET, the pressure in the final (or second) end finisher is less than 2 mm Hg. With high-viscosity PET, more process vessels are used than low-viscosity PET to achieve the higher temperatures and lower pressures needed.

The vapor (ethylene glycol, methanol, and other trace hydrocarbons from the prepolymerization and polymerization reactors) typically is evacuated through scrubbers (spray condensers) using spent ethylene glycol. The recovered ethylene glycol is recirculated in the scrubber system, and part of the spent ethylene glycol from the scrubber system is sent to storage in process tanks (13), after which it is sent to the ethylene glycol recovery system (14).

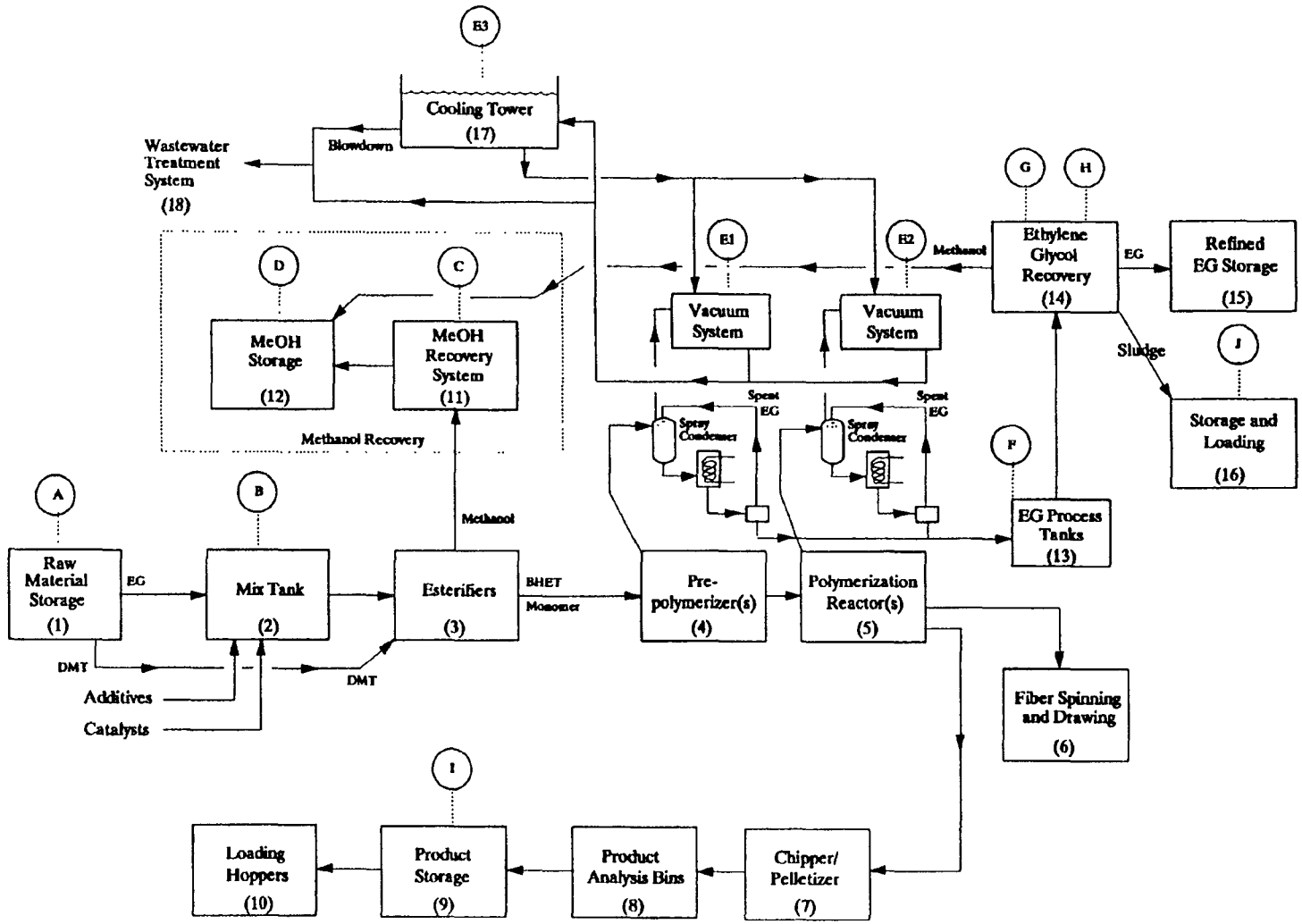

Figure 6.6.2-1. Simplified flow diagram of PET/DMT continuous process.

The ethylene glycol recovery system (14) usually is a distillation system composed of a low boiler column, a refining column, and associated equipment. In such a system, the ethylene glycol condensate is fed to the low boiler column. The top product from this column is sent to a condenser, where methanol is condensed and sent to methanol storage. The noncondensable vent (from the low boiler condenser) is purged with nitrogen and sent to the atmosphere (Stream G in the flow diagram). The bottom product of the low boiler column goes to its reboiler, with the vapor recycled back to the low boiler column and the underflow sent to the refining column. The refining column is under vacuum and is evacuated to the atmosphere. Top product from the refining column goes through a condenser, and the condensate is collected in a reflux tank. Part of the ethylene glycol condensate returns to the refining column. The remaining liquid goes to refined ethylene glycol storage (15). The reflux tank is purged with nitrogen. (The purge gas vented to the atmosphere from the reflux tank consists of only nitrogen.) The bottom product of the refining column goes to a reboiler, vapor returns to the column, and what remains is a sludge byproduct (16).

The vacuum conditions in the prepolymerization and polymerization reactors are created by means of multistage steam jet ejector (venturi) systems. The vacuum system typically is composed of a series of steam jets, with condensers on the discharge side of the steam jet to cool the jets and to condense the steam. The condensed steam from the vacuum jets and the evacuated vapors are combined with the cooling water during the condensation process. This stream exiting the vacuum system goes either to a cooling tower (17), where the water is cooled and then recirculated through the vacuum system, or to a waste water treatment plant (once-through system) (18).

Product from the polymerization reactor (referred to as the polymer melt) may be sent directly to fiber spinning and drawing operations (6). Alternatively, the polymer melt may be chipped or pelletized (7), put into product analysis bins (8), and then sent to product storage (9) before being loaded into hoppers (10) for shipment to the customer.

TPA Process -

Figure 6.6.2-2 is a schematic diagram of a continuous PET/TPA process, and the numbers and letters following refer to this figure. Raw materials are brought on site and stored (1). Terephthalic acid, in powder form, may be stored in silos. The ethylene glycol is stored in tanks. The terephthalic acid and ethylene glycol, containing catalysts, are mixed in a tank (2) to form a paste. In the mix tank, ethylene glycol flows into a manifold that sprays the glycol through many small slots around the periphery of the vent line. The terephthalic acid and ethylene glycol are mixed by kneading elements working in opposite directions. Combining these materials into a paste is a simple means of introducing them to the process, allowing more accurate control of the feed rates to the esterification vessels. A portion of the paste is recycled to the mix tank. This paste recycle and feed rates of TPA and ethylene glycol are used to maintain an optimum paste density or weight percent of terephthalic acid.

The paste from the mix tanks is fed, using gear pumps to meter the flow, to a series of esterification vessels (referred to as esterifiers, or ester exchange reactors). Two or more esterifiers may be used. Residence time is controlled by valves in the transfer lines between each vessel. These esterifiers are closed, pressurized reactors. Pressure and temperature operating conditions in the primary esterifier (3) are between 30 and 50 pounds per square inch gauge (psig) and 230 to 260°C (446 to 500°F), respectively. Vapors, primarily water (steam) and glycol, are vented to a reflux column or distillation column. A heat exchanger cools the vapors. Recovered glycol is returned to the primary esterifier. The water vapor is condensed using 29°C (85°F) cooling water in a shell-and-tube condenser and then is discharged to the waste water treatment system. The monomer formed in the primary esterifier and the remaining reactants are pumped to the secondary esterifier.

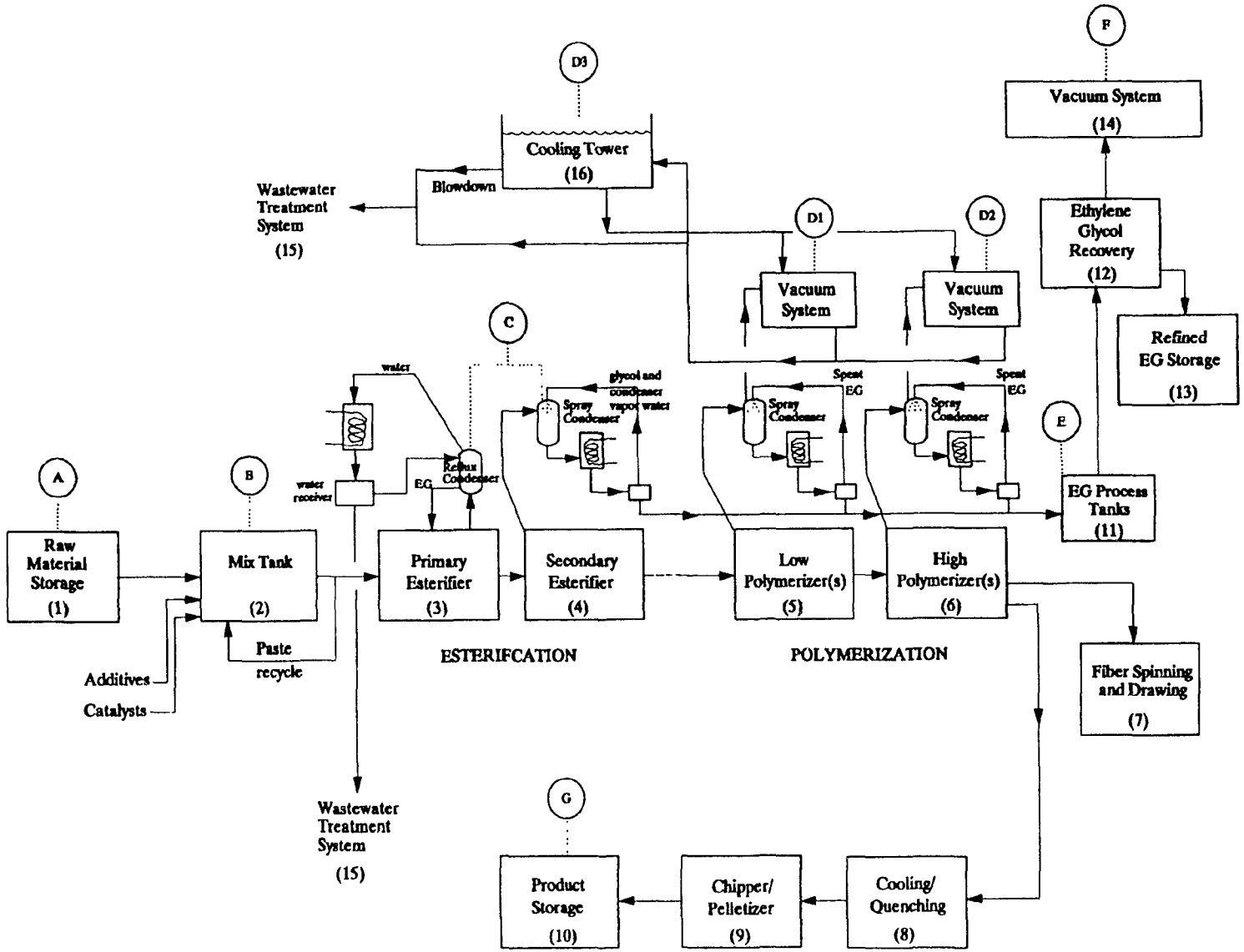

Figure 6.6.2-2. Simplified flow diagram of PET/TPA continuous process.

The secondary esterifier (4) is operated at atmospheric pressure and at a temperature of 250 to 270°C (482 to 518°F). The vapors from the secondary esterifier, primarily water vapor, are vented to a spray condenser, and this condensate is sent to a central ethylene glycol recovery unit (12). The condensate water is cooled by cooling water in a shell-and-tube heat exchanger and then recycled.

At one plant, the secondary esterifiers for the staple PET lines have a manhole (or rotary valve on some lines) through which chips and reworked yarn pellets are recycled. These manholes are not present on the secondary esterifiers for the industrial PET lines. Water vapor and monomer are emitted from the manholes, and the monomer sublimates on piping near the manhole.

Monomer (BHET) from the secondary esterifier is then pumped to the polymerization reactors. The number of reactors and their operating conditions depends on the type of PET being produced. Typically, there will be at least two polymerization reaction vessels in series, an initial (low) polymerizer and a final (high) polymerizer. The former is sometimes referred to as a prepolymerizer or a prepolycondensation reactor. The latter is sometimes called an end finisher. In producing high-viscosity PET, a second end finisher is sometimes used.

In the initial (low) polymerizer (5), esterification is completed and polymerization occurs (i. e., the joining of short molecular chains). Polymerization is "encouraged" by the removal of ethylene glycol. This reactor is operated under pressures of 20 to 40 mm Hg and at 270 to 290°C (518 to 554°F) for staple (low-viscosity) PET, and 10 to 20 mm Hg and 280 to 300°C (536 to 572°F) for industrial filament PET. The latter conditions produce a longer molecule, with the greater intrinsic viscosity and tenacity required in industrial fibers. Glycol released in the polymerization process and any excess or unreacted glycol are drawn into a contact spray condenser (scrubber) countercurrent to a spent ethylene glycol spray. (At one facility, both the low and high polymerizer spray condensers have four spray nozzles, with rods to clear blockage by solidified polymer. Care is taken to ensure that the spray pattern and flow are maintained.) Recovered glycol is pumped to a central glycol recovery unit, a distillation column. Vacuum on the reactors is maintained by a series of steam jets with barometric intercondensers. At one plant, a two-stage steam ejector system with a barometric intercondenser is used to evacuate the low polymerizer. The condensate from the intercondensers and the last steam jets is discharged to an open recirculating water system, which includes an open trough (referred to as a "hot well") and cooling tower. The recirculation system supplies cooling water to the intercondensers.

In the production of high-viscosity PET, the polymer from the low polymerizer is pumped to a high polymerizer vessel (6). In the high polymerizer, the short polymer chains formed in the low polymerizer are lengthened. Rotating wheels within these vessels are used to create large surface exposure for the polymer to facilitate removal of ethylene glycol produced by the interchange reaction between the glycol ester ends. The high polymerizer is operated at a low absolute pressure (high vacuum), 0.1 to 1.0 mm Hg, and at about 280 to 300°C (536 to 572°F). Vapors evolved in the high polymerizer, including glycol, are drawn through a glycol spray condenser. If very "hard" vacuums are drawn (e. g., 0.25 mm Hg), such spray condensers are very difficult, if not impossible, to use. At least one facility does not use any spray condensers off the polymerizers (low and high). Recovered glycol is collected in a receiver and is pumped to a central ethylene glycol recovery unit. At one plant, chilled water between -3.9 and 1.7°C (25 and 35°F) is used on the heat exchanger associated with the high polymerizer spray condenser.

At least one facility uses two high polymerizers (end finishers) to produce high-viscosity PET. At this plant, the first end finisher is usually operated with an intermediate vacuum level of about 2 mm Hg. The polymer leaving this reactor then enters a second end finisher, which may have a vacuum level as low as 0.25 mm Hg.

Vapors from the spray condenser off the high polymerizers are also drawn through a steam jet ejector system. One facility uses a five-jet system. After the first three ejectors, there is a barometric intercondenser. Another barometric intercondenser is located between the fourth and fifth ejectors. The ejectors discharge to the cooling water hot well. The stream exiting the vacuum system is sent either to a cooling tower (16) where the water is recirculated through the vacuum system, or to a waste water treatment plant (once-through system) (15).

Vacuum pumps were installed at one plant as an alternative to the last two ejectors. These pumps were installed as part of an energy conservation program and are used at the operator's discretion. The vacuum pumps are operated about 50 percent of the time. The vacuum system was designed for a maximum vapor load of about 10 kilograms per hour (kg/hr). If vacuum is lost, or is insufficient in the low or high polymerizers, off-specification product results. Each process line has a dual vacuum system. One five-stage ejector/vacuum pump system is maintained as a standby for each industrial filament (high-viscosity) process line. The staple (low-viscosity) lines have a standby ejector system, but with only one vacuum pump per process line. Steam ejectors reportedly recover faster from a slug of liquid carryover than do vacuum pumps, but the spare system is used in the production of either high- or low-viscosity PET.

At many facilities, molten PET from the high polymerizer is pumped at high pressure directly through an extruder spinerette, forming polyester filaments (7). The filaments are air cooled and then either cut into staple or wound onto spools. Molten PET can also be pumped out to form blocks as it cools and solidifies (8), which are then cut into chips or are pelletized (9). The chips or pellets are stored (10) before being shipped to the customer, where they are remelted for end-product fabrication.

Ethylene glycol recovery (12) generally involves a system similar to that of the DMT process. The major difference is the lack of a methanol recovery step. At least one TPA facility has a very different process for ethylene glycol recovery. At this plant, ethylene glycol emissions from the low and high polymerizers are allowed to pass directly to the vacuum system and into the cooling tower. The ethylene glycol is then recovered from the water in the cooling tower. This arrangement allows for a higher ethylene glycol concentration in the cooling tower.

6.6.2.3 Emissions And Controls[3,5,11,13,16-21]

Table 6.6.2-1 shows the VOC and particulate emissions for the PET/DMT continuous process, with similar levels expected for batch processes. The extensive use of spray condensers and other ethylene glycol and methanol recovery systems is economically essential to PET production, and these are not generally considered "controls".

Total VOC emissions will depend greatly on the type of system used to recover the ethylene glycol from the prepolymerizers and polymerization reactors, which give rise to emission streams E1, E2, E3, F, G, H, and J. The emission streams from the prepolymerizers and polymerization reactors are primarily ethylene glycol, with small amounts of methanol vapors and volatile impurities in the raw materials. Of these emission streams, the greatest emission potential is from the cooling tower (Stream E3). The amount of emissions from the cooling tower depends on a number of factors, including ethylene glycol concentration and windage rate. The ethylene glycol concentration depends on a number of factors, including use of spray condensers off the polymerization vessels, circulation rate of the cooling water in the cooling tower, blowdown rate (the rate are which water is drawn out of the cooling tower), and sources of water to cooling tower (e. g., dedicated cooling tower versus plant-side cooling tower).

Table 6.6.2-1 (Metric Units). EMISSION FACTORS FOR PET/DMT PROCESS[a]

Stream Identification	Emission Stream	Nonmethane VOC[b]	Particulate	EMISSION FACTOR RATING	References
A	Raw material storage	0.1	0.165[c]	C	17
B	Mix tanks	negligible[d]	ND	C	13
C	Methanol recovery system	0.3[e]	ND	C	3, 17
D	Recovered methanol storage	0.09[f]	ND	C	3, 17
E	Polymerization reaction				
E1	Prepolymerizer vacuum system	0.009	ND	C	17
E2	Polymerization reactor vacuum system	0.005	ND	C	17
E3	Cooling tower[g]	0.2 3.4	ND	C	18 - 19
F	Ethylene glycol process tanks	0.0009	ND	C	17
G	Ethylene glycol recovery condenser	0.01	ND	C	17
H	Ethylene glycol recovery vacuum system	0.0005	ND	C	17
I	Product storage	ND	0.0003[h]	C	17
J	Sludge storage and loading	0.02	ND	C	17
Total Plant		0.73[j] 3.9[k]	0.17		

[a] Stream identification refers to Figure 6.6.2-1. Units are grams per kilogram of product. ND = no data.

[b] Rates reflect extensive use of condensers and other recovery equipment as part of normal industry economical practice.

[c] From storage of DMT.

[d] Assumed same as for TPA process.

[e] Reference 3. For batch PET production process, estimated to be 0.15 grams VOC per kilogram of product.

[f] Reflects control by refrigerated condensers.

[g] Based on ethylene glycol concentrations at two PET/TPA plants. The lower estimate reflects emissions where spray condensers are used off the prepolymerizers and the polymerization reactors. The higher estimate reflects emissions where spray condensers are not used off the prepolymerizers and the polymerization reactors. A site-specific calculation is highly recommended for all cooling towers, because of the many variables. The following equation may be used to estimate windage emissions from cooling towers:

$$E = [EG_{wt\%} \times CT_{cr} \times 60 \times WR] \times [(4.2 \times EG_{wt\%}) + (3.78 \times H_2O_{wt\%})]$$

Table 6.6.2-1 (cont.).

where:

E = Mass of VOC emitted (kilograms per hour)
$EG_{wt\%}$ = Concentration of ethylene glycol, weight percent (fraction)
60 = Minutes per hour
CT_{cr} = Cooling tower circulation rate, gallons per minute
WR = Windage rate, fraction
4.2 = Density of ethylene glycol (kilograms per gallon)
3.78 = Density of water (kilograms per gallon)
$H_2O_{wt\%}$ = Concentration of water, weight percent (fraction)

Example: The VOC emissions from a cooling tower with an ethylene glycol concentration of 8.95% by weight, a water concentration of 91.05% by weight, a cooling tower circulation rate of 1270 gallons per minute, and a windage rate of 0.03% are estimated to be:

$$E = [0.0895 \times 1270 \times 60 \times 0.0003] \times [(4.2 \times 0.0895) + (3.78 \times 0.9105)]$$

$$= 7.8 \text{ kilograms per hour}$$

[h] Emission rate is for "controlled" emissions. Without controls, the estimated emission rate is 0.4 grams per kilogram of product.
[j] With spray condensers off all prepolymerizers and the polymerization reactors.
[k] With no spray condensers off all prepolymerizers and the polymerization reactors.

Most plants recover the ethylene glycol by using a spent ethylene glycol spray scrubber condenser directly off these process vessels and before the stream passes through the vacuum system. The condensed ethylene glycol may then be recovered through distillation. This type of recovery system results in relatively low concentrations of ethylene glycol in the cooling water at the tower, which in turn lowers emission rates for the cooling tower and the process as a whole. At one PET/TPA plant, a typical average concentration of about 0.32 weight percent ethylene glycol was reported, from which an emission rate of 0.2 grams VOC per kilogram (gVOC/kg) of product was calculated.

Alternatively, a plant may send the emission stream directly through the vacuum system (typically steam ejectors) without using spent ethylene glycol spray condensers. The steam ejectors used to produce a vacuum will produce contaminated water, which is then cooled for reuse. In this system, ethylene glycol is recovered from the water in the cooling tower by drawing off water from the tower (blowdown) and sending the blowdown to distillation columns. This method of recovering ethylene glycol can result in much higher concentrations of ethylene glycol in the cooling tower than when the ethylene glycol is recovered with spray condensers directly off the process vessels. (The actual concentration of ethylene glycol in the cooling water depends, in part, on the blowdown rate.) Higher concentrations in the cooling tower result in greater ethylene glycol emissions from the cooling tower and, in turn, from the process as a whole. At one PET/TPA plant recovering the ethylene glycol from the cooling tower, emissions from the cooling tower were approximately 3.4 gVOC/kg of product.

Next to the cooling tower, the next largest potential emission source in the PET/DMT process is the methanol recovery system. Methanol recovery system emissions (Stream C) from a plant using a continuous process are estimated to be approximately 0.3 gVOC/kg of product and about 0.09 gVOC/kg of product from the recovered methanol storage tanks. The emissions from the methanol recovery system (Stream C) for a batch process were reported to be 0.15 gVOC/kg of product, and typically are methanol and nitrogen.

The other emission streams related to the prepolymerizer and polymerization reactors are collectively relatively small, being about 0.04 gVOC/kg of product. VOC emissions from raw material storage (mostly ethylene glycol) are estimated to be about 0.1 gVOC/kg of product. Fixed roof storage tanks (ethylene glycol) and bins (DMT) are used throughout the industry. Emissions are vapors of ethylene glycol and DMT result from vapor displacement and tank breathing. Emissions from the mix tank are believed to be negligible.

Particulate emissions occur from storage of both raw material (DMT) and end product. Those from product storage may be controlled before release to the atmosphere. Uncontrolled particulate emissions from raw material storage are estimated to be approximately 0.17 g/kg of product. Particulate emissions from product storage are estimated to be approximately 0.0003 g/kg of product after control and approximately 0.4 g/kg of product before control.

Total VOC emissions from a PET/DMT continuous process are approximately 0.74 gVOC/kg of product if spray condensers are used off all of the prepolymerizers and polymerization reaction vessels. For a batch process, this total decreases to approximately 0.59 gVOC/kg of product. If spray condensers are not used, the ethylene glycol concentration in the cooling tower is expected to be higher, and total VOC emissions will be greater. Calculation of cooling tower emissions for site-specific plants is recommended. Total particulate emissions are approximately 0.17 g/kg of product, if product storage emissions are controlled.

Table 6.6.2-2 summarizes VOC and particulate emissions for the PET/TPA continuous process, and similar emission levels are expected for PET/TPA batch processes. VOC emissions are generally "uncontrolled", in that the extensive use of spray condensers and other ethylene glycol recovery systems are essential to the economy of PET production.

Emissions from raw material storage include losses from the raw materials storage and transfer (e. g., ethylene glycol). Fixed roof storage tanks and bins with conservation vents are used throughout the process. The emissions, vapors of ethylene glycol, TPA, and TPA dust, are from working and breathing losses. The VOC emission estimate for raw materials storage is assumed to be the same as that for the PET/DMT process. No emission estimate was available for the storage and transfer of TPA.

VOC emissions from the mix tank are believed to be negligible. They are emitted at ambient temperatures through a vent line from the mixer.

VOC emissions from the esterifiers occur from the condensers/distillation columns on the esterifiers. Emissions, which consist primarily of steam and ethylene glycol vapors, with small amounts of feed impurities and volatile side reaction products, are estimated to be 0.04 gVOC/kg of product. Exit temperature is reported to be approximately 104°C (220°F). At least one plant controls the primary esterifier condenser vent with a second condenser. At this plant, emissions were 0.0008 gVOC/kg of product with the second condenser operating, and 0.037 gVOC/kg of product without the second condenser operating. The temperature for the emission stream from the second

Table 6.6.2-2 (Metric Units). EMISSION FACTORS FOR PET/TPA PROCESS[a]

Stream Identification	Emission Stream	Nonmethane VOC[b]	Particulate	EMISSION FACTOR RATING	References
A	Raw material storage	0.1[c]	ND	C	17
B	Mix tanks	negligible	ND	C	13
C	Esterification	0.04[d]	ND	A	20 - 21
D	Polymerization reaction				
D1	Prepolymerizer vacuum system	0.009[c]	ND	C	17
D2	Polymerization reactor vacuum system	0.005[c]	ND	C	17
D3	Cooling tower[e]	0.2 3.4	ND	C	18 - 19
E	Ethylene glycol process tanks	0.0009[c]	ND	C	17
F	Ethylene glycol recovery vacuum system	0.0005[c]	ND	C	17
G	Product storage	ND	0.0003[c,f]	C	17
Total Plant		0.36[g] 3.6[h]			

[a] Stream identification refers to Figure 6.6.2-2. Units are grams per kilogram of product. ND = no data.
[b] Rates reflect extensive use of condensers and other recovery equipment as part of normal industry economical practice.
[c] Assumed same as for DMT process.
[d] At least one plant controls the primary esterifier condenser vent with a second condenser. Emissions were 0.0008 grams VOC per kilogram of product with the second condenser operating, and 0.037 grams VOC per kilogram of product without the second condenser operating.
[e] Based on ethylene glycol concentrations at two PET/TPA plants. The lower estimate reflects emissions where spray condensers are used off the prepolymerizers and the polymerization reactors. The higher estimate reflects emissions where spray condensers are not used off the prepolymerizers and the polymerization reactors. It is highly recommended that a site-specific calculation be done for all cooling towers as many variables affect actual emissions. The equation found in footnote g for Table 6.6.2-1 may be used to estimate windage emissions from cooling towers.
[f] Reflects control of product storage emissions. Without controls, the estimated emission rate is 0.4 grams per kilogram of product.
[g] With spray condensers off all prepolymerizers and the polymerization reactors.
[h] With no use of spray condensers off all prepolymerizers and the polymerization reactors.

condenser was reported to be 27 to 38°C (80 to 100°F). The emissions from the second condenser were composed of di-iso-propyl amine (DIPA) and acetaldehyde, with small amounts of ethylene.

Emissions from the prepolymerizers and polymerization reaction vessels in both PET/TPA and PET/DMT processes should be very similar. The emissions were discussed earlier under the DMT process.

The estimates of VOC emissions from the ethylene glycol process tanks and the ethylene glycol recovery system, and of particulate emissions from product storage, are assumed to be the same as for the DMT process.

Total VOC emissions from the PET/TPA process are approximately 0.36 gVOC/kg of product if spray condensers are used with all of the prepolymerizers and polymerization reaction vessels. If spray condensers are not used with all of these process vessels, the concentration in the cooling tower can be expected to be higher, and total VOC emissions will be greater. For example, at one plant, emissions from the cooling tower were calculated to be approximately 3.4 gVOC/kg of product, resulting in a plantwide estimate of 3.6 gVOC/kg of product. Calculation of cooling tower emissions for site-specific plants is recommended. Excluding TPA particulate emissions (no estimate available), total particulate emissions are expected to be small.

References For Section 6.6.2

1. *Modern Plastics Encyclopedia, 1988*, McGraw Hill, New York, 1988.

2. *Standards Of Performance For New Stationary Sources; Polypropylene, Polyethylene, Polystyrene, And Poly(ethylene terephthalate)*, 55 FR 51039, December 11, 1990.

3. *Polymer Industry Ranking By VOC Emissions Reduction That Would Occur From New Source Performance Standards*, Pullman-Kellogg, Houston, TX, August 30, 1979.

4. Karel Verschueren, *Handbook Of Environmental Data On Organic Compounds*, Van Nostrand Reinhold Co., New York, NY, 1983.

5. *Final Trip Report To Tennessee Eastman Company's Polyester Plant, Kingsport, TN*, Energy And Environmental Analysis, Inc., Durham, NC, October 2, 1980.

6. Written communication from R. E. Lee, Tennessee Eastman Co., Kingsport, TN, to A. Limpiti, Energy And Environmental Analysis, Inc., Durham, NC, November 7, 1980.

7. Written communication from P. Meitner, E. I. duPont de Nemours and Company, Inc., Wilmington, DE, to Central Docket Section, U. S. Environmental Protection Agency, Washington, DC, February 8, 1988.

8. Written communication from P. Meitner, E. I. duPont de Nemours and Company, Inc., Wilmington, DE, to J. R. Farmer, U. S. Environmental Protection Agency, Research Triangle Park, NC, August 29, 1988.

9. *Final Trip To DuPont's Poly(ethylene terephthalate) Plant, Kinston, NC*, Pacific Environmental Services, Inc., Durham, NC, February 21, 1989.

10. Telephone communication between R. Purcell, Pacific Environmental Services, Inc., Durham, NC, and J. Henderson and L. Williams, E. I. duPont de Nemours and Company, Inc., Kinston, NC, December 1988.

11. *Final Trip Report To Fiber Industries Polyester Plant, Salisbury, NC*, Pacific Environmental Services, Inc., Durham, NC, September 29, 1982.

12. Written communication from D. V. Perry, Fiber Industries, Salisbury, NC, to K. Meardon, Pacific Environmental Services, Inc., Durham, NC, November 22, 1982.

13. Written communication from R. K. Smith, Allied Chemical, Moncure, NC, to D. R. Goodwin, U. S. Environmental Protection Agency, Research Triangle Park, NC, October 27, 1980.

14. *Final Trip Report To Monsanto's Polyester Plant, Decatur, Alabama*, Energy and Environmental Analysis, Durham, NC, August 27, 1980.

15. Written communication from R. K. Smith, Allied Fibers and Plastics, Moncure, NC, to J. R. Farmer, U. S. Environmental Protection Agency, Research Triangle Park, NC, April 15, 1982.

16. Written communication from D. Perry, Fiber Industries, Salisbury, NC, to K. Meardon, Pacific Environmental Services, Inc., Durham, NC, February 11, 1983.

17. Written communication from D. O. Quisenberry, Tennessee Eastman Company, Kingsport, TN, to S. Roy, U. S. Environmental Protection Agency, Research Triangle Park, NC, August 25, 1988.

18. K. Meardon, *"Revised Costs For PET Regulatory Alternatives"*, Docket No. A-82-19, Item II-B-90. U. S. EPA, Air Docket Section, Waterside Mall, 401 M Street, SW, Washington, DC, August 20, 1984.

19. Written communication from J. W. Torrance, Allied Fibers and Plastics, Petersburg, VA, to J. R. Farmer, U. S. Environmental Protection Agency, Research Triangle Park, NC, September 4, 1984.

20. Written communication from A. T. Roy, Allied-Signal, Petersburg, VA, to K. Meardon, Pacific Environmental Services, Inc., Durham, NC, August 18, 1989.

21. Telephone communication between K. Meardon, Pacific Environmental Services, Inc., Durham, NC, and A. Roy, Allied-Signal, Petersburg, VA, August 18, 1989.

6.6.3 Polystyrene[1-2]

6.6.3.1 General

Styrene readily polymerizes to polystyrene by a relatively conventional free radical chain mechanism. Either heat or initiators will begin the polymerization. Initiators thermally decompose, thereby forming active free radicals that are effective in starting the polymerization process. Typically initiators used in the suspension process include benzoyl peroxide and di-tert-butyl per-benzoate. Potassium persulfate is a typical initiator used in emulsion polymerizations. In the presence of inert materials, styrene monomer will react with itself to form a homopolymer. Styrene monomer will react with a variety of other monomers to form a number of copolymers.

Polystyrene is an odorless, tasteless, rigid thermoplastic. Pure polystyrene has the following structure.

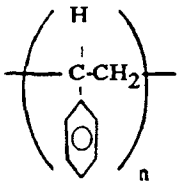

The homopolymers of styrene are also referred to as general purpose, or crystal, polystyrene. Because of the brittleness of crystal polystyrene, styrene is frequently polymerized in the presence of dissolved polybutadiene rubber to improve the strength of the polymer. Such modified polystyrene is called high-impact, or rubber-modified, polystyrene. The styrene content of high-impact polystyrene varies from about 88 to 97 percent. Where a blowing (or expanding) agent is added to the polystyrene, the product is referred to as an expandable polystyrene. The blowing agent may be added during the polymerization process (as in the production of expandable beads), or afterwards as part of the fabrication process (as in foamed polystyrene applications).

Polystyrene is the fourth largest thermoplastic by production volume. It is used in applications in the following major markets (listed in order of consumption): packaging, consumer/institutional goods, electrical/electronic goods, building/construction, furniture, industrial/machinery, and transportation.

Packaging applications using crystal polystyrene biaxial film include meat and vegetable trays, blister packs, and other packaging where transparency is required. Extruded polystyrene foam sheets are formed into egg carton containers, meat and poultry trays, and fast food containers requiring hot or cold insulation. Solid polystyrene sheets are formed into drinking cups and lids, and disposable packaging of edibles. Injection molded grades of polystyrene are used extensively in the manufacture of cosmetic and personal care containers, jewelry and photo equipment boxes, and photo film packages. Other formed polystyrene items include refrigerator door liners, audio and video cassettes, toys, flower pots, picture frames, kitchen utensils, television and radio cabinets, home smoke detectors, computer housings, and profile moldings in the construction/home-building industry.

6.6.3.2 General Purpose And High Impact Polystyrene[1-2]

Homopolymers and copolymers can be produced by bulk (or mass), solution (a modified bulk), suspension, or emulsion polymerization techniques. In solution (or modified bulk) polymerization, the reaction takes place as the monomer is dissolved in a small amount of solvent, such as ethylbenzene. Suspension polymerization takes place with the monomer suspended in a water phase. The bulk and solution polymerization processes are homogenous (taking place in one phase), whereas the suspension and emulsion polymerization processes are heterogeneous (taking place in more than one phase). The bulk (mass) process is the most widely used process for polystyrene today. The suspension process is also common, especially in the production of expandable beads. Use of the emulsion process for producing styrene homopolymer has decreased significantly since the mid-1940s.

6.6.3.2.1 Process Descriptions[1-3] -

Batch Process -

Various grades of polystyrene can be produced by a variety of batch processes. Batch processes generally have a high conversion efficiency, leaving only small amounts of unreacted styrene to be emitted should the reactor be purged or opened between batches. A typical plant will have multiple process trains, each usually capable of producing a variety of grades of polystyrene.

Figure 6.6.3-1 is a schematic representation of the polystyrene batch bulk polymerization process, and the following numbered steps refer to that figure. Pure styrene monomer (and comonomer, if a copolymer product is desired) is pumped from storage (1) to the feed dissolver (2). For the production of impact-grade polystyrene, chopped polybutadiene rubber is added to the feed dissolver, where it is dissolved in the hot styrene. The mixture is agitated for 4 to 8 hours to complete rubber dissolution. From the feed dissolver, the mixture usually is fed to an agitated tank (3), often a prepolymerization reactor, for mixing the reactants. Small amounts of mineral oil (as a lubricant and plasticizer), the dimer of alpha-methylstyrene (as a polymerization regulator), and an antioxidant are added. The blended or partially polymerized feed is then pumped into a batch reactor (4). During the reactor filling process, some styrene vaporizes and is vented through an overflow vent drum (5). When the reactor is charged, the vent and reactor are closed. The mixture in the reactor is heated to the reaction temperature to initiate (or continue) the polymerization. The reaction may also be begun by introducing a free radical initiator into the feed dissolver (2) along with other reactants. After polymerization is complete, the polymer melt (molten product) containing some unreacted styrene monomer, ethylbenzene (an impurity from the styrene feed), and low molecular weight polymers (dimers, trimers, and other oligomers), is pumped to a vacuum devolatilizer (6). Here, the residual styrene monomer, ethylbenzene, and the low molecular weight polymers are removed, condensed (7), passed through a devolatilizer condensate tank (9), and then sent to the byproduct recovery unit. Overhead vapors from the condenser are usually exhausted through a vacuum system (8). Molten polystyrene from the bottom of the devolatilizer, which may be heated to 250 to 280°C (482 to 536°F), is extruded (10) through a stranding die plate (a plate with numerous holes to form strands), and then immersed in a cold water bath. The cooled strands are pelletized (10) and sent to product storage (11).

Continuous Process -

As with the batch process, various continuous steps are used to make a variety of grades of polystyrene or copolymers of styrene. In continuous processes, the chemical reaction does not approach completion as efficiently as in batch processes. As a result, a lower percentage of styrene is converted to polystyrene, and larger amounts of unreacted styrene may be emitted from continuous

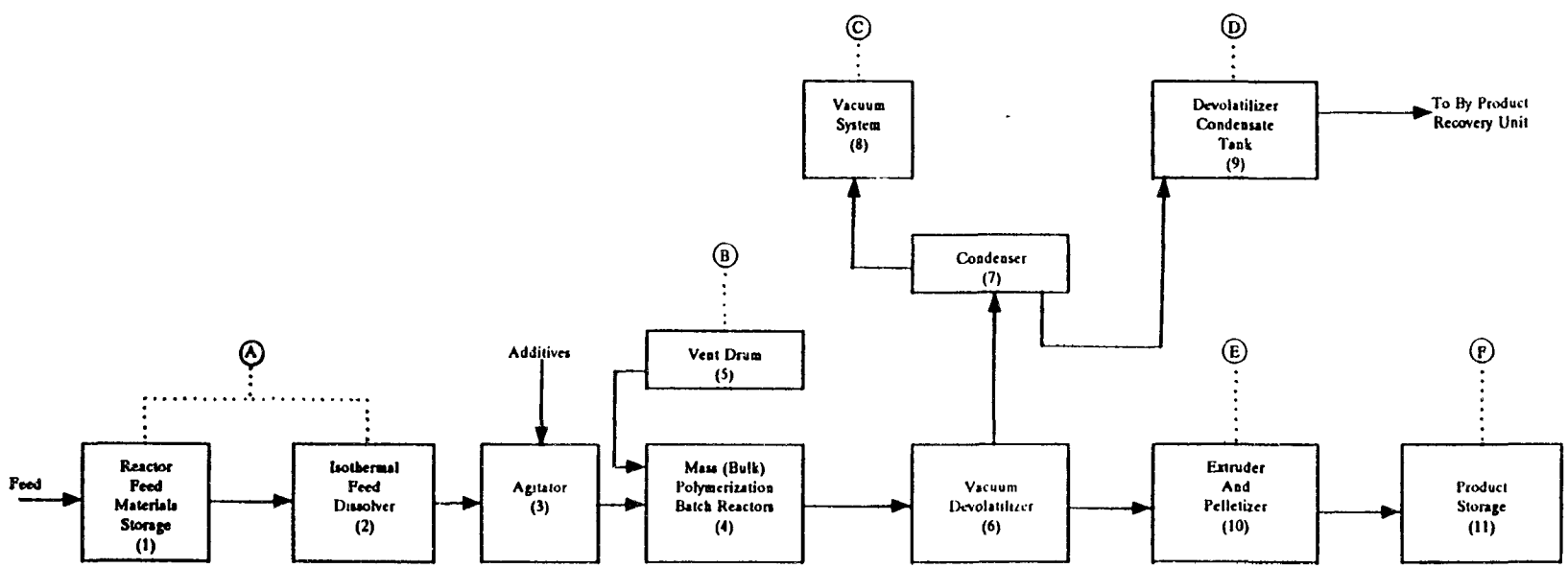

Figure 6.6.3-1. Simplified flow diagram of a batch polystyrene process.

process sources. A typical plant may contain more than one process line, producing either the same or different grades of polymer or copolymer.

A typical bulk (mass) continuous process is represented in Figure 6.6.3-2. Styrene, polybutadiene (if an impact-grade product is desired), mineral oil (lubricant and plasticizer), and small amounts of recycled polystyrene, antioxidants, and other additives are charged from storage (1) into the feed dissolver mixer (2) in proportions that vary according to the grade of resin to be produced. Blended feed is pumped continuously to the reactor system (3) where it is thermally polymerized to polystyrene. A process line usually employs more than one reactor in series. Some polymerization occurs in the initial reactor, often referred to as the prepolymerizer. Polymerization to successively higher levels occurs in subsequent reactors in the series, either stirred autoclaves or tower reactors. The polymer melt, which contains unreacted styrene monomer, ethylbenzene (an impurity from the styrene feed), and low molecular weight polymers, is pumped to a vacuum devolatilizer (4). Here, most of the monomer, ethylbenzene, and low molecular weight polymers are removed, condensed (5), and sent to the styrene recovery unit (8 and 9). Noncondensables (overhead vapors) from the condenser typically are exhausted through a vacuum pump (10). Molten polystyrene from the bottom of the devolatilizer is pumped by an extruder (6) through a stranding die plate into a cold water bath. The solidified strands are then pelletized (6) and sent to storage (7).

In the styrene recovery unit, the crude styrene monomer recovered from the condenser (5) is purified in a distillation column (8). The styrene overhead from the tower is condensed (9) and returned to the feed dissolver mixer. Noncondensables are vented through a vacuum system (11). Column bottoms containing low molecular weight polymers are used sometimes as a fuel supplement.

6.6.3.2.2 Emissions And Controls[3-9] -

As seen in Figure 6.6.3-1, six emission streams have been identified for batch processes: (1) the monomer storage and feed dissolver vent (Stream A); (2) the reactor vent drum vent (Stream B); (3) the devolatilizer condenser vent (Stream C); (4) the devolatilizer condensate tank (Stream D); (5) the extruder quench vent (Stream E); and (6) product storage emissions (Stream F). Table 6.6.3-1 summarizes the emission factors for these streams.

Table 6.6.3-1 (Metric Units). EMISSION FACTORS FOR BATCH PROCESS POLYSTYRENE[a]

EMISSION FACTOR RATING: C

Stream Identification	Emission Stream	Nonmethane VOC	References
A	Monomer storage and feed dissolver tanks	0.09[b]	3
B	Reactor vent drum vent	0.12 - 1.35[c]	3 - 4
C	Devolatilizer condenser vent	0.25 - 0.75[c]	3 - 4
D	Devolatilizer condensate tank	0.002[b]	3
E	Extruder quench vent	0.15 - 0.3[c]	3 - 4
F	Product storage	negligible	3
Total Plant		0.6 - 2.5	

[a] Stream identification refers to Figure 6.6.3-1. Units are grams VOC per kilogram of product.
[b] Based on fixed roof design.
[c] Reference 4. The higher factors are more likely during the manufacture of lower molecular weight products. Factor for any given process train will change with product grade.

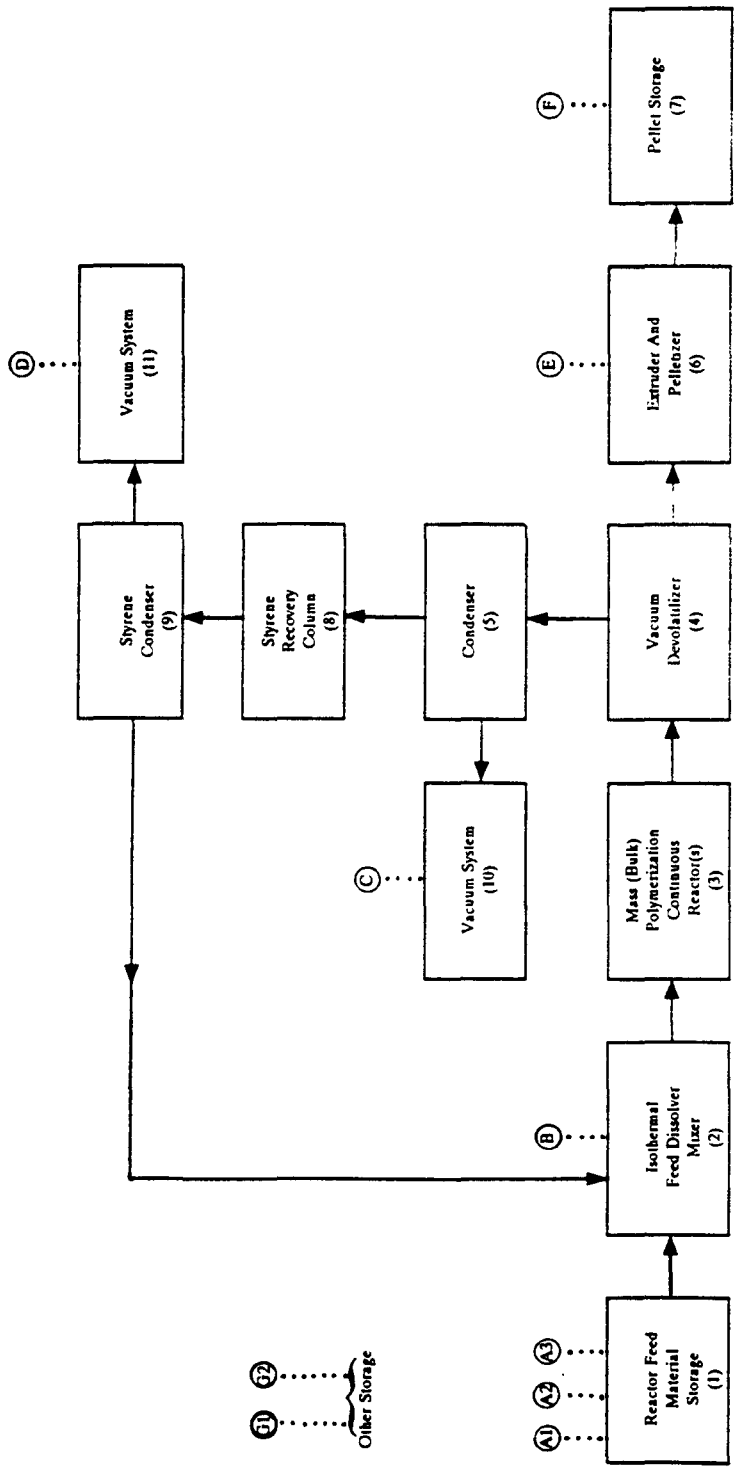

Figure 6.6.3-2. Simplified flow diagram of a continuous polystyrene process.

The major vent is the devolatilizer condenser vent (Stream C). This continuous offgas vent emits 0.25 to 0.75 grams of VOC per kilogram (gVOC/kg) of product depending on the molecular weight of the polystyrene product being produced. The higher emission factor is more likely during the manufacture of lower molecular weight products. The emissions are unreacted styrene, which is flashed from the product polymer in the vacuum devolatilizer, and it is extremely diluted in air through leakage. The stream is exhausted through a vacuum system and then through an oil demister to the atmosphere. The oil demister is used primarily to separate out organic mist.

The second largest vent stream is likely to be the reactor vent drum vent, with an emission rate ranging from 0.12 to 1.35 gVOC/kg of product, this range also being associated with the molecular weight of the polystyrene product being produced. The higher emission factor is more likely during the manufacture of lower molecular weight products. These emissions, which are the only intermittent emissions from the process, occur only during reactor filling periods and they are vented to the atmosphere. The rate of 0.12 gVOC/kg of product is based on a facility having two batch reactors that are operated alternately on 24-hour cycles.

Stream E, the extruder quench vent, is the third largest emission stream, with an emission rate of 0.15 to 0.3 gVOC/kg of product. This stream, composed of styrene in water vapor, is formed when the hot, extruded polystyrene strands from the stranding die plate contact the cold water in the quenching bath. The resulting stream of steam with styrene is usually vented through a forced draft hood located over the water bath and then passed through a mist separator or electrostatic precipitator before venting to the atmosphere.

The other emission streams are relatively small continuous emissions. Streams A and D represent emissions from various types of tanks and dissolver tanks. Emissions from these streams are estimated, based on fixed roof tanks. Emissions from product storage, Stream F, have been reported to be negligible.

There are no VOC control devices typically used at polystyrene plants employing batch processes. The condenser (7) off the vacuum devolatilizer (6) typically is used for process reasons (recovery of unreacted styrene and other reactants). This condenser reduces VOC emissions, and its operating characteristics will affect the quantity of emissions associated with batch processes (Stream C in particular).

Total process uncontrolled emissions are estimated to range from 0.6 to 2.5 gVOC/kg of product. The higher emission rates are associated with the manufacture of lower molecular weight polystyrene. The emission factor for any given process line will change with changes in the grade of the polystyrene being produced.

Emission factors for the continuous polystyrene process are presented in Table 6.6.3-2, and the following numbered steps refer to Figure 6.6.3-2. Emissions from the continuous process are similar to those for the batch process, although the continuous process lacks a reactor vent drum. The emission streams, all of which are continuous, are: (1) various types of storage (Streams A and G); (2) the feed dissolver vent (Stream B); (3) the devolatilizer condenser vent (Stream C); (4) the styrene recovery unit condenser vent (Stream D); (5) the extruder quench vent (Stream E); and (6) product storage emissions (Stream F).

Industry's experience with continuous polystyrene plants indicates a wide range of emission rates from plant to plant depending in part on the type of vacuum system used. Two types are now used in the industry, one relying on steam ejectors and the other on vacuum pumps. Where steam ejectors are used, the overheads from the devolatilizer condenser vent and the styrene recovery unit

Table 6.6.3-2 (Metric Units). EMISSION FACTORS FOR CONTINUOUS PROCESS POLYSTYRENE[a]

EMISSION FACTOR RATING: C

Stream Identification	Emission Stream	Nonmethane VOC		References
		Uncontrolled	Controlled	
A1	Styrene monomer storage	0.08		3, 5
A2	Additives			
	General purpose	0.002		5
	High impact	0.001		5 - 6
A3	Ethylbenzene storage	0.001		5
B	Dissolvers	0.008		3, 5
C	Devolatilizer condenser vent[b]	0.05[c] 2.96[e]	0.04[d]	4 - 5, 7 3
D	Styrene recovery unit condenser vent	0.05[c] 0.13[e]		4, 7 3
C+D		0.024 - 0.3[f]	0.004[g]	5 - 6, 8
E	Extruder quench vent	0.01[c] 0.15[e,g,h]		4 3
F	Pellet storage	negligible		3
	Other storage			
G1	General purpose	0.008		3, 5
G2	High impact	0.007		3, 5
Total Plant		0.21[c] 3.34[e]		

[a] Stream identification refers to Figure 6.6.3-2. Units are grams VOC per kilogram of product.
[b] Reference 9. Larger plants may route this stream to the styrene recovery section. Smaller plants may find this too expensive.
[c] For plants using vacuum pumps.
[d] Condenser is used downstream of primary process condensers; includes emissions from dissolvers. Plant uses vacuum pumps.
[e] For plants using steam jets.
[f] Lower value based on facility using refrigerated condensers as well as conventional cooling water exchangers; vacuum pumps in use. Higher value for facility using vacuum pumps.
[g] Plant uses an organic scrubber to reduce emissions. Nonsoluble organics are burned as fuel.
[h] This factor may vary significantly depending on overall process. Reference 6 indicates an emission factor of 0.0012 gVOC/kg product at a plant whose process design is "intended to minimize emissions".

condenser vent are composed mainly of steam. Some companies have recently replaced these steam ejectors with mechanical vacuum pumps. Emissions from vacuum pumps usually are lower than from steam ejectors.

It is estimated that the typical total VOC emission rate for plants using steam ejectors is about 3.34 gVOC/kg of product, with the largest emission stream being the devolatilizer condenser vent (2.96 gVOC/kg of product). Emissions from the styrene recovery unit condenser vent and the extruder quench vent are estimated to be 0.13 and 0.15 gVOC/kg of product, respectively, although the latter may vary significantly depending on overall plant design. One plant designed to minimize emissions reported an emission factor of 0.0012 gVOC/kg product for the extruder quench vent.

For plants using vacuum pumps, it is estimated that the total VOC emission rate is about 0.21 gVOC/kg of product. In these plants, emissions from the devolatilizer condenser vent and the styrene recovery unit condenser vent are each estimated to be 0.05 gVOC/kg of product. Styrene monomer and other storage emissions can be the largest emission sources at such plants, approximately 0.1 gVOC/kg of product. Some plants combine emissions from the dissolvers with those from the devolatilizer condenser vent. Other plants may combine the dissolver, devolatilizer condenser vent, and styrene recovery unit condenser vent emissions. One plant uses an organic scrubber to reduce these emissions to 0.004 gVOC/kg of product.

Condensers are a critical, integral part of all continuous polystyrene processes. The amount of unreacted styrene recovered for reuse in the process can vary greatly, as condenser operating parameters vary from one plant to another. Lowering the coolant operating temperature will lower VOC emissions, all other things being equal.

Other than the VOC reduction achieved by the process condensers, most plants do not use VOC control devices. A plant having controls, however, can significantly reduce the level of VOC emissions. One company, for example, uses an organic scrubber to reduce VOC air emissions. Another uses a condenser downstream from the primary process condensers to control VOCs.

6.6.3.3 Expandable Polystyrene[1-2,10-11]

The suspension process is a batch polymerization process that may be used to produce crystal, impact, or expandable polystyrene beads. An expandable polystyrene (EPS) bead typically consists of high molecular weight crystal grade polystyrene (to produce the proper structure when the beads are expanded) with 5 to 8 percent being a low-boiling-point aliphatic hydrocarbon blowing agent dissolved in the polymer bead. The blowing agent typically is pentane or isopentane although others, such as esters, alcohols, and aldehydes, can be used. When used to produce an EPS bead, the suspension process can be adapted in one of two ways for the impregnation of the bead with the blowing agent. One method is to add the blowing agent to a reactor after polymerization, and the other is to add the blowing agent to the monomer before polymerization. The former method, called the "post-impregnation" suspension process, is more common than the latter, referred to as the "in-situ" suspension process. Both processes are described below.

EPS beads generally are processed in one of three ways, (1) gravity- or air-fed into closed molds, then heated to expand up to 50 times their original volume; (2) pre-expanded by heating and then molding in a separate processing operation; and (3) extruded into sheets. EPS beads are used to produce a number of foamed polystyrene materials. Extruded foam sheets are formed into egg cartons, meat and poultry trays, and fast food containers. In the building/construction industry, EPS board is used extensively as a low-temperature insulator.

6.6.3.3.1 Process Description[1,10-12] -

Post-impregnation Suspension Process -

This process is essentially a two-part process using two process lines in series. In the first process line, raw styrene monomer is polymerized and a finished polystyrene bead is produced. The second process line takes the finished bead from the first line, impregnates the bead with a blowing agent, and produces a finished EPS bead. Figure 6.6.3-3 is a schematic representation of this process.

In the first line, styrene monomer, water, initiator, and suspending agents form the basic charge to the suspension reactor (1). The styrene-to-water ratio varies with the type of polystyrene required. A typical ratio is about one-quarter to one-half monomer to water volume. Initiators are commonly used because the reaction temperature is usually too low for adequate thermal initiation of polymerization. Suspending agents are usually protective colloids and insoluble inorganic salts. Protective colloids are added to increase the viscosity of the continuous water phase, and insoluble inorganic salts such as magnesium carbonate ($MgCO_3$) are added to prevent coalescence of the drops upon collision.

In the reactor, the styrene is suspended, through use of mechanical agitation and suspending agents, in the form of droplets throughout the water phase. Droplet size may range from about 0.1 to 1.0 mm. The reactor is heated to start the polymerization, which takes place within the droplets. An inert gas, such as nitrogen, is frequently used as a blanketing agent in order to maintain a positive pressure at all times during the cycle to prevent air leaks. Once polymerization starts, temperature control is typically maintained through a water-cooled jacket around the reactor and is facilitated by the added heat capacity of the water in the reactor. The size of the product bead depends on both the strength of agitation and the nature of the monomer and suspending system. Between 20 and 70 percent conversion, agitation becomes extremely critical. If agitation weakens or stops between these limits, excessive agglomeration of the polymer particles may occur, followed by a runaway reaction. Polymerization typically occurs within several hours, the actual time varying largely with the temperature and with the amount and type of initiator(s) used. Residual styrene concentrations at the end of a run are frequently as low as 0.1 percent.

Once the reaction has been completed (essentially 100 percent conversion), the polystyrene-water slurry is normally pumped from the reactor to a hold tank (2), which has an agitator to maintain dispersion of the polymer particles. Hold tanks have at least three functions: (1) the polymer-water slurry is cooled to below the heat distortion temperature of the polymer (generally 50 to 60°C [122 to 140°F]); (2) chemicals are added to promote solubilization of the suspension agents; and (3) the tank serves as a storage tank until the slurry can be centrifuged. From the hold tanks, the polymer-water slurry is fed to a centrifuge (3) where the water and solids are separated. The solids are then washed with water, and the wash water is separated from the solids and is discarded. The polymer product beads, which may retain between 1 and 5 percent water, are sent to dryers (4). From the dryers, they may be sent to a classifier (5) to separate the beads according to size, and then to storage bins or tanks (6). Product beads do not always meet criteria for further processing into expandable beads, and "off-spec" beads may be processed and sold as crystal (or possibly impact) polystyrene.

In the second line, the product bead (from the storage bins of the first line), water, blowing agent (7), and any desired additives are added to an impregnation reactor (8). The beads are impregnated with the blowing agent through utilization of temperature and pressure. Upon

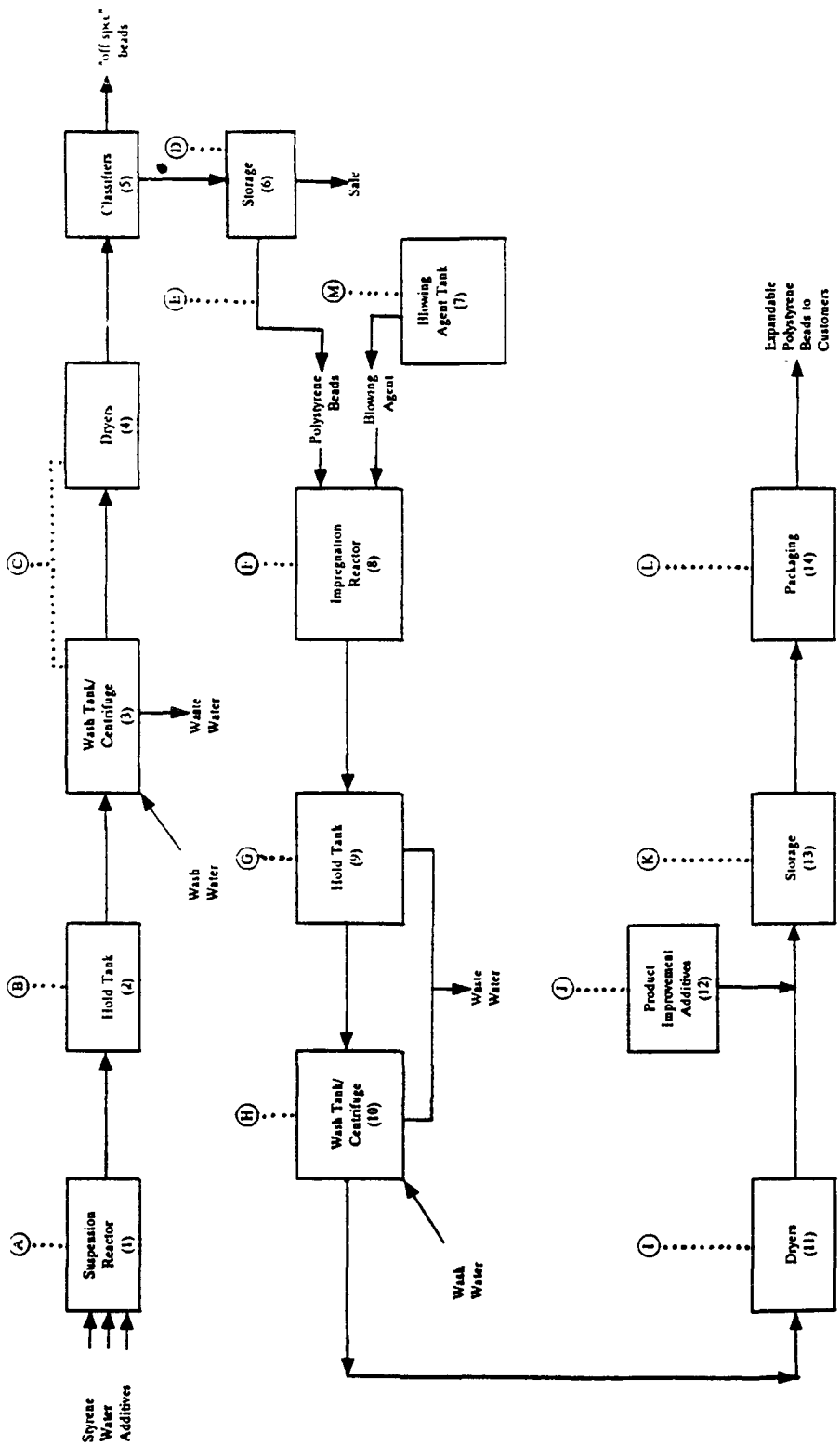

Figure 6.6.3-3. Simplified flow diagram of the expandable polystyrene post-impregnation suspension process.

completion of the impregnation process, the bead-water slurry is transferred to a hold tank (9) where acid may be added and part of the water is drained as waste water. From the hold tanks, the slurry is washed and dewatered in centrifuges (10) and then dried in low-temperature dryers (11). In some instances, additives (12) may be applied to the EPS bead to improve process characteristics. From the dryers, the EPS bead may undergo sizing, if not already done, before being transferred to storage silos (13) or directly to packaging (14) for shipment to the customer.

In-situ Suspension Process -

The in-situ suspension process is shown schematically in Figure 6.6.3-4. The major difference between this process and the post-impregnation suspension process is that polymerization and impregnation takes place at the same time in a single reactor. The reaction mixture from the mix tank (1), composed of styrene monomer, water, polymerization catalysts, and additives, are charged to a reactor (2) to which a blowing agent is added. The styrene monomer is polymerized at elevated temperatures and pressure in the presence of the blowing agent, so that 5 to 7 percent of the blowing agent is entrapped in the polymerized bead. After polymerization and impregnation have taken place, the EPS bead-water slurry follows essentially the same steps as in the post-impregnation suspension process. These steps are repeated in Figure 6.6.3-4.

6.6.3.3.2 Emissions And Controls[10,12-16] -

Emission rates have been determined from information on three plants using the post-impregnation suspension process. VOC emissions from this type of facility are generally uncontrolled. Two of these plants gave fairly extensive information and, of these, one reported an overall uncontrolled VOC emission rate of 9.8 g/kg of product. For the other, an overall uncontrolled VOC emission rate of 7.7 g/kg is indicated, by back-calculating two emission streams controlled by condensers.

The information on emission rates for individual streams varied greatly from plant to plant. For example, one plant reported a VOC emission rate for the suspension reactor of 0.027 g/kg of product, while another reported a rate of 1.9 g/kg of product. This inconsistency in emission rates may be because of differences in process reactors, operating temperatures, and/or reaction times, but sufficient data to determine this are not available. Therefore, individual stream emission rates for the post-impregnation process are not given here.

Particulate emissions (emissions of fines from dryers, storage, and pneumatic transfer of the polymer) usually are controlled by either cyclones alone or cyclones followed by baghouses. Overall, controlled particulate emissions are relatively small, approximately 0.18 g particulate/kg of product or less. Control efficiencies of 99 percent were indicated and, thus, uncontrolled particulate emissions might be around 18 g particulate/kg of product.

Table 6.6.3-3 summarizes uncontrolled VOC emissions factors for the in-situ process, based on a study of a single plant. An uncontrolled emission rate of about 5.4 gVOC/kg of product is estimated for this suspension EPS process. Most emission streams are uncontrolled at this plant. However, reactor emissions are vented to the boiler as primary fuel, and some of the dryer emissions are vented to the boiler as supplementary fuel, thereby resulting in some VOC control.

The blowing agent, which continually diffuses out of the bead both in manufacturing and during storage, constitutes almost all VOCs emitted from both processes. A small amount of styrene is emitted from the suspension reactors in the post-impregnation process and from the mix tanks and reactors in the in-situ process.

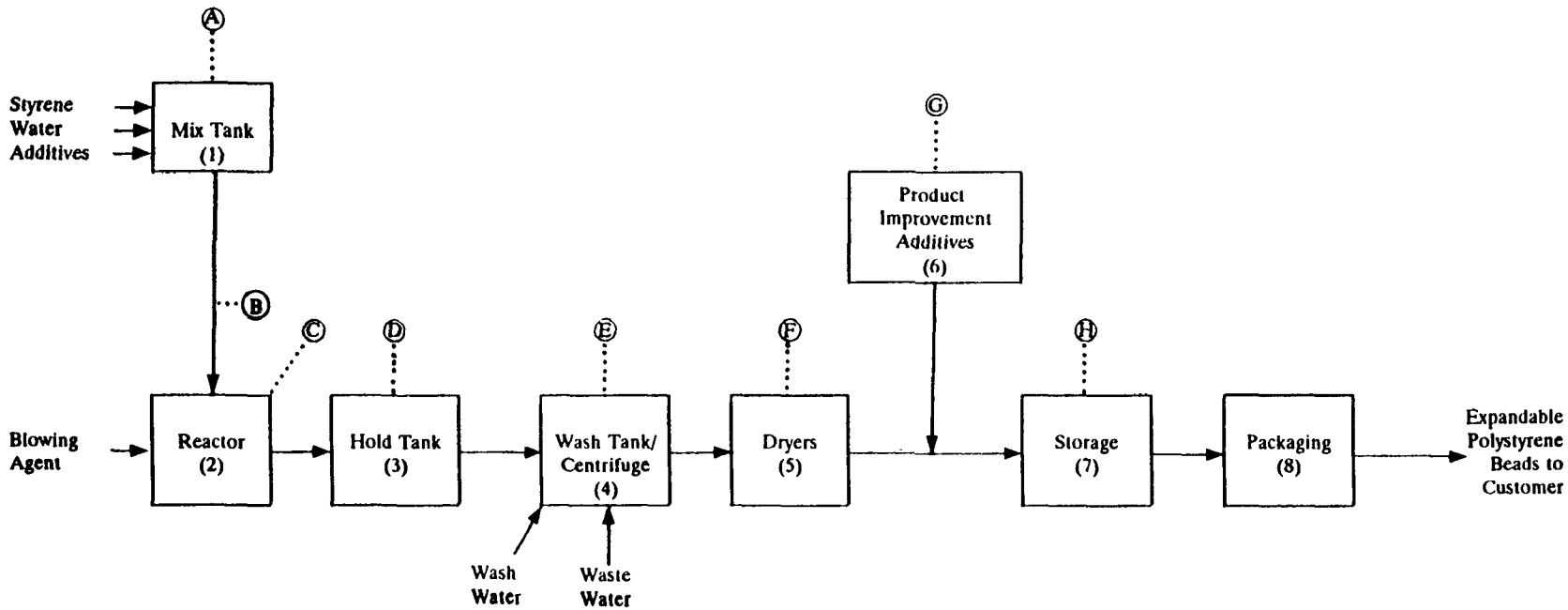

Figure 6.6.3-4. Simplified flow diagram of the expandable polystyrene in-situ suspension process.

Table 6.6.3-3 (Metric Units). EMISSION FACTORS FOR IN-SITU PROCESS EXPANDABLE POLYSTYRENE[a]

EMISSION FACTOR RATING: C

Stream Identification	Emission Stream	Nonmethane VOC	References
A	Mix tank vents	0.13	16
B	Regranulator hoppers	negligible	16
C	Reactor vents	1.09[b]	17
D	Holding tank vents	0.053	16
E	Wash tank vents	0.023	16
F	Dryer vents	2.77[b]	16
G	Product improvement vents	0.008	16
H	Storage vents and conveying losses	1.3	16
Total Plant		5.37[c]	

[a] Stream identification refers to Figure 6.6.3-4. Units are grams VOC per kilogram of product.
[b] Reference 16. All reactor vents and some dryer vents are controlled in a boiler. Rates are before control.
[c] At plant where all reactor vents and some dryer vents are controlled in a boiler (and assuming 99% reduction), an overall emission rate of 3.75 is estimated.

Because of the diffusing of the blowing agent, the EPS bead is unstable for long periods of time. Figure 6.6.3-5 shows the loss of blowing agent over time when beads are stored under standard conditions. This diffusion means that the stock of beads must be rotated. An up-to-date analysis of the blowing agent content of the bead (measured as percent volatiles at 100°C [212°F]) also needs to be maintained, because the blowing agent content determines processing characteristics, ultimate density, and economics. Expandable beads should be stored below 32°C (90°F) and in full containers (to reduce gas volume space).

Since pentane, a typical blowing agent, forms explosive mixtures, precautions must be taken whenever it is used. For example, after storage containers are opened, a time lag of 10 minutes is suggested to allow fumes or pentane vapors to dissipate out of the containers. Care must be taken to prevent static electricity and sparks from igniting the blowing agent vapors.

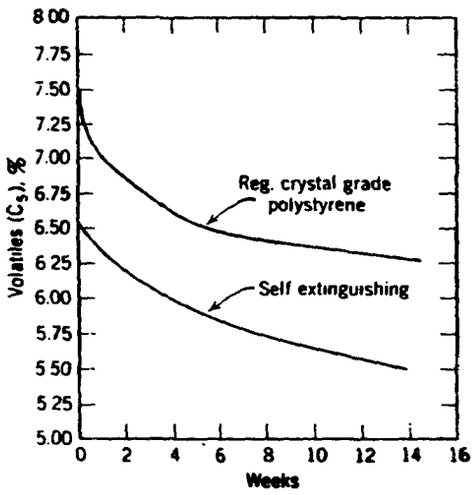

Figure 6.6.3-5. EPS beads stored in fiber drum at 21 - 24°C (70 - 75°F).

References For Section 6.6.3

1. L. F. Albright, *Processes For Major Addition-type Plastics And Their Monomers*, McGraw-Hill, New York, 1974.

2. *Modern Plastics Encyclopedia, 1981-1982*, McGraw Hill, New York, 1982.

3. Written communication from E. L. Bechstein, Pullman Kellogg, Houston, TX, to M. R. Clowers, U. S. Environmental Protection Agency, Research Triangle Park, NC, November 6, 1978.

4. Written communication from J. S. Matey, Chemical Manufacturers Association, Washington, DC, to E. J. Vincent, U. S. Environmental Protection Agency, Research Triangle Park, NC, October 19, 1981.

5. Written communication from P. R. Chaney, Mobil Chemical Company, Princeton, NJ, to J. R. Farmer, U. S. Environmental Protection Agency, Research Triangle Park, NC, October 13, 1988.

6. *Report Of Plant Visit To Monsanto Plastics And Resins Company, Port Plastics, OH*, Pacific Environmental Services, Inc., Durham, NC, September 15, 1982.

7. Written communication from R. Symuleski, Standard Oil Company (Indiana), Chicago, IL, to A. Limpiti, Energy And Environmental Analysis, Inc., Durham, NC, July 2, 1981.

8. Written communication from J. R. Strausser, Gulf Oil Chemicals Company, Houston, TX, to J. R. Farmer, U. S. Environmental Protection Agency, Research Triangle Park, NC, November 11, 1982.

9. Written communication from J. S. Matey, Chemical Manufacturers Association, Washington, DC, to C. R. Newman, Energy and Environmental Analysis, Inc., Durham, NC, May 5, 1981.

10. Calvin J. Benning, *Plastic Foams: The Physics And Chemistry Of Product Performance And Process Technology, Volume I: Chemistry And Physics Of Foam Formation*, John Wiley And Sons, New York, 1969.

11. S. L. Rosen, *Fundamental Principles Of Polymeric Materials*, John Wiley And Sons, New York, 1982.

12. Written communication from K. Fitzpatrick, ARCO Chemical Company, Monaca, PA, to D. R. Goodwin, U. S. Environmental Protection Agency, Research Triangle Park, NC, February 18, 1983.

13. Written communication from B. F. Rivers, American Hoechst Corporation, Leominster, MA, to J. R. Farmer, U. S. Environmental Protection Agency, Research Triangle Park, NC, May 4, 1983.

14. Written communication from B. F. Rivers, American Hoechst Corporation, Leominster, MA, to K. Meardon, Pacific Environmental Services, Inc., Durham, NC, July 20, 1983.

15. Written communication from T. M. Nairn, Cosden Oil And Chemical Company, Big Spring, TX, to J. R. Farmer, U. S. Environmental Protection Agency, Research Triangle Park, NC, March 30, 1983.

16. Written communication from A. D. Gillen, BASF Wyandotte Corporation, Parsippany, NJ, to J. R. Farmer, U. S. Environmental Protection Agency, Research Triangle Park, NC, February 18, 1983.

17. Telephone communication between K. Meardon, Pacific Environmental Services, Inc., Durham, NC, and A. Gillen, BASF Wyandotte Corporation, Parsippany, NJ, June 21, 1983.

6.6.4 Polypropylene

6.6.4.1 Process Description[1]

The manufacture of most resins or plastics begins with the polymerization or linking of the basic compound (monomer), usually a gas or liquid, into high molecular weight noncrystalline solids. The manufacture of the basic monomer is not considered part of the plastics industry and is usually accomplished at a chemical or petroleum plant.

The manufacture of most plastics involves an enclosed reaction or polymerization step, a drying step, and a final treating and forming step. These plastics are polymerized or otherwise combined in completely enclosed stainless steel or glass-lined vessels. Treatment of the resin after polymerization varies with the proposed use. Resins for moldings are dried and crushed or ground into molding powder. Resins such as the alkyd to be used for protective coatings are usually transferred to an agitated thinning tank, where they are thinned with some type of solvent and then stored in large steel tanks equipped with water-cooled condensers to prevent loss of solvent to the atmosphere. Still other resins are stored in latex form as they come from the kettle.

6.6.4.2 Emissions And Controls[1]

The major sources of air contamination in plastics manufacturing are the raw materials or monomers, solvents, or other volatile liquids emitted during the reaction; sublimed solids such as phthalic anhydride emitted in alkyd production, and solvents lost during storage and handling of thinned resins. Emission factors for the manufacture of polypropylene are shown in Table 6.6.4-1.

Table 6.6.4-1 (Metric And English Units). UNCONTROLLED EMISSION FACTORS FOR PLASTICS MANUFACTURING[a]

EMISSION FACTOR RATING: E

Type of Plastic	Particulate		Gases	
	kg/Mg	lb/ton	kg/Mg	lb/ton
Polypropylene	1.5	3	0.35[b]	0.7[b]

[a] References 2-3.
[b] As propylene.

Much of the control equipment used in this industry is a basic part of the system serving to recover a reactant or product. These controls include floating roof tanks or vapor recovery systems on volatile material, storage units, vapor recovery systems (adsorption or condensers), purge lines venting to a flare system, and vacuum exhaust line recovery systems.

References For Section 6.6.4

1. *Air Pollutant Emission Factors, Final Report*. Resources Research, Inc., Reston, VA, Prepared for National Air Pollution Control Administration, Durham, NC, under Contract Number CPA-22-69-119, April 1970.

2. Unpublished data. U. S. Department of Health and Human Services, National Air Pollution Control Administration, Durham, NC, 1969.

3. Communication between Resources Research, Inc., Reston, VA, and State Department of Health, Baltimore, MD, November 1969.

6.7 Printing Ink

6.7.1 Process Description[1]

There are 4 major classes of printing ink: letterpress and lithographic inks, commonly called oil or paste inks; and flexographic and rotogravure inks, which are referred to as solvent inks. These inks vary considerably in physical appearance, composition, method of application, and drying mechanism. Flexographic and rotogravure inks have many elements in common with the paste inks but differ in that they are of very low viscosity, and they almost always dry by evaporation of highly volatile solvents.[2]

There are 3 general processes in the manufacture of printing inks: (1) cooking the vehicle and adding dyes, (2) grinding of a pigment into the vehicle using a roller mill, and (3) replacing water in the wet pigment pulp by an ink vehicle (commonly known as the flushing process).[3] The ink "varnish" or vehicle is generally cooked in large kettles at 200 to 600°F (93 to 315°C) for an average of 8 to 12 hours in much the same way that regular varnish is made. Mixing of the pigment and vehicle is done in dough mixers or in large agitated tanks. Grinding is most often carried out in 3-roller or 5-roller horizontal or vertical mills.

6.7.2 Emissions And Controls[1,4]

Varnish or vehicle preparation by heating is by far the largest source of ink manufacturing emissions. Cooling the varnish components — resins, drying oils, petroleum oils, and solvents — produces odorous emissions. At about 350°F (175°C) the products begin to decompose, resulting in the emission of decomposition products from the cooking vessel. Emissions continue throughout the cooking process with the maximum rate of emissions occurring just after the maximum temperature has been reached. Emissions from the cooking phase can be reduced by more than 90 percent with the use of scrubbers or condensers followed by afterburners.[4-5]

Compounds emitted from the cooking of oleoresinous varnish (resin plus varnish) include water vapor, fatty acids, glycerine, acrolein, phenols, aldehydes, ketones, terpene oils, terpenes, and carbon dioxide. Emissions of thinning solvents used in flexographic and rotogravure inks may also occur.

The quantity, composition, and rate of emissions from ink manufacturing depend upon the cooking temperature and time, the ingredients, the method of introducing additives, the degree of stirring, and the extent of air or inert gas blowing. Particulate emissions resulting from the addition of pigments to the vehicle are affected by the type of pigment and its particle size. Emission factors for the manufacture of printing ink are presented in Table 6.7-1.

Table 6.7-1 (Metric And English Units). EMISSION FACTORS FOR PRINTING INK MANUFACTURING[a]

EMISSION FACTOR RATING: E

Type of Process	Nonmethane Volatile Organic Compounds[b]		Particulates	
	kg/Mg of Product	lb/ton of Product	kg/Mg of Pigment	lb/ton of Pigment
Vehicle cooking				
General	60	120	NA	NA
Oils	20	40	NA	NA
Oleoresinous	75	150	NA	NA
Alkyds	80	160	NA	NA
Pigment mixing	NA	NA	1	2

[a] Based on data from Section 6.4, Paint and Varnish. NA = not applicable.
[b] The nonmethane VOC emissions are a mix of volatilized vehicle components, cooking decomposition products, and ink solvent.

References For Section 6.7

1. *Air Pollutant Emission Factors*, APTD-0923, U. S. Environmental Protection Agency, Research Triangle Park, NC, April 1970.

2. R. N. Shreve, *Chemical Process Industries*, 3rd Ed., New York, McGraw Hill Book Co., 1967.

3. L. M. Larsen, *Industrial Printing Inks*, New York, Reinhold Publishing Company, 1962.

4. *Air Pollution Engineering Manual*, 2nd Edition, AP-40, U. S. Environmental Protection Agency, Research Triangle Park, NC, May 1973.

5. Private communication with Ink Division of Interchemical Corporation, Cincinnati, Ohio, November 10, 1969.

6.8 Soap And Detergents

6.8.1 General

6.8.1.1 Soap Manufacturing[1,3,6] -

The term "soap" refers to a particular type of detergent in which the water-solubilized group is carboxylate and the positive ion is usually sodium or potassium. The largest soap market is bar soap used for personal bathing. Synthetic detergents replaced soap powders for home laundering in the late 1940s, because the carboxylate ions of the soap react with the calcium and magnesium ions in the natural hard water to form insoluble materials called lime soap. Some commercial laundries that have soft water continue to use soap powders. Metallic soaps are alkali-earth or heavy-metal long-chain carboxylates that are insoluble in water but soluble in nonaqueous solvents. They are used as additives in lubricating oils, greases, rust inhibitors, and jellied fuels.

6.8.1.2 Detergent Manufacturing[1,3,6,8] -

The term "synthetic detergent products" applies broadly to cleaning and laundering compounds containing surface-active (surfactant) compounds along with other ingredients. Heavy-duty powders and liquids for home and commercial laundry detergent comprise 60 to 65 percent of the U. S. soap and detergent market and were estimated at 2.6 megagrams (Mg) (2.86 million tons) in 1990.

Until the early 1970s, almost all laundry detergents sold in the U. S. were heavy-duty powders. Liquid detergents were introduced that utilized sodium citrate and sodium silicate. The liquids offered superior performance and solubility at a slightly increased cost. Heavy-duty liquids now account for 40 percent of the laundry detergents sold in the U. S., up from 15 percent in 1978. As a result, 50 percent of the spray drying facilities for laundry granule production have closed since 1970. Some current trends, including the introduction of superconcentrated powder detergents, will probably lead to an increase in spray drying operations at some facilities. Manufacturers are also developing more biodegradable surfactants from natural oils.

6.8.2 Process Descriptions

6.8.2.1 Soap [1,3,6] -

From American colonial days to the early 1940s, soap was manufactured by an alkaline hydrolysis reaction called saponification. Soap was made in huge kettles into which fats, oils, and caustic soda were piped and heated to a brisk boil. After cooling for several days, salt was added, causing the mixture to separate into two layers with the "neat" soap on top and spent lye and water on the bottom. The soap was pumped to a closed mixing tank called a crutcher where builders, perfumes, and other ingredients were added. Builders are alkaline compounds that improve the cleaning performance of the soap. Finally, the soap was rolled into flakes, cast or milled into bars, or spray-dried into soap powder.

An important modern process (post 1940s) for making soap is the direct hydrolysis of fats by water at high temperatures. This permits fractionation of the fatty acids, which are neutralized to soap in a continuous process as shown in Figure 6.8-1. Advantages for this process include close control of the soap concentration, the preparation of soaps of certain chain lengths for specific purposes, and easy recovery of glycerin, a byproduct. After the soap is recovered, it is pumped to the crutcher and treated the same as the product from the kettle process.

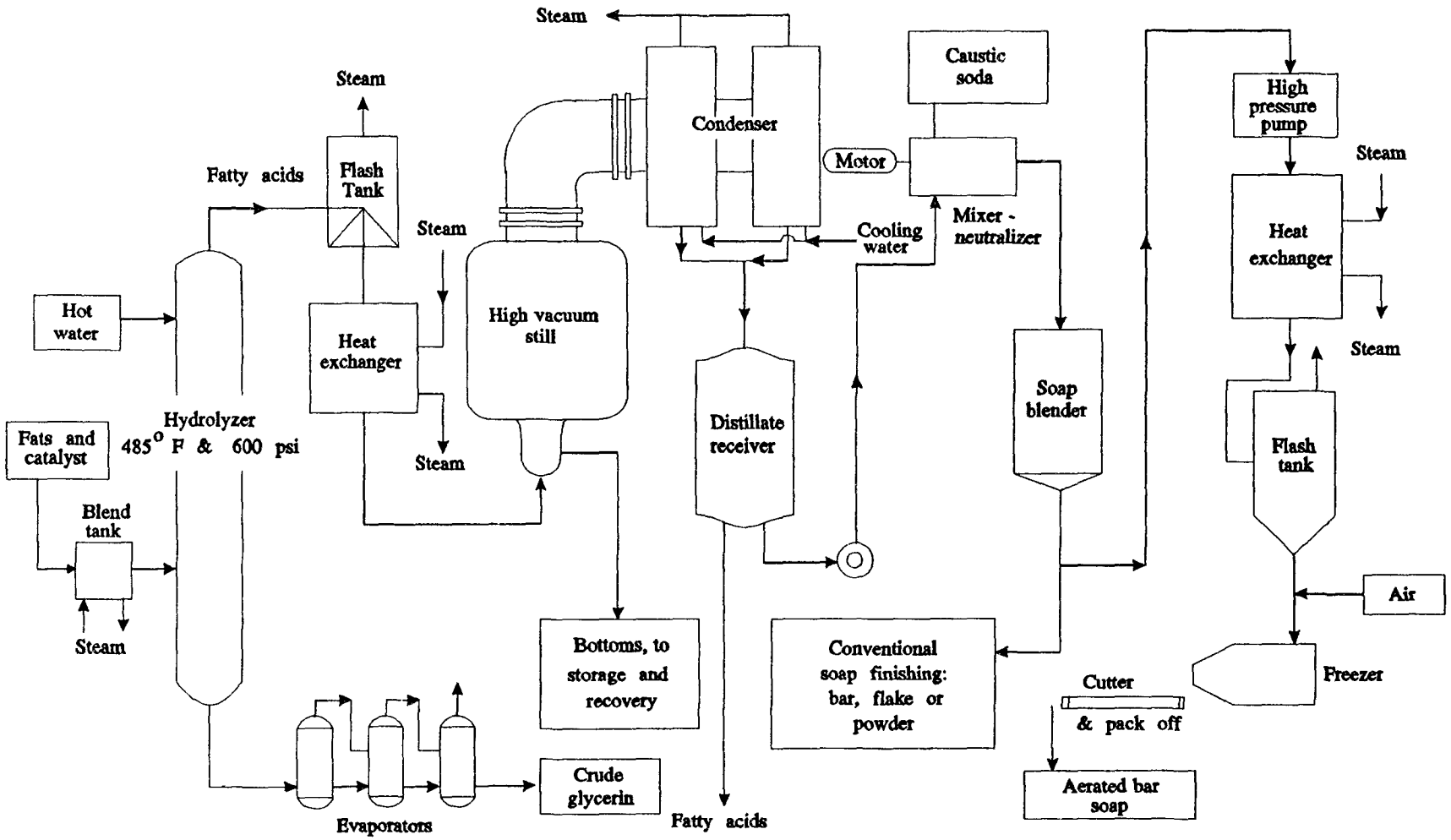

Figure 6.8-1. Continuous process for fatty acids and soaps.

6.8.2.2 Detergent[1,3,6,8] -

The manufacture of spray-dried detergent has 3 main processing steps: (1) slurry preparation, (2) spray drying, and (3) granule handling. The 3 major components of detergent are surfactants (to remove dirt and other unwanted materials), builders (to treat the water to improve surfactant performance), and additives to improve cleaning performance. Additives may include bleaches, bleach activators, antistatic agents, fabric softeners, optical brighteners, antiredeposition agents, and fillers.

The formulation of slurry for detergent granules requires the intimate mixing of various liquid, powdered, and granulated materials. Detergent slurry is produced by blending liquid surfactant with powdered and liquid materials (builders and other additives) in a closed mixing tank called a soap crutcher. Premixing of various minor ingredients is performed in a variety of equipment prior to charging to the crutcher or final mixer. Figure 6.8-2 illustrates the various operations. Liquid surfactant used in making the detergent slurry is produced by the sulfonation of either a linear alkylate or a fatty acid, which is then neutralized with a caustic solution containing sodium hydroxide (NaOH). The blended slurry is held in a surge vessel for continuous pumping to a spray dryer. The slurry is atomized by spraying through nozzles rather than by centrifugal action. The slurry is sprayed at pressures of 4.100 to 6.900 kilopascals (kPa) (600 to 1000 pounds per square inch [psi]) in single-fluid nozzles and at pressures of 340 to 690 kPa (50 to 100 psi) in 2-fluid nozzles. Steam or air is used as the atomizing fluid in the 2-fluid nozzles. The slurry is sprayed at high pressure into a vertical drying tower having a stream of hot air of from 315 to 400°C (600 to 750°F). All spray drying equipment designed for detergent granule production incorporates the following components: spray drying tower, air heating and supply system, slurry atomizing and pumping equipment, product cooling equipment, and conveying equipment. Most towers designed for detergent production are countercurrent, with slurry introduced at the top and heated air introduced at the bottom. The towers are cylindrical with cone bottoms and range in size from 4 to 7 meters (m) (12 to 24 feet [ft]) in diameter and 12 to 38 m (40 to 125 ft) in height. The detergent granules are conveyed mechanically or by air from the tower to a mixer to incorporate additional dry or liquid ingredients, and finally to packaging and storage.

6.8.3 Emissions And Controls

6.8.3.1 Soap[1,3,6] -

The main atmospheric pollution problem in soap manufacturing is odor. The storage and handling of liquid ingredients (including sulfonic acids and salts) and sulfates are some of the sources of this odor. Vent lines, vacuum exhausts, raw material and product storage, and waste streams are all potential odor sources. Control of these odors may be achieved by scrubbing exhaust fumes and, if necessary, incinerating the remaining volatile organic compounds (VOC). Odors emanating from the spray dryer may be controlled by scrubbing with an acid solution. Blending, mixing, drying, packaging, and other physical operations may all involve dust emissions. The production of soap powder by spray drying is the single largest source of dust in the manufacture of synthetic detergents. Dust emissions from other finishing operations can be controlled by dry filters such as baghouses. The large sizes of the particulate from synthetic detergent drying means that high-efficiency cyclones installed in series can achieve satisfactory control. Currently, no emission factors are available for soap manufacturing. No information on hazardous air pollutants (HAP), VOCs, ozone depleters, or heavy metal emissions information were found for soap manufacturing.

6.8.3.2 Detergent[1,3-4,6,8] -

The exhaust air from detergent spray drying towers contains 2 types of air contaminants: (1) fine detergent particles and (2) organics vaporized in the higher temperature zones of the tower. Emission factors for particulates from spray drying operations are shown in Table 6.8-1. Factors are expressed in units of kilograms per megagram (kg/Mg) and pounds per ton (lb/ton) of product.

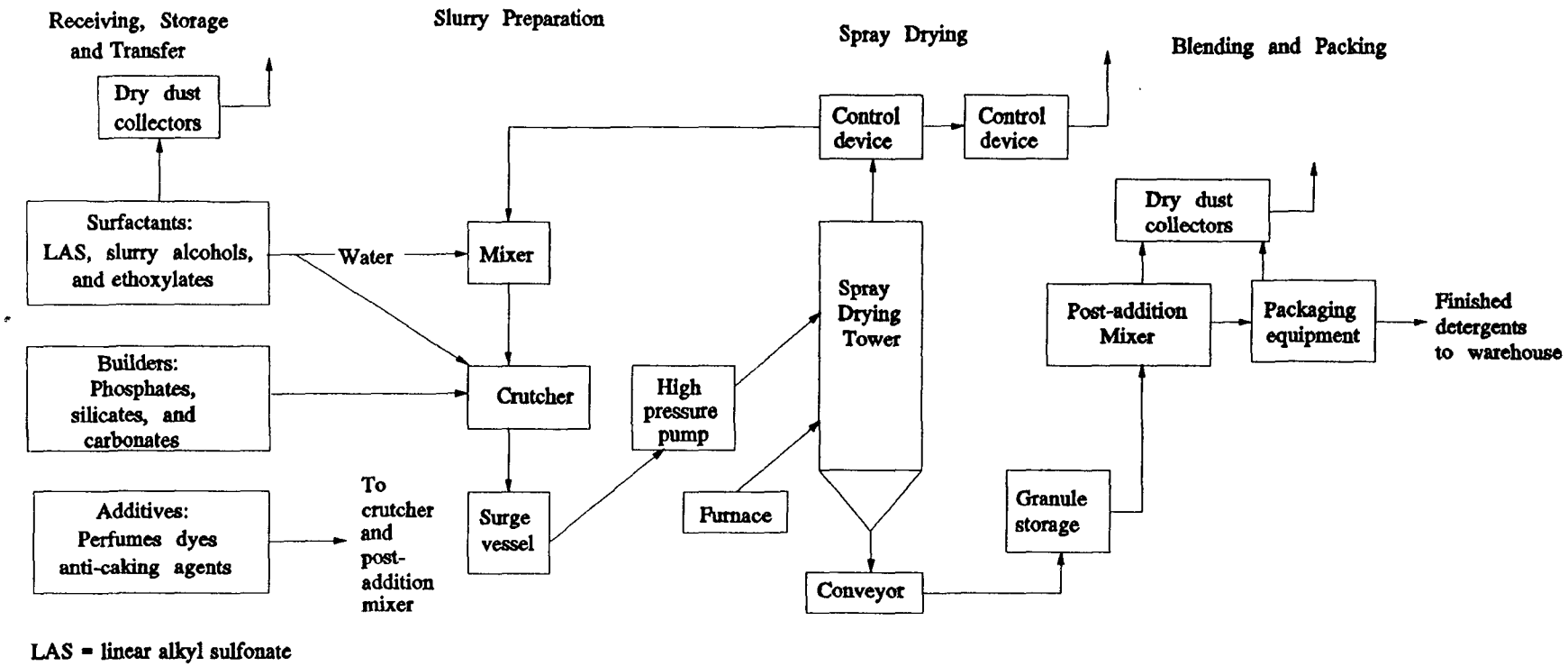

Figure 6.8-2. Manufacture of spray-dried detergents.

Table 6.8-1 (Metric And English Units). PARTICULATE EMISSION FACTORS FOR DETERGENT SPRAY DRYING[a]

EMISSION FACTOR RATING: E[b]

Control Device	Efficiency (%)	Particulate	
		kg/Mg of Product	lb/ton of Product
Uncontrolled (SCC 3-01-009-01)	NA	45	90
Cyclone	85	7	14
Cyclone with:			
Spray chamber	92	3.5	7
Packed scrubber	95	2.5	5
Venturi scrubber	97	1.5	3
Wet scrubber	99	0.544	1.09
Wet scrubber/ESP	99.9	0.023	0.046
Packed bed/ESP	99[c]	0.47	0.94
Fabric filter	99	0.54	1.1

[a] Some type of primary collector, such as a cyclone, is considered integral to a spray drying system. NA = not applicable. ESP = electrostatic precipitator. SCC = Source Classification Code.
[b] Emission factors are estimations and are not supported by current test data.
[c] Emission factor has been calculated from a single source test. An efficiency of 99% has been estimated.

Dust emissions are generated at scale hoppers, mixers, and crutchers during the batching and mixing of fine dry ingredients to form slurry. Conveying, mixing, and packaging of detergent granules can also cause dust emissions. Pneumatic conveying of fine materials causes dust emissions when conveying air is separated from bulk solids. For this process, fabric filters are generally used, not only to reduce or to eliminate dust emissions, but also to recover raw materials. The dust emissions principally consist of detergent compounds, although some of the particles are uncombined phosphates, sulfates, and other mineral compounds.

Dry cyclones and cyclonic impingement scrubbers are the primary collection equipment employed to capture the detergent dust in the spray dryer exhaust for return to processing. Dry cyclones are used in parallel or in series to collect this particulate matter (PM) and recycle it back to the crutcher. The dry cyclone separators can remove 90 percent or more by weight of the detergent product fines from the exhaust air. Cyclonic impinged scrubbers are used in parallel to collect the particulate from a scrubbing slurry and to recycle it to the crutcher.

Secondary collection equipment is used to collect fine particulates that escape from primary devices. For example, cyclonic impingement scrubbers are often followed by mist eliminators, and dry cyclones are followed by fabric filters or scrubber/electrostatic precipitator units. Several types of scrubbers can be used following the cyclone collectors. Venturi scrubbers have been used but are being replaced with packed bed scrubbers. Packed bed scrubbers are usually followed by wet-pipe-

type electrostatic precipitators built immediately above the packed bed in the same vessel. Fabric filters have been used after cyclones but have limited applicability, especially on efficient spray dryers, due to condensing water vapor and organic aerosols binding the fabric filter.

In addition to particulate emissions, volatile organics may be emitted when the slurry contains organic materials with low vapor pressures. The VOCs originate primarily from the surfactants included in the slurry. The amount vaporized depends on many variables such as tower temperature and the volatility of organics used in the slurry. These vaporized organic materials condense in the tower exhaust airstream into droplets or particles. Paraffin alcohols and amides in the exhaust stream can result in a highly visible plume that persists after the condensed water vapor plume has dissipated.

Opacity and the organic emissions are influenced by granule temperature and moisture at the end of drying, temperature profiles in the dryer, and formulation of the slurry. A method for controlling visible emissions would be to remove offending organic compounds (i. e., by substitution) from the slurry. Otherwise, tower production rate may be reduced thereby reducing air inlet temperatures and exhaust temperatures. Lowering production rate will also reduce organic emissions.

Some of the HAPs and VOCs identified from the VOC/PM Speciate Database Management System (SPECIATE) are: hexane, methyl alcohol, 1,1,1-trichloroethane, perchloroethylene, benzene, and toluene. Lead was identified from SPECIATE data as the only heavy metal constituent. No numerical data are presented for lead, HAP, or VOC emissions due to the lack of sufficient supporting documentation.

References For Section 6.8

1. *Source Category Survey: Detergent Industry*, EPA Contract No. 68-02-3059, June 1980.

2. A. H. Phelps, "Air Pollution Aspects Of Soap And Detergent Manufacture", *APCA Journal*, *17*(8):505-507, August 1967.

3. R. N. Shreve, *Third Edition: Chemical Process Industries*, McGraw-Hill Book Company, New York, NY.

4. J. H. Perry, *Fourth Edition: Chemical Engineers Handbook*, McGraw-Hill Book Company, New York, NY.

5. *Soap And Detergent Manufacturing: Point Source Category*, EPA-440/1-74-018-a, U. S. Environmental Protection Agency, Research Triangle Park, NC, April 1974.

6. J. A. Danielson, *Air Pollution Engineering Manual (2nd Edition)*, AP-40, U. S. Environmental Protection Agency, Research Triangle Park, NC, May 1973. Out of Print.

7. A. Lanteri, "Sulfonation And Sulfation Technology", *Journal Of The American Oil Chemists Society*, *55*:128-132, January 1978.

8. A. J. Buonicore and W. T. Davis, Eds., *Air Pollution Engineering Manual*, Van Nostrand Reinhold, New York, NY, 1992.

9. *Emission Test Report, Procter And Gamble, Augusta, GA*, Georgia Department Of Natural Resources, Atlanta, GA, July 1988.

10. *Emission Test Report, Time Products, Atlanta, GA*, Georgia Department Of Natural Resources, Atlanta, GA, November 1988.

11. *AIRS Facility Subsystem Source Classification Codes And Emission Factor Listing For Criteria Air Pollutants*, EPA-450/4-90-003, U. S. Environmental Protection Agency, Research Triangle Park, NC, March 1990.

6.9 Synthetic Fibers

6.9.1 General[1-3]

There are 2 types of synthetic fiber products, the semisynthetics, or cellulosics (viscose rayon and cellulose acetate), and the true synthetics, or noncellulosics (polyester, nylon, acrylic and modacrylic, and polyolefin). These 6 fiber types compose over 99 percent of the total production of manmade fibers in the U. S.

6.9.2 Process Description[2-6]

Semisynthetics are formed from natural polymeric materials such as cellulose. True synthetics are products of the polymerization of smaller chemical units into long-chain molecular polymers. Fibers are formed by forcing a viscous fluid or solution of the polymer through the small orifices of a spinnerette (see Figure 6.9-1) and immediately solidifying or precipitating the resulting filaments. This prepared polymer may also be used in the manufacture of other nonfiber products such as the enormous number of extruded plastic and synthetic rubber products.

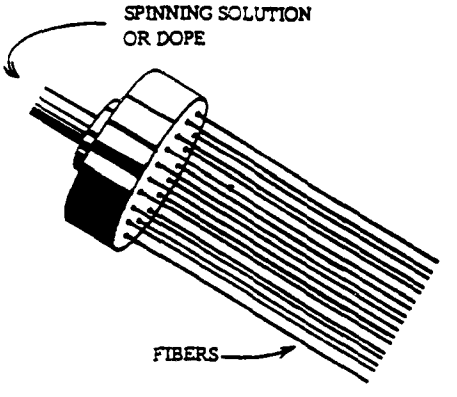

Figure 6.9-1. Spinnerette.

Synthetic fibers (both semisynthetic and true synthetic) are produced typically by 2 easily distinguishable methods, melt spinning and solvent spinning. Melt spinning processes use heat to melt the fiber polymer to a viscosity suitable for extrusion through the spinnerette. Solvent spinning processes use large amounts of organic solvents, which usually are recovered for economic reasons, to dissolve the fiber polymer into a fluid polymer solution suitable for extrusion through a spinnerette. The major solvent spinning operations are dry spinning and wet spinning. A third method, reaction spinning, is also used, but to a much lesser extent. Reaction spinning processes involve the formation of filaments from prepolymers and monomers that are further polymerized and cross-linked after the filament is formed.

Figure 6.9-2 is a general process diagram for synthetic fiber production using the major types of fiber spinning procedures. The spinning process used for a particular polymer is determined by

the polymer's melting point, melt stability, and solubility in organic and/or inorganic (salt) solvents. (The polymerization of the fiber polymer is typically carried out at the same facility that produces the fiber.) Table 6.9-1 lists the different types of spinning methods with the fiber types produced by each method. After the fiber is spun, it may undergo one or more different processing treatments to meet the required physical or handling properties. Such processing treatments include drawing, lubrication, crimping, heat setting, cutting, and twisting. The finished fiber product may be classified as tow, staple, or continuous filament yarn.

Table 6.9-1. TYPES OF SPINNING METHODS AND FIBER TYPES PRODUCED

Spinning Method	Fiber Type
Melt spinning	Polyester Nylon 6 Nylon 66 Polyolefin
Solvent spinning	
Dry solvent spinning	Cellulose acetate Cellulose triacetate Acrylic Modacrylic Vinyon Spandex
Wet solvent spinning	Acrylic Modacrylic
Reaction spinning	Spandex Rayon (viscose process)

6.9.2.1 Melt Spinning -

Melt spinning uses heat to melt the polymer to a viscosity suitable for extrusion. This type of spinning is used for polymers that are not decomposed or degraded by the temperatures necessary for extrusion. Polymer chips may be melted by a number of methods. The trend is toward melting and immediate extrusion of the polymer chips in an electrically heated screw extruder. Alternatively, the molten polymer is processed in an inert gas atmosphere, usually nitrogen, and is metered through a precisely machined gear pump to a filter assembly consisting of a series of metal gauges interspersed in layers of graded sand. The molten polymer is extruded at high pressure and constant rate through a spinnerette into a relatively cooler air stream that solidifies the filaments. Lubricants and finishing oils are applied to the fibers in the spin cell. At the base of the spin cell, a thread guide converges the individual filaments to produce a continuous filament yarn, or a spun yarn, that typically is composed of between 15 and 100 filaments. Once formed, the filament yarn either is immediately wound onto bobbins or is further treated for certain desired characteristics or end use.

Since melt spinning does not require the use of solvents, VOC emissions are significantly lower than those from dry and wet solvent spinning processes. Lubricants and oils are sometimes added during the spinning of the fibers to provide certain properties necessary for subsequent operations such as lubrication and static suppression. These lubricants and oils vaporize, condense,

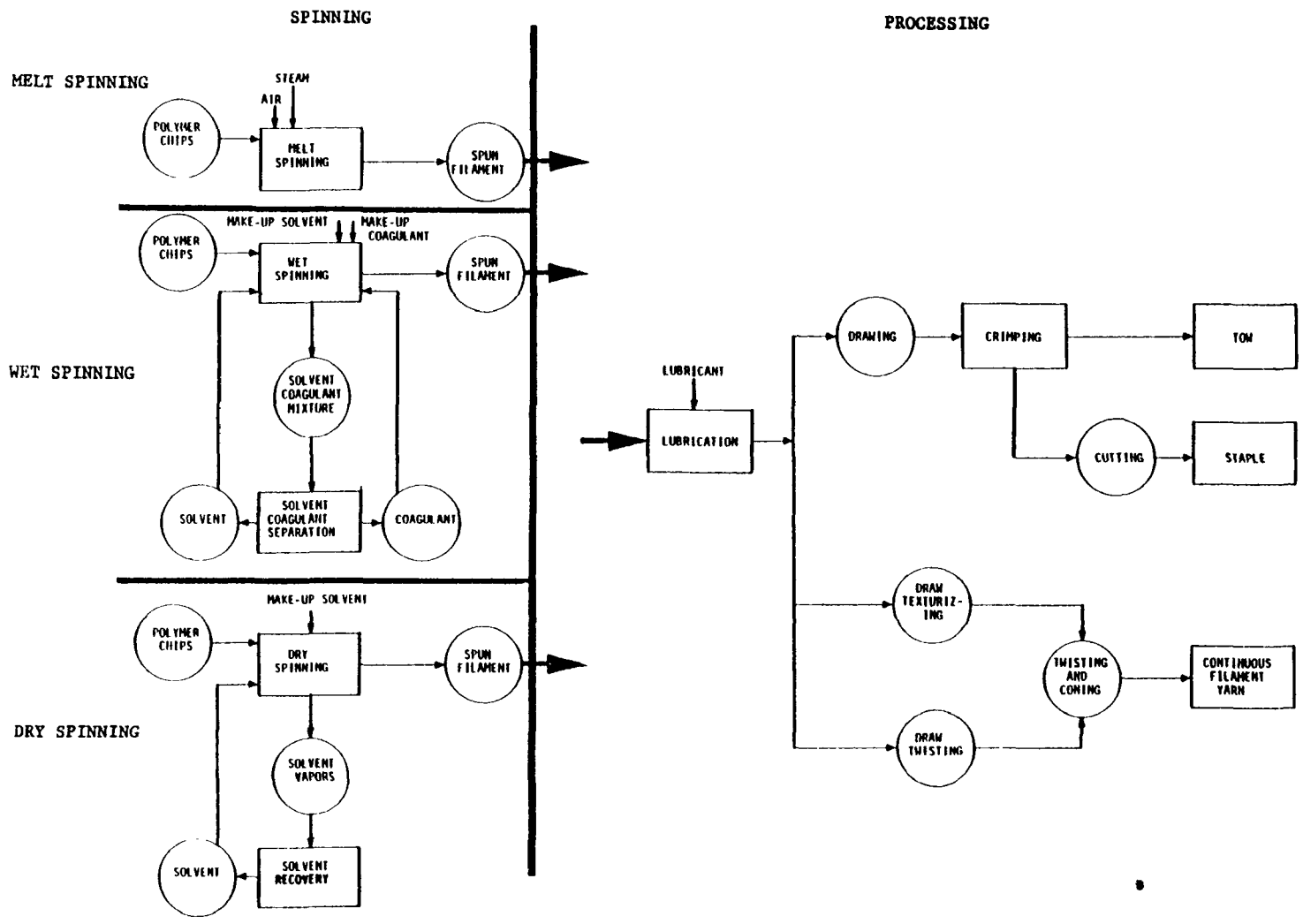

Figure 6.9-2. General process diagram for melt, wet, and dry spun synthetic fibers.

and then coalesce as aerosols primarily from the spinning operation, although certain post-spinning operations may also give rise to these aerosol emissions. Treatments include drawing, lubrication, crimping, heat setting, cutting, and twisting.

6.9.2.2. Dry Solvent Spinning -

The dry spinning process begins by dissolving the polymer in an organic solvent. This solution is blended with additives and is filtered to produce a viscous polymer solution, referred to as "dope", for spinning. The polymer solution is then extruded through a spinnerette as filaments into a zone of heated gas or vapor. The solvent evaporates into the gas stream and leaves solidified filaments, which are further treated using one or more of the processes described in the general process description section. (See Figure 6.9-3.) This type of spinning is used for easily dissolved polymers such as cellulose acetate, acrylics, and modacrylics.

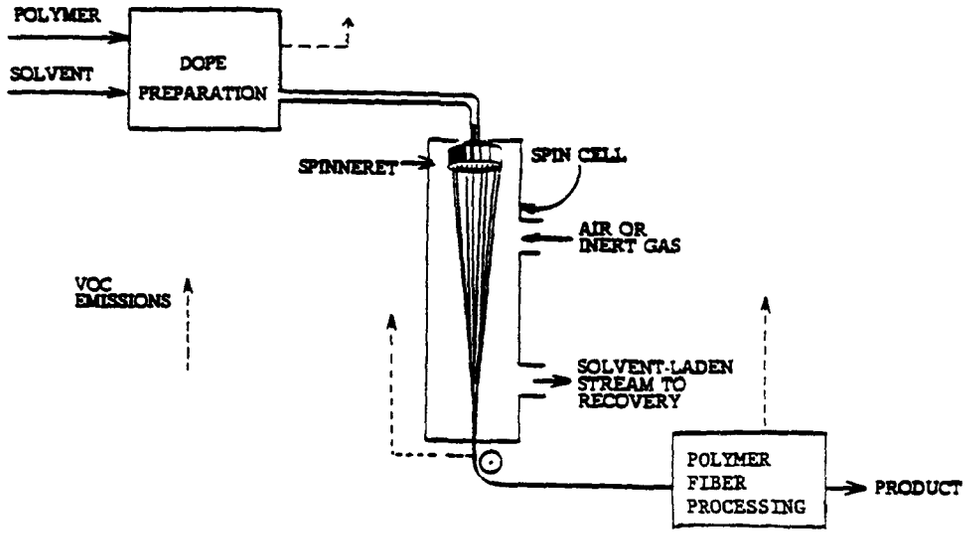

Figure 6.9-3. Dry spinning.

Dry spinning is the fiber formation process potentially emitting the largest amounts of VOCs per pound of fiber produced. Air pollutant emissions include volatilized residual monomer, organic solvents, additives, and other organic compounds used in fiber processing. Unrecovered solvent constitutes the major substance. The largest amounts of unrecovered solvent are emitted from the fiber spinning step and drying the fiber. Other emission sources include dope preparation (dissolving the polymer, blending the spinning solution, and filtering the dope), fiber processing (drawing, washing, and crimping), and solvent recovery.

6.9.2.3 Wet Solvent Spinning -

Wet spinning also uses solvent to dissolve the polymer to prepare the spinning dope. The process begins by dissolving polymer chips in a suitable organic solvent, such as dimethylformamide (DMF), dimethylacetamide (DMAc), or acetone, as in dry spinning; or in a weak inorganic acid, such as zinc chloride or aqueous sodium thiocyanate. In wet spinning, the spinning solution is extruded through spinnerettes into a precipitation bath that contains a coagulant (or precipitant) such as aqueous

DMAc or water. Precipitation or coagulation occurs by diffusion of the solvent out of the thread and by diffusion of the coagulant into the thread. Wet spun filaments also undergo one or more of the additional treatment processes described earlier, as depicted in Figure 6.9-4.

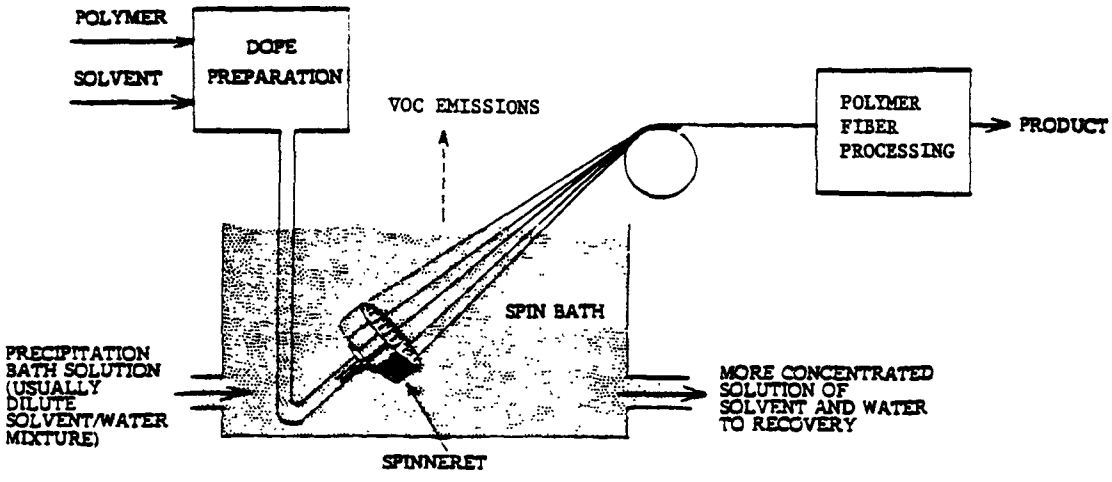

Figure 6.9-4. Wet spinning.

Air pollution emission points in the wet spinning organic solvent process are similar to those of dry spinning. Wet spinning processes that use solutions of acids or salts to dissolve the polymer chips emit no solvent VOC, only unreacted monomer, and are, therefore, relatively clean from an air pollution standpoint. For those that require solvent, emissions occur as solvent evaporates from the spinning bath and from the fiber in post-spinning operations.

6.9.2.4 Reaction Spinning -

As in the wet and dry spinning processes, the reaction spinning process begins with the preparation of a viscous spinning solution, which is prepared by dissolving a low molecular weight polymer, such as polyester for the production of spandex fibers, in a suitable solvent and a reactant, such as di-isocyanate. The spinning solution is then forced through spinnerettes into a solution containing a diamine, similarly to wet spinning, or is combined with the third reactant and then dry spun. The primary distinguishable characteristic of reaction spinning processes is that the final cross-linking between the polymer molecule chains in the filament occurs after the fibers have been spun. Post-spinning steps typically include drying and lubrication. Emissions from the wet and dry reaction spinning processes are similar to those of solvent wet and dry spinning, respectively.

6.9.3 Emissions And Controls

For each pound of fiber produced with the organic solvent spinning processes, a pound of polymer is dissolved in about 3 pounds of solvent. Because of the economic value of the large amounts of solvent used, capture and recovery of these solvents are an integral portion of the solvent spinning processes. At present, 94 to 98 percent of the solvents used in these fiber formation processes is recovered. In both dry and wet spinning processes, capture systems with subsequent solvent recovery are applied most frequently to the fiber spinning operation alone, because the emission stream from the spinning operation contains the highest concentration of solvent and,

emission stream from the spinning operation contains the highest concentration of solvent and, therefore, possesses the greatest potential for efficient and economic solvent recovery. Recovery systems used include gas adsorption, gas absorption, condensation, and distillation and are specific to a particular fiber type or spinning method. For example, distillation is typical in wet spinning processes to recover solvent from the spinning bath, drawing, and washing (see Figure 6.9-8), while condensers or scrubbers are typical in dry spinning processes for recovering solvent from the spin cell (see Figure 6.9-6 and Figure 6.9-9). The recovery systems themselves are also a source of emissions from the spinning processes.

The majority of VOC emissions from pre-spinning (dope preparation, for example) and post-spinning (washing, drawing, crimping, etc.) operations typically are not recovered for reuse. In many instances, emissions from these operations are captured by hoods or complete enclosures to prevent worker exposure to solvent vapors and unreacted monomer. Although already captured, the quantities of solvent released from these operations are typically much smaller than those released during the spinning operation. The relatively high air flow rates required in order to reduce solvent and monomer concentrations around the process line to acceptable health and safety limits make recovery economically unattractive. Solvent recovery, therefore, is usually not attempted.

Table 6.9-2 presents emission factors from production of the most widely known semisynthetic and true synthetic fibers. These emission factors address emissions only from the spinning and post-spinning operations and the associated recovery or control systems. Emissions from the polymerization of the fiber polymer and from the preparation of the fiber polymer for spinning are not included in these emission factors. While significant emissions occur in the polymerization and related processes, these emissions are discussed in Sections 6.6, "Plastics", and 6.10, "Synthetic Rubber".

Examination of VOC pollutant emissions from the synthetic fibers industry has recently concentrated on those fiber production processes that use an organic solvent to dissolve the polymer for extrusion or that use an organic solvent in some other way during the filament forming step. Such processes, while representing only about 20 percent of total industry production, do generate about 94 percent of total industry VOC emissions. Particulate emissions from fiber plants are relatively low, at least an order of magnitude lower than the solvent VOC emissions.

6.9.4 Semisynthetics

6.9.4.1 Rayon Fiber Process Description[5,7-10] -

In the United States, most rayon is made by the viscose process. Rayon fibers are made using cellulose (dissolved wood pulp), sodium hydroxide, carbon disulfide, and sulfuric acid. As shown in Figure 6.9-5, the series of chemical reactions in the viscose process used to make rayon consists of the following stages:

1. Wood cellulose and a concentrated solution of sodium hydroxide react to form soda cellulose.

2. The soda cellulose reacts with carbon disulfide to form sodium cellulose xanthate.

3. The sodium cellulose xanthate is dissolved in a dilute solution of sodium hydroxide to give a viscose solution.

Table 6.9-2 (English Units). EMISSION FACTORS FOR SYNTHETIC FIBER MANUFACTURING[a]

EMISSION FACTOR RATING: C

Type Of Fiber	Nonmethane Volatile Organics	Particulate	References
Rayon, viscose process	0	—[c]	7-8,10,35-36
Cellulose acetate, filter tow	112[d]	—[c]	11,37
Cellulose acetate and triacetate, filament yarn	199[d,e]	—[c]	11,38
Polyester, melt spun			41-42
Staple	0.6[f,g]	252[h,j]	
Yarn[k]	0.05[f,g]	0.03[g,j]	
Acrylic, dry spun			21,43-44
Uncontrolled	40	—[c]	
Controlled	32[m]	—[c]	
Modacrylic, dry spun	125[g,h]	—[c]	45
Acrylic and modacrylic, wet spun	6.75[p]	—[c]	19,46
Acrylic, inorganic wet spun			47-48
Homopolymer	20.7[g,q]	—[c]	
Copolymer	2.75[g,r]	—[c]	
Nylon 6, melt spun			25,49
Staple	3.93[g]	0.01[g]	
Yarn	0.45[s]	—[c]	
Nylon 66, melt spun			26
Uncontrolled	2.13[f,t]	0.5[u]	
Controlled	0.31[f,v]	0.1[u]	
Polyolefin, melt spun	5[g]	0.01[g]	5,25,28,49
Spandex, dry spun	4.23[m]	—[c]	32
Spandex, reaction spun	138[x]	—[c]	50-51
Vinyon, dry spun	150[m]	—[c]	52

[a] Factors are pounds of emissions per 1000 pounds (lb) of fiber spun including waste fiber.
[b] Uncontrolled carbon disulfide (CS_2) emissions are 251 lb CS_2/1000 lb fiber spun; uncontrolled hydrogen sulfide (H_2S) emissions are 50.4 lb H_2S/1000 lb fiber spun. If recovery of CS_2 from the "hot dip" stage takes place, CS_2 emissions are reduced by about 16%.
[c] Particulate emissions from the spinning solution preparation area and later stages through the finished product are essentially nil.

Table 6.9-2 (cont.).

[d] After recovery from the spin cells and dryers. Use of more extensive recovery systems can reduce emissions by 40% or more.
[e] Use of methyl chloride and methanol as the solvent, rather than acetone, in production of triacetate can double emissions.
[f] Emitted in aerosol form.
[g] Uncontrolled.
[h] After control on extrusion parts cleaning operations.
[j] Mostly particulate, with some aerosols.
[k] Factors for high intrinsic viscosity industrial and tire yarn production are 0.18 lb VOC and 3.85 lb particulate.
[m] After recovery from spin cells.
[n] About 18 lb is from dope preparation, and about 107 lb is from spinning/post-spinning operations.
[p] After solvent recovery from the spinning, washing, and drawing stages. This factor includes acrylonitrile emissions. An emission factor of 87 lb/1000 lb fiber has been reported.
[q] Average emission factor; range is from 13.9 to 27.7 lb.
[r] Average emission factor; range is from 2.04 to 16.4 lb.
[s] After recovery of emissions from the spin cells. Without recovery, emission factor would be 1.39 lb.
[t] Average of plants producing yarn from batch and continuous polymerization processes. Range is from abut 0.5 to 4.9 lb. Add 0.1 lb to the average factor for plants producing tow or staple. Continuous polymerization processes average emission rates approximately 170%. Batch polymerization processes average emission rates approximately 80%.
[u] For plants with spinning equipment cleaning operations.
[v] After control of spin cells in plants with batch and continuous polymerization processes producing yarn. Range is from 0.1 to 0.6 lb. Add 0.02 lb to the average controlled factor for producing tow or staple. Double the average controlled emission factor for plants using continuous polymerization only; subtract 0.01 lb for plants using batch polymerization only.
[w] After control of spinning equipment cleaning operation.
[x] After recovery by carbon adsorption from spin cells and post-spinning operations. Average collection efficiency 83%. Collection efficiency of carbon adsorber decreases over 18 months from 95% to 63%.

4. The solution is ripened or aged to complete the reaction.

5. The viscose solution is extruded through spinnerettes into dilute sulfuric acid, which regenerates the cellulose in the form of continuous filaments.

Emissions And Controls -

Air pollutant emissions from viscose rayon fiber production are mainly carbon disulfide (CS_2), hydrogen sulfide (H_2S), and small amounts of particulate matter. Most CS_2 and H_2S emissions occur during the spinning and post-spinning processing operations. Emission controls are not used extensively in the rayon fiber industry. A countercurrent scrubber (condenser) is used in at least one instance to recover CS_2 vapors from the sulfuric acid bath alone. The emissions from this operation are high enough in concentration and low enough in volume to make such recovery both technically and economically feasible. The scrubber recovers nearly all of the CS_2 and H_2S that enters it, reducing overall CS_2 and H_2S emissions from the process line by about 14 percent. While carbon adsorption systems are capable of CS_2 emission reductions of up to 95 percent, attempts to use carbon adsorbers have had serious problems.

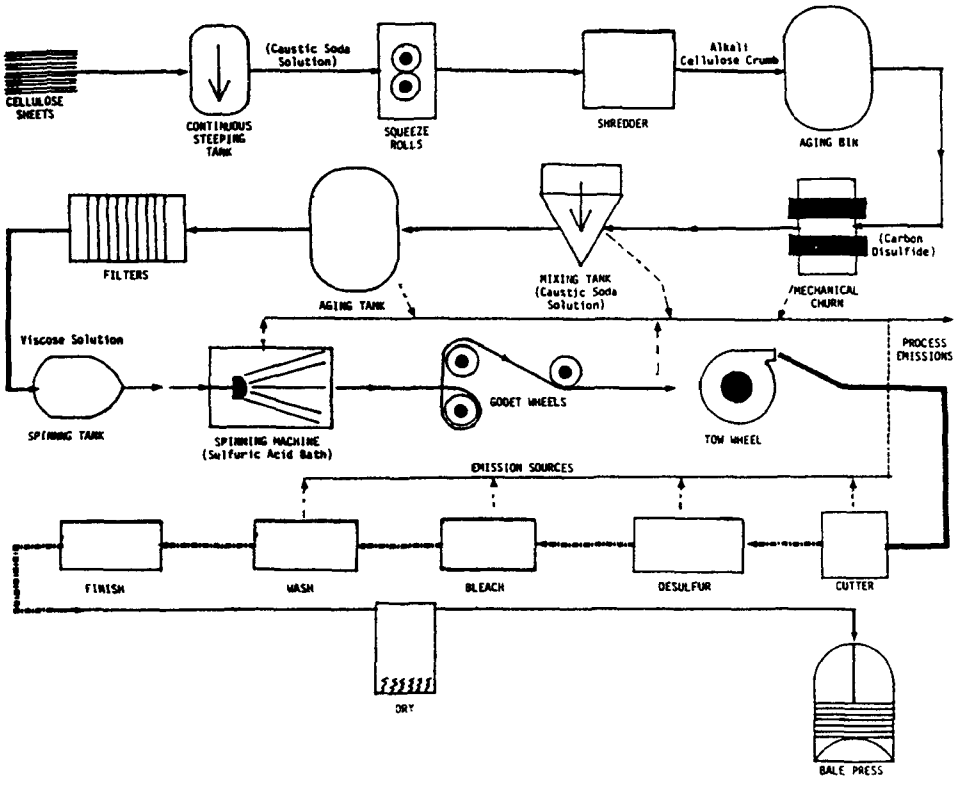

Figure 6.9-5. Rayon viscose process.

6.9.4.2. Cellulose Acetate And Triacetate Fiber Process Description[5,11-14]

All cellulose acetate and triacetate fibers are produced by dry spinning. These fibers are used for either cigarette filter tow or filament yarn. Figure 6.9-6 shows the typical process for the production of cigarette filter tow. Dried cellulose acetate polymer flakes are dissolved in a solvent, acetone and/or a chlorinated hydrocarbon in a closed mixer. The spinning solution (dope) is filtered, as it is with other fibers. The dope is forced through spinnerettes to form cellulose acetate filaments, from which the solvent rapidly evaporates as the filaments pass down a spin cell or column. After the filaments emerge from the spin cell, there is a residual solvent content that continues to evaporate more slowly until equilibrium is attained. The filaments then undergo several post-spinning operations before they are cut and baled.

In the production of filament yarn, the same basic process steps are carried out as for filter tow, up through and including the actual spinning of the fiber. Unlike filter tow filaments, however, filaments used for filament yarn do not undergo the series of post-spinning operations shown in Figure 6.9-6, but rather are wound immediately onto bobbins as they emerge from the spin cells. In some instances, a slight twist is given to the filaments to meet product specifications. In another area, the wound filament yarn is subsequently removed from the bobbins and wrapped on beams or cones (referred to as "beaming") for shipment.

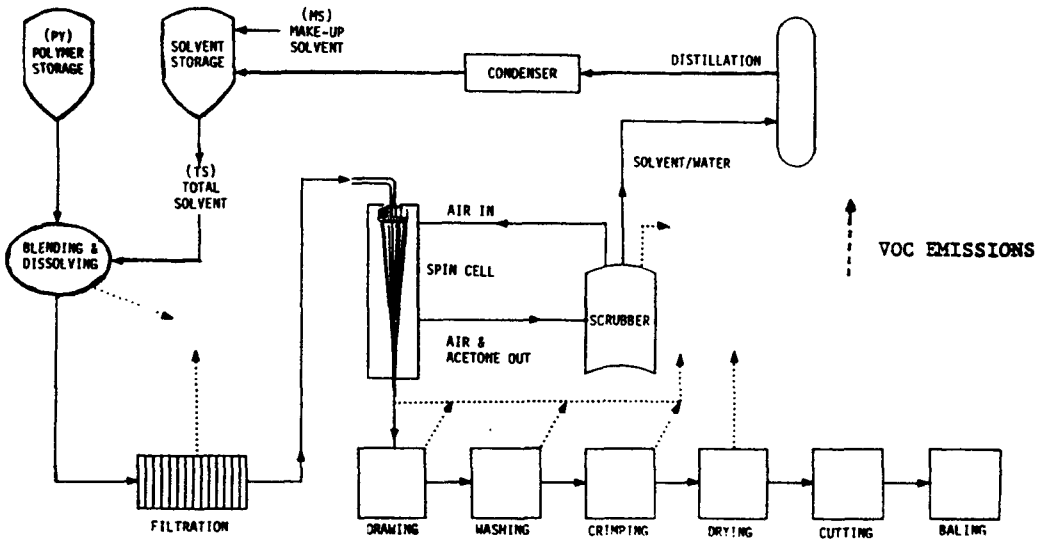

Figure 6.9-6. Cellulose acetate and triacetate filter tow.

Emissions And Controls -

Air pollutant emissions from cellulose acetate fiber production include solvents, additives, and other organic compounds used in fiber processing. Acetone, methyl ethyl ketone, and methanol are the only solvents currently used in commercial production of cellulose acetate and triacetate fibers.

In the production of all cellulose acetate fibers, i. e., tow, staple, or filament yarn, solvent emissions occur during dissolving of the acetate flakes, blending and filtering of the dope, spinning of the fiber, processing of the fiber after spinning, and the solvent recovery process. The largest emissions of solvent occur during spinning and processing of the fiber. Filament yarns are typically not dried as thoroughly in the spinning cell as are tow or staple yarns. Consequently, they contain larger amounts of residual solvent, which evaporates into the spinning room air where the filaments are wound and into the room air where the wound yarn is subsequently transferred to beams. This residual solvent continues to evaporate for several days until an equilibrium is attained. The largest emissions occur during the spinning of the fiber and the evaporation of the residual solvent from the wound and beamed filaments. Both processes also emit lubricants (various vegetable and mineral oils) applied to the fiber after spinning and before winding, particularly from the dryers in the cigarette filter tow process.

VOC control techniques are primarily carbon adsorbers and scrubbers. They are used to control and recover solvent emissions from process gas streams from the spin cells in both the production of cigarette filter tow and filament yarn. Carbon adsorbers also are used to control and recover solvent emissions from the dryers used in the production of cigarette filter tow. The solvent recovery efficiencies of these recovery systems range from 92 to 95 percent. Fugitive emissions from other post-spinning operations, even though they are a major source, are generally not controlled. In at least one instance however, an air management system is being used in which the air from the dope preparation and beaming areas is combined at carefully controlled rates with the spinning room air that is used to provide the quench air for the spin cell. A fixed amount of spinning room air is then combined with the process gas stream from the spin cell and this mix is vented to the recovery system.

6.9.5 True Synthetic Fibers

6.9.5.1 Polyester Fiber Process Description[5,11,15-17] -

Polyethylene terephthalate (PET) polymer is produced from ethylene glycol and either dimethyl terephthalate (DMT) or terephthalic acid (TPA). Polyester filament yarn and staple are manufactured either by direct melt spinning of molten PET from the polymerization equipment or by spinning reheated polymer chips. Polyester fiber spinning is done almost exclusively with extruders, which feed the molten polymer under pressure through the spinnerettes. Filament solidification is induced by blowing the filaments with cold air at the top of the spin cell. The filaments are then led down the spin cell through a fiber finishing application, from which they are gathered into tow, hauled off, and coiled into spinning cans. The post-spinning processes, steps 14 through 24 in Figure 6.9-7, usually take up more time and space and may be located far from the spinning machines. Depending on the desired product, post-spinning operations vary but may include lubrication, drawing, crimping, heat setting, and stapling.

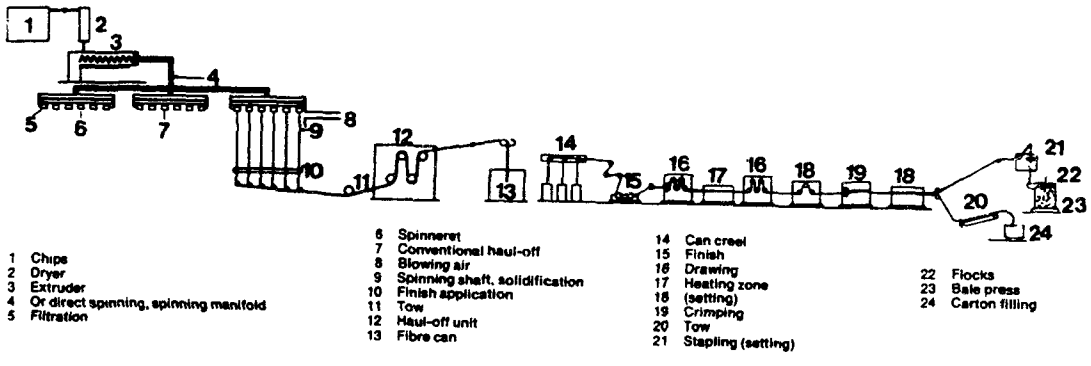

Figure 6.9-7. Polyester production.

Emissions And Controls -

Air pollutant emissions from polyester fiber production include polymer dust from drying operations, volatilized residual monomer, fiber lubricants (in the form of fume or oil smoke), and the burned polymer and combustion products from cleaning the spinning equipment. Relative to the solvent spinning processes, the melt spinning of polyester fibers does not generate significant amounts of volatilized monomer or polymer, so emission control measures typically are not used in the spinning area. Finish oils that are applied in polyester fiber spinning operations are usually recovered and recirculated. When applied, finish oils are vaporized in the spin cell to some extent and, in some instances, are vented to either demisters, which remove some of the oils, or catalytic incinerators, which oxidize significant quantities of volatile hydrocarbons. Small amounts of finish oils are vaporized in the post-spinning process. Vapors from hot draw operations are typically controlled by devices such as electrostatic precipitators. Emissions from most other steps are not controlled.

6.9.5.2 Acrylic And Modacrylic Fiber Process Description[5,18-24,53] -

Acrylic and modacrylic fibers are based on acrylonitrile monomer, which is derived from propylene and ammonia. Acrylics are defined as those fibers that are composed of at least 85 percent acrylonitrile. Modacrylics are defined as those fibers that are composed of between 35 and 85 percent acrylonitrile. The remaining composition of the fiber typically includes at least one of the following: methyl methacrylate, methyl acrylate, vinyl acetate, vinyl chloride, or vinylidene chloride.

Polyacrylonitrile fiber polymers are produced by the industry using 2 methods, suspension polymerization and solution polymerization. Either batch or continuous reaction modes may be employed.

As shown in Figure 6.9-8 and Figure 6.9-9, the polymer is dissolved in a suitable solvent, such as dimethylformamide or dimethylacetamide. Additives and delusterants are added, and the solution is usually filtered in plate and frame presses. The solution is then pumped through a manifold to the spinnerettes (usually a bank of 30 to 50 per machine). At this point in the process, either wet or dry spinning may be used to form the acrylic fibers. The spinnerettes are in a spinning bath for wet spun fiber or at the top of an enclosed column for dry spinning. The wet spun filaments are pulled from the bath on takeup wheels, then washed to remove more solvent. After washing, the filaments are gathered into a tow band, stretched to improve strength, dried, crimped, heat set, and then cut into staple. The dry spun filaments are gathered into a tow band, stretched, dried, crimped, and cut into staple.

Emissions And Controls -

Air pollutant emissions from the production of acrylic and modacrylic fibers include emissions of acrylonitrile (volatilized residual monomer), solvents, additives, and other organics used in fiber processing. As shown in Figure 6.9-8 and Figure 6.9-9, both the wet and the dry spinning processes have many emission points. The major emission areas for the wet spin fiber process are the spinning and washing steps. The major emission areas from dry spinning of acrylic and modacrylic fibers are the spinning and post-spinning areas, up through and including drying. Solvent recovery in dry-spinning of modacrylic fibers is also a major emission point.

The most cost-effective method for reducing solvent VOC emissions from both wet and dry spinning processes is a solvent recovery system. In wet spinning processes, distillation is used to recover and recycle solvent from the solvent/water stream that circulates through the spinning, washing, and drawing operations. In dry spinning processes, control techniques include scrubbers, condensers, and carbon adsorption. Scrubbers and condensers are used to recover solvent emissions from the spinning cells and the dryers. Carbon adsorption is used to recover solvent emissions from storage tank vents and from mixing and filtering operations. Distillation columns are also used in dry spinning processes to recover solvent from the condenser, scrubber, and wash water (from the washing operation).

6.9.5.3 Nylon Fiber 6 And 66 Process Description[5,17,24-27] -

Nylon 6 polymer is produced from caprolactam. Caprolactam is derived most commonly from cyclohexanone, which in turn comes from either phenol or cyclohexane. About 70 percent of all nylon 6 polymer is produced by continuous polymerization. Nylon 66 polymer is made from adipic acid and hexamethylene diamine, which react to form hexamethylene diamonium adipate (AH salt). The salt is then washed in a methyl alcohol bath. Polymerization then takes place under heat and pressure in a batch process. The fiber spinning and processing procedures are the same as described earlier in the description of melt spinning. The nylon production process is shown in Figure 6.9-10.

Emissions And Controls -

The major air pollutant emissions from production of nylon 6 fibers are volatilized monomer (caprolactam) and oil vapors or mists. Caprolactam emissions may occur at the spinning step because the polymerization reaction is reversible and exothermic, and the heat of extrusion causes the polymer to revert partially to the monomer form. A monomer recovery system is used on caprolactam volatilized at the spinnerette during nylon 6 fiber formation. Monomer recovery systems are not used in nylon 66 (polyhexamethylene adipamide) spinning operations because nylon 66 does not contain a significant amount of residual monomer. Emissions, though small, are in some instances controlled by catalytic incinerators. The finish oils, plasticizers, and lubricants applied to both nylon 6 and 66

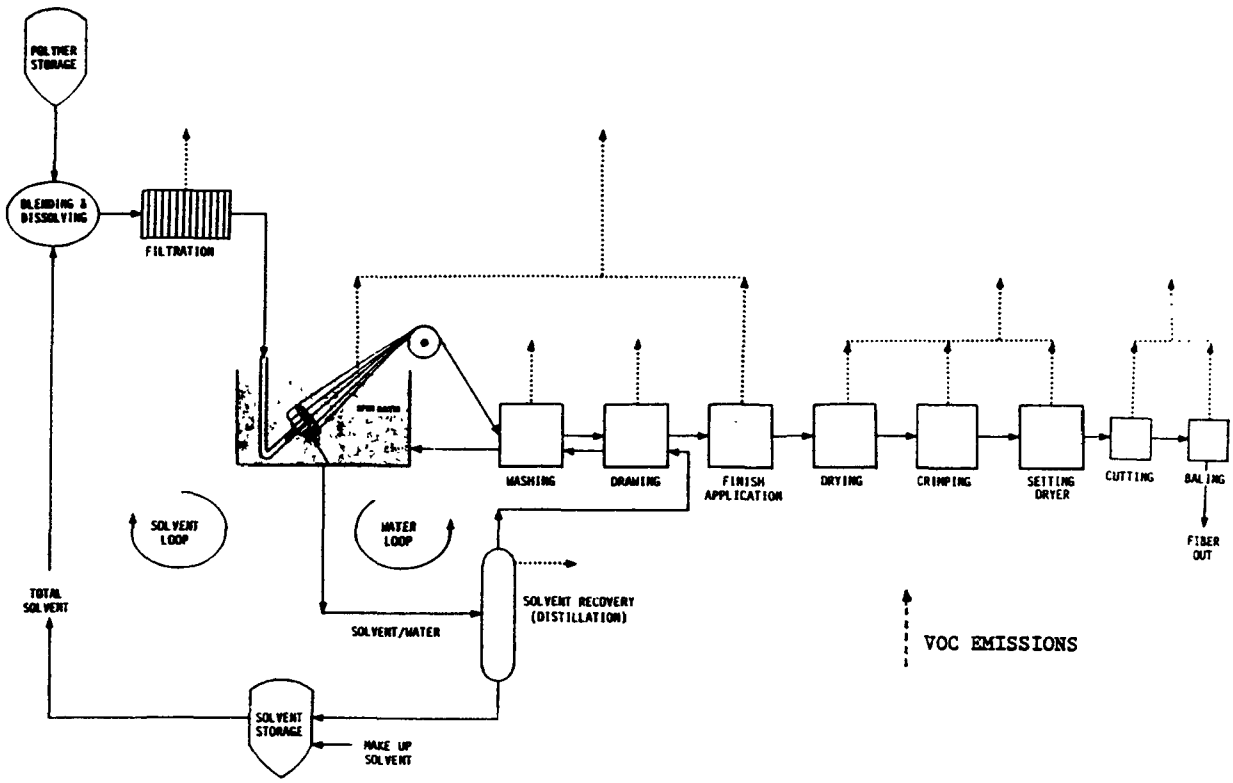

Figure 6.9-8. Acrylic fiber wet spinning.

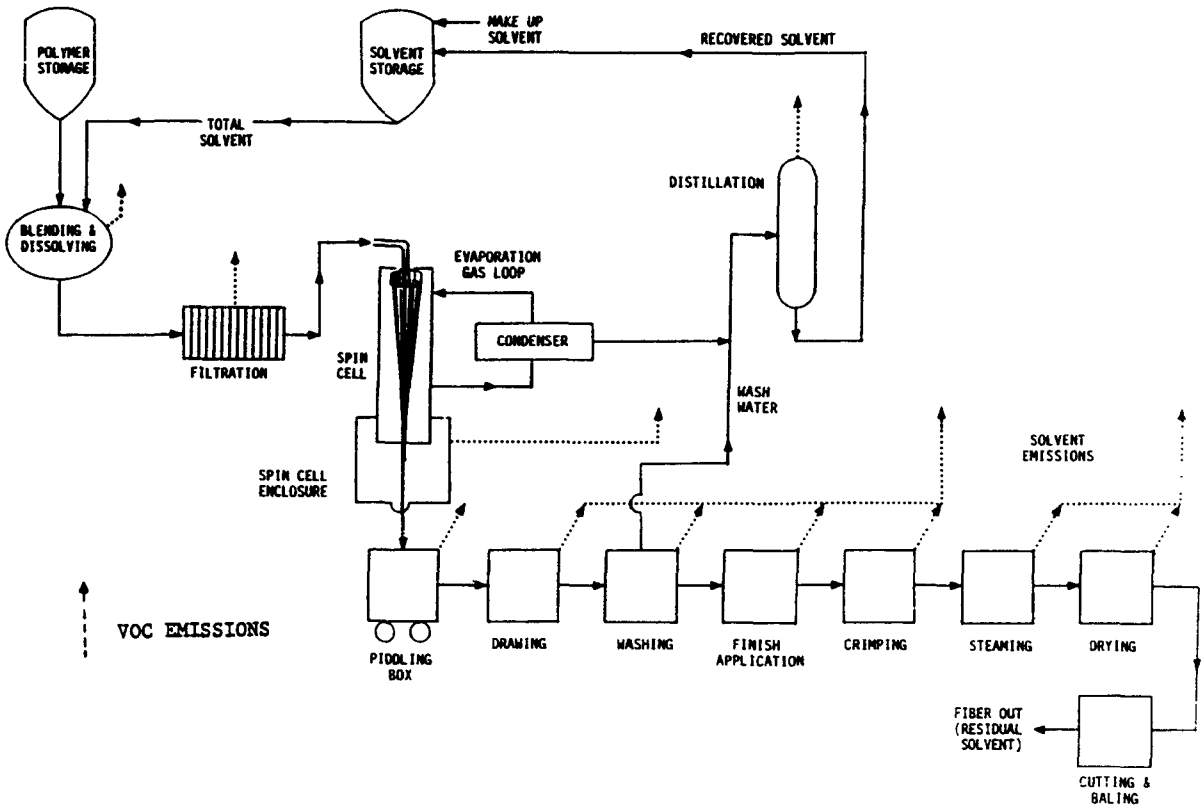

Figure 6.9-9. Acrylic fiber dry spinning.

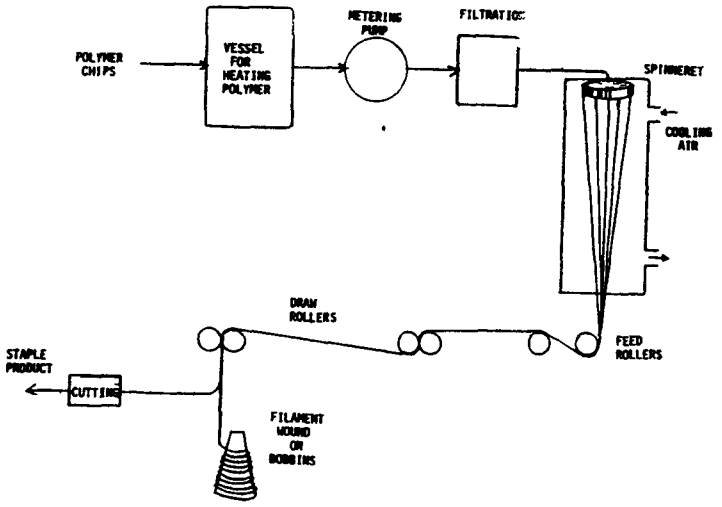

Figure 6.9-10. Nylon production.

fibers during the spinning process are vaporized during post-spinning processes and, in some instances such as the hot drawing of nylon 6, are vented to fabric filters, scrubbers and/or electrostatic precipitators.

6.9.5.4 Polyolefin Fiber Process Description[2,5,28-30] -

Polyolefin fibers are molecularly oriented extrusions of highly crystalline olefinic polymers, predominantly polypropylene. Melt spinning of polypropylene is the method of choice because the high degree of polymerization makes wet spinning or dissolving of the polymer difficult. The fiber spinning and processing procedures are generally the same as described earlier for melt spinning. Polypropylene is also manufactured by the split film process in which it is extruded as a film and then stretched and split into flat filaments, or narrow tapes, that are twisted or wound into a fiber. Some fibers are manufactured as a combination of nylon and polyolefin polymers being melted together in a ratio of about 20 percent nylon 6 and 80 percent polyolefin such as polypropylene, and being spun from this melt. Polypropylene is processed more like nylon 6 than nylon 66 because of the lower melting point of 203°C (397°F) for nylon 6 versus 263°C (505°F) for nylon 66. The polyolefin fiber production process is shown in Figure 6.9-11.

Emissions And Controls -

Limited information is available on emissions from the actual spinning or processing of polyolefin fibers. The available data quantify and describe the emissions from the extruder/pelletizer stage, the last stage of polymer manufacture, and from just before the melting of the polymer for spinning. VOC content of the dried polymer after extruding and pelletizing was found to be as much as 0.5 weight percent. Assuming the content is as high as 0.5 percent and that all this VOC is lost in the extrusion and processing of the fiber (melting, spinning, drawing, winding, etc.), there would be 5 pounds of VOC emissions per 1,000 pounds of polyolefin fiber. The VOCs in the dried polymer are hexane, propane, and methanol, and the approximate proportions are 1.6 pounds of hexane, 1.6 pounds of propane, and 1.8 pounds of methanol.

During processing, lubricant and finish oils are added to the fiber, and some of these additives are driven off in the form of aerosols during processing. No specific information has been obtained

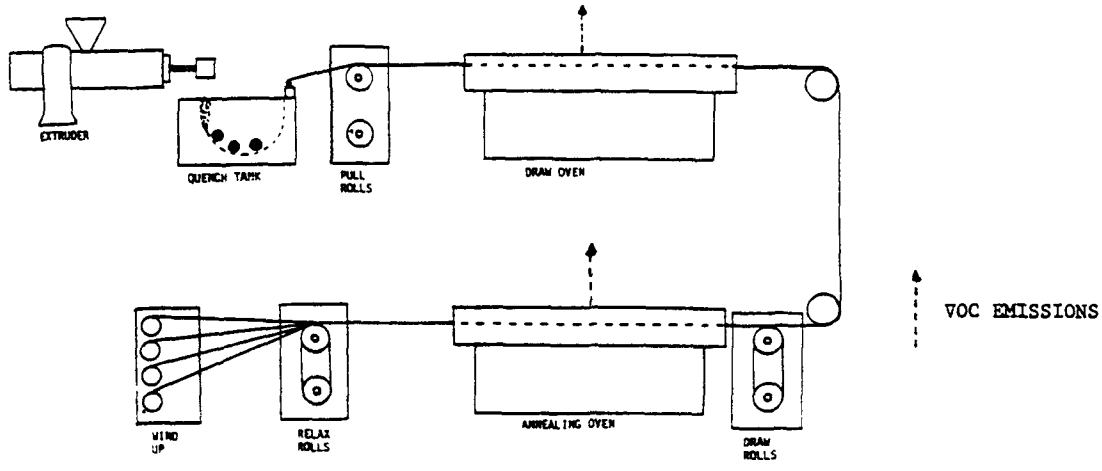

Figure 6.9-11. Polyolefin fiber production.

to describe the oil aerosol emissions for polyolefin processing, but certain assumptions may be made to provide reasonably accurate values. Because polyolefins are melt spun similarly to other melt spun fibers (nylon 6, nylon 66, polyester, etc.), a fiber similar to the polyolefins would exhibit similar emissions. Processing temperatures are similar for polyolefins and nylon 6. Thus, aerosol emission values for nylon 6 can be assumed valid for polyolefins.

6.9.5.5 Spandex Fiber Manufacturing Process Description[5,31-33] -

Spandex is a generic name for a polyurethane fiber in which the fiber-forming substance is a long chain of synthetic polymer comprised of at least 85 percent of a segmented polyurethane. In between the urethane groups, there are long chains that may be polyglycols, polyesters, or polyamides. Being spun from a polyurethane (a rubber-like material), spandex fibers are elastomeric, that is, they stretch. Spandex fibers are used in such stretch fabrics as belts, foundation garments, surgical stockings, and stocking tops.

Spandex is produced by 2 different processes in the United States. One process is similar in some respects to that used for acetate textile yarn, in that the fiber is dry spun, immediately wound onto takeup bobbins, and then twisted or processed in other ways. This process is referred to as dry spinning. The other process, which uses reaction spinning, is substantially different from any other fiber forming process used by domestic synthetic fiber producers.

6.9.5.6 Spandex Dry Spun Process Description -

This manufacturing process, which is illustrated in Figure 6.9-12, is characterized by use of solution polymerization and dry spinning with an organic solvent. Tetrahydrofuran is the principal raw material. The compound's molecular ring structure is opened, and the resulting straight chain compound is polymerized to give a low molecular weight polymer. This polymer is then treated with an excess of a di-isocyanate. The reactant, with any unreacted di-isocyanate, is next reacted with some diamine, with monoamine added as a stabilizer. This final polymerization stage is carried out in dimethylformamide solution, and then the spandex is dry spun from this solution. Immediately after spinning, spandex yarn is wound onto a bobbin as continuous filament yarn. This yarn is later transferred to large spools for shipment or for further processing in another part of the plant.

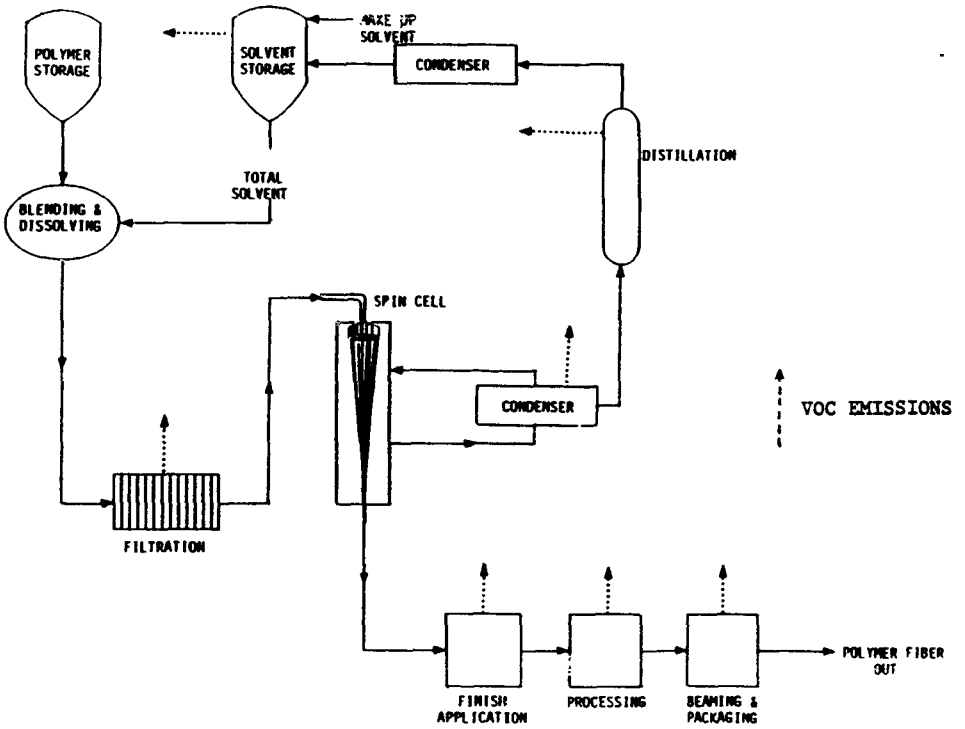

Figure 6.9-12. Spandex dry spinning.

Emissions And Controls -

The major emissions from the spandex dry spinning process are volatilized solvent losses, which occur at a number of points of production. Solvent emissions occur during filtering of the spin dope, spinning of the fiber, treatment of the fiber after spinning, and the solvent recovery process. The emission points from this process are also shown in Figure 6.9-12.

Total emissions from spandex fiber dry spinning are considerably lower than from other dry spinning processes. It appears that the single most influencing factor that accounts for the lower emissions is that, because of nature of the polymeric material and/or spinning conditions, the amount of residual solvent in the fiber as it leaves the spin cell is considerably lower than other dry spun fibers. This situation may be because of the lower solvent/polymer ratio that is used in spandex dry spinning. Less solvent is used for each unit of fiber produced relative to other fibers. A condensation system is used to recover solvent emissions from the spin cell exhaust gas. Recovery of solvent emissions from this process is as high as 99 percent. Since the residual solvent in the fiber leaving the spin cell is much lower than for other fiber types, the potential for economic capture and recovery is also much lower. Therefore, these post-spinning emissions, which are small, are not controlled.

6.9.5.7 Spandex Reaction Spun Process Description -

In the reaction spun process, a polyol (typically polyester) is reacted with an excess of di-isocynate to form the urethane prepolymer, which is pumped through spinnerettes at a constant rate into a bath of dilute solution of ethylenediamine in toluene. The ethylenediamine reacts with isocyanate end groups on the resin to form long-chain cross-linked polyurethane elastomeric fiber. The final cross-linking reaction takes place after the fiber has been spun. The fiber is transported from the bath to an oven, where solvent is evaporated. After drying, the fiber is lubricated and is wound on tubes for shipment.

Emissions And Controls -

Essentially all air that enters the spinning room is drawn into the hooding that surrounds the process equipment and then leads to a carbon adsorption system (see Figure 6.9-13). The oven is also vented to the carbon adsorber. The gas streams from the spinning room and oven are combined and cooled in a heat exchanger before they enter the activated carbon bed.

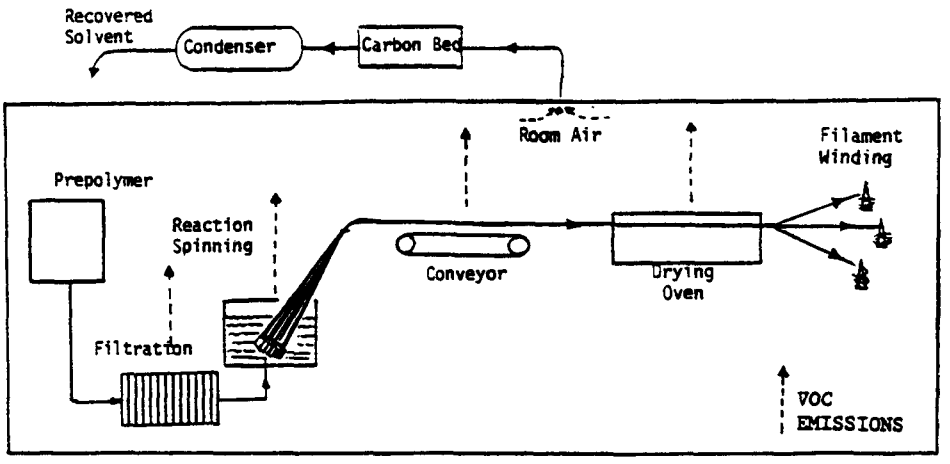

Figure 6.9-13. Spandex reaction spinning.

6.9.5.8 Vinyon Fiber Process Description[5,34] -

Vinyon is a copolymer of vinyl chloride (88 percent) and vinyl acetate (12 percent). The polymer is dissolved in a ketone (acetone or methyl ethyl ketone) to make a 23 weight percent spinning solution. After filtering, the solution is extruded as filaments into warm air to evaporate the solvent and to allow its recovery and reuse. The spinning process is similar to that of cellulose acetate. After spinning, the filaments are stretched to achieve molecular orientation to impart strength.

Emissions And Controls -

Emissions occur at steps similar to those of cellulose acetate, at dope preparation and spinning, and as fugitive emissions from the spun fiber during processes such as winding and stretching. The major source of VOCs is the spinning step, where the warm air stream evaporates the solvent. This air/solvent stream is sent to either a scrubber or carbon adsorber for solvent recovery. Emissions may also occur at the exhausts from these control devices.

6.9.5.9 Other Fibers -

There are synthetic fibers manufactured on a small volume scale relative to the commodity fibers. Because of the wide variety of these fiber manufacturing processes, specific products and processes are not discussed. Table 6.9-3 lists some of these fibers and the respective producers.

Table 6.9-3. OTHER SYNTHETIC FIBERS AND THEIR MAKERS

Fiber	Manufacturer
Nomex (aramid)	DuPont
Kevlar (aramid)	DuPont
PBI (polybenzimidazole)	Celanese
Kynol (novoloid)	Carborundum
Teflon	DuPont

GLOSSARY

Crimping: A process in which waves and angles are set into fibers, such as acrylic fiber filaments, to help simulate properties of natural fibers.

Coagulant: A substance, either a salt or an acid, used to precipitate polymer solids out of emulsions or latexes.

Continuous filament yarn: Very long fibers that have been converged to form a multifiber yarn, typically consisting of 15 to 100 filaments.

Cutting: Refers to the conversion of tow to staple fiber.

Delusterant: Fiber finishing additives (typically clays or barium sulfate) used to dull the surfaces of the fibers.

Dope: The polymer, either in molten form or dissolved in solvent, that is spun into fiber.

Drawing: The stretching of the filaments in order to increase the fiber's strength; also makes the fiber more supple and unshrinkable (that is, the stretch is irreversible). The degree of stretching varies with the yarn being spun.

Filament: The solidified polymer that has emerged from a single hole or orifice in a spinnerette.

Filament yarn: See continuous filament yarn.

Heat setting: The dimensional stabilization of the fibers with heat so that the fibers are completely undisturbed by subsequent treatments such as washing or dry cleaning at a lower temperature. To illustrate, heat setting allows a pleat to be retained in the fabric while helping prevent undesirable creases later in the life of the fabric.

Lubrication: The application of oils or similar substances to the fibers in order, for example, to facilitate subsequent handling of the fibers and to provide static suppression.

Spinnerette:	A spinnerette is used in the production of all man-made fiber whereby liquid is forced through holes. Filaments emerging from the holes are hardened and solidified. The process of extrusion and hardening is called spinning.
Spun yarn:	Yarn made from staple fibers that have been twisted or spun together into a continuous strand.
Staple:	Lengths of fiber made by cutting man-made fiber tow into short (1- to 6-inch) and usually uniform lengths, which are subsequently twisted into spun yarn.
Tow:	A collection of many (often thousands) parallel, continuous filaments, without twist, that are grouped together in a rope-like form having a diameter of about one-quarter inch.
Twisting:	Giving the filaments in a yarn a very slight twist that prevents the fibers from sliding over each other when pulled, thus increasing the strength of the yarn.

References For Section 6.9

1. *Man-made Fiber Producer's Base Book*, Textile Economics Bureau Incorporated, New York, NY, 1977.

2. "Fibers 540.000", *Chemical Economics Handbook*, Menlo Park, CA, March 1978.

3. *Industrial Process Profiles For Environmental Use - Chapter 11 - The Synthetic Fiber Industry*, EPA Contract No. 68-02-1310, Aeronautical Research Associates of Princeton, Princeton, NJ, November 1976.

4. R. N. Shreve, *Chemical Process Industries*, McGraw-Hill Book Company, New York, NY, 1967.

5. R. W. Moncrief, *Man-made Fibers*, Newes-Butterworth, London, 1975.

6. *Guide To Man-made Fibers*, Man-made Fiber Producers Association, Inc. Washington, DC, 1977.

7. "Trip Report/Plant Visit To American Enka Company, Lowland, Tennessee", Pacific Environmental Services, Inc., Durham, NC, January 22, 1980.

8. "Report Of The Initial Plant Visit To Avtex Fibers, Inc., Rayon Fiber Division, Front Royal, VA", Pacific Environmental Services, Inc., Durham, NC, January 15, 1980.

9. "Fluidized Recovery System Nabs Carbon Disulfide", *Chemical Engineering*, *70*(8):92-94, April 15, 1963.

10. Standards Of Performance For Synthetic Fibers NSPS, Docket No. A-80-7, II-B-83, "Viscose Rayon Fiber Production - Phase I Investigation", U. S. Environmental Protection Agency, Washington, DC, February 25, 1980.

11. "Report Of The Initial Plant Visit To Tennessee Eastman Company Synthetic Fibers Manufacturing", Kingsport, TN, Pacific Environmental Services, Inc., Durham, NC, December 13, 1979.

12. "Report Of The Phase II Plant Visit To Celanese's Celriver Acetate Plant In Rock Hill, SC", Pacific Environmental Services, Inc., Durham, NC, May 28, 1980.

13. "Report Of The Phase II Plant Visit To Celanese's Celco Acetate Fiber Plant In Narrows, VA", Pacific Environmental Services, Inc., Durham, NC, August 11, 1980.

14. Standards Of Performance For Synthetic Fibers NSPS, Docket No. A-80-7, II-I-43, U. S. Environmental Protection Agency, Washington, DC, December 1979.

15. E. Welfers, "Process And Machine Technology Of Man-made Fibre Production", *International Textile Bulletin*, World Spinning Edition, Schlieren/Zurich, Switzerland, February 1978.

16. Written communication from R. B. Hayden, E. I. duPont de Nemours and Co., Wilmington, DE, to E. L. Bechstein, Pullman, Inc., Houston, TX, November 8, 1978.

17. Written communication from E. L. Bechstein, Pullman, Inc., Houston, TX, to R. M. Clowers, U. S. Environmental Protection Agency, Research Triangle Park, NC, November 17, 1978.

18. "Report Of The Plant Visit To Badische Corporation's Synthetic Fibers Plant In Williamsburg, VA", Pacific Environmental Services, Inc., Durham, NC, November 28, 1979.

19. "Report Of The Initial Plant Visit To Monsanto Company's Plant In Decatur, AL", Pacific Environmental Services, Inc., Durham, NC, April 1, 1980.

20. "Report Of The Initial Plant Visit To American Cyanamid Company", Pacific Environmental Services, Inc., Durham, NC, April 11, 1980.

21. Written communication from G. T. Esry, E. I. duPont de Nemours and Co., Wilmington, DE, to D. R. Goodwin, U. S. Environmental Protection Agency, Research Triangle Park, NC, July 7, 1978.

22. "Report Of The Initial Visit To duPont's Acrylic Fiber Plant In Waynesboro, VA", Pacific Environmental Services, Inc., Durham, NC, May 1, 1980.

23. "Report Of The Phase II Plant Visit To duPont's Acrylic Fiber May Plant In Camden, SC", Pacific Environmental Services, Inc., Durham, NC, August 8, 1980.

24. C. N. Click and D. K. Webber, *Polymer Industry Ranking By VOC Emission Reduction That Would Occur From New Source Performance Standards*, EPA Contract No. 68-02-2619, Pullman, Inc., Houston, TX, August 30, 1979.

25. Written communication from E. L. Bechstein, Pullman, Inc., Houston, TX, to R. M. Clowers, U. S. Environmental Protection Agency, Research Triangle Park, NC, November 28, 1978.

26. Written communication from R. B. Hayden, E. I. duPont de Nemours and Co., Wilmington, DE, to W. Talbert, Pullman, Inc., Houston, TX, October 17, 1978.

27. "Report Of The Initial Plant Visit To Allied Chemical's Synthetic Fibers Division", Chesterfield, VA, Pacific Environmental Services, Inc., Durham, NC, November 27, 1979.

28. *Background Information Document — Polymers And Resins Industry*, EPA-450/3-83-019a, U. S. Environmental Protection Agency, Research Triangle Park, NC, January 1984.

29. H. P. Frank, Polypropylene, Gordon and Breach Science Publishers, New York, NY, 1968.

30. A. V. Galanti and C. L. Mantell, *Polypropylene — Fibers and Films*, Plenum Press, New York, NY, 1965.

31. D. W. Crumpler, "Trip Report — Plant Visit To Globe Manufacturing Company", D. Crumpler, U. S. Environmental Protection Agency, Research Triangle Park, NC, September 16 and 17, 1981.

32. "Standards Of Performance For Synthetic Fibers NSPS, Docket No. A-80-7, II-I-115, Lycra Reamout Plan", U. S. Environmental Protection Agency, Washington, DC, May 10, 1979.

33. "Standards Of Performance For Synthetic Fibers NSPS, Docket No. A-80-7, II-I-95", U. S. Environmental Protection Agency, Washington, DC, March 2, 1982.

34. Written communication from W. K. Mohney, Avtex Fibers, Inc., Meadville, PA, to R. Manley, Pacific Environmental Services, Durham, NC, April 14, 1981.

35. Personal communication from J. H. Cosgrove, Avtex Fibers, Inc., Front Royal, VA, to R. Manley, Pacific Environmental Services, Inc., Durham, NC, November 29, 1982.

36. Written communication from T. C. Benning, Jr., American Enka Co., Lowland, TN, to R. A. Zerbonia, Pacific Environmental Services, Inc., Durham, NC, February 12, 1980.

37. Written communication from R. O. Goetz, Virginia State Air Pollution Control Board, Richmond, VA, to Director, Region II, Virginia State Air Pollution Control Board, Richmond, VA, November 22, 1974.

38. Written communication from H. S. Hall, Avtex Fibers, Inc., Valley Forge, PA, to J. R. Farmer, U. S. Environmental Protection Agency, Research Triangle Park, NC, December 12, 1980.

39. Written communication from J. C. Pullen, Celanese Fibers Co., Charlotte, NC, to R. A. Zerbonia, Pacific Environmental Services, Inc., Durham, NC, July 3, 1980.

40. Written communication from J. C. Pullen, Celanese Fibers Co., Charlotte, NC, to National Air Pollution Control Techniques Advisory Committee, U. S. Environmental Protection Agency, Research Triangle Park, NC, September 8, 1981.

41. "Report Of The Initial Plant Visit To Tennessee Eastman Company Synthetic Fibers Manufacturing, Kingsport, TN", Pacific Environmental Services, Inc., Durham, NC, December 13, 1979.

42. Written communication from J. C. Edwards, Tennessee Eastman Co., Kingsport, TN, to R. Zerbonia, Pacific Environmental Services, Inc., Durham, NC, April 28, 1980.

43. Written communication from C. R. Earnhart, E. I. duPont de Nemours and Co., Camden, SC, to D. W. Crumpler, U. S. Environmental Protection Agency, Research Triangle Park, NC, November 5, 1981.

44. C. N. Click and D. K. Weber, *Emission Process And Control Technology Study Of The ABS/SAN Acrylic Fiber and NBR Industries*, EPA Contract No. 68-02-2619, Pullman, Inc., Houston, TX, April 20, 1979.

45. Written communication from D. O. Moore, Jr., Pullman, Inc., Houston, TX, to D. C. Mascone, U. S. Environmental Protection Agency, Research Triangle Park, NC, April 18, 1979.

46. Written communication from W. M. Talbert, Pullman, Inc., Houston, TX, to R. J. Kucera, Monsanto Textiles Co., Decatur, AL, July 17, 1978.

47. Written communication from M. O. Johnson, Badische Corporation, Williamsburg, VA, to D. R. Patrick, U. S. Environmental Protection Agency, Research Triangle Park, NC, June 1, 1979.

48. Written communication from J. S. Lick, Badische Corporation, Williamsburg, VA, to D. R. Goodwin, U. S. Environmental Protection Agency, Research Triangle Park, NC, May 14, 1980.

49. P. T. Wallace, "Nylon Fibers", *Chemical Economics Handbook*, Stanford Research Institute, Menlo Park, CA, December 1977.

50. Written communication from R. Legendre, Globe Manufacturing Co., Fall River, MA, to Central Docket Section, U. S. Environmental Protection Agency, Washington, DC, August 26, 1981.

51. Written communication from R. Legendre, Globe Manufacturing Co., Fall River, MA, to J. Farmer, U. S. Environmental Protection Agency, Research Triangle Park, NC, June 26, 1980.

52. Written communication from R. H. Hughes, Avtex Fibers Co., Valley Forge, PA, to R. Manley, Pacific Environmental Services, Inc., Durham, NC, February 28, 1983.

53. "Report Of The Phase II Plant Visit, DuPont's Acrylic Fiber May Plant In Camden, SC", Pacific Environmental Services, Inc., Durham, NC, April 29, 1980.

6.10 Synthetic Rubber

6.10.1 Emulsion Styrene-Butadiene Copolymers

6.10.1.1 General -

Two types of polymerization reaction are used to produce styrene-butadiene copolymers, the emulsion type and the solution type. This section addresses volatile organic compound (VOC) emissions from the manufacture of copolymers of styrene and butadiene made by emulsion polymerization processes. The emulsion products can be sold in either a granular solid form, known as crumb, or in a liquid form, known as latex.

Copolymers of styrene and butadiene can be made with properties ranging from those of a rubbery material to those of a very resilient plastic. Copolymers containing less than 45 weight percent styrene are known as styrene-butadiene rubber (SBR). As the styrene content is increased over 45 weight percent, the product becomes increasingly more plastic.

6.10.1.2 Emulsion Crumb Process -

As shown in Figure 6.10-1, fresh styrene and butadiene are piped separately to the manufacturing plant from the storage area. Polymerization of styrene and butadiene proceeds continuously through a train of reactors, with a residence time in each reactor of approximately 1 hour. The reaction product formed in the emulsion phase of the reaction mixture is a milky white emulsion called latex. The overall polymerization reaction ordinarily is not carried out beyond a 60 percent conversion of monomers to polymer, because the reaction rate falls off considerably beyond this point and product quality begins to deteriorate.

Because recovery of the unreacted monomers and their subsequent purification are essential to economical operation, unreacted butadiene and styrene from the emulsion crumb polymerization process normally are recovered. The latex emulsion is introduced to flash tanks where, using vacuum flashing, the unreacted butadiene is removed. The butadiene is then compressed, condensed, and pumped back to the tank farm storage area for subsequent reuse. The condenser tail gases and noncondensables pass through a butadiene adsorber/desorber unit, where more butadiene is recovered. Some noncondensables and VOC vapors pass to the atmosphere or, at some plants, to a flare system. The latex stream from the butadiene recovery area is then sent to the styrene recovery process, usually taking place in perforated plate steam stripping columns. From the styrene stripper, the latex is stored in blend tanks.

From this point in the manufacturing process, latex is processed continuously. The latex is pumped from the blend tanks to coagulation vessels, where dilute sulfuric acid (H_2SO_4 of pH 4 to 4.5) and sodium chloride solution are added. The acid and brine mixture causes the emulsion to break, releasing the styrene-butadiene copolymer as crumb product. The coagulation vessels are open to the atmosphere.

Leaving the coagulation process, the crumb and brine acid slurry is separated by screens into solid and liquid. The crumb product is processed in rotary presses that squeeze out most of the entrained water. The liquid (brine/acid) from the screening area and the rotary presses is cycled to the coagulation area for reuse.

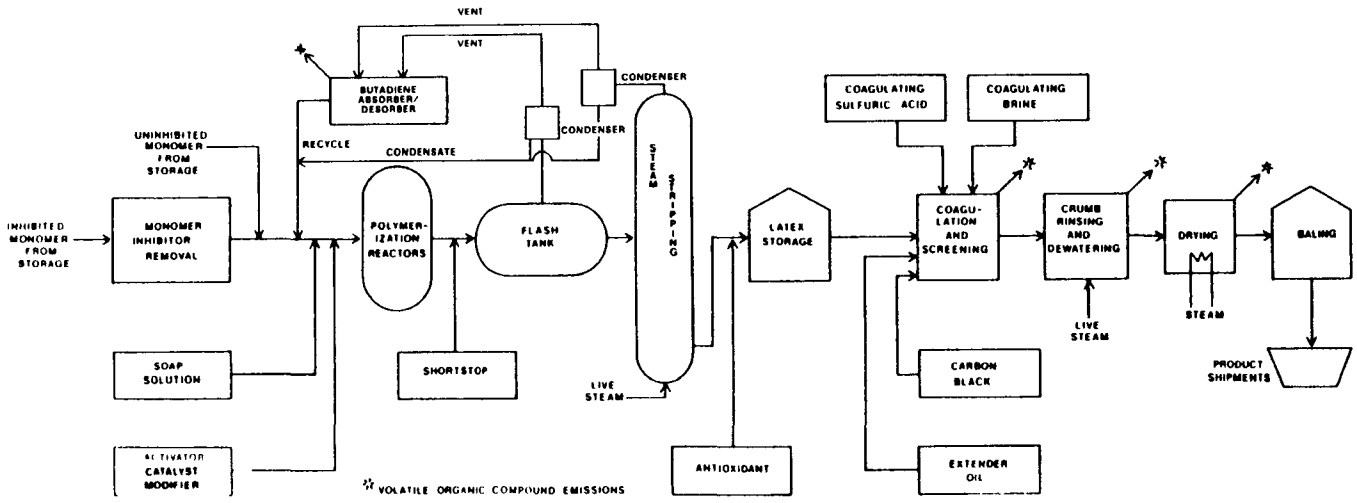

Figure 6.10-1. Typical process for crumb production by emulsion polymerization.

The partially dried crumb is then processed in a continuous belt dryer that blows hot air at approximately 93°C (200°F) across the crumb to complete the drying of the product. Some plants have installed single-pass dryers, where space permits, but most plants still use the triple-pass dryers, which were installed as original equipment in the 1940s. The dried product is baled and weighed before shipment.

6.10.1.3 Emulsion Latex Process -

Emulsion polymerization can also be used to produce latex products. These latex products have a wider range of properties and uses than do the crumb products, but the plants are usually much smaller. Latex production, shown in Figure 6.10-2, follows the same basic processing steps as emulsion crumb polymerization, with the exception of final product processing.

As in emulsion crumb polymerization, the monomers are piped to the processing plant from the storage area. The polymerization reaction is taken to near completion (98 to 99 percent conversion), and the recovery of unreacted monomers is therefore uneconomical. Process economy is directed towards maximum conversion of the monomers in one process trip.

Because most emulsion latex polymerization is done in a batch process, the number of reactors used for latex production is usually smaller than for crumb production. The latex is sent to a blowdown tank where, under vacuum, any unreacted butadiene and some unreacted styrene are removed from the latex. If the unreacted styrene content of the latex has not been reduced sufficiently to meet product specifications in the blowdown step, the latex is introduced to a series of steam stripping steps to reduce the content further. Any steam and styrene vapor from these stripping steps is taken overhead and is sent to a water-cooled condenser. Any uncondensables leaving the condenser are vented to the atmosphere.

After discharge from the blowdown tank or the styrene stripper, the latex is stored in process tanks. Stripped latex is passed through a series of screen filters to remove unwanted solids and is stored in blending tanks, where antioxidants are added and mixed. Finally, latex is pumped from the blending tanks to be packaged into drums or to be bulk loaded into railcars or tank trucks.

6.10.2 Emissions And Controls

Emission factors for emulsion styrene-butadiene copolymer production processes are presented in Table 6.10-1.

In the emulsion crumb process, uncontrolled noncondensed tail gases (VOCs) pass through a butadiene absorber control device, which is 90 percent efficient, to the atmosphere or, in some plants, to a flare stack.

No controls are presently employed for the blend tank and/or coagulation tank areas, on either crumb or latex facilities. Emissions from dryers in the crumb process and the monomer removal part of the latex process do not employ control devices.

Individual plant emissions may vary from the average values listed in Table 6.10-1 with facility age, size, and plant modification factors.

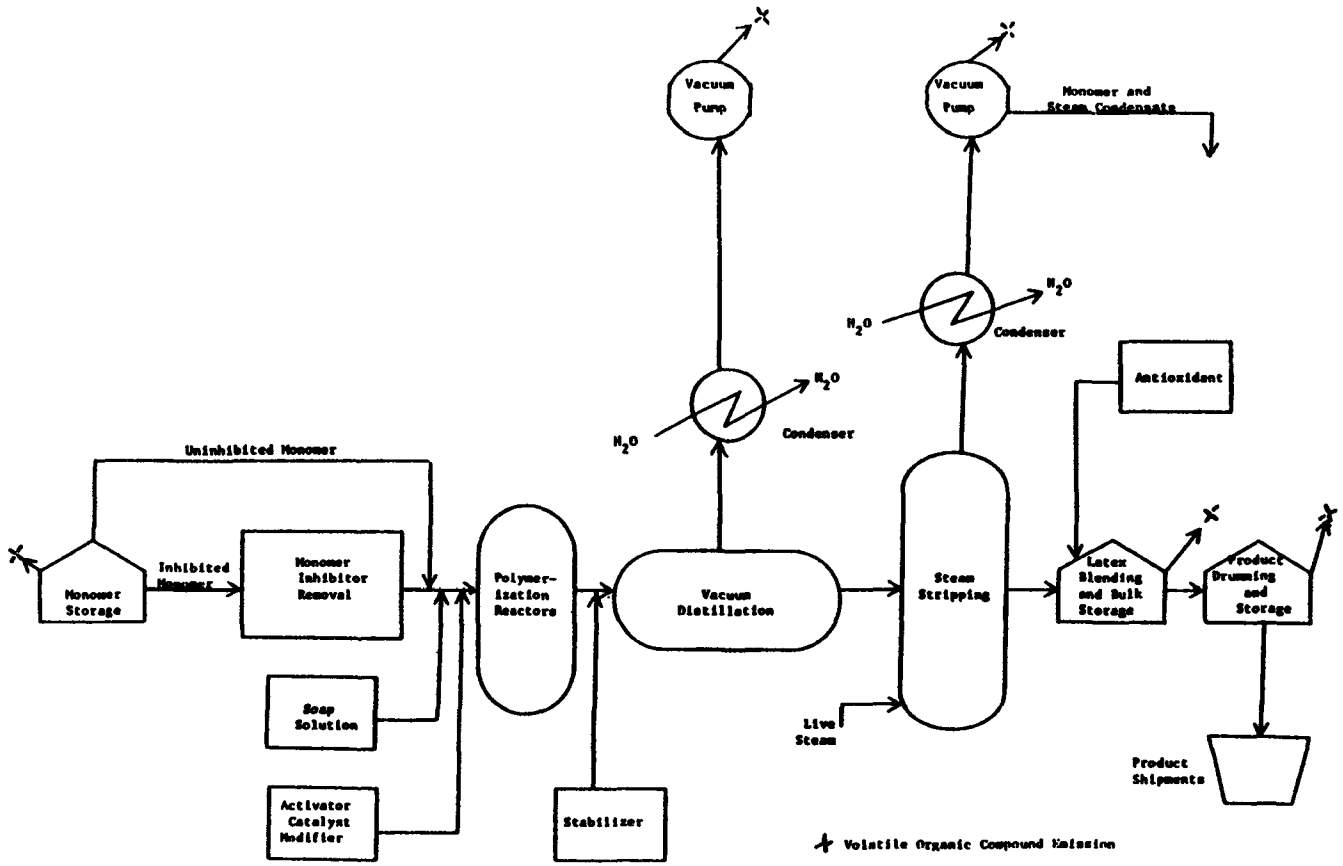

Figure 6.10-2. Typical process for latex production by emulsion polymerization.

Table 6.10-1 (Metric And English Units). EMISSION FACTORS FOR EMULSION STYRENE-BUTADIENE COPOLYMER PRODUCTION[a]

EMISSION FACTOR RATING: B

Process	Volatile Organic Emissions[b]	
	g/kg	lb/ton
Emulsion Crumb		
Monomer recovery, uncontrolled[c]	2.6	5.2
Absorber vent	0.26	0.52
Blend/coagulation tank, uncontrolled[d]	0.42	0.84
Dryers[e]	2.51	5.02
Emulsion Latex		
Monomer removal condenser vent[f]	8.45	16.9
Blend tanks, uncontrolled[f]	0.1	0.2

[a] Nonmethane VOC, mainly styrene and butadiene. For emulsion crumb and emulsion latex processes only. Factors for related equipment and operations (storage, fugitives, boilers, etc.) are presented in other sections of AP-42.
[b] Expressed as units per unit of copolymer produced.
[c] Average of 3 industry-supplied stack tests.
[d] Average of 1 industry stack test and 2 industry-supplied emission estimates.
[e] No controls available. Average of 3 industry-supplied stack tests and 1 industry estimate.
[f] EPA estimates from industry supplied data, confirmed by industry.

References For Section 6.10

1. *Control Techniques Guideline* (Draft), EPA Contract No. 68-02-3168, GCA, Inc., Chapel Hill, NC, April 1981.

2. *Emulsion Styrene-Butadiene Copolymers: Background Document,* EPA Contract No. 68-02-3063, TRW Inc., Research Triangle Park, NC, May 1981.

3. Confidential written communication from C. Fabian, U. S. Environmental Protection Agency, Research Triangle Park, NC, to Styrene-Butadiene Rubber File (76/15B), July 16, 1981.

6.11 Terephthalic Acid

6.11.1 Process Description[1]

Terephthalic acid (TPA) is made by air oxidation of *p*-xylene and requires purification for use in polyester fiber manufacture. A typical continuous process for the manufacture of crude terephthalic acid (C-TPA) is shown in Figure 6.11-1. The oxidation and product recovery portion essentially consists of the Mid-Century oxidation process, whereas the recovery and recycle of acetic acid and recovery of methyl acetate are essentially as practiced by dimethyl terephthalate (DMT) technology. The purpose of the DMT process is to convert the terephthalic acid contained in C-TPA to a form that will permit its separation from impurities. C-TPA is extremely insoluble in both water and most common organic solvents. Additionally, it does not melt, it sublimes. Some products of partial oxidation of *p*-xylene, such as *p*-toluic acid and *p*-formyl benzoic acid, appear as impurities in TPA. Methyl acetate is also formed in significant amounts in the reaction.

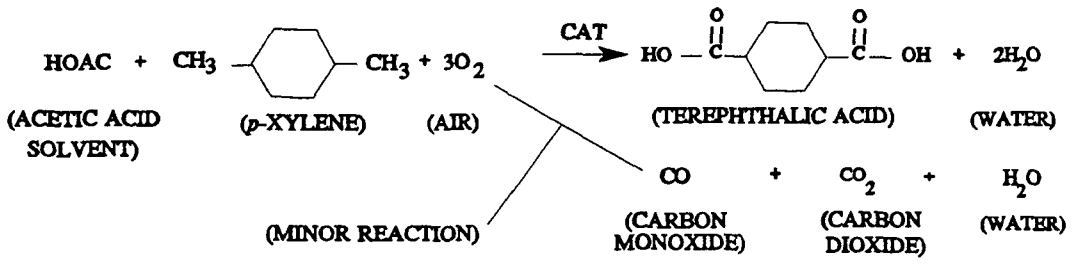

6.11.1.1 C-TPA Production -

Oxidation Of *p*-Xylene -

p-Xylene (stream 1 of Figure 6.11-1), fresh acetic acid (2), a catalyst system such as manganese or cobalt acetate and sodium bromide (3), and recovered acetic acid are combined into the liquid feed entering the reactor (5). Air (6), compressed to a reaction pressure of about 2000 kPa (290 psi), is fed to the reactor. The temperature of the exothermic reaction is maintained at about 200°C (392°F) by controlling the pressure at which the reaction mixture is permitted to boil and form the vapor stream leaving the reactor (7).

Inert gases, excess oxygen, CO, CO_2, and volatile organic compounds (VOC) (8) leave the gas/liquid separator and are sent to the high-pressure absorber. This stream is scrubbed with water under pressure, resulting in a gas stream (9) of reduced VOC content. Part of the discharge from the high-pressure absorber is dried and is used as a source of inert gas (IG), and the remainder is passed through a pressure control valve and a noise silencer before being discharged to the atmosphere through process vent A. The underflow (23) from the absorber is sent to the azeotrope still for recovery of acetic acid.

Crystallization And Separation -

The reactor liquid containing TPA (10) flows to a series of crystallizers, where the pressure is relieved and the liquid is cooled by the vaporization and return of condensed VOC and water. The partially oxidized impurities are more soluble in acetic acid and tend to remain in solution, while TPA crystallizes from the liquor. The inert gas that was dissolved and entrained in the liquid under pressure is released when the pressure is relieved and is subsequently vented to the atmosphere along

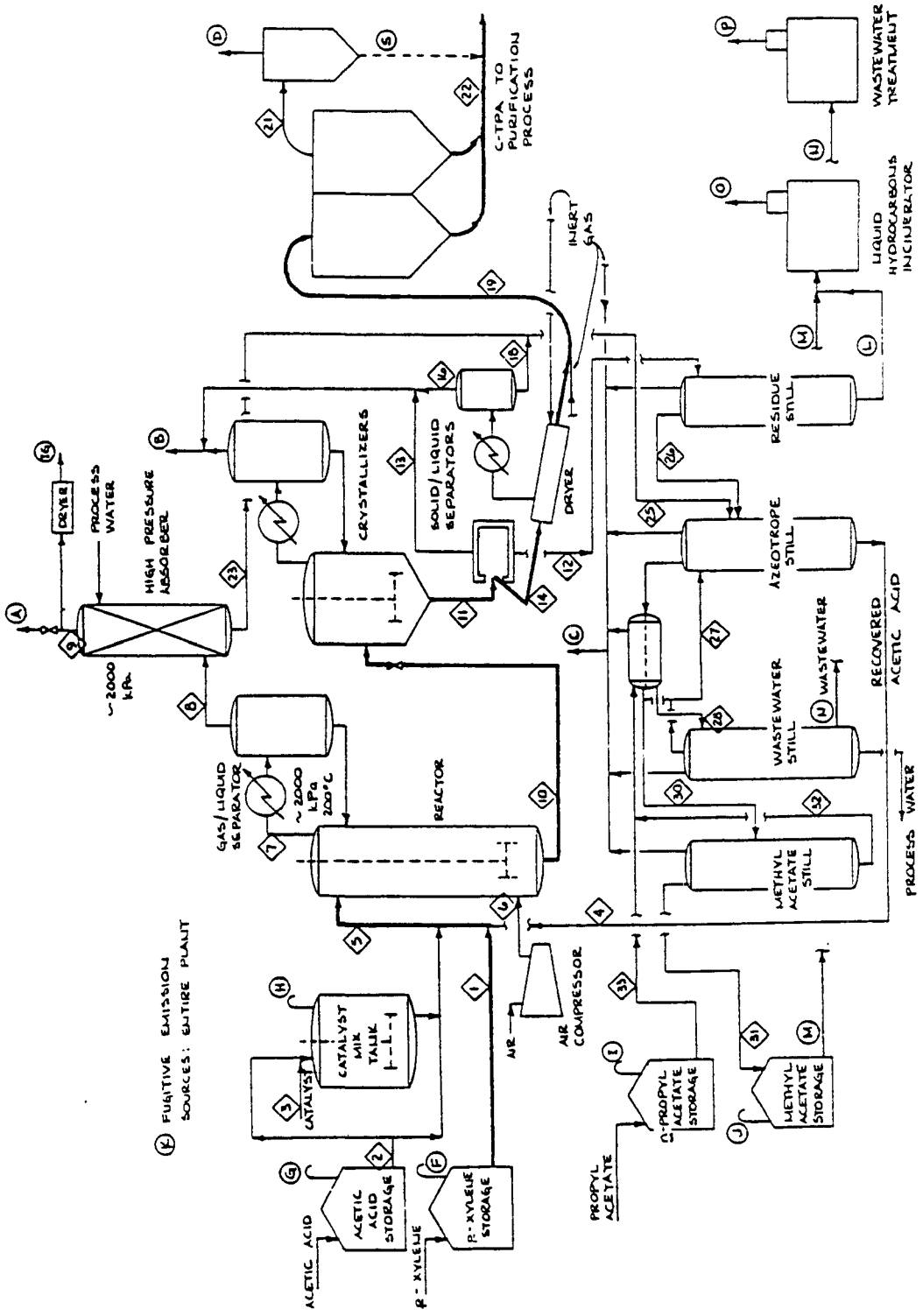

Figure 6.11-1. Crude terephthalic acid process.

with the contained VOC (B). The slurry (11) from the crystallizers is sent to solid/liquid separators, where the TPA is recovered as a wet cake (14). The mother liquor (12) from the solid/liquid separators is sent to the distillation section, while the vent gas (13) is discharged to the atmosphere (B).

Drying, Handling And Storage -

The wet cake (14) from solid/liquid separation is sent to dryers, where with the use of heat and IG, the moisture, predominately acetic acid, is removed leaving the product, C-TPA, as dry free-flowing crystals (19). IG is used to convey the product (19) to storage silos. The transporting gas (21) is vented from the silos to bag dust collectors to reduce its particulate loading, then is discharged to the atmosphere (D). The solids (S) from the bag filter can be forwarded to purification or can be incinerated.

Hot VOC-laden IG from the drying operation is cooled to condense and recover VOC (18). The cooled IG (16) is vented to the atmosphere (B), and the condensate (stream 18) is sent to the azeotrope still for recovery of acetic acid.

Distillation And Recovery -

The mother liquor (12) from solid/liquid separation flows to the residue still, where acetic acid, methyl acetate, and water are recovered overhead (26) and product residues are discarded. The overhead (26) is sent to the azeotrope still where dry acetic acid is obtained by using *n*-propyl acetate as the water-removing agent.

The aqueous phase (28) contains saturation amounts of *n*-propyl acetate and methyl acetate, which are stripped from the aqueous matter in the waste water still. Part of the bottoms product is used as process water in absorption, and the remainder (N) is sent to waste water treatment. A purge stream of the organic phase (30) goes to the methyl acetate still, where methyl acetate and saturation amounts of water are recovered as an overhead product (31) and are disposed of as a fuel (M). *n*-Propyl acetate, obtained as the bottoms product (32), is returned to the azeotrope still. Process losses of *n*-propyl acetate are made up from storage (33). A small amount of inert gas, which is used for blanketing and instrument purging, is emitted to the atmosphere through vent C.

6.11.1.2 C-TPA Purification -

The purification portion of the Mid-Century oxidation process involves the hydrogenation of C-TPA over a palladium-containing catalyst at about 232°C (450°F). High-purity TPA is recrystallized from a high-pressure water solution of the hydrogenated material.

The Olin-Mathieson manufacturing process is similar to the Mid-Century process except the former uses 95 percent oxygen, rather than air, as the oxidizing agent. The final purification step consists essentially of a continuous sublimation and condensation procedure. The C-TPA is combined with small quantities of hydrogen and a solid catalyst, dispersed in steam, and transported to a furnace. There the C-TPA is vaporized and certain of the contained impurities are catalytically destroyed. Catalyst and nonvolatile impurities are removed in a series of filters, after which the pure TPA is condensed and transported to storage silos.

6.11.2 Emissions And Controls[1-3]

A general characterization of the atmospheric emissions from the production of C-TPA is difficult because of the variety of processes. Emissions vary considerably, both qualitatively and quantitatively. The Mid-Century oxidation process appears to be one of the lowest polluters, and its predicted preeminence will suppress future emissions totals.

The reactor gas at vent A normally contains nitrogen (from air oxidation); unreacted oxygen; unreacted *p*-xylene; acetic acid (reaction solvent); carbon monoxide, carbon dioxide, and methyl acetate from oxidation of *p*-xylene and acetic acid not recovered by the high-pressure absorber; and water. The quantity of VOC emitted at vent A can vary with absorber pressure and the temperature of exiting vent gases. During crystallization of TPA and separation of crystallized solids from the solvent (by centrifuge or filters), noncondensable gases carrying VOC are released. These vented gases and the C-TPA dryer vent gas are combined and released to the atmosphere at vent B. Different methods used in this process can affect the amounts of noncondensable gases and accompanying VOCs emitted from this vent.

Gases released from the distillation section at vent C are the small amount of gases dissolved in the feed stream to distillation; the IG used in inert blanketing, instrument purging pressure control; and the VOC vapors carried by the noncondensable gases. The quantity of this discharge is usually small.

The gas vented from the bag filters on the product storage tanks (silos) (D) is dry, reaction-generated IG containing the VOC not absorbed in the high-pressure absorber. The vented gas stream contains a small quantity of TPA particulate that is not removed by the bag filters.

Performance of carbon adsorption control technology for a VOC gas stream similar to the reactor vent gas (A) and product transfer vent gas (D) has been demonstrated, but CO emissions will not be reduced. An alternative to the carbon adsorption system is a thermal oxidizer that provides reduction of both CO and VOC.

Emission sources and factors for the C-TPA process are presented in Table 6.11-1.

Table 6.11-1 (Metric Units). UNCONTROLLED EMISSION FACTORS FOR CRUDE TEREPHTHALIC ACID MANUFACTURE[a]

EMISSION FACTOR RATING: C

Emission Source	Stream Designation (Figure 6.11-1)	Emissions (g/kg)	
		Nonmethane VOC[b,c]	CO[c]
Reactor vent	A	15	17
Crystallization, separation, drying vent	B	1.9	NA
Distillation and recovery vent	C	1.1	NA
Product transfer vent[d]	D	1.8	2

[a] Factors are expressed as g of pollutant/kg of product produced. NA = not applicable.
[b] Reference 1. VOC gas stream consists of methyl acetate, *p*-xylene, and acetic acid. No methane was found.
[c] Reference 1. Typically, thermal oxidation results in >99% reduction of VOC and CO. Carbon adsorption gives a 97% reduction of VOC only (Reference 1).
[d] Stream contains 0.7 g of TPA particulates/kg. VOC and CO emissions originated in reactor offgas (IG) used for transfer.

References For Section 6.11

1. S. W. Dylewski, *Organic Chemical Manufacturing, Volume 7: Selected Processes*, EPA-450/3-80-028b, U. S. Environmental Protection Agency, Research Triangle Park, NC, January 1981.

2. D. F. Durocher, *et al.*, *Screening Study To Determine Need For Standards Of Performance For New Sources Of Dimethyl Terephthalate And Terephthalic Acid Manufacturing*, EPA Contract No. 68-02-1316, Radian Corporation, Austin, TX, July 1976.

3. J. W. Pervier, *et al.*, *Survey Reports On Atmospheric Emissions From The Petrochemical Industry, Volume II*, EPA-450/3-73-005b, U. S. Environmental Protection Agency, Research Triangle Park, NC, April 1974.

6.12 Lead Alkyl

6.12.1 Process Description[1]

Two alkyl lead compounds, tetraethyl lead (TEL) and tetramethyl lead (TML), are used as antiknock gasoline additives. Over 75 percent of the 1973 additive production was TEL, more than 90 percent of which was made by alkylation of sodium/lead alloy.

Lead alkyl is produced in autoclaves by the reaction of sodium/lead alloy with an excess of either ethyl (for TEL) or methyl (for TML) chloride in the presence of an acetone catalyst. The reaction mass is distilled to separate the product, which is then purified, filtered, and mixed with chloride/bromide additives. Residue is sluiced to a sludge pit, from which the bottoms are sent to an indirect steam dryer, and the dried sludge is fed to a reverberatory furnace to recover lead.

Gasoline additives are also manufactured by the electrolytic process, in which a solution of ethyl (or methyl) magnesium chloride and ethyl (or methyl) chloride is electrolyzed, with lead metal as the anode.

6.12.2 Emissions And Controls[1]

Lead emissions from the sodium/lead alloy process consist of particulate lead oxide from the recovery furnace (and, to a lesser extent, from the melting furnace and alloy reactor), alkyl lead vapor from process vents, and fugitive emissions from the sludge pit. Lead emission factors for the manufacture of lead alkyl appear in Table 6.12-1. Factors are expressed in units of kilograms per megagram (kg/Mg) and pounds per ton (lb/ton).

Emissions from the lead recovery furnace are controlled by fabric filters or wet scrubbers. Vapor streams rich in lead alkyl can either be incinerated and passed through a fabric filter or be scrubbed with water prior to incinerating. Control efficiencies are presented in Table 6.12-2.

Emissions from electrolytic process vents are controlled by using an elevated flare and a liquid incinerator, while a scrubber with toluene as the scrubbing medium controls emissions from the blending and tank car loading/unloading systems.

Table 6.12-1 (Metric And English Units). LEAD ALKYL MANUFACTURE LEAD EMISSION FACTORS[a]

EMISSION FACTOR RATING: B

Process	Lead	
	kg/Mg	lb/ton
Electrolytic[b]	0.5	1.0
Sodium/lead alloy		
Recovery furnace[c]	28	55
Process vents, TEL[d]	2	4
Process vents, TML[d]	75	150
Sludge pits[d]	0.6	1.2

[a] No information on other emissions from lead alkyl manufacturing is available. Emission factors are expressed as weight per unit weight of product.
[b] References 1-3.
[c] References 1-2,4.
[d] Reference 1.

Table 6.12-2. LEAD ALKYL MANUFACTURE CONTROL EFFICIENCIES[a]

Process	Control	Percent Reduction
Sodium/lead alloy	Fabric filter	99+
	Low energy wet scrubber	80 - 85
	High energy wet scrubber	95 - 99

[a] Reference 1.

References For Section 6.12

1. *Background Information In Support Of The Development Of Performance Standards For The Lead Additive Industry*, EPA Contract No. 68-02-2085, PEDCo-Environmental Specialists, Inc., Cincinnati, OH, January 1976.

2. *Control Techniques For Lead Air Emissions*, EPA-450/2-77-012, U. S. Environmental Protection Agency, Research Triangle Park, NC, December 1977.

3. W. E. Davis, *Emissions Study Of Industrial Sources Of Lead Air Pollutants, 1970*, EPA Contract No. 68-02-0271, U. E. Davis and Associates, Leawood, KS, April 1973.

4. R. P. Betz, *et al.*, *Economics Of Lead Removal In Selected Industries*, EPA Contract No. 68-02-0611, Batelle Columbus Laboratories, Columbus, OH, August 1973.

6.13 Pharmaceuticals Production

6.13.1 Process Description

Thousands of individual products are categorized as pharmaceuticals. These products usually are produced in modest quantities in relatively small plants using batch processes. A typical pharmaceutical plant will use the same equipment to make several different products at different times. Rarely is equipment dedicated to the manufacture of a single product.

Organic chemicals are used as raw materials and as solvents, and some chemicals such as ethanol, acetone, isopropanol, and acetic anhydride are used in both ways. Solvents are almost always recovered and used many times.

In a typical batch process, solid reactants and solvent are charged to a reactor where they are held (and usually heated) until the desired product is formed. The solvent is distilled off, and the crude residue may be treated several times with additional solvents to purify it. The purified material is separated from the remaining solvent by centrifuge and finally is dried to remove the last traces of solvent. As a rule, solvent recovery is practiced for each step in the process where it is convenient and cost effective to do so. Some operations involve very small solvent losses, and the vapors are vented to the atmosphere through a fume hood. Generally, all operations are carried out inside buildings, so some vapors may be exhausted through the building ventilation system.

Certain pharmaceuticals — especially antibiotics — are produced by fermentation processes. In these instances, the reactor contains an aqueous nutrient mixture with living organisms such as fungi or bacteria. The crude antibiotic is recovered by solvent extraction and is purified by essentially the same methods described above for chemically synthesized pharmaceutical. Similarly, other pharmaceuticals are produced by extraction from natural plant or animal sources. The production of insulin from hog or beef pancreas is an example. The processes are not greatly different from those used to isolate antibiotics from fermentation broths.

6.13.2 Emissions And Controls

Emissions consist almost entirely of organic solvents that escape from dryers, reactors, distillation systems, storage tanks, and other operations. These emissions are exclusively nonmethane organic compounds. Emissions of other pollutants are negligible (except for particulates in unusual circumstances) and are not treated here. It is not practical to attempt to evaluate emissions from individual steps in the production process or to associate emissions with individual pieces of equipment because of the great variety of batch operations that may be carried out at a single production plant. It is more reasonable to obtain data on total solvent purchases by a plant and to assume that these represent replacements for solvents lost by evaporation. Estimates can be refined by subtracting the materials that do not enter the air because of being incinerated or incorporated into the pharmaceutical product by chemical reaction.

If plant-specific information is not available, industrywide data may be used instead. Table 6.13-1 lists annual purchases of solvents by U. S. pharmaceutical manufacturers and shows the ultimate disposition of each solvent. Disposal methods vary so widely with the type of solvent that it is not possible to recommend average factors for air emissions from generalized solvents. Specific information for individual solvents must be used. Emissions can be estimated by obtaining

Table 6.13-1. SOLVENT PURCHASES AND ULTIMATE DISPOSITION BY PHARMACEUTICAL MANUFACTURERS[a]

Solvent	Annual Purchase (megagrams)	Ultimate Disposition (%)					Liquid Density lb/gal @ 68°F
		Air Emissions	Sewer	Incineration	Solid Waste or Contract Haul	Product	
Acetic Acid	930	1	82	—	—	17	8.7
Acetic Anhydride	1,265	1	57	—	—	42	9.0
Acetone	12,040	14	22	38	7	19	6.6
Acetonitrile	35	83	17	—	—	—	6.6
Amyl Acetate	285	42	58	—	—	—	7.3
Amyl Alcohol	1,430	99	—	—	—	1	6.8
Benzene	1,010	29	37	16	8	10	7.3
Blendan (AMOCO)	530	—	—	—	—	100	NA
Butanol	320	24	8	1	36	31	6.8
Carbon Tetrachloride	1,850	11	7	82	—	—	13.3
Chloroform	500	57	5	—	38	—	12.5
Cyclohexylamine	3,930	—	—	—	—	100	7.2
o-Dichlorobenzene	60	2	98	—	—	—	10.9
Diethylamine	50	94	6	—	—	—	5.9
Diethyl Carbonate	30	4	71	—	—	25	8.1
Dimethyl Acetamide	95	7	—	—	93	—	7.9
Dimethyl Formamide	1,630	71	3	20	6	—	7.9

Table 6.13-1 (cont.).

Solvent	Annual Purchase (megagrams)	Ultimate Disposition (%)					Liquid Density lb/gal @ 68°F
		Air Emissions	Sewer	Incineration	Solid Waste or Contract Haul	Product	
Dimethylsulfoxide	750	1	28	71	—	—	11.1
1,4-Dioxane	43	5	—	—	95	—	8.6
Ethanol	13,230	10	6	7	1	76	6.6
Ethyl Acetate	2,380	30	47	20	3	—	7.5
Ethyl Bromide	45	—	100	—	—	—	12.1
Ethylene Glycol	60	—	100	—	—	—	9.3
Ethyl Ether	280	85	4	—	11	—	6.0
Formaldehyde	30	19	77	—	—	4	—[b]
Formamide	440	—	67	—	26	7	9.5
Freons	7,150	0.1	—	—	—	99.9	—[c]
Hexane	530	17	—	15	68	—	5.5
Isobutyraldehyde	85	50	50	—	—	—	6.6
Isopropanol	3,850	14	17	17	7	45	6.6
Isopropyl Acetate	480	28	11	61	—	—	7.3
Isopropyl Ether	25	50	50	—	—	—	6.0
Methanol	7,960	31	45	14	6	4	6.6
Methyl Cellosolve	195	47	53	—	—	—	8.7

Table 6.13-1 (cont.).

Solvent	Annual Purchase (megagrams)	Ultimate Disposition (%)					Liquid Density lb/gal @ 68°F
		Air Emissions	Sewer	Incineration	Solid Waste or Contract Haul	Product	
Methylene Chloride	10,000	53	5	20	22	—	11.1
Methyl Ethyl Ketone	260	65	12	23	—	—	6.7
Methyl Formate	415	—	74	—	12	14	8.2
Methyl Isobutyl Ketone	260	80	—	—	—	20	6.7
Polyethylene Glycol 600	3	—	—	—	—	100	9.5
Pyridine	3	—	100	—	—	—	8.2
Skelly Solvent B (hexanes)	1,410	29	2	69	—	—	5.6
Tetrahydrofuran	4	—	—	100	—	—	7.4
Toluene	6,010	31	14	26	29	—	7.2
Trichloroethane	135	100	—	—	—	—	11.3
Xylene	3,090	6	19	70	5	—	7.2

[a] These data were reported by 26 member companies of the Pharmaceutical Manufacturers Association, accounting for 53% of pharmaceutical sales in 1975.
[b] Sold as aqueous solutions containing 37% to 50% formaldehyde by weight.
[c] Some Freons are gases, and others are liquids weighing 12-14 lb/gal.

plant-specific data on purchases of individual solvents and computing the quantity of each solvent that evaporates into the air, either from information in Table 6.13-1 or from information obtained for the specific plant under consideration. If solvent volumes are given, rather than weights, liquid densities in Table 6.13-1 can be used to compute weights.

Table 6.13-1 gives for each plant the percentage of each solvent that is evaporated into the air and the percentage that is flushed into the sewer. Ultimately, much of the volatile material from the sewer will evaporate and will reach the air somewhere other than the pharmaceutical plant. Thus, for certain applications it may be appropriate to include both the air emissions and the sewer disposal in an emissions inventory that covers a broad geographic area.

Since solvents are expensive and must be recovered and reused for economic reasons, solvent emissions are controlled as part of the normal operating procedures in a pharmaceutical industry. In addition, most manufacturing is carried out inside buildings, where solvent losses must be minimized to protect the health of the workers. Water- or brine-cooled condensers are the most common control devices, with carbon adsorbers in occasional use. With each of these methods, solvent can be recovered. Where the main objective is not solvent reuse but is the control of an odorous or toxic vapor, scrubbers or incinerators are used. These control systems are usually designed to remove a specific chemical vapor and will be used only when a batch of the corresponding drug is being produced. Usually, solvents are not recovered from scrubbers and reused and, of course, no solvent recovery is possible from an incinerator.

It is difficult to make a quantitative estimate of the efficiency of each control method because it depends on the process being controlled, and pharmaceutical manufacture involves hundreds of different processes. Incinerators, carbon adsorbers, and scrubbers have been reported to remove greater than 90 percent of the organics in the control equipment inlet stream. Condensers are limited in that they can only reduce the concentration in the gas stream to saturation at the condenser temperature, but not below that level. Lowering the temperature will, of course, lower the concentration at saturation, but it is not possible to operate at a temperature below the freezing point of one of the components of the gas stream.

Reference For Section 6.13

1. *Control Of Volatile Organic Emissions From Manufacture Of Synthesized Pharmaceutical Products*, EPA-450/2-78-029, U. S. Environmental Protection Agency, Research Triangle Park, NC, December 1978.

6.14 Maleic Anhydride

6.14.1 General[1]

The dominant end use of maleic anhydride (MA) is in the production of unsaturated polyester resins. These laminating resins, which have high structural strength and good dielectric properties, have a variety of applications in automobile bodies, building panels, molded boats, chemical storage tanks, lightweight pipe, machinery housings, furniture, radar domes, luggage, and bathtubs. Other end products are fumaric acid, agricultural chemicals, alkyd resins, lubricants, copolymers, plastics, succinic acid, surface active agents, and more. In the United States, one plant uses only n-butane and another uses n-butane for 20 percent of its feedstock, but the primary raw material used in the production of MA is benzene. The MA industry is converting old benzene plants and building new plants to use n-butane. MA also is a byproduct of the production of phthalic anhydride. It is a solid at room temperature but is a liquid or gas during production. It is a strong irritant to skin, eyes, and mucous membranes of the upper respiratory system.

The model MA plant, as described in this section, has a benzene-to-MA conversion rate of 94.5 percent, has a capacity of 22,700 megagrams (Mg) (25,000 tons) of MA produced per year, and runs 8000 hours per year.

Because of a lack of data on the n-butane process, this discussion covers only the benzene oxidation process.

6.14.2 Process Description[2]

Maleic anhydride is produced by the controlled air oxidation of benzene, illustrated by the following chemical reaction:

$$2\,C_6H_6 + 9\,O_2 \xrightarrow[MoO_3]{V_2O_5} 2\,C_4H_2O_3 + H_2O + 4\,CO_2$$

Benzene	Oxygen	Catalyst ——>	Maleic anhydride	Water	Carbon dioxide

Vaporized benzene and air are mixed and heated before entering the tubular reactor. Inside the reactor, the benzene/air mixture is reacted in the presence of a catalyst that contains approximately 70 percent vanadium pentoxide (V_2O_5), with usually 25 to 30 percent molybdenum trioxide (MoO_3), forming a vapor of MA, water, and carbon dioxide. The vapor, which may also contain oxygen, nitrogen, carbon monoxide, benzene, maleic acid, formaldehyde, formic acid, and other compounds from side reactions, leaves the reactor and is cooled and partially condensed so that about 40 percent of the MA is recovered in a crude liquid state. The effluent is then passed through a separator that directs the liquid to storage and the remaining vapor to the product recovery absorber. The absorber contacts the vapor with water, producing a liquid of about 40 percent maleic acid. The 40 percent mixture is converted to MA, usually by azeotropic distillation with xylene. Some processes may use a double-effect vacuum evaporator at this point. The effluent then flows to the xylene stripping column where the xylene is extracted. This MA is then combined in storage with that from the separator. The molten product is aged to allow color-forming impurities to polymerize.

These are then removed in a fractionation column, leaving the finished product. Figure 6.14-1 represents a typical process.

MA product is usually stored in liquid form, although it is sometimes flaked and pelletized into briquets and bagged.

6.14.3 Emissions And Controls[2]

Nearly all emissions from MA production are from the main process vent of the product recovery absorber, the largest vent in the process. The predominant pollutant is unreacted benzene, ranging from 3 to 10 percent of the total benzene feed. The composition of uncontrolled emissions from the product recovery absorber is presented in Table 6.14-1. The refining vacuum system vent, the only other exit for process emissions, produces 0.28 kilograms (kg) (0.62 pounds [lb]) per hour of MA and xylene.

Table 6.14-1 (Metric And English Units). COMPOSITION OF UNCONTROLLED EMISSIONS FROM PRODUCT RECOVERY ABSORBER[a]

Component	Wt.%	kg/Mg	lb/ton
Nitrogen	73.37	21,406.0	42,812.0
Oxygen	16.67	4,863.0	9,726.0
Water	4.00	1,167.0	2,334.0
Carbon dioxide	3.33	972.0	1,944.0
Carbon monoxide	2.33	680.0	1,360.0
Benzene	0.33	67.0	134.0
Formaldehyde	0.05	14.4	28.8
Maleic acid	0.01	2.8	5.6
Formic acid	0.01	2.8	5.6
Total		29,175.0	58,350.0

[a] Reference 2.

Fugitive emissions of benzene, xylene, MA, and maleic acid also arise from the storage (see Chapter 7) and handling (see Section 5.1.3) of benzene, xylene, and MA. Dust from the briquetting operations can contain MA, but no data are available on the quantity of such emissions.

Potential sources of secondary emissions are spent reactor catalyst, excess water from the dehydration column, vacuum system water, and fractionation column residues. The small amount of residual organics in the spent catalyst after washing has low vapor pressure and produces a small percentage of total emissions. Xylene is the principal organic contaminant in the excess water from the dehydration column and in the vacuum system water. The residues from the fractionation column are relatively heavy organics, with a molecular weight greater than 116, and they produce a small percentage of total emissions.

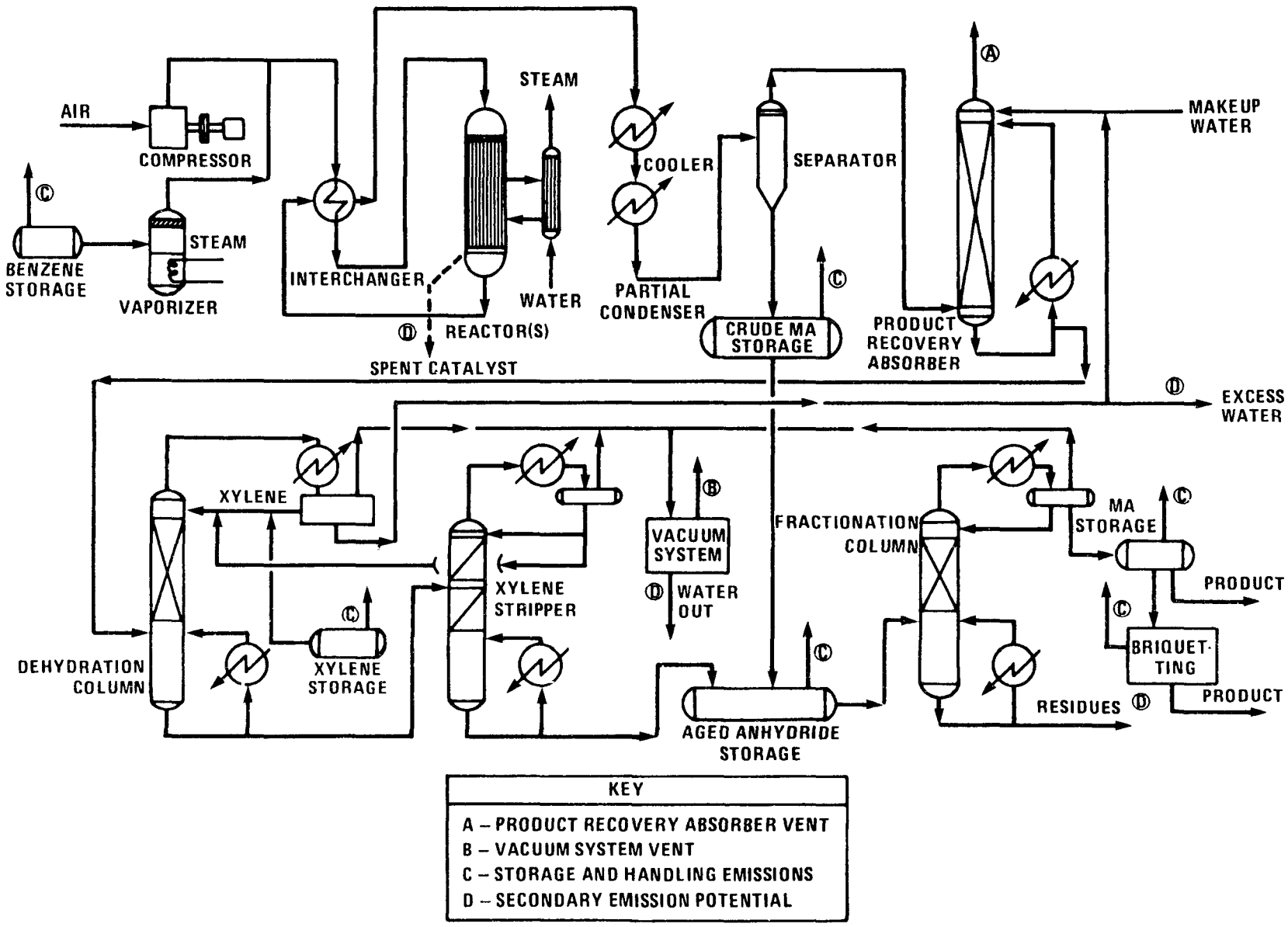

Figure 6.14-1. Process flow diagram for uncontrolled model plant.

Benzene oxidation process emissions can be controlled at the main vent by means of carbon adsorption, thermal incineration, or catalytic incineration. Benzene emissions can be eliminated by conversion to the n-butane process. Catalytic incineration and conversion from the benzene process to the n-butane process are not discussed for lack of data. The vent from the refining vacuum system is combined with that of the main process as a control for refining vacuum system emissions. A carbon adsorption system or an incineration system can be designed and operated at a 99.5 percent removal efficiency for benzene and volatile organic compounds with the operating parameters given in Appendix R of Reference 2.

Fugitive emissions from pumps and valves may be controlled by an appropriate leak detection system and maintenance program. No control devices are presently being used for secondary emissions. Table 6.14-2 presents emission factors for MA production.

Table 6.14-2 (Metric And English Units). EMISSION FACTORS FOR MALEIC ANHYDRIDE PRODUCTION[a]

EMISSION FACTOR RATING: C

Source	Nonmethane VOC[b]		Benzene	
	kg/Mg	lb/ton	kg/Mg	lb/ton
Product vents (recovery absorber and refining vacuum system combined vent)				
Uncontrolled	87	174	67.0	134.0
With carbon adsorption[c]	0.34	0.68	0.34	0.68
With incineration	0.43	0.86	0.34	0.68
Storage and handling emissions[d]	—[d]	—[d]	—[d]	—[d]
Fugitive emissions[e]	—[e]	—[e]	—[e]	—[e]
Secondary emissions[f]	ND	ND	ND	ND

[a] No data are available for catalytic incineration or for plants producing MA from n-butane. ND = no data.

[b] VOC also includes the benzene. For recovery absorber and refining vacuum, VOC can be MA and xylene; for storage and handling, MA, xylene and dust from briquetting operations; for secondary emissions, residual organics from spent catalyst, excess water from dehydration column, vacuum system water, and fractionation column residues. VOC contains no methane.

[c] Before exhaust gas stream goes into carbon adsorber, it is scrubbed with caustic to remove organic acids and water soluble organics. Benzene is the only likely VOC remaining.

[d] See Chapter 7.

[e] See Section 5.1.3.

[f] Secondary emission sources are excess water from dehydration column, vacuum system water, and organics from fractionation column. No data are available on the quantity of these emissions.

References For Section 6.14

1. B. Dmuchovsky and J. E. Franz, "Maleic Anhydride", *Kirk-Othmer Encyclopedia of Chemical Technology, Volume 12*, John Wiley and Sons, Inc., New York, NY, 1967, pp. 819-837.

2. J. F. Lawson, *Emission Control Options For The Synthetic Organic Chemicals Manufacturing Industry: Maleic Anhydride Product Report*, EPA Contract No. 68-02-2577, Hydroscience, Inc., Knoxville, TN, March 1978.

6.15 Methanol

[Work In Progress]

6.16 Acetone And Phenol

[Work In Progress]

6.17 Propylene

[Work In Progress]

6.18 Benzene, Toluene, And Xylenes

[Work In Progress]

6.19 Butadiene

[Work In Progress]

6.20 Cumene

[Work In Progress]

6.21 Ethanol

[Work In Progress]

6.22 Ethyl Benzene

[Work In Progress]

6.23 Ethylene

[Work In Progress]

6.24 Ethylene Dichloride And Vinyl Chloride

[Work In Progress]

6.25 Ethylene Glycol

[Work In Progress]

6.26 Ethylene Oxide

[Work In Progress]

6.27 Formaldehyde

[Work In Progress]

6.28 Glycerine

[Work In Progress]

6.29 Isopropyl Alcohol

[Work In Progress]

7. LIQUID STORAGE TANKS

This chapter presents models for estimating air emissions from organic liquid storage tanks. It also contains detailed descriptions of typical varieties of such tanks, including horizontal, vertical, and underground fixed roof tanks, and internal, external, and domed external floating roof tanks.

The emission estimation equations presented herein have been developed by the American Petroleum Institute (API), which retains the legal rights to these equations. API has granted EPA permission for the nonexclusive, noncommercial distribution of this material to governmental and regulatory agencies. However, API reserves its rights regarding all commercial duplication and distribution of its material. Hence, the material presented is available for public use, but it cannot be sold without written permission from both the American Petroleum Institute and the U. S. Environmental Protection Agency.

The major pollutant of concern is volatile organic compounds. There also may be speciated organic compounds that may be toxic or hazardous.

7.1 Organic Liquid Storage Tanks

7.1.1 Process Description[1-2]

Storage vessels containing organic liquids can be found in many industries, including (1) petroleum producing and refining, (2) petrochemical and chemical manufacturing, (3) bulk storage and transfer operations, and (4) other industries consuming or producing organic liquids. Organic liquids in the petroleum industry, usually called petroleum liquids, generally are mixtures of hydrocarbons having dissimilar true vapor pressures (for example, gasoline and crude oil). Organic liquids in the chemical industry, usually called volatile organic liquids, are composed of pure chemicals or mixtures of chemicals with similar true vapor pressures (for example, benzene or a mixture of isopropyl and butyl alcohols).

Six basic tank designs are used for organic liquid storage vessels: fixed roof (vertical and horizontal), external floating roof, domed external (or covered) floating roof, internal floating roof, variable vapor space, and pressure (low and high). A brief description of each tank is provided below. Loss mechanisms associated with each type of tank are provided in Section 7.1.2.

The emission estimating equations presented in Section 7.1 were developed by the American Petroleum Institute (API). API retains the copyright to these equations. API has granted permission for the nonexclusive; noncommercial distribution of this material to governmental and regulatory agencies. However, API reserves its rights regarding all commercial duplication and distribution of its material. Therefore, the material presented in Section 7.1 is available for public use, but the material cannot be sold without written permission from the American Petroleum Institute and the U. S. Environmental Protection Agency.

7.1.1.1 Fixed Roof Tanks –

A typical vertical fixed roof tank is shown in Figure 7.1-1. This type of tank consists of a cylindrical steel shell with a permanently affixed roof, which may vary in design from cone- or dome-shaped to flat. Losses from fixed roof tanks are caused by changes in temperature, pressure, and liquid level.

Fixed roof tanks are either freely vented or equipped with a pressure/vacuum vent. The latter allows the tanks to operate at a slight internal pressure or vacuum to prevent the release of vapors during very small changes in temperature, pressure, or liquid level. Of current tank designs, the fixed roof tank is the least expensive to construct and is generally considered the minimum acceptable equipment for storing organic liquids.

Horizontal fixed roof tanks are constructed for both above-ground and underground service and are usually constructed of steel, steel with a fiberglass overlay, or fiberglass-reinforced polyester. Horizontal tanks are generally small storage tanks with capacities of less than 40,000 gallons. Horizontal tanks are constructed such that the length of the tank is not greater than six times the diameter to ensure structural integrity. Horizontal tanks are usually equipped with pressure-vacuum vents, gauge hatches and sample wells, and manholes to provide access to these tanks. In addition, underground tanks may be cathodically protected to prevent corrosion of the tank shell. Cathodic protection is accomplished by placing sacrificial anodes in the tank that are connected to an impressed current system or by using galvanic anodes in the tank. However, internal cathodic protection against

corrosion is no longer widely used in the petroleum industry, due to corrosion inhibitors that are now found in most refined petroleum products.

The potential emission sources for above-ground horizontal tanks are the same as those for vertical fixed roof tanks. Emissions from underground storage tanks are associated mainly with changes in the liquid level in the tank. Losses due to changes in temperature or barometric pressure are minimal for underground tanks because the surrounding earth limits the diurnal temperature change, and changes in the barometric pressure result in only small losses.

7.1.1.2 External Floating Roof Tanks –

A typical external floating roof tank (EFRT) consists of an open- topped cylindrical steel shell equipped with a roof that floats on the surface of the stored liquid. The floating roof consists of a deck, fittings, and rim seal system. Floating decks that are currently in use are constructed of welded steel plate and are of two general types: pontoon or double-deck. Pontoon-type and double-deck-type external floating roof tanks are shown in Figures 7.1-2 and 7.1-3, respectively. With all types of external floating roof tanks, the roof rises and falls with the liquid level in the tank. External floating decks are equipped with a rim seal system, which is attached to the deck perimeter and contacts the tank wall. The purpose of the floating roof and rim seal system is to reduce evaporative loss of the stored liquid. Some annular space remains between the seal system and the tank wall. The seal system slides against the tank wall as the roof is raised and lowered. The floating deck is also equipped with fittings that penetrate the deck and serve operational functions. The external floating roof design is such that evaporative losses from the stored liquid are limited to losses from the rim seal system and deck fittings (standing storage loss) and any exposed liquid on the tank walls (withdrawal loss).

7.1.1.3 Internal Floating Roof Tanks –

An internal floating roof tank (IFRT) has both a permanent fixed roof and a floating roof inside. There are two basic types of internal floating roof tanks: tanks in which the fixed roof is supported by vertical columns within the tank, and tanks with a self-supporting fixed roof and no internal support columns. Fixed roof tanks that have been retrofitted to use a floating roof are typically of the first type. External floating roof tanks that have been converted to internal floating roof tanks typically have a self-supporting roof. Newly constructed internal floating roof tanks may be of either type. The deck in internal floating roof tanks rises and falls with the liquid level and either floats directly on the liquid surface (contact deck) or rests on pontoons several inches above the liquid surface (noncontact deck). The majority of aluminum internal floating roofs currently in service have noncontact decks. A typical internal floating roof tank is shown in Figure 7.1-4.

Contact decks can be (1) aluminum sandwich panels that are bolted together, with a honeycomb aluminum core floating in contact with the liquid; (2) pan steel decks floating in contact with the liquid, with or without pontoons; and (3) resin-coated, fiberglass reinforced polyester (FRP), buoyant panels floating in contact with the liquid. The majority of internal contact floating decks currently in service are aluminum sandwich panel-type or pan steel-type. The FRP decks are less common. The panels of pan steel decks are usually welded together.

Noncontact decks are the most common type currently in use. Typical noncontact decks are constructed of an aluminum deck and an aluminum grid framework supported above the liquid surface by tubular aluminum pontoons or some other buoyant structure. The noncontact decks usually have bolted deck seams. Installing a floating roof minimizes evaporative losses of the stored liquid. Both contact and noncontact decks incorporate rim seals and deck fittings for the same purposes previously described for external floating roof tanks. Evaporative losses from floating roofs may come from deck

fittings, nonwelded deck seams, and the annular space between the deck and tank wall. In addition, these tanks are freely vented by circulation vents at the top of the fixed roof. The vents minimize the possibility of organic vapor accumulation in the tank vapor space in concentrations approaching the flammable range. An internal floating roof tank not freely vented is considered a pressure tank. Emission estimation methods for such tanks are not provided in AP-42.

7.1.1.4 Domed External Floating Roof Tanks –

Domed external (or covered) floating roof tanks have the heavier type of deck used in external floating roof tanks as well as a fixed roof at the top of the shell like internal floating roof tanks. Domed external floating roof tanks usually result from retrofitting an external floating roof tank with a fixed roof. This type of tank is very similar to an internal floating roof tank with a welded deck and a self supporting fixed roof. A typical domed external floating roof tank is shown in Figure 7.1-5.

As with the internal floating roof tanks, the function of the fixed roof is not to act as a vapor barrier, but to block the wind. The type of fixed roof most commonly used is a self supporting aluminum dome roof, which is of bolted construction. Like the internal floating roof tanks, these tanks are freely vented by circulation vents at the top of the fixed roof. The deck fittings and rim seals, however, are identical to those on external floating roof tanks. In the event that the floating deck is replaced with the lighter IFRT-type deck, the tank would then be considered an internal floating roof tank.

7.1.1.5 Variable Vapor Space Tanks –

Variable vapor space tanks are equipped with expandable vapor reservoirs to accommodate vapor volume fluctuations attributable to temperature and barometric pressure changes. Although variable vapor space tanks are sometimes used independently, they are normally connected to the vapor spaces of one or more fixed roof tanks. The two most common types of variable vapor space tanks are lifter roof tanks and flexible diaphragm tanks.

Lifter roof tanks have a telescoping roof that fits loosely around the outside of the main tank wall. The space between the roof and the wall is closed by either a wet seal, which is a trough filled with liquid, or a dry seal, which uses a flexible coated fabric.

Flexible diaphragm tanks use flexible membranes to provide expandable volume. They may be either separate gasholder units or integral units mounted atop fixed roof tanks.

Variable vapor space tank losses occur during tank filling when vapor is displaced by liquid. Loss of vapor occurs only when the tank's vapor storage capacity is exceeded.

7.1.1.6 Pressure Tanks –

Two classes of pressure tanks are in general use: low pressure (2.5 to 15 psig) and high pressure (higher than 15 psig). Pressure tanks generally are used for storing organic liquids and gases with high vapor pressures and are found in many sizes and shapes, depending on the operating pressure of the tank. Pressure tanks are equipped with a pressure/vacuum vent that is set to prevent venting loss from boiling and breathing loss from daily temperature or barometric pressure changes. High-pressure storage tanks can be operated so that virtually no evaporative or working losses occur. In low-pressure tanks, working losses can occur with atmospheric venting of the tank during filling operations. No appropriate correlations are available to estimate vapor losses from pressure tanks.

7.1.2 Emission Mechanisms And Control

Emissions from organic liquids in storage occur because of evaporative loss of the liquid during its storage and as a result of changes in the liquid level. The emission sources vary with tank design, as does the relative contribution of each type of emission source. Emissions from fixed roof tanks are a result of evaporative losses during storage (known as breathing losses or standing storage losses) and evaporative losses during filling and emptying operations (known as working losses). External and internal floating roof tanks are emission sources because of evaporative losses that occur during standing storage and withdrawal of liquid from the tank. Standing storage losses are a result of evaporative losses through rim seals, deck fittings, and/or deck seams. The loss mechanisms for fixed roof and external and internal floating roof tanks are described in more detail in this section. Variable vapor space tanks are also emission sources because of evaporative losses that result during filling operations. The loss mechanism for variable vapor space tanks is also described in this section. Emissions occur from pressure tanks, as well. However, loss mechanisms from these sources are not described in this section.

7.1.2.1 Fixed Roof Tanks –

The two significant types of emissions from fixed roof tanks are storage and working losses. Storage loss is the expulsion of vapor from a tank through vapor expansion and contraction, which are the results of changes in temperature and barometric pressure. This loss occurs without any liquid level change in the tank.

The combined loss from filling and emptying is called working loss. Evaporation during filling operations is a result of an increase in the liquid level in the tank. As the liquid level increases, the pressure inside the tank exceeds the relief pressure and vapors are expelled from the tank. Evaporative loss during emptying occurs when air drawn into the tank during liquid removal becomes saturated with organic vapor and expands, thus exceeding the capacity of the vapor space.

Fixed roof tank emissions vary as a function of vessel capacity, vapor pressure of the stored liquid, utilization rate of the tank, and atmospheric conditions at the tank location.

Several methods are used to control emissions from fixed roof tanks. Emissions from fixed roof tanks can be controlled by installing an internal floating roof and seals to minimize evaporation of the product being stored. The control efficiency of this method ranges from 60 to 99 percent, depending on the type of roof and seals installed and on the type of organic liquid stored.

Vapor balancing is another means of emission control. Vapor balancing is probably most common in the filling of tanks at gasoline stations. As the storage tank is filled, the vapors expelled from the storage tank are directed to the emptying gasoline tanker truck. The truck then transports the vapors to a centralized station where a vapor recovery or control system is used to control emissions. Vapor balancing can have control efficiencies as high as 90 to 98 percent if the vapors are subjected to vapor recovery or control. If the truck vents the vapor to the atmosphere instead of to a recovery or control system, no control is achieved.

Vapor recovery systems collect emissions from storage vessels and convert them to liquid product. Several vapor recovery procedures may be used, including vapor/liquid absorption, vapor compression, vapor cooling, vapor/solid adsorption, or a combination of these. The overall control efficiencies of vapor recovery systems are as high as 90 to 98 percent, depending on the methods used, the design of the unit, the composition of vapors recovered, and the mechanical condition of the system.

In a typical thermal oxidation system, the air/vapor mixture is injected through a burner manifold into the combustion area of an incinerator. Control efficiencies for this system can range from 96 to 99 percent.

7.1.2.2 Floating Roof Tanks[2-7] –

Total emissions from floating roof tanks are the sum of withdrawal losses and standing storage losses. Withdrawal losses occur as the liquid level, and thus the floating roof, is lowered. Some liquid remains on the inner tank wall surface and evaporates. For an internal floating roof tank that has a column supported fixed roof, some liquid also clings to the columns and evaporates. Evaporative loss occurs until the tank is filled and the exposed surfaces are again covered. Standing storage losses from floating roof tanks include rim seal and deck fitting losses, and for internal floating roof tanks also include deck seam losses for constructions other than welded decks. Other potential standing storage loss mechanisms include breathing losses as a result of temperature and pressure changes.

Rim seal losses can occur through many complex mechanisms, but for external floating roof tanks, the majority of rim seal vapor losses have been found to be wind induced. No dominant wind loss mechanism has been identified for internal floating roof or domed external floating roof tank rim seal losses. Losses can also occur due to permeation of the rim seal material by the vapor or via a wicking effect of the liquid, but permeation of the rim seal material generally does not occur if the correct seal fabric is used. Testing has indicated that breathing, solubility, and wicking loss mechanisms are small in comparison to the wind-induced loss. The rim seal factors presented in this section incorporate all types of losses.

The rim seal system is used to allow the floating roof to rise and fall within the tank as the liquid level changes. The rim seal system also helps to fill the annular space between the rim and the tank shell and therefore minimize evaporative losses from this area. A rim seal system may consist of just a primary seal or a primary and a secondary seal, which is mounted above the primary seal. Examples of primary and secondary seal configurations are shown in Figures 7.1-6, 7.1-7, and 7.1-8.

The primary seal serves as a vapor conservation device by closing the annular space between the edge of the floating deck and the tank wall. Three basic types of primary seals are used on external floating roofs: mechanical (metallic) shoe, resilient filled (nonmetallic), and flexible wiper seals. Some primary seals on external floating roof tanks are protected by a weather shield. Weather shields may be of metallic, elastomeric, or composite construction and provide the primary seal with longer life by protecting the primary seal fabric from deterioration due to exposure to weather, debris, and sunlight. Internal floating roofs typically incorporate one of two types of flexible, product-resistant seals: resilient foam-filled seals or wiper seals. Mechanical shoe seals, resilient filled seals, and wiper seals are discussed below.

A mechanical shoe seal uses a light-gauge metallic band as the sliding contact with the shell of the tank, as shown in Figure 7.1-7. The band is formed as a series of sheets (shoes) which are joined together to form a ring, and are held against the tank shell by a mechanical device. The shoes are normally 3 to 5 feet deep, providing a potentially large contact area with the tank shell. Expansion and contraction of the ring can be provided for as the ring passes over shell irregularities or rivets by jointing narrow pieces of fabric into the ring or by crimping the shoes at intervals. The bottoms of the shoes extend below the liquid surface to confine the rim vapor space between the shoe and the floating deck.

The rim vapor space, which is bounded by the shoe, the rim of the floating deck, and the liquid surface, is sealed from the atmosphere by bolting or clamping a coated fabric, called the primary seal fabric, that extends from the shoe to the rim to form an "envelope". Two locations are used for attaching the primary seal fabric. The fabric is most commonly attached to the top of the shoe and the rim of the floating deck. To reduce the rim vapor space, the fabric can be attached to the shoe and the floating deck rim near the liquid surface. Rim vents can be used to relieve any excess pressure or vacuum in the vapor space.

A resilient filled seal can be mounted to eliminate the vapor space between the rim seal and liquid surface (liquid mounted) or to allow a vapor space between the rim seal and the liquid surface (vapor mounted). Both configurations are shown in Figures 7.1-6 and 7.1-7. Resilient filled seals work because of the expansion and contraction of a resilient material to maintain contact with the tank shell while accommodating varying annular rim space widths. These rim seals allow the roof to move up and down freely, without binding.

Resilient filled seals typically consist of a core of open-cell foam encapsulated in a coated fabric. The seals are attached to a mounting on the deck perimeter and extend around the deck circumference. Polyurethane-coated nylon fabric and polyurethane foam are commonly used materials. For emission control, it is important that the attachment of the seal to the deck and the radial seal joints be vapor-tight and that the seal be in substantial contact with the tank shell.

Wiper seals generally consist of a continuous annular blade of flexible material fastened to a mounting bracket on the deck perimeter that spans the annular rim space and contacts the tank shell. This type of seal is depicted in Figure 7.1-6. New tanks with wiper seals may have dual wipers, one mounted above the other. The mounting is such that the blade is flexed, and its elasticity provides a sealing pressure against the tank shell.

Wiper seals are vapor mounted; a vapor space exists between the liquid stock and the bottom of the seal. For emission control, it is important that the mounting be vapor-tight, that the seal extend around the circumference of the deck and that the blade be in substantial contact with the tank shell. Two types of materials are commonly used to make the wipers. One type consists of a cellular, elastomeric material tapered in cross section with the thicker portion at the mounting. Rubber is a commonly used material; urethane and cellular plastic are also available. All radial joints in the blade are joined. The second type of material that can be used is a foam core wrapped with a coated fabric. Polyurethane on nylon fabric and polyurethane foam are common materials. The core provides the flexibility and support, while the fabric provides the vapor barrier and wear surface.

A secondary seal may be used to provide some additional evaporative loss control over that achieved by the primary seal. Secondary seals can be either flexible wiper seals or resilient filled seals. For external floating roof tanks, two configurations of secondary seals are available: shoe mounted and rim mounted, as shown in Figure 7.1-8. Rim mounted secondary seals are more effective in reducing losses than shoe mounted secondary seals because they cover the entire rim vapor space. For internal floating roof tanks, the secondary seal is mounted to an extended vertical rim plate, above the primary seal, as shown in Figure 7.1-8. However, for some floating roof tanks, using a secondary seal further limits the tank's operating capacity due to the need to keep the seal from interfering with fixed roof rafters or to keep the secondary seal in contact with the tank shell when the tank is filled.

The deck fitting losses from floating roof tanks can be explained by the same mechanisms as the rim seal losses. However, the relative contribution of each mechanism is not known. The deck fitting losses identified in this section account for the combined effect of all of the mechanisms.

Numerous fittings pass through or are attached to floating roof decks to accommodate structural support components or allow for operational functions. Internal floating roof deck fittings are typically of different configuration than those for external floating roof decks. Rather than having tall housings to avoid rainwater entry, internal floating roof deck fittings tend to have lower profile housings to minimize the potential for the fitting to contact the fixed roof when the tank is filled. Deck fittings can be a source of evaporative loss when they require openings in the deck. The most common components that require openings in the deck are described below.

1. Access hatches. An access hatch is an opening in the deck with a peripheral vertical well that is large enough to provide passage for workers and materials through the deck for construction or servicing. Attached to the opening is a removable cover that may be bolted and/or gasketed to reduce evaporative loss. On internal floating roof tanks with noncontact decks, the well should extend down into the liquid to seal off the vapor space below the noncontact deck. A typical access hatch is shown in Figure 7.1-9.

2. Gauge-floats. A gauge-float is used to indicate the level of liquid within the tank. The float rests on the liquid surface and is housed inside a well that is closed by a cover. The cover may be bolted and/or gasketed to reduce evaporation loss. As with other similar deck penetrations, the well extends down into the liquid on noncontact decks in internal floating roof tanks. A typical gauge-float and well are shown in Figure 7.1-9.

3. Gauge-hatch/sample ports. A gauge-hatch/sample port consists of a pipe sleeve equipped with a self-closing gasketed cover (to reduce evaporative losses) and allows hand-gauging or sampling of the stored liquid. The gauge-hatch/sample port is usually located beneath the gauger's platform, which is mounted on top of the tank shell. A cord may be attached to the self-closing gasketed cover so that the cover can be opened from the platform. A typical gauge-hatch/sample port is shown in Figure 7.1-9.

4. Rim vents. Rim vents are used on tanks equipped with a seal design that creates a vapor pocket in the seal and rim area, such as a mechanical shoe seal. A typical rim vent is shown in Figure 7.1-10. The vent is used to release any excess pressure or vacuum that is present in the vapor space bounded by the primary-seal shoe and the floating roof rim and the primary seal fabric and the liquid level. Rim vents usually consist of weighted pallets that rest on a gasketed cover.

5. Deck drains. Currently two types of deck drains are in use (closed and open deck drains) to remove rainwater from the floating deck. Open deck drains can be either flush or overflow drains. Both types consist of a pipe that extends below the deck to allow the rainwater to drain into the stored liquid. Only open deck drains are subject to evaporative loss. Flush drains are flush with the deck surface. Overflow drains are elevated above the deck surface. Typical overflow and flush deck drains are shown in Figure 7.1-10. Overflow drains are used to limit the maximum amount of rainwater that can accumulate on the floating deck, providing emergency drainage of rainwater if necessary. Closed deck drains carry rainwater from the surface of the deck though a flexible hose or some other type of piping system that runs through the stored liquid prior to exiting the tank. The rainwater does not come in contact with the liquid, so no evaporative losses result. Overflow drains are usually used in conjunction with a closed drain system to carry rainwater outside the tank.

6. Deck legs. Deck legs are used to prevent damage to fittings underneath the deck and to allow for tank cleaning or repair, by holding the deck at a predetermined distance off the tank bottom. These supports consist of adjustable or fixed legs attached to the floating deck or hangers suspended from the fixed roof. For adjustable legs or hangers, the load-carrying element passes through a well or sleeve into the deck. With noncontact decks, the well should extend into the liquid. Evaporative losses may occur in the annulus between the deck leg and its sleeve. A typical deck leg is shown in Figure 7.1-10.

7. Unslotted guidepoles and wells. A guidepole is an antirotational device that is fixed to the top and bottom of the tank, passing through a well in the floating roof. The guidepole is used to prevent adverse movement of the roof and thus damage to deck fittings and the rim seal system. In some cases, an unslotted guidepole is used for gauging purposes, but there is a potential for differences in the pressure, level, and composition of the liquid inside and outside of the guidepole. A typical guidepole and well are shown in Figure 7.1-11.

8. Slotted (perforated) guidepoles and wells. The function of the slotted guidepole is similar to the unslotted guidepole but also has additional features. Perforated guidepoles can be either slotted or drilled hole guidepoles. A typical slotted guidepole and well are shown in Figure 7.1-11. As shown in this figure, the guide pole is slotted to allow stored liquid to enter. The same can be accomplished with drilled holes. The liquid entering the guidepole is well mixed, having the same composition as the remainder of the stored liquid, and is at the same liquid level as the liquid in the tank. Representative samples can therefore be collected from the slotted or drilled hole guidepole. However, evaporative loss from the guidepole can be reduced by modifying the guidepole or well or by placing a float inside the guidepole. Guidepoles are also referred to as gauge poles, gauge pipes, or stilling wells.

9. Vacuum breakers. A vacuum breaker equalizes the pressure of the vapor space across the deck as the deck is either being landed on or floated off its legs. A typical vacuum breaker is shown in Figure 7.1-10. As depicted in this figure, the vacuum breaker consists of a well with a cover. Attached to the underside of the cover is a guided leg long enough to contact the tank bottom as the floating deck approaches. When in contact with the tank bottom, the guided leg mechanically opens the breaker by lifting the cover off the well; otherwise, the cover closes the well. The closure may be gasketed or ungasketed. Because the purpose of the vacuum breaker is to allow the free exchange of air and/or vapor, the well does not extend appreciably below the deck.

Fittings used only on internal floating roof tanks include column wells, ladder wells, and stub drains.

1. Columns and wells. The most common fixed-roof designs are normally supported from inside the tank by means of vertical columns, which necessarily penetrate an internal floating deck. (Some fixed roofs are entirely self-supporting and, therefore, have no support columns.) Column wells are similar to unslotted guide pole wells on external floating roofs. Columns are made of pipe with circular cross sections or of structural shapes with irregular cross sections (built-up). The number of columns varies with tank diameter, from a minimum of 1 to over 50 for very large diameter tanks. A typical fixed roof support column and well are shown in Figure 7.1-9.

The columns pass through deck openings via peripheral vertical wells. With noncontact decks, the well should extend down into the liquid stock. Generally, a closure device exists between the top of the well and the column. Several proprietary designs exist for this closure, including sliding covers and fabric sleeves, which must accommodate the movements of the deck relative to the column as the

liquid level changes. A sliding cover rests on the upper rim of the column well (which is normally fixed to the deck) and bridges the gap or space between the column well and the column. The cover, which has a cutout, or opening, around the column slides vertically relative to the column as the deck raises and lowers. At the same time, the cover slides horizontally relative to the rim of the well. A gasket around the rim of the well reduces emissions from this fitting. A flexible fabric sleeve seal between the rim of the well and the column (with a cutout or opening, to allow vertical motion of the seal relative to the columns) similarly accommodates limited horizontal motion of the deck relative to the column.

2. Ladders and wells. Some tanks are equipped with internal ladders that extend from a manhole in the fixed roof to the tank bottom. The deck opening through which the ladder passes is constructed with similar design details and considerations to deck openings for column wells, as previously discussed. A typical ladder well is shown in Figure 7.1-12.

3. Stub drains. Bolted internal floating roof decks are typically equipped with stub drains to allow any stored product that may be on the deck surface to drain back to the underside of the deck. The drains are attached so that they are flush with the upper deck. Stub drains are approximately 1 inch in diameter and extend down into the product on noncontact decks.

Deck seams in internal floating roof tanks are a source of emissions to the extent that these seams may not be completely vapor tight if the deck is not welded. Generally, the same loss mechanisms for fittings apply to deck seams. The predominant mechanism depends on whether or not the deck is in contact with the stored liquid. The deck seam loss equation accounts for the effects of all contributing loss mechamisms.

7.1.3 Emission Estimation Procedures

The following section presents the emission estimation procedures for fixed roof, external floating roof, domed external floating roof, and internal floating roof tanks. These procedures are valid for all petroleum liquids, pure volatile organic liquids, and chemical mixtures with similar true vapor pressures. It is important to note that in all the emission estimation procedures the physical properties of the vapor do not include the noncondensibles (e. g., air) in the gas but only refer to the condensible components of the stored liquid. To aid in the emission estimation procedures, a list of variables with their corresponding definitions was developed and is presented in Table 7.1-1.

The factors presented in AP-42 are those that are currently available and have been reviewed and approved by the U. S. Environmental Protection Agency. As storage tank equipment vendors design new floating decks and equipment, new emission factors may be developed based on that equipment. If the new emission factors are reviewed and approved, the emission factors will be added to AP-42 during the next update.

The emission estimation procedures outlined in this chapter have been used as the basis for the development of a software program to estimate emissions from storage tanks. The software program entitled "TANKS" is available through the Technology Transfer Network (TTN) Bulletin Board System maintained by the U. S. Environmental Protection Agency.

7.1.3.1 Total Losses From Fixed Roof Tanks[4,8-14] –

The following equations, provided to estimate standing storage and working loss emissions, apply to tanks with vertical cylindrical shells and fixed roofs. These tanks must be substantially liquid- and vapor-tight and must operate approximately at atmospheric pressure. The equations are not

intended to be used in estimating losses from unstable or boiling stocks or from mixtures of hydrocarbons or petrochemicals for which the vapor pressure is not known or cannot be readily predicted. Total losses from fixed roof tanks are equal to the sum of the standing storage loss and working loss:

$$L_T = L_S + L_W \tag{1-1}$$

where:

L_T = total losses, lb/yr

L_S = standing storage losses, lb/yr

L_W = working losses, lb/yr

Standing Storage Loss - Fixed roof tank breathing or standing storage losses can be estimated from:

$$L_S = 365\ V_V W_V K_E K_S \tag{1-2}$$

where:

L_S = standing storage loss, lb/yr

V_V = vapor space volume, ft^3

W_V = vapor density, lb/ft^3

K_E = vapor space expansion factor, dimensionless

K_S = vented vapor saturation factor, dimensionless

365 = constant, d/yr

Tank Vapor Space Volume, V_V - The tank vapor space volume is calculated using the following equation:

$$V_V = \frac{\pi}{4} D^2 H_{VO} \tag{1-3}$$

where:

V_V = vapor space volume, ft^3

D = tank diameter, ft, see Note 1 for horizontal tanks

H_{VO} = vapor space outage, ft

The vapor space outage, H_{VO} is the height of a cylinder of tank diameter, D, whose volume is equivalent to the vapor space volume of a fixed roof tank, including the volume under the cone or dome roof. The vapor space outage, H_{VO}, is estimated from:

$$H_{VO} = H_S - H_L + H_{RO} \quad (1\text{-}4)$$

where:

H_{VO} = vapor space outage, ft

H_S = tank shell height, ft

H_L = liquid height, ft

H_{RO} = roof outage, ft; see Note 2 for a cone roof or Note 3 for a dome roof

Notes:

1. The emission estimating equations presented above were developed for vertical fixed roof tanks. If a user needs to estimate emissions from a horizontal fixed roof tank, some of the tank parameters can be modified before using the vertical tank emission estimating equations. First, by assuming that the tank is one-half filled, the surface area of the liquid in the tank is approximately equal to the length of the tank times the diameter of the tank. Next, assume that this area represents a circle, i. e., that the liquid is an upright cylinder. Therefore, the effective diameter, D_E, is then equal to:

$$D_E = \sqrt{\frac{LD}{0.785}} \quad (1\text{-}5)$$

where:

D_E = effective tank diameter, ft

L = length of tank, ft

D = actual diameter of tank, ft

One-half of the actual diameter of the horizontal tank should be used as the vapor space outage, H_{VO}. This method yields only a very approximate value for emissions from horizontal storage tanks. For underground horizontal tanks, assume that no breathing or standing storage losses occur ($L_S = 0$) because the insulating nature of the earth limits the diurnal temperature change. No modifications to the working loss equation are necessary for either above-ground or underground horizontal tanks.

2. For a cone roof, the roof outage, H_{RO}, is calculated as follows:

$$H_{RO} = 1/3\ H_R \quad (1\text{-}6)$$

where:

H_{RO} = roof outage (or shell height equivalent to the volume contained under the roof), ft

H_R = tank roof height, ft

The tank roof height, H_R, is equal to $S_R R_S$

where:

S_R = tank cone roof slope, if unknown, a standard value of 0.0625 ft/ft is used, ft/ft

R_S = tank shell radius, ft

3. For a dome roof, the roof outage, H_{RO}, is calculated as follows:

$$H_{RO} = H_R \left[1/2 + 1/6 \left[\frac{H_R}{R_S} \right]^2 \right] \tag{1-7}$$

where:

H_{RO} = roof outage, ft

H_R = tank roof height, ft

R_S = tank shell radius, ft

The tank roof height, H_R, is calculated:

$$H_R = R_R - (R_R^2 - R_S^2)^{0.5} \tag{1-8}$$

where:

H_R = tank roof height, ft

R_R = tank dome roof radius, ft

R_S = tank shell radius, ft

The value of R_R usually ranges from 0.8D - 1.2D, where D = 2 R_S. If R_R is unknown, the tank diameter is used in its place. If the tank diameter is used as the value for R_R, Equations 1-7 and 1-8 reduce to H_R = 0.268 R_S and H_{RO} = 0.137 R_S.

Vapor Density, W_V - The density of the vapor is calculated using the following equation:

$$W_V = \frac{M_V P_{VA}}{RT_{LA}} \tag{1-9}$$

where:

W_V = vapor density, lb/ft^3

M_V = vapor molecular weight, lb/lb-mole; see Note 1

R = the ideal gas constant, 10.731 psia·ft^3/lb-mole·°R

P_{VA} = vapor pressure at daily average liquid surface temperature, psia; see Notes 1 and 2

T_{LA} = daily average liquid surface temperature, °R; see Note 3

Notes:

1. The molecular weight of the vapor, M_V, can be determined from Table 7.1-2 and 7.1-3 for selected petroleum liquids and volatile organic liquids, respectively, or by analyzing vapor samples. Where mixtures of organic liquids are stored in a tank, M_V can be calculated from the liquid composition. The molecular weight of the vapor, M_V, is equal to the sum of the molecular weight, M_i, multiplied by the vapor mole fraction, y_i, for each component. The vapor mole fraction is equal to the partial pressure of component i divided by the total vapor pressure. The partial pressure of component i is equal to the true vapor pressure of component i (P) multiplied by the liquid mole fraction, (x_i). Therefore,

$$M_V = \Sigma M_i y_i = \Sigma M_i \left(\frac{P x_i}{P_{VA}} \right) \tag{1-10}$$

where:

P_{VA}, total vapor pressure of the stored liquid, by Raoult's Law, is:

$$P_{VA} = \Sigma P x_i \tag{1-11}$$

For more detailed information, please refer to Section 7.1.4.

2. True vapor pressure is the equilibrium partial pressure exerted by a volatile organic liquid, as defined by ASTM-D 2879 or as obtained from standard reference texts. Reid vapor pressure is the absolute vapor pressure of volatile crude oil and volatile nonviscous petroleum liquids, except liquified petroleum gases, as determined by ASTM-D-323. True vapor pressures for organic liquids can be determined from Table 7.1-3. True vapor pressure can be determined for crude oils using Figures 7.1-13a and 7.1-13b. For refined stocks (gasolines and naphthas), Table 7.1-2 or Figures 7.1-14a and 7.1-14b can be used. In order to use Figures 7.1-13a, 7.1-13b, 7.1-14a, or 7.1-14b, the stored liquid surface temperature, T_{LA}, must be determined in degrees Fahrenheit. See Note 3 to determine T_{LA}.

Alternatively, true vapor pressure for selected petroleum liquid stocks, at the stored liquid surface temperature, can be determined using the following equation:

$$P_{VA} = \exp\,[A - (B/T_{LA})] \tag{1-12a}$$

where:

exp = exponential function

A = constant in the vapor pressure equation, dimensionless

B = constant in the vapor pressure equation, °R

T_{LA} = daily average liquid surface temperature, °R

P_{VA} = true vapor pressure, psia

For selected petroleum liquid stocks, physical property data are presented in Table 7.1-2. For refined petroleum stocks, the constants A and B can be calculated from the equations presented in Figure 7.1-15 and the distillation slopes presented in Table 7.1-4. For crude oil stocks, the constants A and B can be calculated from the equations presented in Figure 7.1-16. Note that in Equation 1-12a, T_{LA} is determined in degrees Rankine instead of degrees Fahrenheit.

The true vapor pressure of organic liquids at the stored liquid temperature can be estimated by Antoine's equation:

$$\log P_{VA} = A - \frac{B}{T_{LA} + C} \qquad (1\text{-}12b)$$

where:

A = constant in vapor pressure equation

B = constant in vapor pressure equation

C = constant in vapor pressure equation

T_{LA} = daily average liquid surface temperature, °C

P_{VA} = vapor pressure at average liquid surface temperature, mm Hg

For organic liquids, the values for the constants A, B, and C are listed in Table 7.1-5. Note that in Equation 1-12b, T_{LA} is determined in degrees Celsius instead of degrees Rankine. Also, in Equation 1-12b, P_{VA} is determined in mm of Hg rather than psia (760 mm Hg = 14.7 psia).

3. If the daily average liquid surface temperature, T_{LA}, is unknown, it is calculated using the following equation:

$$T_{LA} = 0.44T_{AA} + 0.56T_B + 0.0079\ \alpha I \qquad (1\text{-}13)$$

where:

T_{LA} = daily average liquid surface temperature, °R

T_{AA} = daily average ambient temperature, °R; see Note 4

T_B = liquid bulk temperature, °R; see Note 5

α = tank paint solar absorptance, dimensionless; see Table 7.1-6

I = daily total solar insolation factor, Btu/ft^2·d; see Table 7.1-7

If T_{LA} is used to calculate P_{VA} from Figures 7.1-13a, 7.1-13b, 7.1-14a, or 7.1-14b, T_{LA} must be converted from degrees Rankine to degrees Fahrenheit (°F = °R - 460). If T_{LA} is used to calculate P_{VA} from Equation 1-12b, T_{LA} must be converted from degrees Rankine to degrees Celsius

(°C = [°R - 492]/1.8). Equation 1-13 should not be used to estimate liquid surface temperature from insulated tanks. In the case of insulated tanks, the average liquid surface temperature should be based on liquid surface temperature measurements from the tank.

4. The daily average ambient temperature, T_{AA}, is calculated using the following equation:

$$T_{AA} = (T_{AX} + T_{AN})/2 \tag{1-14}$$

where:

T_{AA} = daily average ambient temperature, °R

T_{AX} = daily maximum ambient temperature, °R

T_{AN} = daily minimum ambient temperature, °R

Table 7.1-7 gives values of T_{AX} and T_{AN} for selected U. S. cities.

5. The liquid bulk temperature, T_B, is calculated using the following equation:

$$T_B = T_{AA} + 6\alpha - 1 \tag{1-15}$$

where:

T_B = liquid bulk temperature, °R

T_{AA} = daily average ambient temperature, °R, as calculated in Note 4

α = tank paint solar absorptance, dimensionless; see Table 7.1-6.

Vapor Space Expansion Factor, K_E - The vapor space expansion factor, K_E, is calculated using the following equation:

$$K_E = \frac{\Delta T_V}{T_{LA}} + \frac{\Delta P_V - \Delta P_B}{P_A - P_{VA}} \tag{1-16}$$

where:

ΔT_V = daily vapor temperature range, °R; see Note 1

ΔP_V = daily vapor pressure range, psi; see Note 2

ΔP_B = breather vent pressure setting range, psi; see Note 3

P_A = atmospheric pressure, psia

P_{VA} = vapor pressure at daily average liquid surface temperature, psia; see Notes 1 and 2 for Equation 1-9

T_{LA} = daily average liquid surface temperature, °R; see Note 3 for Equation 1-9

Notes:

1. The daily vapor temperature range, ΔT_V, is calculated using the following equation:

$$\Delta T_V = 0.72\ \Delta T_A + 0.028\ \alpha I \qquad (1\text{-}17)$$

where:

ΔT_V = daily vapor temperature range, °R

ΔT_A = daily ambient temperature range, °R; see Note 4

α = tank paint solar absorptance, dimensionless; see Table 7.1-6

I = daily total solar insolation factor, Btu/ft^2·d; see Table 7.1-7

2. The daily vapor pressure range, ΔP_V, can be calculated using the following equation:

$$\Delta P_V = P_{VX} - P_{VN} \qquad (1\text{-}18)$$

where:

ΔP_V = daily vapor pressure range, psia

P_{VX} = vapor pressure at the daily maximum liquid surface temperature, psia; see Note 5

P_{VN} = vapor pressure at the daily minimum liquid surface temperature, psia; see Note 5

The following method can be used as an alternate means of calculating ΔP_V for petroleum liquids:

$$\Delta P_V = \frac{0.50\ B\ P_{VA}\ \Delta T_V}{T_{LA}^{\ 2}} \qquad (1\text{-}19)$$

where:

ΔP_V = daily vapor pressure range, psia

B = constant in the vapor pressure equation, °R; see Note 2 to Equation 1-9

P_{VA} = vapor pressure at the daily average liquid surface temperature, psia; see Notes 1 and 2 to Equation 1-9

T_{LA} = daily average liquid surface temperature, °R; see Note 3 to Equation 1-9

ΔT_V = daily vapor temperature range, °R; see Note 1

3. The breather vent pressure setting range, ΔP_B, is calculated using the following equation:

$$\Delta P_B = P_{BP} - P_{BV} \tag{1-20}$$

where:

ΔP_B = breather vent pressure setting range, psig

P_{BP} = breather vent pressure setting, psig

P_{BV} = breather vent vacuum setting, psig

If specific information on the breather vent pressure setting and vacuum setting is not available, assume 0.03 psig for P_{BP} and -0.03 psig for P_{BV} as typical values. If the fixed roof tank is of bolted or riveted construction in which the roof or shell plates are not vapor tight, assume that $\Delta P_B = 0$, even if a breather vent is used. The estimating equations for fixed roof tanks do not apply to either low or high pressure tanks. If the breather vent pressure or vacuum setting exceeds 1.0 psig, the standing storage losses could potentially be negative.

4. The daily ambient temperature range, ΔT_A, is calculated using the following equation:

$$\Delta T_A = T_{AX} - T_{AN} \tag{1-21}$$

where:

ΔT_A = daily ambient temperature range, °R

T_{AX} = daily maximum ambient temperature, °R

T_{AN} = daily minimum ambient temperature, °R

Table 7.1-7 gives values of T_{AX} and T_{AN} for selected cities in the United States.[11]

5. The vapor pressures associated with daily maximum and minimum liquid surface temperature, P_{VX} and P_{VN}, respectively are calculated by substituting the corresponding temperatures, T_{LX} and T_{LN}, into the vapor pressure function discussed in Notes 1 and 2 to Equation 1-9. If T_{LX} and T_{LN} are unknown, Figure 7.1-17 can be used to calculate their values.

Vented Vapor Saturation Factor, K_S - The vented vapor saturation factor, K_S, is calculated using the following equation:

$$K_S = \frac{1}{1 + 0.053 P_{VA} H_{VO}} \tag{1-22}$$

where:

K_S = vented vapor saturation factor, dimensionless

P_{VA} = vapor pressure at daily average liquid surface temperature, psia; see Notes 1 and 2 to Equation 1-9

H_{VO} = vapor space outage, ft, as calculated in Equation 1-4

Working Loss - The working loss, L_W, can be estimated from:

$$L_W = 0.0010\ M_V P_{VA} Q K_N K_P, \tag{1-23}$$

where:

L_W = working loss, lb/yr

M_V = vapor molecular weight, lb/lb-mole; see Note 1 to Equation 1-9

P_{VA} = vapor pressure at daily average liquid surface temperature, psia; see Notes 1 and 2 to Equation 1-9

Q = annual net throughput (tank capacity [bbl] times annual turnover rate), bbl/yr

K_N = turnover factor, dimensionless; see Figure 7.1-18
for turnovers > 36, $K_N = (180 + N)/6N$
for turnovers ≤ 36, $K_N = 1$

N = number of turnovers per year, dimensionless

$$N = \frac{5.614Q}{V_{LX}} \tag{1-24}$$

where:

N = number of turnovers per year, dimensionless
Q = annual net throughput, bbl/yr
V_{LX} = tank maximum liquid volume, ft^3

and

$$V_{LX} = \frac{\pi}{4} D^2 H_{LX} \tag{1-25}$$

where:

D = diameter, ft

H_{LX} = maximum liquid height, ft

K_P = working loss product factor, dimensionless, 0.75 for crude oils. For all other organic liquids, $K_P = 1$

7.1.3.2 Total Losses From Floating Roof Tanks[3-5,13,15-17] –

Total floating roof tank emissions are the sum of rim seal, withdrawal, deck fitting, and deck seam losses. The equations presented in this subsection apply only to floating roof tanks. The equations are not intended to be used in the following applications:

1. To estimate losses from unstable or boiling stocks or from mixtures of hydrocarbons or petrochemicals for which the vapor pressure is not known or cannot readily be predicted;

2. To estimate losses from closed internal or closed domed external floating roof tanks (tanks vented only through a pressure/vacuum vent); or

3. To estimate losses from tanks in which the materials used in the rim seal and/or deck fittings are either deteriorated or significantly permeated by the stored liquid.

Total losses from floating roof tanks may be written as:

$$L_T = L_R + L_{WD} + L_F + L_D \tag{2-1}$$

where:

L_T = total loss, lb/yr

L_R = rim seal loss, lb/yr; see Equation 2-2

L_{WD} = withdrawal loss, lb/yr; see Equation 2-4

L_F = deck fitting loss, lb/yr; see Equation 2-5

L_D = deck seam loss (internal floating roof tanks only), lb/yr; see Equation 2-9

Rim Seal Loss - Rim seal loss from floating roof tanks can be estimated using the following equation:

$$L_R = (K_{Ra} + K_{Rb}\, v^n) D P^* M_V K_C \tag{2-2}$$

where:

L_R = rim seal loss, lb/yr

K_{Ra} = zero wind speed rim seal loss factor, lb-mole/ft·yr; see Table 7.1-8

K_{Rb} = wind speed dependent rim seal loss factor, lb-mole/(mph)^{n}ft·yr; see Table 7.1-8

v = average ambient wind speed at tank site, mph; see Note 1

n = seal-related wind speed exponent, dimensionless; see Table 7.1-8

P^* = vapor pressure function, dimensionless; see Note 2

$$P^* = \frac{P_{VA}/P_A}{[1 + (1 - [P_{VA}/P_A])^{0.5}]^2} \tag{2-3}$$

where:

P_{VA} = vapor pressure at daily average liquid surface temperature, psia; See Notes 1 and 2 to Equation 1-9 and Note 3 below

P_A = atmospheric pressure, psia

D = tank diameter, ft

M_V = average vapor molecular weight, lb/lb-mole; see Note 1 to Equation 1-9,

K_C = product factor; K_C = 0.4 for crude oils; K_C = 1 for all other organic liquids.

Notes:

1. If the ambient wind speed at the tank site is not available, use wind speed data from the nearest local weather station or values from Table 7.1-9. If the tank is an internal or domed external floating roof tank, the value of v is zero.

2. P^* can be calculated or read directly from Figure 7.1-19.

3. The API recommends using the stock liquid temperature to calculate P_{VA} for use in Equation 2-3 in lieu of the liquid surface temperature. If the stock liquid temperature is unknown, API recommends the following equations to estimate the stock temperature:

Tank Color	Average Annual Stock Temperature, T_s (°F)
White	$T_{AA} + 0^a$
Aluminum	$T_{AA} + 2.5$
Gray	$T_{AA} + 3.5$
Black	$T_{AA} + 5.0$

[a]T_{AA} is the average annual ambient temperature in degrees Fahrenheit.

Withdrawal Loss - The withdrawal loss from floating roof storage tanks can be estimated using Equation 2-4.

$$L_{WD} = \frac{(0.943)QCW_L}{D}\left[1 + \frac{N_C F_C}{D}\right] \qquad (2\text{-}4)$$

where:

L_{WD} = withdrawal loss, lb/yr

Q = annual throughput (tank capacity [bbl] times annual turnover rate), bbl/yr

C = shell clingage factor, bbl/1,000 ft^2; see Table 7.1-10

W_L = average organic liquid density, lb/gal; see Note 1

D = tank diameter, ft

0.943 = constant, 1,000 $ft^3 \cdot gal/bbl^2$

N_C = number of fixed roof support columns, dimensionless; see Note 2

F_C = effective column diameter, ft (column perimeter [ft]/π); see Note 3

Notes:

1. A listing of the average organic liquid density for select petrochemicals is provided in Tables 7.1-2 and 7.1-3. If W_L is not known for gasoline, an average value of 6.1 lb/gal can be assumed.

2. For a self-supporting fixed roof or an external floating roof tank:

$N_C = 0.$

For a column-supported fixed roof:

N_C = use tank-specific information or see Table 7.1-11.

3. Use tank-specific effective column diameter or

F_C = 1.1 for 9-inch by 7-inch built-up columns, 0.7 for 8-inch-diameter pipe columns, and 1.0 if column construction details are not known

Deck Fitting Loss - Deck fitting losses from floating roof tanks can be estimated by the following equation:

$$L_F = F_F P^* M_V K_C \tag{2-5}$$

where:

L_F = the deck fitting loss, lb/yr

F_F = total deck fitting loss factor, lb-mole/yr

$$F_F = [(N_{F_1} K_{F_1}) + (N_{F_2} K_{F_2}) + \ldots + (N_{F_{n_f}} K_{F_{n_f}})] \tag{2-6}$$

where:

N_{F_i} = number of deck fittings of a particular type ($i = 0,1,2,\ldots,n_f$), dimensionless

K_{F_i} = deck fitting loss factor for a particular type fitting ($i = 0,1,2,\ldots,n_f$), lb-mole/yr; see Equation 2-7

n_f = total number of different types of fittings, dimensionless

P^*, M_V, K_C are as defined for Equation 2-2.

The value of F_F may be calculated by using actual tank-specific data for the number of each fitting type (N_F) and then multiplying by the fitting loss factor for each fitting (K_F).

The deck fitting loss factor, K_{F_i} for a particular type of fitting, can be estimated by the following equation:

$$K_{F_i} = K_{Fa_i} + K_{Fb_i} (K_v v)^{m_i} \quad (2\text{-}7)$$

where:

K_{F_i} = loss factor for a particular type of deck fitting, lb-mole/yr

K_{Fa_i} = zero wind speed loss factor for a particular type of fitting, lb-mole/yr

K_{Fb_i} = wind speed dependent loss factor for a particular type of fitting, lb-mole/(mph)^m·yr

m_i = loss factor for a particular type of deck fitting, dimensionless

i = 1, 2, ..., n, dimensionless

K_v = fitting wind speed correction factor, dimensionless; see below

v = average ambient wind speed, mph

For external floating roof tanks, the fitting wind speed correction factor, K_v, is equal to 0.7. For internal and domed external floating roof tanks, the value of v in Equation 2-7 is zero and the equation becomes:

$$K_{F_i} = K_{Fa_i} \quad (2\text{-}8)$$

Loss factors K_{Fa}, K_{Fb}, and m are provided in Table 7.1-12 for the most common deck fittings used on floating roof tanks. These factors apply only to typical deck fitting conditions and when the average ambient wind speed is below 15 miles per hour. Typical numbers of deck fittings for floating roof tanks are presented in Tables 7.1-11, 7.1-12, 7.1-13, 7.1-14, and 7.1-15.

Deck Seam Loss - Neither welded deck internal floating roof tanks nor external floating roof tanks have deck seam losses. Internal floating roof tanks with bolted decks may have deck seam losses. Deck seam loss can be estimated by the following equation:

$$L_D = K_D S_D D^2 P^* M_V K_C \quad (2\text{-}9)$$

where:

K_D = deck seam loss per unit seam length factor, lb-mole/ft-yr

= 0.0 for welded deck

= 0.14 for bolted deck; see Note

S_D = deck seam length factor, ft/ft^2

$$= \frac{L_{seam}}{A_{deck}}$$

where:

L_{seam} = total length of deck seams, ft

A_{deck} = area of deck, $ft^2 = \pi D^2/4$

D, P^*, M_V, and K_C are as defined for Equation 2-2

If the total length of the deck seam is not known, Table 7.1-16 can be used to determine S_D. For a deck constructed from continuous metal sheets with a 7-ft spacing between the seams, a value of 0.14 ft/ft^2 can be used. A value of 0.33 ft/ft^2 can be used for S_D when a deck is constructed from rectangular panels 5 ft by 7.5 ft. Where tank-specific data concerning width of deck sheets or size of deck panels are unavailable, a default value for S_D can be assigned. A value of 0.20 ft/ft^2 can be assumed to represent the most common bolted decks currently in use.

Note: Recently vendors of bolted decks have been using various techniques, such as gasketing the deck seams, in an effort to reduce deck seam losses. However, emission factors are not currently available in AP-42 that represent the emission reduction, if any, achieved by these techniques. Some vendors have developed specific factors for their deck designs; however, use of these factors is not recommended until approval has been obtained from the governing regulatory agency or permitting authority.

7.1.3.3 Variable Vapor Space Tanks[18] –

Variable vapor space filling losses result when vapor is displaced by liquid during filling operations. Since the variable vapor space tank has an expandable vapor storage capacity, this loss is not as large as the filling loss associated with fixed roof tanks. Loss of vapor occurs only when the tank's vapor storage capacity is exceeded. Equation 3-1 assumes that one-fourth of the expansion capacity is available at the beginning of each transfer.

Variable vapor space system filling losses can be estimated from:

$$L_V=(2.40 \times 10^{-2})\ (M_V P_{VA}/V_1)\ [(V_1) - (0.25\ V_2 N_2)] \qquad (3\text{-}1)$$

where:

L_V = variable vapor space filling loss, lb/1,000 gal throughput

M_V = molecular weight of vapor in storage tank, lb/lb-mole; see Note 1 to Equation 1-9

P_{VA} = true vapor pressure at the daily average liquid surface temperature, psia; see Notes 1 and 2 to Equation 1-9

V_1 = volume of liquid pumped into system, throughput, bbl/yr

V_2 = volume expansion capacity of system, bbl; see Note 1

N_2 = number of transfers into system, dimensionless; see Note 2

Notes:

1. V_2 is the volume expansion capacity of the variable vapor space achieved by roof lifting or diaphragm flexing.

2. N_2 is the number of transfers into the system during the time period that corresponds to a throughput of V_1.

The accuracy of Equation 3-1 is not documented. Special tank operating conditions may result in actual losses significantly different from the estimates provided by Equation 3-1. For example, if one or more tanks with interconnected vapor spaces are filled while others are emptied simultaneously, all or part of the expelled vapors will be transferred to the tank, or tanks, being emptied. This is called balanced pumping. Equation 3-1 does not account for balanced pumping, and will overestimate losses under this condition. It should also be noted that, although not developed for use with heavier petroleum liquids such as kerosenes and fuel oils, the equation is recommended for use with heavier petroleum liquids in the absence of better data.

7.1.3.4 Pressure Tanks –

Losses occur during withdrawal and filling operations in low-pressure (2.5 to 15 psig) tanks when atmospheric venting occurs. High-pressure tanks are considered closed systems, with virtually no emissions. Vapor recovery systems are often found on low-pressure tanks. Fugitive losses are also associated with pressure tanks and their equipment, but with proper system maintenance, these losses are considered insignificant. No appropriate correlations are available to estimate vapor losses from pressure tanks.

7.1.3.5 Variations Of Emission Estimation Procedures –

All of the emission estimation procedures presented in Section 7.1.3 can be used to estimate emissions for shorter time periods by manipulating the inputs to the equations for the time period in question. For all of the emission estimation procedures, the daily average liquid surface temperature should be based on the appropriate temperature and solar insolation data for the time period over which the estimate is to be evaluated. The subsequent calculation of the vapor pressure should be based on the corrected daily liquid surface temperature. For example, emission calculations for the month of June would be based only on the meteorological data for June. It is important to note that a 1-month time frame is recommended as the shortest time period for which emissions should be estimated.

In addition to the temperature and vapor pressure corrections, the constant in the standing storage loss equation for fixed roof tanks would need to be revised based on the actual time frame used. The constant, 365, is based on the number of days in a year. To change the equation for a different time period, the constant should be changed to the appropriate number of days in the time period for which emissions are being estimated. The only change that would need to be made to the working loss equation for fixed roof tanks would be to change the throughput per year to the throughput during the time period for which emissions are being estimated.

Other than changing the meteorological data and the vapor pressure data, the only changes needed for the floating roof rim seal, deck fitting, and deck seam losses would be to modify the time frame by dividing the individual losses by the appropriate number of days or months. The only change to the withdrawal losses would be to change the throughput to the throughput for the time period for which emissions are being estimated.

Another variation that is frequently made to the emission estimation procedures is an adjustment in the working or withdrawal loss equations if the tank is operated as a surge tank or constant level tank. For constant level tanks or surge tanks where the throughput and turnovers are high but the liquid level in the tank remains relatively constant, the actual throughput or turnovers should not be used in the working loss or withdrawal loss equations. For these tanks, the turnovers should be estimated by determining the average change in the liquid height. The average change in height should then be divided by the total shell height. This adjusted turnover value should then be multiplied by the actual throughput to obtain the net throughput for use in the loss equations. Alternatively, a default turnover rate of four could be used based on data from these type tanks.

7.1.4 Hazardous Air Pollutants (HAP) Speciation Methodology

In some cases it may be important to know the annual emission rate for a component (e. g., HAP) of a stored liquid mixture. There are two basic approaches that can be used to estimate emissions for a single component of a stored liquid mixture. One approach involves calculating the total losses based upon the known physical properties of the mixture (i. e., gasoline) and then determining the individual component losses by multiplying the total loss by the weight fraction of the desired component. The second approach is similar to the first approach except that the mixture properties are unknown; therefore, the mixture properties are first determined based on the composition of the liquid mixture.

Case 1 — If the physical properties of the mixture are known (P_{VA}, M_V, M_L and W_L), the total losses from the tank should be estimated using the procedures described previously for the particular tank type. The component losses are then determined from either Equation 4-1 or 4-2. For fixed roof tanks, the emission rate for each individual component can be estimated by:

$$L_{T_i} = (Z_{V_i})(L_T) \tag{4-1}$$

where:

L_{T_i} = emission rate of component i, lb/yr

Z_{V_i} = weight fraction of component i in the vapor, lb/lb

L_T = total losses, lb/yr

For floating roof tanks, the emission rate for each individual component can be estimated by:

$$L_{T_i} = (Z_{V_i})(L_R + L_F + L_D) + (Z_{L_i})(L_{WD}) \tag{4-2}$$

where:

L_{T_i} = emission rate of component i, lb/yr

Z_{V_i} = weight fraction of component i in the vapor, lb/lb

L_R = rim seal losses, lb/yr

L_F = deck fitting losses, lb/yr

L_D = deck seam losses, lb/yr

Z_{L_i} = weight fraction of component i in the liquid, lb/lb

L_{WD} = withdrawal losses, lb/yr

If Equation 4-1 is used in place of Equation 4-2 for floating roof tanks, the value obtained will be approximately the same value as that achieved with Equation 4-2 because withdrawal losses are typically minimal for floating roof tanks.

In order to use Equations 4-1 and 4-2, the weight fraction of the desired component in the liquid and vapor phase is needed. The liquid weight fraction of the desired component is typically known or can be readily calculated for most mixtures. In order to calculate the weight fraction in the vapor phase, Raoult's Law must first be used to determine the partial pressure of the component. The partial pressure of the component can then be divided by the total vapor pressure of the mixture to determine the mole fraction of the component in the vapor phase. Raoult's Law states that the mole fraction of the component in the liquid (x_i) multiplied by the vapor pressure of the pure component (at the daily average liquid surface temperature) (P) is equal to the partial pressure (P_i) of that component:

$$P_i = (P)(x_i) \tag{4-3}$$

where:

P_i = partial pressure of component i, psia

P = vapor pressure of pure component i at the daily average liquid surface temperature, psia

x_i = liquid mole fraction, lb-mole/lb-mole

The vapor pressure of each component can be calculated from Antoine's equation or found in standard references, as shown in Section 7.1.3.1. In order to use Equation 4-3, the liquid mole fraction must be determined from the liquid weight fraction by:

$$x_i = (Z_{L_i})(M_L) \ / \ (M_i) \tag{4-4}$$

where:

x_i = liquid mole fraction of component i, lb-mole/lb-mole

Z_{L_i} = weight fraction of component i in the liquid, lb/lb

M_L = molecular weight of liquid stock, lb/lb-mole

M_i = molecular weight of component i, lb/lb-mole

If the molecular weight of the liquid is not known, the liquid mole fraction can be determined by assuming a total weight of the liquid mixture (see Example 1 in Section 7.1.5).

The liquid mole fraction and the vapor pressure of the component at the daily average liquid surface temperature can then be substituted into Equation 4-3 to obtain the partial pressure of the component. The vapor mole fraction of the component can be determined from the following equation:

$$y_i = \frac{P_i}{P_{VA}} \tag{4-5}$$

where:

y_i = vapor mole fraction of component i, lb-mole/lb-mole

P_i = partial pressure of component i, psia

P_{VA} = total vapor pressure of liquid mixture, psia

The weight fractions in the vapor phase are calculated from the mole fractions in the vapor phase.

$$Z_{V_i} = \frac{y_i M_i}{M_V} \tag{4-6}$$

where:

Z_{V_i} = vapor weight fraction of component i, lb/lb

y_i = vapor mole fraction of component i, lb-mole/lb-mole

M_i = molecular weight of component i, lb/lb-mole

M_V = molecular weight of vapor stock, lb/lb-mole

The liquid and vapor weight fractions of each desired component and the total losses can be substituted into either Equations 4-1 or 4-2 to estimate the individual component losses.

Case 2 — For cases where the mixture properties are unknown but the composition of the liquid is known (i. e., nonpetroleum organic mixtures), the equations presented above can be used to obtain a reasonable estimate of the physical properties of the mixture. For nonaqueous organic mixtures, Equation 4-3 can be used to determine the partial pressure of each component. If Equation 4-4 is used to determine the liquid mole fractions, the molecular weight of the liquid stock must be known. If the molecular weight of the liquid stock is unknown, then the liquid mole fractions can be determined by assuming a weight basis and calculating the number of moles (see Example 1 in Section 7.1.5). The partial pressure of each component can then be determined from Equation 4-3.

For special cases, such as wastewater, where the liquid mixture is a dilute aqueous solution, Henry's Law should be used instead of Raoult's Law in calculating total losses. Henry's Law states that the mole fraction of the component in the liquid phase multiplied by the Henry's Law constant for the component in the mixture is equal to the partial pressure (P_i) for that component. For wastewater, Henry's Law constants are typically provided in the form of atm·m^3/g-mole.

Therefore, the appropriate form of Henry's Law equation is:

$$P_i = (H_A)\ (C_i) \tag{4-7}$$

where:

P_i = partial pressure of component i, atm

H_A = Henry's Law constant for component i, atm·m^3/g-mole

C_i = concentration of component i in the wastewater, g-mole/m^3; see Note

Section 4.3 of AP-42 presents Henry's Law constants for selected organic liquids. The partial pressure calculated from Equation 4-7 will need to be converted from atmospheres to psia (1 atm = 14.7 psia).

Note: Typically wastewater concentrations are given in mg/liter, which is equivalent to g/m^3. To convert the concentrations to g-mole/m^3 divide the concentration by the molecular weight of the component.

The total vapor pressure of the mixture can be calculated from the sum of the partial pressures:

$$P_{VA} = \Sigma\ P_i \tag{4-8}$$

where:

P_{VA} = vapor pressure at daily average liquid surface temperature, psia

P_i = partial pressure of component i, psia

This procedure can be used to determine the vapor pressure at any temperature. After computing the total vapor pressure, the mole fractions in the vapor phase are calculated using Equation 4-5. The vapor mole fractions are used to calculate the molecular weight of the vapor, M_V. The molecular weight of the vapor can be calculated by:

$$M_V = \Sigma\ M_i y_i \tag{4-9}$$

where:

M_V = molecular weight of the vapor, lb/lb-mole

M_i = molecular weight of component i, lb/lb-mole

y_i = vapor mole fraction of component i, lb-mole/lb-mole

Another variable that may need to be calculated before estimating the total losses, if it is not available in a standard reference, is the density of the liquid, W_L. If the density of the liquid is unknown, it can be estimated based on the liquid weight fractions of each component (see Section 7.1.5, Example 3).

All of the mixture properties are now known (P_{VA}, M_V, and W_L). These values can now be used with the emission estimation procedures outlined in Section 7.1.3 to estimate total losses. After calculating the total losses, the component losses can be calculated by using either Equations 4-1 or 4-2. Prior to calculating component losses, Equation 4-6 must be used to determine the vapor weight fractions of each component.

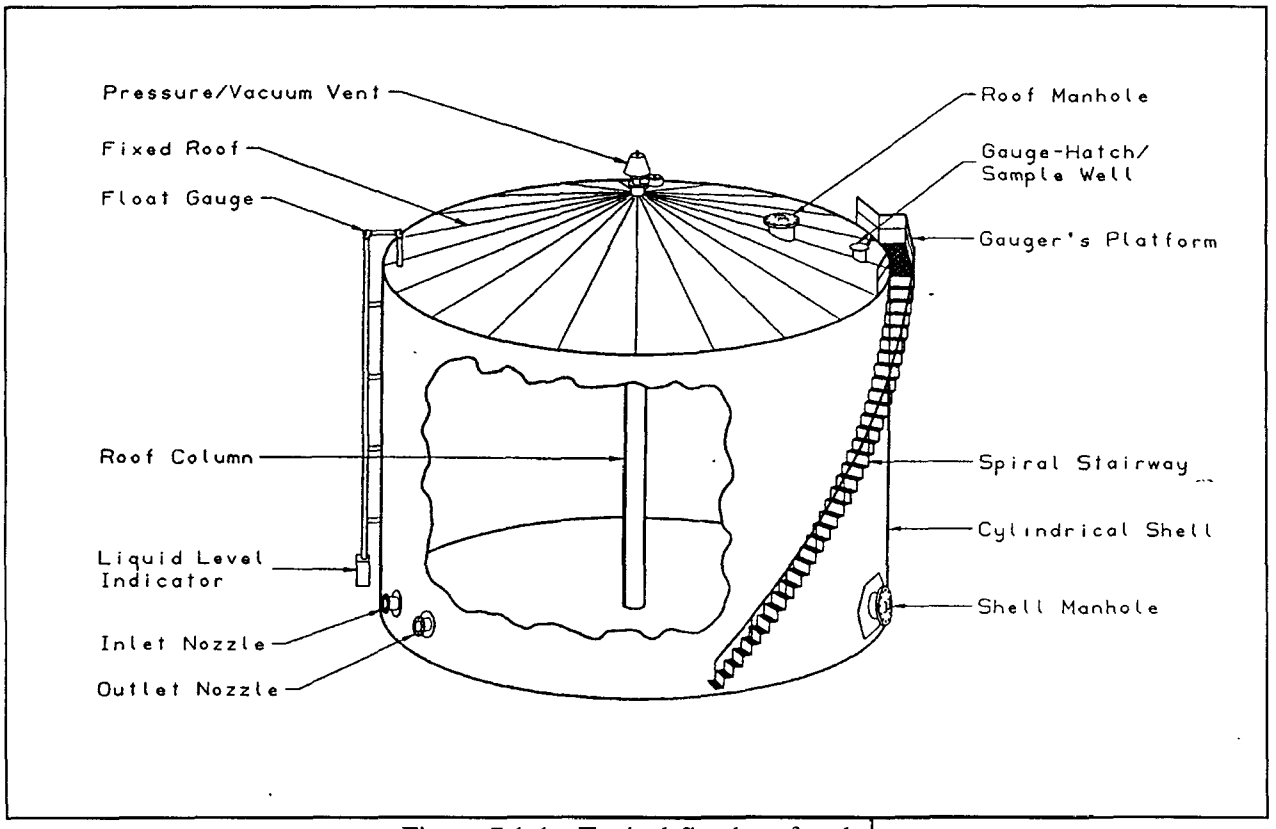

Figure 7.1-1. Typical fixed-roof tank.[1]

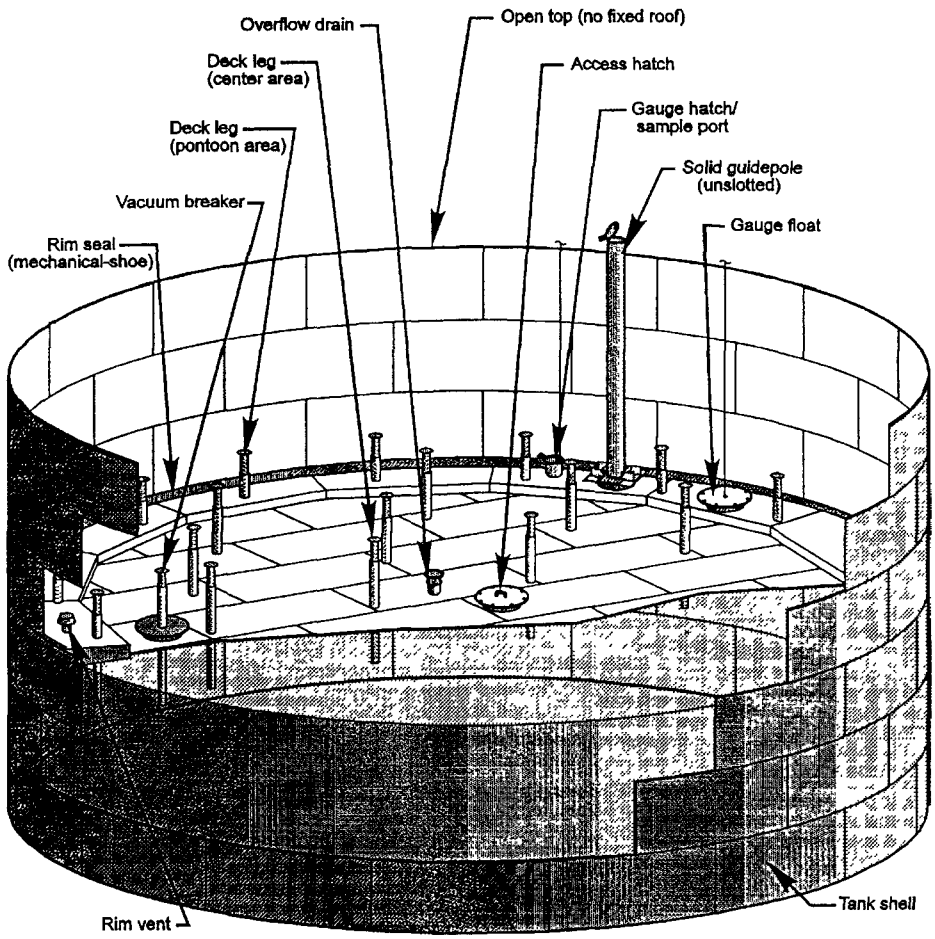

Figure 7.1-2. External floating roof tank (pontoon type).[20]

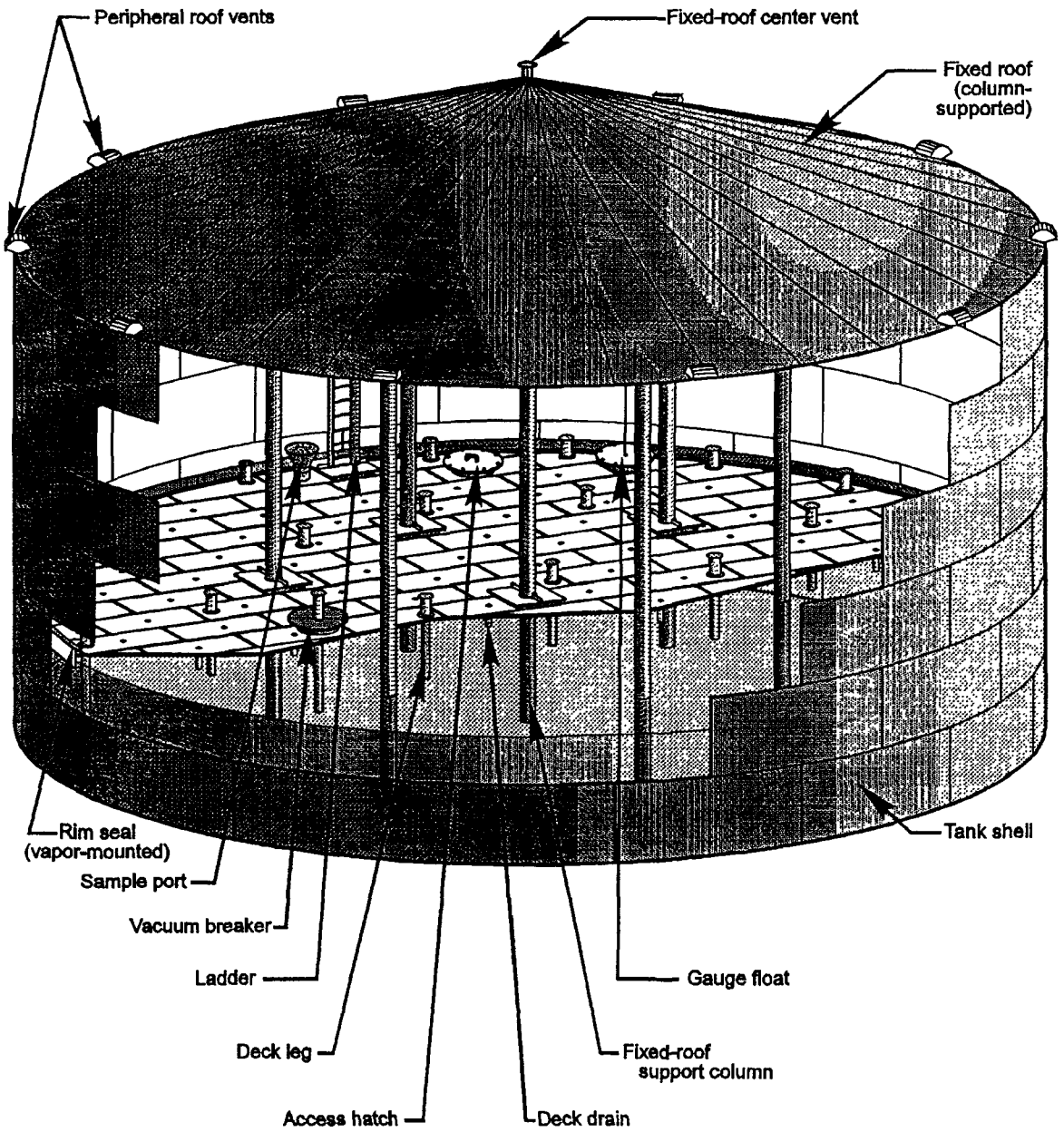

Figure 7.1-4. Internal floating roof tank.[20]

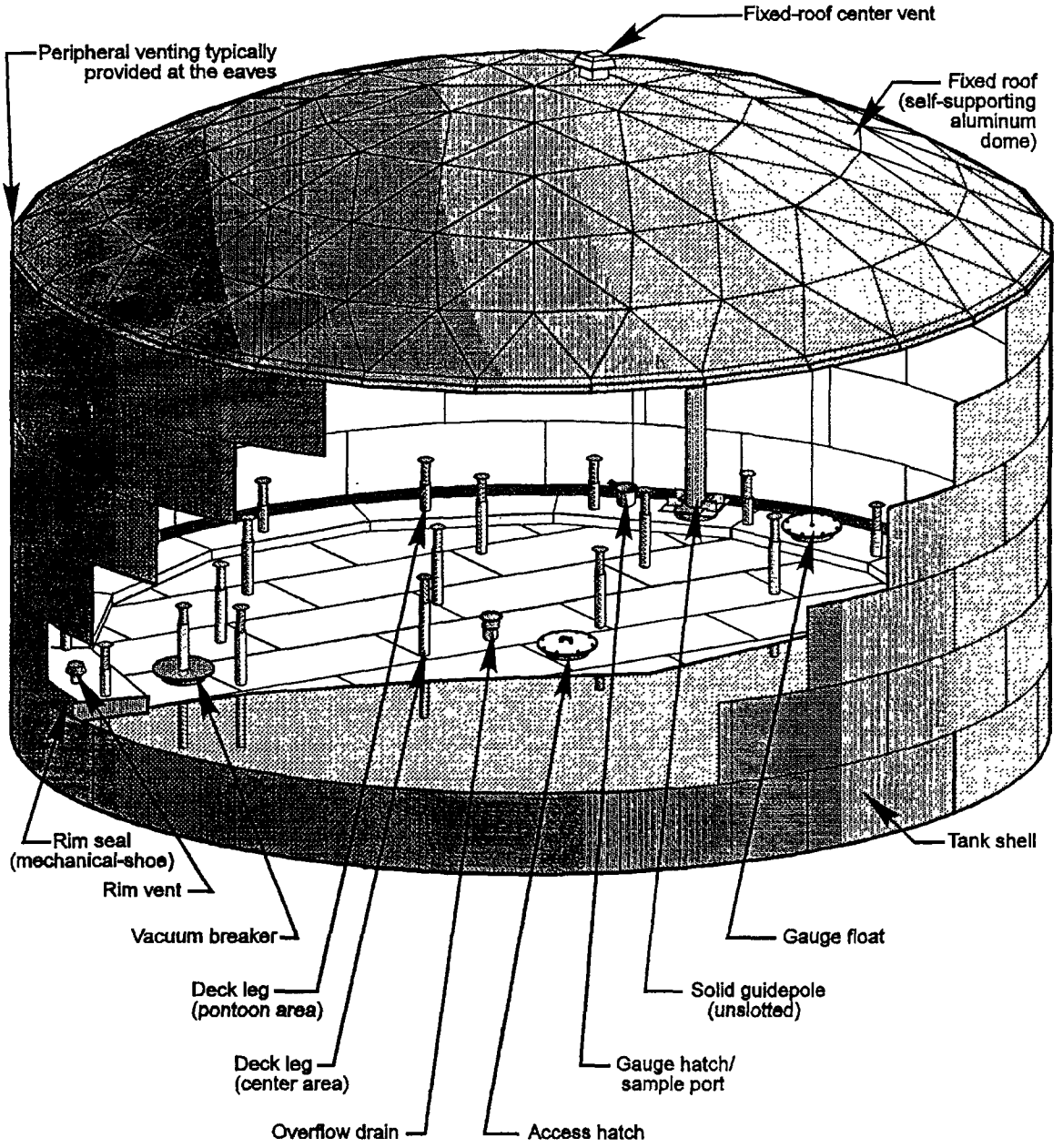

Figure 7.1-5. Domed external floating roof tank.[20]

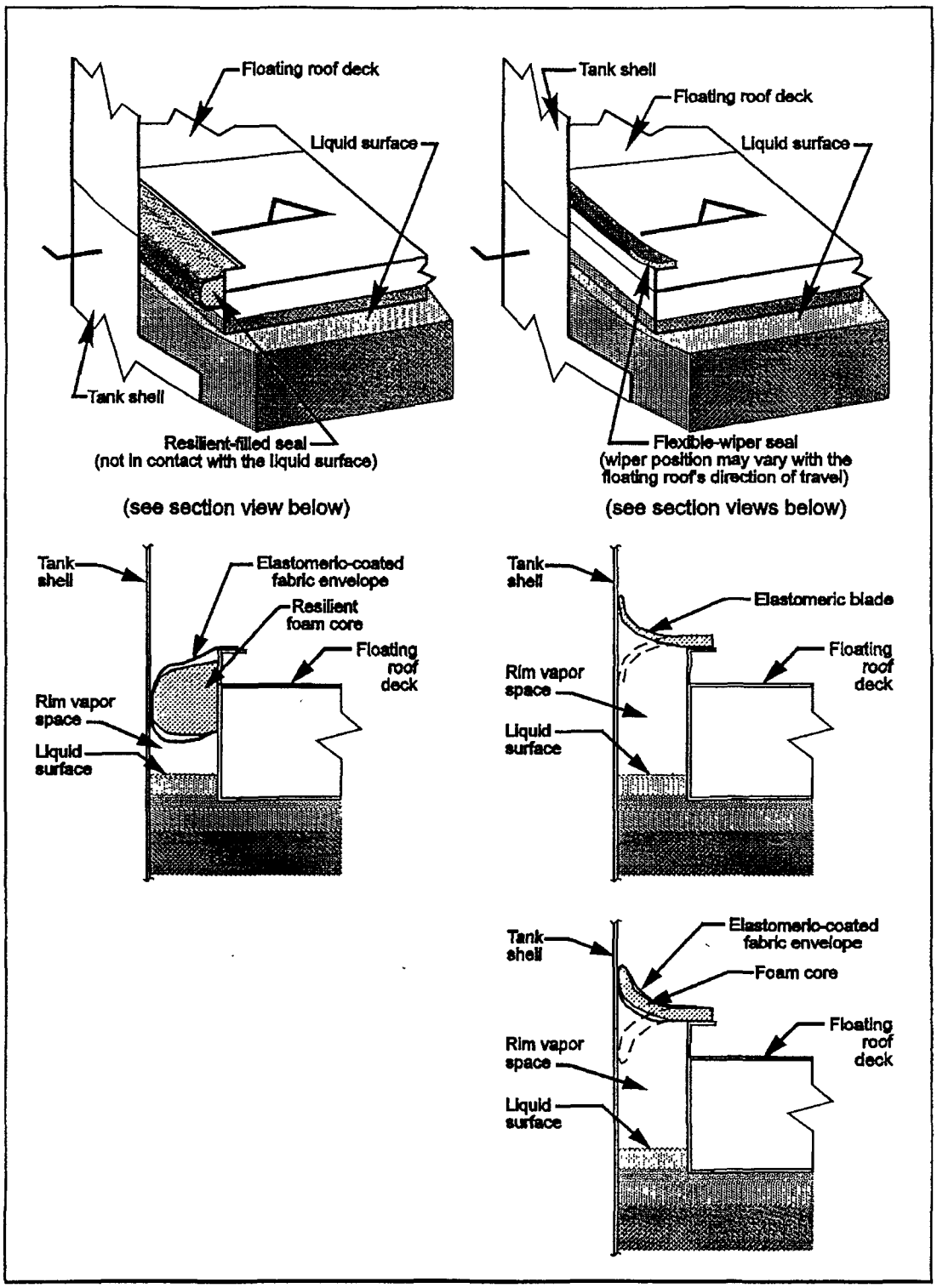

Figure 7.1-6. Vapor-mounted primary seals.[20]

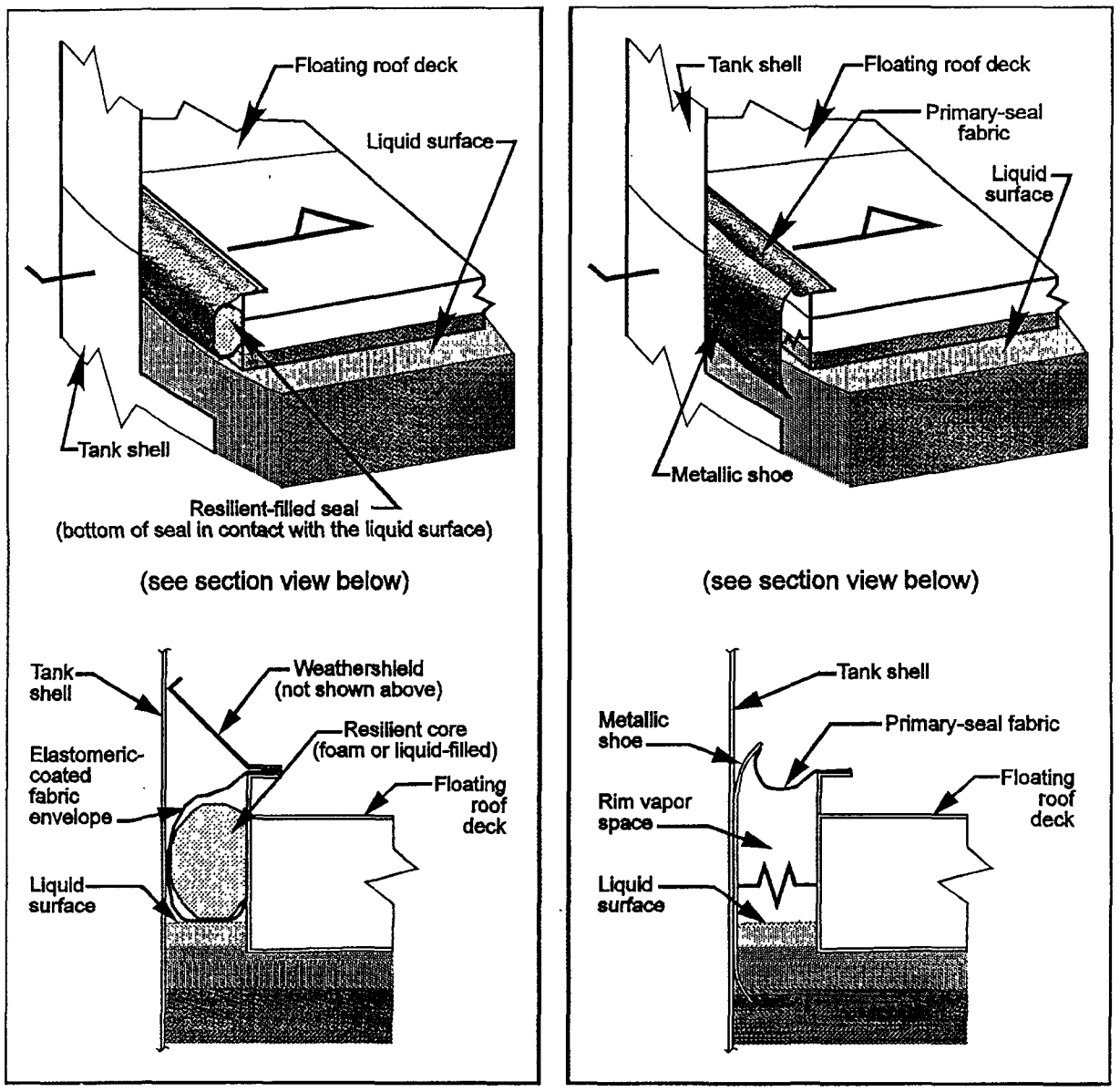

Figure 7.1-7. Liquid-mounted and mechanical shoe primary seals.[20]

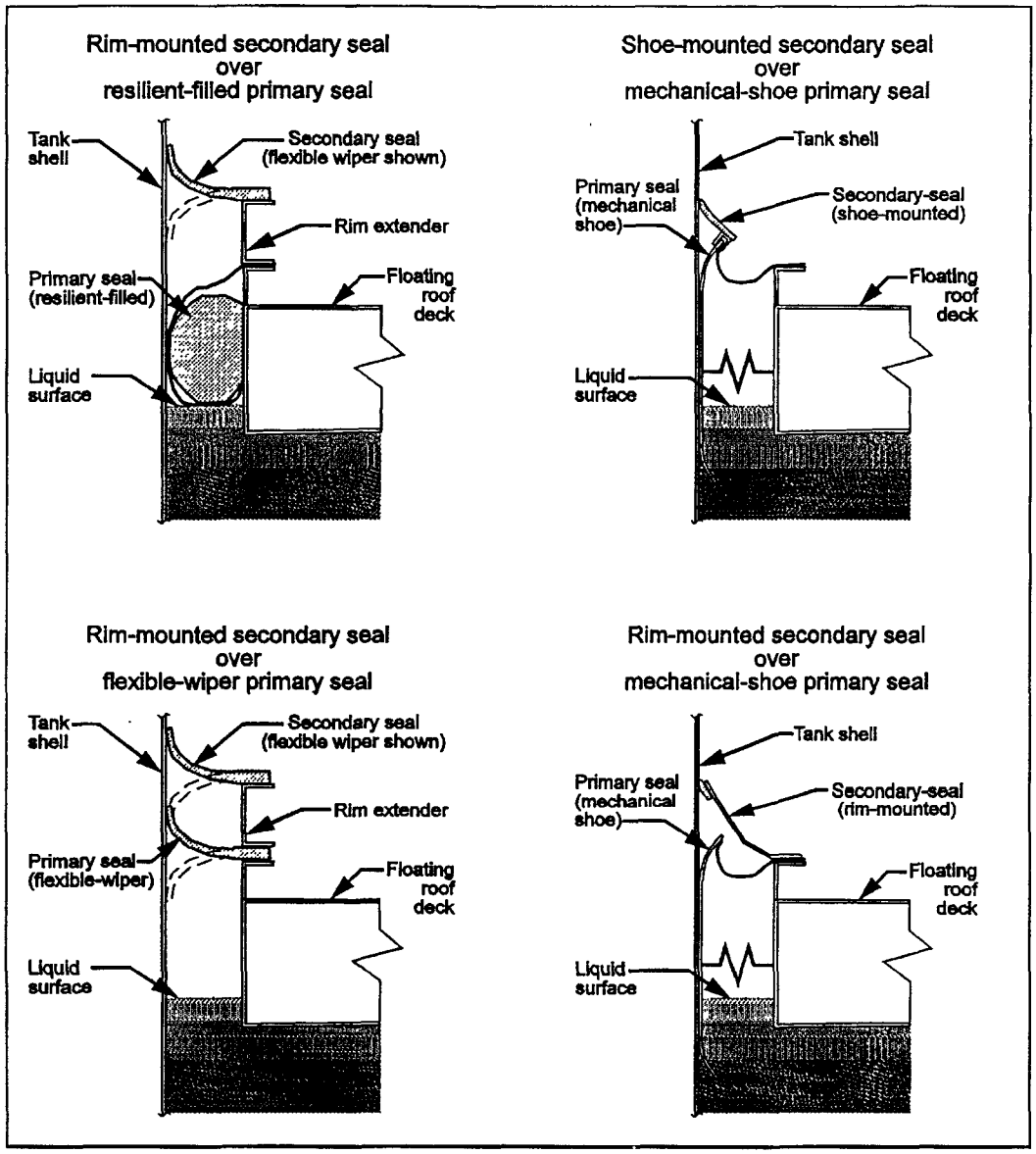

Figure 7.1-8. Secondary rim seals.[20]

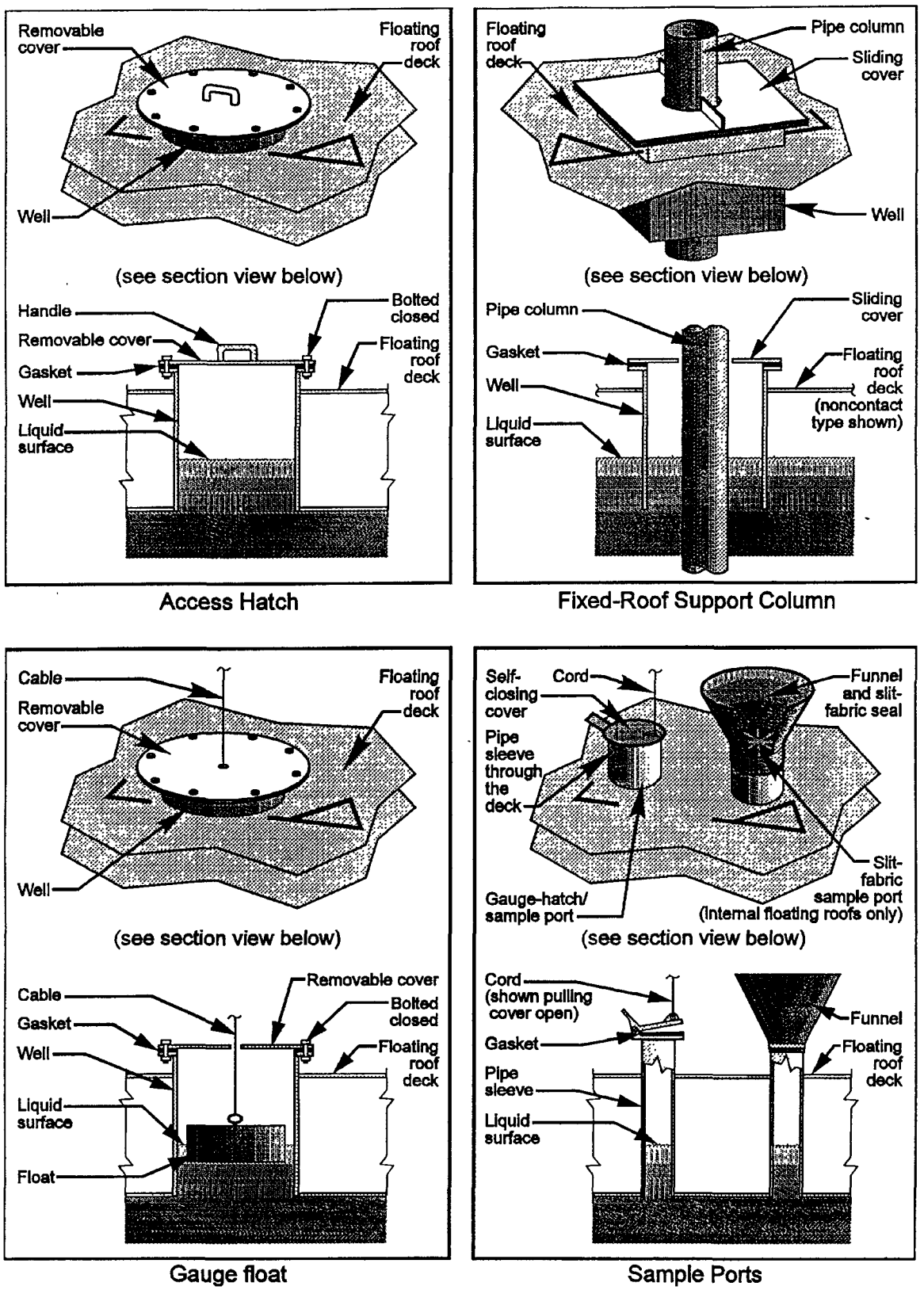

Figure 7.1-9. Deck fittings for floating roof tanks.[20]

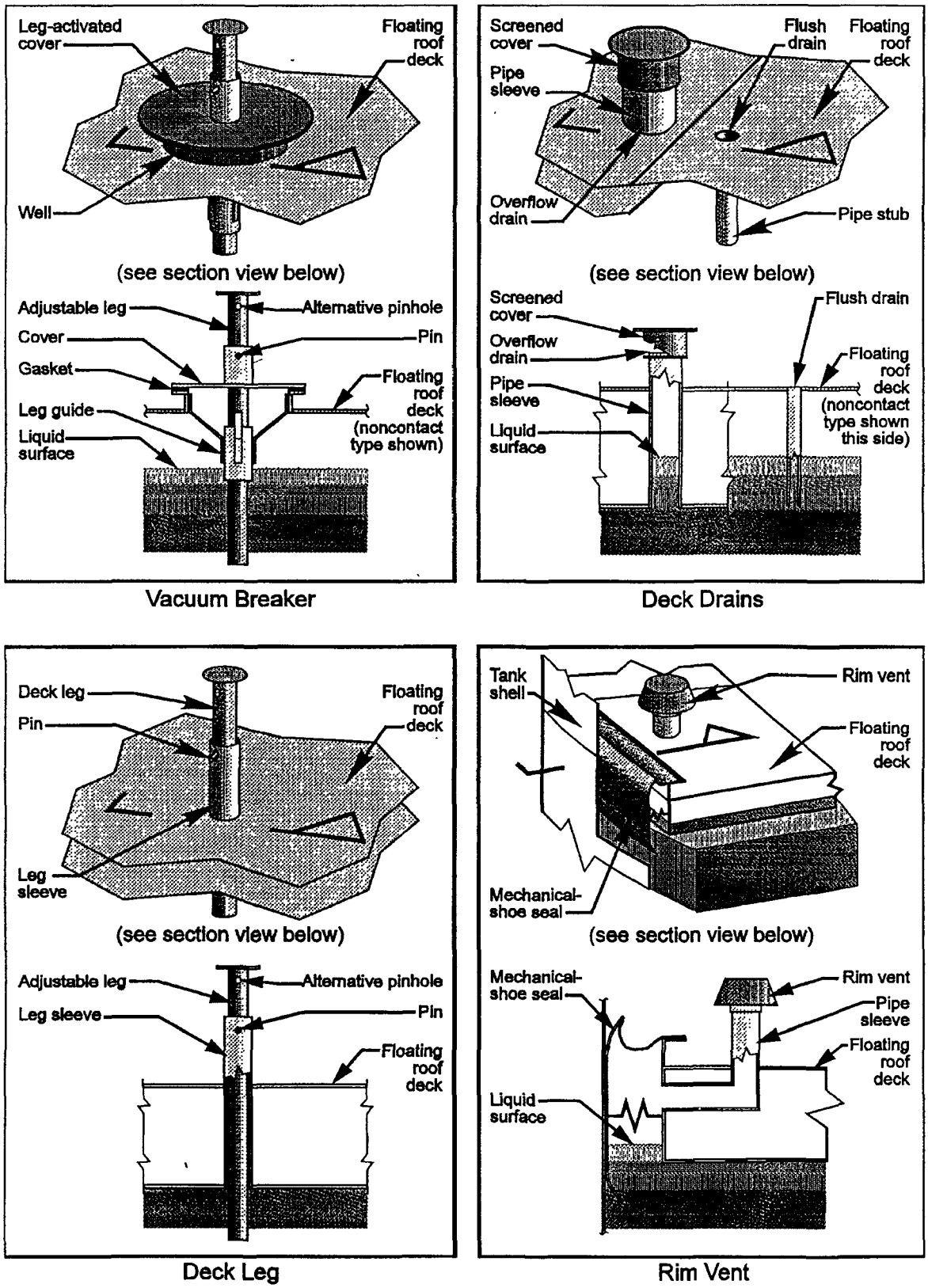

Figure 7.1-10. Deck fittings for floating roof tanks.[20]

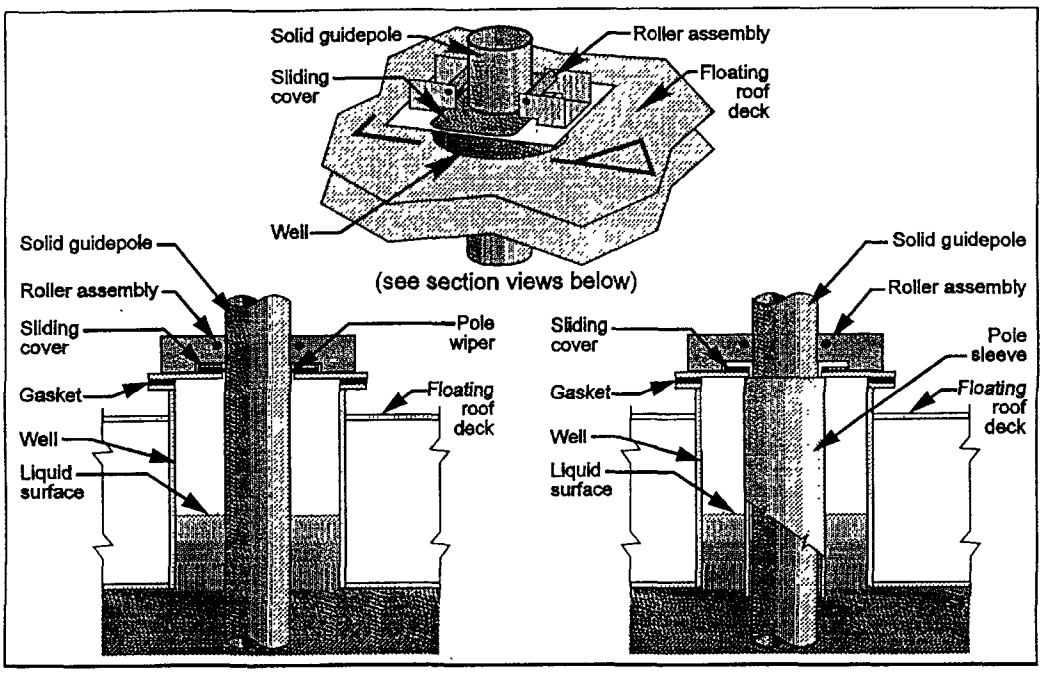

Unslotted (solid) Guidepole

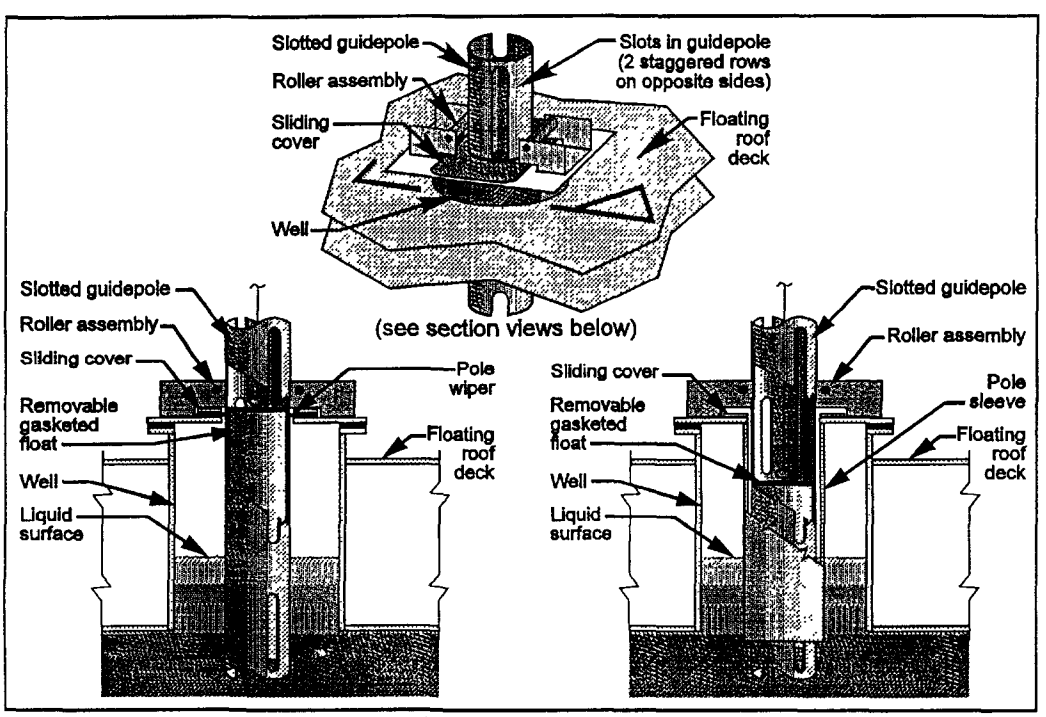

Slotted (perforated) Guidepole

Figure 7.1-11. Slotted and unslotted guidepoles.[20]

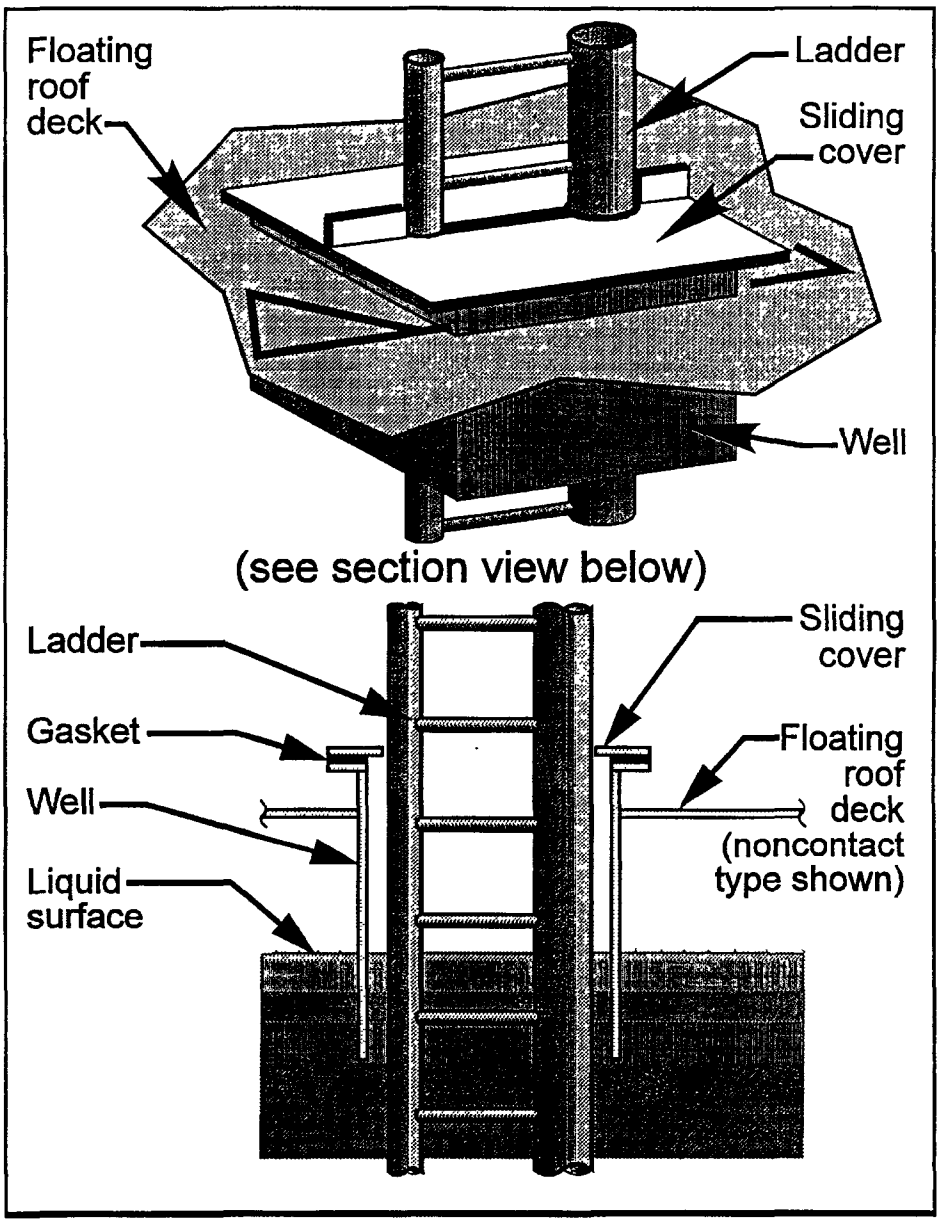

Figure 7.1-12. Ladder well.[20]

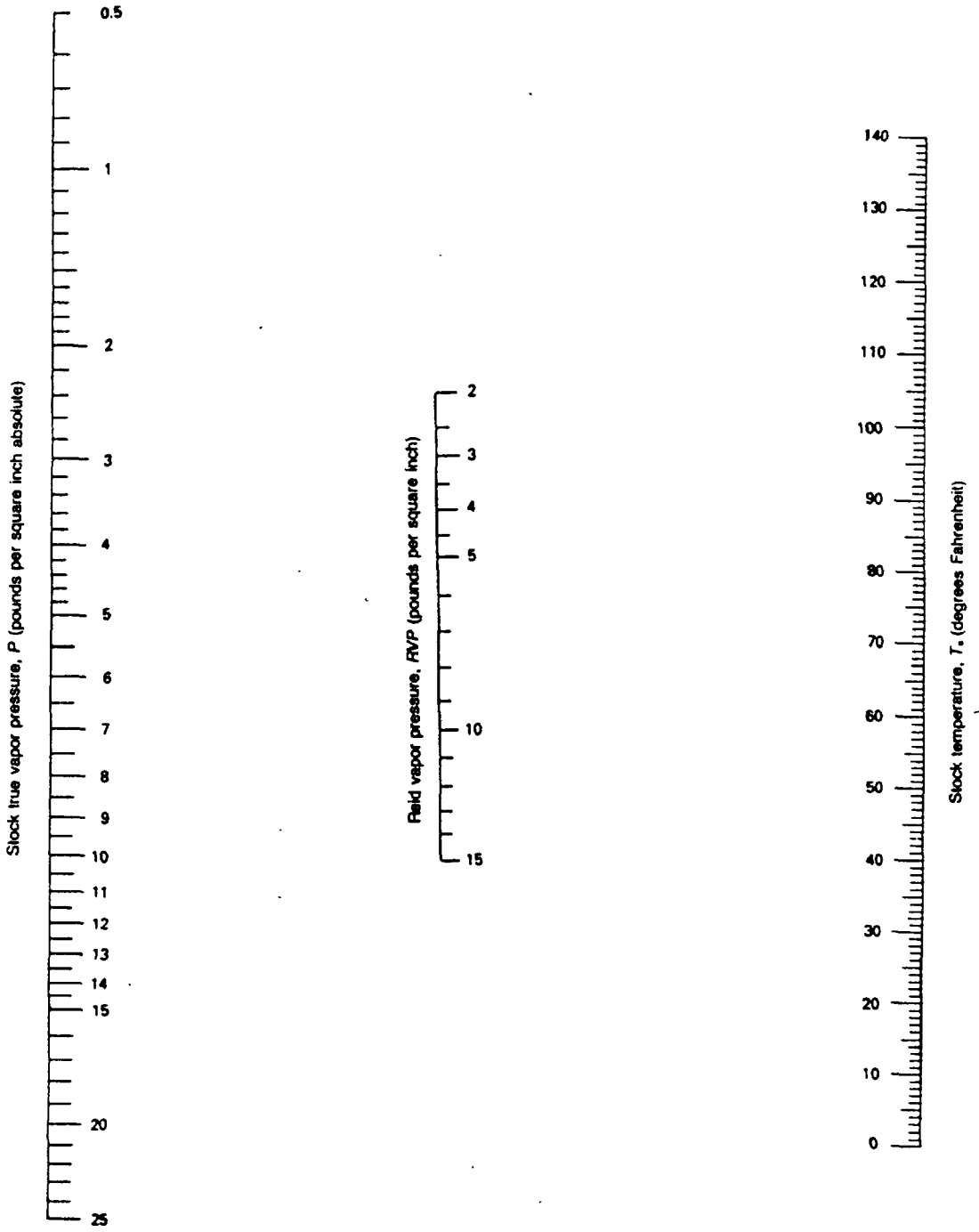

Figure 7.1-13a. True vapor pressure of crude oils with a Reid vapor pressure of 2 to 15 pounds per square inch.[4]

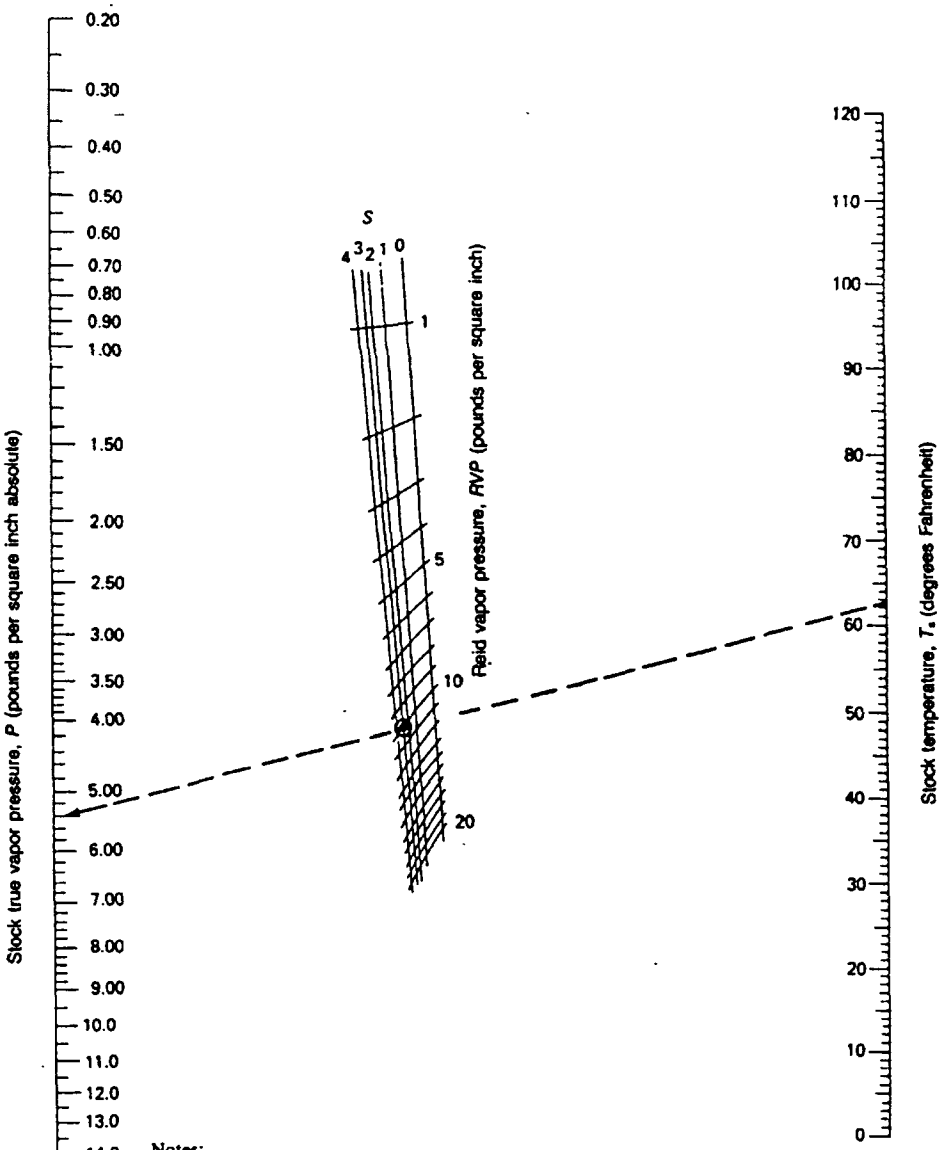

Notes:

1. S = slope of the ASTM distillation curve at 10 percent evaporated, in degrees Fahrenheit per percent
   = [(°F at 15 percent) − (°F at 5 percent)]/(10 percent).

In the absence of distillation data, the following average values of S may be used:

Motor gasoline—3.0.
Aviation gasoline—2.0.
Light naphtha (*RVP* of 9–14 pounds per square inch)—3.5.
Naphtha (*RVP* of 2–8 pounds per square inch)—2.5.

2. The broken line illustrates a sample problem for a gasoline stock (S = 3.0) with a Reid vapor pressure of 10 pounds per square inch and a stock temperature of 62.5°F.

Figure 7.1-14a. True vapor pressure of refined petroleum stocks with a Reid vapor pressure of 1 to 20 pounds per square inch.[4]

$$P = \exp\left\{\left[\left(\frac{2{,}799}{T + 459.6}\right) - 2.227\right]\log_{10}(RVP) - \left(\frac{7{,}261}{T + 459.6}\right) + 12.82\right\}$$

Where:

P = stock true vapor pressure, in pounds per square inch absolute.
T = stock temperature, in degrees Fahrenheit.
RVP = Reid vapor pressure, in pounds per square inch.

Note: This equation was derived from a regression analysis of points read off Figure 7.1-13a over the full range of Reid vapor pressures, slopes of the ASTM distillation curve at 10 percent evaporated, and stock temperatures. In general, the equation yields *P* values that are within +0.05 pound per square inch absolute of the values obtained directly from the nomograph.

Figure 7.1-13b. Equation for true vapor pressure of crude oils with a Reid vapor pressure of 2 to 15 pounds per square inch.[4]

$$P = \exp\left\{\left[0.7553 - \left(\frac{413.0}{T + 459.6}\right)\right]S^{0.5}\log_{10}(RVP) - \left[1.854 - \left(\frac{1{,}042}{T + 459.6}\right)\right]S^{0.5} + \left[\left(\frac{2{,}416}{T + 459.6}\right) - 2.013\right]\log_{10}(RVP) - \left(\frac{8{,}742}{T + 459.6}\right) + 15.64\right\}$$

Where:

P = stock true vapor pressure, in pounds per square inch absolute.
T = stock temperature, in degrees Fahrenheit.
RVP = Reid vapor pressure, in pounds per square inch.
S = slope of the ASTM distillation curve at 10 percent evaporated, in degrees Fahrenheit per percent.

Note: This equation was derived from a regression analysis of points read off Figure 7.1-14a over the full range of Reid vapor pressures, slopes of the ASTM distillation curve at 10 percent evaporated, and stock temperatures. In general, the equation yields *P* values that are within +0.05 pound per square inch absolute of the values obtained directly from the nomograph.

Figure 7.1-14b. Equation for true vapor pressure of refined petroleum stocks with a Reid vapor pressure of 1 to 20 pounds per square inch.[4]

$$A = 15.64 - 1.854\,S^{0.5} - (0.8742 - 0.3280\,S^{0.5})\ln(RVP)$$
$$B = 8{,}742 - 1{,}042\,S^{0.5} - (1{,}049 - 179.4\,S^{0.5})\ln(RVP)$$

where:

RVP = stock Reid vapor pressure, in pounds per square inch
ln = natural logarithm function
S = stock ASTM-D86 distillation slope at 10 volume percent evaporation (°F/vol %)

Figure 7.1-15. Equations to determine vapor pressure constants A and B for refined petroleum stocks.[8]

$$A = 12.82 - 0.9672 \ln (RVP)$$

$$B = 7{,}261 - 1{,}216 \ln (RVP)$$

where:

RVP = Reid vapor pressure, psi

ln = natural logarithm function

Figure 7.1-16. Equations to determine vapor pressure Constants A and B for crude oil stocks.[8]

Daily Maximum and Minimum Liquid Surface Temperature, (°R)

$$T_{LX} = T_{LA} + 0.25\ \Delta T_V$$

$$T_{LN} = T_{LA} - 0.25\ \Delta T_V$$

where:

T_{LX} = daily maximum liquid surface temperature, °R

T_{LA} is as defined in Note 3 to Equation 1-9

ΔT_V is as defined in Note 1 to Equation 1-16

T_{LN} = daily minimum liquid surface temperature, °R

Figure 7.1-17. Equations for the daily maximum and minimum liquid surface temperatures.[8]

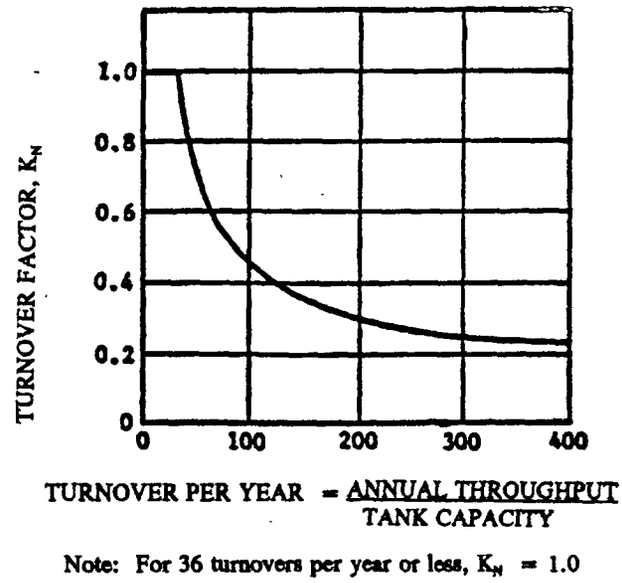

Figure 7.1-18. Turnover factor (K_N) for fixed roof tanks.[8]

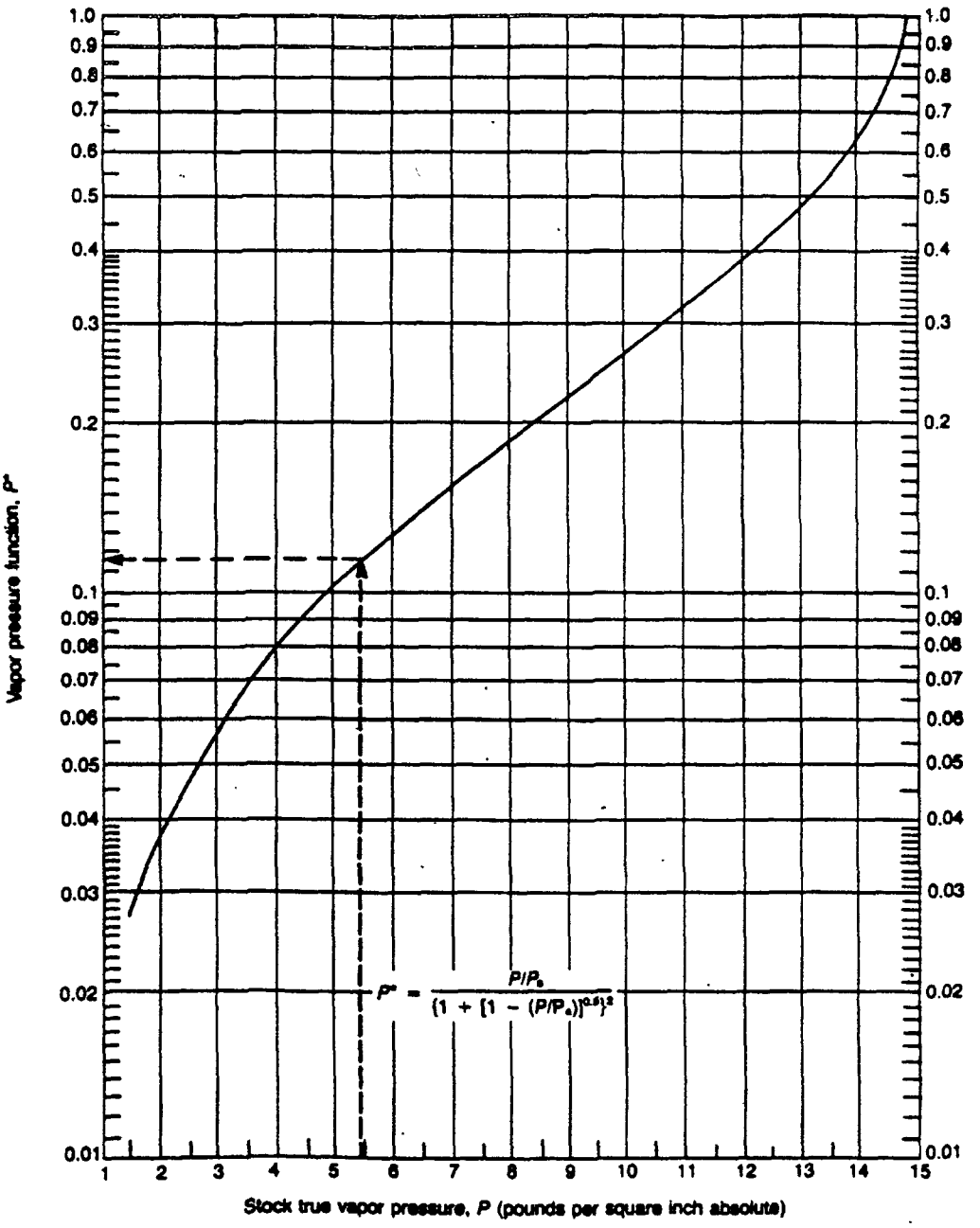

Notes:

1. Broken line illustrates sample problem for $P = 5.4$ pounds per square inch absolute.
2. Curve is for atmospheric pressure, P_a, equal to 14.7 pounds per square inch absolute.

Figure 7.1-19. Vapor pressure function.[4]

Table 7.1-1. LIST OF ABBREVIATIONS USED IN THE TANK EQUATIONS

Variable	Description	Variable	Description	Variable	Description
L_T	total losses, lb/yr	P	true vapor pressure of component i, psia	P_{BP}	breather vent pressure setting, psig
L_S	standing storage losses, lb/yr	A	constant in vapor pressure equation, dimensionless	P_{BV}	breather vent vacuum setting, psig
L_W	working losses, lb/yr	B	constant in vapor pressure equation, °R	Q	annual net throughput, bbl/yr
V_V	vapor space volume, ft^3	T_{AA}	daily average ambient temperature, °R	K_N	turnover factor, dimensionless
W_V	vapor density, lb/ft^3	T_B	liquid bulk temperature, °R	N	number of turnovers per year, dimensionless
K_E	vapor space expansion factor, dimensionless	α	tank paint solar absorptance, dimensionless	π	constant, (3.14159)
K_S	vented vapor saturation factor, dimensionless	I	daily total solar insolation factor, $Btu/ft^2 \cdot d$	V_{LX}	tank maximum liquid volume, ft^3
D	tank diameter, ft	T_{AX}	daily maximum ambient temperature, °R	H_{LX}	maximum liquid height, ft
H_{VO}	vapor space outage, ft	T_{AN}	daily minimum ambient temperature, °R	K_P	working loss product factor for fixed roof tanks, dimensionless
H_S	tank shell height, ft	D_E	effective tank diameter, ft	L_R	rim seal loss, lb/yr
H_L	liquid height, ft	L	length of tank, ft	L_{WD}	withdrawal loss, lb/yr
H_{RO}	roof outage, ft	ΔT_V	daily vapor temperature range, °R	L_F	deck fitting loss, lb/yr
H_R	tank roof height, ft	ΔP_V	daily vapor pressure range, psi	K_{Ra}	zero wind speed rim seal loss factor, lb-mole/ft·yr
S_R	tank cone roof slope, ft/ft	ΔP_B	breather vent pressure setting range, psig	K_{Rb}	wind speed dependent rim seal loss factor, lb-mole/ $(mph)^n ft \cdot yr$
R_S	tank shell radius, ft	P_A	atmospheric pressure, psi	v	average wind speed, mph
R_R	tank dome roof radius, ft	ΔT_A	daily ambient temperature range, °R	n	seal-related wind speed exponent, dimensionless
M_V	vapor molecular weight, lb/lb-mole	P_{VX}	vapor pressure at the daily maximum liquid surface temperature, psia	P*	vapor pressure function, dimensionless
R	ideal gas constant, (10.731 $psia \cdot ft^3/lb\text{-}mole \cdot °R$)	P_{VN}	vapor pressure at the daily minimum liquid surface temperature, psia	F_R	rim deck loss factor, lb-mole/ft·yr
P_{VA}	vapor pressure at daily average liquid surface temperature, psia			K_C	product factor for floating roof tanks, dimensionless
T_{LA}	daily average liquid surface temperature, °R			C	shell clingage factor, bbl/1,000 ft^2
M_i	molecular weight of component i, lb/lb-mole			W_L	average organic liquid density, lb/gal
y_i	vapor mole fraction of component i, lb-mole/lb-mole			F_F	total deck fitting loss factor, lb-mole/yr
x_i	liquid mole fraction of component i, lb-mole/lb-mole				

Table 7.1-1 (cont.).

Variable	Description	Variable	Description
N_{F_i}	number of deck fittings of a particular type, dimensionless	Z_{V_i}	vapor weight fraction of component i, lb/lb
N_c	number of columns	N_{TOTAL}	total number of moles in mixture, lb-mole
N_{vb}	number of vacuum breakers	W_i	liquid density of component i, lb/ft^3
N_d	number of drains	L_{T_i}	emission rate of component i, lb/yr
N_l	number of deck legs	L_V	variable vapor space filling loss, lb/1,000 gal throughput
n_f	total number of different types of fittings, dimensionless	V_1	volume of liquid pumped into system, bbl/yr
K_{F_i}	loss factor for a particular type of deck fitting, lb-mole/yr	V_2	volume expansion capacity, bbl
N_{Fa_i}	zero wind speed loss factor for a particular type of deck fitting, lb-mole/yr	N_2	number of transfers into system, dimensionless
N_{Fb_i}	wind speed dependent loss factor for a particular type of fitting, lb-mole/ $mph^m \cdot yr$		
K_v	fitting wind speed correction factor, dimensionless		
m_i	loss factor for a particular type of deck fitting, dimensionless		
i	1,2,.....n, dimensionless		
L_D	deck seam loss, lb/yr		
N_C	number of columns, dimensionless		
F_C	effective column diameter, ft		
K_D	deck seam loss per unit seam length factor, lb-mole/ft-yr		
S_D	deck seam length factor, ft/ft^2		
L_{seam}	total length of deck seam, ft		
A_{deck}	area of deck, ft^2		
P_i	partial pressure of component i, psia		
Z_{L_i}	liquid weight fraction of component i, lb/lb		
M_L	molecular weight of liquid mixture, lb/lb-mole		

Table 7.1-2. PROPERTIES (M_V, W_{VC}, P_{VA}, W_L) OF SELECTED PETROLEUM LIQUIDS[a]

Petroleum Liquid	Vapor Molecular Weight at 60°F, M_V (lb/lb-mole)	Condensed Vapor Density At 60°F, W_{VC} (lb/gal)	Liquid Density At 60°F, W_L (lb/gal)	True Vapor Pressure, P_{VA} (psi)						
				40°F	50°F	60°F	70°F	80°F	90°F	100°F
Gasoline RVP 13	62	4.9	5.6	4.7	5.7	6.9	8.3	9.9	11.7	13.8
Gasoline RVP 10	66	5.1	5.6	3.4	4.2	5.2	6.2	7.4	8.8	10.5
Gasoline RVP 7	68	5.2	5.6	2.3	2.9	3.5	4.3	5.2	6.2	7.4
Crude oil RVP 5	50	4.5	7.1	1.8	2.3	2.8	3.4	4.0	4.8	5.7
Jet naphtha (JP-4)	80	5.4	6.4	0.8	1.0	1.3	1.6	1.9	2.4	2.7
Jet kerosene	130	6.1	7.0	0.0041	0.0060	0.0085	0.011	0.015	0.021	0.029
Distillate fuel oil No. 2	130	6.1	7.1	0.0031	0.0045	0.0074	0.0090	0.012	0.016	0.022
Residual oil No. 6	190	6.4	7.9	0.00002	0.00003	0.00004	0.00006	0.00009	0.00013	0.00019

[a] References 10 and 11.

Table 7.1-3. PHYSICAL PROPERTIES OF SELECTED PETROCHEMICALS[a]

Name	Formula	Molecular Weight	Boiling Point At 1 Atmosphere (°F)	Liquid Density At 60°F (lb/gal)	Vapor Pressure (psia) At						
					40°F	50°F	60°F	70°F	80°F	90°F	100°F
Acetone	CH_3COCH_3	58.08	133.0	6.628	1.682	2.185	2.862	3.713	4.699	5.917	7.251
Acetonitrile	CH_3CN	41.05	178.9	6.558	0.638	0.831	1.083	1.412	1.876	2.456	3.133
Acrylonitrile	CH_2:CHCN	53.06	173.5	6.758	0.812	0.967	1.373	1.779	2.378	3.133	4.022
Allyl alcohol	CH_2:$CHCH_2OH$	58.08	206.6	7.125	0.135	0.193	0.261	0.387	0.522	0.716	1.006
Allyl chloride	CH_2:$CHCH_2Cl$	76.53	113.2	7.864	2.998	3.772	4.797	6.015	7.447	9.110	11.025
Ammonium hydroxide (28.8% solution)	NH_4OH--H_2O	35.05	83.0	7.481	5.130	6.630	8.480	10.760	13.520	16.760	20.680
Benzene	C_6H_6	78.11	176.2	7.365	0.638	0.870	1.160	1.508	1.972	2.610	3.287
iso-Butyl alcohol	$(CH_3)_2CHCH_2OH$	74.12	227.1	6.712	0.058	0.097	0.135	0.193	0.271	0.387	0.541
tert-Butyl alcohol	$(CH_3)_3COH$	74.12	180.5	6.595	0.174	0.290	0.425	0.638	0.909	1.238	1.702
n-Butyl chloride	$CH_3CH_2CH_2CH_2Cl$	92.57	172.0	7.430	0.715	1.006	1.320	1.740	2.185	2.684	3.481
Carbon disulfide	CS_2	76.13	115.3	10.588	3.036	3.867	4.834	6.014	7.387	9.185	11.215
Carbon tetrachloride	CCl_4	153.84	170.2	13.366	0.793	1.064	1.412	1.798	2.301	2.997	3.771
Chloroform	$CHCl_3$	119.39	142.7	12.488	1.528	1.934	2.475	3.191	4.061	5.163	6.342
Chloroprene	CH_2:CCl·CH:CH_2	88.54	138.9	8.046	1.760	2.320	2.901	3.655	4.563	5.685	6.981
Cyclohexane	C_6H_{12}	84.16	177.3	6.522	0.677	0.928	1.218	1.605	2.069	2.610	3.249
Cyclopentane	C_5H_{10}	70.13	120.7	6.248	2.514	3.287	4.177	5.240	6.517	8.063	9.668
1,1-Dichloroethane	CH_3CHCl_2	98.97	135.1	9.861	1.682	2.243	2.901	3.771	4.738	5.840	7.193
1,2-Dichloroethane	CH_2ClCH_2Cl	98.97	182.5	10.500	0.561	0.773	1.025	1.431	1.740	2.243	2.804
cis-1,2- Dichloro-ethylene	CHCl:CHCl	96.95	140.2	10.763	1.450	2.011	2.668	3.461	4.409	5.646	6.807
trans-1,2-Dichloro-ethylene	CHCl:CHCl	96.95	119.1	10.524	2.552	3.384	4.351	5.530	6.807	8.315	10.016
Diethylamine	$(C_2H_5)_2NH$	73.14	131.9	5.906	1.644	1.992	2.862	3.867	4.892	6.130	7.541
Diethyl ether	$C_2H_5OC_2H_5$	74.12	94.3	5.988	4.215	5.666	7.019	8.702	10.442	13.342	Boils
Di-*iso*-propyl ether	$(CH_3)_2CHOCH(CH_3)_2$	102.17	153.5	6.075	1.199	1.586	2.127	2.746	3.481	4.254	5.298
1,4-Dioxane	O·$CH_2CH_2OCH_2CH_2$	88.10	214.7	8.659	0.232	0.329	0.425	0.619	0.831	1.141	1.508
Dipropyl ether	$CH_3CH_2CH_2OCH_2CH_2CH_3$	102.17	195.8	6.260	0.425	0.619	0.831	1.102	1.431	1.876	2.320
Ethyl acetate	$C_2H_5OOCCH_3$	88.10	170.9	7.551	0.580	0.831	1.102	1.489	1.934	2.514	3.191
Ethyl acrylate	C_2H_5OOCCH:CH_2	100.11	211.8	7.750	0.213	0.290	0.425	0.599	0.831	1.122	1.470
Ethyl alcohol	C_2H_5OH	46.07	173.1	6.610	0.193	0.406	0.619	0.870	1.218	1.682	2.320

Table 7.1-3 (cont.).

Name	Formula	Molecular Weight	Boiling Point At 1 Atmosphere (°F)	Liquid Density At 60°F (Pounds Per Gallon)	Vapor Pressure (Pounds Per Square Inch Absolute) At						
					40°F	50°F	60°F	70°F	80°F	90°F	100°F
Freon 11	CCl_3F	137.38	75.4	12.480	7.032	8.804	10.900	13.40	16.31	19.69	23.60
n-Heptane	$CH_3(CH_2)_5CH_3$	100.20	209.2	5.727	0.290	0.406	0.541	0.735	0.967	1.238	1.586
n-Hexane	$CH_3(CH_2)_4CH_3$	86.17	155.7	5.527	1.102	1.450	1.876	2.436	3.055	3.906	4.892
Hydrogen cyanide	HCN	27.03	78.3	5.772	6.284	7.831	9.514	11.853	15.392	18.563	22.237
Isooctane	$(CH_3)_3CCH_2CH(CH_3)_2$	114.22	210.6	5.794	0.213	0.387	0.580	0.812	1.093	1.392	1.740
Isopentane	$(CH_3)_2CHCH_2CH_3$	72.15	82.1	5.199	5.878	7.889	10.005	12.530	15.334	18.370	21.657
Isoprene	$(CH_2):C(CH_3)CH:CH_2$	68.11	93.5	5.707	4.757	6.130	7.677	9.668	11.699	14.503	17.113
Isopropyl alcohol	$(CH_3)_2{\cdot}CHOH$	60.09	180.1	6.573	0.213	0.329	0.483	0.677	0.928	1.296	1.779
Methacrylonitrile	$CH_2:CH(CH_3)CN$	67.09	194.5	6.738	0.483	0.657	0.870	1.160	1.470	1.934	2.456
Methyl acetate	CH_3OOCCH_3	74.08	134.8	7.831	1.489	2.011	2.746	3.693	4.699	5.762	6.961
Methyl acrylate	$CH_3OOCCH:CH_2$	86.09	176.9	7.996	0.599	0.773	1.025	1.354	1.798	2.398	3.055
Methyl alcohol	CH_3OH	32.04	148.4	6.630	0.735	1.006	1.412	1.953	2.610	3.461	4.525
Methylcyclohexane	$CH_3{\cdot}C_6H_{11}$	98.18	213.7	6.441	0.309	0.425	0.541	0.735	0.986	1.315	1.721
Methylcyclopentane	$CH_3C_5H_9$	84.16	161.3	6.274	0.909	1.160	1.644	2.224	2.862	3.616	4.544
Methylene chloride	CH_2Cl_2	84.94	104.2	11.122	3.094	4.254	5.434	6.787	8.702	10.329	13.342
Methyl ethyl ketone	$CH_3COC_2H_5$	72.10	175.3	6.747	0.715	0.928	1.199	1.489	2.069	2.668	3.345
Methyl methacrylate	$CH_3OOC(CH_3):CH_2$	100.11	212.0	7.909	0.116	0.213	0.348	0.541	0.773	1.064	1.373
Methyl propyl ether	$CH_3OC_3H_7$	74.12	102.1	6.166	3.674	4.738	6.091	7.058	9.417	11.602	13.729
Nitromethane	CH_3NO_2	61.04	214.2	9.538	0.213	0.251	0.348	0.503	0.715	1.006	1.334
n-Pentane	$CH_3(CH_2)_3CH_3$	72.15	96.9	5.253	4.293	5.454	6.828	8.433	10.445	12.959	15.474
n-Propylamine	$C_3H_7NH_2$	59.11	119.7	6.030	2.456	3.191	4.157	5.250	6.536	8.044	9.572
1,1,1-Trichloroethane	CH_3CCl_3	133.42	165.2	11.216	0.909	1.218	1.586	2.030	2.610	3.307	4.199
Trichloroethylene	$CHCl:CCl_2$	131.40	188.6	12.272	0.503	0.677	0.889	1.180	1.508	2.030	2.610
Toluene	$CH_3{\cdot}C_6H_5$	92.13	231.1	7.261	0.174	0.213	0.309	0.425	0.580	0.773	1.006
Vinyl acetate	$CH_2:CHOOCCH_3$	86.09	162.5	7.817	0.735	0.986	1.296	1.721	2.262	3.113	4.022
Vinylidene chloride	$CH_2:CCl_2$	96.5	89.1	10.383	4.990	6.344	7.930	9.806	11.799	15.280	23.210

[a] Reference 11.

Table 7.1-4. ASTM DISTILLATION SLOPE FOR SELECTED REFINED PETROLEUM STOCKS[a]

Refined Petroleum Stock	Reid Vapor Pressure, RVP (psi)	ASTM-D86 Distillation Slope At 10 Volume Percent Evaporated, (°F/vol%)
Aviation gasoline	ND	2.0
Naphtha	2-8	2.5
Motor gasoline	ND	3.0
Light naphtha	9-14	3.5

[a] Reference 8. ND = no data.

Table 7.1-5. VAPOR PRESSURE EQUATION CONSTANTS FOR ORGANIC LIQUIDS[a]

Name	Vapor Pressure Equation Constants		
	A	B	C
	(Dimensionless)	(°C)	(°C)
Acetaldehyde	8.005	1600.017	291.809
Acetic acid	7.387	1533.313	222.309
Acetic anhydride	7.149	1444.718	199.817
Acetone	7.117	1210.595	229.664
Acetonitrile	7.119	1314.4	230
Acrylamide	11.2932	3939.877	273.16
Acrylic acid	5.652	648.629	154.683
Acrylonitrile	7.038	1232.53	222.47
Aniline	7.32	1731.515	206.049
Benzene	6.905	1211.033	220.79
Butanol (iso)	7.4743	1314.19	186.55
Butanol-(1)	7.4768	1362.39	178.77
Carbon disulfide	6.942	1169.11	241.59
Carbon tetrachloride	6.934	1242.43	230
Chlorobenzene	6.978	1431.05	217.55
Chloroform	6.493	929.44	196.03
Chloroprene	6.161	783.45	179.7
Cresol(-M)	7.508	1856.36	199.07
Cresol(-O)	6.911	1435.5	165.16
Cresol(-P)	7.035	1511.08	161.85
Cumene (isopropylbenzene)	6.963	1460.793	207.78
Cyclohexane	6.841	1201.53	222.65
Cyclohexanol	6.255	912.87	109.13
Cyclohexanone	7.8492	2137.192	273.16
Dichloroethane(1,2)	7.025	1272.3	222.9
Dichloroethylene(1,2)	6.965	1141.9	231.9
Diethyl (N,N) anilin	7.466	1993.57	218.5
Dimethyl formamide	6.928	1400.87	196.43
Dimethyl hydrazine (1,1)	7.408	1305.91	225.53
Dimethyl phthalate	4.522	700.31	51.42
Dinitrobenzene	4.337	229.2	-137
Dioxane(1,4)	7.431	1554.68	240.34
Epichlorohydrin	8.2294	2086.816	273.16
Ethanol	8.321	1718.21	237.52
Ethanolamine(mono-)	7.456	1577.67	173.37
Ethyl acetate	7.101	1244.95	217.88
Ethyl acrylate	7.9645	1897.011	273.16
Ethyl benzene	6.975	1424.255	213.21
Ethyl chloride	6.986	1030.01	238.61
Ethyl ether	6.92	1064.07	228.8
Formic acid	7.581	1699.2	260.7
Furan	6.975	1060.87	227.74
Furfural	6.575	1198.7	162.8
Heptane(iso)	6.8994	1331.53	212.41
Hexane(-N)	6.876	1171.17	224.41

Table 7.1-5 (cont.).

Name	Vapor Pressure Equation Constants		
	A	B	C
	(Dimensionless)	(°C)	(°C)
Hexanol(-1)	7.86	1761.26	196.66
Hydrocyanic acid	7.528	1329.5	260.4
Methanol	7.897	1474.08	229.13
Methyl acetate	7.065	1157.63	219.73
Methyl ethyl ketone	6.9742	1209.6	216
Methyl isobutyl ketone	6.672	1168.4	191.9
Methyl methacrylate	8.409	2050.5	274.4
Methyl styrene (alpha)	6.923	1486.88	202.4
Methylene chloride	7.409	1325.9	252.6
Morpholine	7.7181	1745.8	235
Naphthalene	7.01	1733.71	201.86
Nitrobenzene	7.115	1746.6	201.8
Pentachloroethane	6.74	1378	197
Phenol	7.133	1516.79	174.95
Picoline(-2)	7.032	1415.73	211.63
Propanol (iso)	8.117	1580.92	219.61
Propylene glycol	8.2082	2085.9	203.540
Propylene oxide	8.2768	1656.884	273.16
Pyridine	7.041	1373.8	214.98
Resorcinol	6.9243	1884.547	186.060
Styrene	7.14	1574.51	224.09
Tetrachloroethane(1,1,1,2)	6.898	1365.88	209.74
Tetrachloroethane(1,1,2,2)	6.631	1228.1	179.9
Tetrachloroethylene	6.98	1386.92	217.53
Tetrahydrofuran	6.995	1202.29	226.25
Toluene	6.954	1344.8	219.48
Trichloro(1,1,2)trifluoroethane	6.88	1099.9	227.5
Trichloroethane(1,1,1)	8.643	2136.6	302.8
Trichloroethane(1,1,2)	6.951	1314.41	209.2
Trichloroethylene	6.518	1018.6	192.7
Trichlorofluoromethane	6.884	1043.004	236.88
Trichloropropane(1,2,3)	6.903	788.2	243.23
Vinyl acetate	7.21	1296.13	226.66
Vinylidene chloride	6.972	1099.4	237.2
Xylene(-M)	7.009	1426.266	215.11
Xylene(-O)	6.998	1474.679	213.69

[a]Reference 12.

Table 7.1-6. PAINT SOLAR ABSORPTANCE FOR FIXED ROOF TANKS[a]

Paint Color	Paint Shade Or Type	Paint Factors (α)	
		Paint Condition	
		Good	Poor
Aluminum	Specular	0.39	0.49
Aluminum	Diffuse	0.60	0.68
Gray	Light	0.54	0.63
Gray	Medium	0.68	0.74
Red	Primer	0.89	0.91
White	NA	0.17	0.34

[a] Reference 8. If specific information is not available, a white shell and roof, with the paint in good condition, can be assumed to represent the most common or typical tank paint in use. If the tank roof and shell are painted a different color, α is determined from $\alpha = (\alpha_R + \alpha_S)/2$; where α_R is the tank roof paint solar absorptance and α_S is the tank shell paint solar absorptance. NA = not applicable.

Table 7.1-7. METEOROLOGICAL DATA (T_{AX}, T_{AN}, I) FOR SELECTED U.S. LOCATIONS[a]

Location	Property		Monthly Averages												Annual Average
	Symbol	Units	Jan.	Feb.	Mar.	Apr.	May	June	July	Aug.	Sept.	Oct.	Nov.	Dec.	
Birmingham, AL	T_{AX}	°F	52.7	57.3	65.2	75.2	81.6	87.9	90.3	89.7	84.6	74.8	63.7	55.9	73.2
	T_{AN}	°F	33.0	35.2	42.1	50.4	58.3	65.9	69.8	69.1	63.6	50.4	40.5	35.2	51.1
	I	Btu/ft^2·d	707	967	1296	1674	1857	1919	1810	1724	1455	1211	858	661	1345
Montgomery, AL	T_{AX}	°F	57.0	60.9	68.1	77 0	83.6	89.8	91.5	91.2	86.9	77.5	67.0	59.8	75.9
	T_{AN}	°F	36.4	38.8	45.5	53.3	61.1	68.4	71.8	71.1	66.4	53.1	43.0	37.9	53.9
	I	Btu/ft^2·d	752	1013	1341	1729	1897	1972	1841	1746	1468	1262	915	719	1388
Homer, AK	T_{AX}	°F	27.0	31.2	34.4	42.1	49.8	56.3	60.5	60.3	54.8	44.0	34.9	27.7	43.6
	T_{AN}	°F	14.4	17.4	19.3	28.1	34.6	41.2	45.1	45.2	39.7	30.6	22.8	15.8	29.5
	I	Btu/ft^2·d	122	334	759	1248	1583	1751	1598	1189	791	437	175	64	838
Phoenix, AZ	T_{AX}	°F	65.2	69.7	74.5	83.1	92.4	102.3	105.0	102.3	98.2	87.7	74.3	66.4	85.1
	T_{AN}	°F	39.4	42.5	46.7	53.0	61.5	70.6	79.5	77.5	70.9	59.1	46.9	40,2	57.3
	I	Btu/ft^2·d	1021	1374	1814	2355	2677	2739	2487	2293	2015	1577	1151	932	1869
Tucson, AZ	T_{AX}	°F	64.1	67.4	71.8	80.1	88.8	98.5	98.5	95.9	93.5	84.1	72.2	65.0	81.7
	T_{AN}	°F	38.1	40.0	43.8	49.7	57.5	67.4	73.8	72.0	67.3	56.7	45.2	39.0	54.2
	I	Btu/ft^2·d	1099	1432	1864	2363	2671	2730	2341	2183	1979	1602	1208	996	1872
Fort Smith, AR	T_{AX}	°F	48.4	53.8	62.5	73.7	81.0	88.5	93.6	92.9	85.7	75.9	61.9	52.1	72.5
	T_{AN}	°F	26.6	30.9	38.5	49.1	58.2	66.3	70.5	68.9	62.1	49.0	37.7	30.2	49.0
	I	Btu/ft^2·d	744	999	1312	1616	1912	2089	2065	1877	1502	1201	851	682	1404
Little Rock, AR	T_{AX}	°F	49.8	54.5	63.2	73.8	81.7	89.5	92.7	92.3	85.6	75.8	62.4	53.2	72.9
	T_{AN}	°F	29.9	33.6	41.2	50.9	59.2	67.5	71.4	69.6	63.0	50.4	40.0	33.2	50.8
	I	Btu/ft^2·d	731	1003	1313	1611	1929	2107	2032	1861	1518	1228	847	674	1404
Bakersfield, CA	T_{AX}	°F	57.4	63.7	68.6	75.1	83.9	92.2	98.8	96.4	90.8	81.0	67.4	57.6	77.7
	T_{AN}	°F	38.9	42.6	45.5	50.1	57.2	64.3	70.1	68.5	63.8	54.9	44.9	38.7	53.3
	I	Btu/ft^2·d	766	1102	1595	2095	2509	2749	2684	2421	1992	1458	942	677	1749
Long Beach, CA	T_{AX}	°F	66.0	67.3	68.0	70.9	73.4	77.4	83.0	83.8	82.5	78.4	72.7	67.4	74.2
	T_{AN}	°F	44.3	45.9	47.7	50.8	55.2	58.9	62.6	64.0	61.6	56.6	49.6	44.7	53.5
	I	Btu/ft^2·d	928	1215	1610	1938	2065	2140	2300	2100	1701	1326	1004	847	1598
Los Angeles AP, CA	T_{AX}	°F	64.6	65.5	65.1	66.7	69.1	72.0	75.3	76.5	76.4	74.0	70.3	66.1	70.1
	T_{AN}	°F	47.3	48.6	49.7	52.2	55.7	59.1	62.6	64.0	62.5	58.5	52.1	47.8	55.0
	I	Btu/ft^2·d	926	1214	1619	1951	2060	2119	2308	2080	1681	1317	1004	849	1594
Sacramento, CA	T_{AX}	°F	52.6	59.4	64.1	71.0	79.7	87.4	93.3	91.7	87.6	77.7	63.2	53.2	73.4
	T_{AN}	°F	37.9	41.2	42.4	45.3	50.1	55.1	57.9	57.6	55.8	50.0	42.8	37.9	47.8
	I	Btu/ft^2·d	597	939	1458	2004	2435	2684	2688	2368	1907	1315	782	538	1643
San Francisco AP, CA	T_{AX}	°F	55.5	59.0	60.6	63.0	66.3	69.6	71.0	71.8	73.4	70.0	62.7	56.3	64.9
	T_{AN}	°F	41.5	44.1	44.9	46.6	49.3	52.0	53.3	54.2	54.3	51.2	46.3	42.2	48.3
	I	Btu/ft^2·d	708	1009	1455	1920	2226	2377	2392	2117	1742	1226	821	642	1608

Table 7.1-7 (cont.).

Location	Property		Monthly Averages												Annual Average
	Symbol	Units	Jan.	Feb.	Mar.	Apr.	May	June	July	Aug.	Sept.	Oct.	Nov.	Dec.	
Santa Maria, CA	T_{AX}	°F	62.8	64.2	63.9	65.6	67.3	69.9	72.1	72.8	74.2	73.3	68.9	64 6	68.3
	T_{AN}	°F	38.8	40.3	40.9	42.7	46.2	49.6	52.4	53.2	51.8	47.6	42.1	38.3	45.3
	I	Btu/ft^2·d	854	1141	1582	1921	2141	2349	2341	2106	1730	1353	974	804	1608
Denver, CO	T_{AX}	°F	43.1	46.9	51.2	61.0	70.7	81.6	88.0	85.8	77.5	66.8	52.4	46.1	64.3
	T_{AN}	°F	15.9	20.2	24.7	33.7	43.6	52.4	58.7	57.0	47.7	36.9	25.1	18.9	36.2
	I	Btu/ft^2·d	840	1127	1530	1879	2135	2351	2273	2044	1727	1301	884	732	1568
Grand Junction, CO	T_{AX}	°F	35.7	44.5	54.1	65.2	76.2	87.9	94.0	90.3	81.9	68.7	51.0	38.7	65.7
	T_{AN}	°F	15.2	22.4	29.7	38.2	48.0	56.6	63.8	61.5	52.2	41.1	28.2	17.9	39.6
	I	Btu/ft^2·d	791	1119	1554	1986	2380	2599	2465	2182	1834	1345	918	731	1659
Wilmington, DE	T_{AX}	°F	39.2	41.8	50.9	63.0	72.7	81.2	85.6	84.1	77.8	66.7	54.8	43.6	63.5
	T_{AN}	°F	23.2	24.6	32.6	41.8	51.7	61.2	66.3	65.4	58.0	45.9	36.4	27.3	44.5
	I	Btu/ft^2·d	571	827	1149	1480	1710	1883	1823	1615	1318	984	645	489	1208
Atlanta, GA	T_{AX}	°F	51.2	55.3	63.2	73.2	79.8	85.6	87.9	87.6	82.3	72.9	62.6	54.1	71.3
	T_{AN}	°F	32.6	34.5	41.7	50.4	58.7	65.9	69.2	68.7	63.6	51.4	41.3	34.8	51.1
	I	Btu/ft^2·d	718	969	1304	1686	1854	1914	1812	1709	1422	1200	883	674	1345
Savannah, GA	T_{AX}	°F	60.3	63.1	69.9	77.8	84.2	88.6	90.8	90.1	85.6	77.8	69.5	62.5	76.7
	T_{AN}	°F	37.9	40.0	46.8	54.1	62.3	68.5	71.5	71.4	67.6	55.9	45.5	39.4	55.1
	I	Btu/ft^2·d	795	1044	1399	1761	1852	1844	1784	1621	1364	1217	941	754	1365
Honolulu, HI	T_{AX}	°F	79.9	80.4	81.4	82.7	84.8	86.2	87.1	88.3	88.2	86.7	83.9	81.4	84.2
	T_{AN}	°F	65.3	65.3	67.3	68.7	70.2	71.9	73.1	73.6	72.9	72.2	69.2	66.5	69.7
	I	Btu/ft^2·d	1180	1396	1622	1796	1949	2004	2002	1967	1810	1540	1266	1133	1639
Chicago, IL	T_{AX}	°F	29.2	33 9	44.3	58.8	70 0	79.4	83 3	82.1	75.5	64.1	48.2	35.0	58.7
	T_{AN}	°F	13.6	18.1	27.6	38.8	48.1	57.7	62 7	61.7	53.9	42.9	31.4	20.3	39.7
	I	Btu/ft^2·d	507	760	1107	1459	1789	2007	1944	1719	1354	969	566	402	1215
Springfield, IL	T_{AX}	°F	32.8	38.0	48.9	64.0	74.6	84.1	87.1	84.7	79.3	67.5	51.2	38.4	62.6
	T_{AN}	°F	16.3	20.9	30.3	42.6	52.5	62.0	65.9	63.7	55.8	44.4	32.9	23.0	42.5
	I	Btu/ft^2·d	585	861	1143	1515	1866	2097	2058	1806	1454	1068	677	490	1302
Indianapolis, IN	T_{AX}	°F	34.2	38.5	49.3	63.1	73.4	82.3	85.2	83.7	77.9	66.1	50.8	39.2	62.0
	T_{AN}	°F	17.8	21.1	30.7	41.7	51.5	60.9	64.9	62.7	55.3	43.4	32.8	23.7	42.2
	I	Btu/ft^2·d	496	747	1037	1398	1638	1868	1806	1644	1324	977	579	417	1165
Wichita, KS	T_{AX}	°F	39.8	46.1	55.8	68.1	77.1	87 4	92.9	91.5	82.0	71.2	55.1	44.6	67 6
	T_{AN}	°F	19.4	24.1	32.4	44.5	54.6	64.7	69 8	67.9	59.2	46.9	33.5	24.2	45.1
	I	Btu/ft^2·d	784	1058	1406	1783	2036	2264	2239	2032	1616	1250	871	690	1502

Table 7.1-7 (cont.).

Location	Property		Monthly Averages												Annual
	Symbol	Units	Jan.	Feb.	Mar.	Apr.	May	June	July	Aug.	Sept.	Oct.	Nov.	Dec.	Average
Louisville, KY	T_{AX}	°F	40.8	45.0	54.9	67.5	76.2	84.0	87.6	86.7	80.6	69.2	55.5	45.4	66.1
	T_{AN}	°F	24.1	26.8	35.2	45.6	54.6	63.3	67.5	66.1	59.1	46.2	36.6	28.9	46.2
	I	Btu/ft^2·d	546	789	1102	1467	1720	1904	1838	1680	1361	1042	653	488	1216
Baton Rouge, LA	T_{AX}	°F	61.1	64.5	71.6	79.2	85.2	90.6	91.4	90.8	87.4	80.1	70.1	63.8	78.0
	T_{AN}	°F	40.5	42.7	49.4	57.5	64.3	70.0	72.8	72.0	68.3	56.3	47.2	42.3	57.0
	I	Btu/ft^2·d	785	1054	1379	1681	1871	1926	1746	1677	1464	1301	920	737	1379
Lake Charles, LA	T_{AX}	°F	60.8	64.0	70.5	77.8	84.1	89.4	91.0	90.8	87.5	80.8	70.5	64.0	77.6
	T_{AN}	°F	42.2	44.5	50.8	58.9	65.6	71.4	73.5	72.8	68.9	57.7	48.9	43.8	58.3
	I	Btu/ft^2·d	728	1010	1313	1570	1849	1970	1788	1657	1485	1381	917	706	1365
New Orleans, LA	T_{AX}	°F	61.8	64.6	71.2	78.6	84.5	89.5	90.7	90.2	86.8	79.4	70.1	64.4	77.7
	T_{AN}	°F	43.0	44.8	51.6	58.8	65.3	70.9	73.5	73.1	70.1	59.0	49.9	44.8	58.7
	I	Btu/ft^2·d	835	1112	1415	1780	1968	2004	1814	1717	1514	1335	973	779	1437
Detroit, MI	T_{AX}	°F	30.6	33.5	43.4	57.7	69.4	79.0	83.1	81.5	74.4	62.5	47.6	35.4	58.2
	T_{AN}	°F	16.1	18.0	26.5	36.9	46.7	56.3	60.7	59.4	52.2	41.2	31.4	21.6	38.9
	I	Btu/ft^2·d	417	680	1000	1399	1716	1866	1835	1576	1253	876	478	344	1120
Grand Rapids, MI	T_{AX}	°F	29.0	31.7	41.6	56.9	69.4	78.9	83.0	81.1	73.4	61.4	46.0	33.8	57.2
	T_{AN}	°F	14.9	15.6	24.5	35.6	45.5	55.3	59.8	58.1	50.8	40.4	30.9	20.7	37.7
	I	Btu/ft^2·d	370	648	1014	1412	1755	1957	1914	1676	1262	858	446	311	1135
Minneapolis-St. Paul, MN	T_{AX}	°F	19.9	26.4	37.5	56.0	69 4	78.5	83.4	80.9	71.0	59.7	41.1	26.7	54.2
	T_{AN}	°F	2.4	8.5	20.8	36.0	47.6	57.7	62.7	60.3	50.2	39.4	25.3	11.7	35.2
	I	Btu/ft^2·d	464	764	1104	1442	1737	1928	1970	1687	1255	860	480	353	1170
Jackson, MS	T_{AX}	°F	56.5	60.9	68.4	77.3	84.1	90.5	92.5	92.1	87.6	78.6	67.5	60.0	76.3
	T_{AN}	°F	34.9	37.2	44.2	52.9	60.8	67.9	71.3	70.2	65.1	51.4	42.3	37.1	52.9
	I	Btu/ft^2·d	754	1026	1369	1708	1941	2024	1909	1781	1509	1271	902	709	1409
Billings, MT	T_{AX}	°F	29.9	37.9	44.0	55.9	66.4	76.3	86.6	84.3	72.3	61.0	44.4	36.0	57.9
	T_{AN}	°F	11.8	18.8	23.6	33.2	43.3	51.6	58.0	56.2	46.5	37.5	25.5	18.2	35.4
	I	Btu/ft^2·d	486	763	1190	1526	1913	2174	2384	2022	1470	987	561	421	1325
Las Vegas, NV	T_{AX}	°F	56.0	62.4	68.3	77.2	87.4	98.6	104.5	101.9	94.7	81.5	66.0	57.1	79.6
	T_{AN}	°F	33.0	37.7	42.3	49.8	59.0	68.6	75.9	73.9	65.6	53.5	41.2	33.6	52.8
	I	Btu/ft^2·d	978	1340	1824	2319	2646	2778	2588	2355	2037	1540	1086	881	1864
Newark, NJ	T_{AX}	°F	38.2	40.3	49.1	61.3	71.6	80.6	85.6	84.0	76.9	66.0	54.0	42.3	62.5
	T_{AN}	°F	24.2	25.3	33.3	42.9	53.0	62.4	67.9	67.0	59.4	48.3	39.0	28.6	45.9
	I	Btu/ft^2·d	552	793	1109	1449	1687	1795	1760	1565	1273	951	596	454	1165

Table 7.1-7 (cont.).

Location	Property		Monthly Averages												Annual Average
	Symbol	Units	Jan.	Feb.	Mar.	Apr.	May	June	July	Aug.	Sept.	Oct.	Nov.	Dec.	
Roswell, NM	T_{AX}	°F	55.4	60.4	67.7	76.9	85.0	93.1	93.7	91.3	84.9	75.8	63.1	56.7	75.3
	T_{AN}	°F	27.4	31.4	37.9	46.8	55.6	64.8	69 0	67.0	59.6	47.5	35.0	28.2	47.5
	I	Btu/ft^2·d	1047	1373	1807	2218	2459	2610	2441	2242	1913	1527	1131	952	1810
Buffalo, NY	T_{AX}	°F	30.0	31.4	40.4	54.4	65.9	75.6	80.2	78.2	71.4	60.2	47.0	35.0	55.8
	T_{AN}	°F	17.0	17.5	25.6	36.3	46.3	56.4	61.2	59.6	52.7	42.7	33.6	22.5	39.3
	I	Btu/ft^2·d	349	546	889	1315	1597	1804	1776	1513	1152	784	403	283	1034
New York, NY (LaGuardia Airport)	T_{AX}	°F	37.4	39.2	47.3	59.6	69.7	78.7	83.9	82.3	75.2	64.5	52.9	41.5	61.0
	T_{AN}	°F	26.1	27.3	34.6	44.2	53.7	63.2	68.9	68.2	61.2	50.5	41.2	30.8	47.5
	I	Btu/ft^2·d	548	795	1118	1457	1690	1802	1784	1583	1280	951	593	457	1171
Cleveland, OH	T_{AX}	°F	32.5	34.8	44.8	57.9	68.5	78.0	81.7	80.3	74.2	62.7	49.3	37.5	58.5
	T_{AN}	°F	18.5	19.9	28.4	38.3	47.9	57.2	61.4	60.5	54.0	43.6	34.3	24.6	40.7
	I	Btu/ft^2·d	388	601	922	1350	1681	1843	1828	1583	1240	867	466	318	1091
Columbus, OH	T_{AX}	°F	34.7	38.1	49.3	62.3	72.6	81.3	84.4	83.0	76.9	65.0	50.7	39.4	61.5
	T_{AN}	°F	19.4	21.5	30.6	40.5	50.2	59.0	63.2	61.7	54.6	42.8	33.5	24.7	41.8
	I	Btu/ft^2·d	459	677	980	1353	1647	1813	1755	1641	1282	945	538	387	1123
Toledo, OH	T_{AX}	°F	30.7	34.0	44.6	59.1	70.5	79.9	83.4	81.8	75.1	63.3	47.9	35.5	58.8
	T_{AN}	°F	15.5	17.5	26.1	36.5	46.6	56.0	60.2	58.4	51.2	40.1	30.6	20.6	38.3
	I	Btu/ft^2·d	435	680	997	1384	1717	1878	1849	1616	1276	911	498	355	1133
Oklahoma City, OK	T_{AX}	°F	46.6	52.2	61.0	71.7	79.0	87.6	93.5	92.8	84.7	74.3	59.9	50.7	71.2
	T_{AN}	°F	25.2	29.4	37.1	48.6	57.7	66.3	70.6	69.4	61.9	50.2	37.6	29.1	48.6
	I	Btu/ft^2·d	801	1055	1400	1725	1918	2144	2128	1950	1554	1233	901	725	1461
Tulsa, OK	T_{AX}	°F	45.6	51.9	60.8	72.4	79.7	87.9	93.9	93.0	85.0	74.9	60.2	50.3	71.3
	T_{AN}	°F	24.8	29.5	37.7	49.5	58.5	67.5	72.4	70.3	62.5	50.3	38.1	29.3	49 2
	I	Btu/ft^2·d	732	978	1306	1603	1822	2021	2031	1865	1473	1164	827	659	1373
Astoria, OR	T_{AX}	°F	46.8	50.6	51.9	55.5	60.2	63 9	67.9	68.6	67.8	61.4	53.5	48.8	58.1
	T_{AN}	°F	35.4	37.1	36.9	39.7	44.1	49 2	52.2	52.6	49.2	44.3	39.7	37.3	43.1
	I	Btu/ft^2·d	315	545	866	1253	1608	1626	1746	1499	1183	713	387	261	1000
Portland, OR	T_{AX}	°F	44.3	50.4	54.5	60.2	66.9	72.7	79.5	78.6	74.2	63.9	52.3	46.4	62.0
	T_{AN}	°F	33.5	36.0	37.4	40.6	46.4	52.2	55.8	55.8	51.1	44.6	38.6	35.4	44 0
	I	Btu/ft^2·d	310	554	895	1308	1663	1773	2037	1674	1217	724	388	260	1067
Philadelphia, PA	T_{AX}	°F	38.6	41.1	50.5	63.2	73.0	81.7	86.1	84.6	77.8	66.5	54.5	43.0	63.4
	T_{AN}	°F	23.8	25.0	33.1	42.6	52.5	61.5	66.8	66.0	58.6	46.5	37.1	28.0	45.1
	I	Btu/ft^2·d	555	795	1108	1434	1660	1811	1758	1575	1281	959	619	470	1169

Table 7.1-7 (cont.).

Location	Property		Monthly Averages												Annual Average
	Symbol	Units	Jan.	Feb.	Mar.	Apr.	May	June	July	Aug.	Sept.	Oct.	Nov.	Dec.	
Pittsburgh, PA	T_{AX}	°F	34.1	36.8	47.6	60.7	70.8	79.1	82.7	81.1	74.8	62.9	49.8	38.4	59.9
	T_{AN}	°F	19.2	20.7	29.4	39.4	48.5	57.1	61.3	60.1	53.3	42.1	33.3	24.3	40.7
	I	Btu/ft^2·d	424	625	943	1317	1602	1762	1689	1510	1209	895	505	347	1069
Providence, RI	T_{AX}	°F	36.4	37.7	45.5	57.5	67.6	76.6	81.7	80.3	73.1	63.2	51.9	40.5	59.3
	T_{AN}	°F	20.0	20.9	29.2	38.3	47.6	57.0	63.3	61.9	53.8	43.1	34.8	24.1	41.2
	I	Btu/ft^2·d	506	739	1032	1374	1655	1776	1695	1499	1209	907	538	419	1112
Columbia, SC	T_{AX}	°F	56.2	59.5	67.1	77.0	83.8	89.2	91.9	91.0	85.5	76.5	67.1	58.8	75.3
	T_{AN}	°F	33.2	34.6	41.9	50.5	59.1	66.1	70.1	69.4	63.9	50.3	40.6	34.7	51.2
	I	Btu/ft^2·d	762	1021	1355	1747	1895	1947	1842	1703	1439	1211	921	722	1380
Sioux Falls, SD	T_{AX}	°F	22.9	29.3	40.1	58.1	70.5	80.3	86.2	83.9	73.5	62.1	43.7	29.3	56.7
	T_{AN}	°F	1.9	8.9	20.6	34.6	45.7	56.3	61.8	59.7	48.5	36.7	22.3	10.1	33.9
	I	Btu/ft^2·d	533	802	1152	1543	1894	2100	2150	1845	1410	1005	608	441	1290
Memphis, TN	T_{AX}	°F	48.3	53.0	61.4	72.9	81.0	88.4	91.5	90.3	84.3	74.5	61.4	52.3	71.6
	T_{AN}	°F	30.9	34.1	41.9	52.2	60.9	68.9	72.6	70.8	64.1	51.3	41.1	34.3	51.9
	I	Btu/ft^2·d	683	945	1278	1639	1885	2045	1972	1824	1471	1205	817	629	1366
Amarillo, TX	T_{AX}	°F	49.1	53.1	60.8	71.0	79.1	88.2	91.4	89.6	82.4	72.7	58.7	51.8	70.7
	T_{AN}	°F	21.7	26.1	32.0	42.0	51.9	61.5	66.2	64.5	56.9	45.5	32.1	24.8	43.8
	I	Btu/ft^2·d	960	1244	1631	2019	2212	2393	2281	2103	1761	1404	1033	872	1659
Corpus Christi, TX	T_{AX}	°F	66.5	69.9	76.1	82.1	86.7	91.2	94.2	94.1	90.1	83.9	75.1	69.3	81.6
	T_{AN}	°F	46.1	48.7	55.7	63.9	69.5	74.1	75.6	75.8	72.8	64.1	54.9	48.8	62.5
	I	Btu/ft^2·d	898	1147	1430	1642	1866	2094	2186	1991	1687	1416	1043	845	1521
Dallas, TX	T_{AX}	°F	54.0	59.1	67.2	76.8	84.4	93.2	97.8	97.3	89.7	79.5	66.2	58.1	76.9
	T_{AN}	°F	33.9	37.8	44.9	55.0	62.9	70.8	74.7	73.7	67.5	56.3	44.9	37.4	55.0
	I	Btu/ft^2·d	822	1071	1422	1627	1889	2135	2122	1950	1587	1276	936	780	1468
Houston, TX	T_{AX}	°F	61.9	65.7	72.1	79.0	85.1	90.9	93.6	93.1	88.7	81.9	71.6	65.2	79.1
	T_{AN}	°F	40.8	43.2	49.8	58.3	64.7	70.2	72.5	72.1	68.1	57.5	48.6	42.7	57.4
	I	Btu/ft^2·d	772	1034	1297	1522	1775	1898	1828	1686	1471	1276	924	730	1351
Midland-Odessa, TX	T_{AX}	°F	57.6	62.1	69.8	78.8	86.0	93.0	94.2	93.1	86.4	77.7	65.5	59.7	77.0
	T_{AN}	°F	29.7	33.3	40.2	49 4	58.2	66.6	69.2	68.0	61.9	51.1	39.0	32.2	49.9
	I	Btu/ft^2·d	1081	1383	1839	2192	2430	2562	2389	2210	1844	1522	1176	1000	1802
Salt Lake City, UT	T_{AX}	°F	37.4	43.7	51.5	61.1	72.4	83.3	93.2	90.0	80.0	66.7	50.2	38.9	64.0
	T_{AN}	°F	19.7	24.4	29.9	37.2	45.2	53.3	61.8	59.7	50.0	39.3	29.2	21.6	39.3
	I	Btu/ft^2·d	639	989	1454	1894	2362	2561	2590	2254	1843	1293	788	570	1603

Table 7.1-7 (cont.).

Location	Property		Monthly Averages												Annual Average
	Symbol	Units	Jan.	Feb.	Mar.	Apr.	May	June	July	Aug.	Sept.	Oct.	Nov.	Dec.	
Richmond, VA	T_{AX}	°F	46.7	49.6	58.5	70.6	77.9	84.8	88.4	87.1	81.0	70.5	60.5	50.2	68.8
	T_{AN}	°F	26.5	28.1	35.8	45.1	54.2	62.2	67.2	66.4	59.3	46.7	37.3	29.6	46.5
	I	Btu/ft^2 day	632	877	1210	1566	1762	1872	1774	1601	1348	1033	733	567	1248
Seattle, WA (Sea-Tac Airport)	T_{AX}	°F	43.9	48.8	51.1	56.8	64.0	69.2	75.2	73.9	68.7	59.5	50.3	45.6	58.9
	T_{AN}	°F	34.3	36.8	37.2	40.5	46.0	51.1	54.3	54.3	51.2	45.3	39.3	36.3	43.9
	I	Btu/ft^2 day	262	495	849	1294	1714	1802	2248	1616	1148	656	337	211	1053
Charleston, WV	T_{AX}	°F	41.8	45.4	55.4	67.3	76.0	82.5	85.2	84.2	78.7	67.7	55.6	45.9	65.5
	T_{AN}	°F	23.9	25.8	34.1	43.3	51.8	59.4	63.8	63.1	56.4	44.0	35.0	27.8	44.0
	I	Btu/ft^2 day	498	707	1010	1356	1639	1776	1683	1514	1272	972	613	440	1123
Huntington, WV	T_{AX}	°F	41.1	45.0	55.2	67.2	75.7	82.6	85.6	84.4	78.7	67.6	55.2	45.2	65.3
	T_{AN}	°F	24.5	26.6	35.0	44.4	52.8	60.7	65.1	64.0	57.2	44.9	35.9	28.5	45.0
	I	Btu/ft^2 day	526	757	1067	1448	1710	1844	1769	1580	1306	1004	638	467	1176
Cheyenne, WY	T_{AX}	°F	37.3	40.7	43.6	54.0	64.6	75.4	83.1	80.8	72.1	61.0	46.5	40.4	58.3
	T_{AN}	°F	14.8	17.9	20.6	29.6	39.7	48.5	54.6	52.8	43.7	34.0	23.1	18.2	33.1
	I	Btu/ft^2 day	766	1068	1433	1771	1995	2258	2230	1966	1667	1242	823	671	1491

[a] References 13 and 14, T_{AX} = daily maximum ambient temperature, T_{AN} = daily minimum ambient temperature, I = daily total solar insolation factor.

Table 7.1-8. RIM-SEAL LOSS FACTORS, K_{Ra}, K_{Rb}, and n, FOR FLOATING ROOF TANKS[a]

Tank Construction And Rim-Seal System	Average-Fitting Seals		
	K_{Ra} (lb-mole/ft-yr)	K_{Rb} [lb-mole/(mph)^n-ft-yr]	n (dimensionless)
Welded Tanks			
Mechanical-shoe seal			
Primary only[b]	5.8	0.3	2.1
Shoe-mounted secondary	1.6	0.3	1.6
Rim-mounted secondary	0.6	0.4	1.0
Liquid-mounted seal			
Primary only	1.6	0.3	1.5
Weather shield	0.7	0.3	1.2
Rim-mounted secondary	0.3	0.6	0.3
Vapor-mounted seal			
Primary only	6.7[c]	0.2	3.0
Weather shield	3.3	0.1	3.0
Rim-mounted secondary	2.2	0.003	4.3
Riveted Tanks			
Mechanical-shoe seal			
Primary only	10.8	0.4	2.0
Shoe-mounted secondary	9.2	0.2	1.9
Rim-mounted secondary	1.1	0.3	1.5

Note: The rim-seal loss factors K_{Ra}, K_{Rb}, and n may only be used for wind speeds below 15 miles per hour.

[a] Reference 15.
[b] If no specific information is available, a welded tank with an average-fitting mechanical-shoe primary seal can be used to represent the most common or typical construction and rim-seal system in use for external and domed external floating roof tanks.
[c] If no specific information is available, this value can be assumed to represent the most common or typical rim-seal system currently in use for internal floating roof tanks.

Table 7.1-9. AVERAGE ANNUAL WIND SPEED (v) FOR SELECTED U. S. LOCATIONS[a]

Location	Wind Speed (mph)	Location	Wind Speed (mph)	Location	Wind Speed (mph)
Alabama		Arizona (continued)		Delaware	
Birmingham	7.2	Winslow	8.9	Wilmington	9.1
Huntsville	8.2	Yuma	7.8	District of Columbia	
Mobile	9.0			Dulles Airport	7.4
Montgomery	6.6	Arkansas		National Airport	9.4
		Fort Smith	7.6		
Alaska		Little Rock	7.8	Florida	
Anchorage	6.9			Apalachicola	7.8
Annette	10.6	California		Daytona Beach	8.7
Barrow	11.8	Bakersfield	6.4	Fort Meyers	8.1
Barter Island	13.2	Blue Canyon	6.8	Jacksonville	8.0
Bethel	12.8	Eureka	6.8	Key West	11.2
Bettles	6.7	Fresno	6.3	Miami	9.3
Big Delta	8.2	Long Beach	6.4	Orlando	8.5
Cold Bay	17.0	Los Angeles (City)	6.2	Pensacola	8.4
Fairbanks	5.4	Los Angeles Int'l. Airport	7.5	Tallahassee	6.3
Gulkana	6.8	Mount Shasta	5.1	Tampa	8.4
Homer	7.6	Sacramento	7.9	West Palm Beach	9.6
Juneau	8.3	San Diego	6.9		
King Salmon	10.8	San Francisco (City)	8.7	Georgia	
Kodiak	10.8	San Francisco Airport	10.6	Athens	7.4
Kotzebue	13.0	Santa Maria	7.0	Atlanta	9.1
McGrath	5.1	Stockton	7.5	Augusta	6.5
Nome	10.7			Columbus	6.7
St. Paul Island	17.7	Colorado		Macon	7.6
Talkeetna	4.8	Colorado Springs	10.1	Savannah	7.9
Valdez	6.0	Denver	8.7		
Yakutat	7.4	Grand Junction	8.1	Hawaii	
		Pueblo	8.7	Hilo	7.2
Arizona				Honolulu	11.4
Flagstaff	6.8	Connecticut		Kahului	12.8
Phoenix	6.3	Bridgeport	12.0	Lihue	12.2
Tucson	8.3	Hartford	8.5		

Table 7.1-9 (cont.).

Location	Wind Speed (mph)	Location	Wind Speed (mph)	Location	Wind Speed (mph)
Idaho		Louisiana		Mississippi	
Boise	8.8	Baton Rouge	7.6	Jackson	7.4
Pocatello	10.2	Lake Charles	8.7	Meridian	6.1
		New Orleans	8.2		
Illinois		Shreveport	8.4	Missouri	
Cairo	8.5			Columbia	9.9
Chicago	10.3	Maine		Kansas City	10.8
Moline	10.0	Caribou	11.2	Saint Louis	9.7
Peoria	10.0	Portland	8.8	Springfield	10.7
Rockford	10.0				
Springfield	11.2	Maryland		Montana	
		Baltimore	9.2	Billings	11.2
Indiana				Glasgow	10.8
Evansville	8.1	Massachusetts		Great Falls	12.8
Fort Wayne	10.0	Blue Hill Observatory	15.4	Helena	7.8
Indianapolis	9.6	Boston	12.5	Kalispell	6.6
South Bend	10.3	Worcester	10.1	Missoula	6.2
Iowa		Michigan		Nebraska	
Des Moines	10.9	Alpena	8.1	Grand Island	11.9
Sioux City	11.0	Detroit	10.4	Lincoln	10.4
Waterloo	10.7	Flint	10.2	Norfolk	11.7
		Grand Rapids	9.8	North Platte	10.2
Kansas		Houghton Lake	8.9	Omaha	10.6
Concordia	12.3	Lansing	10.0	Scottsbuff	10.6
Dodge City	14.0	Muskegon	10.7	Valentine	9.7
Goodland	12.6	Sault Sainte Marie	9.3		
Topeka	10.0			Nevada	
Wichita	12.3	Minnesota		Elko	6.0
		Duluth	11.1	Ely	10.3
Kentucky		International Falls	8.9	Las Vegas	9.3
Cincinnati Airport	9.1	Minneapolis-Saint Paul	10.6	Reno	6.6
Jackson	7.2	Rochester	13.1	Winnemucca	8.0
Lexington	9.3	Saint Cloud	8.0		
Louisville	8.4				

Table 7.1-9 (cont.).

Location	Wind Speed (mph)	Location	Wind Speed (mph)	Location	Wind Speed (mph)
New Hampshire		Ohio		Rhode Island	
Concord	6.7	Akron	9.8	Providence	10.6
Mount Washington	35.3	Cleveland	10.6		
		Columbus	8.5	South Carolina	
New Jersey		Dayton	9.9	Charleston	8.6
Atlantic City	10.1	Mansfield	11.0	Columbia	6.9
Newark	10.2	Toledo	9.4	Greenville-Spartanburg	6.9
		Youngstown	9.9		
New Mexico				South Dakota	
Albuquerque	9.1	Oklahoma		Aberdeen	11.2
Roswell	8.6	Oklahoma City	12.4	Huron	11.5
		Tulsa	10.3	Rapid City	11.3
New York				Sioux Falls	11.1
Albany	8.9	Oregon			
Birmingham	10.3	Astoria	8.6	Tennessee	
Buffalo	12.0	Eugene	7.6	Bristol-Johnson City	5.5
New York (Central Park)	9.4	Medford	4.8	Chattanooga	6.1
New York (JFK Airport)	12.0	Pendleton	8.7	Knoxville	7.0
New York (La Guardia Airport)	12.2	Portland	7.9	Memphis	8.9
Rochester	9.7	Salem	7.1	Nashville	8.0
Syracuse	9.5	Sexton Summit	11.8	Oak Ridge	4.4
North Carolina		Pennsylvania		Texas	
Asheville	7.6	Allentown	9.2	Abilene	12.0
Cape Hatteras	11.1	Avoca	8.3	Amarillo	13.6
Charlotte	7.5	Erie	11.3	Austin	9.2
Greensboro-High Point	7.5	Harrisburg	7.6	Brownsville	11.5
Raleigh	7.8	Philadelphia	9.5	Corpus Christi	12.0
Wilmington	8.8	Pittsburgh Int'l Airport	9.1	Dallas-Fort Worth	10.8
		Williamsport	7.8	Del Rio	9.9
North Dakota				El Paso	8.9
Bismark	10.2	Puerto Rico		Galveston	11.0
Fargo	12.3	San Juan	8.4	Houston	7.9
Williston	10.1			Lubbock	12.4

Table 7.1-9 (cont.).

Location	Wind Speed (mph)	Location	Wind Speed (mph)
Texas (continued)		Wisconsin	
Midland-Odessa	11.1	Green Bay	10.0
Port Arthur	9.8	La Crosse	8.8
San Angelo	10.4	Madison	9.9
San Antonio	9.3	Milwaukee	11.6
Victoria	10.1		
Waco	11.3	Wyoming	
Wichita Falls	11.7	Casper	12.9
		Cheyenne	13.0
Utah		Lander	6.8
Salt Lake City	8.9	Sheridan	8.0
Vermont			
Burlington	8.9		
Virginia			
Lynchburg	7.7		
Norfolk	10.7		
Richmond	7.7		
Roanoke	8.1		
Washington			
Olympia	6.7		
Quillayute	6.1		
Seattle Int'l. Airport	9.0		
Spokane	8.9		
Walla Walla	5.3		
Yakima	7.1		
West Virginia			
Belkley	9.1		
Charleston	6.3		
Elkins	6.2		
Huntington	6.6		

[a] Reference 13.

Table 7.1-10. AVERAGE CLINGAGE FACTORS, C[a]
($bbl/10^3\ ft^2$)

Product Stored	Shell Condition		
	Light Rust	Dense Rust	Gunite Lining
Gasoline	0.0015	0.0075	0.15
Single-component stocks	0.0015	0.0075	0.15
Crude oil	0.0060	0.030	0.60

[a] Reference 3. If no specific information is available, the values in this table can be assumed to represent the most common or typical condition of tanks currently in use.

Table 7.1-11. TYPICAL NUMBER OF COLUMNS AS A FUNCTION OF TANK DIAMETER FOR INTERNAL FLOATING ROOF TANKS WITH COLUMN-SUPPORTED FIXED ROOFS[a]

Tank Diameter Range D, (ft)	Typical Number Of Columns, N_C
$0 < D \leq 85$	1
$85 < D \leq 100$	6
$100 < D \leq 120$	7
$120 < D \leq 135$	8
$135 < D \leq 150$	9
$150 < D \leq 170$	16
$170 < D \leq 190$	19
$190 < D \leq 220$	22
$220 < D \leq 235$	31
$235 < D \leq 270$	37
$270 < D \leq 275$	43
$275 < D \leq 290$	49
$290 < D \leq 330$	61
$330 < D \leq 360$	71
$360 < D \leq 400$	81

[a] Reference 4. This table was derived from a survey of users and manufacturers. The actual number of columns in a particular tank may vary greatly with age, fixed roof style, loading specifications, and manufacturing prerogatives. Data in this table should not be used when actual tank data are available.

Table 7.1-12. DECK-FITTING LOSS FACTORS, K_{Fa}, K_{Fb}, AND m, AND TYPICAL NUMBER OF DECK FITTINGS, N_F[a]

Fitting Type And Construction Details	Loss Factors			Typical Number Of Fittings, N_F
	K_{Fa} (lb-mole/yr)	K_{Fb} (lb-mole/(mph)^m-yr)	m (dimensionless)	
Access hatch (24-inch diameter well)				1
Bolted cover, gasketed[b]	1.6	0	0	
Unbolted cover, ungasketed	36[c]	5.9	1.2	
Unbolted cover, gasketed	31	5.2	1.3	
Fixed roof support column well[d]				N_C (Table 7.1-11)
Round pipe, ungasketed sliding cover	31			
Round pipe, gasketed sliding cover	25			
Round pipe, flexible fabric sleeve seal	10			
Built-up column, ungasketed sliding cover[c]	47			
Built-up column, gasketed sliding cover	33			
Unslotted guide-pole and well (8-inch diameter unslotted pole, 21-inch diameter well)				1
Ungasketed sliding cover[b]	31	150	1.4	
Ungasketed sliding cover w/pole sleeve	25	2.2	2.1	
Gasketed sliding cover	25	13	2.2	
Gasketed sliding cover w/pole wiper	14	3.7	0.78	
Gasketed sliding cover w/pole sleeve	8.6	12	0.81	
Slotted guide-pole/sample well (8-inch diameter slotted pole, 21-inch diameter well)[e]				f
Ungasketed or gasketed sliding cover	43	270	1.4	
Ungasketed or gasketed sliding cover, with float[g]	31	36	2.0	
Gasketed sliding cover, with pole wiper	41	48	1.4	
Gasketed sliding cover, with pole sleeve	11	46	1.4	
Gasketed sliding cover, with pole sleeve and pole wiper	8.3	4.4	1.6	
Gasketed sliding cover, with float and pole wiper[g]	21	7.9	1.8	
Gasketed sliding cover, with float, pole sleeve, and pole wiper[h]	11	9.9	0.89	
Gauge-float well (automatic gauge)				1
Unbolted cover, ungasketed[b]	14[c]	5.4	1.1	
Unbolted cover, gasketed	4.3	17	0.38	
Bolted cover, gasketed	2.8	0	0	
Gauge-hatch/sample port				1
Weighted mechanical actuation, gasketed[b]	0.47	0.02	0.97	
Weighted mechanical actuation, ungasketed	2.3	0	0	
Slit fabric seal, 10% open area[c]	12			
Vacuum breaker				N_{vb} (Table 7.1-13)[j]
Weighted mechanical actuation, ungasketed	7.8	0.01	4.0	
Weighted mechanical actuation, gasketed[b]	6.2[c]	1.2	0.94	

Table 7.1-12 (cont.).

Fitting Type And Construction Details	Loss Factors			Typical Number Of Fittings, N_F
	K_{Fa} (lb-mole/yr)	K_{Fb} (lb-mole/(mph)^m-yr)	m (dimensionless)	
Deck drain (3-inch diameter)				N_d (Table 7.1-13)
Open[b]	1.5	0.21	1.7	
90% closed	1.8	0.14	1.1	
Stub drain (1-inch diameter)[k]	1.2			N_d (Table 7.1-15)
Deck leg (3-inch diameter)				N_l (Table 7.1-15), (Table 7.1-14)
Adjustable, internal floating deck[c]	7.9			
Adjustable, pontoon area - ungasketed[b]	2.0	0.37	0.91	
Adjustable, pontoon area - gasketed	1.3	0.08	0.65	
Adjustable, pontoon area - sock	1.2	0.14	0.65	
Adjustable, center area - ungasketed[b]	0.82	0.53	0.14	
Adjustable, center area - gasketed[m]	0.53	0.11	0.13	
Adjustable, center area - sock[m]	0.49	0.16	0.14	
Adjustable, double-deck roofs	0.82	0.53	0.14	
Fixed	0	0	0	
Rim vent[n]				1
Weighted mechanical actuation, ungasketed	0.68	1.8	1.0	
Weighted mechanical actuation, gasketed[b]	0.71	0.10	1.0	
Ladder well				1[d]
Sliding cover, ungasketed[c]	76			
Sliding cover, gasketed	56			

Note: The deck-fitting loss factors, K_{Fa}, K_{Fb}, and m, may only be used for wind speeds below 15 miles per hour.

[a] Reference 5, unless otherwise indicated.
[b] If no specific information is available, this value can be assumed to represent the most common or typical deck fitting currently in use for external and domed external floating roof tanks.
[c] If no specific information is available, this value can be assumed to represent the most common or typical deck fitting currently in use for internal floating roof tanks.
[d] *Column wells and ladder wells are not typically used with self supported fixed roofs.*
[e] References 16,19.
[f] A slotted guide-pole/sample well is an optional fitting and is not typically used.
[g] Tests were conducted with floats positioned with the float wiper at and 1 inch above the sliding cover. The user is cautioned against applying these factors to floats that are positioned with the wiper or top of the float below the sliding cover ("short floats"). The emission factor for such a float is expected to be between the factors for a guidepole without a float and with a float, depending upon the position of the float top and/or wiper within the guidepole.
[h] Tests were conducted with floats positioned with the float wiper at varying heights with respect to the sliding cover. This fitting configuration also includes a pole sleeve which restricts the airflow from the well vapor space into the slotted guidepole. Consequently, the float position within the guidepole (at, above, or below the sliding cover) is not expected to significantly affect emission levels for this fitting configuration, since the function of the pole sleeve is to restrict the flow of vapor from the vapor space below the deck into the guidepole.
[j] N_{vb} = 1 for internal floating roof tanks.
[k] Stub drains are not used on welded contact internal floating decks.
[m] These loss factors were derived using the results from pontoon-area deck legs with gaskets and socks.
[n] Rim vents are used only with mechanical-shoe primary seals.

Table 7.1-13. EXTERNAL FLOATING ROOF TANKS: TYPICAL NUMBER OF VACUUM BREAKERS, N_{vb}, AND DECK DRAINS, N_d[a]

Tank Diameter D (feet)[b]	Number Of Vacuum Breakers, N_{vb}		Number Of Deck drains, N_d
	Pontoon Roof	Double-Deck Roof	
50	1	1	1
100	1	1	1
150	2	2	2
200	3	2	3
250	4	3	5
300	5	3	7
350	6	4	ND
400	7	4	ND

[a] Reference 3. This table was derived from a survey of users and manufacturers. The actual number of vacuum breakers may vary greatly depending on throughput and manufacturing prerogatives. The actual number of deck drains may also vary greatly depending on the design rainfall and manufacturing prerogatives. For tanks more than 350 feet in diameter, actual tank data or the manufacturer's recommendations may be needed for the number of deck drains. This table should not be used when actual tank data are available. ND = no data.

[b] If the actual diameter is between the diameters listed, the closest diameter listed should be used. If the actual diameter is midway between the diameters listed, the next larger diameter should be used.

Table 7.1-14. EXTERNAL FLOATING ROOF TANKS: TYPICAL NUMBER OF ROOF LEGS, N_l[a]

Tank Diameter, D (feet)[b]	Pontoon Roof		Number Of Legs On Double-Deck Roof
	Number Of Pontoon Legs	Number Of Center Legs	
30	4	2	6
40	4	4	7
50	6	6	8
60	9	7	10
70	13	9	13
80	15	10	16
90	16	12	20
100	17	16	25
110	18	20	29
120	19	24	34
130	20	28	40
140	21	33	46
150	23	38	52
160	26	42	58
170	27	49	66
180	28	56	74
190	29	62	82
200	30	69	90
210	31	77	98
220	32	83	107
230	33	92	115
240	34	101	127
250	35	109	138
260	36	118	149
270	36	128	162
280	37	138	173
290	38	148	186
300	38	156	200
310	39	168	213
320	39	179	226
330	40	190	240
340	41	202	255
350	42	213	270
360	44	226	285
370	45	238	300
380	46	252	315
390	47	266	330
400	48	281	345

[a] Reference 3. This table was derived from a survey of users and manufacturers. The actual number of roof legs may vary greatly depending on age, style of floating roof, loading specifications, and manufacturing prerogatives. This table should not be used when actual tank data are available.

[b] If the actual diameter is between the diameters listed, the closest diameter listed should be used. If the actual diameter is midway between the diameters listed, the next larger diameter should be used.

Table 7.1-15. INTERNAL FLOATING ROOF TANKS: TYPICAL NUMBER OF DECK LEGS, N_1, AND STUB DRAINS, N_d[a]

Deck fitting type	Typical Number Of Fittings, N_F
Deck leg or hanger well[b]	$(5+\frac{D}{10}+\frac{D^2}{600})$
Stub drain (1-inch diameter)[b,c]	$(\frac{D^2}{125})$

[a] Reference 4
[b] D = tank diameter, ft
[c] Not used on welded contact internal floating decks.

Table 7.1-16. DECK SEAM LENGTH FACTORS (S_D) FOR TYPICAL DECK CONSTRUCTIONS FOR INTERNAL FLOATING ROOF TANKS[a]

Deck Construction	Typical Deck Seam Length Factor, S_D (ft/ft^2)
Continuous sheet construction[b]	
5 ft wide	0.20[c]
6 ft wide	0.17
7 ft wide	0.14
Panel construction[d]	
5 x 7.5 ft rectangular	0.33
5 x 12 ft rectangular	0.28

[a] Reference 4. Deck seam loss applies to bolted decks only.
[b] $S_D = 1/W$, where W = sheet width (ft).
[c] If no specific information is available, this value can be assumed to represent the most common bolted decks currently in use.
[d] $S_D = (L+W)/LW$, where W = panel width (ft) and L = panel length (ft).

7.1.5 Sample Calculations

Example 1 - Chemical Mixture in a Fixed Roof Tank

Determine the yearly emission rate of the total product mixture and each component for a chemical mixture stored in a vertical cone roof tank in Denver, Colorado. The chemical mixture contains (for every 3,171 lb of mixture) 2,812 lb of benzene, 258 lb of toluene, and 101 lb of cyclohexane. The tank is 6 ft in diameter, 12 ft high, usually holds about 8 ft of product, and is painted white. The tank working volume is 1,690 gallons. The number of turnovers per year for the tank is five (i. e., the throughput of the tank is 8,450 gal/yr).

Solution

1. Determine tank type. The tank is a fixed-cone roof, vertical tank.

2. Determine estimating methodology. The product is made up of three organic liquids, all of which are miscible in each other, which makes a homogenous mixture if the material is well mixed. The tank emission rate will be based upon the properties of the mixture. Raoult's Law (as discussed in the HAP Speciation Section) is assumed to apply to the mixture and will be used to determine the properties of the mixture.

3. Select equations to be used. For a vertical, fixed roof storage tank, the following equations apply:

$$L_T = L_S + L_W \tag{1-1}$$

$$L_S = 365\ W_V V_V K_E K_S \tag{1-2}$$

$$L_W = 0.0010\ M_V P_{VA} Q K_N K_P \tag{1-23}$$

where:

L_T = total loss, lb/yr

L_S = standing storage loss, lb/yr

L_W = working loss, lb/yr

V_V = tank vapor space volume, ft^3

$$V_V = \pi/4\ D^2\ H_{VO} \tag{1-3}$$

W_V = vapor density, lb/ft^3

$$W_V = \frac{M_V P_{VA}}{R T_{LA}} \quad (1\text{-}9)$$

K_E = vapor space expansion factor, dimensionless

$$K_E = \frac{\Delta T_V}{T_{LA}} + \frac{\Delta P_V - \Delta P_B}{P_A - P_{VA}} \quad (1\text{-}16)$$

K_S = vented vapor space saturation factor, dimensionless

$$K_S = \frac{1}{1 + 0.053\ P_{VA} H_{VO}} \quad (1\text{-}22)$$

D = diameter, ft

H_{VO} = vapor space outage, ft

M_V = molecular weight of vapor, lb/lb-mole

P_{VA} = vapor pressure at the daily average liquid surface temperature, psia

R = ideal gas constant = $\frac{10.731\ \text{psia} \cdot \text{ft}^3}{\text{lb-mole} \cdot {}^\circ\text{R}}$

T_{LA} = daily average liquid surface temperature, °R

ΔT_V = daily vapor temperature range, °R

ΔP_V = daily vapor pressure range, psia

ΔP_B = breather vent pressure setting range, psi

P_A = atmospheric pressure, psia

Q = annual net throughput, bbl/yr

K_N = working loss turnover factor, dimensionless

K_P = working loss product factor, dimensionless

4. Calculate each component of the standing storage loss and working loss functions.

   a. Tank vapor space volume, V_V:

$$V_V = \pi/4\ D^2\ H_{VO} \quad (1\text{-}3)$$

D = 6 ft (given)

For a cone roof, the vapor space outage, H_{VO} is calculated by:

$$H_{VO} = H_S - H_L + H_{RO} \tag{1-4}$$

H_S = tank shell height, 12 ft (given)

H_L = stock liquid height, 8 ft (given)

H_{RO} = roof outage, $1/3\ H_R = 1/3(S_R)(R_S)$ (1-6)

S_R = tank cone roof slope, 0.0625 ft/ft (given) (see Note 1 to Equation 1-4)

R_S = tank shell radius = 1/2 D = 1/2 (6) = 3

Substituting values in Equation 1-6 yields,

$$H_{RO} = \frac{1}{3}(0.0625)(3) = 0.0625 \text{ ft}$$

Then use Equation 1-4 to calculate H_{VO},

$$H_{VO} = 12 - 8 + 0.0625 = 4.0625 \text{ ft}$$

Therefore,

$$V_V = \frac{\pi}{4}(6)^2\ (4.0625) = 114.86 \text{ ft}^3$$

b. Vapor density, W_V:

$$W_V = \frac{M_V\ P_{VA}}{R\ T_{LA}} \tag{1-9}$$

R = ideal gas constant = $10.731\ \frac{\text{psia}\cdot\text{ft}^3}{\text{lb-mole}\cdot{}^\circ\text{R}}$

M_V = stock vapor molecular weight, lb/lb-mole

P_{VA} = stock vapor pressure at the daily average liquid surface temperature, psia

T_{LA} = daily average liquid surface temperature, °R

First, calculate T_{LA} using Equation 1-13.

$$T_{LA} = 0.44\ T_{AA} + 0.56\ T_B + 0.0079\ \alpha\ I \tag{1-13}$$

where:

T_{AA} = daily average ambient temperature, °R

T_B = liquid bulk temperature, °R

I = daily total solar insolation, Btu/ft^2·d = 1,568 (see Table 7.1-7)

α = tank paint solar absorptance = 0.17 (see Table 7.1-6)

T_{AA} and T_B must be calculated from Equations 1-14 and 1-15.

$$T_{AA} = \frac{T_{AX} + T_{AN}}{2} \tag{1-14}$$

from Table 7.1-7, for Denver, Colorado:

T_{AX} = daily maximum ambient temperature = 64.3°F

T_{AN} = daily minimum ambient temperature = 36.2°F

Converting to °R:

T_{AX} = 64.3 + 460 = 524.3°R

T_{AN} = 36.2 + 460 = 496.2°R

Therefore,

T_{AA} = (524.3 + 496.2)/2 = 510.25 °R

T_B = liquid bulk temperature = $T_{AA} + 6\alpha - 1$ (1-15)

T_{AA} = 510.25 °R from previous calculation

α = paint solar absorptance = 0.17 (see Table 7.1-6)

I = daily total solar insolation on a horizontal surface = 1,568 Btu/ft^2·d (see Table 7.1-7)

Substituting values in Equation 1-15

T_B = 510.25 + 6 (0.17) - 1 = 510.27 °R

Using Equation 1-13,

T_{LA} = (0.44) (510.25°R) + 0.56 (510.27°R) + 0.0079 (0.17) (1,568) = 512.36°R

Second, calculate P_{VA} using Raoult's Law.

According to Raoult's Law, the partial pressure of a component is the product of its pure vapor pressure and its liquid mole fraction. The sum of the partial pressures is equal to the total vapor pressure of the component mixture stock.

The pure vapor pressures for benzene, toluene, and cyclohexane can be calculated from Antoine's equation. Table 7.1-5 provides the Antoine's coefficients for benzene, which are A = 6.905, B = 1,211.033, and C = 220.79. For toluene, A = 6.954, B = 1,344.8, and C = 219.48. For cyclohexane, A = 6.841, B = 1,201.53, and C = 222.65. Therefore:

$$\log P = A - \frac{B}{T + C}$$

T_{LA}, average liquid surface temperature (°C) = (512.36 - 492)/1.8 = 11

For benzene,

$$\log P = 6.905 - \frac{1{,}211.033}{(11°C + 220.79)}$$

P = 47.90 mmHg = 0.926 psia

Similarly for toluene and cyclohexane,

P = 0.255 psia for toluene

P = 0.966 psia for cyclohexane

In order to calculate the mixture vapor pressure, the partial pressures need to be calculated for each component. The partial pressure is the product of the pure vapor pressures of each component (calculated above) and the mole fractions of each component in the liquid.

The mole fractions of each component are calculated as follows:

Component	Amount, lb	$\div M_i$	Moles	x_i
Benzene	2,812	78.1	36.0	0.90
Toluene	258	92.1	2.80	0.07
Cyclohexane	101	84.2	1.20	0.03
Total			40.0	1.00

where:

M_i = molecular weight of component

x_i = liquid mole fraction

The partial pressures of the components can then be calculated by multiplying the pure vapor pressure by the liquid mole fraction as follows:

Component	P at 52°F	x_i	$P_{partial}$
Benzene	0.926	0.90	0.833
Toluene	0.255	0.07	0.018
Cyclohexane	0.966	0.03	0.029
Total		1.0	0.880

The vapor pressure of the mixture is then 0.880 psia.

Third, calculate the molecular weight of the vapor, M_V. Molecular weight of the vapor depends upon the mole fractions of the components in the vapor.

$$M_V = \Sigma M_i y_i$$

where:

M_i = molecular weight of the component

y_i = vapor mole fraction

The vapor mole fractions, y_i, are equal to the partial pressure of the component divided by the total vapor pressure of the mixture.

Therefore,

$$y_{benzene} = P_{partial}/P_{total} = 0.833/0.880 = 0.947$$

Similarly, for toluene and cyclohexane,

$$y_{toluene} = P_{partial}/P_{total} = 0.020$$

$$y_{cyclohexane} = P_{partial}/P_{total} = 0.033$$

The mole fractions of the vapor components sum to 1.0.

The molecular weight of the vapor can be calculated as follows:

Component	M_i	y_i	M_v
Benzene	78.1	0.947	74.0
Toluene	92.1	0.020	1.84
Cyclohexane	84.2	0.033	2.78
Total		1.0	78.6

Since all variables have now been solved, the stock density, W_V, can be calculated:

$$W_V = \frac{M_V P_{VA}}{R\ T_{LA}}$$

$$\frac{(78.6)\ (0.880)}{(10.731)\ (512.36)} = 1.26 \times 10^{-2}\ \frac{lb}{ft^3}$$

c. Vapor space expansion factor, K_E:

$$K_E = \frac{\Delta T_V}{T_{LA}} + \frac{\Delta P_V - \Delta P_B}{P_A - P_{VA}} \qquad (1\text{-}16)$$

where:

ΔT_V = daily vapor temperature range, °R

ΔP_V = daily vapor pressure range, °R

ΔP_B = breather vent pressure setting range, psia

P_A = atmospheric pressure, 14.7 psia (given)

P_{VA} = vapor pressure at daily average liquid surface temperature, psia = 0.880 psia (from Step 4b)

T_{LA} = daily average liquid surface temperature, °R = 512.36°R (from Step 4b)

First, calculate the daily vapor temperature range from Equation 1-17:

$$\Delta T_V = 0.72\Delta T_A + 0.028\alpha I \qquad (1\text{-}17)$$

where:

ΔT_V = daily vapor temperature range, °R

ΔT_A = daily ambient temperature range = T_{AX} - T_{AN}

α = tank paint solar absorptance, 0.17 (given)

I = daily total solar insolation, 1,568 Btu/ft^2·d (given)

from Table 7.1-7, for Denver, Colorado:

T_{AX} = 64.3°F

T_{AN} = 36.2°F

Converting to °R,

$T_{AX} = 64.3 + 460 = 524.3°R$

$T_{AN} = 36.2 + 460 = 496.2°R$

From equation 1-17 and $\Delta T_{AX} = T_{AX} - T_{AN}$

$\Delta T_A = 524.3 - 496.2 = 28.1°R$

Therefore,

$\Delta T_V = 0.72\ (28.1) + (0.028)(0.17)(1568) = 27.7°R$

Second, calculate the daily vapor pressure range using Equation 1-18:

$$\Delta P_V = P_{VX} - P_{VN} \qquad (1\text{-}18)$$

P_{VX}, P_{VN} = vapor pressures at the daily maximum, minimum liquid temperatures can be calculated in a manner similar to the P_{VA} calculation shown earlier.

T_{LX} = maximum liquid temperature, $T_{LA} + 0.25\ \Delta T_V$ (from Figure 7.1-17)

T_{LN} = minimum liquid temperature, $T_{LA} - 0.25\ \Delta T_V$ (from Figure 7.1-17)

T_{LA} = 512.36 (from Step 4b)

ΔT_V = 27.7°R

$T_{LX} = 512.36 + (0.25)\ (27.7) = 519.3°R$ or 59°F

$T_{LN} = 512.36 - (0.25)\ (27.7) = 505.4°R$ or 45°F

Using Antoine's equation, the pure vapor pressures of each component at the minimum liquid surface temperature are:

$P_{benzene} = 0.758$ psia

$P_{toluene} = 0.203$ psia

$P_{cyclohexane} = 0.794$ psia

The partial pressures for each component at T_{LN} can then be calculated as follows:

Component	P at 45°F	x_i	$P_{partial}$
Benzene	0.758	0.90	0.68
Toluene	0.203	0.07	0.01
Cyclohexane	0.794	0.03	0.02
Total		1.0	0.71

Using Antoine's equation, the pure vapor pressures of each component at the maximum liquid surface temperature are:

$$P_{benzene} = 1.14 \text{ psia}$$

$$P_{toluene} = 0.32 \text{ psia}$$

$$P_{cyclohexane} = 1.18 \text{ psia}$$

The partial pressures for each component at T_{LX} can then be calculated as follows:

Component	P	x_i	$P_{partial}$
Benzene	1.14	0.90	1.03
Toluene	0.32	0.07	0.02
Cyclohexane	1.18	0.03	0.04
Total		1.0	1.09

Therefore, the vapor pressure range, $\Delta P_V = P_{LX} - P_{LN} = 1.09 - 0.710 = 0.38$ psia.

Next, calculate the breather vent pressure, ΔP_B, from Equation 1-20:

$$\Delta P_B = P_{BP} - P_{BV} \qquad (1\text{-}20)$$

where:

P_{BP} = breather vent pressure setting = 0.03 psia (given) (see Note 3 to Equation 1-16)

P_{BV} = breather vent vacuum setting = -0.03 psig (given) (see Note 3 to Equation 1-16)

$\Delta P_B = 0.03 - (-0.03) = 0.06$ psig

Finally, K_E, can be calculated by substituting values into Equation 1-16.

$$K_E = \frac{(27.7)}{(512.36)} + \frac{0.38 - 0.06 \text{ psia}}{14.7 \text{ psia} - 0.880 \text{ psia}} = 0.077$$

d. Vented vapor space saturation factor, K_S:

$$K_S = \frac{1}{1 + 0.053\ P_{VA}\ H_{VO}} \qquad (1\text{-}22)$$

where:

P_{VA} = 0.880 psia (from Step 4b)

H_{VO} = 4.0625 ft (from Step 4a)

$$K_S = \frac{1}{1 + 0.053(0.880)(4.0625)} = 0.841$$

5. Calculate standing storage losses.

$$L_S = 365\ W_V V_V K_E K_S$$

Using the values calculated above:

$W_V = 1.26 \times 10^{-2}\ \frac{lb}{ft^3}$ (from Step 4b)

$V_V = 114.86\ ft^3$ (from Step 4a)

$K_E = 0.077$ (from Step 4c)

$K_S = 0.841$ (from Step 4d)

$L_S = 365\ (1.26 \times 10^{-2})(114.86)(0.077)(0.841) = 34.2$ lb/yr

6. Calculate working losses.

The amount of VOCs emitted as a result of filling operations can be calculated from the following equation:

$$L_W = (0.0010)\ (M_V)(P_{VA})(Q)(K_N)(K_P) \qquad (1\text{-}23)$$

From Step 4:

M_V = 78.6 (from Step 4b)

P_{VA} = 0.880 psia (from Step 4b)

Q = 8,450 gal/yr x 2.381 bbl/100 gal = 201 bbl/yr (given)

K_P = product factor, dimensionless = 1 for volatile organic liquids, 0.75 for crude oils

K_N = 1 for turnovers $\leq$36 (given)

N = turnovers per year = 5 (given)

$L_W = (0.0010)(78.6)(0.880)(201)(1)(1) = 13.9$ lb/yr

7. Calculate total losses, L_T.

$$L_T = L_S + L_W$$

where:

$L_S =$ 34.2 lb/yr

$L_W =$ 13.9 lb/yr

$L_T =$ 34.7 + 13.9 = 48.1 lb/yr

8. Calculate the amount of each component emitted from the tank.

The amount of each component emitted is equal to the weight fraction of the component in the vapor times the amount of total VOC emitted. Assuming 100 moles of vapor are present, the number of moles of each component will be equal to the mole fraction multiplied by 100. This assumption is valid regardless of the actual number of moles present. The vapor mole fractions were determined in Step 4b. The weight of a component present in a mixture is equal to the product of the number of moles and molecular weight, M_i, of the component. The weight fraction of each component is calculated as follows:

$$\text{Weight fraction} = \frac{\text{pounds}_i}{\text{total pounds}}$$

Therefore,

Component	No. of moles x	M_i =	Pounds_i	Weight fraction
Benzene	(0.947 x 100) = 94.7	78.1	7,396	0.94
Toluene	(0.02 x 100) = 2.0	92.1	184	0.02
Cyclohexane	(0.033 x 100) = 3.3	84.3	278	0.04
Total	100		7,858	1.0

The amount of each component emitted is then calculated as:

$$\text{Emissions of component}_i = (\text{weight fraction}_i)(L_T)$$

Component	Weight fraction x	Total VOC emitted, lb/yr =	Emissions, lb/yr
Benzene	0.94	48.1	45.2
Toluene	0.02	48.1	0.96
Cyclohexane	0.04	48.1	1.92
Total			48.1

Example 2 - Chemical Mixture in a Horizontal Tank - Assuming that the tank mentioned in Example 1 is now horizontal, calculate emissions. (Tank diameter is 6 ft and length is 12 ft.)

Solution:

Emissions from horizontal tanks can be calculated by adjusting parameters in the fixed roof equations. Specifically, an effective diameter, D_E, is used in place of the tank diameter, D. The vapor space height, H_{VO}, is assumed to be half the actual tank diameter.

1. Horizontal tank adjustments. Make adjustments to horizontal tank values so that fixed roof tank equations can be used. The effective diameter, D_E, is calculated as follows:

$$D_E = \sqrt{\frac{DL}{0.785}}$$

$$D_E = \sqrt{\frac{(6)(12)}{0.785}} = 9.577 \text{ ft}$$

The vapor space height, H_{VO} is calculated as follows:

$$H_{VO} = 1/2\ D = 1/2\ (6) = 3 \text{ ft}$$

2. Given the above adjustments the standing storage loss, L_S, can be calculated.

Calculate values for each effected variable in the standing loss equation.

$$L_S = 365\ V_V W_V K_E K_S$$

V_V and K_S depend on the effective tank diameter, D_E, and vapor space height, H_{VO}.

These variables can be calculated using the values derived in Step 1:

$$V_V = \frac{\pi}{4} (D_E)^2 H_{VO}$$

$$V_V = \frac{\pi}{4} (9.577)^2 (3) = 216.10 \text{ ft}^3$$

$$K_S = \frac{1}{1 + (0.053)(P_{VA})(H_{VO})}$$

$$K_S = \frac{1}{1 + (0.053)(0.880)(3)} = 0.877$$

3. Calculate standing storage loss using the values calculated in Step 2.

$L_S = 365\ V_V W_V K_E K_S$

$V_V = 216.10\ ft^3$ (from Step 2)

$W_V = 1.26 \times 10^{-2}\ lb/ft^3$ (from Step 4b, example 1)

$K_E = 0.077$ (from Step 4c, example 1)

$K_S = 0.877$ (from Step 2)

$L_S = (365)(1.26 \times 10^{-2})(216.10)(0.077)(0.877)$

$L_S = 67.1\ lb/yr$

4. Calculate working loss. Since the parameters for working loss do not depend on diameter or vapor space height, the working loss for a horizontal tank of the same capacity as the tank in Example 1 will be the same.

$L_W = 13.9\ lb/yr$

5. Calculate total emissions.

$L_T = L_S + L_W$

$L_T = 67.1 + 13.9 = 81\ lb/yr$

Example 3 - Chemical Mixture in an External Floating Roof Tank - Determine the yearly emission rate of a mixture that is 75 percent benzene, 15 percent toluene, and 10 percent cyclohexane, by weight, from a 100,000-gallon external floating roof tank with a pontoon roof. The tank is 20 feet in diameter. The tank has 10 turnovers per year. The tank has a mechanical shoe seal (primary seal) and a shoe-mounted secondary seal. The tank is made of welded steel and has a light rust covering the inside surface of the shell. The tank shell is painted white, and the tank is located in Newark, New Jersey. The floating deck is equipped with the following fittings: (1) an ungasketed access hatch with an unbolted cover, (2) an unspecified number of ungasketed vacuum breakers with weighted mechanical actuation, and (3) ungasketed gauge hatch/sample ports with weighted mechanical actuation.

Solution:

1. Determine tank type. The tank is an external floating roof storage tank.

2. Determine estimating methodology. The product consists of three organic liquids, all of which are miscible in each other, which make a homogenous mixture if the material is well mixed. The tank emission rate will be based upon the properties of the mixture. Because the components have similar structures and molecular weights, Raoult's Law is assumed to apply to the mixture.

3. Select equations to be used. For an external floating roof tank,

$$L_T = L_{WD} + L_R + L_F + L_D \quad (2\text{-}1)$$

$$L_{WD} = (0.943)\ QCW_L/D \quad (2\text{-}4)$$

$$L_R = (K_{Ra} + K_{Rb}v^n)P^*DM_VK_C \quad (2\text{-}2)$$

$$L_F = F_FP^*M_VK_C \quad (2\text{-}5)$$

$$L_D = K_DS_DD^2P^*M_VK_C \quad (2\text{-}9)$$

where:

L_T = total loss, lb/yr

L_{WD} = withdrawal loss, lb/yr

L_R = rim seal loss from external floating roof tanks, lb/yr

L_F = deck fitting loss, lb/yr

L_D = deck seam loss, lb/yr = 0 for external floating roof tanks

Q = product average throughput, bbl/yr

C = product withdrawal shell clingage factor, bbl/1,000 ft^2; see Table 7.1-10

W_L = density of liquid, lb/gal

D = tank diameter, ft

K_{Ra} = zero wind speed rim seal loss factor, lb-mole/ft·yr; see Table 7.1.8

K_{Rb} = wind speed dependent rim seal loss factor, lb-mole/(mph)^{n}ft·yr; see Table 7.1-8

v = average ambient wind speed for the tank site, mph

n = seal wind speed exponent, dimensionless

P^* = the vapor pressure function, dimensionless

$= (P_{VA}/P_A)/(1 + [1-(P_{VA}/P_A)]^{0.5})^2$

where:

P_{VA}= the true vapor pressure of the materials stored, psia

P_A = atmospheric pressure, psia = 14.7

M_V = molecular weight of product vapor, lb/lb-mole

K_C = product factor, dimensionless

F_F = the total deck fitting loss factor, lb-mole/yr

$$= \sum_{i=1}^{n_f} (N_{F_i}K_{F_i}) = [(N_{F_1}K_{F_1}) + (N_{F_2}K_{F_2}) + \ldots + N_{F_{nf}}K_{F_{nf}})]$$

where:

N_{F_i} = number of fittings of a particular type, dimensionless. N_{F_i} is determined for the specific tank or estimated from Tables 7.1-12, 7.1-13, or 7.1-14

K_{F_i} = deck fitting loss factor for a particular type of fitting, lb-mole/yr. K_{F_i} is determined for each fitting type from Equation 2-7 and the loss factors in Table 7.1-12

n_f = number of different types of fittings, dimensionless; n_f = 3 (given)

K_D = deck seam loss per unit seam length factor, lb-mole/ft/yr

S_D = deck seam length factor, ft/ft^2

4. Identify parameters to be calculated/determined from tables. In this example, the following parameters are not specified: W_L, F_F, C, K_{Ra}, K_{Rb}, v, n, P_{VA}, P^*, M_V, and K_C. The following values are obtained from tables or assumptions:

K_C = 1.0 for volatile organic liquids (given in Section 7.1.3.2)

C = 0.0015 bbl/1,000 ft^2 for tanks with light rust (from Table 7.1-10)

K_{Ra} = 1.6 (from Table 7.1-8)

K_{Rb} = 0.3 (from Table 7.1-8)

n = 1.6 (from Table 7.1-8)

Since the wind speed for the actual tank site is not specified, the wind speed for Newark, New Jersey is used:

v = 10.2 mph (see Table 7.1-9)

F_F, W_L, P_{VA}, P^*, and M_V still need to be calculated.

F_F is estimated by calculating the individual K_{F_i} and N_{F_i} for each of the three types of deck fittings used in this example. For the ungasketed access hatches with unbolted covers, the K_F value can be calculated using information from Table 7.1-12. For this fitting, K_{Fa} = 36, K_{Fb} = 5.9, and m = 1.2. The value for K_V for external floating roof tanks is 0.7 (see Section 7.1.3, Equation 2-7). There is normally one access hatch. So,

$$K_{F\text{access hatch}} = K_{Fa} + K_{Fb}(K_v v)^m$$

$$= 36 + 5.9\ [(0.7)(10.2)]^{1.2}$$

$$K_{F\text{access hatch}} = 98.4 \text{ lb-mole/yr}$$

$$N_{F\text{access hatch}} = 1$$

The number of vacuum breakers can be taken from Table 7.1-13. For a tank with a diameter of 20 feet and a pontoon roof, the typical number of vacuum breakers is one. Table 7.1-12 provides fitting factors for weighted mechanical actuation, ungasketed vacuum breakers when the average wind speed is 10.2 mph. Based on this table, K_{Fa} = 7.8, K_{Fb} = 0.01, and m = 4. So,

$$K_{F\text{vacuum breaker}} = K_{Fa} + K_{Fb}\ (K_v v)^m$$

$$K_{F\text{vacuum breaker}} = 7.8 + 0.01\ [(0.7)(10.2)]^4$$

$$K_{F\text{vacuum breaker}} = 33.8 \text{ lb-mole/yr}$$

$$N_{F\text{vacuum breaker}} = 1$$

For the ungasketed gauge hatch/sample ports with weighted mechanical actuation, Table 7.1-12 indicates that floating roof tanks normally have only one. This table also indicates that K_{Fa} = 2.3, K_{Fb} = 0, and m = 0. Therefore,

$K_{Fgauge\ hatch/sample\ port} = K_{Fa} + K_{Fb}\ (K_v v)^m$

$K_{Fgauge\ hatch/sample\ port} = 2.3 + 0$

$K_{Fgauge\ hatch/sample\ port} = 2.3$ lb-mole/yr

$N_{Fgauge\ hatch/sample\ port} = 1$

F_F can be calculated from Equation 2-6:

$$F_F = \sum_{i=1}^{3} (K_{F_i})(N_{F_i})$$

$$= (98.4)(1)+(33.8)(1)+(2.3)(1)$$

$$= 134.5 \text{ lb-mole/yr}$$

5. Calculate mole fractions in the liquid. The mole fractions of components in the liquid must be calculated in order to estimate the vapor pressure of the liquid using Raoult's Law. For this example, the weight fractions (given as 75 percent benzene, 15 percent toluene, and 10 percent cyclohexane) of the mixture must be converted to mole fractions. First, assume that there are 1,000 lb of liquid mixture. Using this assumption, the mole fractions calculated will be valid no matter how many pounds of liquid actually are present. The corresponding amount (pounds) of each component is equal to the product of the weight fraction and the assumed total pounds of mixture of 1,000. The number of moles of each component is calculated by dividing the weight of each component by the molecular weight of the component. The mole fraction of each component is equal to the number of moles of each component divided by the total number of moles. For this example the following values are calculated:

Component	Weight fraction	Weight, lb	Molecular weight, M_i, lb/lb-mole	Moles	Mole fraction
Benzene	0.75	750	78.1	9.603	0.773
Toluene	0.15	150	92.1	1.629	0.131
Cyclohexane	0.10	100	84.2	1.188	0.096
Total	1.00	1,000		12.420	1.000

For example, the mole fraction of benzene in the liquid is 9.603/12.420 = 0.773.

6. Determine the daily average liquid surface temperature. The daily average liquid surface temperature is equal to:

$$T_{LA} = 0.44\ T_{AA} + 0.56\ T_B + 0.0079\ \alpha\ I$$

$T_{AA} = (T_{AX} + T_{AN})/2$

$T_B = T_{AA} + 6\alpha - 1$

For Newark, New Jersey (see Table 7.1-7):

$T_{AX} = 62.5°F = 522.2°R$

$T_{AN} = 45.9°F = 505.6°R$

$I = 1{,}165\ Btu/ft^2 \cdot d$

From Table 7.1-6, $\alpha = 0.17$

Therefore;

$T_{AA} = (522.2 + 505.6)/2 = 513.9°R$

$T_B = 513.9°R + 6\ (0.17) - 1 = 513.92°R$

$T_{LA} = 0.44\ (513.9) + 0.56\ (513.92) + 0.0079\ (0.17)(1{,}165)$

$= 515.5°R = 55.8°F = 56°F$

7. Calculate partial pressures and total vapor pressure of the liquid. The vapor pressure of each component at 56°F can be determined using Antoine's equation. Since Raoult's Law is assumed to apply in this example, the partial pressure of each component is the liquid mole fraction (x_i) times the vapor pressure of the component (P).

Component	P at 56°F	x_i	$P_{partial}$
Benzene	1.04	0.773	0.80
Toluene	0.29	0.131	0.038
Cyclohexane	1.08	0.096	0.104
Totals		1.00	0.942

The total vapor pressure of the mixture is estimated to be 0.942 psia.

8. Calculate mole fractions in the vapor. The mole fractions of the components in the vapor phase are based upon the partial pressure that each component exerts (calculated in Step 7).

So for benzene:

$y_{benzene} = P_{partial}/P_{total} = 0.80/0.942 = 0.85$

where:

$y_{benzene}$ = mole fraction of benzene in the vapor

$P_{partial}$ = partial pressure of benzene in the vapor, psia

P_{total} = total vapor pressure of the mixture, psia

Similarly,

$y_{toluene}$ = 0.038/0.942 = 0.040

$y_{cyclohexane}$ = 0.104/0.942 = 0.110

The vapor phase mole fractions sum to 1.0.

9. Calculate molecular weight of the vapor. The molecular weight of the vapor depends upon the mole fractions of the components in the vapor.

$$M_V = \Sigma M_i y_i$$

where:

M_V = molecular weight of the vapor, lb/lb-mole

M_i = molecular weight of component i, lb/lb-mole

y_i = mole fraction of component i in the vapor, lb-mole/lb-mole

Component	M_i	y_i	$M_V = \Sigma(M_i)(y_i)$
Benzene	78.1	0.85	66.39
Toluene	92.1	0.040	3.68
Cyclohexane	84.2	0.110	9.26
Total		1.00	79.3

The molecular weight of the vapor is 79.3 lb/lb-mole.

10. Calculate weight fractions of the vapor. The weight fractions of the vapor are needed to calculate the amount (in pounds) of each component emitted from the tank. The weight fractions are related to the mole fractions calculated in Step 7 and total molecular weight calculated in Step 9:

$$Z_{V_i} = \frac{y_i M_i}{M_V}$$

$$Z_{V_1} = \frac{(0.85)(78.1)}{79.3} = 0.84 \text{ for benzene}$$

$$Z_{V_i} = \frac{(0.040)(92.1)}{79.3} = 0.04 \text{ for toluene}$$

$$Z_{V_1} = \frac{(0.110)(84.2)}{79.3} = 0.12 \text{ for cyclohexane}$$

11. Calculate total VOC emitted from the tank. The total VOC emitted from the tank is calculated using the equations identified in Step 3 and the parameters calculated in Steps 4 through 9.

$$L_T = L_{WD} + L_R + L_F$$

a. Calculate withdrawal losses:

$$L_{WD} = 0.943\ QCW_L/D$$

where:

$Q =$ 100,000 gal x 10 turnovers/yr (given)

$=$ 1,000,000 gal x 2.381 bbl/100 gal = 23,810 bbl/yr

$C =$ 0.0015 bbl/10^3 ft^2 (from Table 7.1-10)

$W_L =$ 1/[Σ (wt fraction in liquid)/(liquid component density from Table 7.1-3)]

Weight fractions

Benzene = 0.75 (given)
Toluene = 0.15 (given)
Cyclohexane = 0.10 (given)

Liquid densities

Benzene = 7.4 (see Table 7.1-3)
Toluene = 7.3 (see Table 7.1-3)
Cyclohexane = 6.5 (see Table 7.1-3)

$$W_L = 1/[(0.75/7.4) + (0.15/7.3) + (0.10/6.5)]$$

$$= 1/(0.101 + 0.0205 + 0.0154)$$

$$= 1/0.1369$$

$= 7.3$ lb/gal

$D = 20$ ft (given)

$L_{WD} = 0.943\ QCW_L/D$

$= [0.943(23{,}810)(0.0015)(7.3)/20]$

$= 12$ lb of VOC/yr from withdrawal losses

b. Calculate rim seal losses:

$$L_R = (K_{Ra} + K_{Rb}v^n)DP^*M_VK_C$$

where:

$K_{Ra} = 1.6$ (from Step 4)

$K_{Rb} = 0.3$ (from Step 4)

$v = 10.2$ mph (from Step 4)

$n = 1.6$ (from Step 4)

$K_C = 1$ (from Step 4)

$P_{VA} = 0.942$ psia (from Step 7) (formula from Step 3)

$D = 20$ ft

$P^* = (P_{VA}/P_A)/(1 + [1-(P_{VA}/P_A)]^{0.5})^2$

$= (0.942/14.7)/(1+[1-(0.942/14.7)]^{0.5})^2 = 0.017$

$M_V = 79.3$ lb/lb-mole (from Step 9)

$L_R = [(1.6 + (0.3)(10.2)^{1.6})](0.017)(20)(79.3)(1.0)$

$= 376$ lb of VOC/yr from rim seal losses

c. Calculate deck fitting losses:

$$L_F = F_FP^*M_VK_C$$

where:

$F_F = 134.5$ lb-mole/yr (from Step 4)

$P^* = 0.017$

M_V = 79.3 lb/lb-mole

K_C = 1.0 (from Step 4)

L_F = (134.5)(0.017)(79.3)(1.0)

= 181 lb/yr of VOC emitted from deck fitting losses

d. Calculate total losses:

$L_T = L_{WD} + L_R + L_F$

= 12 + 376 + 181

= 569 lb/yr of VOC emitted from tank

12. Calculate amount of each component emitted from the tank. For an external floating roof tank, the individual component losses are determined by Equation 4-2:

$$L_{Ti} = (Z_{V_i})(L_R + L_F) + (Z_{L_i})(L_{WD})$$

Therefore,

$L_{Tbenzene}$ = (0.84)(557) + (0.75)(12) = 477 lb/yr benzene

$L_{Ttoluene}$ = (0.040)(557) + (0.15)(12) = 24 lb/yr toluene

$L_{Tcyclohexane}$ = (0.12)(557) + (0.10)(12) = 68 lb/yr cyclohexane

Example 4 - Gasoline in an Internal Floating Roof Tank - Determine emissions of product from a 1 million gallon, internal floating roof tank containing gasoline (RVP 13). The tank is painted white and is located in Tulsa, Oklahoma. The annual number of turnovers for the tank is 50. The tank is 70 ft in diameter and 35 ft high and is equipped with a liquid-mounted primary seal plus a secondary seal. The tank has a column-supported fixed roof. The tank's deck is welded and equipped with the following: (1) two access hatches with unbolted, ungasketed covers; (2) an automatic gauge float well with an unbolted, ungasketed cover; (3) a pipe column well with a flexible fabric sleeve seal; (4) a sliding cover, gasketed ladder well; (5) adjustable deck legs; (6) a slotted sample pipe well with a gasketed sliding cover; and (7) a weighted, gasketed vacuum breaker.

Solution:

1. Determine tank type. The following information must be known about the tank in order to use the floating roof equations:

-- the number of columns
-- the effective column diameter
-- the rim seal description (vapor- or liquid-mounted, primary or secondary seal)
-- the deck fitting types and the deck seam length

Some of this information depends on specific construction details, which may not be known. In these instances, approximate values are provided for use.

2. Determine estimating methodology. Gasoline consists of many organic compounds, all of which are miscible in each other, which form a homogenous mixture. The tank emission rate will be based on the properties of RVP 13 gasoline. Since vapor pressure data have already been compiled, Raoult's Law will not be used. The molecular weight of gasoline also will be taken from a table and will not be calculated. Weight fractions of components will be assumed to be available from SPECIATE data base.

3. Select equations to be used.

$$L_T = L_{WD} + L_R + L_F + L_D \quad (2\text{-}1)$$

$$L_{WD} = \frac{(0.943)\ QCW_L}{D}\left[1 + \left(\frac{N_C F_C}{D}\right)\right] \quad (2\text{-}4)$$

$$L_R = (K_{Ra} + K_{Rb} v^n) D P^* M_V K_C \quad (2\text{-}2)$$

$$L_F = F_F P^* M_V K_C \quad (2\text{-}5)$$

$$L_D = K_D S_D D^2 P^* M_V K_C \quad (2\text{-}9)$$

where:

L_T = total loss, lb/yr

L_{WD} = withdrawal loss, lb/yr

L_R = rim seal loss, lb/yr

L_F = deck fitting loss, lb/yr

L_D = deck seam loss, lb/yr

Q = product average throughput (tank capacity [bbl] times turnovers per year), bbl/yr

C = product withdrawal shell clingage factor, bbl/1,000 ft^2

W_L = density of liquid, lb/gal

D = tank diameter, ft

N_C = number of columns, dimensionless

F_C = effective column diameter, ft

K_{Ra} = zero wind speed rim seal loss factor, lb-mole/ft·yr

K_{Rb} = wind speed dependent rim seal loss factor, lb-mole/$(mph)^n$ft·yr

v = average ambient site wind speed (zero for internal floating roof tanks), mph

M_V = the average molecular weight of the product vapor, lb/lb-mole

K_C = the product factor, dimensionless

P^* = the vapor pressure function, dimensionless

$$= (P_{VA}/P_A)/[1 + (1-([P_{VA}/P_A]))^{0.5})]^2$$

and

P_{VA} = the vapor pressure of the material stored, psia

P_A = average atmospheric pressure at tank location, psia

F_F = the total deck fitting loss factor, lb-mole/yr

$$= \sum_{i=1}^{n_f} (N_{F_i}K_{F_i}) = [(N_{F_1}K_{F_1}) + (N_{F_2}K_{F_2}) + \ldots + (N_{F_{nf}}K_{F_{nf}})]$$

and:

N_{F_i} = number of fittings of a particular type, dimensionless. N_{F_i} is determined for the specific tank or estimated from Table 7.1-12

K_{F_i} = deck fitting loss factor for a particular type of deck fitting, lb-mole/yr. K_{F_i} is determined for each fitting type using Table 7.1-12

n_f = number of different types of fittings, dimensionless

K_D = the deck seam loss factor, lb-mole/ft·yr

= 0.14 for nonwelded decks

= 0 for welded decks

S_D = deck seam length factor, ft/ft^2

= L_{seam}/A_{deck}

and:

L_{seam} = total length of deck seams, ft

A_{deck} = area of deck, ft^2 = $\pi D^2/4$

4. Identify parameters to be calculated or determined from tables. In this example, the following parameters are not specified: N_C, F_C, P, M_V, K_{Ra}, K_{Rb}, v, P^*, K_C, F_F, K_D, and S_D. The density of the liquid (W_L) and the vapor pressure of the liquid (P) can be read from tables and do not need to be calculated. Also, the weight fractions of components in the vapor can be obtained from speciation manuals. Therefore, several steps required in preceding examples will not be required in this example. In each case, if a step is not required, the reason is presented.

The following parameters can be obtained from tables or assumptions:

K_C = 1.0 for volatile organic liquids

N_C = 1 (from Table 7.1-11)

F_C = 1.0 (assumed)

K_{Ra} = 0.3 (from Table 7.1-8)

K_{Rb} = 0.6 (from Table 7.1-8)

v = 0 for internal floating roof tanks

M_V = 62 lb/lb-mole (from Table 7.1-2)

W_L = 5.6 lb/gal (from Table 7.1-2)

C = 0.0015 bbl/1,000 ft^2 (from Table 7.1-10)

K_D = 0 for welded decks so S_D is not needed

$F_F = \Sigma (K_{F_i} N_{F_i})$

5. Calculate mole fractions in the liquid. This step is not required because liquid mole fractions are only used to calculate liquid vapor pressure, which is given in this example.

6. Calculate the daily average liquid surface temperature. The daily average liquid surface temperature is equal to:

$$T_{LA} = 0.44\ T_{AA} + 0.56\ T_B + 0.0079\ \alpha\ I$$

$$T_{AA} = (T_{AX} + T_{AN})/2$$

$$T_B = T_{AA} + 6\alpha - 1$$

For Tulsa, Oklahoma (see Table 7.1-7):

$$T_{AX} = 71.3°F = 530.97°R$$

$$T_{AN} = 49.2°F = 508.87°R$$

$$I = 1{,}373 \text{ Btu/ft}^2\cdot\text{d}$$

From Table 7.1-6, $\alpha = 0.17$

Therefore,

$$T_{AA} = (530.97 + 508.87)/2 = 519.92°R$$

$$T_B = 519.92 + 6(0.17) - 1 = 519.94°R$$

$$T_{LA} = 0.44\ (519.92) + 0.56\ (519.94) + 0.0079(0.17)(1{,}373)$$

$$T_{LA} = 228.76 + 291.17 + 1.84$$

$$T_{LA} = 521.77°R \text{ or } 62°F$$

7. Calculate partial pressures and total vapor pressure of the liquid. The vapor pressure of gasoline RVP 13 can be interpolated from Table 7.1-2. The interpolated vapor pressure at 62°F is equal to 7.18 psia. Therefore,

$$P^* = \frac{P_{VA}/P_A}{[1 + (1 - [P_{VA}/P_A])^{0.5}]^2}$$

$$P^* = (7.18/14.7)/[1 + (1-(7.18/14.7))^{0.5}]^2$$

$$P^* = 0.166$$

8. Calculate mole fractions of components in the vapor. This step is not required because vapor mole fractions are needed to calculate the weight fractions and the molecular weight of the vapor, which are already specified.

9. Calculate molecular weight of the vapor. This step is not required because the molecular weight of gasoline vapor is already specified.

10. Calculate weight fractions of components of the vapor. The weight fractions of components in gasoline vapor can be obtained from a VOC speciation manual.

11. Calculate total VOC emitted from the tank. The total VOC emitted from the tank is calculated using the equations identified in Step 3 and the parameters specified in Step 4.

$$L_T = L_{WD} + L_R + L_F + L_D$$

a. Calculate withdrawal losses:

$$L_{WD} = [(0.943)QCW_L]/D\ [1 + (N_C F_C)/D]$$

where:

Q = (1,000,000 gal)(50 turnovers/yr)

= (50,000,000 gal)(2.381 bbl/100 gal) = 1,190,500 bbl/yr

C = 0.0015 bbl/1,000 ft^2

W_L = 5.6 lb/gal

D = 70 ft

N_C = 1

F_C = 1

L_{WD} = [(0.943)(1,190,500)(0.0015)(5.6)]/70[1 + (1)(1)/70] = 137 lb/yr VOC for withdrawal losses

b. Calculate rim seal losses:

$$L_R = (K_{Ra} + K_{Rb}v^n)DP^*M_V K_C$$

Since v = 0 for IFRT's:

$$L_R = K_{Ra}DP^*M_V K_C$$

where:

K_{Ra} = 0.3 lb-mole/ft·yr

D = 70 ft

P^* = 0.166

M_V = 62 lb/lb-mole

K_C = 1.0

L_R = (0.3)(0.166)(70)(62)(1.0) = 216 lb/yr VOC from rim seals

c. Calculate deck fitting losses:

$$L_F = F_F P^* M_V K_C$$

where:

$$F_F = \Sigma (K_{F_i} N_{F_i})$$

$K_{F_i} = K_{Fa_i}$ for internal floating roof tanks since the wind speed is zero (see Equation 2-8). Substituting values for K_{Fa_i} taken from Tables 7.1-12 and 7.1-15 for access hatches, gauge float well, pipe column well, ladder well, deck legs, sample pipe well, and vacuum breaker, respectively, yields:

$$F_F = (36)(2) + (14)(1) + (10)(1) + (56)(1) + 7.9[5 + (70/10) + (70^2/600)] + (43.1)(1) + (6.2)(1)$$

$$= 361 \text{ lb-mole/yr}$$

$$P^* = 0.166$$

$$M_V = 62 \text{ lb/lb-mole}$$

$$K_C = 1$$

$$L_F = (361)(0.166)(62)(1.0) = 3{,}715 \text{ lb/yr VOC from deck fittings}$$

d. Calculate deck seam losses:

$$L_D = K_D S_D D^2 P^* M_V K_C$$

Since $K_D = 0$ for IFRT's with welded decks,

$$L_D = 0 \text{ lb/yr VOC from deck seams}$$

e. Calculate total losses:

$$L_T = L_{WD} + L_R + L_F + L_D$$

$$= 137 + 216 + 3{,}715 + 0 = 4{,}068 \text{ lb/yr of VOC emitted from the tank}$$

12. Calculate amount of each component emitted from the tank. The individual component losses are equal to:

$$L_{T_i} = (Z_{V_i})(L_R + L_F + L_D) + (Z_{L_i})(L_{WD})$$

Since the liquid weight fractions are unknown, the individual component losses are calculated based on the vapor weight fraction and the total losses. This procedure should yield approximately the same values as the above equation because withdrawal losses are typically low for floating roof tanks. The amount of each component emitted is the weight fraction of that component in the vapor (obtained from a VOC species data manual and shown below) times the total amount of VOC emitted from the tank. The table below shows the amount emitted for each component in this example.

Constituent	Weight Percent In Vapor	Emissions, lb/yr
Air toxics		
Benzene	0.77	31.3
Toluene	0.66	26.8
Ethylbenzene	0.04	1.6
O-xylene	0.05	2.0
Nontoxics		
Isomers of pentane	26.78	1,089
N-butane	22.95	934
Iso-butane	9.83	400
N-pentane	8.56	348
Isomers of hexane	4.78	194
3-methyl pentane	2.34	95.2
Hexane	1.84	74.9
Others	21.40	871
Total	100	4,068

Source: SPECIATE Data Base Management System, Emission Factor and Inventory Group, U. S. Environmental Protection Agency, Research Triangle Park, NC, 1993.

References for Section 7.1

1. Laverman, R.J., *Emission Reduction Options For Floating Roof Tanks*, Chicago Bridge and Iron Technical Services Company, Presented at the Second International Symposium on Aboveground Storage Tanks, Houston, TX, January 1992.

2. *VOC Emissions From Volatile Organic Liquid Storage Tanks-Background Information For Proposed Standards*, EPA-450/3-81-003a, U. S. Environmental Protection Agency, Research Triangle Park, NC, July 1984.

3. *Evaporative Loss From External Floating Roof Tanks*, Third Edition, Bulletin No. 2517, American Petroleum Institute, Washington, DC, 1989.

4. *Evaporation Loss From Internal Floating Roof Tanks*, Third Edition, Bulletin No. 2519, American Petroleum Institute, Washington, DC, 1982.

5. *Manual Of Petroleum Measurement Standards: Chapter 19: Evaporative Loss Measurement, Section 2, Evaporative Loss From Floating Roof Tanks*, Preliminary Draft, American Petroleum Institute, Washington, DC, December 1994.

6. Ferry, R.L., *Estimating Storage Tank Emissions--Changes Are Coming*, TGB Partnership, 1994.

7. *Benzene Emissions From Benzene Storage Tanks-Background Information For Proposed Standards*, EPA-450/3-80-034a, U. S. Environmental Protection Agency, Research Triangle Park, NC, December 1980.

8. *Evaporative Loss From Fixed Roof Tanks*, Second Edition, Bulletin No. 2518, American Petroleum Institute, Washington, D.C., October 1991.

9. *Estimating Air Toxics Emissions From Organic Liquid Storage Tanks,* EPA-450/4-88-004, U. S. Environmental Protection Agency, Research Triangle Park, NC, October 1988.

10. Barnett, H.C., *et al.*, *Properties Of Aircraft Fuels*, NACA-TN 3276, Lewis Flight Propulsion Laboratory, Cleveland, OH, August 1956.

11. *Petrochemical Evaporation Loss From Storage Tanks*, First Edition, Bulletin No. 2523, American Petroleum Institute, Washington, D.C., 1969.

12. *SIMS Data Base Management System*, Version 2.0, U. S. Environmental Protection Agency, Research Triangle Park, NC, 1990.

13. *Comparative Climatic Data Through 1990*, National Oceanic and Atmospheric Administration, Asheville, NC, 1990.

14. *Input For Solar Systems*, U. S. Department of Commerce, National Oceanic and Atmospheric Administration, Environmental and Information Service, National Climatic Center, Asheville, NC, prepared for the U. S. Department of Energy, Division of Solar Technology, November 1978 (revised August 1979).

15. Ferry, R.L., *Documentation Of Rim Seal Loss Factors For The Manual Of Petroleum Measurement Standards: Chapter 19--Evaporative Loss Measurement: Section 2--Evaporative Loss From Floating Roof Tanks*, preliminary draft, American Petroleum Institute, April 5, 1995.

16. Written communication from R. Jones, et al., Midwest Research Institute, to D. Beauregard, U. S. Environmental Protection Agency, Final Fitting Loss Factors For Internal And External Floating Roof Tanks, May 24, 1995.

17. Written communication from A. Parker and R. Neulicht, Midwest Research Institute, to D. Beauregard, U. S. Environmental Protection Agency, Fitting Wind Speed Correction Factor For External Floating Roof Tanks, September 22, 1995.

18. *Use Of Variable Vapor Space Systems To Reduce Evaporation Loss*, Bulletin No. 2520, American Petroleum Institute, New York, NY, 1964.

19. Written communication from A. Parker, Midwest Research Institute, to D. Beauregard, U. S. Environmental Protection Agency, Final Deck Fitting Loss Factors for AP-42 Section 7.1, February 23, 1996.

20. Courtesy of R. Ferry, TGB Partnership, Hillsborough, NC.

8. INORGANIC CHEMICAL INDUSTRY

Possible emissions from the manufacture and use of inorganic chemicals and chemical products are high but, because of economic necessity, they are usually recovered. In some cases, the manufacturing operation is run as a closed system, allowing little or no emissions to escape to the atmosphere. Emission sources from chemical processes include heaters and boilers; valves, flanges, pumps, and compressors; storage and transfer of products and intermediates; waste water handling; and emergency vents.

The emissions that do reach the atmosphere from the inorganic chemical industry generally are gaseous and are controlled by adsorption or absorption. Particulate emissions also could be a problem, since the particulate emitted is usually extremely small, requiring very efficient treatment for removal.

Emissions data from chemical processes are sparse. It has been frequently necessary, therefore, to make estimates of emission factors on the basis of material balances, yields, or process similarities.

8.1 Synthetic Ammonia

8.1.1 General[1-2]

Synthetic ammonia (NH_3) refers to ammonia that has been synthesized (Standard Industrial Classification 2873) from natural gas. Natural gas molecules are reduced to carbon and hydrogen. The hydrogen is then purified and reacted with nitrogen to produce ammonia. Approximately 75 percent of the ammonia produced is used as fertilizer, either directly as ammonia or indirectly after synthesis as urea, ammonium nitrate, and monoammonium or diammonium phosphates. The remainder is used as raw material in the manufacture of polymeric resins, explosives, nitric acid, and other products.

Synthetic ammonia plants are located throughout the U. S. and Canada. Synthetic ammonia is produced in 25 states by 60 plants which have an estimated combined annual production capacity of 15.9 million megagrams (Mg) (17.5 million tons) in 1991. Ammonia plants are concentrated in areas with abundant supplies of natural gas. Seventy percent of U. S. capacity is located in Louisiana, Texas, Oklahoma, Iowa, and Nebraska.

8.1.2 Process Description[1,3-4]

Anhydrous ammonia is synthesized by reacting hydrogen with nitrogen at a molar ratio of 3 to 1, then compressing the gas and cooling it to -33°C (-27°F). Nitrogen is obtained from the air, while hydrogen is obtained from either the catalytic steam reforming of natural gas (methane [CH_4]) or naphtha, or the electrolysis of brine at chlorine plants. In the U. S., about 98 percent of synthetic ammonia is produced by catalytic steam reforming of natural gas. Figure 8.1-1 shows a general process flow diagram of a typical ammonia plant.

Six process steps are required to produce synthetic ammonia using the catalytic steam reforming method: (1) natural gas desulfurization, (2) catalytic steam reforming, (3) carbon monoxide (CO) shift, (4) carbon dioxide (CO_2) removal, (5) methanation, and (6) ammonia synthesis. The first, third, fourth, and fifth steps remove impurities such as sulfur, CO, CO_2 and water (H_2O) from the feedstock, hydrogen, and synthesis gas streams. In the second step, hydrogen is manufactured and nitrogen (air) is introduced into this 2-stage process. The sixth step produces anhydrous ammonia from the synthetic gas. While all ammonia plants use this basic process, details such as operating pressures, temperatures, and quantities of feedstock vary from plant to plant.

8.1.2.1 Natural Gas Desulfurization -

In this step, the sulfur content (as hydrogen sulfide [H_2S]) in natural gas is reduced to below 280 micrograms per cubic meter ($\mu g/m^3$) (122 grams per cubic feet) to prevent poisoning of the nickel catalyst in the primary reformer. Desulfurization can be accomplished by using either activated carbon or zinc oxide. Over 95 percent of the ammonia plants in the U. S. use activated carbon fortified with metallic oxide additives for feedstock desulfurization. The remaining plants use a tank filled with zinc oxide for desulfurization. Heavy hydrocarbons can decrease the effectiveness of an activated carbon bed. This carbon bed also has another disadvantage in that it cannot remove carbonyl sulfide. Regeneration of carbon is accomplished by passing superheated steam through the carbon bed. A zinc oxide bed offers several advantages over the activated carbon bed. Steam regeneration to use as energy is not required when using a zinc oxide bed. No air emissions are created by the zinc oxide bed, and

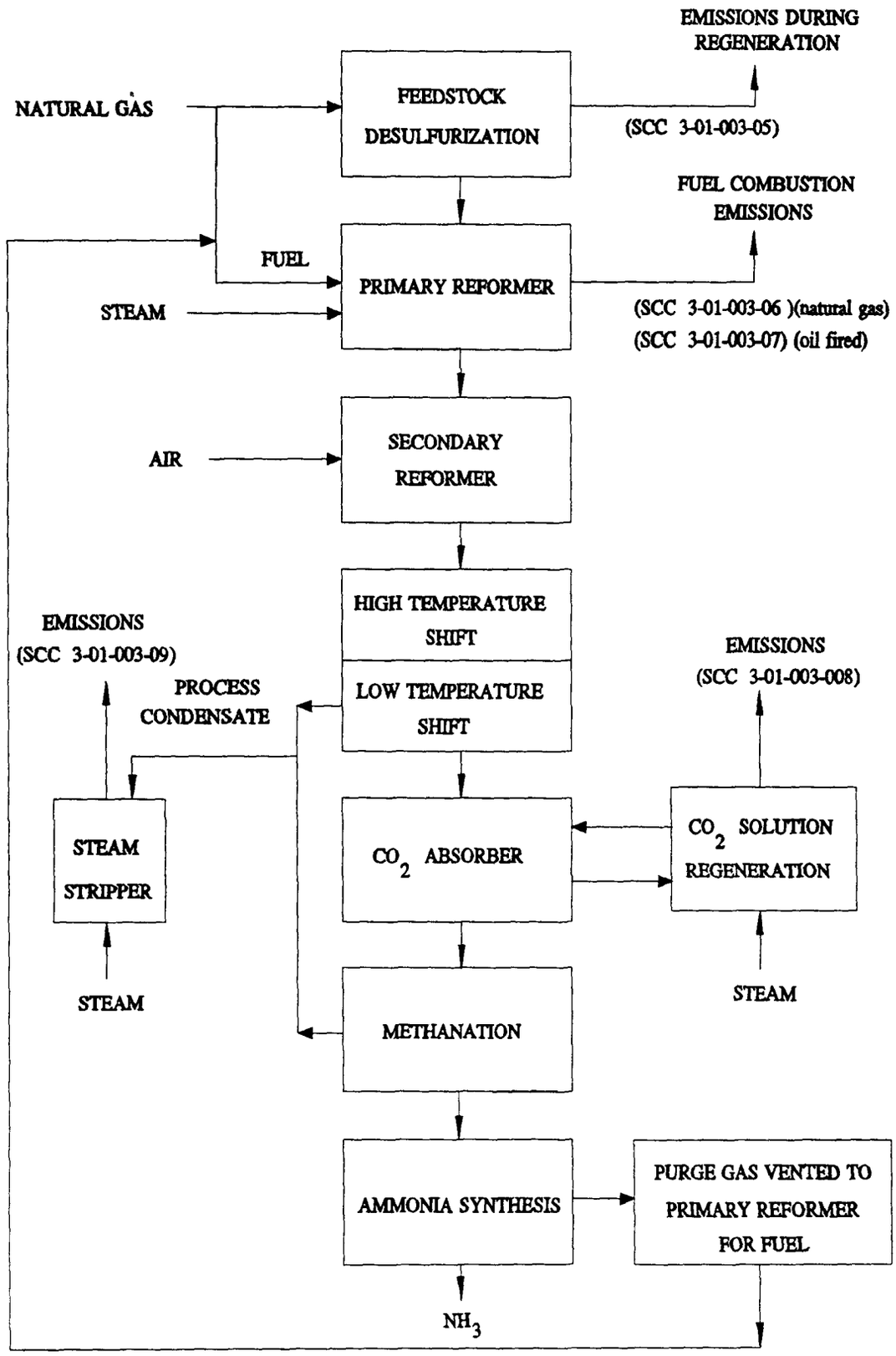

Figure 8.1-1. General flow diagram of a typical ammonia plant.
(Source Classification Codes in parentheses.)

the higher molecular weight hydrocarbons are not removed. Therefore, the heating value of the natural gas is not reduced.

8.1.2.2 Catalytic Steam Reforming -

Natural gas leaving the desulfurization tank is mixed with process steam and preheated to 540°C (1004°F). The mixture of steam and gas enters the primary reformer (natural gas fired primary reformer) and oil fired primary reformer tubes, which are filled with a nickel-based reforming catalyst. Approximately 70 percent of the CH_4 is converted to hydrogen and CO_2. An additional amount of CH_4 is converted to CO. This process gas is then sent to the secondary reformer, where it is mixed with compressed air that has been preheated to about 540°C (1004°F). Sufficient air is added to produce a final synthesis gas having a hydrogen-to-nitrogen mole ratio of 3 to 1. The gas leaving the secondary reformer is then cooled to 360°C (680°F) in a waste heat boiler.

8.1.2.3 Carbon Monoxide Shift -

After cooling, the secondary reformer effluent gas enters a high temperature CO shift converter which is filled with chromium oxide initiator and iron oxide catalyst. The following reaction takes place in the carbon monoxide converter:

$$CO + H_2O \rightarrow CO_2 + H_2 \qquad (1)$$

The exit gas is then cooled in a heat exchanger. In some plants, the gas is passed through a bed of zinc oxide to remove any residual sulfur contaminants that would poison the low-temperature shift catalyst. In other plants, excess low-temperature shift catalyst is added to ensure that the unit will operate as expected. The low-temperature shift converter is filled with a copper oxide/zinc oxide catalyst. Final shift gas from this converter is cooled from 210 to 110°C (410 to 230°F) and enters the bottom of the carbon dioxide absorption system. Unreacted steam is condensed and separated from the gas in a knockout drum. This condensed steam (process condensate) contains ammonium carbonate ($[(NH_4)_2 CO_3 \bullet H_2O]$) from the high-temperature shift converter, methanol (CH_3OH) from the low-temperature shift converter, and small amounts of sodium, iron, copper, zinc, aluminum and calcium.

Process condensate is sent to the stripper to remove volatile gases such as ammonia, methanol, and carbon dioxide. Trace metals remaining in the process condensate are removed by the ion exchange unit.

8.1.2.4 Carbon Dioxide Removal -

In this step, CO_2 in the final shift gas is removed. CO_2 removal can be done by using 2 methods: monoethanolamine ($C_2H_4NH_2OH$) scrubbing and hot potassium scrubbing. Approximately 80 percent of the ammonia plants use monoethanolamine (MEA) to aid in removing CO_2. The CO_2 gas is passed upward through an adsorption tower countercurrent to a 15 to 30 percent solution of MEA in water fortified with effective corrosion inhibitors. After absorbing the CO_2, the amine solution is preheated and regenerated (carbon dioxide regenerator) in a reactivating tower. This reacting tower removes CO_2 by steam stripping and then by heating. The CO_2 gas (98.5 percent CO_2) is either vented to the atmosphere or used for chemical feedstock in other parts of the plant complex. The regenerated MEA is pumped back to the absorber tower after being cooled in a heat exchanger and solution cooler.

8.1.2.5 Methanation -

Residual CO_2 in the synthesis gas is removed by catalytic methanation which is conducted over a nickel catalyst at temperatures of 400 to 600°C (752 to 1112°F) and pressures up to 3,000 kilopascals (kPa) (435 pounds per square inch absolute [psia]) according to the following reactions:

$$CO + 3H_2 \rightarrow CH_4 + H_2O \quad (2)$$

$$CO_2 + H_2 \rightarrow CO + H_2O \quad (3)$$

$$CO_2 + 4H_2 \rightarrow CH_4 + 2H_2O \quad (4)$$

Exit gas from the methanator, which has a 3:1 mole ratio of hydrogen and nitrogen, is then cooled to 38°C (100°F).

8.1.2.6 Ammonia Synthesis -

In the synthesis step, the synthesis gas from the methanator is compressed at pressures ranging from 13,800 to 34,500 kPa (2000 to 5000 psia), mixed with recycled synthesis gas, and cooled to 0°C (32°F). Condensed ammonia is separated from the unconverted synthesis gas in a liquid-vapor separator and sent to a let-down separator. The unconverted synthesis is compressed and preheated to 180°C (356°F) before entering the synthesis converter which contains iron oxide catalyst. Ammonia from the exit gas is condensed and separated, then sent to the let-down separator. A small portion of the overhead gas is purged to prevent the buildup of inert gases such as argon in the circulating gas system.

Ammonia in the let-down separator is flashed to 100 kPa (14.5 psia) at -33°C (-27°F) to remove impurities from the liquid. The flash vapor is condensed in the let-down chiller where anhydrous ammonia is drawn off and stored at low temperature.

8.1.3 Emissions And Controls[1,3]

Pollutants from the manufacture of synthetic anhydrous ammonia are emitted from 4 process steps: (1) regeneration of the desulfurization bed, (2) heating of the catalytic steam, (3) regeneration of carbon dioxide scrubbing solution, and (4) steam stripping of process condensate.

More than 95 percent of the ammonia plants in the U. S. use activated carbon fortified with metallic oxide additives for feedstock desulfurization. The desulfurization bed must be regenerated about once every 30 days for an average period of 8 to 10 hours. Vented regeneration steam contains sulfur oxides (SO_x) and H_2S, depending on the amount of oxygen in the steam. Regeneration also emits hydrocarbons and CO. The reformer, heated with natural gas or fuel oil, emits combustion products such as oxides of nitrogen, CO, CO_2, SO_x, hydrocarbons, and particulates. Emission factors for the reformer may be estimated using factors presented in the appropriate section in Chapter 1, "External Combustion Source". Table 8.1-1 presents uncontrolled emission factors for a typical ammonia plant.

CO_2 is removed from the synthesis gas by scrubbing with MEA or hot potassium carbonate solution. Regeneration of this CO_2 scrubbing solution with steam produces emission of water, NH_3, CO, CO_2, and MEA.

Cooling the synthesis gas after low temperature shift conversion forms a condensate containing NH_3, CO_2, CH_3OH, and trace metals. Condensate steam strippers are used to remove NH_3 and methanol from the water, and steam from this is vented to the atmosphere, emitting NH_3, CO_2, and CH_3OH.

Table 8.1-1 (Metric And English Units). UNCONTROLLED EMISSION FACTORS FOR A TYPICAL AMMONIA PLANT[a]

EMISSION FACTOR RATING: E

Emission Point	CO		SO_2		Total Organic Compounds		NH_3		CO_2	
	kg/Mg	lb/ton	kg/Mg	lb/ton	kg/Mg	lb/ton	kg/Mg	lb/ton	kg/Mg	lb/ton
Desulfurization unit regeneration[b] (SCC 3-01-003-05)	6.9	13.8	0.0288[c,d]	0.0576[c,d]	3.6	7.2	NA	NA	ND	ND
Carbon dioxide regenerator (SCC 3-01-003-008)	1.0[e]	2.0[e]	NA	NA	0.52[f]	1.04	1.0	2.0	1220	2440
Condensate steam stripper (SCC 3-01-003-09)	NA	NA	NA	NA	0.6[g]	1.2	1.1	2.2	3.4[h]	6.8[h]

[a] References 1,3. SCC = Source Classification Code. NA = not applicable. ND = no data.
[b] Intermittent emissions. Desulfurization tank is regenerated for a 10-hour period on average once every 30 days.
[c] Assumed worst case, that all sulfur entering tank is emitted during regeneration.
[d] Normalized to a 24-hour emission factor. Total sulfur is 0.0096 kg/Mg (0.019 lb/ton).
[e] Mostly CO.
[f] 0.05 kg/Mg (0.1 lb/ton) is monoethanolamine.
[g] Mostly methanol, which is classified as Non Methane Organic Compound and a hazardous air pollutant.
[h] $\pm 60\%$.

Some processes have been modified to reduce emissions and to improve utility of raw materials and energy. One such technique is the injection of the overheads into the reformer stack along with the combustion gases to eliminate emissions from the condensate steam stripper.

References For Section 8.1

1. *Source Category Survey: Ammonia Manufacturing Industry*, EPA-450/3-80-014, U. S. Environmental Protection Agency, Research Triangle Park, NC, August 1980.

2. *North American Fertilizer Capacity Data*, Tennessee Valley Authority, Muscle Shoals, AL, December 1991.

3. G. D. Rawlings and R. B. Reznik, *Source Assessment: Synthetic Ammonia Production*, EPA-600/2-77-107m, U. S. Environmental Protection Agency, Cincinnati, OH, November 1977.

4. *AIRS Facility Subsystem Source Classification Codes And Emission Factor Listing For Criteria Pollutants*, EPA-450/4-90-003, U. S. Environmental Protection Agency, Research Triangle Park, NC, March 1990.

8.2 Urea

8.2.1 General[1-13]

Urea [$CO(NH_2)_2$], also known as carbamide or carbonyl diamide, is marketed as a solution or in solid form. Most urea solution produced is used in fertilizer mixtures, with a small amount going to animal feed supplements. Most solids are produced as prills or granules, for use as fertilizer or protein supplement in animal feed, and in plastics manufacturing. Five U. S. plants produce solid urea in crystalline form. About 7.3 million megagrams (Mg) (8 million tons) of urea were produced in the U. S. in 1991. About 85 percent was used in fertilizers (both solid and solution forms), 3 percent in animal feed supplements, and the remaining 12 percent in plastics and other uses.

8.2.2 Process Description[1-2]

The process for manufacturing urea involves a combination of up to 7 major unit operations. These operations, illustrated by the flow diagram in Figure 8.2-1, are solution synthesis, solution concentration, solids formation, solids cooling, solids screening, solids coating and bagging, and/or bulk shipping.

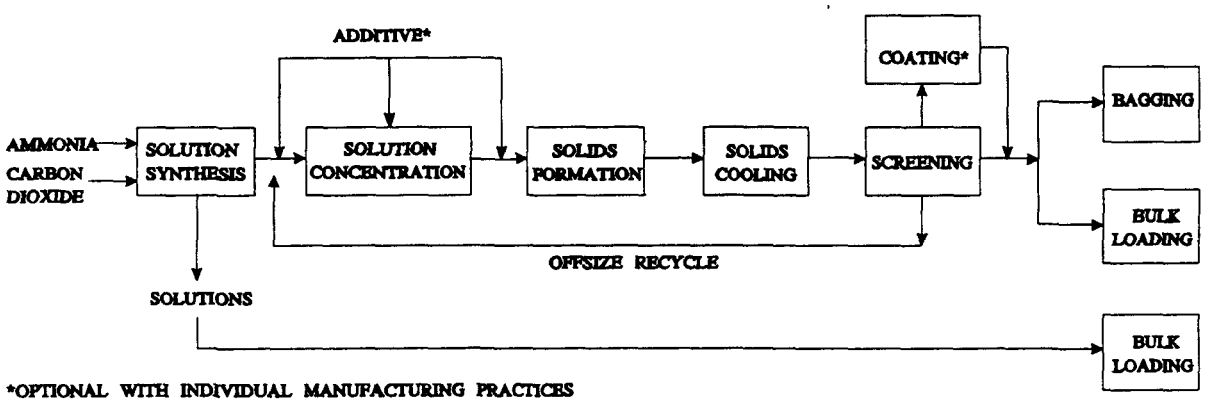

Figure 8.2-1. Major area manufacturing operations.

The combination of processing steps is determined by the desired end products. For example, plants producing urea solution use only the solution formulation and bulk shipping operations. Facilities producing solid urea employ these 2 operations and various combinations of the remaining 5 operations, depending upon the specific end product being produced.

In the solution synthesis operation, ammonia (NH_3) and carbon dioxide (CO_2) are reacted to form ammonium carbamate ($NH_2CO_2NH_4$). Typical operating conditions include temperatures from 180 to 200°C (356 to 392°F), pressures from 140 to 250 atmospheres (14,185 to 25,331 kilopascals) NH_3:CO_2 molar ratios from 3:1 to 4:1, and a retention time of 20 to 30 minutes. The carbamate is then dehydrated to yield 70 to 77 percent aqueous urea solution. These reactions are as follows:

$$2NH_3 + CO_2 \rightarrow NH_2CO_2NH_4 \quad (1)$$

$$NH_2CO_2NH_4 \rightarrow NH_2CONH_2 + H_2O \quad (2)$$

The urea solution can be used as an ingredient of nitrogen solution fertilizers, or it can be concentrated further to produce solid urea.

The 3 methods of concentrating the urea solution are vacuum concentration, crystallization, and atmospheric evaporation. The method chosen depends upon the level of biuret ($NH_2CONHCONH_2$) impurity allowable in the end product. Aqueous urea solution begins to decompose at 60°C (140°F) to biuret and ammonia. The most common method of solution concentration is evaporation.

The concentration process furnishes urea "melt" for solids formation. Urea solids are produced from the urea melt by 2 basic methods: prilling and granulation. Prilling is a process by which solid particles are produced from molten urea. Molten urea is sprayed from the top of a prill tower. As the droplets fall through a countercurrent air flow, they cool and solidify into nearly spherical particles. There are 2 types of prill towers: fluidized bed and nonfluidized bed. The major difference is that a separate solids cooling operation may be required to produce agricultural grade prills in a nonfluidized bed prill tower.

Granulation is used more frequently than prilling in producing solid urea for fertilizer. Granular urea is generally stronger than prilled urea, both in crushing strength and abrasion resistance. There are 2 granulation methods: drum granulation and pan granulation. In drum granulation, solids are built up in layers on seed granules placed in a rotating drum granulator/cooler approximately 4.3 meters (14 feet) in diameter. Pan granulators also form the product in a layering process, but different equipment is used and pan granulators are not commonly used in the U. S.

The solids cooling operation is generally accomplished during solids formation, but for pan granulation processes and for some agricultural grade prills, some supplementary cooling is provided by auxiliary rotary drums.

The solids screening operation removes offsize product from solid urea. The offsize material may be returned to the process in the solid phase or be redissolved in water and returned to the solution concentration process.

Clay coatings are used in the urea industry to reduce product caking and urea dust formation. The coating also reduces the nitrogen content of the product. The use of clay coating has diminished considerably, being replaced by injection of formaldehyde additives into the liquid or molten urea before solids formation. Formaldehyde reacts with urea to from methylenediurea, which is the conditioning agent. Additives reduce solids caking during storage and urea dust formation during transport and handling.

The majority of solid urea product is bulk shipped in trucks, enclosed railroad cars, or barges, but approximately 10 percent is bagged.

8.2.3 Emissions And Controls[1,3-7]

Emissions from urea manufacture are mainly ammonia and particulate matter. Formaldehyde and methanol, hazardous air pollutants, may be emitted if additives are used. Formalin™, used as a formaldehyde additive, may contain up to 15 percent methanol. Ammonia is emitted during the solution synthesis and solids production processes. Particulate matter is emitted during all urea processes. There have been no reliable measurements of free gaseous formaldehyde emissions. The

chromotropic acid procedure that has been used to measure formaldehyde is not capable of distinguishing between gaseous formaldehyde and methylenediurea, the principle compound formed when the formaldehyde additive reacts with hot urea.

Table 8.2-1 summarizes the uncontrolled and controlled emission factors, by processes, for urea manufacture. Factors are expressed in units of kilograms per megagram (kg/Mg) and pounds per ton (lb/ton). Table 8.2-2 summarizes particle sizes for these emissions. Units are expressed in terms of micrometers (μm).

In the synthesis process, some emission control is inherent in the recycle process where carbamate gases and/or liquids are recovered and recycled. Typical emission sources from the solution synthesis process are noncondensable vent streams from ammonium carbamate decomposers and separators. Emissions from synthesis processes are generally combined with emissions from the solution concentration process and are vented through a common stack. Combined particulate emissions from urea synthesis and concentration operations are small compared to particulate emissions from a typical solids-producing urea plant. The synthesis and concentration operations are usually uncontrolled except for recycle provisions to recover ammonia. For these reasons, no factor for controlled emissions from synthesis and concentration processes is given in this section.

Uncontrolled emission rates from prill towers may be affected by the following factors: (1) product grade being produced, (2) air flow rate through the tower, (3) type of tower bed, and (4) ambient temperature and humidity.

The total of mass emissions per unit is usually lower for feed grade prill production than for agricultural grade prills, due to lower airflows. Uncontrolled particulate emission rates for fluidized bed prill towers are higher than those for nonfluidized bed prill towers making agricultural grade prills, and are approximately equal to those for nonfluidized bed feed grade prills. Ambient air conditions can affect prill tower emissions. Available data indicate that colder temperatures promote the formation of smaller particles in the prill tower exhaust. Since smaller particles are more difficult to remove, the efficiency of prill tower control devices tends to decrease with ambient temperatures. This can lead to higher emission levels for prill towers operated during cold weather. Ambient humidity can also affect prill tower emissions. Air flow rates must be increased with high humidity, and higher air flow rates usually cause higher emissions.

The design parameters of drum granulators and rotary drum coolers may affect emissions. Drum granulators have an advantage over prill towers in that they are capable of producing very large particles without difficulty. Granulators also require less air for operation than do prill towers. A disadvantage of granulators is their inability to produce the smaller feed grade granules economically. To produce smaller granules, the drum must be operated at a higher seed particle recycle rate. It has been reported that, although the increase in seed material results in a lower bed temperature, the corresponding increase in fines in the granulator causes a higher emission rate. Cooling air passing through the drum granulator entrains approximately 10 to 20 percent of the product. This air stream is controlled with a wet scrubber which is standard process equipment on drum granulators.

In the solids screening process, dust is generated by abrasion of urea particles and the vibration of the screening mechanisms. Therefore, almost all screening operations used in the urea manufacturing industry are enclosed or are covered over the uppermost screen. This operation is a small emission source; therefore particulate emission factors from solids screening are not presented.

Emissions attributable to coating include entrained clay dust from loading, inplant transfer, and leaks from the seals of the coater. No emissions data are available to quantify this fugitive dust source.

Table 8.2-1 (Metric And English Units). EMISSION FACTORS FOR UREA PRODUCTION

EMISSON FACTOR RATING: A (except as noted)

Type Of Operation	Particulate[a]				Ammonia			
	Uncontrolled		Controlled		Uncontrolled		Controlled[b]	
	kg/Mg Of Product	lb/ton Of Product	kg/Mg Of Product	lb/ton Of Product	kg/Mg Of Product	lb/ton Of Product	kg/Mg Of Product	lb/ton Of Product
Solution formation and concentration[c]	0.0105[d]	0.021[d]	ND	ND	9.23[e]	18.46[e]	ND	ND
Nonfluidized bed prilling								
Agricultural grade[f]	1.9	3.8	0.032[g]	0.063[g]	0.43	0.87	ND	ND
Feed grade[h]	1.8	3.6	ND	ND	ND	ND	ND	ND
Fluidized bed prilling								
Agricultural grade[h]	3.1	6.2	0.39	0.78	1.46	2.91	ND	ND
Feed grade[h]	1.8	3.6	0.24	0.48	2.07	4.14	1.04	2.08
Drum granulation[j]	120	241	0.115	0.234	1.07[k]	2.15[k]	ND	ND
Rotary drum cooler	3.89[m]	7.78[m]	0.10[n]	0.20[n]	0.0256[m]	0.051[m]	ND	ND
Bagging	0.095[n]	0.19[n]	ND	ND	NA	NA	NA	NA

[a] Particulate test data were collected using a modification of EPA Reference Method 3. Reference 1, Appendix B explains these modifications. ND = no data. NA = not applicable.

[b] No ammonia control demonstrated by scrubbers installed for particulate control. Some increase in ammonia emissions exiting the control device was noted.

[c] References 9,11. Emissions from the synthesis process are generally combined with emissions from the solution concentration process and vented through a common stack. In the synthesis process, some emission control is inherent in the recycle process where carbamate gases and/or liquids are recovered and recycled.

[d] EPA test data indicated a range of 0.005 to 0.016 kg/Mg (0.010 to 0.032 lb/ton).

[e] EPA test data indicated a range of 4.01 to 14.45 kg/Mg (8.02 to 28.90 lb/ton).

[f] Reference 12. These factors were determined at an ambient temperature of 14 to 21°C (57 to 69°F). The controlled emission factors are based on ducting exhaust through a downcomer and then a wetted fiber filter scrubber achieving a 98.3% efficiency. This represents a higher degree of control than is typical in this industry.

[g] Only runs 2 and 3 were used (test Series A).

[h] Reference 11. Feed grade factors were determined at an ambient temperature of 29°C (85°F) and agricultural grade factors at an ambient temperature of 27°C (80°F). For fluidized bed prilling, controlled emission factors are based on use of an entrainment scrubber.

[j] References 8-9. Controlled emission factors are based on use of a wet entrainment scrubber. Wet scrubbers are standard process equipment on drum granulators. Uncontrolled emissions were measured at the scrubber inlet.

[k] EPA test data indicated a range of 0.955 to 1.20 kg/Mg (1.90 to 2.45 lb/ton).

[m] Reference 10.

[n] Reference 1. EMISSION FACTOR RATING: E. Data were provided by industry.

Table 8.2-2 (Metric Units). *UNCONTROLLED PARTICLE SIZE DATA FOR UREA PRODUCTION*

Type Of Operation	Particle Size (cumulative weight %)		
	≤ 10 μm	≤ 5 μm	≤ 2.5 μm
Solid Formation			
Nonfluidized bed prilling			
Agricultural grade	90	84	79
Feed grade	85	74	50
Fluidized bed prilling			
Agricultural grade	60	52	43
Feed grade	24	18	14
Drum granulation	—[a]	—[a]	—[a]
Rotary drum cooler	0.70	0.15	0.04

[a] All particulate matter ≥ 5.7 μm was collected in the cyclone precollector sampling equipment.

Bagging operations are sources of particulate emissions. Dust is emitted from each bagging method during the final stages of filling, when dust-laden air is displaced from the bag by urea. Bagging operations are conducted inside warehouses and are usually vented to keep dust out of the workroom area, as mandated by Occupational Safety and Health Administration (OSHA) regulations. Most vents are controlled with baghouses. Nationwide, approximately 90 percent of urea produced is bulk loaded. Few plants control their bulk loading operations. Generation of visible fugitive particles is negligible.

Urea manufacturers presently control particulate matter emissions from prill towers, coolers, granulators, and bagging operations. With the exception of bagging operations, urea emission sources are usually controlled with wet scrubbers. Scrubber systems are preferred over dry collection systems primarily for the easy recycling of dissolved urea collected in the device. Scrubber liquors are recycled to the solution concentration process to eliminate waste disposal problems and to recover the urea collected.

Fabric filters (baghouses) are used to control fugitive dust from bagging operations, where humidities are low and binding of the bags is not a problem. However, many bagging operations are uncontrolled.

References For Section 8.2

1. *Urea Manufacturing Industry: Technical Document*, EPA-450/3-81-001, U. S. Environmental Protection Agency, Research Triangle Park, NC, January 1981.

2. D. F. Bress and M. W. Packbier, "The Startup Of Two Major Urea Plants", *Chemical Engineering Progress*, May 1977.

3. Written communication from Gary McAlister, U. S. Environmental Protection Agency, Research Triangle Park, NC, to Eric Noble, U. S. Environmental Protection Agency, Research Triangle Park, NC, July 28, 1983.

4. *Formaldehyde Use In Urea-Based Fertilizers*, Report Of The Fertilizer Institute's Formaldehyde Task Group, The Fertilizer Institute, Washington, DC, February 4, 1983.

5. J. H. Cramer, "Urea Prill Tower Control Meeting 20% Opacity". Presented at the Fertilizer Institute Environment Symposium, New Orleans, LA, April 1980.

6. Written communication from M. I. Bornstein, GCA Corporation, Bedford, MA, to E. A. Noble, U. S. Environmental Protection Agency, Research Triangle Park, NC, August 2, 1978.

7. Written communication from M. I. Bornstein and S. V. Capone, GCA Corporation, Bedford, MA, to E. A. Noble, U. S. Environmental Protection Agency, Research Triangle Park, NC, June 23, 1978.

8. *Urea Manufacture: Agrico Chemical Company Emission Test Report*, EMB Report 78-NHF-4, U. S. Environmental Protection Agency, Research Triangle Park, NC, April 1979.

9. *Urea Manufacture: CF Industries Emission Test Report*, EMB Report 78-NHF-8, U. S. Environmental Protection Agency, Research Triangle Park, NC, May 1979.

10. *Urea Manufacture: Union Oil Of California Emission Test Report*, EMB Report 80-NHF-15, U. S. Environmental Protection Agency, Research Triangle Park, NC, September 1980.

11. *Urea Manufacture: W. R. Grace And Company Emission Test Report*, EMB Report 80-NHF-3, U. S. Environmental Protection Agency, Research Triangle Park, NC, December 1979.

12. *Urea Manufacture: Reichhold Chemicals Emission Test Report*, EMB Report 80-NHF-14, U. S. Environmental Protection Agency, Research Triangle Park, NC, August 1980.

13. *North American Fertilizer Capacity Data*, Tennessee Valley Authority, Muscle Shoals, AL, December 1991.

8.3 Ammonium Nitrate

8.3.1 General[1-3]

Ammonium nitrate (NH_4NO_3) is produced by neutralizing nitric acid (HNO_3) with ammonia (NH_3). In 1991, there were 58 U. S. ammonium nitrate plants located in 22 states producing about 8.2 million megagrams (Mg) (9 million tons) of ammonium nitrate. Approximately 15 to 20 percent of this amount was used for explosives and the balance for fertilizer.

Ammonium nitrate is marketed in several forms, depending upon its use. Liquid ammonium nitrate may be sold as a fertilizer, generally in combination with urea. Liquid ammonium nitrate may be concentrated to form an ammonium nitrate "melt" for use in solids formation processes. Solid ammonium nitrate may be produced in the form of prills, grains, granules, or crystals. Prills can be produced in either high or low density form, depending on the concentration of the melt. High density prills, granules, and crystals are used as fertilizer, grains are used solely in explosives, and low density prills can be used as either.

8.3.2 *Process Description*[1,2]

The manufacture of ammonium nitrate involves several major unit operations including solution formation and concentration; solids formation, finishing, screening, and coating; and product bagging and/or bulk shipping. In some cases, solutions may be blended for marketing as liquid fertilizers. These operations are shown schematically in Figure 8.3-1.

The number of operating steps employed depends on the end product desired. For example, plants producing ammonium nitrate solutions alone use only the solution formation, solution blending, and bulk shipping operations. Plants producing a solid ammonium nitrate product may employ all of the operations.

All ammonium nitrate plants produce an aqueous ammonium nitrate solution through the reaction of ammonia and nitric acid in a neutralizer as follows:

$$NH_3 + HNO_3 \rightarrow NH_4NO_3$$

Approximately 60 percent of the ammonium nitrate produced in the U. S. is sold as a solid product. To produce a solid product, the ammonium nitrate solution is concentrated in an evaporator or concentrator. The resulting "melt" contains about 95 to 99.8 percent ammonium nitrate at approximately 149°C (300°F). This melt is then used to make solid ammonium nitrate products.

Prilling and granulation are the most common processes used to produce solid ammonium nitrate. To produce prills, concentrated melt is sprayed into the top of a prill tower. In the tower, ammonium nitrate droplets fall countercurrent to a rising air stream that cools and solidifies the falling droplets into spherical prills. Prill density can be varied by using different concentrations of ammonium nitrate melt. Low density prills, in the range of 1.29 specific gravity, are formed from a 95 to 97.5 percent ammonium nitrate melt, and high density prills, in the range of 1.65 specific gravity, are formed from a 99.5 to 99.8 percent melt. Low density prills are more porous than high density prills. Therefore, low density prills are used for making blasting agents because they will absorb oil. Most high density prills are used as fertilizers.

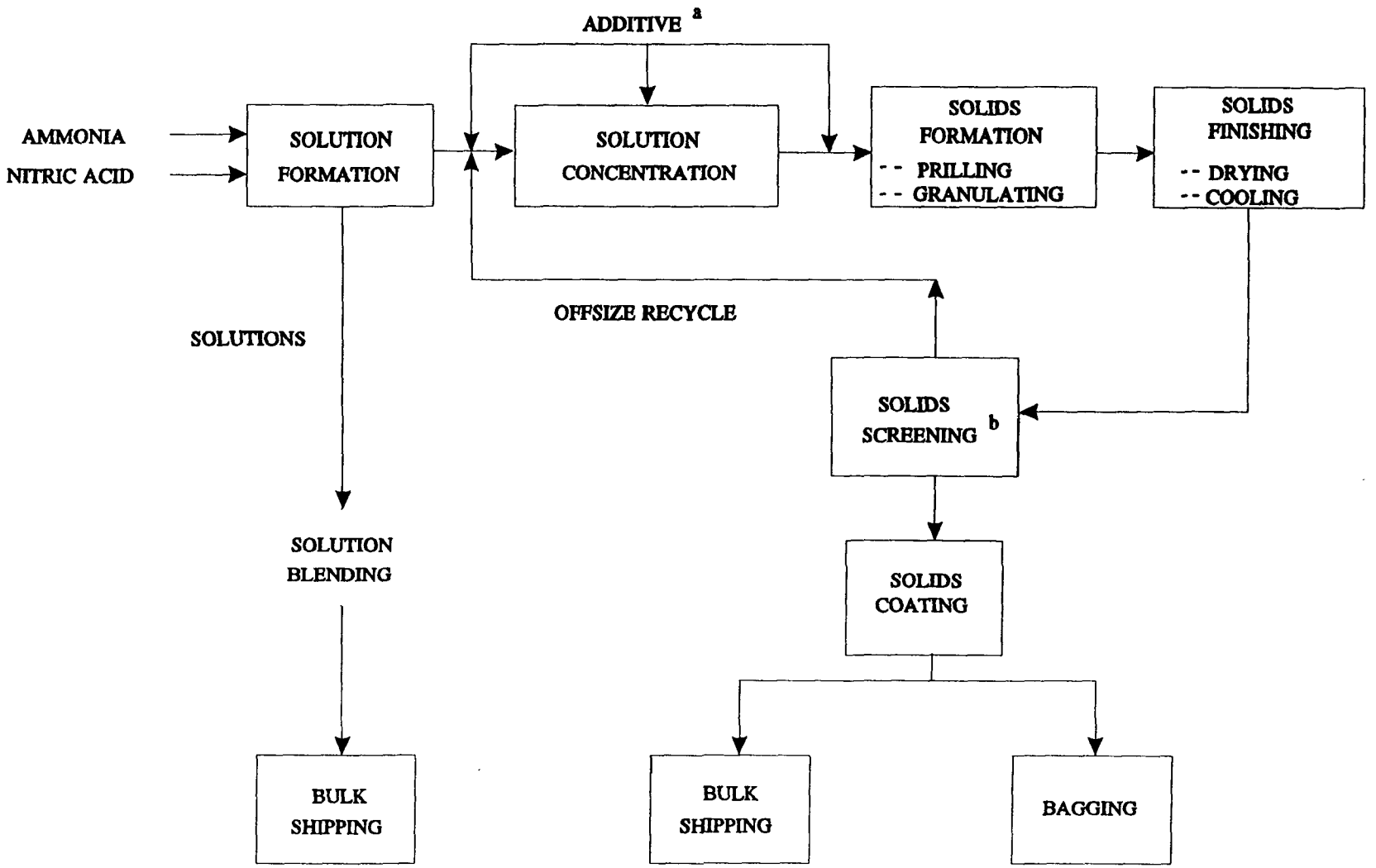

a ADDITIVE MAY BE ADDED BEFORE, DURING, OR AFTER CONCENTRATION
b SCREENING MAY BE PERFORMED BEFORE OR AFTER SOLIDS FINISHING

Figure 8.3-1. Ammonium nitrate manufacturing operations.

Rotary drum granulators produce granules by spraying a concentrated ammonium nitrate melt (99.0 to 99.8 percent) onto small seed particles of ammonium nitrate in a long rotating cylindrical drum. As the seed particles rotate in the drum, successive layers of ammonium nitrate are added to the particles, forming granules. Granules are removed from the granulator and screened. Offsize granules are crushed and recycled to the granulator to supply additional seed particles or are dissolved and returned to the solution process. Pan granulators operate on the same principle as drum granulators, except the solids are formed in a large, rotating circular pan. Pan granulators produce a solid product with physical characteristics similar to those of drum granules.

Although not widely used, an additive such as magnesium nitrate or magnesium oxide may be injected directly into the melt stream. This additive serves 3 purposes: to raise the crystalline transition temperature of the final solid product; to act as a desiccant, drawing water into the final product to reduce caking; and to allow solidification to occur at a low temperature by reducing the freezing point of molten ammonium nitrate.

The temperature of the ammonium nitrate product exiting the solids formation process is approximately 66 to 124°C (150 to 255°F). Rotary drum or fluidized bed cooling prevents deterioration and agglomeration of solids before storage and shipping. Low density prills have a high moisture content because of the lower melt concentration, and therefore require drying in rotary drums or fluidized beds before cooling.

Since the solids are produced in a wide variety of sizes, they must be screened for consistently sized prills or granules. Cooled prills are screened and offsize prills are dissolved and recycled to the solution concentration process. Granules are screened before cooling. Undersize particles are returned directly to the granulator and oversize granules may be either crushed and returned to the granulator or sent to the solution concentration process.

Following screening, products can be coated in a rotary drum to prevent agglomeration during storage and shipment. The most common coating materials are clays and diatomaceous earth. However, the use of additives in the ammonium nitrate melt before solidification, as described above, may preclude the use of coatings.

Solid ammonium nitrate is stored and shipped in either bulk or bags. Approximately 10 percent of solid ammonium nitrate produced in the U. S. is bagged.

8.3.3 Emissions And Controls

Emissions from ammonium nitrate production plants are particulate matter (ammonium nitrate and coating materials), ammonia, and nitric acid. Ammonia and nitric acid are emitted primarily from solution formation and granulators. Particulate matter (largely as ammonium nitrate) is emitted from most of the process operations and is the primary emission addressed here.

The emission sources in solution formation and concentration processes are neutralizers and evaporators, primarily emitting nitric acid and ammonia. The vapor stream off the top of the neutralization reactor is primarily steam with some ammonia and NH_4NO_3 particulates present. Specific plant operating characteristics, however, make these emissions vary depending upon use of excess ammonia or acid in the neutralizer. Since the neutralization operation can dictate the quantity of these emissions, a range of emission factors is presented in Tables 8.3-1 and 8.3-2. Units are expressed in terms of kilograms per megagram (kg/Mg) and pounds per ton (lb/ton). Particulate emissions from these operations tend to be smaller in size than those from solids production and handling processes and generally are recycled back to the process.

Table 8.3-1 (Metric Units). EMISSION FACTORS FOR PROCESSES IN AMMONIUM NITRATE MANUFACTURING PLANTS[a]

EMISSION FACTOR RATING: A (except as noted)

Process	Particulate Matter		Ammonia	Nitric Acid
	Uncontrolled (kg/Mg Of Product)	Controlled[b] (kg/Mg Of Product)	Uncontrolled[c] (kg/Mg Of Product)	Controlled[d] (kg/Mg Of Product)
Neutralizer	0.045 - 4.3[e]	0.002 - 0.22[e]	0.43 - 18.0[d]	0.042 - 1[e]
Evaporation/concentration operations	0.26	ND	0.27 - 16.7	ND
Solids formation operations				
High density prill towers	1.59	0.60	28.6	ND
Low density prill towers	0.46	0.26	0.13	ND
Rotary drum granulators	146	0.22	29.7	ND
Pan granulators	1.34	0.02	0.07	ND
Coolers and dryers[f]				
High density prill coolers	0.8	0.01	0.02	ND
Low density prill coolers	25.8	0.26	0.15	ND
Low density prill dryers	57.2	0.57	0 - 1.59	ND
Rotary drum granulator coolers	8.1	0.08	ND	ND
Pan granulator coolers	18.3	0.18[d]	ND	ND
Coating operations[g]	≤ 2.0[d]	≤ 0.02[d]	NA	NA
Bulk loading operations[g]	≤ 0.01[d]	ND	NA	NA

[a] Some ammonium nitrate emission factors are based on data gathered using a modification of EPA Method 5 (See Reference 1). ND = no data. NA = not applicable.

[b] Based on the following control efficiencies for wet scrubbers, applied to uncontrolled emissions: neutralizers, 95%; high density prill towers, 62%; low density prill towers, 43%; rotary drum granulators, 99.9%; pan granulators, 98.5%; coolers, dryers, and coaters, 99%.

[c] Given as ranges because of variation in data and plant operations. Factors for controlled emissions not presented due to conflicting results on control efficiency.

[d] Based on 95% recovery in a granulator recycle scrubber.

[e] EMISSION FACTOR RATING: B.

[f] Factors for coolers represent combined precooler and cooler emissions, and factors for dryers represent combined predryer and dryer emissions.

[g] Fugitive particulate emissions arise from coating and bulk loading operations.

Table 8.3-2 (English Units). EMISSION FACTORS FOR PROCESSES IN AMMONIUM NITRATE MANUFACTURING PLANTS[a]

EMISSION FACTOR RATING: A (except as noted)

Process	Particulate Matter		Ammonia	Nitric Acid
	Uncontrolled (lb/ton Of Product)	Controlled[b] (lb/ton Of Product)	Uncontrolled[c] (lb/ton Of Product)	Controlled[d] (lb/ton Of Product)
Neutralizer	0.09 - 8.6[c]	0.004 - 0.43[d]	0.86 - 36.02[d]	0.084 - 2[d,e]
Evaporation/concentration operations	0.52	ND	0.54 - 33.4	ND
Solids formation operations				
High density prill towers	3.18	1.20	57.2	ND
Low density prill towers	0.92	0.52	0.26	ND
Rotary drum granulators	392	0.44	59.4	ND
Pan granulators	2.68	0.04	0.14	ND
Coolers and dryers[f]				
High density prill coolers	1.6	0.02	0.04	ND
Low density prill coolers	51.6	0.52	0.30	ND
Low density prill dryers	114.4	1.14	0 - 3.18	ND
Rotary drum granulator coolers	16.2	0.16	ND	ND
Pan granulator coolers	36.6	0.36[d]	ND	ND
Coating operations[g]	≤ 4.0[d]	≤ 0.04[d]	NA	NA
Bulk loading operations[g]	≤ 0.02[d]	ND	NA	NA

[a] Some ammonium nitrate emission factors are based on data gathered using a modification of EPA Method 5 (See Reference 1). ND = no data. NA = not applicable.

[b] Based on the following control efficiencies for wet scrubbers, applied to uncontrolled emissions: neutralizers, 95%; high density prill towers, 62%; low density prill towers, 43%; rotary drum granulators, 99.9%; pan granulators, 98.5%; coolers, dryers, and coaters, 99%.

[c] Given as ranges because of variation in data and plant operations. Factors for controlled emissions not presented due to conflicting results on control efficiency.

[d] Based on 95% recovery in a granulator recycle scrubber.

[e] EMISSION FACTOR RATING: B.

[f] Factors for coolers represent combined precooler and cooler emissions, and factors for dryers represent combined predryer and dryer emissions.

[g] Fugitive particulate emissions arise from coating and bulk loading operations.

Emissions from solids formation processes are ammonium nitrate particulate matter and ammonia. The sources of primary importance are prill towers (for high density and low density prills) and granulators (rotary drum and pan). Emissions from prill towers result from carryover of fine particles and fume by the prill cooling air flowing through the tower. These fine particles are from microprill formation, from attrition of prills colliding with the tower or with one another, and from rapid transition of the ammonia nitrate between crystal states. The uncontrolled particulate emissions from prill towers, therefore, are affected by tower airflow, spray melt temperature, condition and type of melt spray device, air temperature, and crystal state changes of the solid prills. The amount of microprill mass that can be entrained in the prill tower exhaust is determined by the tower air velocity. Increasing spray melt temperature causes an increase in the amount of gas-phase ammonium nitrate generated. Thus, gaseous emissions from high density prilling are greater than from low density towers.

Microprill formation resulting from partially plugged orifices of melt spray devices can increase fine dust loading and emissions. Certain designs (spinning buckets) and practices (vibration of spray plates) help reduce microprill formation. High ambient air temperatures can cause increased emissions because of entrainment as a result of higher air flow required to cool prills and because of increased fume formation at the higher temperatures.

The granulation process in general provides a larger degree of control in product formation than does prilling. Granulation produces a solid ammonium nitrate product that, relative to prills, is larger and has greater abrasion resistance and crushing strength. The air flow in granulation processes is lower than that in prilling operations. Granulators, however, cannot produce low density ammonium nitrate economically with current technology. The design and operating parameters of granulators may affect emission rates. For example, the recycle rate of seed ammonium nitrate particles affects the bed temperature in the granulator. An increase in bed temperature resulting from decreased recycle of seed particles may cause an increase in dust emissions from granule disintegration.

Cooling and drying are usually conducted in rotary drums. As with granulators, the design and operating parameters of the rotary drums may affect the quantity of emissions. In addition to design parameters, prill and granule temperature control is necessary to control emissions from disintegration of solids caused by changes in crystal state.

Emissions from screening operations are generated by the attrition of the ammonium nitrate solids against the screens and against one another. Almost all screening operations used in the ammonium nitrate manufacturing industry are enclosed or have a cover over the uppermost screen. Screening equipment is located inside a building and emissions are ducted from the process for recovery or reuse.

Prills and granules are typically coated in a rotary drum. The rotating action produces a uniformly coated product. The mixing action also causes some of the coating material to be suspended, creating particulate emissions. Rotary drums used to coat solid product are typically kept at a slight negative pressure and emissions are vented to a particulate control device. Any dust captured is usually recycled to the coating storage bins.

Bagging and bulk loading operations are a source of particulate emissions. Dust is emitted from each type of bagging process during final filling when dust-laden air is displaced from the bag by the ammonium nitrate. The potential for emissions during bagging is greater for coated than for uncoated material. It is expected that emissions from bagging operations are primarily the kaolin, talc, or diatomaceous earth coating matter. About 90 percent of solid ammonium nitrate produced

domestically is bulk loaded. While particulate emissions from bulk loading are not generally controlled, visible emissions are within typical state regulatory requirements (below 20 percent opacity).

Tables 8.3-1 and 8.3-2 summarize emission factors for various processes involved in the manufacture of ammonium nitrate. Uncontrolled emissions of particulate matter, ammonia, and nitric acid are also given in Tables 8.3-1 and 8.3-2. Emissions of ammonia and nitric acid depend upon specific operating practices, so ranges of factors are given for some emission sources.

Emission factors for controlled particulate emissions are also in Tables 8.3-1 and 8.3-2, reflecting wet scrubbing particulate control techniques. The particle size distribution data presented in Table 8.3-3 indicate the emissions. In addition, wet scrubbing is used as a control technique because the solution containing the recovered ammonium nitrate can be sent to the solution concentration process for reuse in production of ammonium nitrate, rather than to waste disposal facilities.

Table 8.3-3 (Metric Units). PARTICLE SIZE DISTRIBUTION DATA FOR UNCONTROLLED EMISSIONS FROM AMMONIUM NITRATE MANUFACTURING FACILITIES[a]

Operation	Cumulative Weight %		
	≤ 2.5 μm	≤ 5 μm	≤ 10 μm
Solids Formation Operations			
Low density prill tower	56	73	83
Rotary drum granulator	0.07	0.3	2
Coolers and Dryers			
Low density prill cooler	0.03	0.09	0.4
Low density prill predryer	0.03	0.06	0.2
Low density prill dryer	0.04	0.04	0.15
Rotary drum granulator cooler	0.06	0.5	3
Pan granulator precooler	0.3	0.3	1.5

[a] References 5,12-13,23-24. Particle size determinations were not done in strict accordance with EPA Method 5. A modification was used to handle the high concentrations of soluble nitrogenous compounds.[1] Particle size distributions were not determined for controlled particulate emissions.

References For Section 8.3

1. *Ammonium Nitrate Manufacturing Industry: Technical Document*, EPA-450/3-81-002, U. S. Environmental Protection Agency, Research Triangle Park, NC, January 1981.

2. W. J. Search and R. B. Reznik, *Source Assessment: Ammonium Nitrate Production*, EPA-600/2-77-107i, U. S. Environmental Protection Agency, Cinncinnati, OH, September 1977.

3. North American Fertilizer Capacity Data, Tennessee Valley Authority, Muscle Shoals, AL, December, 1991.

4. Memo from C. D. Anderson, Radian Corporation, Research Triangle Park, NC, to Ammonium Nitrate file, July 2, 1980.

5. D. P. Becvar, *et al.*, *Ammonium Nitrate Emission Test Report: Union Oil Company Of California*, EMB-78-NHF-7, U. S. Environmental Protection Agency, Research Triangle Park, NC, October 1979.

6. K. P. Brockman, *Emission Tests For Particulates*, Cominco American, Beatrice, NE, 1974.

7. Written communication from S. V. Capone, GCA Corporation, Chapel Hill, NC, to E. A. Noble, U. S. Environmental Protection Agency, Research Triangle Park, NC, September 6, 1979.

8. Written communication from D. E. Cayard, Monsanto Agricultural Products Company, St. Louis, MO, to E. A. Noble, U. S. Environmental Protection Agency, Research Triangle Park, NC, December 4, 1978.

9. Written communication from D. E. Cayard, Monsanto Agricultural Products Company, St. Louis, MO, to E. A. Noble, U. S. Environmental Protection Agency, Research Triangle Park, NC, December 27, 1978.

10. Written communication from T. H. Davenport, Hercules Incorporated, Donora, PA, to D. R. Goodwin, U. S. Environmental Protection Agency, Research Triangle Park, NC, November 16, 1978.

11. R. N. Doster and D. J. Grove, *Source Sampling Report: Atlas Powder Company*, Entropy Environmentalists, Inc., Research Triangle Park, NC, August 1976.

12. M. D. Hansen, *et al.*, *Ammonium Nitrate Emission Test Report: Swift Chemical Company*, EMB-79-NHF-11, U. S. Environmental Protection Agency, Research Triangle Park, NC, July 1980.

13. R. A. Kniskern, *et al.*, *Ammonium Nitrate Emission Test Report: Cominco American, Inc.*, Beatrice, NE, EMB-79-NHF-9, U. S. Environmental Protection Agency, Research Triangle Park, NC, April 1979.

14. Written communication from J. A. Lawrence, C. F. Industries, Long Grove, IL, to D. R. Goodwin, U. S. Environmental Protection Agency, Research Triangle Park, NC, December 15, 1978.

15. Written communication from F. D. McLauley, Hercules Incorporated, Louisiana, MO, to D. R. Goodwin, U. S. Environmental Protection Agency, Research Triangle Park, NC, October 31, 1978.

16. W. E. Misa, *Report Of Source Test: Collier Carbon And Chemical Corporation (Union Oil)*, Test No. 5Z-78-3, Anaheim, CA, January 12, 1978.

17. Written communication from L. Musgrove, Georgia Department Of Natural Resources, Atlanta, GA, to R. Rader, Radian Corporation, Research Triangle Park, NC, May 21, 1980.

18. Written communication from D. J. Patterson, Nitrogen Corporation, Cincinnati, OH, to E. A. Noble, U. S. Environmental Protection Agency, Research Triangle Park, NC, March 26, 1979.

19. Written communication from H. Schuyten, Chevron Chemical Company, San Francisco, CA, to D. R. Goodwin, U. S. Environmental Protection Agency, March 2, 1979.

20. *Emission Test Report: Phillips Chemical Company*, Texas Air Control Board, Austin, TX, 1975.

21. *Surveillance Report: Hawkeye Chemical Company*, U. S. Environmental Protection Agency, Research Triangle Park, NC, December 29, 1976.

22. W. A. Wade and R. W. Cass, *Ammonium Nitrate Emission Test Report: C.F. Industries*, EMB-79-NHF-10, U. S. Environmental Protection Agency, Research Triangle Park, NC, November 1979.

23. W. A. Wade, *et al.*, *Ammonium Nitrate Emission Test Report: Columbia Nitrogen Corporation*, EMB-80-NHF-16, U. S. Environmental Protection Agency, Research Triangle Park, NC, January, 1981.

24. York Research Corporation, *Ammonium Nitrate Emission Test Report: Nitrogen Corporation*, EMB-78-NHF-5, U. S. Environmental Protection Agency, Research Triangle Park, NC, May 1979.

8.4 Ammonium Sulfate

8.4.1 General[1-2]

Ammonium sulfate ($[NH_4]_2SO_4$) is commonly used as a fertilizer. In 1991, U. S. facilities produced about 2.7 million megagrams (Mg) (3 million tons) of ammonium sulfate in about 35 plants. Production rates at these plants range from 1.8 to 360 Mg (2 to 400 tons) per year.

8.4.2 Process Description[1]

About 90 percent of ammonium sulfate is produced by 3 different processes: (1) as a byproduct of caprolactam [$(CH_2)_5COHN$] production, (2) from synthetic manufacture, and (3) as a coke oven byproduct. The remainder is produced as a byproduct of either nickel or methyl methacrylate manufacture, or from ammonia (NH_3) scrubbing of tailgas at sulfuric acid (H_2SO_4) plants. These minor sources are not discussed here.

Ammonium sulfate is produced as a byproduct from the caprolactam oxidation process stream and the rearrangement reaction stream. Synthetic ammonium sulfate is produced by combining anhydrous ammonia and sulfuric acid in a reactor. Coke oven byproduct ammonium sulfate is produced by reacting the ammonia recovered from coke oven offgas with sulfuric acid. Figure 8.4-1 is a diagram of typical ammonium sulfate manufacturing for each of the 3 primary commercial processes.

After formation of the ammonium sulfate solution, manufacturing operations of each process are similar. Ammonium sulfate crystals are formed by circulating the ammonium sulfate liquor through a water evaporator, which thickens the solution. Ammonium sulfate crystals are separated from the liquor in a centrifuge. In the caprolactam byproduct process, the product is first transferred to a settling tank to reduce the liquid load on the centrifuge. The saturated liquor is returned to the dilute ammonium sulfate brine of the evaporator. The crystals, which contain about 1 to 2.5 percent moisture by weight after the centrifuge, are fed to either a fluidized-bed or a rotary drum dryer. Fluidized-bed dryers are continuously steam heated, while the rotary dryers are fired directly with either oil or natural gas or may use steam-heated air.

At coke oven byproduct plants, rotary vacuum filters may be used in place of a centrifuge and dryer. The crystal layer is deposited on the filter and is removed as product. These crystals are generally not screened, although they contain a wide range of particle sizes. They are then carried by conveyors to bulk storage.

At synthetic plants, a small quantity (about 0.05 percent) of a heavy organic (i. e., high molecular weight organic) is added to the product after drying to reduce caking.

Dryer exhaust gases pass through a particulate collection device, such as a wet scrubber. This collection controls emissions and reclaims residual product. After being dried, the ammonium sulfate crystals are screened into coarse and fine crystals. This screening is done in an enclosed area to restrict fugitive dust in the building.

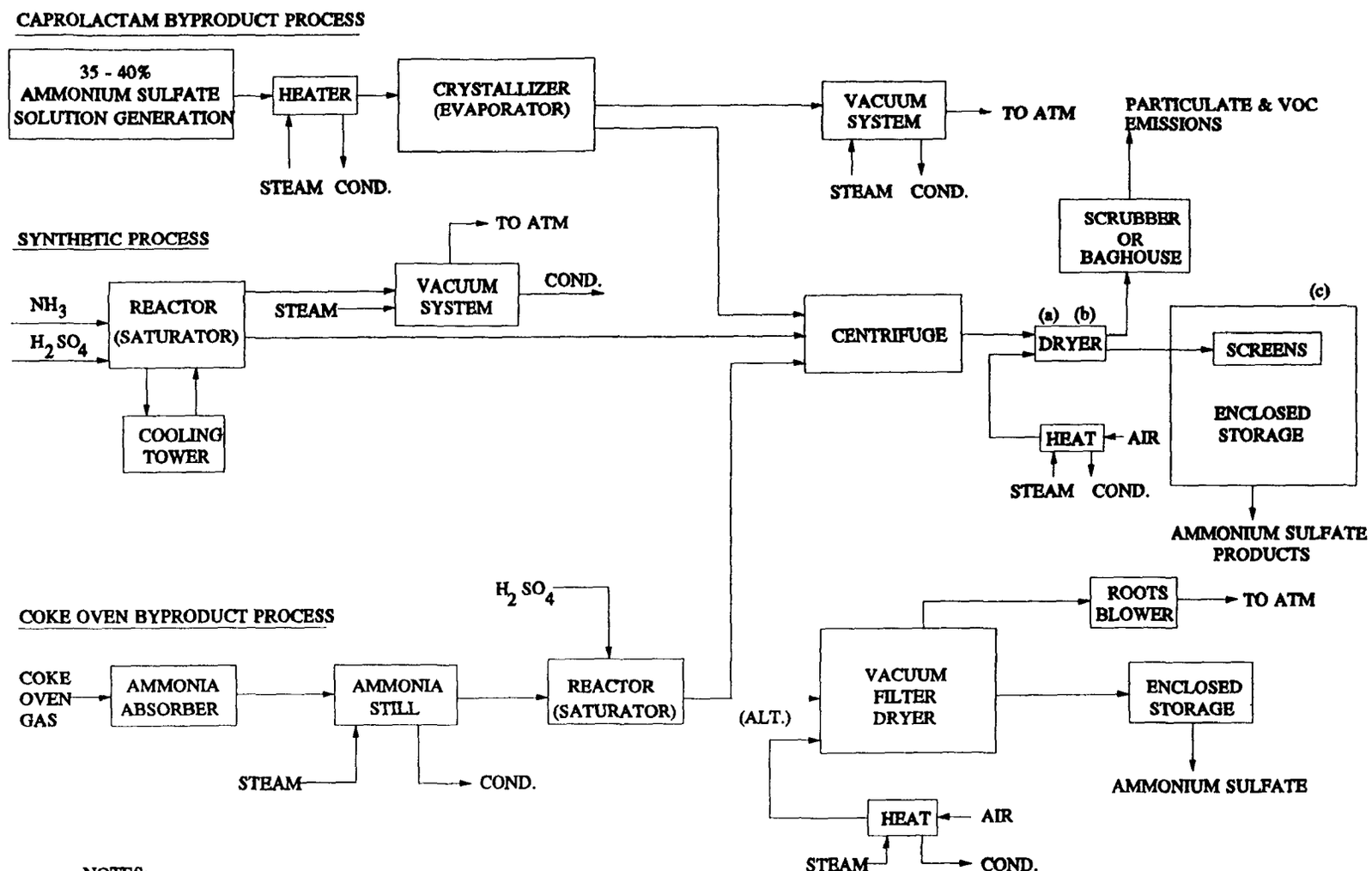

NOTES:

(a) Dryer may be rotary or fluidized bed type.
(b) Coke oven plant may integrate centrifuge and drying or centrifuging only.
(c) Coke oven plant product not screened.
ATM = atmosphere. ALT. = alternate. COND. = condensate

Figure 8.4-1. Typical diagram of ammonium sulfate processes.

8.4.3 Emissions And Controls[1]

Ammonium sulfate particulate is the principal emission from ammonium sulfate manufacturing plants. The gaseous exhaust of the dryers contains nearly all the emitted ammonium sulfate. Other plant processes, such as evaporation, screening and materials handling, are not significant sources of emissions.

The particulate emission rate of a dryer is dependent on gas velocity and particle size distribution. Gas velocity, and thus emission rates, varies according to the dryer type. Generally, the gas velocity of fluidized-bed dryers is higher than for most rotary drum dryers. Therefore, the particulate emission rates are higher for fluidized-bed dryers. At caprolactam byproduct plants, relatively small amounts of volatile organic compounds (VOC) are emitted from the dryers.

Some plants use baghouses for emission control, but wet scrubbers, such as venturi and centrifugal scrubbers, are more suitable for reducing particulate emissions from the dryers. Wet scrubbers use the process streams as the scrubbing liquid so that the collected particulate can be easily recycled to the production system.

Table 8.4-1 shows uncontrolled and controlled particulate and VOC emission factors for various dryer types. Emission factors are in units of kilograms per megagram (kg/Mg) and pounds per ton (lb/ton). The VOC emissions shown apply only to caprolactam byproduct plants.

Table 8.4-1 (Metric And English Units). EMISSION FACTORS FOR AMMONIUM SULFATE MANUFACTURE[a]

EMISSION FACTOR RATING: C (except as noted)

Dryer Type	Particulate		VOC[b]	
	kg/Mg	lb/ton	kg/Mg	lb/ton
Rotary dryers				
Uncontrolled	23	46	0.74	1.48
Wet scrubber	0.02[c]	0.04[c]	0.11	0.22
Fluidized-bed dryers				
Uncontrolled	109	218	0.74	1.48
Wet scrubber	0.14	0.28	0.11	0.22

[a] Reference 3. Units are kg of pollutant/Mg of ammonium sulfate produced (lb of pollutant/ton of ammonium sulfate produced).
[b] VOC emissions occur only at caprolactam plants. The emissions are caprolactam vapor.
[c] Reference 4. EMISSION FACTOR RATING: A.

References For Section 8.4

1. *Ammonium Sulfate Manufacture: Background Information For Proposed Emission Standards*, EPA-450/3-79-034a, U. S. Environmental Protection Agency, Research Triangle Park, NC, December 1979.

2. *North American Fertilizer Capacity Data*, Tennessee Valley Authority, Muscle Shoals, AL, December 1991.

3. *Emission Factor Documentation For Section 8.4, Ammonium Sulfate Manufacture*, Pacific Environmental Services, Inc., Research Triangle Park, NC, March 1981.

4. *Compliance Test Report: J. R. Simplot Company*, Pocatello, ID, February, 1990.

8.5 Phosphate Fertilizers

Phosphate fertilizers are classified into 3 groups of chemical compounds. Two of these groups are known as superphosphates and are defined by the percentage of phosphorus as phosphorus pentoxide (P_2O_5). Normal superphosphate contains between 15 and 21 percent phosphorus as P_2O_5 whereas triple superphosphate contains over 40 percent phosphorus. The remaining group is ammonium phosphate ($NH_4H_2PO_4$).

8.5.1 Normal Superphosphates

8.5.1.1 General[1-3]

Normal superphosphate refers to fertilizer material containing 15 to 21 percent phosphorus as phosphorus pentoxide (P_2O_5). As defined by the Census Bureau, normal superphosphate contains not more than 22 percent of available P_2O_5. There are currently about 8 fertilizer facilities producing normal superphosphates in the U. S. with an estimated total production of about 273,000 megagrams (Mg) (300,000 tons) per year.

8.5.1.2 Process Description[1]

Normal superphosphates are prepared by reacting ground phosphate rock with 65 to 75 percent sulfuric acid. An important factor in the production of normal superphosphates is the amount of iron and aluminum in the phosphate rock. Aluminum (as Al_2O_3) and iron (as Fe_2O_3) above 5 percent imparts an extreme stickiness to the superphosphate and makes it difficult to handle.

The 2 general types of sulfuric acid used in superphosphate manufacture are virgin and spent acid. Virgin acid is produced from elemental sulfur, pyrites, and industrial gases and is relatively pure. Spent acid is a recycled waste product from various industries that use large quantities of sulfuric acid. Problems encountered with using spent acid include unusual color, unfamiliar odor, and toxicity.

A generalized flow diagram of normal superphosphate production is shown in Figure 8.5.1-1. Ground phosphate rock and acid are mixed in a reaction vessel, held in an enclosed area for about 30 minutes until the reaction is partially completed, and then transferred, using an enclosed conveyer known as the den, to a storage pile for curing (the completion of the reaction). Following curing, the product is most often used as a high-phosphate additive in the production of granular fertilizers. It can also be granulated for sale as granulated superphosphate or granular mixed fertilizer. To produce granulated normal superphosphate, cured superphosphate is fed through a clod breaker and sent to a rotary drum granulator where steam, water, and acid may be added to aid in granulation. Material is processed through a rotary drum granulator, a rotary dryer, and a rotary cooler, and is then screened to specification. Finally, it is stored in bagged or bulk form prior to being sold.

8.5.1.3 Emissions And Controls[1-6]

Sources of emissions at a normal superphosphate plant include rock unloading and feeding, mixing operations (in the reactor), storage (in the curing building), and fertilizer handling operations. Rock unloading, handling, and feeding generate particulate emissions of phosphate rock dust. The mixer, den, and curing building emit gases in the form of silicon tetrafluoride (SiF_4), hydrogen fluoride (HF), and particulates composed of fluoride and phosphate material. Fertilizer handling operations release fertilizer dust. Emission factors for the production of normal superphosphate are presented in Table 8.5.1-1. Units are expressed in terms of kilograms per megagram (kg/Mg) and pounds per ton (lb/ton).

At a typical normal superphosphate plant, emissions from the rock unloading, handling, and feeding operations are controlled by a baghouse. Baghouse cloth filters have reported efficiencies of den are controlled by a wet scrubber. The curing building and fertilizer handling operations over

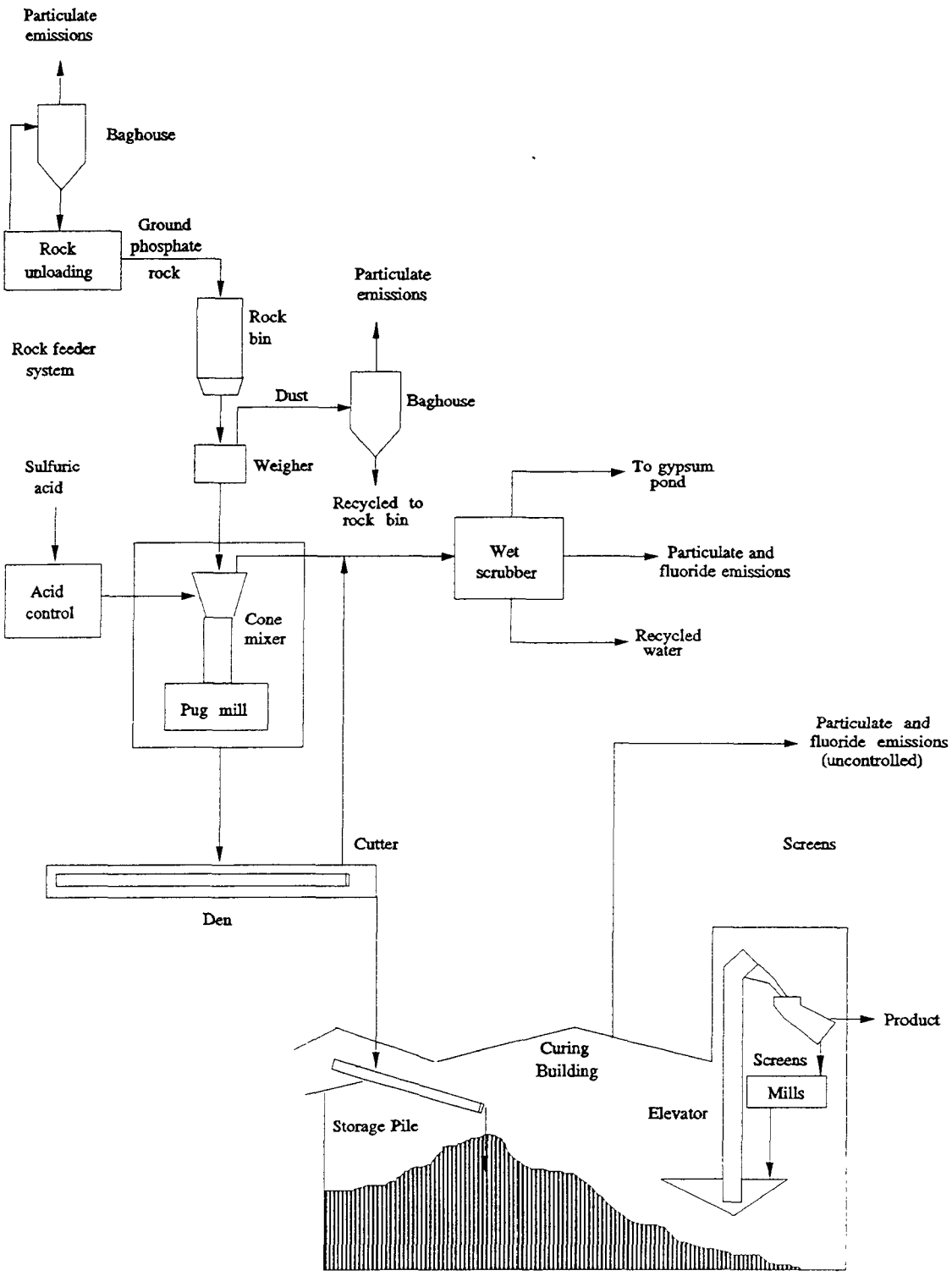

Figure 8.5.1-1. Normal superphosphate process flow diagram.[1]

Table 8.5.1-1 (Metric And English Units). EMISSION FACTORS FOR THE PRODUCTION OF NORMAL SUPERPHOSPHATE

EMISSION FACTOR RATING: E

Emission Point	Pollutant	Emission Factor	
		kg/Mg Of P_2O_5 Produced	lb/ton Of P_2O_5 Produced
Rock unloading[a]	Particulate[b]	0.28	0.56
	PM-10[c]	0.15	0.29
Rock feeding[a]	Particulate[b]	0.06	0.11
	PM-10[c]	0.03	0.06
Mixer and den[d]	Particulate[b]	0.26	0.52
	Fluoride[b]	0.10	0.2
	PM-10[c]	0.22	0.44
Curing building[e]	Particulate[b]	3.60	7.20
	Fluoride[b]	1.90	3.80
	PM-10[c]	3.0	6.1

[a] Factors are for emissions from baghouse with an estimated collection efficiency of 99%. PM-10 = particulate matter no greater than 10 micrometers.
[b] Reference 1, pp. 74-77, 169.
[c] Taken from Aerometric Information Retrieval System (AIRS) Listing for Criteria Air Pollutants.
[d] Factors are for emissions from wet scrubbers with a reported 97% control efficiency.
[e] Uncontrolled.

99 percent under ideal conditions. Collected dust is recycled. Emissions from the mixer and den are controlled by a wet scrubber. The curing building and fertilizer handling operations normally are not controlled.

SiF_4 and HF emissions, and particulate from the mixer, den, and curing building are controlled by scrubbing the offgases with recycled water. Gaseous SiF_4 in the presence of moisture reacts to form gelatinous silica, which has a tendency to plug scrubber packings. The use of conventional packed-countercurrent scrubbers and other contacting devices with small gas passages for emissions control is therefore limited. Scrubbers that can be used are cyclones, venturi, impingement, jet ejector, and spray-crossflow packed scrubbers. Spray towers are also used as precontactors for fluorine removal at relatively high concentration levels of greater than 4.67 grams per cubic meter (3000 parts per million).

Air pollution control techniques vary with particular plant designs. The effectiveness of abatement systems in removing fluoride and particulate also varies from plant to plant, depending on a number of factors. The effectiveness of fluorine abatement is determined by the inlet fluorine concentration, outlet or saturated gas temperature, composition and temperature of the scrubbing liquid, scrubber type and transfer units, and the effectiveness of entrainment separation. Control efficiency is enhanced by increasing the number of scrubbing stages in series and by using a fresh water scrub in the final stage. Reported efficiencies for fluoride control range from less than 90 percent to over 99 percent, depending on inlet fluoride concentrations and the system employed. An efficiency of 98 percent for particulate control is achievable.

The emission factors have not been adjusted by this revision, but they have been downgraded to an "E" quality rating based on the absence of supporting source tests. The PM-10 (particulate matter with a diameter of less than 10 micrometers) emission factors have been added to the table, but were taken from the AIRS Listing for Criteria Air Pollutants, which is also rated "E". No additional or recent data were found concerning fluoride emissions from gypsum ponds. A number of hazardous air pollutants (HAPs) have been identified by SPECIATE as being present in the phosphate manufacturing process. Some HAPs identified include hexane, methyl alcohol, formaldehyde, methyl ethyl ketone, benzene, toluene, and styrene. Heavy metals such as lead and mercury are present in the phosphate rock. The phosphate rock is mildly radioactive due to the presence of some radionuclides. No emission factors are included for these HAPs, heavy metals, or radionuclides due to the lack of sufficient data.

References For Section 8.5.1

1. J. M. Nyers, *et al.*, *Source Assessment: Phosphate Fertilizer Industry*, EPA-600/2-79-019c, U. S. Environmental Protection Agency, Cinncinnati, OH, May 1979.

2. H. C. Mann, *Normal Superphosphate*, National Fertilizer & Environmental Research Center, Tennessee Valley Authority, Muscle Shoals, AL, February 1992.

3. North American Fertilizer Capacity Data (including supplement), Tennessee Valley Authority, Muscle Shoals, AL, December 1991.

4. *Background Information For Standards Of Performance: Phosphate Fertilizer Industry: Volume 1: Proposed Standards*, EPA-450/2-74-019a, U. S. Environmental Protection Agency, Research Triangle Park, NC, October 1974.

5. *Background Information For Standards Of Performance: Phosphate Fertilizer Industry: Volume 2: Test Data Summary*, EPA-450/2-74-019b, U. S. Environmental Protection Agency, Research Triangle Park, NC, October 1974.

6. *Final Guideline Document: Control Of Fluoride Emissions From Existing Phosphate Fertilizer Plants*, EPA-450/2-77-005, U. S. Environmental Protection Agency, Research Triangle Park, NC, March 1977.

8.5.2 Triple Superphosphates

8.5.2.1 General[2-3]

Triple superphosphate, also known as double, treble, or concentrated superphosphate, is a fertilizer material with a phosphorus content of over 40 percent, measured as phosphorus pentoxide (P_2O_5). Triple superphosphate is produced in only 6 fertilizer facilities in the U. S. In 1989, there were an estimated 3.2 million megagrams (Mg) (3.5 million tons) of triple superphosphate produced. Production rates from the various facilities range from 23 to 92 Mg (25 to 100 tons) per hour.

8.5.2.2 Process Description[1-2]

Two processes have been used to produce triple superphosphate: run-of-the-pile (ROP-TSP) and granular (GTSP). At this time, no facilities in the U. S. are currently producing ROP-TSP, but a process description is given.

The ROP-TSP material is essentially a pulverized mass of variable particle size produced in a manner similar to normal superphosphate. Wet-process phosphoric acid (50 to 55 percent P_2O_5) is reacted with ground phosphate rock in a cone mixer. The resultant slurry begins to solidify on a slow moving conveyer en route to the curing area. At the point of discharge from the den, the material passes through a rotary mechanical cutter that breaks up the solid mass. Coarse ROP-TSP product is sent to a storage pile and cured for 3 to 5 weeks. The product is then mined from the storage pile to be crushed, screened, and shipped in bulk.

GTSP yields larger, more uniform particles with improved storage and handling properties. Most of this material is made with the Dorr-Oliver slurry granulation process, illustrated in Figure 8.5.2-1. In this process, ground phosphate rock or limestone is reacted with phosphoric acid in 1 or 2 reactors in series. The phosphoric acid used in this process is appreciably lower in concentration (40 percent P_2O_5) than that used to manufacture ROP-TSP product. The lower strength acid maintains the slurry in a fluid state during a mixing period of 1 to 2 hours. A small sidestream of slurry is continuously removed and distributed onto dried, recycled fines, where it coats the granule surfaces and builds up its size.

Pugmills and rotating drum granulators have been used in the granulation process. Only 1 pugmill is currently operating in the U. S. A pugmill is composed of a U-shaped trough carrying twin counter-rotating shafts, upon which are mounted strong blades or paddles. The blades agitate, shear, and knead the liquified mix and transport the material along the trough. The basic rotary drum granulator consists of an open-ended, slightly inclined rotary cylinder, with retaining rings at each end and a scraper or cutter mounted inside the drum shell. A rolling bed of dry material is maintained in the unit while the slurry is introduced through distributor pipes set lengthwise in the drum under the bed. Slurry-wetted granules are then discharged onto a rotary dryer, where excess water is evaporated and the chemical reaction is accelerated to completion by the dryer heat. Dried granules are then sized on vibrating screens. Oversize particles are crushed and recirculated to the screen, and undersize particles are recycled to the granulator. Product-size granules are cooled in a countercurrent rotary drum, then sent to a storage pile for curing. After a curing period of 3 to 5 days, granules are removed from storage, screened, bagged, and shipped.

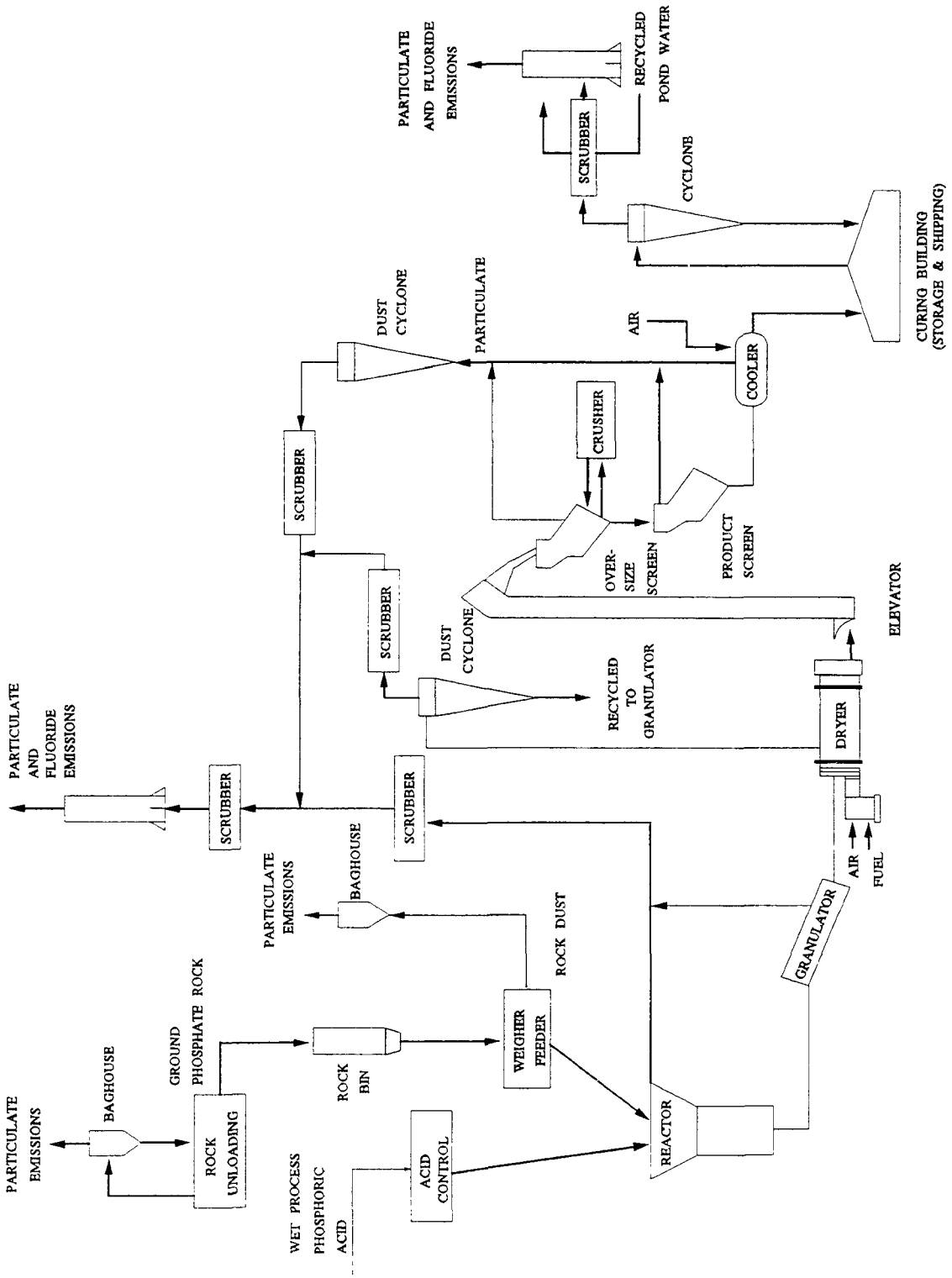

Figure 8.5.2-1. Dorr-Oliver process for granular triple superphosphate production.[1]

8.5.2.3 Emissions And Controls[1-6]

Controlled emission factors for the production of GTSP are given in Table 8.5.2-1. Units are expressed in terms of kilograms per megagrams (kg/Mg) and pounds per ton (lb/ton). Emission factors for ROP-TSP are not given since it is not being produced currently in the U. S.

Table 8.5.2-1 (Metric And English Units). CONTROLLED EMISSION FACTORS FOR THE PRODUCTION OF TRIPLE SUPERPHOSPHATES

EMISSION FACTOR RATING: E

Granular Triple Superphosphate Process	Pollutant	Controlled Emission Factor	
		kg/Mg Of Product	lb/ton Of Product
Rock unloading[a]	Particulate[b]	0.09	0.18
	PM-10[c]	0.04	0.08
Rock feeding[a]	Particulate[b]	0.02	0.04
	PM-10[c]	0.01	0.02
Reactor, granulator, dryer, cooler, and screens[d]	Particulate[b]	0.05	0.10
	Fluoride[b]	0.12	0.24
	PM-10[c]	0.04	0.08
Curing building[d]	Particulate[b]	0.10	0.20
	Fluoride[b]	0.02	0.04
	PM-10[c]	0.08	0.17

[a] Factors are for emissions from baghouses with an estimated collection efficiency of 99%. PM-10 = particulate matter with a diameter of less than 10 micrometers.
[b] Reference 1, pp. 77-80, 168, 170-171.
[c] Based on Aerometic Information Retrieval System (AIRS) Listing For Criteria Air Pollutants.
[d] Factors are for emissions from wet scrubbers with an estimated 97% control efficiency.

Sources of particulate emissions include the reactor, granulator, dryer, screens, cooler, mills, and transfer conveyors. Additional emissions of particulate result from the unloading, grinding, storage, and transfer of ground phosphate rock. One facility uses limestone, which is received in granulated form and does not require additional milling.

Emissions of fluorine compounds and dust particles occur during the production of GTSP triple superphosphate. Silicon tetrafluoride (SiF_4) and hydrogen fluoride (HF) are released by the acidulation reaction and they evolve from the reactors, den, granulator, and dryer. Evolution of fluoride is essentially finished in the dryer and there is little fluoride evolved from the storage pile in the curing building.

At a typical plant, baghouses are used to control the fine rock particles generated by the rock grinding and handling activities. Emissions from the reactor, den, and granulator are controlled by scrubbing the effluent gas with recycled gypsum pond water in cyclonic scrubbers. Emissions from

the dryer, cooler, screens, mills, product transfer systems, and storage building are sent to a cyclone separator for removal of a portion of the dust before going to wet scrubbers to remove fluorides.

Particulate emissions from ground rock unloading, storage, and transfer systems are controlled by baghouse collectors. These baghouse cloth filters have reported efficiencies of over 99 percent. Collected solids are recycled to the process. Emissions of SiF_4, HF, and particulate from the production area and curing building are controlled by scrubbing the offgases with recycled water. Exhausts from the dryer, cooler, screens, mills, and curing building are sent first to a cyclone separator and then to a wet scrubber. Tailgas wet scrubbers perform final cleanup of the plant offgases.

Gaseous SiF_4 in the presence of moisture reacts to form gelatinous silica, which has the tendency to plug scrubber packings. Therefore, the use of conventional packed countercurrent scrubbers and other contacting devices with small gas passages for emissions control is not feasible. Scrubber types that can be used are: (1) spray tower, (2) cyclone, (3) venturi, (4) impingement, (5) jet ejector, and (6) spray-crossflow packed.

The effectiveness of abatement systems for the removal of fluoride and particulate varies from plant to plant, depending on a number of factors. The effectiveness of fluorine abatement is determined by: (1) inlet fluorine concentration, (2) outlet or saturated gas temperature, (3) composition and temperature of the scrubbing liquid, (4) scrubber type and transfer units, and (5) effectiveness of entrainment separation. Control efficiency is enhanced by increasing the number of scrubbing stages in series and by using a fresh water scrub in the final stage. Reported efficiencies for fluoride control range from less than 90 percent to over 99 percent, depending on inlet fluoride concentrations and the system employed. An efficiency of 98 percent for particulate control is achievable.

The particulate and fluoride emission factors are identical to the previous revisions, but have been downgraded to "E" quality because no documented, up-to-date source tests were available and previous emission factors could not be validated from the references which were given. The PM-10 emission factors have been added to the table, but were derived from the AIRS data base, which also has an "E" rating. No additional or recent data were found concerning fluoride emissions from gypsum ponds. A number of hazardous air pollutants (HAP) have been identified by SPECIATE as being present in the phosphate fertilizer manufacturing process. Some HAPs identified include hexane, methyl alcohol, formaldehyde, methyl ethyl ketone, benzene, toluene, and styrene. Heavy metals such as lead and mercury are present in the phosphate rock. The phosphate rock is mildly radioactive due to the presence of some radionuclides. No emission factors are included for these HAPs, heavy metals, or radionuclides due to the lack of sufficient data.

References For Section 8.5.2

1. J. M. Nyers, *et al.*, *Source Assessment: Phosphate Fertilizer Industry*, EPA-600/2-79-019c, U. S. Environmental Protection Agency, Cinncinnati, OH, May 1979.

2. H. C. Mann, *Triple Superphosphate*, National Fertilizer & Environmental Research Center, Tennessee Valley Authority, Muscle Shoals, AL, February 1992.

3. *North American Fertilizer Capacity Data* (including supplement), Tennessee Valley Authority, Muscle Shoals, AL, December 1991.

4. *Background Information For Standards Of Performance: Phosphate Fertilizer Industry: Volume 1: Proposed Standards*, EPA-450/2-74-019a, U. S. Environmental Protection Agency, Research Triangle Park, NC, October 1974.

5. *Background Information For Standards Of Performance: Phosphate Fertilizer Industry: Volume 2: Test Data Summary*, EPA-450/2-74-019b, U. S. Environmental Protection Agency, Research Triangle Park, NC, October 1974.

6. *Final Guideline Document: Control Of Fluoride Emissions From Existing Phosphate Fertilizer Plants*, EPA-450/2-77-005, U. S. Environmental Protection Agency, Research Triangle Park, NC, March 1977.

8.5.3 Ammonium Phosphate

8.5.3.1 General[1]

Ammonium phosphate ($NH_4H_2PO_4$) is produced by reacting phosphoric acid (H_3PO_4) with anhydrous ammonia (NH_3). Ammoniated superphosphates are produced by adding normal superphosphate or triple superphosphate to the mixture. The production of liquid ammonium phosphate and ammoniated superphosphates in fertilizer mixing plants is considered a separate process. Both solid and liquid ammonium phosphate fertilizers are produced in the U. S. This discussion covers only the granulation of phosphoric acid with anhydrous ammonia to produce granular fertilizer. Total ammonium phosphate production in the U. S. in 1992 was estimated to be 7.7 million megagrams (Mg) (8.5 million tons).[2]

8.5.3.2 Process Description[1]

Two basic mixer designs are used by ammoniation-granulation plants: the pugmill ammoniator and the rotary drum ammoniator. Approximately 95 percent of ammoniation-granulation plants in the U. S. use a rotary drum mixer developed and patented by the Tennessee Valley Authority (TVA). The basic rotary drum ammoniator-granulator consists of a slightly inclined open-end rotary cylinder with retaining rings at each end, and a scrapper or cutter mounted inside the drum shell. A rolling bed of recycled solids is maintained in the unit.

Ammonia-rich offgases pass through a wet scrubber before exhausting to the atmosphere. Primary scrubbers use raw materials mixed with acids (such as scrubbing liquor), and secondary scrubbers use gypsum pond water.

In the TVA process, phosphoric acid is mixed in an acid surge tank with 93 percent sulfuric acid (H_2SO_4), which is used for product analysis control, and with recycled acid from wet scrubbers. (A schematic diagram of the ammonium phosphate process flow diagram is shown in Figure 8.5.3-1.) Mixed acids are then partially neutralized with liquid or gaseous anhydrous ammonia in a brick-lined acid reactor. All of the phosphoric acid and approximately 70 percent of the ammonia are introduced into this vessel. A slurry of ammonium phosphate and 22 percent water are produced and sent through steam-traced lines to the ammoniator-granulator. Slurry from the reactor is distributed on the bed; the remaining ammonia (approximately 30 percent) is sparged underneath. Granulation, by agglomeration and by coating particulate with slurry, takes place in the rotating drum and is completed in the dryer. Ammonia-rich offgases pass through a wet scrubber before exhausting to the atmosphere. Primary scrubbers use raw materials mixed with acid (such as scrubbing liquor), and secondary scrubbers use pond water.

Moist ammonium phosphate granules are transferred to a rotary concurrent dryer and then to a cooler. Before being exhausted to the atmosphere, these offgases pass through cyclones and wet scrubbers. Cooled granules pass to a double-deck screen, in which oversize and undersize particles are separated from product particles. The product ranges in granule size from 1 to 4 millimeters. The oversized granules are crushed, mixed with the undersized, and recycled back to the ammoniator-granulator.

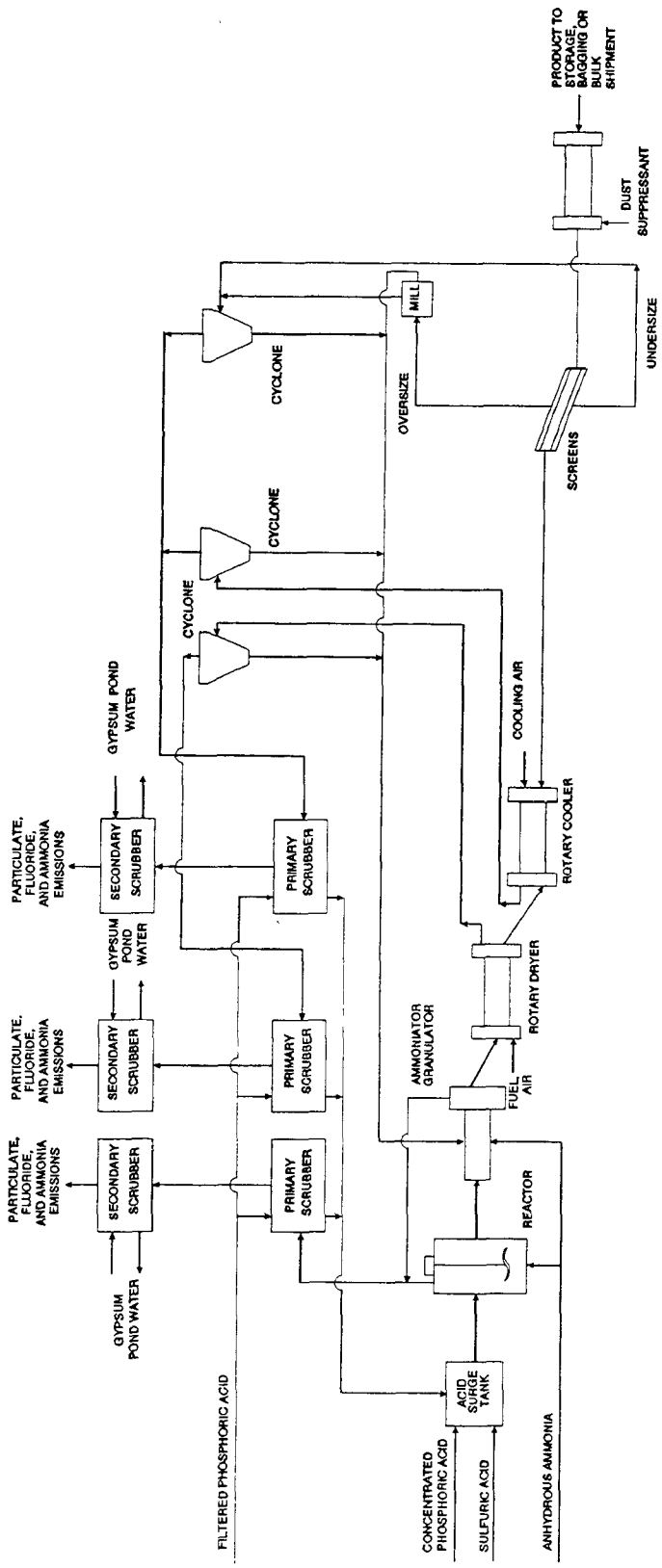

Figure 8.5.3-1. Ammonium phosphate process flow diagram.

8.5.3.3 Emissions And Controls[1]

Sources of air emissions from the production of ammonium phosphate fertilizers include the reactor, the ammoniator-granulator, the dryer and cooler, product sizing and material transfer, and the gypsum pond. The reactor and ammoniator-granulator produce emissions of gaseous ammonia, gaseous fluorides such as hydrogen fluoride (HF) and silicon tetrafluoride (SiF_4), and particulate ammonium phosphates. These 2 exhaust streams are generally combined and passed through primary and secondary scrubbers.

Exhaust gases from the dryer and cooler also contain ammonia, fluorides, and particulates and these streams are commonly combined and passed through cyclones and primary and secondary scrubbers. Particulate emissions and low levels of ammonia and fluorides from product sizing and material transfer operations are controlled the same way.

Emissions factors for ammonium phosphate production are summarized in Table 8.5.3-1. Units are expressed in terms of kilograms per megagram (kg/Mg) and pounds per ton (lb/ton) of product. These emission factors are averaged based on recent source test data from controlled phosphate fertilizer plants in Tampa, Florida.

Table 8.5.3-1 (Metric And English Units). AVERAGE CONTROLLED EMISSION FACTORS FOR THE PRODUCTION OF AMMONIUM PHOSPHATES[a]

EMISSION FACTOR RATING: E (except as noted)

	Fluoride as F		Particulate		Ammonia		SO_2	
Emission Point	kg/Mg Of Product	lb/ton Of Product	kg/Mg Of Product	lb/ton Of Product	kg/Mg Of Product	lb/ton Of Product	kg/Mg Of Product	lb/ton Of Product
Reactor/ ammoniator - granulator	0.02	0.05	0.76	1.52	ND	ND	NA	NA
Dryer/cooler	0.02	0.04	0.75	1.50	NA	NA	NA	NA
Product sizing and material transfer[b]	0.001	0.002	0.03	0.06	NA	NA	NA	NA
Total plant emissions	0.02[c]	0.04[c]	0.34[d]	0.68[d]	0.07	0.14	0.04[e]	0.08[e]

[a] Reference 1, pp. 80-83, 173. ND = no data. NA = not applicable.
[b] Represents only 1 sample.
[c] References 7-8,10-11,13-15. EMISSION FACTOR RATING: A. EPA has promulgated a fluoride emission guideline of 0.03 kg/Mg (0.06 lb/ton) P_2O_5 input.
[d] References 7-9,10,13-15. EMISSION FACTOR RATING: A.
[e] Based on limited data from only one plant, Reference 9.

Exhaust streams from the reactor and ammoniator-granulator pass through a primary scrubber, in which phosphoric acid is used to recover ammonia and particulate. Exhaust gases from

the dryer, cooler, and screen first go to cyclones for particulate recovery, and then to primary scrubbers. Materials collected in the cyclone and primary scrubbers are returned to the process. The exhaust is sent to secondary scrubbers, where recycled gypsum pond water is used as a scrubbing liquid to control fluoride emissions. The scrubber effluent is returned to the gypsum pond.

Primary scrubbing equipment commonly includes venturi and cyclonic spray towers. Impingement scrubbers and spray-crossflow packed bed scrubbers are used as secondary controls. Primary scrubbers generally use phosphoric acid of 20 to 30 percent as scrubbing liquor, principally to recover ammonia. Secondary scrubbers generally use gypsum and pond water for fluoride control.

Throughout the industry, however, there are many combinations and variations. Some plants use reactor-feed concentration phosphoric acid (40 percent phosphorous pentoxide [P_2O_5]) in both primary and secondary scrubbers, and some use phosphoric acid near the dilute end of the 20 to 30 percent P_2O_5 range in only a single scrubber. Existing plants are equipped with ammonia recovery scrubbers on the reactor, ammoniator-granulator and dryer, and particulate controls on the dryer and cooler. Additional scrubbers for fluoride removal exist, but they are not typical. Only 15 to 20 percent of installations contacted in an EPA survey were equipped with spray-crossflow packed bed scrubbers or their equivalent for fluoride removal.

Emission control efficiencies for ammonium phosphate plant control equipment are reported as 94 to 99 percent for ammonium, 75 to 99.8 percent for particulates, and 74 to 94 percent for fluorides.

References For Section 8.5.3

1. J. M. Nyers, *et al.*, *Source Assessment: Phosphate Fertilizer Industry*, EPA-600/2-79-019c, U. S. Environmental Protection Agency, Cinncinnati, OH, May 1979.

2. North American Fertilizer Capacity Data, Tennessee Valley Authority, Muscle Shoals, AL, December 1991.

3. *Compliance Source Test Report: Texasgulf Inc., Granular Triple Super Phosphate Plant*, Aurora, NC, May 1987.

4. *Compliance Source Test Report: Texasgulf Inc., Diammonium Phosphate Plant No.2*, Aurora, NC, August 1989.

5. *Compliance Source Test Report: Texasgulf Inc., Diammonium Phosphate Plant #2*, Aurora, NC, December 1991.

6. *Compliance Source Test Report: Texasgulf, Inc., Diammonium Phosphate #1*, Aurora, NC, September 1990.

7. *Compliance Source Test Report: Texasgulf Inc., Ammonium Phosphate Plant #2*, Aurora, NC, November 1990.

8. *Compliance Source Test Report: Texasgulf Inc., Diammonium Phosphate Plant #2*, Aurora, NC, November 1991.

9. *Compliance Source Test Report: IMC Fertilizer, Inc., #1 DAP Plant*, Western Polk County, FL, October 1991.

10. *Compliance Source Test Report: IMC Fertilizer, Inc., #2 DAP Plant*, Western Polk County, FL, June 1991.

11. *Compliance Source Test Report: IMC Fertilizer, Inc.*, Western Polk County, FL, April 1991.

8.6 Hydrochloric Acid

8.6.1 General[1]

Hydrochloric acid (HCl) is listed as a Title III Hazardous Air Pollutant. Hydrochloric acid is a versatile chemical used in a variety of chemical processes, including hydrometallurgical processing (e. g., production of alumina and/or titanium dioxide), chlorine dioxide synthesis, hydrogen production, activation of petroleum wells, and miscellaneous cleaning/etching operations including metal cleaning (e. g., steel pickling). Also known as muriatic acid, HCl is used by masons to clean finished brick work, is also a common ingredient in many reactions, and is the preferred acid for catalyzing organic processes. One example is a carbohydrate reaction promoted by hydrochloric acid, analogous to those in the digestive tracts of mammals.

Hydrochloric acid may be manufactured by several different processes, although over 90 percent of the HCl produced in the U. S. is a byproduct of the chlorination reaction. Currently, U. S. facilities produce approximately 2.3 million megagrams (Mg) (2.5 million tons) of HCl annually, a slight decrease from the 2.5 million Mg (2.8 million tons) produced in 1985.

8.6.2 Process Description[1-4]

Hydrochloric acid can be produced by 1 of the 5 following processes:

1. Synthesis from elements:

$$H_2 + Cl_2 \rightarrow 2HCl \tag{1}$$

2. Reaction of metallic chlorides, particularly sodium chloride (NaCl), with sulfuric acid (H_2SO_4) or a hydrogen sulfate:

$$NaCl + H_2SO_4 \rightarrow NaHSO_4 + HCl \tag{2}$$

$$NaCl + NaHSO_4 \rightarrow Na_2SO_4 + HCl \tag{3}$$

$$2NaCl + H_2SO_4 \rightarrow Na_2SO_4 + 2HCl \tag{4}$$

3. As a byproduct of chlorination, e. g., in the production of dichloromethane, trichloroethylene, perchloroethylene, or vinyl chloride:

$$C_2H_4 + Cl_2 \rightarrow C_2H_4Cl_2 \tag{5}$$

$$C_2H_4Cl_2 \rightarrow C_2H_3Cl + HCl \tag{6}$$

4. By thermal decomposition of the hydrated heavy-metal chlorides from spent pickle liquor in metal treatment:

$$2FeCl_3 + 6H_2O \rightarrow Fe_2O_3 + 3H_2O + 6HCl \tag{7}$$

5. From incineration of chlorinated organic waste:

$$C_4H_6Cl_2 + 5O_2 \rightarrow 4CO_2 + 2H_2O + 2HCl \quad (8)$$

Figure 8.6-1 is a simplified diagram of the steps used for the production of byproduct HCl from the chlorination process.

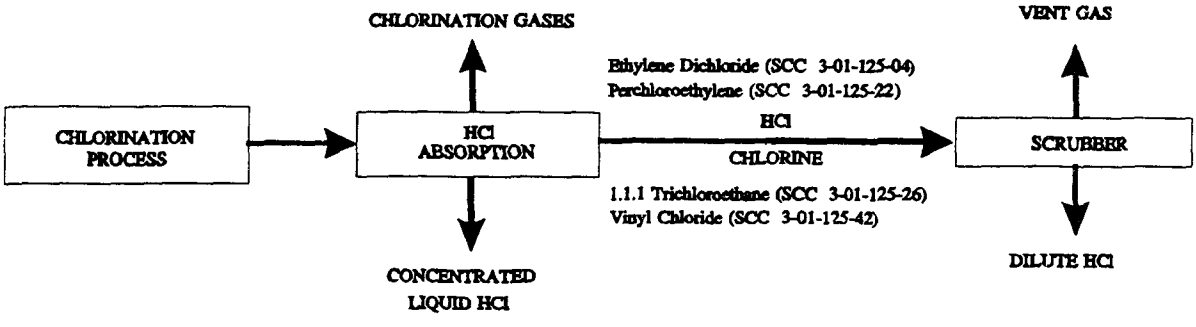

Figure 8.6-1. HCl production from chlorination process.
(SCC = Source Classification Code.)

After leaving the chlorination process, the HCl-containing gas stream proceeds to the absorption column, where concentrated liquid HCl is produced by absorption of HCl vapors into a weak solution of hydrochloric acid. The HCl-free chlorination gases are removed for further processing. The liquid acid is then either sold or used elsewhere in the plant. The final gas stream is sent to a scrubber to remove the remaining HCl prior to venting.

8.6.3 Emissions[4,5]

According to a 1985 emission inventory, over 89 percent of all HCl emitted to the atmosphere resulted from the combustion of coal. Less than 1 percent of the HCl emissions came from the direct production of HCl. Emissions from HCl production result primarily from gas exiting the HCl purification system. The contaminants are HCl gas, chlorine, and chlorinated organic compounds. Emissions data are only available for HCl gas. Table 8.6-1 lists estimated emission factors for systems with and without final scrubbers. Units are expressed in terms of kilograms per megagram (kg/Mg) and pounds per ton.

Table 8.6-1 (Metric And English Units). EMISSION FACTORS FOR HYDROCHLORIC ACID MANUFACTURE[a]

EMISSION FACTOR RATING: E

Byproduct Hydrochloric Acid Process	HCl Emissions	
	kg/Mg HCl Produced	lb/ton HCl Produced
With final scrubber (SCC 3-01-011-99)[b]	0.08	0.15
Without final scrubber (SCC 3-01-011-99)[b]	0.90	1.8

[a] Reference 5. SCC = Source Classification Code.

[b] This SCC is appropriate only when no other SCC is more appropriate. If HCl is produced as a byproduct of another process such as the production of dichloromethane, trichloroethane, perchloroethylene, or vinyl chloride then the emission factor and SCC appropriate for that process vent should be used.

References For Section 8.6

1. *Encyclopedia Of Chemical Technology, Third Edition*, Volume 12, John Wiley and Sons, New York, 1978.

2. *Ullmann's Encyclopedia Of Industrial Chemistry, Volume A*, VCH Publishers, New York, 1989.

3. *Encyclopedia Of Chemical Processing And Design*, Marcel Dekker, Inc., New York, 1987.

4. *Hydrogen Chloride And Hydrogen Fluoride Emission Factors For The NAPAP (National Acid Precipitation Assessment Program) Emission Inventory*, U. S. Environmental Protection Agency, Research Triangle Park, NC, October 1985.

5. *Atmospheric Emissions From Hydrochloric Acid Manufacturing Processes*, AP-54, U. S. Environmental Protection Agency, Research Triangle Park, NC, September 1969.

8.7 Hydrofluoric Acid

8.7.1 General[5-6]

Hydrogen fluoride (HF) is listed as a Title III Hazardous Air Pollutant. Hydrogen fluoride is produced in 2 forms, as anhydrous hydrogen fluoride and as aqueous hydrofluoric acid. The predominant form manufactured is hydrogen fluoride, a colorless liquid or gas that fumes on contact with air and is water soluble.

Traditionally, hydrofluoric acid has been used to etch and polish glass. Currently, the largest use for HF is in aluminum production. Other HF uses include uranium processing, petroleum alkylation, and stainless steel pickling. Hydrofluoric acid is also used to produce fluorocarbons used in aerosol sprays and in refrigerants. Although fluorocarbons are heavily regulated due to environmental concerns, other applications for fluorocarbons include manufacturing of resins, solvents, stain removers, surfactants, and pharmaceuticals.

8.7.2 Process Description[1-3,6]

Hydrofluoric acid is manufactured by the reaction of acid-grade fluorspar (CaF_2) with sulfuric acid (H_2SO_4) as shown below:

$$CaF_2 + H_2SO_4 \rightarrow CaSO_4 + 2HF$$

A typical HF plant is shown schematically in Figure 8.7-1. The endothermic reaction requires 30 to 60 minutes in horizontal rotary kilns externally heated to 200 to 250°C (390 to 480°F). Dry fluorspar ("spar") and a slight excess of sulfuric acid are fed continuously to the front end of a stationary prereactor or directly to the kiln by a screw conveyor. The prereactor mixes the components prior to charging to the rotary kiln. Calcium sulfate ($CaSO_4$) is removed through an air lock at the opposite end of the kiln. The gaseous reaction products—hydrogen fluoride and excess H_2SO_4 from the primary reaction and silicon tetrafluoride (SiF_4), sulfur dioxide (SO_2), carbon dioxide (CO_2), and water produced in secondary reactions—are removed from the front end of the kiln along with entrained particulate. The particulates are removed from the gas stream by a dust separator and returned to the kiln. Sulfuric acid and water are removed by a precondenser. Hydrogen fluoride vapors are then condensed in refrigerant condensers forming "crude HF", which is removed to intermediate storage tanks. The remaining gas stream passes through a sulfuric acid absorption tower or acid scrubber, removing most of the remaining hydrogen fluoride and some residual sulfuric acid, which are also placed in intermediate storage. The gases exiting the scrubber then pass through water scrubbers, where the SiF_4 and remaining HF are recovered as fluosilicic acid (H_2SiF_6). The water scrubber tailgases are passed through a caustic scrubber before being released to the atmosphere. The hydrogen fluoride and sulfuric acid are delivered from intermediate storage tanks to distillation columns, where the hydrofluoric acid is extracted at 99.98 percent purity. Weaker concentrations (typically 70 to 80 percent) are prepared by dilution with water.

8.7.3 Emissions And Controls[1-2,4]

Emission factors for various HF process operations are shown in Tables 8.7-1 and 8.7-2. Units are expressed in terms of kilograms per megagram (kg/Mg) and pounds per ton (lb/ton) Emissions are suppressed to a great extent by the condensing, scrubbing, and absorption equipment used in the recovery and purification of the hydrofluoric and fluosilicic acid products. Particulate

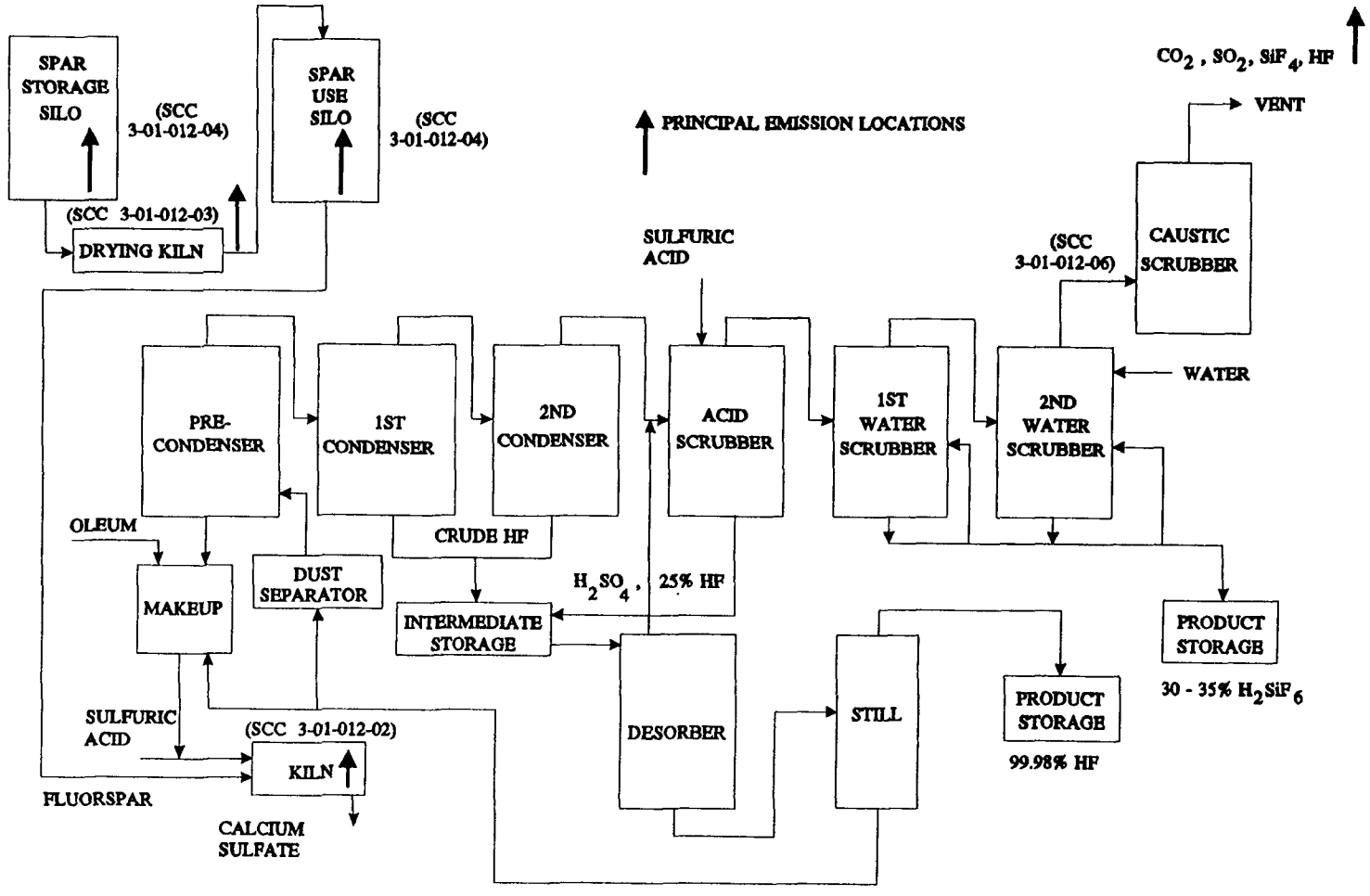

Figure 8.7-1. Hydrofluoric acid process flow diagram.
(Source Classification Codes in parentheses.)

Table 8.7-1 (Metric Units). EMISSION FACTORS FOR HYDROFLUORIC ACID MANUFACTURE[a]

EMISSION FACTOR RATING: E

Operation And Controls	Control Efficiency (%)	Emissions	
		Gases	Particulate (Spar)
		kg/Mg Acid Produced	kg/Mg Fluorspar Produced
Spar drying[b] (SCC 3-01-012-03)			
Uncontrolled	0	ND	37.5
Fabric filter	99	ND	0.4
Spar handling silos[c] (SCC 3-01-012-04)			
Uncontrolled	0	NA	30.0
Fabric filter	99	NA	0.3
Transfer operations (SCC 3-01-012-05)			
Uncontrolled	0	NA	
Covers, additives	80	NA	3.0
			0.6
Tailgas[d] (SCC 3-01-012-06)			
Uncontrolled	0	12.5 (HF)	ND
		15.0 (SiF_4)	ND
		22.5 (SO_2)	ND
Caustic scrubber	99	0.1 (HF)	ND
		0.2 (SiF_4)	ND
		0.3 (SO_2)	ND

[a] SCC = Source Classification Code. ND = no data. NA = not applicable.

[b] Reference 1. Averaged from information provided by 4 plants. Hourly fluorspar input calculated from reported 1975 year capacity, assuming stoichiometric amount of calcium fluoride and 97.5% content in fluorspar. Hourly emission rates calculated from reported baghouse controlled rates. Values averaged are as follows:

Plant	1975 HF Capacity (Mg)	Emissions Fluorspar (kg/Mg)
1	13,600	53
2	18,100	65
3	45,400	21
4	10,000	15

[c] Reference 1. Four plants averaged for silo emissions, 2 plants for transfer operations emissions.

[d] Three plants averaged from Reference 1. Hydrogen fluoride and SiF_4 factors from Reference 4.

Table 8.7-2 (English Units). EMISSION FACTORS FOR HYDROFLUORIC ACID MANUFACTURE[a]

EMISSION FACTOR RATING: E

Operation And Control	Control Efficiency (%)	Emissions	
		Gases	Particulate (Spar)
		lb/ton Acid Produced	lb/ton Fluorspar Produced
Spar drying[b] (SCC 3-01-012-03)			
Uncontrolled	0	ND	75.0
Fabric filter	99	ND	0.8
Spar handling silos[c] (SCC 3-01-012-04)			
Uncontrolled	0	NA	60.0
Fabric Filter	99	NA	0.6
Transfer operations (SCC 3-01-012-05)			
Uncontrolled	0	NA	6.0
Covers, additives	80	NA	1.2
Tailgas[d] (SCC 3-01-012-06)			
Uncontrolled	0	25.0 (HF)	ND
		30.0 (SiF_4)	ND
		45.0 (SO_2)	ND
Caustic scrubber	99	0.2 (HF)	ND
		0.3 (SiF_4)	ND
		0.5 (SO_2)	ND

[a] SCC = Source Classification Code. ND = no data. NA = not applicable.

[b] Reference 1. Averaged from information provided by 4 plants. Hourly fluorspar input calculated from reported 1975 year capacity, assuming stoichiometric amount of calcium fluoride and 97.5% content in fluorspar. Hourly emission rates calculated from reported baghouse controlled rates. Values averaged are as follows:

Plant	1975 HF Capacity (tons)	Emissions Fluorspar (lb/ton)
1	15,000	106
2	20,000	130
3	50,000	42
4	11,000	30

[c] Reference 1. Four plants averaged for silo emissions, 2 plants for transfer operations emissions.

[d] Three plants averaged from Reference 1. Hydrogen fluoride and SiF_4 factors from Reference 4.

in the gas stream is controlled by a dust separator near the outlet of the kiln and is recycled to the kiln for further processing. The precondenser removes water vapor and sulfuric acid mist, and the condensers, acid scrubber, and water scrubbers remove all but small amounts of HF, SiF_4, SO_2, and CO_2 from the tailgas. A caustic scrubber is employed to further reduce the levels of these pollutants in the tailgas.

Particulates are emitted during handling and drying of the fluorspar. They are controlled with bag filters at the spar silos and drying kilns. Fugitive dust emissions from spar handling and storage are controlled with flexible coverings and chemical additives.

Hydrogen fluoride emissions are minimized by maintaining a slight negative pressure in the kiln during normal operations. Under upset conditions, a standby caustic scrubber or a bypass to the tail caustic scrubber are used to control HF emissions from the kiln.

References For Section 8.7

1. *Screening Study On Feasibility Of Standards Of Performance For Hydrofluoric Acid Manufacture*, EPA-450/3-78-109, U. S. Environmental Protection Agency, Research Triangle Park, NC, October 1978.

2. "Hydrofluoric Acid", *Kirk-Othmer Encyclopedia Of Chemical Technology*, Interscience Publishers, New York, 1965.

3. W. R. Rogers and K. Muller, "Hydrofluoric Acid Manufacture", *Chemical Engineering Progress*, *59*(5): 85-8, May 1963.

4. J. M. Robinson, *et al.*, *Engineering And Cost Effectiveness Study Of Fluoride Emissions Control, Vol. 1*, PB 207 506, National Technical Information Service, Springfield, VA, 1972.

5. "Fluorine", *Encyclopedia Of Chemical Processing And Design*, Marcel Dekker, Inc., New York, 1985.

6. "Fluorine Compounds, Inorganic", *Kirk-Othmer Encyclopedia Of Chemical Technology*, John Wiley & Sons, New York, 1980.

8.8 Nitric Acid

8.8.1 General[1-2]

In 1991, there were approximately 65 nitric acid (HNO_3) manufacturing plants in the U. S. with a total capacity of 11 million tons of HNO_3 per year. The plants range in size from 6,000 to 700,000 tons per year. About 70 percent of the nitric acid produced is consumed as an intermediate in the manufacture of ammonium nitrate (NH_4NO_3), which in turn is used in fertilizers. The majority of the nitric acid plants are located in agricultural regions such as the Midwest, South Central, and Gulf States because of the high demand for fertilizer in these areas. Another 5 to 10 percent of the nitric acid produced is used for organic oxidation in adipic acid manufacturing. Nitric acid is also used in organic oxidation to manufacture terephthalic acid and other organic compounds. Explosive manufacturing utilizes nitric acid for organic nitrations. Nitric acid nitrations are used in producing nitrobenzene, dinitrotoluenes, and other chemical intermediates.[1] Other end uses of nitric acid are gold and silver separation, military munitions, steel and brass pickling, photoengraving, and acidulation of phosphate rock.

8.8.2 Process Description[1,3-4]

Nitric acid is produced by 2 methods. The first method utilizes oxidation, condensation, and absorption to produce a weak nitric acid. Weak nitric acid can have concentrations ranging from 30 to 70 percent nitric acid. The second method combines dehydrating, bleaching, condensing, and absorption to produce a high-strength nitric acid from a weak nitric acid. High-strength nitric acid generally contains more than 90 percent nitric acid. The following text provides more specific details for each of these processes.

8.8.2.1 Weak Nitric Acid Production[1,3-4] -

Nearly all the nitric acid produced in the U. S. is manufactured by the high-temperature catalytic oxidation of ammonia as shown schematically in Figure 8.8-1. This process typically consists of 3 steps: (1) ammonia oxidation, (2) nitric oxide oxidation, and (3) absorption. Each step corresponds to a distinct chemical reaction.

Ammonia Oxidation -

First, a 1:9 ammonia/air mixture is oxidized at a temperature of 1380 to 1470°F as it passes through a catalytic convertor, according to the following reaction:

$$4NH_3 + 5O_2 \rightarrow 4NO + 6H_2O \qquad (1)$$

The most commonly used catalyst is made of 90 percent platinum and 10 percent rhodium gauze constructed from squares of fine wire. Under these conditions the oxidation of ammonia to nitric oxide (NO) proceeds in an exothermic reaction with a range of 93 to 98 percent yield. Oxidation temperatures can vary from 1380 to 1650°F. Higher catalyst temperatures increase reaction selectivity toward NO production. Lower catalyst temperatures tend to be more selective toward less useful products: nitrogen (N_2) and nitrous oxide (N_2O). Nitric oxide is considered to be a criteria pollutant and nitrous oxide is known to be a global warming gas. The nitrogen dioxide/dimer mixture then passes through a waste heat boiler and a platinum filter.

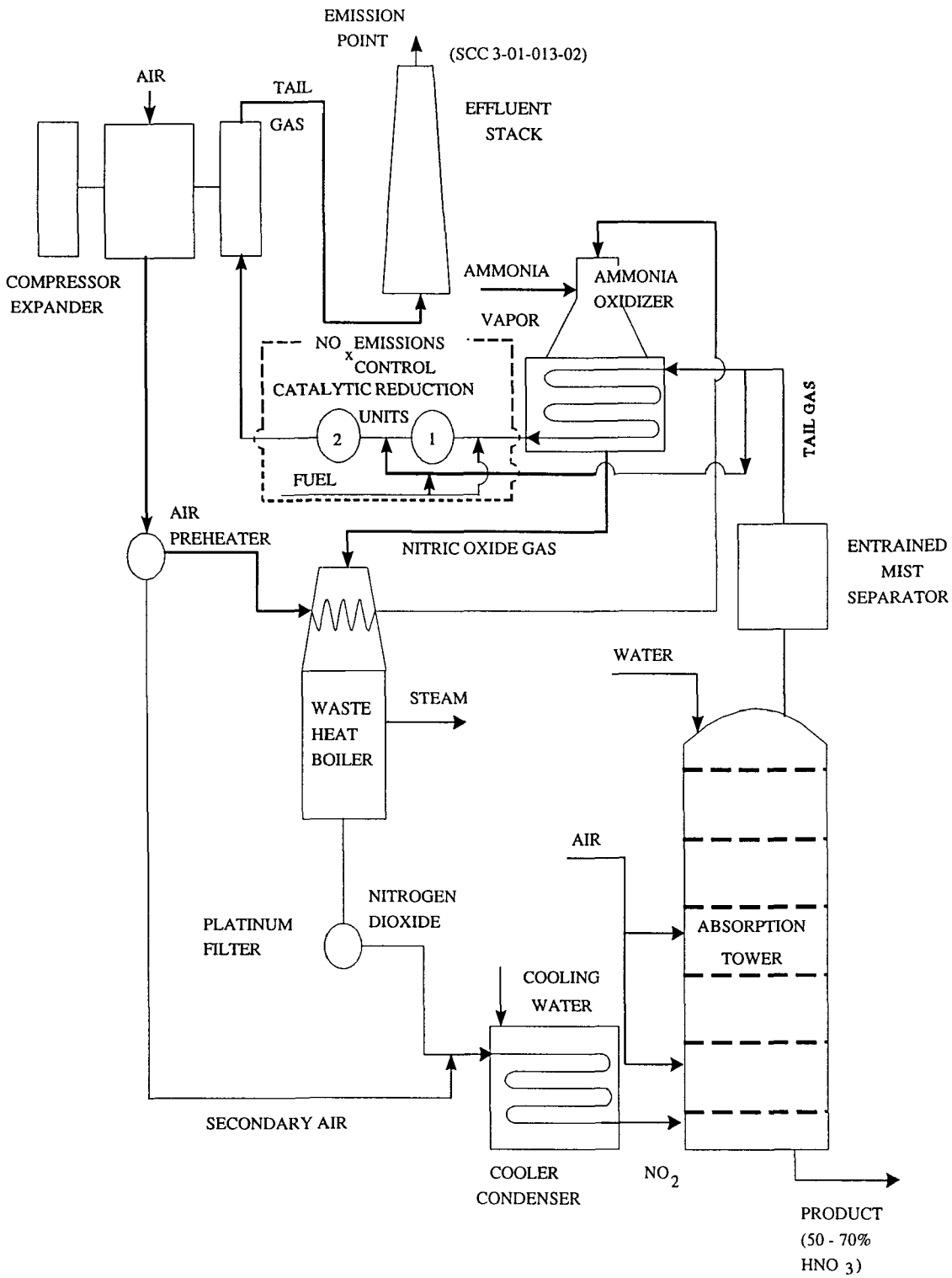

Figure 8.8-1. Flow diagram of typical nitric acid plant using single-pressure process (high-strength acid unit not shown). (Source Classification Codes in parentheses.)

Nitric Oxide Oxidation -

The nitric oxide formed during the ammonia oxidation must be oxidized. The process stream is passed through a cooler/condenser and cooled to 100°F or less at pressures up to 116 pounds per square inch absolute (psia). The nitric oxide reacts noncatalytically with residual oxygen to form nitrogen dioxide (NO_2) and its liquid dimer, nitrogen tetroxide:

$$2NO + O_2 \rightarrow 2NO_2 \leftrightarrows N_2O_4 \qquad (2)$$

This slow, homogeneous reaction is highly temperature- and pressure-dependent. Operating at low temperatures and high pressures promotes maximum production of NO_2 within a minimum reaction time.

Absorption -

The final step introduces the nitrogen dioxide/dimer mixture into an absorption process after being cooled. The mixture is pumped into the bottom of the absorption tower, while liquid dinitrogen tetroxide is added at a higher point. Deionized process water enters the top of the column. Both liquids flow countercurrent to the nitrogen dioxide/dimer gas mixture. Oxidation takes place in the free space between the trays, while absorption occurs on the trays. The absorption trays are usually sieve or bubble cap trays. The exothermic reaction occurs as follows:

$$3NO_2 + H_2O \rightarrow 2HNO_3 + NO \qquad (3)$$

A secondary air stream is introduced into the column to re-oxidize the NO that is formed in Reaction 3. This secondary air also removes NO_2 from the product acid. An aqueous solution of 55 to 65 percent (typically) nitric acid is withdrawn from the bottom of the tower. The acid concentration can vary from 30 to 70 percent nitric acid. The acid concentration depends upon the temperature, pressure, number of absorption stages, and concentration of nitrogen oxides entering the absorber.

There are 2 basic types of systems used to produce weak nitric acid: (1) single-stage pressure process, and (2) dual-stage pressure process. In the past, nitric acid plants have been operated at a single pressure, ranging from atmospheric pressure to 14.7 to 203 psia. However, since Reaction 1 is favored by low pressures and Reactions 2 and 3 are favored by higher pressures, newer plants tend to operate a dual-stage pressure system, incorporating a compressor between the ammonia oxidizer and the condenser. The oxidation reaction is carried out at pressures from slightly negative to about 58 psia, and the absorption reactions are carried out at 116 to 203 psia.

In the dual-stage pressure system, the nitric acid formed in the absorber (bottoms) is usually sent to an external bleacher where air is used to remove (bleach) any dissolved oxides of nitrogen. The bleacher gases are then compressed and passed through the absorber. The absorber tail gas (distillate) is sent to an entrainment separator for acid mist removal. Next, the tail gas is reheated in the ammonia oxidation heat exchanger to approximately 392°F. The final step expands the gas in the power-recovery turbine. The thermal energy produced in this turbine can be used to drive the compressor.

8.8.2.2 High-Strength Nitric Acid Production[1,3] -

A high-strength nitric acid (98 to 99 percent concentration) can be obtained by concentrating the weak nitric acid (30 to 70 percent concentration) using extractive distillation. The weak nitric acid cannot be concentrated by simple fractional distillation. The distillation must be carried out in the presence of a dehydrating agent. Concentrated sulfuric acid (typically 60 percent sulfuric acid) is most commonly used for this purpose. The nitric acid concentration process consists of feeding strong sulfuric acid and 55 to 65 percent nitric acid to the top of a packed dehydrating column at approximately atmospheric pressure. The acid mixture flows downward, countercurrent to ascending vapors. Concentrated nitric acid leaves the top of the column as 99 percent vapor, containing a small amount of NO_2 and oxygen (O_2) resulting from dissociation of nitric acid. The concentrated acid vapor leaves the column and goes to a bleacher and a countercurrent condenser system to effect the condensation of strong nitric acid and the separation of oxygen

and oxides of nitrogen (NO_x) byproducts. These byproducts then flow to an absorption column where the nitric oxide mixes with auxiliary air to form NO_2, which is recovered as weak nitric acid. Inert and unreacted gases are vented to the atmosphere from the top of the absorption column. Emissions from this process are relatively minor. A small absorber can be used to recover NO_2. Figure 8.8-2 presents a flow diagram of high-strength nitric acid production from weak nitric acid.

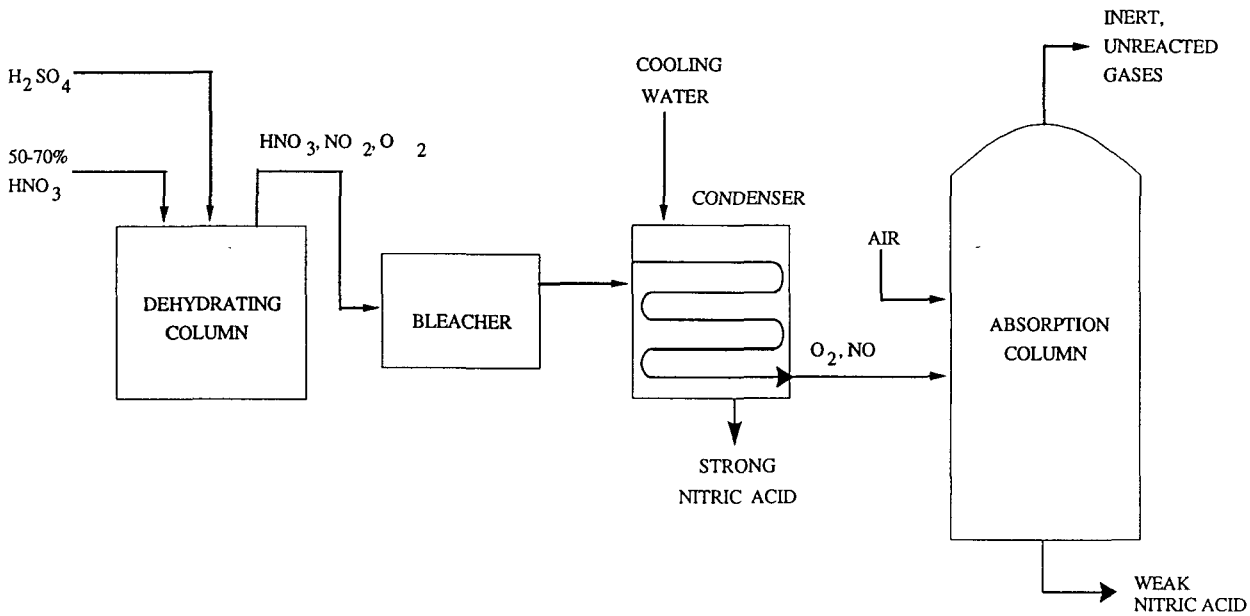

Figure 8.8-2. Flow diagram of high-strength nitric acid production from weak nitric acid.

8.8.3 Emissions And Controls[3-5]

Emissions from nitric acid manufacture consist primarily of NO, NO_2 (which account for visible emissions), trace amounts of HNO_3 mist, and ammonia (NH_3). By far, the major source of nitrogen oxides (NO_x) is the tailgas from the acid absorption tower. In general, the quantity of NO_x emissions is directly related to the kinetics of the nitric acid formation reaction and absorption tower design. NO_x emissions can increase when there is (1) insufficient air supply to the oxidizer and absorber, (2) low pressure, especially in the absorber, (3) high temperatures in the cooler-condenser and absorber, (4) production of an excessively high-strength product acid, (5) operation at high throughput rates, and (6) faulty equipment such as compressors or pumps that lead to lower pressures and leaks, and decrease plant efficiency.

The 2 most common techniques used to control absorption tower tail gas emissions are extended absorption and catalytic reduction. Extended absorption reduces NO_x emissions by increasing the efficiency of the existing process absorption tower or incorporating an additional absorption tower. An efficiency increase is achieved by increasing the number of absorber trays, operating the absorber at higher pressures, or cooling the weak acid liquid in the absorber. The existing tower can also be replaced with a single tower of a larger diameter and/or additional trays. See Reference 5 for the relevant equations.

In the catalytic reduction process (often termed catalytic oxidation or incineration), tail gases from the absorption tower are heated to ignition temperature, mixed with fuel (natural gas, hydrogen, propane, butane, naphtha, carbon monoxide, or ammonia) and passed over a catalyst bed. In the presence of the catalyst, the fuels are oxidized and the NO_x are reduced to N_2. The extent of reduction of NO_2 and NO to N_2 is a function of plant design, fuel type, operating temperature and pressure, space velocity through the

reduction catalytic reactor, type of catalyst, and reactant concentration. Catalytic reduction can be used in conjunction with other NO_x emission controls. Other advantages include the capability to operate at any pressure and the option of heat recovery to provide energy for process compression as well as extra steam. Catalytic reduction can achieve greater NO_x reduction than extended absorption. However, high fuel costs have caused a decline in its use.

Two seldom-used alternative control devices for absorber tailgas are molecular sieves and wet scrubbers. In the molecular sieve adsorption technique, tailgas is contacted with an active molecular sieve that catalytically oxidizes NO to NO_2 and selectively adsorbs the NO_2. The NO_2 is then thermally stripped from the molecular sieve and returned to the absorber. Molecular sieve adsorption has successfully controlled NO_x emissions in existing plants. However, many new plants elect not to install this method of control because its implementation incurs high capital and energy costs. Molecular sieve adsorption is a cyclic system, whereas most new nitric acid plants are continuous systems. Sieve bed fouling can also cause problems.

Wet scrubbers use an aqueous solution of alkali hydroxides or carbonates, ammonia, urea, potassium permanganate, or caustic chemicals to "scrub" NO_x from the absorber tailgas. The NO and NO_2 are absorbed and recovered as nitrate or nitrate salts. When caustic chemicals are used, the wet scrubber is referred to as a caustic scrubber. Some of the caustic chemicals used are solutions of sodium hydroxide, sodium carbonate, or other strong bases that will absorb NO_x in the form of nitrate or nitrate salts. Although caustic scrubbing can be an effective control device, it is often not used due to its incurred high costs and the necessity of treating its spent scrubbing solution.

Comparatively small amounts of nitrogen oxides are also lost from acid concentrating plants. These losses (mostly NO_2) are from the condenser system, but the emissions are small enough to be controlled easily by inexpensive absorbers.

Acid mist emissions do not occur from the tailgas of a properly operated plant. The small amounts that may be present in the absorber exit gas streams are removed by a separator or collector prior to entering the catalytic reduction unit or expander.

The acid production system and storage tanks are the only significant sources of visible emissions at most nitric acid plants. Emissions from acid storage tanks may occur during tank filling.

Nitrogen oxides and N_2O emission factors shown in Table 8.8-1 vary considerably with the type of control employed and with process conditions. For comparison purposes, the New Source Performance Standard on nitrogen emissions expressed as NO_2 for both new and modified plants is 3.0 pounds of NO_2 emitted per ton (lb/ton) of 100 percent nitric acid produced.

8.8.4 Changes Since July, 1993

- Reformatted for the Fifth Edition, released in January 1995
- Supplement D update (February 1998) - added a N_2O emission factor for weak acid plant tailgas.

Table 8.8-1. NITROGEN OXIDE EMISSIONS FROM NITRIC ACID PLANTS

EMISSION FACTOR RATING: E

Source	Control Efficiency %	NO_x, lb/ton Nitric Acid Produced[a]	N_2O, lb/ton Nitric Acid Produced[m]
Weak acid plant tailgas			
Uncontrolled[b,c]	0	57	11.70
Catalytic reduction[c]			
Natural gas[d]	99.1	0.4	ND
Hydrogen[e]	97 - 98.5	0.8	ND
Natural gas/hydrogen (25%/75%)[f]	98 - 98.5	0.9	ND
Extended absorption			
Single-stage process[g]	95.8	1.9	ND
Dual-stage process[h]		2.1	ND
Chilled absorption and caustic scrubber[j]	ND	2.2	ND
High-strength acid plant[k]	ND	10	ND

[a] Assumes 100% acid. Production rates are in terms of total weight of product (water and acid). A plant producing 500 tons per day of 55 weight % nitric acid is calculated as producing 275 tons/day of 100% acid. To convert lb/ton to kg/Mg, multiply by 0.5. ND = no data.

[b] Reference 6. Based on a study of 12 plants, with average production rate of 230 tons (100% HNO_3)/day (range 55 - 750 tons) at average rated capacity of 97% (range 72 - 100%).

[c] Single-stage pressure process.

[d] Reference 4. Fuel is assumed to be natural gas. Based on data from 7 plants, with average production rate of 340 tons (100% HNO_3)/day (range 55 - 1077 tons).

[e] Reference 6. Based on data from 2 plants, with average production rate of 160 tons (100% HNO_3)/day (range 120 - 210 tons) at average rated capacity of 98% (range 95 - 100%). Average absorber exit temperature is 85°F (range 78 - 90°F), and the average exit pressure is 85 psig (range 80 - 94 psig).

[f] Reference 6. Based on data from 2 plants, with average production rate of 230 tons (100% HNO_3)/day (range 185 - 279 tons) at average rated capacity of 110% (range 100 - 119%). Average absorber exit temperature is 91°F (range 83 - 98°F), and average exit pressure is 79 psig (range 79 - 80 psig).

[g] Reference 4. Based on data from 5 plants, with average production rate of 540 tons (100%HNO_3)/day (range 210 - 1050 tons).

[h] Reference 4. Based of data from 3 plants, with average production rate of 590 tons (100% HNO_3)/day (range 315 - 940 tons).

[j] Reference 4. Based on data from 1 plant, with a production rate of 700 tons (100% HNO_3)/day.

[k] Reference 2. Based on data from 1 plant, with a production rate of 1.5 tons (100% HNO_3)/hour at 100% rated capacity, of 98% nitric acid.

[m] Reference 7.

References For Section 8.8

1. *Alternative Control Techniques Document: Nitric And Adipic Acid Manufacturing Plants*, EPA-450/3-91-026, U. S. Environmental Protection Agency, Research Triangle Park, NC, December 1991.

2. *North American Fertilizer Capacity Data*, Tennessee Valley Authority, Muscle Shoals, AL, December 1991.

3. *Standards Of Performance For Nitric Acid Plants*, 40 CFR 60 Subpart G.

4. Marvin Drabkin, *A Review Of Standards Of Performance For New Stationary Sources — Nitric Acid Plants*, EPA-450/3-79-013, U. S. Environmental Protection Agency, Research Triangle Park, NC, March 1979.

5. *Unit Operations Of Chemical Engineering*, 3rd Edition, McGraw-Hill, Inc., New York, 1976.

6. *Atmospheric Emissions From Nitric Acid Manufacturing Processes*, 999-AP-27, U. S. Department of Health, Education, And Welfare, Cincinnati, OH, December 1966.

7. R. L. Peer, *et al., Characterization Of Nitrous Oxide Emission Sources,* U. S. Environmental Protection Agency, Office of Research and Development, Research Triangle Park, NC, pp. 2-15, 1995.

8.9 Phosphoric Acid

8.9.1 General[1-2]

Phosphoric acid (H_3PO_4) is produced by 2 commercial methods: wet process and thermal process. Wet process phosphoric acid is used in fertilizer production. Thermal process phosphoric acid is of a much higher purity and is used in the manufacture of high grade chemicals, pharmaceuticals, detergents, food products, beverages, and other nonfertilizer products. In 1987, over 9 million megagrams (Mg) (9.9 million tons) of wet process phosphoric acid was produced in the form of phosphorus pentoxide (P_2O_5). Only about 363,000 Mg (400,000 tons) of P_2O_5 was produced from the thermal process. Demand for phosphoric acid has increased approximately 2.3 to 2.5 percent per year.

The production of wet process phosphoric acid generates a considerable quantity of acidic cooling water with high concentrations of phosphorus and fluoride. This excess water is collected in cooling ponds that are used to temporarily store excess precipitation for subsequent evaporation and to allow recirculation of the process water to the plant for re-use. Leachate seeping is therefore a potential source of groundwater contamination. Excess rainfall also results in water overflows from settling ponds. However, cooling water can be treated to an acceptable level of phosphorus and fluoride if discharge is necessary.

8.9.2 Process Description[3-5]

8.9.2.1 Wet Process Acid Production -

In a wet process facility (see Figure 8.9-1A and Figure 8.9-1B), phosphoric acid is produced by reacting sulfuric acid (H_2SO_4) with naturally occurring phosphate rock. The phosphate rock is dried, crushed, and then continuously fed into the reactor along with sulfuric acid. The reaction combines calcium from the phosphate rock with sulfate, forming calcium sulfate ($CaSO_4$), commonly referred to as gypsum. Gypsum is separated from the reaction solution by filtration. Facilities in the U. S. generally use a dihydrate process that produces gypsum in the form of calcium sulfate with 2 molecules of water (H_2O) ($CaSO_4 \bullet 2\ H_2O$ or calcium sulfate dihydrate). Japanese facilities use a hemihydrate process that produces calcium sulfate with a half molecule of water ($CaSO_4 \bullet \frac{1}{2}\ H_2O$). This one-step hemihydrate process has the advantage of producing wet process phosphoric acid with a higher P_2O_5 concentration and less impurities than the dihydrate process. Due to these advantages, some U. S. companies have recently converted to the hemihydrate process. However, since most wet process phosphoric acid is still produced by the dihydrate process, the hemihydrate process will not be discussed in detail here. A simplified reaction for the dihydrate process is as follow:

$$Ca_3(PO_4)_2 + 3H_2SO_4 + 6H_2O \rightarrow 2H_3PO_4 + 3[CaSO_4 \bullet 2H_2O]\downarrow \qquad (1)$$

In order to make the strongest phosphoric acid possible and to decrease evaporation costs, 93 percent sulfuric acid is normally used. Because the proper ratio of acid to rock in the reactor is critical, precise automatic process control equipment is employed in the regulation of these 2 feed streams.

During the reaction, gypsum crystals are precipitated and separated from the acid by filtration. The separated crystals must be washed thoroughly to yield at least a 99 percent recovery of the filtered phosphoric acid. After washing, the slurried gypsum is pumped into a gypsum pond for

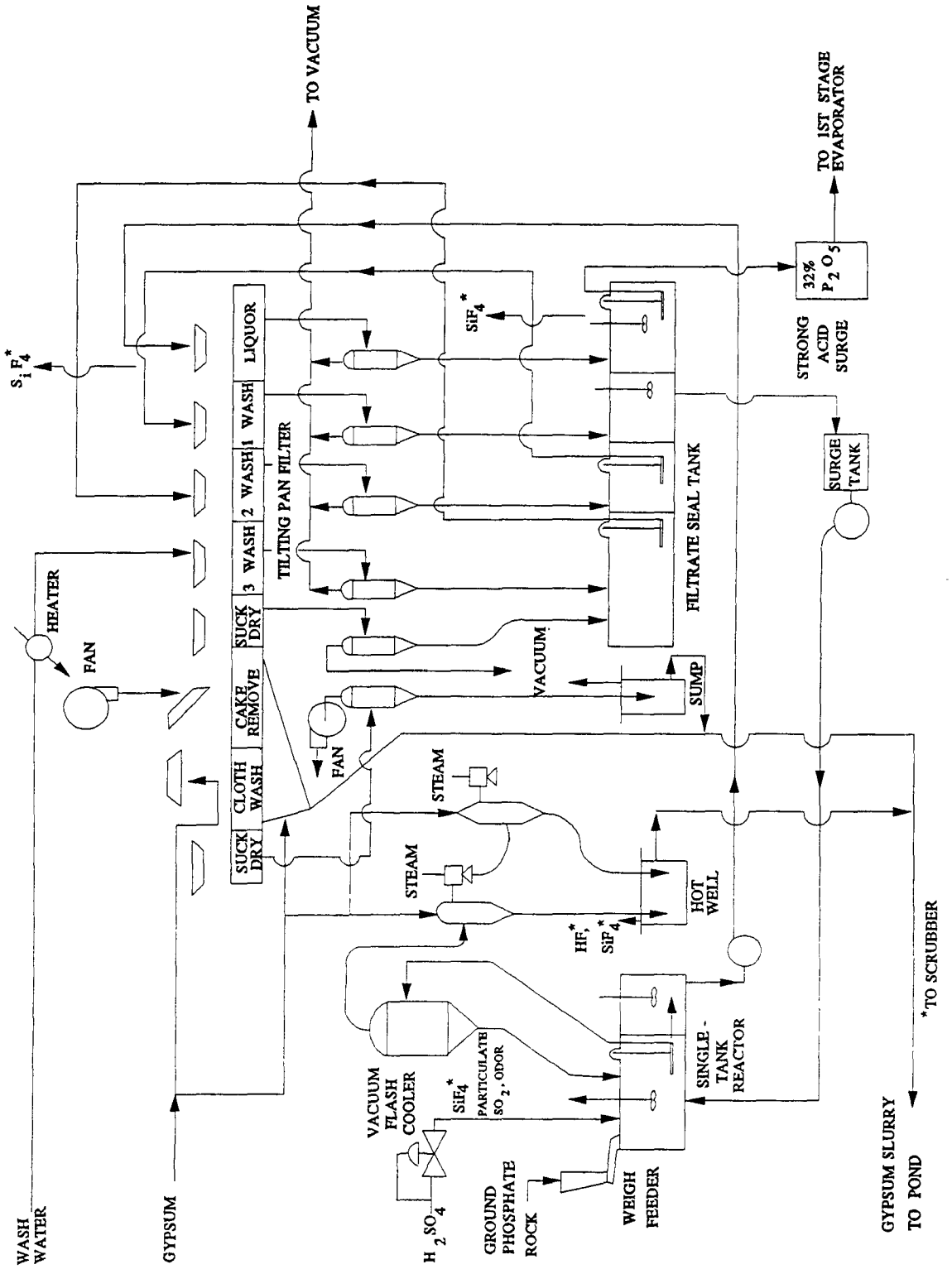

Figure 8.9-1A. Flow diagram of a wet process phosphoric acid plant.

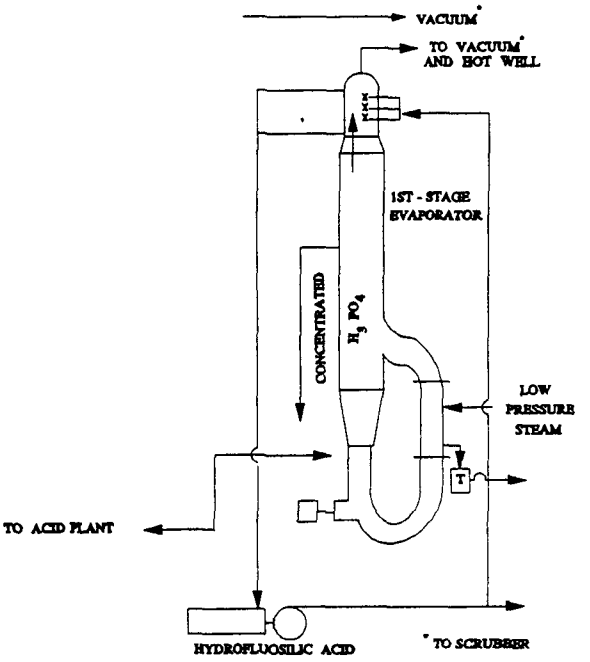

Figure 8.9-1B. Flow diagram of a wet process phosphoric acid plant (cont.).

storage. Water is syphoned off and recycled through a surge cooling pond to the phosphoric acid process. Approximately 0.3 hectares of cooling and settling pond area is required for every megagram of daily P_2O_5 capacity (0.7 acres of cooling and settling pond area for every ton of daily P_2O_5 capacity).

Considerable heat is generated in the reactor. In older plants, this heat was removed by blowing air over the hot slurry surface. Modern plants vacuum flash cool a portion of the slurry, and then recycle it back into the reactor.

Wet process phosphoric acid normally contains 26 to 30 percent P_2O_5. In most cases, the acid must be further concentrated to meet phosphate feed material specifications for fertilizer production. Depending on the types of fertilizer to be produced, phosphoric acid is usually concentrated to 40 to 55 percent P_2O_5 by using 2 or 3 vacuum evaporators.

8.9.2.2 Thermal Process Acid Production -

Raw materials for the production of phosphoric acid by the thermal process are elemental (yellow) phosphorus, air, and water. Thermal process phosphoric acid manufacture, as shown schematically in Figure 8.9-2, involves 3 major steps: (1) combustion, (2) hydration, and (3) demisting.

In combustion, the liquid elemental phosphorus is burned (oxidized) in ambient air in a combustion chamber at temperatures of 1650 to 2760°C (3000 to 5000°F) to form phosphorus pentoxide (Reaction 2). The phosphorus pentoxide is then hydrated with dilute H_3PO_4 or water to produce strong phosphoric acid liquid (Reaction 3). Demisting, the final step, removes the phosphoric acid mist from the combustion gas stream before release to the atmosphere. This is usually done with high-pressure drop demistors.

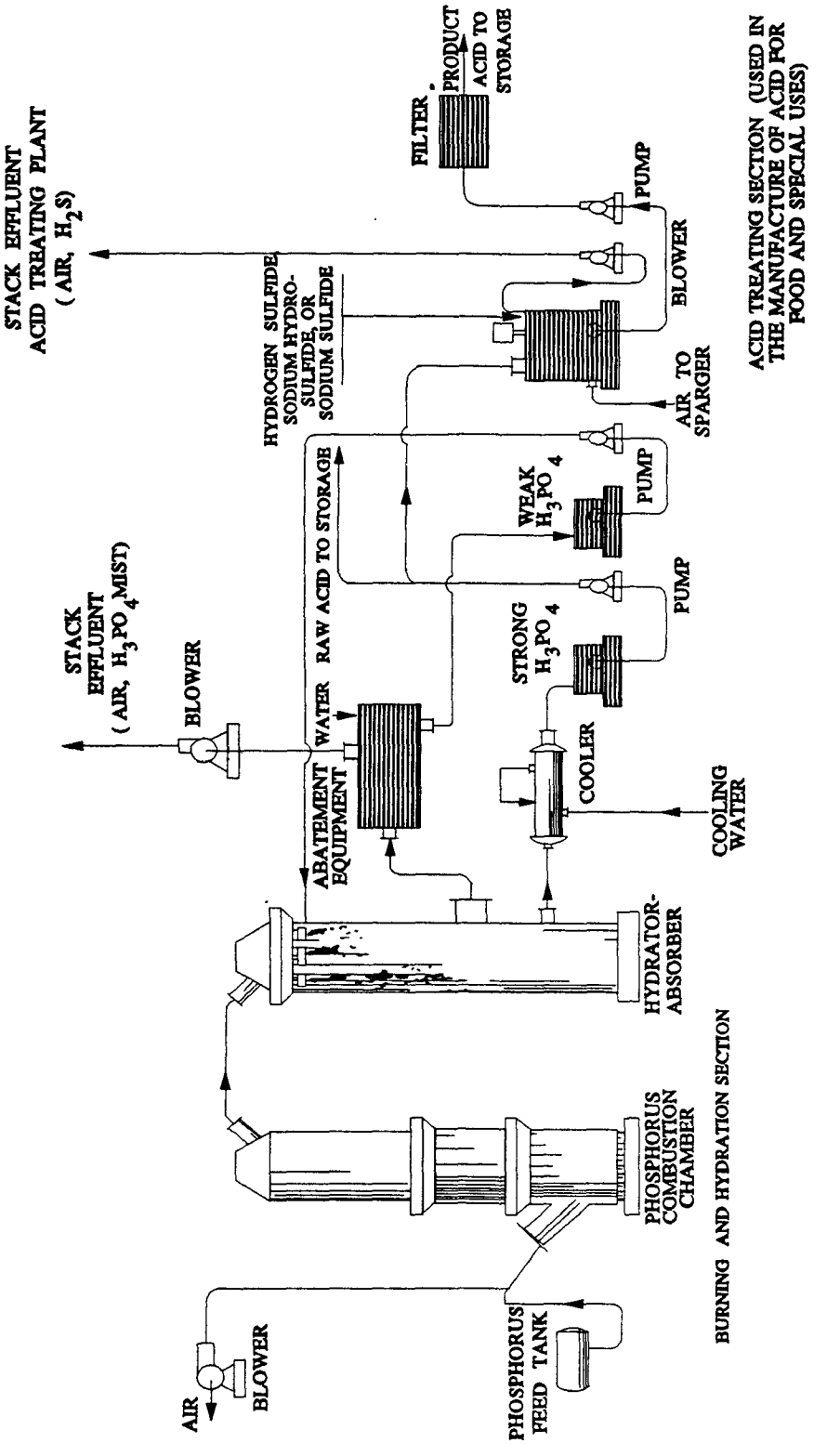

Figure 8.9-2. Flow diagram of a thermal process phosphoric acid plant.

$$P_4 + 5O_2 \rightarrow 2P_2O_5 \quad (2)$$

$$2P_2O_5 + 6H_2O \rightarrow 4H_3PO_4 \quad (3)$$

Concentration of H_3PO_4 produced from thermal process normally ranges from 75 to 85 percent. This high concentration is required for high grade chemical production and other nonfertilizer product manufacturing. Efficient plants recover about 99.9 percent of the elemental phosphorus burned as phosphoric acid.

8.9.3 Emissions And Controls[3-6]

Emission factors for controlled and uncontrolled wet phosphoric acid production are shown in Tables 8.9-1 and 8.9-2, respectively. Emission factors for controlled thermal phosphoric acid production are shown in Table 8.9-3.

8.9.3.1 Wet Process -

Major emissions from wet process acid production includes gaseous fluorides, mostly silicon tetrafluoride (SiF_4) and hydrogen fluoride (HF). Phosphate rock contains 3.5 to 4.0 percent fluorine. In general, part of the fluorine from the rock is precipitated out with the gypsum, another part is leached out with the phosphoric acid product, and the remaining portion is vaporized in the reactor or evaporator. The relative quantities of fluorides in the filter acid and gypsum depend on the type of rock and the operating conditions. Final disposition of the volatilized fluorine depends on the design and operation of the plant.

Scrubbers may be used to control fluorine emissions. Scrubbing systems used in phosphoric acid plants include venturi, wet cyclonic, and semi-cross-flow scrubbers. The leachate portion of the fluorine may be deposited in settling ponds. If the pond water becomes saturated with fluorides, fluorine gas may be emitted to the atmosphere.

The reactor in which phosphate rock is reacted with sulfuric acid is the main source of emissions. Fluoride emissions accompany the air used to cool the reactor slurry. Vacuum flash cooling has replaced the air cooling method to a large extent, since emissions are minimized in the closed system.

Acid concentration by evaporation is another source of fluoride emissions. Approximately 20 to 40 percent of the fluorine originally present in the rock vaporizes in this operation.

Total particulate emissions from process equipment were measured for 1 digester and for 1 filter. As much as 5.5 kilograms of particulate per megagram (kg/Mg) (11 pounds per ton [lb/ton]) of P_2O_5 were produced by the digester, and approximately 0.1 kg/Mg (0.2 lb/ton) of P_2O_5 were released by the filter. Of this particulate, 3 to 6 percent were fluorides.

Particulate emissions occurring from phosphate rock handling are discussed in Section 11.21, Phosphate Rock Processing.

8.9.3.2 Thermal Process -

The major source of emissions from the thermal process is H_3PO_4 mist contained in the gas stream from the hydrator. The particle size of the acid mist ranges from 1.4 to 2.6 micrometers. It is not uncommon for as much as half of the total P_2O_5 to be present as liquid phosphoric acid particles suspended in the gas stream. Efficient plants are economically motivated to control this potential loss

Table 8.9-1 (Metric And English Units). CONTROLLED EMISSION FACTORS FOR WET PHOSPHORIC ACID PRODUCTION[a]

EMISSION FACTOR RATING: B (except as noted)

Source	Fluorine	
	kg/Mg P_2O_5 Produced	lb/ton P_2O_5 Produced
Reactor[b] (SCC 3-01-016-01)	1.9×10^{-3}	3.8×10^{-3}
Evaporator[c] (SCC 3-01-016-99)	0.022×10^{-3}	0.044×10^{-3}
Belt filter[c] (SCC 3-01-016-99)	0.32×10^{-3}	0.64×10^{-3}
Belt filter vacuum pump[c] (SCC 3-01-016-99)	0.073×10^{-3}	0.15×10^{-3}
Gypsum settling & cooling ponds[d,e] (SCC 3-01-016-02)	Site-specific	Site-specific

[a] SCC = Source Classification Code.
[b] References 8-13. EMISSION FACTOR RATING: A
[c] Reference 13.
[d] Reference 18. Site-specific. Acres of cooling pond required: ranges from 0.04 hectare per daily Mg (0.10 acre per daily ton) P_2O_5 produced in the summer in the southeastern U. S. to 0 in the colder locations in the winter months when the cooling ponds are frozen.
[e] Reference 19 states "Based on our findings concerning the emissions of fluoride from gypsum ponds, it was concluded than no investigator had as yet established experimentally the fluoride emission from gypsum ponds".

Table 8.9-2 (Metric And English Units). UNCONTROLLED EMISSION FACTORS FOR WET PHOSPHORIC ACID PRODUCTION[a]

EMISSION FACTOR RATING: C (except as noted)

Source	Nominal Percent Control Efficiency	Fluoride	
		kg/Mg P_2O_5 Produced	lb/ton P_2O_5 Produced
Reactor[b] (SCC 3-01-016-01)	99	0.19	0.38
Evaporator[c] (SCC 3-01-016-99)	99	0.00217	0.0044
Belt filter[c] (SCC 3-01-016-99)	99	0.032	0.064
Belt filter vacuum pump[c] (SCC 3-01-016-99)	99	0.0073	0.015
Gypsum settling & cooling ponds[d,e] (SCC 3-01-016-02)	ND	Site-specific	Site-specific

[a] SCC = Source Classification Code. ND = No Data.
[b] References 8-13. EMISSION FACTOR RATING: B.
c Reference 13.
[d] Reference 18. Site specific. Acres of cooling pond required: ranges from 0.04 hectare per daily Mg (0.10 acre per daily ton) P_2O_5 produced in the summer in the southeastern U. S. to 0 in the colder locations in the winter months when the cooling ponds are frozen.
[e] Reference 19 states "Based on our findings concerning the emissions of fluoride from gypsum ponds, it was concluded than no investigator had as yet established experimentally the fluoride emission from gypsum ponds".

Table 8.9-3 (Metric And English Units). CONTROLLED EMISSION FACTORS FOR THERMAL PHOSPHORIC ACID PRODUCTION[a]

EMISSION FACTOR RATING: E

Source	Nominal Percent Control Efficiency	Particulate[b]	
		kg/Mg P_2O_5 Produced	lb/ton P_2O_5 Produced
Packed tower (SCC 3-01-017-03)	95.5	1.07	2.14
Venturi scrubber (SCC 3-01-017-04)	97.5	1.27	2.53
Glass fiber mist eliminator (SCC 3-01-017-05)	96 - 99.9	0.35	0.69
Wire mesh mist eliminator (SCC 3-01-017-06)	95	2.73	5.46
High pressure drop mist (SCC 3-01-017-07)	99.9	0.06	0.11
Electrostatic precipitator (SCC 3-01-017-08)	98 - 99	0.83	1.66

[a] SCC = Source Classification Code.
[b] Reference 6.

with various control equipment. Control equipment commonly used in thermal process phosphoric acid plants includes venturi scrubbers, cyclonic separators with wire mesh mist eliminators, fiber mist eliminators, high energy wire mesh contractors, and electrostatic precipitators.

References For Section 8.9

1. "Phosphoric Acid", *Chemical And Engineering News*, March 2, 1987.

2. *Sulfuric/Phosphoric Acid Plant Operation*, American Institute Of Chemical Engineers, New York, 1982.

3. P. Becker, *Phosphates And Phosphoric Acid, Raw Materials, Technology, And Economics Of The Wet Process*, 2nd Edition, Marcel Dekker, Inc., New York, 1989.

4. *Atmospheric Emissions From Wet Process Phosphoric Acid Manufacture*, AP-57, U. S. Environmental Protection Agency, Research Triangle Park, NC, April 1970.

5. *Atmospheric Emissions From Thermal Process Phosphoric Acid Manufacture*, AP-48, U. S. Environmental Protection Agency, Research Triangle Park, NC, October 1968.

6. *Control Techniques For Fluoride Emissions*, Unpublished, U. S. Public Health Service, Research Triangle Park, NC, September 1970.

7. *Final Guideline Document: Control Of Fluoride Emissions From Existing Phosphate Fertilizer Plants*, EPA-450/2-77-005, U. S. Environmental Protection Agency, Research Triangle Park, NC, March 1977.

8. *Summary Of Emission Measurements—East Phos Acid*, International Minerals And Chemical Corporation, Polk County, FL, August 1990.

9. *Summary Of Emission Measurements—East Phos Acid*, International Minerals And Chemical Corporation, Polk County, FL, February 1991.

10. *Summary Of Emission Measurements—East Phos Acid*, International Minerals And Chemical Corporation, Polk County, FL, August 1991.

11. *Source Test Report*, Seminole Fertilizer Corporation, Bartow, FL, September 1990.

12. *Source Test Report*, Seminole Fertilizer Corporation, Bartow, FL, May 1991.

13. *Stationary Source Sampling Report, Texasgulf Chemicals Company, Aurora, NC*, Entropy Environmentalists, Inc., Research Triangle Park, NC, December 1987.

14. *Stationary Source Sampling Report, Texasgulf Chemicals Company, Aurora, NC*, Entropy Environmentalists, Inc., Research Triangle Park, NC, March 1987.

15. *Sulfur Dioxide Emissions Test, Phosphoric Acid Plant, Texasgulf Chemicals Company, Aurora, NC*, Entropy Environmentalists, Inc., Research Triangle Park, NC, August 1988.

16. *Stationary Source Sampling Report, Texasgulf Chemicals Company, Aurora, NC*, Entropy Environmentalists, Inc., Research Triangle Park, NC, August 1987.

17. *Source Test Report, FMC Corporation, Carteret, NJ*, Princeton Testing Laboratory, Princeton, NJ, March 1991.

18. A. J. Buonicore and W. T. Davis, eds., *Air Pollution Engineering Manual*, Van Nostrand Reinhold, New York, 1992.

19. *Evaluation Of Emissions And Control Techniques For Reducing Fluoride Emission From Gypsum Ponds In The Phosphoric Acid Industry*, EPA-600/2-78-124, U. S. Environmental Protection Agency, Cinncinnati, OH, 1978.

8.10 Sulfuric Acid

8.10.1 General[1-2]

Sulfuric acid (H_2SO_4) is a basic raw material used in a wide range of industrial processes and manufacturing operations. Almost 70 percent of sulfuric acid manufactured is used in the production of phosphate fertilizers. Other uses include copper leaching, inorganic pigment production, petroleum refining, paper production, and industrial organic chemical production.

Sulfuric acid may be manufactured commercially by either the lead chamber process or the contact process. Because of economics, all of the sulfuric acid produced in the U. S. is now produced by the contact process. U. S. facilities produce approximately 42 million megagrams (Mg) (46.2 million tons) of H_2SO_4 annually. Growth in demand was about 1 percent per year from 1981 to 1991 and is projected to continue to increase at about 0.5 percent per year.

8.10.2 Process Description[3-5]

Since the contact process is the only process currently used, it will be the only one discussed in this section. Contact plants are classified according to the raw materials charged to them: elemental sulfur burning, spent sulfuric acid and hydrogen sulfide burning, and metal sulfide ores and smelter gas burning. The contributions from these plants to the total acid production are 81, 8, and 11 percent, respectively.

The contact process incorporates 3 basic operations, each of which corresponds to a distinct chemical reaction. First, the sulfur in the feedstock is oxidized (burned) to sulfur dioxide (SO_2):

$$S + O_2 \rightarrow SO_2 \qquad (1)$$

The resulting sulfur dioxide is fed to a process unit called a converter, where it is catalytically oxidized to sulfur trioxide (SO_3):

$$2SO_2 + O_2 \rightarrow 2SO_3 \qquad (2)$$

Finally, the sulfur trioxide is absorbed in a strong 98 percent sulfuric acid solution:

$$SO_3 + H_2O \rightarrow H_2SO_4 \qquad (3)$$

8.10.2.1 Elemental Sulfur Burning Plants -

Figure 8.10-1 is a schematic diagram of a dual absorption contact process sulfuric acid plant that burns elemental sulfur. In the Frasch process, elemental sulfur is melted, filtered to remove ash, and sprayed under pressure into a combustion chamber. The sulfur is burned in clean air that has been dried by scrubbing with 93 to 99 percent sulfuric acid. The gases from the combustion chamber cool by passing through a waste heat boiler and then enter the catalyst (vanadium pentoxide) converter. Usually, 95 to 98 percent of the sulfur dioxide from the combustion chamber is converted to sulfur trioxide, with an accompanying large evolution of heat. After being cooled, again by generating steam, the converter exit gas enters an absorption tower. The absorption tower is a packed column where acid is sprayed in the top and where the sulfur trioxide enters from the bottom. The

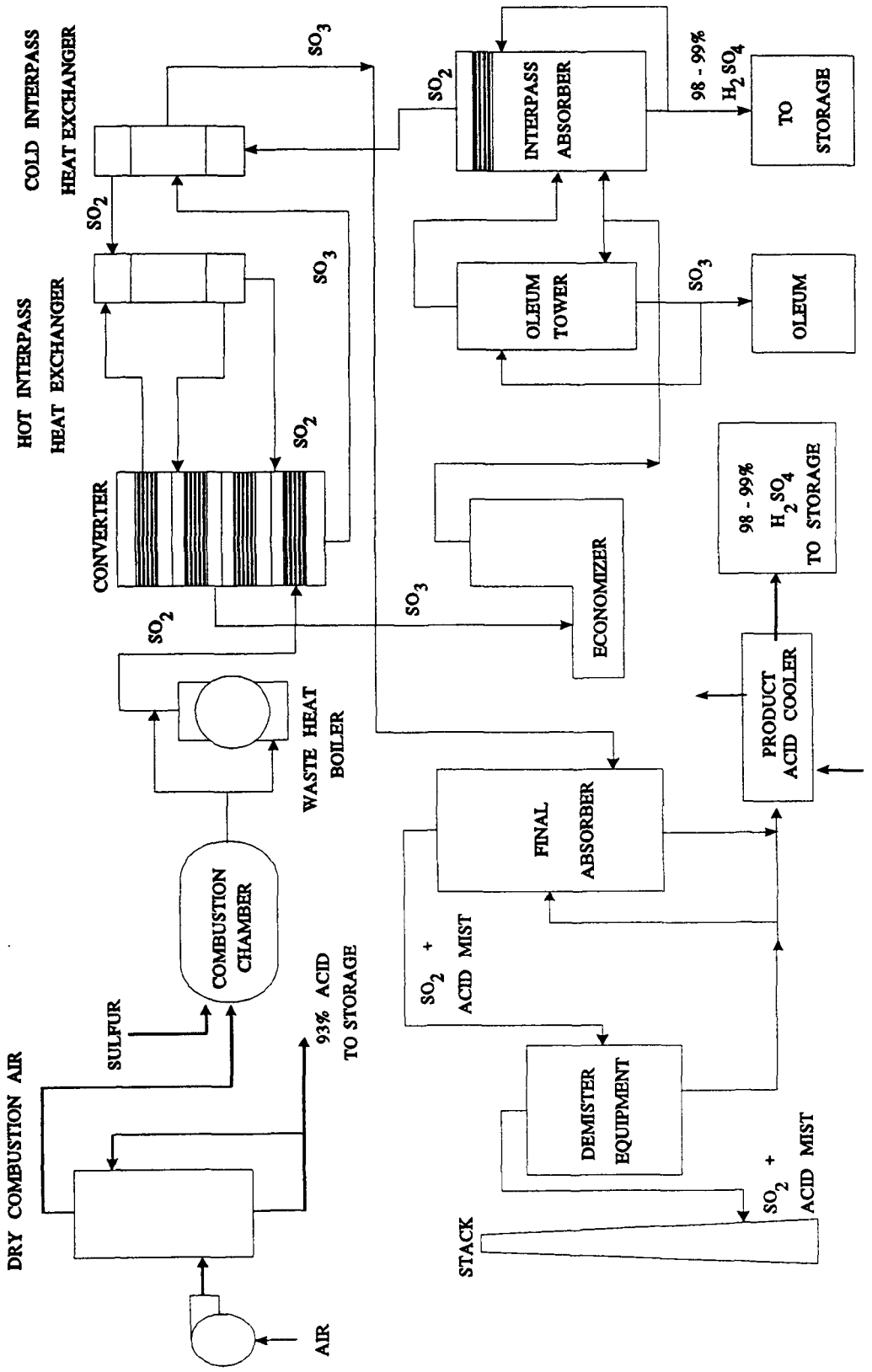

Figure 8.10-1. Typical contact process sulfuric acid plant burning elemental sulfur.

sulfur trioxide is absorbed in the 98 to 99 percent sulfuric acid. The sulfur trioxide combines with the water in the acid and forms more sulfuric acid.

If oleum (a solution of uncombined SO_3 dissolved in H_2SO_4) is produced, SO_3 from the converter is first passed to an oleum tower that is fed with 98 percent acid from the absorption system. The gases from the oleum tower are then pumped to the absorption column where the residual sulfur trioxide is removed.

In the dual absorption process shown in Figure 8.10-1, the SO_3 gas formed in the primary converter stages is sent to an interpass absorber where most of the SO_3 is removed to form H_2SO_4. The remaining unconverted sulfur dioxide is forwarded to the final stages in the converter to remove much of the remaining SO_2 by oxidation to SO_3, whence it is sent to the final absorber for removal of the remaining sulfur trioxide. The single absorption process uses only one absorber, as the name implies.

8.10.2.2 Spent Acid And Hydrogen Sulfide Burning Plants -

A schematic diagram of a contact process sulfuric acid plant that burns spent acid is shown in Figure 8.10-2. Two types of plants are used to process this type of sulfuric acid. In one, the sulfur dioxide and other products from the combustion of spent acid and/or hydrogen sulfide with undried atmospheric air are passed through gas cleaning and mist removal equipment. The gas stream next passes through a drying tower. A blower draws the gas from the drying tower and discharges the sulfur dioxide gas to the sulfur trioxide converter, then to the oleum tower and/or absorber.

In a "wet gas plant", the wet gases from the combustion chamber are charged directly to the converter, with no intermediate treatment. The gas from the converter flows to the absorber, through which 93 to 98 percent sulfuric acid is circulated.

8.10.2.3 Sulfide Ores And Smelter Gas Plants -

The configuration of this type of plant is essentially the same as that of a spent acid plant (Figure 8.10-2), with the primary exception that a roaster is used in place of the combustion furnace.

The feed used in these plants is smelter gas, available from such equipment as copper converters, reverberatory furnaces, roasters, and flash smelters. The sulfur dioxide in the gas is contaminated with dust, acid mist, and gaseous impurities. To remove the impurities, the gases must be cooled and passed through purification equipment consisting of cyclone dust collectors, electrostatic dust and mist precipitators, and scrubbing and gas cooling towers. After the gases are cleaned and the excess water vapor is removed, they are scrubbed with 98 percent acid in a drying tower. Beginning with the drying tower stage, these plants are nearly identical to the elemental sulfur plants shown in Figure 8.10-1.

8.10.3 Emissions[4,6-7]

8.10.3.1 Sulfur Dioxide -

Nearly all sulfur dioxide emissions from sulfuric acid plants are found in the exit stack gases. Extensive testing has shown that the mass of these SO_2 emissions is an inverse function of the sulfur conversion efficiency (SO_2 oxidized to SO_3). This conversion is always incomplete, and is affected by the number of stages in the catalytic converter, the amount of catalyst used, temperature and pressure, and the concentrations of the reactants (sulfur dioxide and oxygen). For example, if the inlet SO_2 concentration to the converter were 9 percent by volume (a representative value), and the conversion temperature was 430°C (806°F), the conversion efficiency would be 98 percent. At this conversion, Table 8.10-1 shows that the uncontrolled emission factor for SO_2 would be 13 kilograms

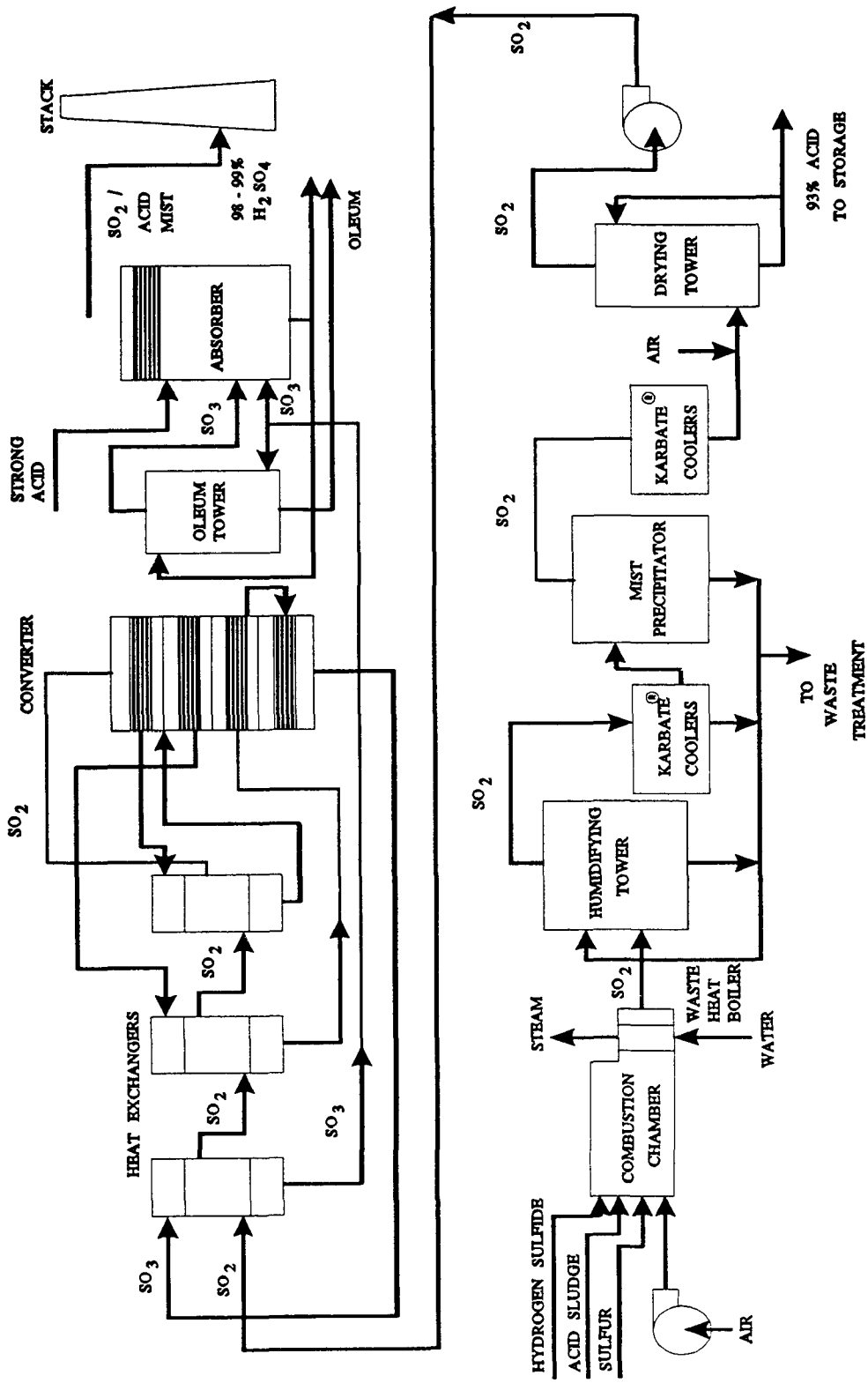

Figure 8.10-2. Basic flow diagram of contact process sulfuric acid plant burning spent acid.

per megagram (kg/Mg) (26 pounds per ton [lb/ton]) of 100 percent sulfuric acid produced. (For purposes of comparison, note that the Agency's new source performance standard [NSPS] for new and modified plants is 2 kg/Mg (4 lb/ton) of 100 percent acid produced, maximum 2 hour average.) As Table 8.10-1 and Figure 8.10-3 indicate, achieving this standard requires a conversion efficiency of 99.7 percent in an uncontrolled plant, or the equivalent SO_2 collection mechanism in a controlled facility.

Dual absorption, as discussed above, has generally been accepted as the best available control technology for meeting NSPS emission limits. There are no byproducts or waste scrubbing materials created, only additional sulfuric acid. Conversion efficiencies of 99.7 percent and higher are achievable, whereas most single absorption plants have SO_2 conversion efficiencies ranging only from 95 to 98 percent. Furthermore, dual absorption permits higher converter inlet sulfur dioxide concentrations than are used in single absorption plants, because the final conversion stages effectively remove any residual sulfur dioxide from the interpass absorber.

In addition to exit gases, small quantities of sulfur oxides are emitted from storage tank vents and tank car and tank truck vents during loading operations, from sulfuric acid concentrators, and through leaks in process equipment. Few data are available on the quantity of emissions from these sources.

Table 8.10-1 (Metric And English Units). SULFUR DIOXIDE EMISSION FACTORS FOR SULFURIC ACID PLANTS[a]

EMISSION FACTOR RATING: E

SO_2 To SO_3 Conversion Efficiency (%)		SO_2 Emissions[b]	
		kg/Mg Of Product	lb/ton Of Product
93	(SCC 3-01-023-18)	48.0	96
94	(SCC 3-01-023-16)	41.0	82
95	(SCC 3-01-023-14)	35.0	70
96	(SCC 3-01-023-12)	27.5	55
97	(SCC 3-01-023-10)	20.0	40
98	(SCC 3-01-023-08)	13.0	26
99	(SCC 3-01-023-06)	7.0	14
99.5	(SCC 3-01-023-04)	3.5	7
99.7	NA	2.0	4
100	(SCC 3-01-023-01)	0.0	0.0

[a] Reference 3. SCC = Source Classification Code. NA = not applicable.
[b] This linear interpolation formula can be used for calculating emission factors for conversion efficiencies between 93 and 100%: emission factor (kg/Mg of Product) = 682 - 6.82 (% conversion efficiency) (emission factor [lb/ton of Product] = 1365 - 13.65 [% conversion efficiency]).

8.10.3.2 Acid Mist -

Nearly all the acid mist emitted from sulfuric acid manufacturing can be traced to the absorber exit gases. Acid mist is created when sulfur trioxide combines with water vapor at a

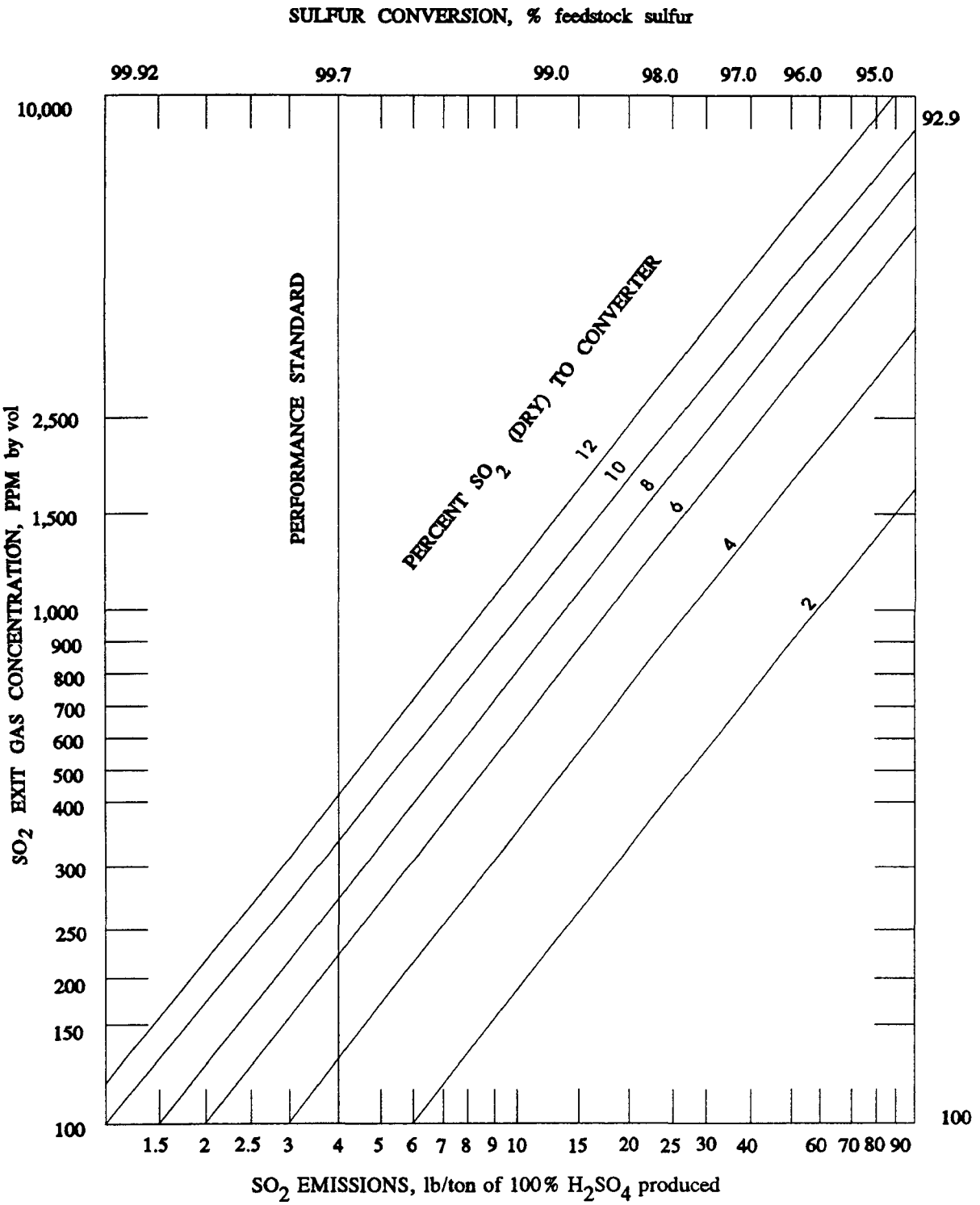

Figure 8.10-3. Sulfuric acid plant feedstock conversion versus volumetric and mass SO_2 emissions at various inlet SO_2 concentrations by volume.

temperature below the dew point of sulfur trioxide. Once formed within the process system, this mist is so stable that only a small quantity can be removed in the absorber.

In general, the quantity and particle size distribution of acid mist are dependent on the type of sulfur feedstock used, the strength of acid produced, and the conditions in the absorber. Because it contains virtually no water vapor, bright elemental sulfur produces little acid mist when burned. However, the hydrocarbon impurities in other feedstocks (i. e., dark sulfur, spent acid, and hydrogen sulfide) oxidize to water vapor during combustion. The water vapor, in turn, combines with sulfur trioxide as the gas cools in the system.

The strength of acid produced, whether oleum or 99 percent sulfuric acid, also affects mist emissions. Oleum plants produce greater quantities of finer, more stable mist. For example, an unpublished report found that uncontrolled mist emissions from oleum plants burning spent acid range from 0.5 to 5.0 kg/Mg (1.0 to 10.0 lb/ton), while those from 98 percent acid plants burning elemental sulfur range from 0.2 to 2.0 kg/Mg (0.4 to 4.0 lb/ton).[4] Furthermore, 85 to 95 weight percent of the mist particles from oleum plants are less than 2 micrometers (μm) in diameter, compared with only 30 weight percent that are less than 2 μm in diameter from 98 percent acid plants.

The operating temperature of the absorption column directly affects sulfur trioxide absorption and, accordingly, the quality of acid mist formed after exit gases leave the stack. The optimum absorber operating temperature depends on the strength of the acid produced, throughput rates, inlet sulfur trioxide concentrations, and other variables peculiar to each individual plant. Finally, it should be emphasized that the percentage conversion of sulfur trioxide has no direct effect on acid mist emissions.

Table 8.10-2 presents uncontrolled acid mist emission factors for various sulfuric acid plants. Table 8.10-3 shows emission factors for plants that use fiber mist eliminator control devices. The 3 most commonly used fiber mist eliminators are the vertical tube, vertical panel, and horizontal dual pad types. They differ from one another in the arrangement of the fiber elements, which are composed of either chemically resistant glass or fluorocarbon, and in the means employed to collect the trapped liquid. Data are available only with percent oleum ranges for 2 raw material categories.

8.10.3.3 Carbon Dioxide -

The 9 source tests mentioned above were also used to determine the amount of carbon dioxide (CO_2), a global warming gas, emitted by sulfuric acid production facilities. Based on the tests, a CO_2 emission factor of 4.05 kg emitted per Mg produced (8.10 lb/ton) was developed, with an emission factor rating of C.

Table 8.10-2 (Metric And English Units). UNCONTROLLED ACID MIST EMISSION FACTORS FOR SULFURIC ACID PLANTS[a]

EMISSION FACTOR RATING: E

Raw Material	Oleum Produced, % Total Output	Emissions[b]	
		kg/Mg Of Product	lb/ton Of Product
Recovered sulfur (SCC 3-01-023-22)	0 - 43	0.174 - 0.4	0.348 - 0.8
Bright virgin sulfur (SCC 3-01-023-22)	0	0.85	1.7
Dark virgin sulfur (SCC 3-01-023-22)	0 - 100	0.16 - 3.14	0.32 - 6.28
Spent acid (SCC 3-01-023-22)	0 - 77	1.1 - 1.2	2.2 - 2.4

[a] Reference 3. SCC = Source Classification Code.
[b] Emissions are proportional to the percentage of oleum in the total product. Use low end of ranges for low oleum percentage and high end of ranges for high oleum percentage.

Table 8.10-3 (Metric And English Units). CONTROLLED ACID MIST EMISSION FACTORS FOR SULFURIC ACID PLANTS

EMISSION FACTOR RATING: E (except as noted)

Raw Material	Oleum Produced, % Total Output	Emissions	
		kg/Mg Of Product	lb/ton Of Product
Elemental sulfur[a] (SCC 3-01-023-22)	—	0.064	0.128
Dark virgin sulfur[b] (SCC 3-01-023-22)	0 - 13	0.26 - 1.8	0.52 - 3.6
Spent acid (SCC 3-01-023-22)	0 - 56	0.014 - 0.20	0.28 - 0.40

[a] References 8-13,15-17. EMISSION FACTOR RATING: C. SCC = Source Classification Code.
[b] Reference 3.

References For Section 8.10

1. *Chemical Marketing Reporter*, *240*:8, Schnell Publishing Company, Inc., New York, September 16, 1991.

2. *Final Guideline Document: Control Of Sulfuric Acid Mist Emissions From Existing Sulfuric Acid Production Units*, EPA-450/2-77-019, U. S. Environmental Protection Agency, Research Triangle Park, NC, September 1977.

3. *Atmospheric Emissions From Sulfuric Acid Manufacturing Processes*, 999-AP-13, U. S. Department Of Health, Education And Welfare, Washington, DC, 1966.

4. Unpublished Report On Control Of Air Pollution From Sulfuric Acid Plants, U. S. Environmental Protection Agency, Research Triangle Park, NC, August 1971.

5. *Review Of New Source Performance Standards For Sulfuric Acid Plants*, EPA-450/3-85-012, U. S. Environmental Protection Agency, Research Triangle Park, NC, March 1985.

6. *Standards Of Performance For New Stationary Sources*, 36 FR 24875, December 23, 1971.

7. "Sulfuric Acid", *Air Pollution Engineering Manual*, Air And Water Management Association, 1992.

8. *Source Emissions Compliance Test Report, Sulfuric Acid Stack*, Roy F. Weston, Inc., West Chester, PA, October 1989.

9. *Source Emissions Compliance Test Report, Sulfuric Acid Stack*, Roy F. Weston, Inc., West Chester, PA, February 1988.

10. *Source Emissions Compliance Test Report, Sulfuric Acid Stack*, Roy F. Weston, Inc., West Chester, PA, December 1989.

11. *Source Emissions Compliance Test Report, Sulfuric Acid Stack*, Roy F. Weston, Inc., West Chester, PA, December 1991.

12. *Stationary Source Sampling Report, Sulfuric Acid Plant*, Entropy Environmentalists, Inc., Research Triangle Park, NC, January 1983.

13. *Source Emissions Test: Sulfuric Acid Plant*, Ramcon Environmental Corporation, Memphis, TN, October 1989.

14. *Mississippi Chemical Corporation, Air Pollution Emission Tests, Sulfuric Acid Stack*, Environmental Science and Engineering, Inc., Gainesville, FL, September 1973.

15. *Kennecott Copper Corporation, Air Pollution Emission Tests, Sulfuric Acid Stack—Plant 6*, Engineering Science, Inc., Washington, DC, August 1972.

16. *Kennecott Copper Corporation, Air Pollution Emission Tests, Sulfuric Acid Stack—Plant 7*, Engineering Science, Inc., Washington, DC, August 1972.

17. *American Smelting Corporation, Air Pollution Emission Tests, Sulfuric Acid Stack*, Engineering Science, Inc., Washington, DC, June 1972.

8.11 Chlor-Alkali

8.11.1 General[1-2]

The chlor-alkali electrolysis process is used in the manufacture of chlorine, hydrogen, and sodium hydroxide (caustic) solution. Of these 3, the primary product is chlorine.

Chlorine is 1 of the more abundant chemicals produced by industry and has a wide variety of industrial uses. Chlorine was first used to produce bleaching agents for the textile and paper industries and for general cleaning and disinfecting. Since 1950, chlorine has become increasingly important as a raw material for synthetic organic chemistry. Chlorine is an essential component of construction materials, solvents, and insecticides. Annual production from U. S. facilities was 9.9 million megagrams (Mg) (10.9 million tons) in 1990 after peaking at 10.4 million Mg (11.4 million tons) in 1989.

8.11.2 Process Description[1-3]

There are 3 types of electrolytic processes used in the production of chlorine: (1) the diaphragm cell process, (2) the mercury cell process, and (3) the membrane cell process. In each process, a salt solution is electrolyzed by the action of direct electric current that converts chloride ions to elemental chlorine. The overall process reaction is:

$$2\,NaCl + 2\,H_2O \rightarrow Cl_2 + H_2 + 2\,NaOH$$

In all 3 methods, the chlorine (Cl_2) is produced at the positive electrode (anode) and the caustic soda (NaOH) and hydrogen (H_2) are produced, directly or indirectly, at the negative electrode (cathode). The 3 processes differ in the method by which the anode products are kept separate from the cathode products.

Of the chlorine produced in the U. S. in 1989, 94 percent was produced either by the diaphragm cell or mercury cell process. Therefore, these will be the only 2 processes discussed in this section.

8.11.2.1 Diaphragm Cell -

Figure 8.11-1 shows a simplified block diagram of the diaphragm cell process. Water (H_2O) and sodium chloride (NaCl) are combined to create the starting brine solution. The brine undergoes precipitation and filtration to remove impurities. Heat is applied and more salt is added. Then the nearly saturated, purified brine is heated again before direct electric current is applied. The anode is separated from the cathode by a permeable asbestos-based diaphragm to prevent the caustic soda from reacting with the chlorine. The chlorine produced at the anode is removed, and the saturated brine flows through the diaphragm to the cathode chamber. The chlorine is then purified by liquefaction and evaporation to yield a pure liquified product.

The caustic brine produced at the cathode is separated from salt and concentrated in an elaborate evaporative process to produce commercial caustic soda. The salt is recycled to saturate the

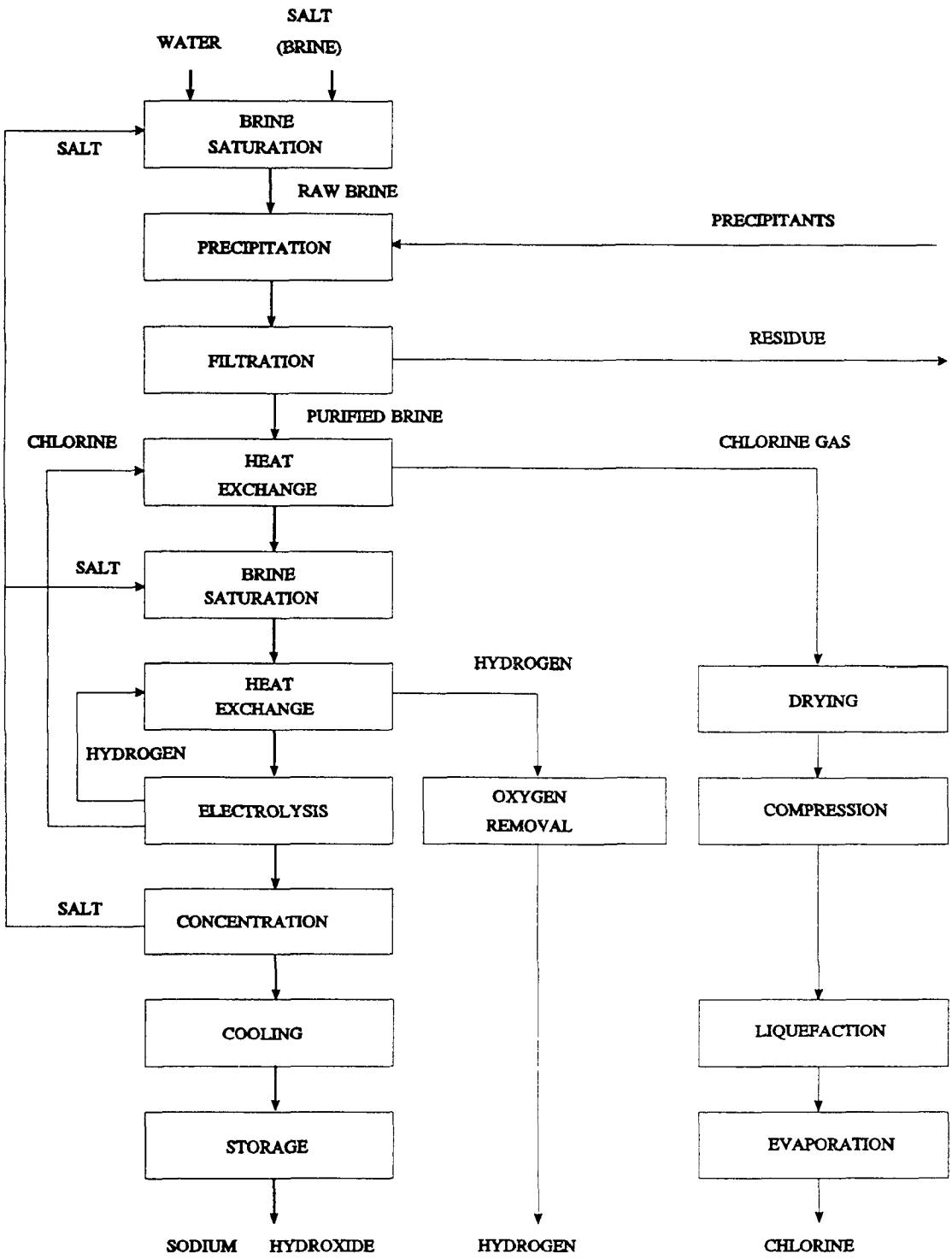

Figure 8.11-1. Simplified diagram of the diaphragm cell process.

dilute brine. The hydrogen removed in the cathode chamber is cooled and purified by removal of oxygen, then used in other plant processes or sold.

8.11.2.2 Mercury Cell -

Figure 8.11-2 shows a simplified block diagram for the mercury cell process. The recycled brine from the electrolysis process (anolyte) is dechlorinated and purified by a precipitation-filtration process. The liquid mercury cathode and the brine enter the cell flowing concurrently. The electrolysis process creates chlorine at the anode and elemental sodium at the cathode. The chlorine is removed from the anode, cooled, dried, and compressed. The sodium combines with mercury to form a sodium amalgam. The amalgam is further reacted with water in a separate reactor called the decomposer to produce hydrogen gas and caustic soda solution. The caustic and hydrogen are then separately cooled and the mercury is removed before proceeding to storage, sales, or other processes.

8.11.3 Emissions And Controls[4]

Tables 8.11-1 and 8.11-2 are is a summaries of chlorine emission factors for chlor-alkali plants. Factors are expressed in units of kilograms per megagram (kg/Mg) and pounds per ton (lb/ton). Emissions from diaphragm and mercury cell plants include chlorine gas, carbon dioxide (CO_2), carbon monoxide (CO), and hydrogen. Gaseous chlorine is present in the blow gas from liquefaction, from vents in tank cars and tank containers during loading and unloading, and from storage tanks and process transfer tanks. Carbon dioxide emissions result from the decomposition of carbonates in the brine feed when contacted with acid. Carbon monoxide and hydrogen are created by side reactions within the production cell. Other emissions include mercury vapor from mercury cathode cells and chlorine from compressor seals, header seals, and the air blowing of depleted brine in mercury-cell plants. Emissions from these locations are, for the most part, controlled through the use of the gas in other parts of the plant, neutralization in alkaline scrubbers, or recovery of the chlorine from effluent gas streams.

Table 8.11-3 presents mercury emission factors based on 2 source tests used to substantiate the mercury national emission standard for hazardous air pollutants. Due to insufficient data, emission factors for CO, CO_2, and hydrogen are not presented here.

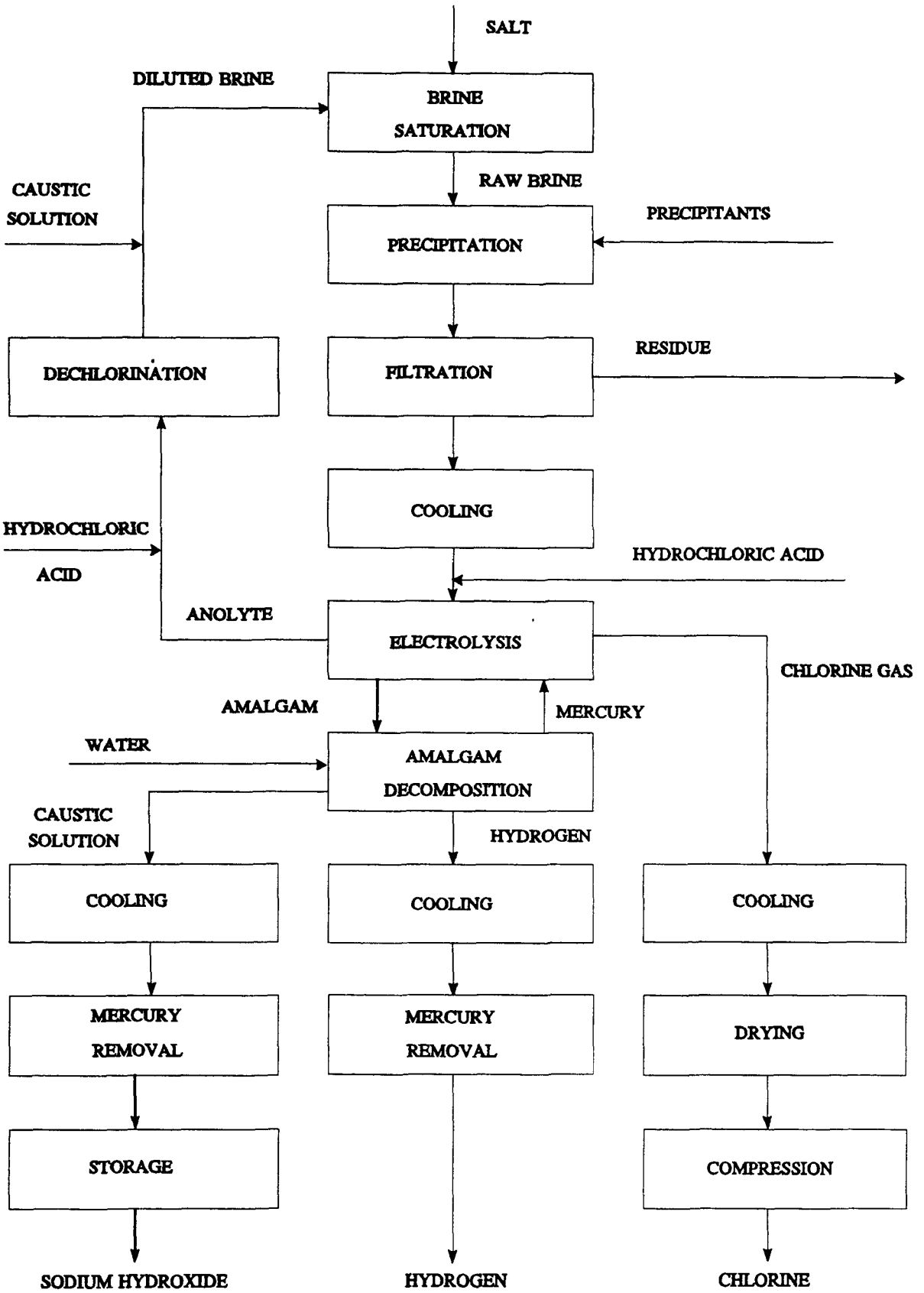

Figure 8.11-2. Simplified diagram of the mercury cell process.

Table 8.11-1 (Metric Units). EMISSION FACTORS FOR CHLORINE FROM CHLOR-ALKALI PLANTS[a]

EMISSION FACTOR RATING: E

Source	Chlorine Gas (kg/Mg Of Chlorine Produced)
Liquefaction blow gases	
Diaphragm cell (SCC 3-01-008-01)	10 - 50
Mercury cell (SCC 3-01-008-02)	20 - 80
Water absorber[b] (SCC 3-01-008-99)	0.830
Caustic scrubber[b] (SCC 3-01-008-99)	0.006
Chlorine loading	
Returned tank car vents (SCC 3-01-008-03)	4.1
Shipping container vents (SCC 3-01-008-04)	8.7
Mercury cell brine air blowing (SCC 3-01-008-05)	2.7

[a] Reference 4. SCC = Source Classification Code.
[b] Control devices.

Table 8.11-2 (English Units). EMISSION FACTORS FOR CHLORINE FROM CHLOR-ALKALI PLANTS[a]

EMISSION FACTOR RATING: E

Source	Chlorine Gas (lb/ton Of Chlorine Produced)
Liquefaction blow gases	
Diaphragm cell (SCC 3-01-008-01)	20 - 100
Mercury cell (SCC 3-01-008-02)	40 - 160
Water absorber[b] (SCC 3-01-008-99)	1.66
Caustic scrubber[b] (SCC 3-01-008-99)	0.012
Chlorine loading	
Returned tank car vents (SCC 3-01-008-03)	8.2
Shipping container vents (SCC 3-01-008-04)	17.3
Mercury cell brine air blowing (SCC 3-01-008-05)	5.4

[a] Reference 4. SCC = Source Classification Code.
[b] Control devices.

Table 8.11-3 (Metric And English Units). EMISSION FACTORS FOR MERCURY FROM MERCURY CELL CHLOR-ALKALI PLANTS[a]

EMISSION FACTOR RATING: E

Type Of Source	Mercury Gas	
	kg/Mg Of Chlorine Produced	lb/ton Of Chlorine Produced
Hydrogen vent (SCC 3-01-008-02)		
Uncontrolled	0.0017	0.0033
Controlled	0.0006	0.0012
End box (SCC 3-01-008-02)	0.005	0.010

[a] SCC = Source Classification Code.

References For Section 8.11

1. *Ullmann's Encyclopedia Of Industrial Chemistry*, VCH Publishers, New York, 1989.

2. The Chlorine Institute, Inc., Washington, DC, January 1991.

3. *1991 Directory Of Chemical Producers*, Menlo Park, California: Chemical Information Services, Stanford Research Institute, Stanford, CA, 1991.

4. *Atmospheric Emissions From Chlor-Alkali Manufacture, AP-80*, U. S. Environmental Protection Agency, Research Triangle Park, NC, January 1971.

5. *B. F. Goodrich Chemical Company Chlor-Alkali Plant Source Tests, Calvert City, Kentucky*, EPA Contract No. CPA 70-132, Roy F. Weston, Inc., May 1972.

6. *Diamond Shamrock Corporation Chlor-Alkali Plant Source Tests, Delaware City, Delaware*, EPA Contract No. CPA 70-132, Roy F. Weston, Inc., June 1972.

8.12 Sodium Carbonate

8.12.1 General[1-3]

Sodium carbonate (Na_2CO_3), commonly referred to as soda ash, is one of the largest-volume mineral products in the U. S., with 1991 production of over 9 million megagrams (Mg) (10.2 million tons). Over 85 percent of this soda ash originates in Wyoming, with the remainder coming from Searles Valley, California. Soda ash is used mostly in the production of glass, chemicals, soaps, and detergents, and by consumers. Demand depends to great extent upon the price of, and environmental issues surrounding, caustic soda, which is interchangeable with soda ash in many uses and is widely coproduced with chlorine (see Section 8.11, "Chlor-Alkali").

8.12.2 Process Description[4-7]

Soda ash may be manufactured synthetically or from naturally occurring raw materials such as ore. Only 1 U. S. facility recovers small quantities of Na_2CO_3 synthetically as a byproduct of cresylic acid production. Other synthetic processes include the Solvay process, which involves saturation of brine with ammonia (NH_3) and carbon dioxide (CO_2) gas, and the Japanese ammonium chloride (NH_4Cl) coproduction process. Both of these synthetic processes generate ammonia emissions. Natural processes include the calcination of sodium bicarbonate ($NaHCO_3$), or nahcolite, a naturally occurring ore found in vast quantities in Colorado.

The 2 processes currently used to produce natural soda ash differ only in the recovery stage in primary treatment of the raw material used. The raw material for Wyoming soda ash is mined trona ore, while California soda ash comes from sodium carbonate-rich brine extracted from Searles Lake.

There are 4 distinct methods used to mine the Wyoming trona ore: (1) solution mining, (2) room-and-pillar, (3) longwall, and (4) shortwall. In solution mining, dilute sodium hydroxide (NaOH), commonly called caustic soda, is injected into the trona to dissolve it. This solution is treated with CO_2 gas in carbonation towers to convert the Na_2CO_3 in solution to $NaHCO_3$, which precipitates and is filtered out. The crystals are again dissolved in water, precipitated with carbon dioxide, and filtered. The product is calcined to produce dense soda ash. Brine extracted from below Searles Lake in California is treated similarly.

Blasting is used in the room-and-pillar, longwall, and shortwall methods. The conventional blasting agent is prilled ammonium nitrate (NH_4NO_3) and fuel oil, or ANFO (see Section 13.3, "Explosives Detonation"). Beneficiation is accomplished with either of 2 methods, called the sesquicarbonate and the monohydrate processes. In the sesquicarbonate process, shown schematically in Figure 8.12-1, trona ore is first dissolved in water (H_2O) and then treated as brine. This liquid is filtered to remove insoluble impurities before the sodium sesquicarbonate ($Na_2CO_3 \cdot NaHCO_3 \cdot 2H_2O$) is precipitated out using vacuum crystallizers. The result is centrifuged to remove remaining water, and can either be sold as a finished product or further calcined to yield soda ash of light to intermediate density. In the monohydrate process, shown schematically in Figure 8.12-2, crushed trona is calcined in a rotary kiln, yielding dense soda ash and carbon dioxide and water as byproducts. The calcined material is combined with water to allow settling out or filtering of impurities such as shale, and is then concentrated by triple-effect evaporators and/or mechanical vapor recompression crystallizers to precipitate sodium carbonate monohydrate ($Na_2CO_3 \cdot H_2O$). Impurities

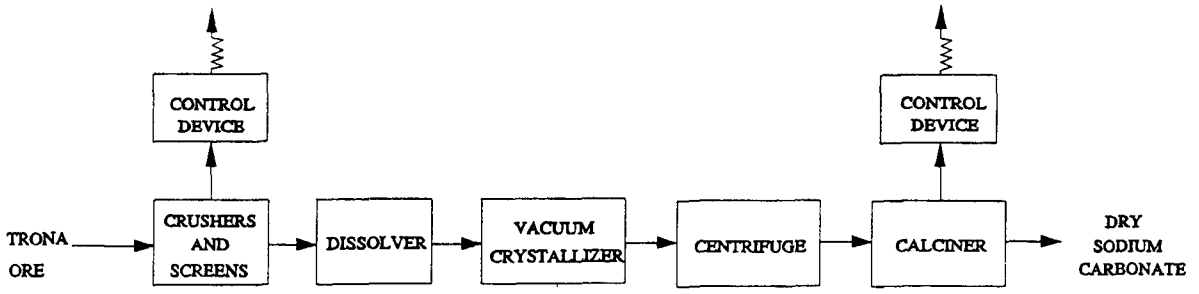

Figure 8.12-1. Flow diagram for sesquicarbonate sodium carbonate processing.

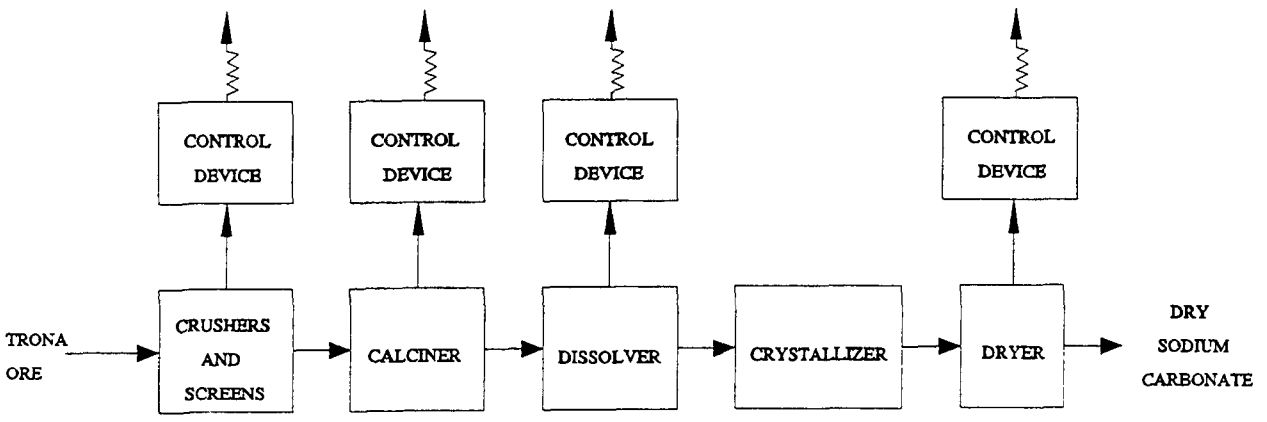

Figure 8.12-2. Flow diagram for monohydrate sodium carbonate processing.

such as sodium chloride (NaCl) and sodium sulfate (Na_2SO_4) remain in solution. The crystals and liquor are centrifuged, and the recovered crystals are calcined again to remove remaining water. The product must then be cooled, screened, and possibly bagged, before shipping.

8.12.3 Emissions And Controls

The principal air emissions from the sodium carbonate production methods now used in the U. S. are particulate emissions from ore calciners; soda ash coolers and dryers; ore crushing, screening, and transporting operations; and product handling and shipping operations. Emissions of products of combustion, such as carbon monoxide, nitrogen oxides, sulfur dioxide, and carbon dioxide, occur from direct-fired process heating units such as ore calcining kilns and soda ash dryers. With the exception of carbon dioxide, which is suspected of contributing to global climate change, insufficient data are available to quantify these emissions with a reasonable level of confidence, but similar processes are addressed in various sections of Chapter 11 of AP-42, "Mineral Products Industry". Controlled emissions of filterable and total particulate matter from individual processes and process components are given in Tables 8.12-1 and 8.12-2. Uncontrolled emissions from these same processes are given in Table 8.12-3. No data quantifying emissions of organic condensable particulate matter from sodium carbonate manufacturing processes are available, but this portion of

Table 8.12-1 (Metric Units). CONTROLLED EMISSION FACTORS FOR PARTICULATE MATTER FROM SODIUM CARBONATE PRODUCTION

Process	Filterable Emissions[a]		Total Emissions[b]	
	kg/Mg Of Product	EMISSION FACTOR RATING	kg/Mg Of Product	EMISSION FACTOR RATING
Ore mining[c] (SCC 3-01-023-99)	0.0016	C	ND	NA
Ore crushing and screening[c] (SCC 3-01-023-99)	0.0010	D	0.0018	C
Ore transfer[c] (SCC 3-01-023-99)	0.00008	E	0.0001	E
Monohydrate process: rotary ore calciner (SCC 3-01-023-04/05)	0.091	A	0.12	B
Sesquicarbonate process: rotary calciner (SCC 3-01-023-99)	0.36	B	0.36	C
Sesquicarbonate process: fluid-bed calciner (SCC 3-01-023-99)	0.021	C	ND	NA
Rotary soda ash dryers (SCC 3-01-023-06)	0.25	C	0.25	D
Fluid-bed soda ash dryers/coolers (SCC 3-01-023-07)	0.015	C	0.019	D
Soda ash screening (SCC 3-01-023-99)	0.0097	E	0.013	E
Soda ash storage/loading and unloading[c] (SCC 3-01-023-99)	0.0021	E	0.0026	E

[a] Filterable particulate matter is that material collected in the probe and filter of a Method 5 or Method 17 sampler. SCC = Source Classification Code. ND = no data. NA = not applicable.
[b] Total particulate matter includes filterable particulate and inorganic condensable particulate.
[c] For ambient temperature processes, all particulate matter emissions can be assumed to be filterable at ambient conditions. However, particulate sampling according to EPA Reference Method 5 involves the heating of the front half of the sampling train to temperatures that may vaporize some portion of this particulate matter, which will then recondense in the back half of the sampling train. For consistency, particulate matter measured as condensable according to Method 5 is reported as such.

the particulate matter can be assumed to be negligible. Emissions of carbon dioxide from selected processes are given in Table 8.12-4. Emissions from combustion sources such as boilers, and from evaporation of hydrocarbon fuels used to fire these combustion sources, are covered in other chapters of AP-42.

Particulate emissions from calciners and dryers are typically controlled by venturi scrubbers, electrostatic precipitators, and/or cyclones. Baghouse filters are not well suited to applications such as these, because of the high moisture content of the effluent gas. Particulate emissions from ore and product handling operations are typically controlled by either venturi scrubbers or baghouse filters. These control devices are an integral part of the manufacturing process, capturing raw materials and

Table 8.12-2 (English Units). CONTROLLED EMISSION FACTORS FOR PARTICULATE MATTER FROM SODIUM CARBONATE PRODUCTION

Process	Filterable Emissions[a]		Total Emissions[b]	
	lb/ton Of Product	EMISSION FACTOR RATING	lb/ton Of Product	EMISSION FACTOR RATING
Ore mining[c] (SCC 3-01-023-99)	0.0033	C	ND	NA
Ore crushing and screening[c] (SCC 3-01-023-99)	0.0021	D	0.0035	C
Ore transfer[c] (SCC 3-01-023-99)	0.0002	E	0.0002	E
Monohydrate process: rotary ore calciner (SCC 3-01-023-04/05)	0.18	A	0.23	B
Sesquicarbonate process: rotary calciner (SCC 3-01-023-99)	0.72	B	0.73	C
Sesquicarbonate process: fluid-bed calciner (SCC 3-01-023-99)	0.043	C	ND	NA
Rotary soda ash dryers (SCC 3-01-023-06)	0.50	C	0.52	D
Fluid-bed soda ash dryers/coolers (SCC 3-01-023-07)	0.030	C	0.39	D
Soda ash screening (SCC 3-01-023-99)	0.019	E	0.026	E
Soda ash storage/loading and unloading[c] (SCC 3-01-023-99)	0.0041	E	0.0051	E

[a] Filterable particulate matter is that material collected in the probe and filter of a Method 5 or Method 17 sampler. SCC = Source Classficiation Code. ND = no data. NA = not applicable.
[b] Total particulate matter includes filterable particulate and inorganic condensable particulate.
[c] For ambient temperature processes, all particulate matter emissions can be assumed to be filterable at ambient conditions; however, particulate sampling according to EPA Reference Method 5 involves the heating of the front half of the sampling train to temperatures that may vaporize some portion of this particulate matter, which will then recondense in the back half of the sampling train. For consistency, particulate matter measured as condensable according to Method 5 is reported as such.

product for economic reasons. Because of a lack of suitable emissions data for uncontrolled processes, both controlled and uncontrolled emission factors are presented for this industry. The uncontrolled emission factors have been calculated by applying nominal control efficiencies to the controlled emission factors.

Table 8.12-3 (Metric And English Units). UNCONTROLLED EMISSION FACTORS FOR PARTICULATE MATTER FROM SODIUM CARBONATE

Process	Nominal Control Efficiency (%)	Total[a]		
		kg/Mg Of Product	lb/ton Of Product	EMISSION FACTOR RATING
Ore mining (SCC 3-01-023-99)	99.9	1.6	3.3	D
Ore crushing and screening (SCC 3-01-023-99)	99.9	1.7	3.5	E
Ore transfer (SCC 3-01-023-99)	99.9	0.1	0.2	E
Monohydrate process: rotary ore calciner (SCC 3-01-023-04/05)	99.9	90	180	B
Sesquicarbonate process: rotary calciner (SCC 3-01-023-99)	99	36	72	D
Sesquicarbonate process: fluid-bed calciner (SCC 3-01-023-99)	99	2.1	4.3	D
Rotary soda ash dryers (SCC 3-01-023-06)	99	25	50	E
Fluid-bed soda ash dryers/coolers (SCC 3-01-023-07)	99	1.5	3.0	E
Soda ash screening (SCC 3-01-023-99)	99.9	10	19	E
Soda ash storage/loading and unloading (SCC 3-01-023-99)	99.9	2.6	5.2	E

[a] Values for uncontrolled total particulate matter can be assumed to include filterable particulate and both organic and inorganic condensable particulate. For processes operating at significantly greater than ambient temperatures, these factors have been calculated by applying the nominal control efficiency to the controlled (as-measured) filterable particulate emission factors above.
SCC = Source Classification Code.

Table 8.12-4 (Metric And English Units). UNCONTROLLED EMISSION FACTORS FOR CARBON DIOXIDE FROM SODIUM CARBONATE PRODUCTION[a]

EMISSION FACTOR RATING: E

Process	Emissions	
	kg/Mg Of Product	lb/ton Of Product
Monohydrate process: rotary ore calciner (SCC 3-01-023-04/05)	200	400
Sesquicarbonate process: rotary calciner (SCC 3-01-023-99)	150	310
Sesquicarbonate process: fluid-bed calciner (SCC 3-01-023-99)	90	180
Rotary soda ash dryers (SCC 3-01-023-06)	63	130

[a] Factors are derived from analyses during emission tests for criteria pollutants, rather than from fuel analyses and material balances. SCC = Source Classification Code. References 8-26.

References For Section 8.12

1. D. S. Kostick, "Soda Ash", *Mineral Commodity Summaries 1992*, U. S. Department Of The Interior, 1992.

2. D. S. Kostick, "Soda Ash", *Minerals Yearbook 1989, Volume I: Metals And Minerals*, U. S. Department Of The Interior, 1990.

3. *Directory Of Chemical Producers: United States of America, 1990*, SRI International, Menlo Park, CA, 1990.

4. L. Gribovicz, "FY 91 Annual Inspection Report: FMC-Wyoming Corporation, Westvaco Soda Ash Refinery", Wyoming Department Of Environmental Quality, Cheyenne, WY, 11 June 1991.

5. L. Gribovicz, "FY 92 Annual Inspection Report: General Chemical Partners, Green River Works", Wyoming Department Of Environmental Quality, Cheyenne, WY, 16 September 1991.

6. L. Gribovicz, "FY 92 Annual Inspection Report: Rhône-Poulenc Chemical Company, Big Island Mine and Refinery", Wyoming Department Of Environmental Quality, Cheyenne, WY, 17 December 1991.

7. L. Gribovicz, 91 Annual Inspection Report: Texasgulf Chemical Company, Granger Trona Mine & Soda Ash Refinery", Wyoming Department Of Environmental Quality, Cheyenne, WY, 15 July 1991.

8. "Stack Emissions Survey: General Chemical, Soda Ash Plant, Green River, Wyoming", Western Environmental Services And Testing, Inc., Casper, WY, February 1988.

9. "Stack Emissions Survey: General Chemical, Soda Ash Plant, Green River, Wyoming", Western Environmental Services And Testing, Inc., Casper, WY, November 1989.

10. "Rhône-Poulenc Wyoming Co. Particulate Emission Compliance Program", TRC Environmental Measurements Division, Englewood, CO, 21 May 1990.

11. "Rhône-Poulenc Wyoming Co. Particulate Emission Compliance Program", TRC Environmental Measurements Division, Englewood, CO, 6 July 1990.

12. "Stack Emissions Survey: FMC-Wyoming Corporation, Green River, Wyoming", FMC-Wyoming Corporation, Green River, WY, October 1990.

13. "Stack Emissions Survey: FMC-Wyoming Corporation, Green River, Wyoming", FMC-Wyoming Corporation, Green River, WY, February 1991.

14. "Stack Emissions Survey: FMC-Wyoming Corporation, Green River, Wyoming", FMC-Wyoming Corporation, Green River, WY, January 1991.

15. "Stack Emissions Survey: FMC-Wyoming Corporation, Green River, Wyoming", FMC-Wyoming Corporation, Green River, WY, October 1990.

16. "Compliance Test Report: FMC-Wyoming Corporation, Green River, Wyoming", FMC-Wyoming Corporation, Green River, WY, 6 June 1988.

17. "Compliance Test Report: FMC-Wyoming Corporation, Green River, Wyoming", FMC-Wyoming Corporation, Green River, WY, 24 May 1988.

18. "Compliance Test Report: FMC-Wyoming Corporation, Green River, Wyoming", FMC-Wyoming Corporation, Green River, WY, 28 August 1985.

19. "Stack Emissions Survey: FMC-Wyoming Corporation, Green River, Wyoming", FMC-Wyoming Corporation, Green River, WY, December 1990.

20. "Emission Measurement Test Report Of GR3A Crusher", The Emission Measurement People, Inc., Cañon City, CO, 16 October 1990.

21. "Stack Emissions Survey: TG Soda Ash, Inc., Granger, Wyoming", Western Environmental Services And Testing, Inc., Casper, WY, August 1989.

22. "Compliance Test Reports", Tenneco Minerals, Green River, WY, 30 November 1983.

23. "Compliance Test Reports", Tenneco Minerals, Green River, WY, 8 November 1983.

24. "Particulate Stack Sampling Reports", Texasgulf, Inc., Granger, WY, October 1977 — September 1978.

25. "Fluid Bed Dryer Emissions Certification Report", Texasgulf Chemicals Co., Granger, WY, 18 February 1985.

26. "Stack Emissions Survey: General Chemical, Soda Ash Plant, Green River, Wyoming", Western Environmental Services And Testing, Inc., Casper, WY, May 1987.

8.13 Sulfur Recovery

8.13.1 General[1-2]

Sulfur recovery refers to the conversion of hydrogen sulfide (H_2S) to elemental sulfur. Hydrogen sulfide is a byproduct of processing natural gas and refining high-sulfur crude oils. The most common conversion method used is the Claus process. Approximately 90 to 95 percent of recovered sulfur is produced by the Claus process. The Claus process typically recovers 95 to 97 percent of the hydrogen sulfide feedstream.

Over 5.9 million megagrams (Mg) (6.5 million tons) of sulfur were recovered in 1989, representing about 63 percent of the total elemental sulfur market in the U. S. The remainder was mined or imported. The average production rate of a sulfur recovery plant in the U. S. varies from 51 to 203 Mg (56 to 224 tons) per day.

8.13.2 Process Description[1-2]

Hydrogen sulfide, a byproduct of crude oil and natural gas processing, is recovered and converted to elemental sulfur by the Claus process. Figure 8.13-1 shows a typical Claus sulfur recovery unit. The process consists of multistage catalytic oxidation of hydrogen sulfide according to the following overall reaction:

$$2H_2S + O_2 \rightarrow 2S + 2H_2O \qquad (1)$$

Each catalytic stage consists of a gas reheater, a catalyst chamber, and a condenser.

The Claus process involves burning one-third of the H_2S with air in a reactor furnace to form sulfur dioxide (SO_2) according to the following reaction:

$$2H_2S + 3O_2 \rightarrow 2SO_2 + 2H_2O + \text{heat} \qquad (2)$$

The furnace normally operates at combustion chamber temperatures ranging from 980 to 1540°C (1800 to 2800°F) with pressures rarely higher than 70 kilopascals (kPa) (10 pounds per square inch absolute). Before entering a sulfur condenser, hot gas from the combustion chamber is quenched in a waste heat boiler that generates high to medium pressure steam. About 80 percent of the heat released could be recovered as useful energy. Liquid sulfur from the condenser runs through a seal leg into a covered pit from which it is pumped to trucks or railcars for shipment to end users. Approximately 65 to 70 percent of the sulfur is recovered. The cooled gases exiting the condenser are then sent to the catalyst beds.

The remaining uncombusted two-thirds of the hydrogen sulfide undergoes Claus reaction (reacts with SO_2) to form elemental sulfur as follows:

$$2H_2S + SO_2 \longleftrightarrow 3S + 2H_2O + \text{heat} \qquad (3)$$

The catalytic reactors operate at lower temperatures, ranging from 200 to 315°C (400 to 600°F). Alumina or bauxite is sometimes used as a catalyst. Because this reaction represents an equilibrium chemical reaction, it is not possible for a Claus plant to convert all the incoming sulfur compounds to elemental sulfur. Therefore, 2 or more stages are used in series to recover the sulfur. Each catalytic stage can recover half to two-thirds of the incoming sulfur. The number of catalytic stages depends upon the level of conversion desired. It is estimated that 95 to 97 percent overall recovery can be

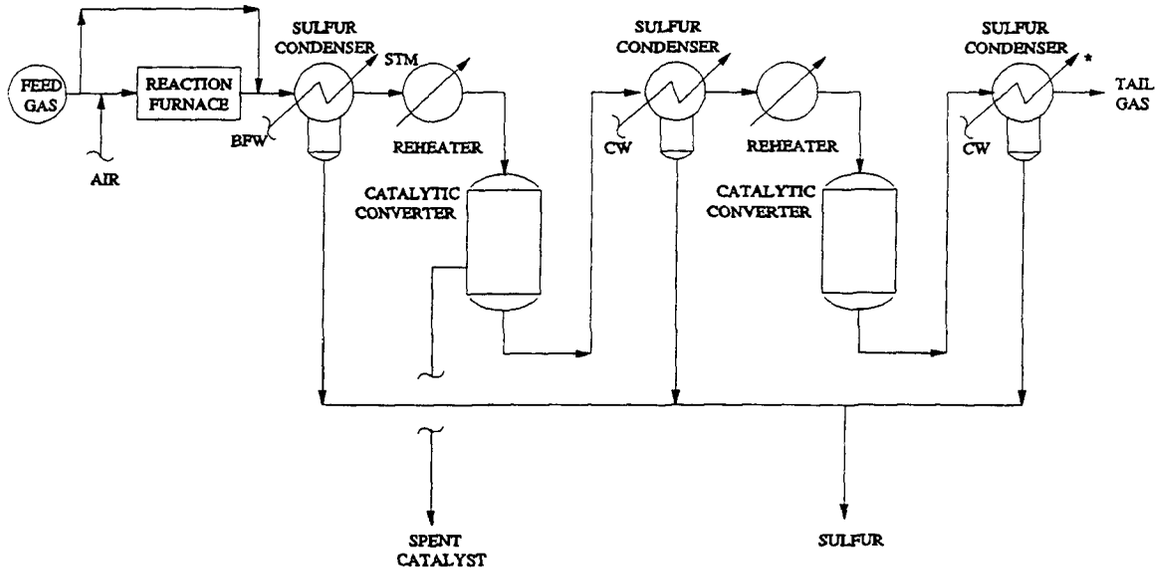

*ADDITIONAL CONVERTERS/CONDENSERS TO ACHIEVE ADDITIONAL RECOVERY OF ELEMENTAL SULFUR ARE OPTIONAL AT THIS POINT.

Figure 8.13-1. Typical Claus sulfur recovery unit. CW = Cooling water. STM = Steam. BFW = Boiler feed water.

achieved depending on the number of catalytic reaction stages and the type of reheating method used. If the sulfur recovery unit is located in a natural gas processing plant, the type of reheat employed is typically either auxiliary burners or heat exchangers, with steam reheat being used occasionally. If the sulfur recovery unit is located in a crude oil refinery, the typical reheat scheme uses 3536 to 4223 kPa (500 to 600 pounds per square inch guage [psig]) steam for reheating purposes. Most plants are now built with 2 catalytic stages, although some air quality jurisdictions require 3. From the condenser of the final catalytic stage, the process stream passes to some form of tailgas treatment process. The tailgas, containing H_2S, SO_2, sulfur vapor, and traces of other sulfur compounds formed in the combustion section, escapes with the inert gases from the tail end of the plant. Thus, it is frequently necessary to follow the Claus unit with a tailgas cleanup unit to achieve higher recovery.

In addition to the oxidation of H_2S to SO_2 and the reaction of SO_2 with H_2S in the reaction furnace, many other side reactions can and do occur in the furnace. Several of these possible side reactions are:

$$CO_2 + H_2S \rightarrow COS + H_2O \quad (4)$$

$$COS + H_2S \rightarrow CS_2 + H_2O \quad (5)$$

$$2COS \rightarrow CO_2 + CS_2 \quad (6)$$

8.13.3 Emissions And Controls[1-4]

Table 8.13-1 shows emission factors and recovery efficiencies for modified Claus sulfur recovery plants. Factors are expressed in units of kilograms per megagram (kg/Mg) and pounds per ton (lb/ton). Emissions from the Claus process are directly related to the recovery efficiency. Higher

Table 8.13-1 (Metric And English Units). EMISSION FACTORS FOR MODIFIED CLAUS SULFUR RECOVERY PLANTS

EMISSION FACTOR RATING: E

Number of Catalytic Stages	Average % Sulfur Recovery[a]	SO_2 Emissions	
		kg/Mg Of Sulfur Produced	lb/ton Of Sulfur Produced
1, Uncontrolled	93.5[b]	139[b,c]	278[b,c]
3, Uncontrolled	95.5[d]	94[c,d]	188[c,d]
4, Uncontrolled	96.5[e]	73[c,e]	145[c,e]
2, Controlled[f]	98.6	29	57
3, Controlled[g]	96.8	65	129

[a] Efficiencies are for feedgas streams with high H_2S concentrations. Gases with lower H_2S concentrations would have lower efficiencies. For example, a 2- or 3-stage plant could have a recovery efficiency of 95% for a 90% H_2S stream, 93% for 50% H_2S, and 90% for 15% H_2S.

[b] Reference 5. Based on net weight of pure sulfur produced. The emission factors were determined using the average of the percentage recovery of sulfur. Sulfur dioxide emissions are calculated from percentage sulfur recovery by one of the following equations:

$$SO_2 \text{ emissions (kg/Mg)} = \frac{(100\% \text{ recovery})}{\%\text{recovery}} \; 2000$$

$$SO_2 \text{ emissions (lb/ton)} = \frac{(100\%\text{recovery})}{\%\text{ recovery}} \; 4000$$

[c] Typical sulfur recovery ranges from 92 to 95%.

[d] Typical sulfur recovery ranges from 95 to 96%.

[e] Typical sulfur recovery ranges from 96 to 97%.

[f] Reference 6. EMISSION FACTOR RATING: B. Test data indicated sulfur recovery ranges from 98.3 to 98.8%.

[g] References 7-9. EMISSION FACTOR RATING: B. Test data indicated sulfur recovery ranges from 95 to 99.8%.recovery efficiencies. The efficiency depends upon several factors, including the number of catalytic stages, the concentrations of H_2S and contaminants in the feedstream, stoichiometric balance of gaseous components of the inlet, operating temperature, and catalyst maintenance.

recovery efficiencies mean less sulfur emitted in the tailgas. Older plants, or very small Claus plants producing less than 20 Mg (22 tons) per day of sulfur without tailgas cleanup, have varying sulfur recovery efficiencies. The efficiency depends upon several factors, including the number of catalytic stages, the concentrations of H_2S and contaminants in the feedstream, stoichiometric balance of gaseous components of the inlet, operating temperature, and catalyst maintenance.

A 2-bed catalytic Claus plant can achieve 94 to 96 percent efficiency. Recoveries range from 96 to 97.5 percent for a 3-bed catalytic plant and range from 97 to 98.5 percent for a 4-bed catalytic

plant. At normal operating temperatures and pressures, the Claus reaction is thermodynamically limited to 97 to 98 percent recovery. Tailgas from the Claus plant still contains 0.8 to 1.5 percent sulfur compounds.

Existing new source performance standards limit sulfur emissions from Claus sulfur recovery plants of greater than 20.32 Mg (22.40 ton) per day capacity to 0.025 percent by volume (250 parts per million volume [ppmv]). This limitation is effective at 0 percent oxygen on a dry basis if emissions are controlled by an oxidation control system or a reduction control system followed by incineration. This is comparable to the 99.8 to 99.9 percent control level for reduced sulfur.

Emissions from the Claus process may be reduced by: (1) extending the Claus reaction into a lower temperature liquid phase, (2) adding a scrubbing process to the Claus exhaust stream, or (3) incinerating the hydrogen sulfide gases to form sulfur dioxide.

Currently, there are 5 processes available that extend the Claus reaction into a lower temperature liquid phase including the BSR/selectox, Sulfreen, Cold Bed Absorption, Maxisulf, and IFP-1 processes. These processes take advantage of the enhanced Claus conversion at cooler temperatures in the catalytic stages. All of these processes give higher overall sulfur recoveries of 98 to 99 percent when following downstream of a typical 2- or 3-stage Claus sulfur recovery unit, and therefore reduce sulfur emissions.

Sulfur emissions can also be reduced by adding a scrubber at the tail end of the plant. There are essentially 2 generic types of tailgas scrubbing processes: oxidation tailgas scrubbers and reduction tailgas scrubbers. The first scrubbing process is used to scrub SO_2 from incinerated tailgas and recycle the concentrated SO_2 stream back to the Claus process for conversion to elemental sulfur. There are at least 3 oxidation scrubbing processes: the Wellman-Lord, Stauffer Aquaclaus, and IFP-2. Only the Wellman-Lord process has been applied successfully to U. S. refineries.

The Wellman-Lord process uses a wet generative process to reduce stack gas sulfur dioxide concentration to less than 250 ppmv and can achieve approximately 99.9 percent sulfur recovery. Claus plant tailgas is incinerated and all sulfur species are oxidized to form SO_2 in the Wellman-Lord process. Gases are then cooled and quenched to remove excess water and to reduce gas temperature to absorber conditions. The rich SO_2 gas is then reacted with a solution of sodium sulfite (Na_2SO_3) and sodium bisulfite ($NaHSO_3$) to form the bisulfite:

$$SO_2 + Na_2SO_3 + H_2O \rightarrow 2\,NaHSO_3 \qquad (7)$$

The offgas is reheated and vented to the atmosphere. The resulting bisulfite solution is boiled in an evaporator-crystallizer, where it decomposes to SO_2 and water (H_2O) vapor and sodium sulfite is precipitated:

$$2\,NaHSO_3 \rightarrow Na_2SO_3\downarrow + H_2O + SO_2\uparrow \qquad (8)$$

Sulfite crystals are separated and redissolved for reuse as lean solution in the absorber. The wet SO_2 gas is directed to a partial condenser where most of the water is condensed and reused to dissolve sulfite crystals. The enriched SO_2 stream is then recycled back to the Claus plant for conversion to elemental sulfur.

In the second type of scrubbing process, sulfur in the tailgas is converted to H_2S by hydrogenation in a reduction step. After hydrogenation, the tailgas is cooled and water is removed.

The cooled tailgas is then sent to the scrubber for H_2S removal prior to venting. There are at least 4 reduction scrubbing processes developed for tailgas sulfur removal: Beavon, Beavon MDEA, SCOT, and ARCO. In the Beavon process, H_2S is converted to sulfur outside the Claus unit using a lean H_2S-to-sulfur process (the Strefford process). The other 3 processes utilize conventional amine scrubbing and regeneration to remove H_2S and recycle back as Claus feed.

Emissions from the Claus process may also be reduced by incinerating sulfur-containing tailgases to form sulfur dioxide. In order to properly remove the sulfur, incinerators must operate at a temperature of 650°C (1,200°F) or higher if all the H_2S is to be combusted. Proper air-to-fuel ratios are needed to eliminate pluming from the incinerator stack. The stack should be equipped with analyzers to monitor the SO_2 level.

References For Section 8.13

1. B. Goar, *et al.*, "Sulfur Recovery Technology", *Energy Progress*, Vol. 6(2): 71-75, June 1986.

2. Written communication from Bruce Scott, Bruce Scott, Inc., San Rafael, CA, to David Hendricks, Pacific Environmental Services, Inc., Research Triangle Park, NC, February 28, 1992.

3. *Review Of New Source Performance Standards For Petroleum Refinery Claus Sulfur Recovery Plants*, EPA-450/3-83-014, U. S. Environmental Protection Agency, Research Triangle Park, NC, August 1983.

4. *Standards Support And Environmental Impact Statement, Volume 1: Proposed Standards Of Performance For Petroleum Refinery Sulfur Recovery Plants*, EPA-450/2-76-016a, U. S. Environmental Protection Agency, Research Triangle Park, NC, September 1976.

5. D. K. Beavon, "Abating Sulfur Plant Gases", *Pollution Engineering*, pp. 34-35, January/February 1972.

6. "Compliance Test Report: Collett Ventures Company, Chatom, Alabama", Environmental Science & Engineering, Inc., Gainesville, FL, May 1991.

7. "Compliance Test Report: Phillips Petroleum Company, Chatom, Alabama", Environmental Science & Engineering, Inc., Gainesville, FL, July 1991.

8. "Compliance Test Report: Mobil Exploration And Producing Southeast, Inc., Coden, Alabama", Cubix Corporation, Austin, TX, September 1990.

9. "Emission Test Report: Getty Oil Company, New Hope, TX," EMB Report No. 81-OSP-9, July 1981.

8.14 Hydrogen Cyanide

[Work In Progress]

9. FOOD AND AGRICULTURAL INDUSTRIES

This chapter comprises the activities that are performed before and during the production and preparation of consumer products. With agricultural crops, the land is tilled in preparation for planting, fertilizers and pesticides are applied, and the crops are harvested and stored before processing into consumer products. With animal husbandry, livestock and poultry are raised and sent to slaughterhouses. Food and agricultural industries yield either consumer products directly or related materials that are then used to produce such products (e. g., leather or cotton).

All of the steps in producing such consumer items, from crop planting or animal raising to the processing into end products, present the potential for air pollution problems. For each of these activities, pollutant emission factors are presented where data are available. The primary pollutants emitted by these processes are total organic compounds and particulate.

9.1 Tilling Operations

[Work In Progress]

9.2 Growing Operations

9.2.1 Fertilizer Application

9.2.2 Pesticide Application

9.2.3 Orchard Heaters

9.2.1 Fertilizer Application

[Work In Progress]

9.2.2 Pesticide Application

9.2.2.1 General[1-2]

Pesticides are substances or mixtures used to control plant and animal life for the purposes of increasing and improving agricultural production, protecting public health from pest-borne disease and discomfort, reducing property damage caused by pests, and improving the aesthetic quality of outdoor or indoor surroundings. Pesticides are used widely in agriculture, by homeowners, by industry, and by government agencies. The largest usage of chemicals with pesticidal activity, by weight of "active ingredient" (AI), is in agriculture. Agricultural pesticides are used for cost-effective control of weeds, insects, mites, fungi, nematodes, and other threats to the yield, quality, or safety of food. The annual U. S. usage of pesticide AIs (i. e., insecticides, herbicides, and fungicides) is over 800 million pounds.

Air emissions from pesticide use arise because of the volatile nature of many AIs, solvents, and other additives used in formulations, and of the dusty nature of some formulations. Most modern pesticides are organic compounds. Emissions can result directly during application or as the AI or solvent volatilizes over time from soil and vegetation. This discussion will focus on emission factors for volatilization. There are insufficient data available on particulate emissions to permit emission factor development.

9.2.2.2 Process Description[3-6]

Application Methods -

Pesticide application methods vary according to the target pest and to the crop or other value to be protected. In some cases, the pesticide is applied directly to the pest, and in others to the host plant. In still others, it is used on the soil or in an enclosed air space. Pesticide manufacturers have developed various formulations of AIs to meet both the pest control needs and the preferred application methods (or available equipment) of users. The types of formulations are dry, liquid, and aerosol.

Dry formulations can be dusts, granules, wettable and soluble powders, water dispersible granules, or baits. Dusts contain small particles and are subject to wind drift. Dusts also may present an efficacy problem if they do not remain on the target plant surfaces. Granular formulations are larger, from about 100 to 2,500 micrometers (μm), and are usually intended for soil application. Wettable powders and water-dispersible granules both form suspensions when mixed with water before application. Baits, which are about the same size as granules, contain the AI mixed with a food source for the target pest (e. g., bran or sawdust).

Liquid formulations may be solutions, emulsions (emulsifiable concentrates), aerosols, or fumigants. In a liquid solution, the AI is solubilized in either water or organic solvent. True solutions are formed when miscible liquids or soluble powders are dissolved in either water or organic liquids. Emulsifiable concentrates are made up of the AI, an organic solvent, and an emulsifier, which permits the pesticide to be mixed with water in the field. A flowable formulation contains an AI that is not amenable to the formation of a solution. Therefore, the AI is mixed with a liquid petroleum base and emulsifiers to make a creamy or powdery suspension that can be readily field-mixed with water.

Aerosols, which are liquids with an AI in solution with a solvent and a propellant, are used for fog or mist applications. The ranges of optimum droplet size, by target, are 10 to 50 μm for flying insects, 30 to 50 μm for foliage insects, 40 to 100 μm for foliage, and 250 to 500 μm for soil with drift avoidance.

Herbicides are usually applied as granules to the surface of the soil or are incorporated into the soil for field crops, but are applied directly to plant foliage to control brush and noxious weeds. Dusts or fine aerosols are often used for insecticides but not for herbicides. Fumigant use is limited to confined spaces. Some fumigants are soil-injected, and then sealed below the soil surface with a plastic sheeting cover to minimize vapor loss.

Several types of pesticide application equipment are used, including liquid pumps (manual and power operated), liquid atomizers (hydraulic energy, gaseous energy, and centrifugal energy), dry application, and soil application (liquid injection application).

9.2.2.3 Emissions And Controls[1,7-14]

Organic compounds and particulate matter are the principal air emissions from pesticide application. The active ingredients of most types of synthetic pesticides used in agriculture have some degree of volatility. Most are considered to be essentially nonvolatile or semivolatile organic compounds (SVOC) for analytical purposes, but a few are volatile (e. g., fumigants). Many widely used pesticide formulations are liquids and emulsifiable concentrates, which contain volatile organic solvents (e. g., xylene), emulsifiers, diluents, and other organics. In this discussion, all organics other than the AI that are liquid under ambient conditions, are considered to have the potential to volatilize from the formulation. Particulate matter emissions with adsorbed active ingredients can occur during application of dusts used as pesticide carriers, or from subsequent wind erosion. Emissions also may contain pesticide degradation products, which may or may not be volatile. Most pesticides, however, are sufficiently long lived to allow some volatilization before degradation occurs.

Processes affecting emissions through volatilization of agricultural pesticides applied to soils or plants have been studied in numerous laboratory and field research investigations. The 3 major parameters that influence the rate of volatilization are the nature of the AI, the meteorological conditions, and soil adsorption.

Of these 3 major parameters, the nature of the AI probably has the greatest effect. The nature of the AI encompasses physical properties, such as vapor pressure, Henry's law constant, and water solubility; and chemical properties, including soil particle adsorption and hydrolysis or other degradative mechanisms. At a given temperature, every AI has a characteristic Henry's law constant and vapor pressure. The evaporation rate of an AI is determined in large part by its vapor pressure, and the vapor pressure increases with temperature and decreases with adsorption of the AI to soil. The extent of volatilization depends in part on air and soil temperature. Temperature has a different effect on each component relative to its vapor pressure. An increase in temperature can increase or decrease volatilization because of its influence on other factors such as diffusion of the AI toward or away from the soil surface, and movement of the water in the soil. Usually, an increase in temperature enhances volatilization because the vapor pressure of the AI increases. Wind conditions also can affect the rate of AI volatilization. Increased wind and turbulence decrease the stagnant layers above a soil surface and increase the mixing of air components near the surface, thus increasing volatilization. The effects of the third major parameter, soil adsorption, depend not only on the chemical reactivity of the AI but to a great extent on the characteristics of the soil. Increased amounts of organic matter or clay in soils can increase adsorption and decrease the volatilization rate of many AIs, particularly the more volatile AIs that are nonionic, weakly polar molecules. The soil

moisture content can also influence the rate of vaporization of the weakly polar AIs. When soil is very dry, the volatility of the AI is lowered significantly, resulting in a decrease in emissions. The presence of water in the soil can accelerate the evaporation of pesticides because, as water evaporates from the soil surface, the AI present in the soil will be transported to the surface, either in solution or by codistillation or convection effects. This action is called the "wick effect" because the soil acts as a wick for movement of the AI.

Many materials used as inert ingredients in pesticide formulations are organic compounds that are volatile liquids or gases at ambient conditions. All of these compounds are considered to be volatile organic compounds (VOC). During the application of the pesticides and for a subsequent period of time, these organic compounds are volatilized into the atmosphere. Most of the liquid inert ingredients in agriculture pesticide formulations have higher vapor pressures than the AIs. However, not all inert ingredients are VOCs. Some liquid formulations may contain water, and solid formulations typically contain nonvolatile (solid) inert ingredients. Solid formulations contain small quantities of liquid organic compounds in their matrix. These compounds are often incorporated as carriers, stabilizers, surfactants, or emulsifiers, and after field application are susceptible to volatilization from the formulation. The VOC inert ingredients are the major contributors to emissions that occur within 30 days after application. It is assumed that 100 percent of these VOC inert ingredients volatilize within that time.

Two important mechanisms that increase emissions are diffusion and volatilization from plant surfaces. Pesticides in the soil diffuse upward to the surface as the pesticide at the soil surface volatilizes. A pesticide concentration gradient is thus formed between the depleted surface and the more concentrated subsurface. Temperature, pesticide concentration, and soil composition influence the rate of diffusion. The rate of volatilization from plant surfaces depends on the manner in which the pesticide covers the plant structure. Higher volatilization losses can occur from plant surfaces when the pesticide is present as droplets on the surface. Volatilization slows when the remaining pesticide is either left in the regions of the plant structure less exposed to air circulation or is adsorbed onto the plant material.

Alternative techniques for pesticide application or usage are not widely used, and those that are used are often intended to increase cost effectiveness. These techniques include (1) use of application equipment that increases the ratio of amount of pesticide on target plants or soil to that applied; (2) application using soil incorporation; (3) increased usage of water-soluble pesticides in place of solvent-based pesticides; (4) reformulation of pesticides to reduce volatility; and (5) use of integrated pest management (IPM) techniques to reduce the amount of pesticide needed. Microencapsulation is another technique in which the active ingredient is contained in various materials that slowly degrade to allow for timed release of pesticides.

9.2.2.4 Emission Factors[1,15-21]

The variety in pesticide AIs, formulations, application methods, and field conditions, and the limited data base on these aspects combine to preclude the development of single-value emission factors. Modeling approaches have been, therefore, adopted to derive emission factors from readily available data, and algorithms have been developed to calculate emissions for surface application and soil incorporation from product-specific data, supplemented, as necessary, by default values. Emission factors for pesticide AIs, derived through modeling approaches, are given in Table 9.2.2-4. Factors are expressed in units of kilograms per megagram (kg/Mg) and pounds per ton (lb/ton). No emission factors are estimated beyond 30 days because after that time degradation processes (e. g., hydrolysis or microbial degradation) and surface runoff can have major effects on the loss of AIs, and volatilization after that time may not be the primary loss mechanism. The emission factors calculated

using the model are rated "E" because the estimates are derived from mathematical equations using physical properties of the AIs. Because the factors were developed from a very limited data base, resulting emission estimates should be considered approximations. As additional data become available, the algorithm and emission factors will be revised, when appropriate, to incorporate the new data.

This modeling approach estimates emissions from volatilized organic material. No emission estimates were developed for particulate because the available data were inadequate to establish reliable emission factors. The modeled emission factors also address only surface-applied and soil-incorporated pesticides. In aerial application, drift effects predominate over volatilization, and insufficient data are currently available to develop emission factors for this application method.

The model covers the 2 key types of volatilization emissions, (1) those of active (pesticidal) ingredients, and (2) those VOC constituents of the inert (nonpesticidal) ingredients. For some formulations (e. g., liquids and emulsifiable concentrates), emissions of inert VOCs may be an order of magnitude or more higher than those of the AIs, but for other formulations (e. g., granules) the VOC emissions are either relatively less important or unimportant. Thus, both parts of the model are essential, and both depend on the fact that volatilization rates depend in large measure on the vapor pressure of specific ingredients, whether AIs or inerts. Use of the model, therefore, requires the collection of certain information for each pesticide application.

Both the nature of the pesticide and the method by which it is applied must either be known or estimated. Pesticide formulations contain both an AI and inert ingredients, and the pesticide volatilization algorithm is used to estimate their emissions separately. Ideally, the information available for the algorithm calculation will match closely the actual conditions. The following information is necessary to use the algorithm.

- Total quantity of formulation applied;
- Method by which the formulation was applied (the algorithm cannot be used for aerially applied pesticide formulations);
- Name of the specific AI(s) in the formulation;
- Vapor pressure of the AI(s);
- Type of formulation (e. g., emulsifiable concentrate, granules, microcapsules, powder);
- Percentage of inert ingredients; and
- Quantity or percentage of VOC in the inerts.

9.2.2.5 Use Of The Algorithm[1,18,20]

The algorithm for estimating volatilization emissions is applied in a 6-step procedure, as follows:

1. Determine both the application method and the quantity of pesticide product applied.
2. Determine the type of formulation used.
3. Determine the specific AI(s) in the formulation and its vapor pressure(s).
4. Determine the percentage of the AI (or each AI) present.

5. Determine the VOC content of the formulation.
6. Perform calculations of emissions.

Information for these steps can be found as follows:

- Item 1 — The quantity can be found either directly from the weight purchased or used for a given application or, alternately, by multiplying the application rate (e. g., kg/acre) times the number of units (acres) treated. The algorithm cannot be used for aerial application.

- Items 2, 3, and 4 — This information is presented on the labels of all pesticide containers. Alternatively, it can be obtained from either the manufacturer, end-use formulator, or local distributor. Table 9.2.2-1 provides vapor pressure data for selected AIs. If the trade name of the pesticide and the type of formulation are known, the specific AI in the formulation can be obtained from Reference 2 or similar sources. Table 9.2.2-2 presents the specific AIs found in several common trade name formulations. Assistance in determining the various formulations for specific AIs applied may be available from the National Agricultural Statistics Service, U. S. Department Of Agriculture, Washington, DC.

- Item 5 — The percent VOC content of the inert ingredient portion of the formulation can be requested from either the manufacturer or end-use formulator. Alternatively, the estimated average VOC content of the inert portions of several common types of formulations is given in Table 9.2.2-3.

- Item 6 — Emissions estimates are calculated separately for the AI using Table 9.2.2-4, and for the VOC inert ingredients as described below and illustrated in the example calculation.

Emissions Of Active Ingredients -

First, the total quantity of AI applied to the crop is calculated by multiplying the percent content of the AI in the formulation by the total quantity of applied formulation. Second, the vapor pressure of the specific AI(s) at 20 to 25°C is determined from Table 9.2.2-1, Reference 20, or other sources. Third, the vapor pressure range that corresponds to the vapor pressure of the specific AI is found in Table 9.2.2-4. Then the emission factor for the AI(s) is calculated. Finally, the total quantity of applied AI(s) is multiplied by the emission factor(s) to determine the total quantity of AI emissions within 30 days after application. Table 9.2.2-4 is not applicable to emissions from fumigant usage, because these gaseous or liquid products are highly volatile and would be rapidly discharged to the atmosphere.

Emissions Of VOC Inert Ingredients -

The total quantity of emissions because of VOCs in the inert ingredient portion of the formulation can be obtained by using the percent of the inert portion contained in the formulated product, the percent of the VOCs contained in the inert portion, and the total quantity of formulation applied to the crop. First, multiply the percentage of inerts in the formulation by the total quantity of applied formulation to obtain the total quantity of inert ingredients applied. Second, multiply the percentage of VOCs in the inert portion by the total quantity of inert ingredient applied to obtain the total quantity of VOC inert ingredients. If the VOC content is not known, use a default value from Table 9.2.2-3 appropriate to the formulation. Emissions of VOC inert ingredients are assumed to be 100 percent by 30 days after application.

Total Emissions -

Add the total quantity of VOC inert ingredients volatilized to the total quantity of emissions from the AI. The sum of these quantities represents the total emissions from the application of the pesticide formulation within 30 days after application.

Example Calculation -

3,629 kg, or 8,000 lb, of Spectracide® have been surface applied to cropland, and an estimate is desired of the total quantity of emissions within 30 days after application.

1. The active ingredient in Spectracide® is diazinon (Reference 2, or Table 9.2.2-2). The pesticide container states that the formulation is an emulsifiable concentrate containing 58 percent active ingredient and 42 percent inert ingredient.

2. Total quantity of AI applied:

   0.58 * 3,629 kg = 2,105 kg (4,640 lb) of diazinon applied

   = 2.105 Mg

   2.105 Mg * 1.1 ton/Mg = 2.32 tons of diazinon applied

From Table 9.2.2-1, the vapor pressure of diazinon is 6×10^{-5} millimeters (mm) mercury at about 25°C. From Table 9.2.2-4, the emission factor for AIs with vapor pressures between 1×10^{-6} and 1×10^{-4} during a 30-day interval after application is 350 kg/Mg (700 lb/ton) applied. This corresponds to a total quantity of diazinon volatilized of 737 kg (1,624 lb) over the 30-day interval.

3. From the pesticide container label, it is determined that the inert ingredient content of the formulation is 42 percent and, from Table 9.2.2.3, it can be determined that the average VOC content of the inert portion of emulsifiable concentrates is 56 percent.

   Total quantity of emissions from inert ingredients:

   0.42 * 3,629 kg * 0.56 = 854 kg (1,882 lb) of VOC inert ingredients

   One hundred percent of the VOC inert ingredients is assumed to volatilize within 30 days.

4. The total quantity of emissions during this 30-day interval is the sum of the emissions from inert ingredients and from the AI. In this example, the emissions are 854 kg (1,882 lb) of VOC plus 737 kg (1,624 lb) of AI, or 1,591 kg (3,506 lb).

Table 9.2.2-1. VAPOR PRESSURES OF SELECTED ACTIVE INGREDIENTS[a]

Active Ingredient	Vapor Pressure (mm Hg at 20 to 25°C)
1,3-Dichloropropene	29
2,4-D acid	8.0×10^{-6}
Acephate	1.7×10^{-6}
Alachlor	1.4×10^{-5}
Aldicarb	3.0×10^{-5}
Aldoxycarb	9×10^{-5}
Amitraz	2.6×10^{-6}
Amitrole (aminotriazole)	4.4×10^{-7}
Atrazine	2.9×10^{-7}
Azinphos-methyl	2.0×10^{-7}
Benefin (benfluralin)	6.6×10^{-5}
Benomyl	$< 1.0 \times 10^{-10}$
Bifenox	2.4×10^{-6}
Bromacil acid	3.1×10^{-7}
Bromoxynil butyrate ester	1.0×10^{-4}
Butylate	1.3×10^{-2}
Captan	8.0×10^{-8}
Carbaryl	1.2×10^{-6}
Carbofuran	6.0×10^{-7}
Chlorobenzilate	6.8×10^{-6}
Chloroneb	3.0×10^{-3}
Chloropicrin	18
Chlorothalonil	1.0×10^{-3} (estimated)
Chlorpyrifos	1.7×10^{-5}
Clomazone (dimethazone)	1.4×10^{-4}
Cyanazine	1.6×10^{-9}
Cyromazine	3.4×10^{-9}
DCNA (dicloran)	1.3×10^{-6}
DCPA (chlorthal-dimethyl; Dacthal®)	2.5×10^{-6}
Diazinon	6.0×10^{-5}
Dichlobenil	1.0×10^{-3}
Dicofol	4.0×10^{-7}
Dicrotofos	1.6×10^{-4}
Dimethoate	2.5×10^{-5}
Dinocap	4.0×10^{-8}

Table 9.2.2-1 (cont.).

Active Ingredient	Vapor Pressure (mm Hg at 20 to 25°C)
Disulfoton	1.5×10^{-4}
Diuron	6.9×10^{-8}
Endosulfan	1.7×10^{-7}
EPTC	3.4×10^{-2}
Ethalfluralin	8.8×10^{-5}
Ethion	2.4×10^{-6}
Ethoprop (ethoprophos)	3.8×10^{-4}
Fenamiphos	1.0×10^{-6}
Fenthion	2.8×10^{-6}
Fluometuron	9.4×10^{-7}
Fonofos	3.4×10^{-4}
Isofenphos	3.0×10^{-6}
Lindane	3.3×10^{-5}
Linuron	1.7×10^{-5}
Malathion	8.0×10^{-6}
Methamidophos	8.0×10^{-4}
Methazole	1.0×10^{-6}
Methiocarb (mercaptodimethur)	1.2×10^{-4}
Methomyl	5.0×10^{-5}
Methyl parathion	1.5×10^{-5}
Metolachlor	3.1×10^{-5}
Metribuzin	$< 1.0 \times 10^{-5}$
Mevinphos	1.3×10^{-4}
Molinate	5.6×10^{-3}
Naled	2.0×10^{-4}
Norflurazon	2.0×10^{-8}
Oxamyl	2.3×10^{-4}
Oxyfluorfen	2.0×10^{-7}
Parathion (ethyl parathion)	5.0×10^{-6}
PCNB	1.1×10^{-4}
Pendimethalin	9.4×10^{-6}
Permethrin	1.3×10^{-8}
Phorate	6.4×10^{-4}
Phosmet	4.9×10^{-7}
Profenofos	9.0×10^{-7}

Table 9.2.2-1 (cont.).

Active Ingredient	Vapor Pressure (mm Hg at 20 to 25°C)
Prometon	7.7×10^{-6}
Prometryn	1.2×10^{-6}
Propachlor	2.3×10^{-4}
Propanil	4.0×10^{-5}
Propargite	3.0×10^{-3}
Propazine	1.3×10^{-7}
Propoxur	9.7×10^{-6}
Siduron	4.0×10^{-9}
Simazine	2.2×10^{-8}
Tebuthiuron	2.0×10^{-6}
Terbacil	3.1×10^{-7}
Terbufos	3.2×10^{-4}
Thiobencarb	2.2×10^{-5}
Thiodicarb	1.0×10^{-7}
Toxaphene	4.0×10^{-6}
Triallate	1.1×10^{-4}
Tribufos	1.6×10^{-6}
Trichlorfon	2.0×10^{-6}
Trifluralin	1.1×10^{-4}
Triforine	2.0×10^{-7}

[a] Reference 20. Vapor pressures of other pesticide active ingredients can also be found there.

Table 9.2.2-2. TRADE NAMES FOR SELECTED ACTIVE INGREDIENTS[a]

Trade Names[b]	Active Ingredient[c]
Insecticides	
AC 8911	Phorate
Acephate-met	Methamidophos
Alkron®	Ethyl Parathion
Alleron®	Ethyl Parathion
Aphamite®	Ethyl Parathion
Bay 17147	Azinphos-methyl
Bay 19639	Disulfoton
Bay 70143	Carbofuran

Table 9.2.2-2 (cont.).

Trade Names[b]	Active Ingredient[c]
Bay 71628	Methamidophos
Benzoepin	Endosulfan
Beosit®	Endosulfan
Brodan®	Chlorpyrifos
BugMaster®	Carbaryl
BW-21-Z	Permethryn
Carbamine®	Carbaryl
Carfene®	Azinphos-methyl
Cekubaryl®	Carbaryl
Cekudifol®	Dicofol
Cekuthoate®	Dimethoate
CGA-15324	Profenofos
Chlorpyrifos 99%	Chlorpyrifos
Chlorthiepin®	Endosulfan
Comite®	Propargite
Corothion®	Ethyl Parathion
Crisulfan®	Endosulfan
Crunch®	Carbaryl
Curacron	Profenofos
Curaterr®	Carbofuran
Cyclodan®	Endosulfan
Cygon 400®	Dimethoate
D1221	Carbofuran
Daphene®	Dimethoate
Dazzel®	Diazinon
Denapon®	Carbaryl
Devicarb®	Carbaryl
Devigon®	Dimethoate
Devisulphan®	Endosulfan
Devithion®	Methyl Parathion
Diagran®	Diazinon
Dianon®	Diazinon
Diaterr-Fos®	Diazinon
Diazajet®	Diazinon
Diazatol®	Diazinon
Diazide®	Diazinon
Dicarbam®	Carbaryl

Table 9.2.2-2 (cont.).

Trade Names[b]	Active Ingredient[c]
Dicomite®	Dicofol
Dimethogen®	Dimethoate
Dimet®	Dimethoate
Dizinon®	Diazinon
DPX 1410	Oxamyl
Dyzol®	Diazinon
E-605	Ethyl Parathion
Ectiban®	Permethryn
Endocide®	Endosulfan
Endosol®	Endosulfan
ENT 27226	Propargite
ENT27164	Carbofuran
Eradex®	Chlorpyrifos
Ethoprop	Ethoprop
Ethoprophos	Ethoprop
Ethylthiodemeton	Disulfoton
Etilon®	Ethyl Parathion
Fezudin	Diazinon
FMC-5462	Endosulfan
FMC-33297	Permethryn
Fonofos	Dyfonate
Force®	Tefluthrin
Fosfamid	Dimethoate
Furacarb®	Carbofuran
G-24480	Diazinon
Gardentox®	Diazinon
Gearphos®	Methyl Parathion
Golden Leaf Tobacco Spray®	Endosulfan
Hexavin®	Carbaryl
Hoe 2671	Endosulfan
Indothrin®	Permethryn
Insectophene®	Endosulfan
Insyst-D®	Disulfoton
Karbaspray®	Carbaryl
Kayazinon®	Diazinon
Kayazol®	Diazinon
Kryocide®	Cryolite

Table 9.2.2-2 (cont.).

Trade Names[b]	Active Ingredient[c]
Lannate® LV	Methomyl
Larvin®	Thiodicarb
Metafos	Methyl Parathion
Metaphos®	Methyl Parathion
Methomex®	Methomyl
Methyl	Methyl Parathion
Metiltriazotion	Azinphos-methyl
Nipsan®	Diazinon
Niran®	Ethyl Parathion
Nivral®	Thiodicarb
NRDC 143	Permethryn
Ortho 124120	Acephate
Orthophos®	Ethyl Parathion
Panthion®	Ethyl Parathion
Paramar®	Ethyl Parathion
Paraphos®	Ethyl Parathion
Parathene®	Ethyl Parathion
Parathion	Methyl Parathion
Parathion	Ethyl Parathion
Parawet®	Ethyl Parathion
Partron M®	Methyl Parathion
Penncap-M®	Methyl Parathion
Phoskil®	Ethyl Parathion
Piridane®	Chlorpyrifos
Polycron®	Profenofos
PP 557	Permethryn
Pramex®	Permethryn
Prokil®	Cryolite
PT265®	Diazinon
Qamlin®	Permethryn
Rampart®	Phorate
Rhodiatox®	Ethyl Parathion
S276	Disulfoton
SD 8530	Trimethacarb
Septene®	Carbaryl
Sevin 5 Pellets®	Carbaryl
Soprathion®	Ethyl Parathion

Table 9.2.2-2 (cont.).

Trade Names[b]	Active Ingredient[c]
Spectracide®	Diazinon
SRA 5172	Methamidophos
Stathion®	Ethyl Parathion
Tekwaisa®	Methyl Parathion
Temik®	Aldicarb
Tercyl®	Carbaryl
Thimul®	Endosulfan
Thiodan	Endosulfan
Thiofor®	Endosulfan
Thiophos	Ethyl Parathion
Tricarnam®	Carbaryl
Trimetion®	Dimethoate
UC 51762	Thiodicarb
UC 27867	Trimethacarb
Uniroyal D014	Propargite
Yaltox®	Carbofuran
None listed	Dicrotophos
None listed	Terbufos
Herbicides	
A-4D	2,4-D
AC 92553	Pendimethalin
Acclaim	Fenoxaprop-ethyl
Acme MCPA Amine 4®	MCPA
Aljaden®	Sethoxydim
Amiben®	Chloramben
Amilon®-WP	Chloramben
Amine®	MCPA
Aqua-Kleen®	2,4-D
Arrhenal®	DSMA
Arsinyl®	DSMA
Assure®	Quizalofop-ethyl
Avadex® BW	Triallate
Banlene Plus®	MCPA
Banvel®	Dicamba
Barrage®	2,4-D
Basagran	Bentazon
Bay 30130	Propanil

Table 9.2.2-2 (cont.).

Trade Names[b]	Active Ingredient[c]
Bay DIC 1468	Metribuzin
Bay 94337	Metribuzin
Benefex®	Benefin
Benfluralin	Benefin
Bentazon	Bentazon
Bethrodine	Benefin
BH® MCPA	MCPA
Bioxone®	Methazole
Blazer®	Aciflurofen
Bolero®	Thiobencarb
Border-Master®	MCPA
Brominex®	Bromoxynil
C-2059	Fluometuron
Cekuiron®	Diuron
Cekuquat®	Paraquat
Cekusima®	Simazine
CGA-24705	Metolachlor
Checkmate®	Sethoxydim
Chloroxone®	2,4-D
Classic®	Chlorimuron-ethyl
Clomazone	Clomazone
Command®	Clomazone
CP50144	Alachlor
Crisuron®	Diuron
Croprider®	2,4-D
Dacthal®	DCPA
Dailon®	Diuron
Depon®	Fenoxaprop-ethyl
Dextrone®	Paraquat
Di-Tac®	DSMA
Diater®	Diuron
DMA	DSMA
DMA-100®	DSMA
DPA	Propanil
DPX-Y6202	Quizalofop-ethyl
EL-110	Benefin
EL-161	Ethalfluralin

Table 9.2.2-2 (cont.).

Trade Names[b]	Active Ingredient[c]
Emulsamine®	2,4-D
Esgram®	Paraquat
Excel®	Fenoxaprop-ethyl
EXP-3864	Quizalofop-ethyl
Expand®	Sethoxydim
Far-Go®	Triallate
Farmco Diuron®	Diuron
Farmco Atrazine Gesaprim®	Atrazine
Fervinal®	Sethoxydim
Ferxone®	2,4-D
Furore®	Fenoxaprop-ethyl
Fusilade 2000	Fluazifop-p-butyl
G-30027	Atrazine
G-34161	Prometryn
G-34162	Ametryn
Gamit®	Clomazone
Genate Plus®	Butylate
Glyphosate Isopropylamine Salt	Glyphosate
Goldquat® 276	Paraquat
Grasidim®	Sethoxydim
HerbAll®	MSMA
Herbaxon®	Paraquat
Herbixol®	Diuron
Higalcoton®	Fluometuron
Hoe 002810	Linuron
Hoe-023408	Diclofop-methyl
Hoe-Grass®	Diclofop-methyl
Hoelon®	Diclofop-methyl
Illoxan®	Diclofop-methyl
Kilsem®	MCPA
Lasso®	Alachlor
Lazo®	Alachlor
Legumex Extra®	MCPA
Lexone® 4L	Metribuzin
Lexone® DF®	Metribuzin
Linorox®	Linuron
LS 801213	Aciflurofen

Table 9.2.2-2 (cont.).

Trade Names[b]	Active Ingredient[c]
M.T.F.®	Trifluralin
Magister®	Clomazone
Mephanac®	MCPA
Merge 823®	MSMA
Methar® 30	DSMA
Mezopur®	Methazole
Monosodium methane arsenate	MSMA
Nabu®	Sethoxydim
Option®	Fenoxaprop-ethyl
Oxydiazol	Methazole
Paxilon®	Methazole
Pillarquat®	Paraquat
Pillarxone®	Paraquat
Pillarzo®	Alachlor
Pilot®	Quizalofop-ethyl
Plantgard®	2,4-D
Pledge®	Bentazon
PP 005	Fluazifop-p-butyl
Primatol Q®	Prometryn
Probe	Methazole
Prop-Job®	Propanil
Propachlor	Propachlor
Prowl®	Pendimethalin
Rattler®	Glyphosate
RH-6201	Aciflurofen
Rodeo®	Glyphosate
Roundup®	Glyphosate
S 10145	Propanil
Sarclex®	Linuron
Saturno®	Thiobencarb
Saturn®	Thiobencarb
Scepter®	Imazaquin
SD 15418	Cyanazine
Sencor® 4	Metribuzin
Sencor® DF	Metribuzin
Shamrox®	MCPA
Sodar®	DSMA

Table 9.2.2-2 (cont.).

Trade Names[b]	Active Ingredient[c]
Sonalan®	Ethalfluralin
Squadron®	Imazaquin
Squadron®	Pendimethalin
Strel®	Propanil
Surpass®	Vernolate
Targa®	Quizalofop-ethyl
Target MSMA®	MSMA
Telok®	Norflurazon
Tigrex®	Diuron
Total®	Paraquat
Toxer®	Paraquat
Trans-Vert®	MSMA
Tri-4®	Trifluralin
Tri-Scept®	Imazaquin
Tributon®	2,4-D
Trifluralina 600®	Trifluralin
Trinatox D®	Ametryn
Tritex-Extra®	Sethoxydim
Tunic®	Methazole
Unidron®	Diuron
VCS 438	Methazole
Vegiben®	Chloramben
Vernam 10G	Vernolate
Vernam 7E	Vernolate
Vonduron®	Diuron
Weed-Rhap®	MCPA
Weed-B-Gon®	2,4-D
Weedatul®	2,4-D
Weedtrine-II®	2,4-D
Whip®	Fenoxaprop-ethyl
WL 19805	Cyanazine
Zeaphos®	Atrazine
Zelan®	MCPA
None listed	EPTC
None listed	Fomesafen
None listed	Molinate
None listed	Tridiphane

Table 9.2.2-2 (cont.).

Trade Names[b]	Active Ingredient[c]
Other Active Ingredients	
A7 Vapam®	Metam Sodium
Aquacide®	Diquat
Avicol®	PCNB
Carbam (MAF)	Metam Sodium
Clortocaf Ramato®	Chlorothalonil
Clortosip®	Chlorothalonil
Cotton Aide HC®	Cacodylic
De-Green®	Tribufos
DEF®	Tribufos
Deiquat	Diquat
Dextrone®	Diquat
E-Z-Off D®	Tribufos
Earthcide®	PCNB
Exotherm Termil®	Chlorothalonil
Folex®	Tribufos
Folosan®	PCNB
Fos-Fall A®	Tribufos
Karbation®	Metam Sodium
Kobutol®	PCNB
Kobu®	PCNB
Kypman® 80	Maneb
M-Diphar®	Maneb
Mancozin®	Mancozeb
Maneba®	Maneb
Manebe	Maneb
Manzate® 200	Mancozeb
Manzeb	Mancozeb
Manzin®	Mancozeb
Maposol®	Metam Sodium
Metam for the Acid	Metam Sodium
Moncide®	Cacodylic
Montar®	Cacodylic
Nemispor®	Mancozeb
Pentagen®	PCNB
Quintozene	PCNB
Rad-E-Cate® 25	Cacodylic

Table 9.2.2-2 (cont.).

Trade Names[b]	Active Ingredient[c]
Reglon	Diquat
Riozeb®	Mancozeb
RTU® PCNB	PCNB
Sectagon® II	Metam Sodium
SMDC	Metam Sodium
Soil-Prep®	Metam Sodium
Sopranebe®	Maneb
Superman® Maneb F	Maneb
Terrazan®	PCNB
Tersan 1991®	Benomyl
TriPCNB®	PCNB
Tubothane®	Maneb
Weedtrine-D®	Diquat
Ziman-Dithane®	Mancozeb
None listed	Dimethipin
None listed	Ethephon
None listed	Thiadiazuron

[a] Reference 2. See Reference 22 for selected pesticides used on major field crops.
[b] Reference 2.
[c] Common names. See Reference 2 for chemical names.

Table 9.2.2-3. AVERAGE VOC CONTENT OF PESTICIDE INERT INGREDIENT PORTION, BY FORMULATION TYPE[a]

Formulation Type	Average VOC Content Of Inert Position (wt. %)
Oils	66
Solution/liquid (ready to use)	20
Emulsifiable concentrate	56
Aqueous concentrate	21
Gel, paste, cream	40
Pressurized gas	29
Flowable (aqueous) concentrate	21
Microencapsulated	23
Pressurized liquid/sprays/foggers	39
Soluble powder	12
Impregnated material	38

Table 9.2.2-3 (cont.).

Formulation Type	Average VOC Content Of Inert Position (wt. %)
Pellet/tablet/cake/briquette	27
Wettable powder	25
Dust/powder	21
Dry flowable	28
Granule/flake	25
Suspension	15
Paint/coatings	64

[a] Reference 21.

Table 9.2.2-4 (Metric And English Units).
UNCONTROLLED EMISSION FACTORS FOR PESTICIDE ACTIVE INGREDIENTS[a]

EMISSION FACTOR RATING: E

Vapor Pressure Range (mm Hg at 20 to 25°C)[b]	Emission Factor[c]	
	kg/Mg	lb/ton
Surface application (SCC 24-61-800-001)		
1×10^{-4} to 1×10^{-6}	350	700
$>1 \times 10^{-4}$	580	1,160
Soil incorporation (SCC 24-61-800-002)		
$<1 \times 10^{-6}$	2.7	5.4
1×10^{-4} to 1×10^{-6}	21	42
$>1 \times 10^{-4}$	52	104

[a] Factors are functions of application method and vapor pressure. SCC = Source Classification Code.
[b] See Reference 20 for vapor pressures of specific active ingredients.
[c] References 1,15-18. Expressed as equivalent weight of active ingredients volatilized/unit weight of active ingredients applied.

References For Section 9.2.2

1. *Emission Factor Documentation For AP-42 Section 9.2.2, Pesticide Application*, EPA Contract No. 68-D2-0159, Midwest Research Institute, Kansas City, MO, September 1994.

2. *Farm Chemicals Handbook - 1992*, Meister Publishing Company, Willoughby, OH, 1992.

4. L. E. Bode, *et al.*, eds., *Pesticide Formulations And Applications Systems*, Volume 10, American Society For Testing And Materials (ASTM), Philadelphia, PA, 1990.

5. T. S. Colvin and J. H. Turner, *Applying Pesticides*, 3rd Edition, American Association Of Vocational Materials, Athens, Georgia, 1988.

6. G. A. Matthews, *Pesticide Application Methods*, Longham Groups Limited, New York, 1979.

7. D. J. Arnold, "Fate Of Pesticides In Soil: Predictive And Practical Aspects", *Environmental Fate Of Pesticides*, Wiley & Sons, New York, 1990.

8. A. W. White, *et al.*, "Trifluralin Losses From A Soybean Field", *Journal Of Environmental Quality*, *6*(1):105-110, 1977.

9. D. E. Glotfelty, "Pathways Of Pesticide Dispersion In The Environment", *Agricultural Chemicals Of The Future*, Rowman And Allanheld, Totowa, NJ, 1985.

10. J. W. Hamaker, "Diffusion And Volatilization", *Organic Chemicals In The Soil Environment*, Dekker, New York, 1972.

11. R. Mayer, *et al.*, "Models For Predicting Volatilization Of Soil-incorporated Pesticides", *Proceedings Of The American Soil Scientists*, *38*:563-568, 1974.

12. G. S. Hartley, "Evaporation Of Pesticides", *Pesticidal Formulations Research Advances In Chemistry, Series 86*, American Chemical Society, Washington, DC, 1969.

13. A. W. Taylor, *et al.*, "Volatilization Of Dieldrin And Heptachlor From A Maize Field", *Journal Of Agricultural Food Chemistry*, *24*(3):625-631, 1976.

14. A. W. Taylor, "Post-application Volatilization Of Pesticides Under Field Conditions", *Journal Of Air Pollution Control Association*, *28*(9):922-927, 1978.

15. W. A. Jury, *et al.*, "Use Of Models For Assessing Relative Volatility, Mobility, And Persistence Of Pesticides And Other Trace Organics In Soil Systems", *Hazard Assessment Of Chemicals: Current Developments*, *2*:1-43, 1983.

16. W. A. Jury, *et al.*, "Behavior Assessment Model For Trace Organics In Soil: I. Model Description", *Journal Of Environmental Quality*, *12*(4):558-564, 1983.

17. W. A. Jury, *et al.*, "Behavior Assessment Model For Trace Organics In Soil: II. Chemical Classification And Parameter Sensitivity", *Journal Of Environmental Quality*, *13*(4):567-572, 1984.

18. W. A. Jury, *et al.*, "Behavior Assessment Model For Trace Organics In Soil: III. Application Of Screening Model", *Journal Of Environmental Quality*, *13*(4):573-579, 1984.

19. *Alternative Control Technology Document: Control Of VOC Emissions From The Application Of Agricultural Pesticides*, EPA-453/R-92-011, U. S. Environmental Protection Agency, Research Triangle Park, NC, March 1993.

20. R. D. Wauchope, *et al.*, "The SCS/ARS/CES Pesticide Properties Database For Environmental Decision-making", *Reviews Of Environmental Contamination And Toxicology*, Springer-Verlag, New York, 1992.

21. Written communication from California Environmental Protection Agency, Department Of Pesticide Regulation, Sacramento, CA, to D. Safriet, U. S. Environmental Protection Agency, Research Triangle Park, NC, December 6, 1993.

22. *Agricultural Chemical Usage: 1991 Field Crops Summary*, U.S. Department of Agriculture, Washington, DC, March 1992.

9.2.3 Orchard Heaters

9.2.3.1 General[1-6]

Orchard heaters are commonly used in various areas of the United States to prevent frost damage to fruit and fruit trees. The 5 common types of orchard heaters—pipeline, lazy flame, return stack, cone, and solid fuel—are shown in Figure 9.2.3-1. The pipeline heater system is operated from a central control and fuel is distributed by a piping system from a centrally located tank. Lazy flame, return stack, and cone heaters contain integral fuel reservoirs, but can be converted to a pipeline system. Solid fuel heaters usually consist only of solid briquettes, which are placed on the ground and ignited.

The ambient temperature at which orchard heaters are required is determined primarily by the type of fruit and stage of maturity, by the daytime temperatures, and by the moisture content of the soil and air.

During a heavy thermal inversion, both convective and radiant heating methods are useful in preventing frost damage; there is little difference in the effectiveness of the various heaters. The temperature response for a given fuel rate is about the same for each type of heater as long as the heater is clean and does not leak. When there is little or no thermal inversion, radiant heat provided by pipeline, return stack, or cone heaters is the most effective method for preventing damage.

Proper location of the heaters is essential to the uniformity of the radiant heat distributed among the trees. Heaters are usually located in the center space between 4 trees and are staggered from 1 row to the next. Extra heaters are used on the borders of the orchard.

9.2.3 Emissions[1,6]

Emissions from orchard heaters are dependent on the fuel usage rate and the type of heater. Pipeline heaters have the lowest particulate emission rates of all orchard heaters. Hydrocarbon emissions are negligible in the pipeline heaters and in lazy flame, return stack, and cone heaters that have been converted to a pipeline system. Nearly all of the hydrocarbon losses are evaporative losses from fuel contained in the heater reservoir. Because of the low burning temperatures used, nitrogen oxide emissions are negligible.

Emission factors for the different types of orchard heaters are presented in Table 9.2.3-1 and Figure 9.2.3-2. Factors are expressed in units of kilograms per heater-hour (kg/htr-hr) and pounds per heater-hour (lb/htr-hr).

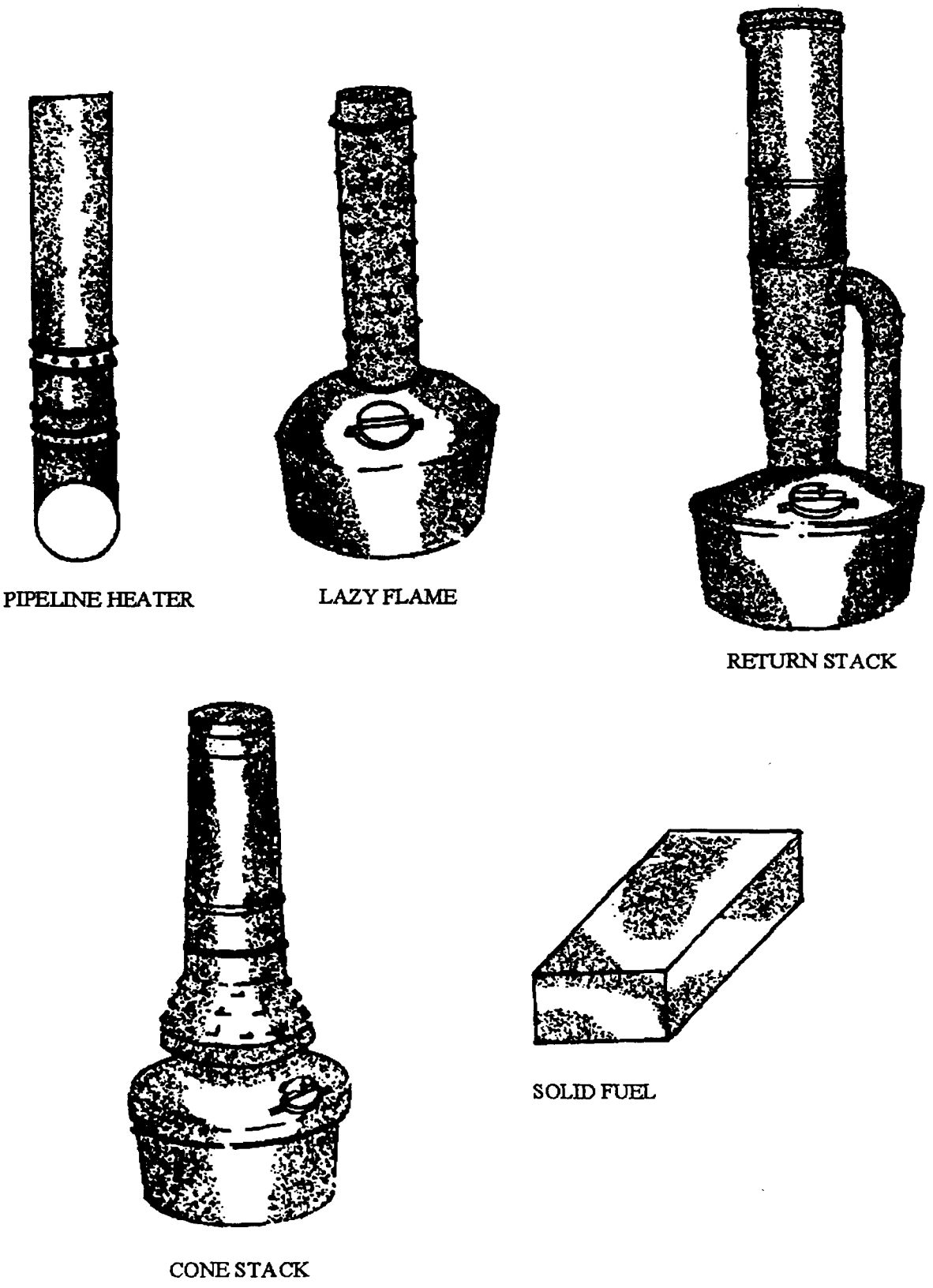

Figure 9.2.3-1. Types of orchard heaters.[6]

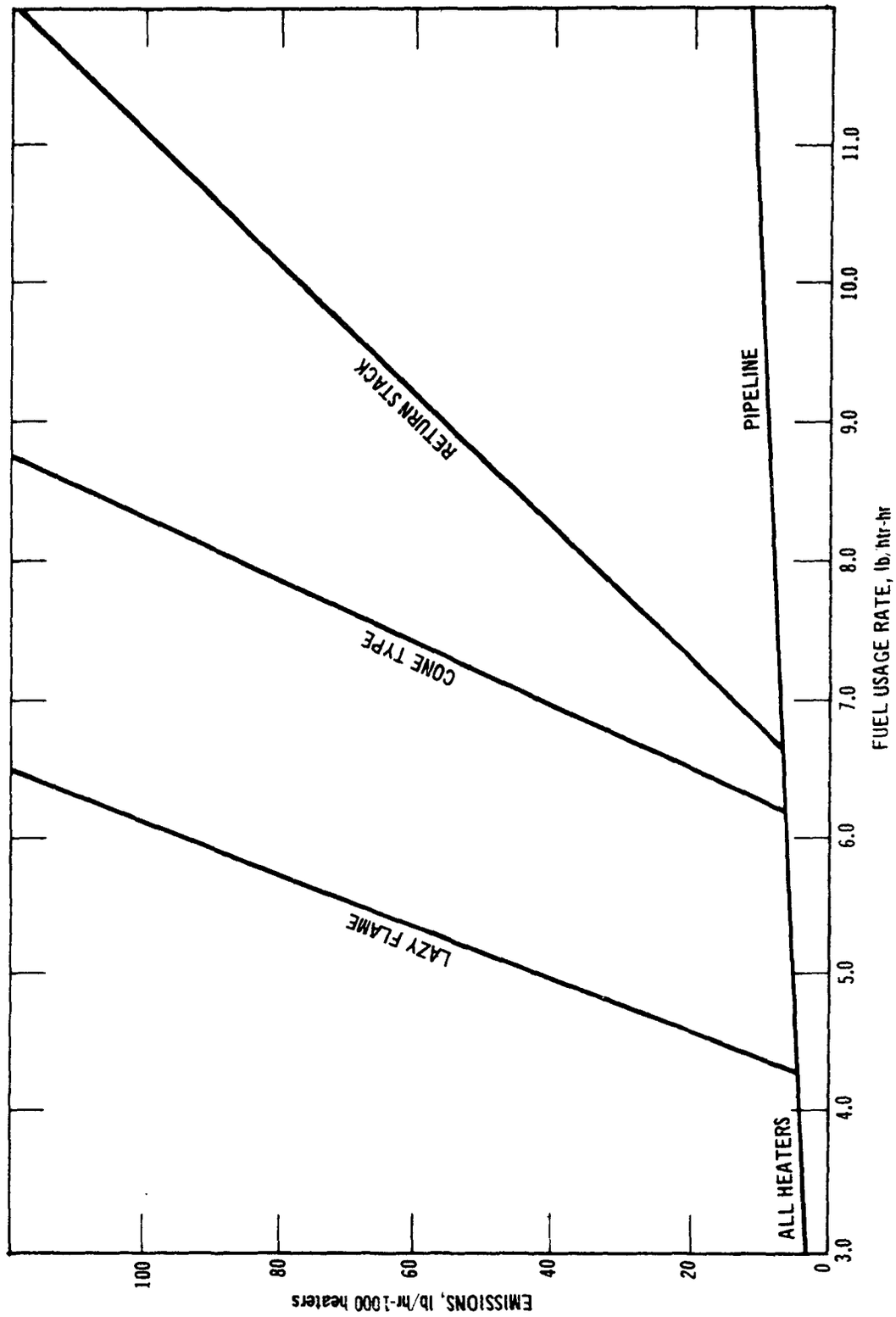

Figure 9.2.3-2. Particulate emissions from orchard heaters.[3,6]

Table 9.2.3-1 (Metric And English Units). EMISSION FACTORS FOR ORCHARD HEATERS[a]

EMISSION FACTOR RATING: C

Pollutant	Type Of Heater				
	Pipeline	Lazy Flame	Return Stack	Cone	Solid Fuel
Particulate					
kg/htr-hr	—[b]	—[b]	—[b]	—[b]	0.023
lb/htr-hr	—[b]	—[b]	—[b]	—[b]	0.05
Sulfur oxides[c]					
kg/htr-hr	0.06S[d]	0.05S	0.06S	0.06S	ND
lb/htr-hr	0.13S	0.11S	0.14S	0.14S	ND
Carbon monoxide					
kg/htr-hr	2.8	ND	ND	ND	ND
lb/htr-hr	6.2	ND	ND	ND	ND
VOCs[e]					
kg/htr-hr	Neg	7.3	7.3	7.3	Neg
lb/htr-hr	Neg	16.0	16.0	16.0	Neg
Nitrogen oxides[f]					
kg/htr-hr	Neg	Neg	Neg	Neg	Neg
lb/htr-hr	Neg	Neg	Neg	Neg	Neg

[a] References 1,3-4, and 6. ND = no data. Neg = negligible.
[b] Particulate emissions for pipeline, lazy flame, return stack, and cone heaters are shown in Figure 9.2.3-2.
[c] Based on emission factors for fuel oil combustion in Section 1.3.
[d] S = sulfur content.
[e] Reference 1. Evaporative losses only. Hydrocarbon emissions from combustion are considered negligible. Evaporative hydrocarbon losses for units that are part of a pipeline system are negligible.
[f] Little nitrogen oxides are formed because of the relatively low combustion temperatures.

References For Section 9.2.3

1. Air Pollution In Ventura County, County Of Ventura Health Department, Santa Paula, CA, June 1966.

2. Frost Protection In Citrus, Agricultural Extension Service, University Of California, Ventura, CA, November 1967.

3. Personal communication with Mr. Wesley Snowden, Valentine, Fisher, And Tomlinson, Consulting Engineers, Seattle, WA, May 1971.

4. Communication with the Smith Energy Company, Los Angeles, CA, January 1968.

5. Communication with Agricultural Extension Service, University Of California, Ventura, CA, October 1969.

6. Personal communication with Mr. Ted Wakai, Air Pollution Control District, County Of Ventura, Ojai, CA, May 1972.

9.3 Harvesting Operations

9.3.1 Cotton Harvesting

9.3.2 Grain Harvesting

9.3.3 Rice Harvesting

9.3.4 Cane Sugar Harvesting

9.3.1 Cotton Harvesting

9.3.1.1 General

Wherever it is grown in the U. S., cotton is defoliated or desiccated prior to harvest. Defoliants are used on the taller varieties of cotton that are machine picked for lint and seed cotton, and desiccants usually are used on short, stormproof cotton varieties of lower yield that are harvested by mechanical stripper equipment. More than 99 percent of the national cotton area is harvested mechanically. The 2 principal harvest methods are machine picking, with 70 percent of the harvest from 61 percent of the area, and machine stripping, with 29 percent of the harvest from 39 percent of the area. Picking is practiced throughout the cotton regions of the U. S., and stripping is limited chiefly to the dry plains of Texas and Oklahoma.

Defoliation may be defined as the process by which leaves are abscised from the plant. The process may be initiated by drought stress, low temperatures, or disease, or it may be chemically induced by topically applied defoliant agents or by overfertilization. The process helps lodged plants to return to an erect position, removes the leaves that can clog the spindles of the picking machine and stain the fiber, accelerates the opening of mature bolls, and reduces boll rots. Desiccation by chemicals is the drying or rapid killing of the leaf blades and petioles, with the leaves remaining in a withered state on the plant. Harvest-aid chemicals are applied to cotton as water-based spray, either by aircraft or by a ground machine.

Mechanical cotton pickers, as the name implies, pick locks of seed cotton from open cotton bolls and leave the empty burs and unopened bolls on the plant. Requiring only 1 operator, typical modern pickers are self-propelled and can simultaneously harvest 2 rows of cotton at a speed of 1.1 to 1.6 meters per second (m/s) (2.5 - 3.6 miles per hour [mph]). When the picker basket gets filled with seed cotton, the machine is driven to a cotton trailer at the edge of the field. As the basket is hydraulically raised and tilted, the top swings open allowing the cotton to fall into the trailer. When the trailer is full, it is pulled from the field, usually by pickup truck, and taken to a cotton gin.

Mechanical cotton strippers remove open and unopened bolls, along with burs, leaves, and stems from cotton plants, leaving only bare branches. Tractor-mounted, tractor-pulled, or self-propelled strippers require only 1 operator. They harvest from 1 to 4 rows of cotton at speeds of 1.8 to 2.7 m/s (4.0 - 6.0 mph). After the cotton is stripped, it enters a conveying system that carries it from the stripping unit to an elevator. Most conveyers utilize either augers or a series of rotating spike-toothed cylinders to move the cotton, accomplishing some cleaning by moving the cotton over perforated, slotted, or wire mesh screen. Dry plant material (burs, stems, and leaves) is crushed and dropped through openings to the ground. Blown air is sometimes used to assist cleaning.

9.3.1.2 Emissions And Controls

Emission factors for the drifting of major chemicals applied to cotton were compiled from literature and reported in Reference 1. In addition, drift losses from arsenic acid spraying were developed by field testing. Two off-target collection stations, with 6 air samplers each, were located downwind from the ground spraying operations. The measured concentration was applied to an infinite line source atmosphere diffusion model (in reverse) to calculate the drift emission rate. This was in turn used for the final emission factor calculation. The emissions occur from July to October, preceding by 2 weeks the period of harvest in each cotton producing region. The drift emission

factor for arsenic acid is 8 times lower than previously estimated, since Reference 1 used a ground rig rather than an airplane, and because of the low volatility of arsenic acid. Various methods of controlling drop size, proper timing of application, and modification of equipment are practices that can reduce drift hazards. Fluid additives have been used that increase the viscosity of the spray formulation, and thus decrease the number of fine droplets (< 100 micrometers [μm]). Spray nozzle design and orientation also control the droplet size spectrum. Drift emission factors for the defoliation or desiccation of cotton are listed in Table 9.3.1-1. Factors are expressed in units of grams per kilogram (g/kg) and pounds per ton (lb/ton).

Table 9.3.1-1 (Metric And English Units). EMISSION FACTORS FOR DEFOLIATION OR DESICCATION OF COTTON[a]

EMISSION FACTOR RATING: C

Pollutant	Emission Factor[b]	
	g/kg	lb/ton
Sodium chlorate	10.0	20.0
DEF®[c]	10.0	20.0
Arsenic acid	6.1	12.2
Paraquat	10.0	20.0

[a] Reference 1.
[b] Factor is in terms of quantity of drift per quantity applied.
[c] Pesticide trade name.

Three unit operations are involved in mechanical harvesting of cotton: harvesting, trailer loading (basket dumping), and transport of trailers in the field. Emissions from these operations are in the form of solid particulates. Particulate emissions (< 7 μm mean aerodynamic diameter) from these operations were developed in Reference 2. The particulates are composed mainly of raw cotton dust and solid dust, which contains free silica. Minor emissions include small quantities of pesticide, defoliant, and desiccant residues that are present in the emitted particulates. Dust concentrations from harvesting were measured by following each harvesting machine through the field at a constant distance directly downwind from the machine while staying in the visible plume centerline. The procedure for trailer loading was the same, but since the trailer is stationary while being loaded, it was necessary only to stand a fixed distance directly downwind from the trailer while the plume or puff passed over. Readings were taken upwind of all field activity to get background concentrations. Particulate emission factors for the principal types of cotton harvesting operations in the U. S. are shown in Table 9.3.1-2. The factors are based on average machine speed of 1.34 m/s (3.0 mph) for pickers, and 2.25 m/s (5.03 mph) for strippers, on a basket capacity of 109 kg (240 lb), on a trailer capacity of 6 baskets, on a lint cotton yield of 63.0 megagrams per square kilometer (Mg/km^2) (1.17 bales/acre) for pickers and 41.2 Mg/km^2 (0.77 bale/acre) for strippers, and on a transport speed of 4.47 m/s (10.0 mph). Factors are expressed in units of kg/km^2 and pounds per square mile (lb/mi^2). Analysis of particulate samples showed average free silica content of 7.9 percent for mechanical cotton picking and 2.3 percent for mechanical cotton stripping. Estimated maximum percentages for pesticides, defoliants, and desiccants from harvesting are also noted in Table 9.3.1-2. No current cotton harvesting equipment or practices provide for control of emissions. In fact,

Table 9.3.1-2 (Metric And English Units). PARTICULATE EMISSION FACTORS[a] FOR COTTON HARVESTING OPERATIONS

EMISSION FACTOR RATING: C

Type of Harvester	Harvesting		Trailer Loading		Transport		Total	
	kg/km^2	lb/mi^2	kg/km^2	lb/mi^2	kg/km^2	lb/mi^2	kg/km^2	lb/mi^2
Picker[b]								
Two-row, with basket	0.46	2.6	0.070	0.40	0.43	2.5	0.96	5.4
Stripper[c]								
Two-row, pulled trailer	7.4	42	NA	NA	0.28	1.6	7.7	44
Two-row, with basket	2.3	13	0.092	0.52	0.28	1.6	2.7	15
Four-row, with basket	2.3	13	0.092	0.52	0.28	1.6	2.7	15
Weighted average[d]	4.3	24	0.056	0.32	0.28	1.6	4.6	26

[a] Emission factors are from Reference 2 for particulate of <7 μm mean aerodynamic diameter. NA = not applicable.
[b] Free silica content is 7.9% maximum content of pesticides and defoliants is 0.02%.
[c] Free silica content is 2.3%; maximum content of pesticides and desiccants is 0.2%.
[d] The weighted average stripping factors are based on estimates that 2% of all strippers are 4-row models with baskets and, of the remainder, 40% are 2-row models pulling trailers and 60% are 2-row models with mounted baskets.

equipment design and operating practices tend to maximize emissions. Preharvest treatment (defoliation and desiccation) and harvest practices are timed to minimize moisture and trash content, so they also tend to maximize emissions. Soil dust emissions from field transport can be reduced by lowering vehicle speed.

References For Section 9.3.1

1. J. A. Peters and T. R. Blackwood, *Source Assessment: Defoliation Of Cotton—State Of The Art*, EPA-600/2-77-107g, U. S. Environmental Protection Agency, Cincinnati, OH, July 1977.

2. J. W. Snyder and T. R. Blackwood, *Source Assessment: Mechanical Harvesting Of Cotton—State Of The Art*, EPA-600/2-77-107d, U. S. Environmental Protection Agency, Cincinnati, OH, July 1977.

9.3.2 Grain Harvesting

9.3.2.1 General[1]

Harvesting of grain refers to the activities performed to obtain the cereal kernels of the plant for grain, or the entire plant for forage and/or silage uses. These activities are accomplished by machines that cut, thresh, screen, clean, bind, pick, and shell the crops in the field. Harvesting also includes loading harvested crops into trucks and transporting crops in the grain field.

Crops harvested for their cereal kernels are cut as close as possible to the inflorescence (the flowering portion containing the kernels). This portion is threshed, screened, and cleaned to separate the kernels. The grain is stored in the harvest machine while the remainder of the plant is discharged back onto the field.

Combines perform all of the above activities in 1 operation. Binder machines only cut the grain plants and tie them into bundles, or leave them in a row in the field (called a windrow). The bundles are allowed to dry for threshing later by a combine with a pickup attachment.

Corn harvesting requires the only exception to the above procedures. Corn is harvested by mechanical pickers, picker/shellers, and combines with corn head attachments. These machines cut and husk the ears from the standing stalk. The sheller unit also removes the kernels from the ear. After husking, a binder is sometimes used to bundle entire plants into piles (called shocks) to dry.

For forage and/or silage, mowers, crushers, windrowers, field choppers, binders, and similar cutting machines are used to harvest grasses, stalks, and cereal kernels. These machines cut the plants as close to the ground as possible and leave them in a windrow. The plants are later picked up and tied by a baler.

Harvested crops are loaded onto trucks in the field. Grain kernels are loaded through a spout from the combine, and forage and silage bales are manually or mechanically placed in the trucks. The harvested crop is then transported from the field to a storage facility.

9.3.2.2 Emissions And Controls[1]

Emissions are generated by 3 grain harvesting operations: (1) crop handling by the harvest machine, (2) loading of the harvested crop into trucks, and (3) transport by trucks in the field. Particulate matter, composed of soil dust and plant tissue fragments (chaff), may be entrained by wind. Particulate emissions from these operations (<7 micrometers [μm] mean aerodynamic diameter) were developed in Reference 1. For this study, collection stations with air samplers were located downwind (leeward) from the harvesting operations, and dust concentrations were measured at the visible plume centerline and at a constant distance behind the combines. For product loading, since the trailer is stationary while being loaded, it was necessary only to take measurements a fixed distance downwind from the trailer while the plume or puff passed over. The concentration measured for harvesting and loading was applied to a point source atmospheric diffusion model to calculate the source emission rate. For field transport, the air samplers were again placed a fixed distance downwind from the path of the truck, but this time the concentration measured was applied to a line source diffusion model. Readings taken upwind of all field activity gave background concentrations. Particulate emission factors for wheat and sorghum harvesting operations are shown in Table 9.3.2-1.

Table 9.3.2 (Metric And English Units). EMISSION RATES/FACTORS FROM GRAIN HARVESTING[a]

EMISSION FACTOR RATING: D

Operation	Emission Rate[b]				Emission Factor[c]			
	Wheat		Sorghum		Wheat		Sorghum	
	mg/s	lb/hr	mg/s	lb/hr	g/km^2	lb/mi^2	g/km^2	lb/mi^2
Harvest machine	3.4	0.027	23.0	0.18	170.0	0.96	1110.0	6.5
Truck loading	1.8	0.014	1.8	0.014	12.0	0.07	22.0	0.13
Field transport	47.0	0.37	47.0	0.37	110.0	0.65	200.0	1.2

[a] Reference 1.

[b] Assumptions from References 1 are an average combine speed of 3.36 meters per second, combine swath width of 6.07 meters, and a field transport speed of 4.48 meters per second.

[c] In addition to footnote b, assumptions are a truck loading time of 6 minutes, a truck capacity of 0.052 km^2 for wheat and 0.029 km^2 for sorghum, and a filled truck travel time of 125 seconds per load.

Emission rates are expressed in units of milligrams per second (mg/s) and pounds per hour (lb/hr); factors are expressed in units of grams per square kilometer (g/km^2) and pounds per square mile (lb/mi^2).

There are no control techniques specifically implemented for the reduction of air pollution emissions from grain harvesting. However, several practices and occurrences do affect emission rates and concentration. The use of terraces, contouring, and stripcropping to inhibit soil erosion will suppress the entrainment of harvested crop fragments in the wind. Shelterbelts, positioned perpendicular to the prevailing wind, will lower emissions by reducing the wind velocity across the field. By minimizing tillage and avoiding residue burning, the soil will remain consolidated and less prone to disturbance from transport activities.

Reference For Section 9.3.2

1. R. A. Wachten and T. R. Blackwood, *Source Assessment: Harvesting Of Grain—State Of The Art*, EPA-600/2-79-107f, U. S. Environmental Protection Agency, Cincinnati, OH, July 1977.

9.3.3 Rice Harvesting

[Work In Progress]

9.3.4 Cane Sugar Harvesting

[Work In Progress]

9.4 Livestock And Poultry Feed Operations

9.4.1 Cattle Feedlots

9.4.2 Swine Feedlots

9.4.3 Poultry Houses

9.4.4 Dairy Farms

9.4.1 Cattle Feedlots

[Work In Progress]

9.4.2 Swine Feedlots

[Work In Progress]

9.4.3 Poultry Houses

[Work In Progress]

9.4.4 Dairy Farms

[Work In Progress]

9.5 Animal And Meat Products Preparation

9.5.1 Meat Packing Plants

9.5.2 Meat Smokehouses

9.5.3 Meat Rendering Plants

9.5.4 Manure Processing

9.5.5 Poultry Slaughtering

9.5.1 Meat Packing Plants

[Work In Progress]

9.5.2 Meat Smokehouses

9.5.2.1 General[1-3,7-9]

Meat smokehouses are used to add flavor, color, and aroma to various meats, including pork, beef, poultry, and fish. Smokehouses were at one time used to smoke food for preservation, but refrigeration systems have effectively eliminated this use.

Four operations are typically involved in the production of smoked meat: (1) tempering or drying, (2) smoking, (3) cooking, and (4) chilling. However, not all smoked foods are cooked, thus eliminating the cooking and chilling processes from some operations. Important process parameters include cooking/smoking time, smoke generation temperature, humidity, smoke density, type of wood or liquid smoke, and product type.

The two types of smokehouses that are almost exclusively used are batch and continuous smokehouses. Figures 9.5.2-1 and 9.5.2-2 show typical batch and continuous smokehouses, respectively. Both types of systems circulate air at the desired process conditions (temperature, humidity, and smoke density) over the surface of the meat. In batch smokehouses, the meat is placed on stationary racks for the entire smoking process. In continuous smokehouses, the meat is hung on sticks or hangers and then conveyed through the various zones (smoking, heating, and chilling) within the smokehouse. Following processing in the smokehouse, the product is packaged and stored for shipment.

Several methods are used to produce the smoke used in smokehouses. The most common method is to pyrolyze hardwood chips or sawdust using smoke generators. In a typical smoke generator, hardwood chips or sawdust are fed onto a gas- or electrically-heated metal surface at 350° to 400°C (662° to 752°F). Smoke is then ducted by a smoke tube into the air recirculation system in the smokehouse. Smoke produced by this process is called natural smoke.

Liquid smoke (or artificial smoke), which is a washed and concentrated natural smoke, is also used in smokehouses. This type of smoke (as a fine aerosol) can be introduced into a smokehouse through the air recirculation system, can be mixed or injected into the meat, or can be applied by drenching, spraying, or dipping.

9.5.2.2 Emissions And Controls[1-2,4]

Particulate matter (PM), carbon monoxide (CO), volatile organic compounds (VOC), polycyclic aromatic hydrocarbons (PAH), organic acids, acrolein, acetaldehyde, formaldehyde, and nitrogen oxides have been identified as pollutants associated with meat smokehouses. The primary source of these pollutants is the smoke used in the smokehouses. Studies cited in Reference 1 show that almost all PM from smoke has an aerodynamic diameter of less than 2.0 micrometers (μm). Acetic acid has been identified as the most prevalent organic acid present in smoke, followed by formic, propionic, butyric, and other acids. Also, acetaldehyde concentrations have been shown to be about five times greater than formaldehyde concentrations in smoke. Heating zones in continuous smokehouses (and the cooking cycle in batch smokehouses) are a source of odor that includes small amounts of VOC. The VOC are a result of the volatilization of organic compounds contained in the meat or the smoke previously applied to the meat. Heating zones are typically heated with ambient air that is passed over electrically-heated or steam-heated coils (steam from boilers used elsewhere at the facility). Therefore, heating zones are not a source of combustion products. Factors that may

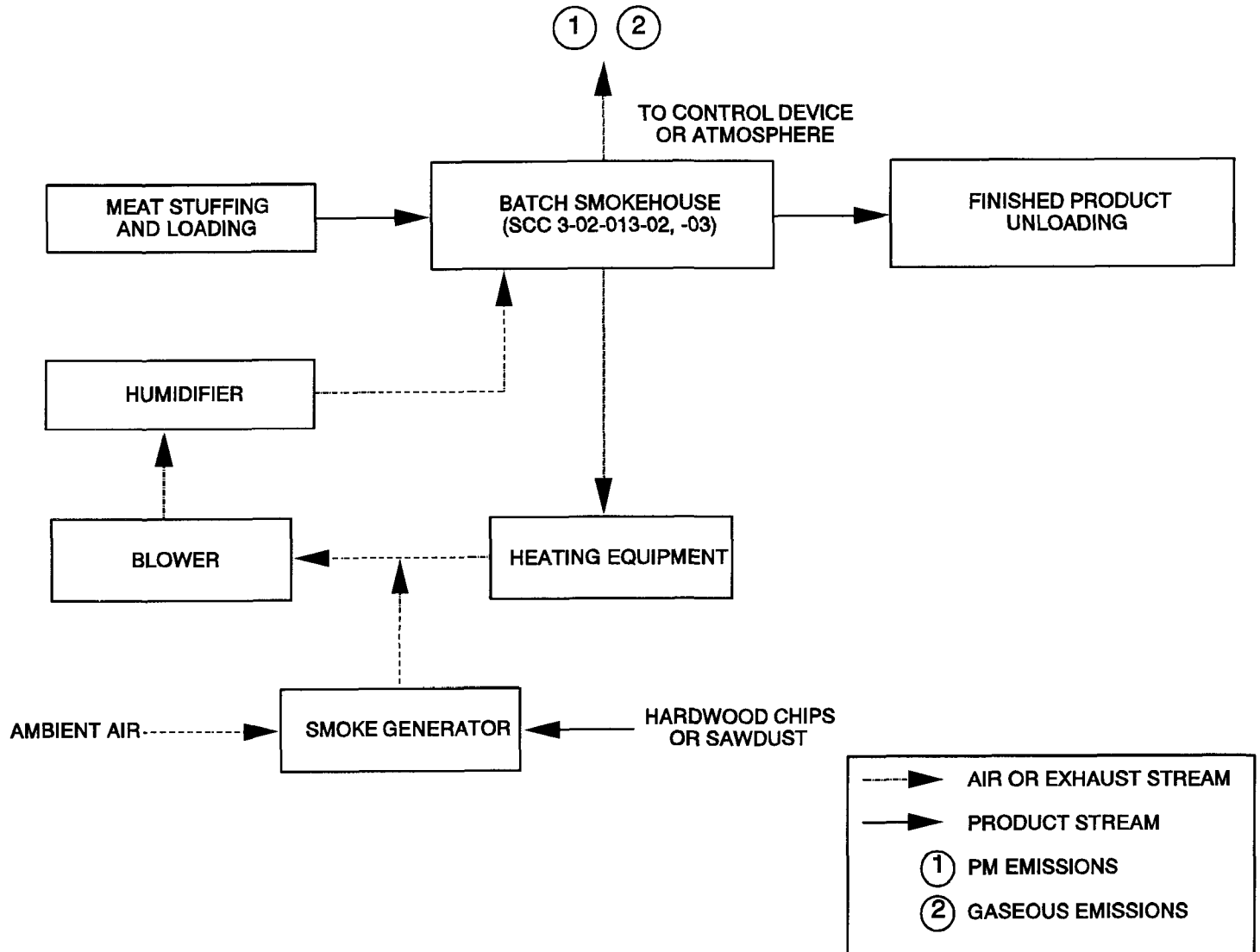

Figure 9.5.2-1. Typical batch smokehouse.[1]
(Source Classification Code in parentheses.)

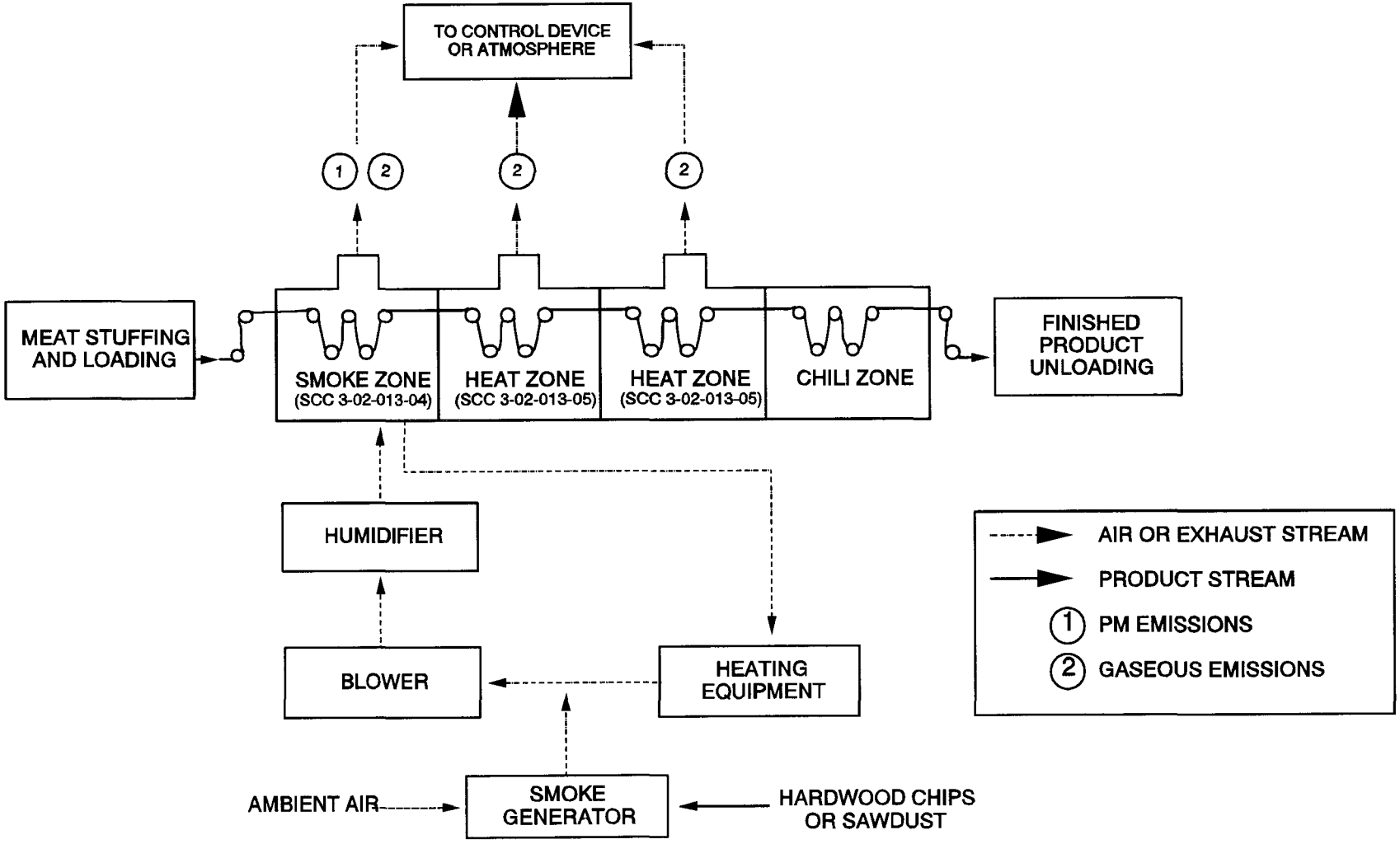

Figure 9.5.2-2. Typical continuous smokehouse.[1]
(Source Classification Code in parentheses.)

effect smokehouse emissions include the amount and type of wood or liquid smoke used, the type of meat processed, the processing time, humidity, and the temperature maintained in the smoke generators.

Control technologies used at meat smokehouses include afterburners, wet scrubbers, and modular electrostatic precipitators (ESP). Emissions can also be reduced by controlling important process parameters. An example of this type of process control is maintaining a temperature not higher than about 400°C (752°F) in the smoke generator, to minimize the formation of PAH.

Afterburners are an effective control technology for PM, organic gases, and CO from smokehouses, but energy requirements may be costly for continuous smokehouse operations. Also, the additional air pollution resulting from afterburner fuel combustion makes afterburners a less desirable option for controlling smokehouse emissions.

Wet scrubbers are another effective control technology for both PM and gaseous emissions. Different types of scrubbers used include mist scrubbers, packed bed scrubbers, and vortex scrubbers. Mist scrubbers introduce a water fog into a chamber, and exhaust gases are then fed into the chamber and are absorbed. Packed bed scrubbers introduce the exhaust gases into a wetted column containing an inert packing material in which liquid/gas contact occurs. Vortex scrubbers use a whirling flow pattern to shear water into droplets, which then contact the exhaust gases. Limited test data (from Reference 4) show a vortex scrubber (followed by a demister) achieving about 51 percent formaldehyde removal, 85 percent total organic compound removal, 39 percent acetic acid removal, and 69 percent PM removal. Particulate matter removal efficiencies for scrubbers can be increased through the use of surfactants, which may enhance the capture of smoke particles that do not combine with the scrubber water.

Elecrostatic precipitators are effective for controlling PM emissions. Combined control technologies, such as a wet scrubber for gaseous emission control followed by an ESP for PM removal, may also be used to control emissions from smokehouses.

Smokehouse control devices are operated during the smoking cycle and are sometimes bypassed during the cooking and cooling cycles. Continuous smokehouses may include separate vents for exhaust streams from the different zones, thus minimizing the air flow through the control device.

The average emission factors for meat smokehouses are shown in Tables 9.5.2-1 and 9.5.2-2. These emission factors are presented in units of mass of pollutant emitted per mass of wood used to generate smoke. Normally, emission factors are based on either units of raw material or units of product. In this industry, the amount of smoke flavor applied to the meats varies; consequently the emissions are dependent on the quantity of wood (or liquid smoke) used, rather than the quantity of meat processed. The emission factors presented in Tables 9.5.2-1 and 9.5.2-2 were developed using data from only two facilities and, consequently, may not be representative of the entire industry.

Table 9.5.2-1. EMISSION FACTORS FOR BATCH AND CONTINUOUS MEAT SMOKEHOUSES[a]

EMISSION FACTOR RATING: D

Process	Filterable PM		Condensible PM			Total PM	
	PM	PM-10	Inorganic	Organic	Total	PM	PM-10
Batch smokehouse, smoking cycle[b] (SCC 3-02-013-02)	23	ND[c]	11	19	30	53	ND[c]
Continuous smokehouse, smoke zone[d] (SCC 3-02-013-04)	66	ND[c]	36	39	75	140	ND[c]
Continuous smokehouse, smoke zone, with vortex wet scrubber and demister[d] (SCC 3-02-013-04)	13	ND[c]	9.8	6.0	16	29	ND[c]

[a] Emission factor units are lb/ton of wood or sawdust used. ND = no data available. SCC = Source Classification Code.
[b] Reference 5.
[c] Although data are not directly available, Reference 1 states that all PM from smoke is less than 2 micrometers in aerodynamic diameter.
[d] References 4-6.

Table 9.5.2-2. EMISSION FACTORS FOR BATCH AND CONTINUOUS MEAT SMOKEHOUSES[a]

Process	VOC	EMISSION FACTOR RATING	Formaldehyde	EMISSION FACTOR RATING	Acetic Acid	EMISSION FACTOR RATING
Batch smokehouse, smoking cycle[b] (SCC 3-02-013-02)	44	D	ND	NA	ND	NA
Batch smokehouse, cooking cycle (SCC 3-02-013-03)	ND	NA	ND	NA	ND	NA
Continuous smokehouse, smoke zone[c] (SCC 3-02-013-04)	17	D	1.3	E	4.5	E
Continuous smokehouse, smoke zone, with vortex wet scrubber and demister[d] (SCC 3-02-013-04)	4.4	E	0.62	E	2.8	E
Continuous smokehouse, heat zone (SCC 3-02-013-05)	ND	NA	ND	NA	ND	NA

[a] Emission factor units are lb/ton of wood or sawdust used, unless noted. ND = no data available. NA = not applicable. SCC = Source Classification Code.
[b] Reference 5. VOC, measured as methane.
[c] References 5-6. VOC, measured as methane.
[d] Reference 4. VOC, measured as methane. VOCs were measured on a gas chromatograph calibrated against acetaldehyde, and the results were converted to a methane basis.

References For Section 9.5.2

1. J. R. Blandford, "Meat Smokehouses", in Chapter 13, Food And Agriculture Industry, *Air Pollution Engineering Manual*, Van Nostrand Reinhold Press, 1992.

2. Written communication from J. M. Jaeckels, Oscar Mayer Foods Corporation, Madison, WI, to S. Lindem, Wisconsin Department of Natural Resources, Madison, WI, April 1, 1992.

3. Joseph A. Maga, *Smoke In Food Processing*, CRC Press, Incorporated, Boca Raton, FL, 1988.

4. *KSI-2 & KSI-3 Continuous Smokehouses Stack Emissions Testing*, Hillshire Farm & Kahn's, New London, WI, September 19-20, 1991.

5. *Report On Diagnostic Testing*, Oscar Mayer Foods Corporation, Madison, WI, January 13, 1994.

6. Written correspondence from D. Sellers, Wisconsin Department of Natural Resources, Madison, WI, to Wisconsin Department of Natural Resources Files, Madison, WI, June 17, 1994.

7. Written communication from J. M. Jaeckels, BT^2, Inc., Madison, WI, to D. Safriet, U. S. Environmental Protection Agency, Research Triangle Park, NC, December 15, 1994.

8. Telephone communication between B. L. Shrager, Midwest Research Institute, Cary, NC, and J.M. Jaeckels, BT^2, Inc., Madison, WI, March 16 and 17, 1995.

9. Emission Factor Documentation, AP-42 Section 9.5.2, Meat Smokehouses, EPA Contract No. 68-D2-0159, Midwest Research Institute, Cary, NC, September 1995.

9.5.3 Meat Rendering Plants

9.5.3.1 General[1]

Meat rendering plants process animal by-product materials for the production of tallow, grease, and high-protein meat and bone meal. Plants that operate in conjunction with animal slaughterhouses or poultry processing plants are called integrated rendering plants. Plants that collect their raw materials from a variety of offsite sources are called independent rendering plants. Independent plants obtain animal by-product materials, including grease, blood, feathers, offal, and entire animal carcasses, from the following sources: butcher shops, supermarkets, restaurants, fast-food chains, poultry processors, slaughterhouses, farms, ranches, feedlots, and animal shelters.

The two types of animal rendering processes are edible and inedible rendering. Edible rendering plants process fatty animal tissue into edible fats and proteins. The plants are normally operated in conjunction with meat packing plants under U. S. Department of Agriculture, Food Safety and Inspection Services (USDA/FSIS) inspection and processing standards. Inedible rendering plants are operated by independent renderers or are part of integrated rendering operations. These plants produce inedible tallow and grease, which are used in livestock and poultry feed, soap, and production of fatty-acids.

9.5.3.2 Process Description[1-3]

Raw Materials —

Integrated rendering plants normally process only one type of raw material, whereas independent rendering plants often handle several raw materials that require either multiple rendering systems or significant modifications in the operating conditions for a single system.

Edible Rendering —

A typical edible rendering process is shown in Figure 9.5.3-1. Fat trimmings, usually consisting of 14 to 16 percent fat, 60 to 64 percent moisture, and 22 to 24 percent protein, are ground and then belt conveyed to a melt tank. The melt tank heats the materials to about 43°C (110°F), and the melted fatty tissue is pumped to a disintegrator, which ruptures the fat cells. The proteinaceous solids are separated from the melted fat and water by a centrifuge. The melted fat and water are then heated with steam to about 93°C (200°F) by a shell and tube heat exchanger. A second-stage centrifuge then separates the edible fat from the water, which also contains any remaining protein fines. The water is discharged as sludge, and the "polished" fat is pumped to storage. Throughout the process, direct heat contact with the edible fat is minimal and no cooking vapors are emitted. For this reason, no emission points are designated in Figure 9.5.3-1.

Inedible Rendering —

There are two processes for inedible rendering: the wet process and the dry process. Wet rendering is a process that separates fat from raw material by boiling in water. The process involves addition of water to the raw material and the use of live steam to cook the raw material and accomplish separation of the fat. Dry rendering is a batch or continuous process that dehydrates raw material in order to release fat. Following dehydration in batch or continuous cookers, the melted fat and protein solids are separated. At present, only dry rendering is used in the United States. The wet rendering process is no longer used because of the high cost of energy and of an adverse effect

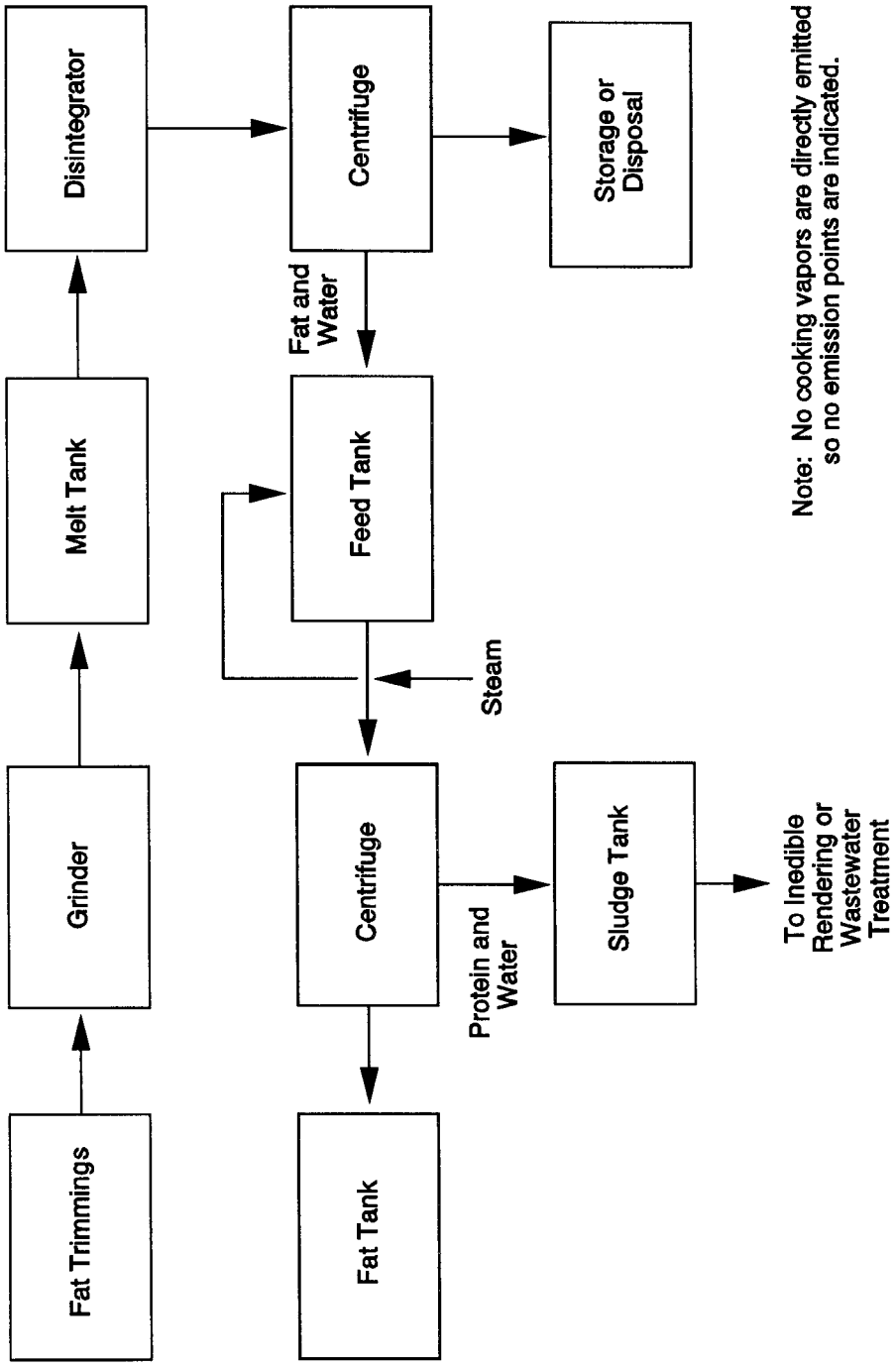

Figure 9.5.3-1. Edible rendering process.

on the fat quality. Table 9.5.3-1 shows the fat, protein, and moisture contents for several raw materials processed by inedible rendering plants.

Batch Rendering Process —

In the batch process, the raw material from the receiving bin is screw conveyed to a crusher where it is reduced to 2.5 to 5 centimeters (cm) (1 to 2 inches [in.]) in size to improve cooking efficiency. Cooking normally requires 1.5 to 2.5 hr, but adjustments in the cooking time and temperature may be required to process the various materials. A typical batch cooker is a horizontal, cylindrical vessel equipped with a steam jacket and an agitator. To begin the cooking process the cooker is charged with raw material, and the material is heated to a final temperature ranging from 121° to 135°C (250° to 275°F). Following the cooking cycle, the contents are discharged to the percolator drain pan. Vapor emissions from the cooker pass through a condenser where the water vapor is condensed and noncondensibles are emitted as VOC emissions.

The percolator drain pan contains a screen that separates the liquid fat from the protein solids. From the percolator drain pan, the protein solids, which still contain about 25 percent fat, are conveyed to the screw press. The screw press completes the separation of fat from solids, and yields protein solids that have a residual fat content of about 10 percent. These solids, called cracklings, are then ground and screened to produce protein meal. The fat from both the screw press and the percolator drain pan is pumped to the crude animal fat tank, centrifuged or filtered to remove any remaining protein solids, and stored in the animal fat storage tank.

Continuous Rendering Process —

Since the 1960, continuous rendering systems have been installed to replace batch systems at some plants. Figure 9.5.3-2 shows the basic inedible rendering process using the continuous process. The system is similar to a batch system except that a single, continuous cooker is used rather than several parallel batch cookers. A typical continuous cooker is a horizontal, steam-jacketed cylindrical vessel equipped with a mechanism that continuously moves the material horizontally through the cooker. Continuous cookers cook the material faster than batch cookers, and typically produce a higher quality fat product. From the cooker, the material is discharged to the drainer, which serves the same function as the percolator drain pan in the batch process. The remaining operations are generally the same as the batch process operations.

Current continuous systems may employ evaporators operated under vacuum to remove moisture from liquid fat obtained using a preheater and a press. In this system, liquid fat is obtained by precooking and pressing raw material and then dewatered using a heated evaporator under vacuum. The heat source for the evaporator is hot vapors from the cooker/dryer. The dewatered fat is then recombined with the solids from the press prior to entry into the cooker/dryer.

Blood Processing And Drying —

Whole blood from animal slaughterhouses, containing 16 to 18 percent total protein solids, is processed and dried to recover protein as blood meal. At the present time, less than 10 percent of the independent rendering plants in the U. S. process whole animal blood. The blood meal is a valuable ingredient in animal feed because it has a high lysine content. Continuous cookers have replaced batch cookers that were originally used in the industry because of the improved energy efficiency and product quality provided by continuous cookers. In the continuous process, whole blood is introduced into a steam-injected, inclined tubular vessel in which the blood solids coagulate. The coagulated blood solids and liquid (serum water) are then separated in a centrifuge, and the blood solids dried in either a continuous gas-fired, direct-contact ring dryer or a steam tube, rotary dryer.

Table 9.5.3-1. COMPOSITION OF RAW MATERIALS FOR INEDIBLE RENDERING[a]

Source	Tallow/Grease, wt %	Protein Solids, wt %	Moisture, wt %
Packing house offal[b] and bone			
Steers	30-35	15-20	45-55
Cows	10-20	20-30	50-70
Calves	10-15	15-20	65-75
Sheep	25-30	20-25	45-55
Hogs	25-30	10-15	55-65
Poultry offal	10	25	65
Poultry feathers	None	33	67
Dead stock (whole animals)			
Cattle	12	25	63
Calves	10	22	68
Sheep	22	25	53
Hogs	30	28	42
Butcher shop fat and bone	31	32	37
Blood	None	16-18	82-84
Restaurant grease	65	10	25

[a] Reference 1.
[b] Waste parts; especially the entrails and similar parts from a butchered animal.

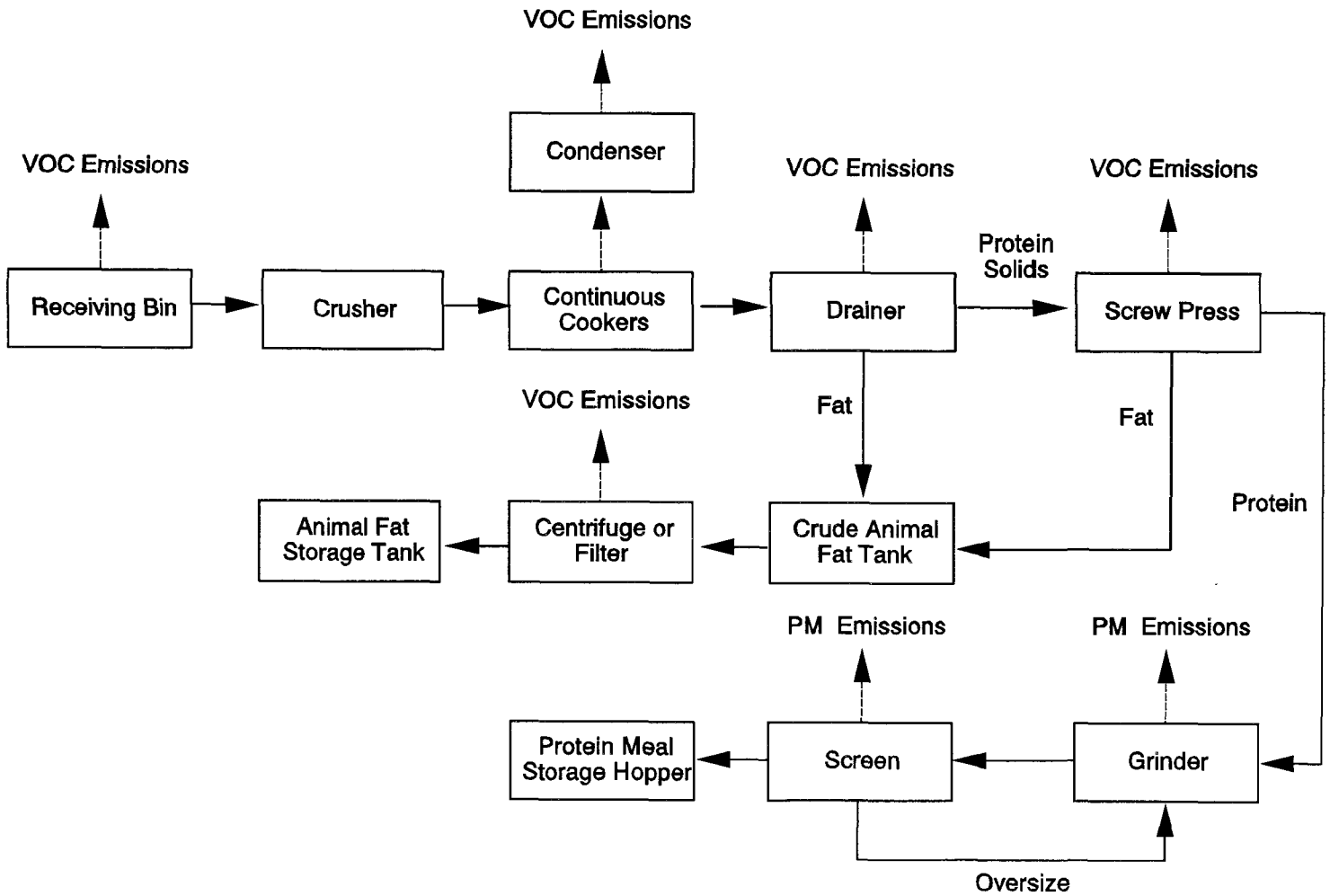

Figure 9.5.3-2. Continuous rendering process.

Poultry Feathers And Hog Hair Processing —

The raw material is introduced into a batch cooker, and is processed for 30 to 45 minutes at temperatures ranging from 138° to 149°C (280° to 300°F) and pressures ranging from (40 to 50 psig). This process converts keratin, the principal component of feathers and hog hair, into amino acids. The moist meal product, containing the amino acids, is passed either through a hot air, ring-type dryer or over steam-heated tubes to remove the moisture from the meal. If the hot air dryer is used, the dried product is separated from the exhaust by cyclone collectors. In the steam-heated tube system, fresh air is passed countercurrent to the flow of the meal to remove the moisture. The dried meal is transferred to storage. The exhaust gases are passed through controls prior to discharge to the atmosphere.

Grease Processing —

Grease from restaurants is recycled as another raw feed material processed by rendering plants. The grease is bulk loaded into vehicles, transported to the rendering plant, and discharged directly to the grease processing system. During processing, the melted grease is first screened to remove coarse solids, and then heated to about 93°C (200°F) in vertical processing tanks. The material is then stored in the processing tank for 36 to 48 hr to allow for gravity separation of the grease, water, and fine solids. Separation normally results in four phases: (1) solids, (2) water, (3) emulsion layer, and (4) grease product. The solids settle to the bottom and are separated from the water layer above. The emulsion is then processed through a centrifuge to remove solids and another centrifuge to remove water and any remaining fines; the grease product is skimmed off the top.

9.5.3.3 Emissions And Controls[1-5]

Emissions —

Volatile organic compounds (VOCs) are the primary air pollutants emitted from rendering operations. The major constituents that have been qualitatively identified as potential emissions include organic sulfides, disulfides, C-4 to C-7 aldehydes, trimethylamine, C-4 amines, quinoline, dimethyl pyrazine, other pyrazines, and C-3 to C-6 organic acids. In addition, lesser amounts of C-4 to C-7 alcohols, ketones, aliphatic hydrocarbons, and aromatic compounds are potentially emitted. No quantitative emission data were presented. Historically, the VOCs are considered an odor nuisance in residential areas in close proximity to rendering plants, and emission controls are directed toward odor elimination. The odor detection threshold for many of these compounds is low; some as low as 1 part per billion (ppb). Of the specific constituents listed, only quinoline is classified as a hazardous air pollutant (HAP). In addition to emissions from rendering operations, VOCs may be emitted from the boilers used to generate steam for the operation.

Emissions from the edible rendering process are not considered to be significant because no cooking vapors are emitted and direct heat contact with the edible fat is minimal. Therefore, these emissions are not discussed further.

For inedible rendering operations, the primary sources of VOC emissions are the cookers and the screw press. Other sources of VOC emissions include blood and feather processing operations, dryers, centrifuges, tallow processing tanks, and percolator pans that are not enclosed. Raw material may also be a source of VOC emissions, but if the material is processed in a timely manner, these emissions are minimal.

In addition to VOC emissions, particulate matter (PM) is emitted from grinding and screening of the solids (cracklings) from the screw press and other rendering operations such as dryers processing blood and feathers. No emission data quantifying VOC, HAP, or PM emissions from the

rendering process are available for use in developing emission factors. Only test data for a blood dryer operation were identified.

Controls —

Emissions control at rendering plants is based primarily on the elimination of odor. These controls are divided into two categories: (1) those controlling high intensity odor emissions from the rendering process, and (2) those controlling plant ventilating air emissions. The control technologies that are typically used for high intensity odors from rendering plant process emissions are waste heat boilers (incinerators) and multistage wet scrubbers.

Boiler incinerators are a common control technology because boilers can be used not only as control devices but also to generate steam for cooking and drying operations. In waste heat boilers, the waste stream can be introduced into the boiler as primary or secondary combustion air. Primary combustion air is mixed with fuel before ignition to allow for complete combustion, and secondary combustion air is mixed with the burner flame to complete combustion. Gaseous waste streams that contain noncondensibles are typically "cleaned" in a combination scrubber and entrainment separator before use as combustion air.

Multistage wet scrubbers are equally as effective as incineration for high intensity odor control and are used to about the same extent as incinerators. Sodium hypochlorite is considered to be the most effective scrubbing agent for odor removal, although other oxidants can be used. Recently, chlorine dioxide has been used as an effective scrubbing agent. Venturi scrubbers are often used to remove PM from waste streams before treatment by the multistage wet scrubbers. Plants that are located near residential or commercial areas may treat process and fugitive emissions by ducting the plant ventilation air through a single-stage wet scrubbing system to minimize odorous emissions.

In addition to the conventional scrubber control technology, activated carbon adsorption and catalytic oxidation potentially could be used to control odor; however, no rendering plants currently use these technologies. Recently, some plants have installed biofilters to control emissions.

No data are currently available for VOC or particulate emissions from rendering plants. The only available data are for emissions from blood dryers, which is an auxiliary process in meat rendering operations. Less than 10 percent of the independent rendering plants in the U. S. process whole blood. Table 9.5.3-2 provides controlled emission factors in English units for particulate matter (filterable and condensible), hydrogen sulfide, and ammonia from natural gas, direct-fired blood dryers. The filterable PM was found to be 100 percent PM-10. Emission factors are calculated on the basis of the weight of dried blood meal product. In addition to natural gas, direct-fired dryers, steam-coil, indirect blood dryers (SCC 3-02-038-12) are also used in meat rendering plants. No emission data were found for this type of dryer. The emission control system in Reference 4 consisted of a cyclone separator for collection of the blood meal product followed by a venturi wet scrubber and three packed bed scrubbers in series. The scrubbing medium for the three packed bed scrubbers was a sodium hypochlorite solution. The emission control system in Reference 5 was a mechanical centrifugal separator.

Table 9.5.3-2. EMISSION FACTORS FOR CONTROLLED BLOOD DRYERS

EMISSION FACTOR RATING: E

Pollutant	Emissions, lb/ton[a]
Filterable PM-10[b] (SCC 3-02-038-11)	0.76
Condensible PM[b] (SCC 3-02-038-11)	0.46
Hydrogen sulfide[c] (SCC 3-02-038-11)	0.08
Ammonia[c] (SCC 3-02-038-11)	0.60

[a] Emission factors based on weight of dried blood meal product. Emissions are for natural gas, direct-fired dryers.
[b] References 4-5.
[c] Reference 4.

References For Section 9.5.3

1. W.H. Prokop, Section on rendering plants, in Chapter 13, "Food And Agriculture Industry", *Air Pollution Engineering Manual*, Van Nostrand Reinhold Press, 1992.

2. H.J. Rafson, *Odor Emission Control For The Food Industry*, Food And Technology, June 1977.

3. *Emission Factor Documentation for AP-42 Section 9.5.3, Meat Rendering Plants*, EPA Contract No. 68-D2-0159, Midwest Research Institute , Kansas City, MO, September 1995.

4. *Blood Dryer Operation Stack Emissions Testing*, Environmental Technology and Engineering Corporation, Elm Grove, WI, September 1989.

5. *Blood Dryer Particulate Emission Compliance Test*, Interpoll Report No. 7-2325, Interpoll Laboratories, Inc., Circle Pines, MN, January 1987.

9.5.4 Manure Processing

[Work In Progress]

9.5.5 Poultry Slaughtering

[Work In Progress]

9.6 Dairy Products

[Work In Progress]

9.6.1 Natural And Processed Cheese

[Work In Progress]

9.7 Cotton Ginning

9.7.1 General[1-8]

Cotton ginning takes place throughout the area of the United States known as the Sunbelt. Four main production regions can be designated:

- Southeast—Virginia, North Carolina, South Carolina, Georgia, Alabama, and Florida
- Mid-South—Missouri, Tennessee, Mississippi, Arkansas, and Louisiana
- Southwest—Texas and Oklahoma
- West—New Mexico, Arizona, and California

The majority of the ginning facilities are located in Texas, Mississippi, Arkansas, California, and Louisiana.

The industry trend is toward fewer gins with higher processing capacity. In 1979, 2,332 active gins in the United States produced 14,161,000 bales of cotton. By the 1994/1995 season, the number of cotton gins in the United States dropped to 1,306, but about 19,122,000 bales were produced. The average volume processed per gin in 1994/1995 was 14,642 bales.

Cotton ginning is seasonal. It begins with the maturing of the cotton crop, which varies by region, and ends when the crop is finished. Each year the cotton ginning season starts in the lower Southwest region in midsummer, continues through the south central and other geographical regions in late summer and early autumn, and ends in the upper Southwest region in late autumn and early winter. Overall, U. S. cotton is ginned between October 1 and December 31, with the bulk of the crop from each geographical region being ginned in 6 to 8 weeks. During the remainder of the year, the gin is idle.

All U. S. cotton in commercial production is now harvested by machines of two types, picking and stripping. Machine-picked cotton accounts normally for 70 to 80 percent of the total cotton harvested, while the rest is machine stripped. Machine picking differs from machine stripping mainly in the method by which the cotton lint and seed are removed from the plant. Machine picking is done by a spindle picker machine that selectively separates the exposed seed cotton from the open capsules, or bolls. In contrast, the mechanical stripper removes the entire capsule, with lint plus bract, leaf, and stem components in the harvested material.

Strippers collect up to six times more leaves, burs, sticks, and trash than the spindle picker machines. This higher ratio of trash to lint requires additional equipment for cleaning and trash extraction. Stripper-harvested cotton may produce 1,000 pounds of trash per 500-pound bale of lint, compared to 150 pounds of trash per 500-pound bale from spindle picking.

The modular system of seed cotton storage and handling has been rapidly adopted. This system stores seed cotton in the field after harvesting until the gin is ready to process it. Modules can also be transported longer distances, allowing gins to increase productivity. In 1994, 78 percent of the U.S. crop was handled in modules.

9.7.2 Process Description[2,5-7]

Figure 9.7-1 is a flow diagram of a typical cotton-ginning process. Each of the five ginning steps and associated equipment is described below.

9.7.2.1 Unloading System -

Module trucks and trailers transport cotton from the field to the gin. A pneumatic system removes the cotton from the trailers, and either a pneumatic system or a module feeder removes the cotton from modules. A combination conveyer and pneumatic system conveys the cotton to a separator and feed control unit. Prior to this first separator point, some gins use a stone and green boll trap for preliminary trash removal. The screen assembly in the separator allows air to escape but collects the cotton and allows it to fall into the feed control unit. The conveying air flows from the separator to a cyclone system, where it is cleaned and discharged to the atmosphere.

9.7.2.2 Seed Cotton Cleaning System -

Cotton is subjected to three basic conditioning processes--drying, cleaning, and extracting--before it is processed for separation of lint and seed. To ensure adequate conditioning, cotton gins typically use two conditioning systems (drying, cleaning, and extracting) in series.

Seed cotton dryers are designed to reduce lint cotton moisture content to 5 to 8 percent to facilitate cleaning and fiber/seed separation. A high-pressure fan conveys seed cotton through the drying system to the first seed cotton cleaner, which loosens the cotton and removes fine particles of foreign matter (e. g., leaf trash, sand, and dirt). In the second cleaner, large pieces (e. g., sticks, stems, and burs) are removed from the cotton by a different process, referred to as "extracting". Different types of extractors may be used, including bur machines, stick machines, stick and bur machines, stick and green leaf extractors, and extractor/feeders. These machines remove burs, sticks, stems, and large leaves, pneumatically conveying them to the trash storage area. The cotton is pneumatically conveyed to the next processing step. Typically, all conveying air is cleaned by a cyclone before being released to the atmosphere.

9.7.2.3 Overflow System -

After cleaning, the cotton enters a screw conveyor distributor, which apportions the cotton to the extractor/feeders at a controlled rate. The extractor/feeders drop the cotton into the gin stands at the recommended processing rates. If the flow of cotton exceeds the limit of the extractor/feeder systems, the excess cotton flows into the overflow hopper. A pneumatic system (overflow separator) then returns this cotton back to the screw conveyor distributor, as required. Typically, the air from this system is routed through a cyclone and cleaned before being exhausted to the atmosphere.

9.7.2.4 Ginning and Lint Handling System -

Cotton enters the gin stand through a "huller front", which performs some cleaning. Saws grasp the locks of cotton and draw them through a widely spaced set of "huller ribs" that strip off hulls and sticks. (New gin stands do not have huller ribs.) The cotton locks are then drawn into the roll box, where fibers are separated from the seeds. After all the fibers are removed, the seeds slide down the face of the ginning ribs and fall to the bottom of the gin stand for subsequent removal to storage. Cotton lint is removed from the saws by a rotating brush, or a blast of air, and is conveyed pneumatically to the lint cleaning system for final cleaning and combing. The lint cotton is removed from the conveying airstream by a condenser that forms the lint into a batt. The lint batt is fed into the first lint cleaner, where saws comb the lint cotton again and remove part of the remaining leaf particles, grass, and motes. Most condensers are covered with fine mesh wire or fine perforated metal, which acts to filter short lint fibers and some dust from the conveying air.

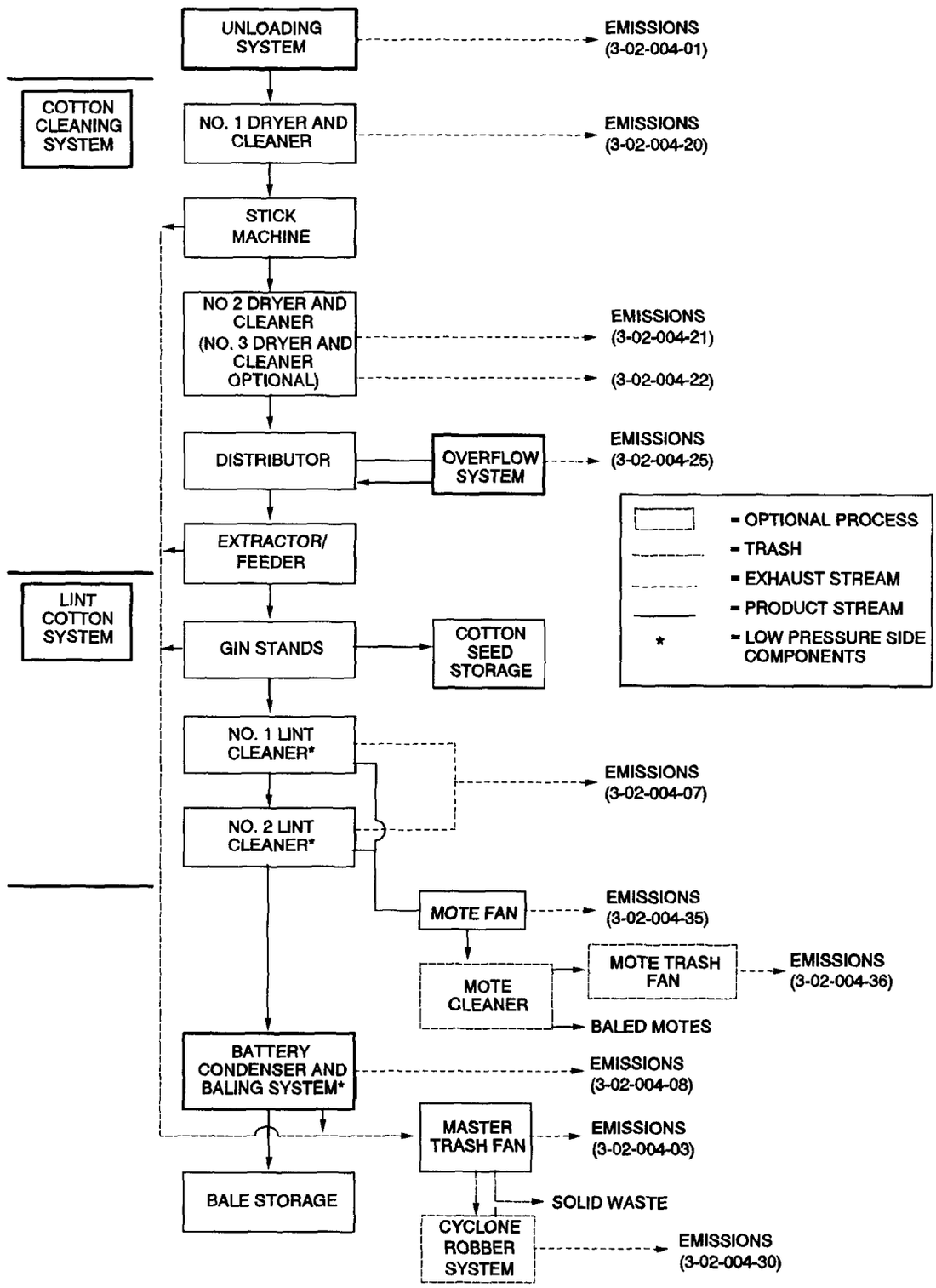

Figure 9.7-1. Flow diagram of cotton ginning process.
(Source Classification Codes in parentheses.)

9.7.2.5 Battery Condenser And Baling System -

Lint cotton is pneumatically transported from the lint cleaning system to a battery condenser, which is a drum covered with fine mesh screen or fine perforated metal that separates the lint cotton from the conveying air. The lint cotton is formed into batts and fed into a baling press, which compresses the cotton into uniform bales.

Most gins use a double-press box for packaging the cotton into bales. The lint drops into one press box and fills it while a bale is being pressed and strapped in the other box. Approximately 480 lb (217 kilograms [kg]) of cotton is pressed into a bale before it is wrapped with a cover and strapped. Modern gins are presently equipped with higher-tonnage bale presses that produce the more compact universal density cotton bales. In 1995, 96 percent of the U.S. crop was pressed into universal density bales at the gins. The finished cotton bale is transported to the textile mill for processing into yarn. Motes are sometimes cleaned and baled also.

9.7.3 Emissions And Controls[1-24]

Particulate matter (PM) is the primary air pollutant emitted from cotton ginning. Available data indicate that about 37 percent of the total PM emitted (following control systems) from cotton ginning is PM less than or equal to 10 microns in aerodynamic diameter (PM-10). The PM is composed of fly lint, dust, fine leaves, and other trash. Figure 9.7-1 shows the typical PM emission points in the ginning process. Particulate matter emissions are typically greater at gins processing stripper-harvested cotton than at gins processing picker-harvested cotton. Also, PM emissions from the first cotton harvest at a given facility are typically lower than emissions from subsequent harvests.

Control devices used to control PM emissions from cotton ginning operations include cyclones, fine screen coverings, and perforated metal drums. Cyclones may be used to control the sources with high pressure exhaust or all of the operations at a gin. Two types of cyclones that are used are 2D-2D and 1D-3D cyclones. Both the body and the cone of a 2D-2D cyclone are twice as long as the cyclone diameter. The body of a 1D-3D cyclone is the same length as the diameter, and the cone length is three times the diameter. In many cases, 1D-3D cyclones display slightly higher PM control efficiencies than 2D-2D cyclones.

Screen coverings and perforated drums may be used to control PM emissions from sources with low-pressure exhaust, including the battery condenser and lint cleaners.

Table 9.7-1 presents PM and PM-10 emission factors for cotton gins controlled primarily by 1D-3D or 2D-2D cyclones. Emission factors for lint cleaners and battery condensers with screened drums or cages are also presented. Emission factors for total gin emissions are shown for two different gin configurations. The emission factors for "Total No.1" represent total PM and PM-10 emissions from gins with all exhaust streams controlled by high-efficiency cyclones. The emission factors for "Total No. 2" represent total PM and PM-10 emissions from gins with screened drums or cages controlling the lint cleaner and battery condenser exhausts and high-efficiency cyclones controlling all other exhaust streams. The emission factors for the No. 3 dryer and cleaner, cyclone robber system, and mote trash fan are not included in either total because these processes are not used at most cotton gins. However, these factors should be added into the total for a particular gin if these processes are used at that gin.

Table 9.7-1. EMISSION FACTORS FOR COTTON GINS CONTROLLED WITH HIGH-EFFICIENCY CYCLONES[a]

Source	Total PM, lb/bale	EMISSION FACTOR RATING	PM-10, lb/bale	EMISSION FACTOR RATING
Unloading fan (SCC 3-02-004-01)	0.29[b]	D	0.12[c]	D
No. 1 dryer and cleaner (SCC 3-02-004-20)	0.36[d]	D	0.12[e]	D
No. 2 dryer and cleaner (SCC 3-02-004-21)	0.24[f]	D	0.093[g]	D
No. 3 dryer and cleaner[h] (SCC 3-02-004-22)	0.095	D	0.033	D
Overflow fan[j] (SCC 3-02-004-25)	0.071	D	0.026	D
Lint cleaners (SCC 3-02-004-07)				
with high-efficiency cyclones[k]	0.58	D	0.24	D
with screened drums or cages[m]	1.1	E	ND	NA
Cyclone robber system[n] (SCC 3-02-004-30)	0.18	D	0.052	D
Mote fan (SCC 3-02-004-35)	0.28[p]	D	0.13[q]	D
Mote trash fan[r] (SCC 3-02-004-36)	0.077	D	0.021	D
Battery condenser (SCC 3-02-004-08)				
with high-efficiency cyclones[s]	0.039	D	0.014	D
with screened drums or cages[m]	0.17	E	ND	NA
Master trash fan (SCC 3-02-004-03)	0.54[t]	D	0.074[u]	D
Cotton gin total No. 1[v] (SCC 3-02-004-10)	2.4	D	0.82	D
Cotton gin total No. 2[w] (SCC 3-02-004-10)	3.1	E	1.2	E

[a] Emission factor units are lb of pollutant per bale of cotton processed. Emissions are controlled by 1D-3D or 2D-2D high-efficiency cyclones unless noted. SCC = source classification code. ND = no data available. To convert from lb/bale to kg/bale, multiply by 0.45.
[b] References 13-15,17,19-20,22,24.
[c] References 13-14,17,22,24.
[d] References 12-14,17,19,21.
[e] References 12-14,17,21.
[f] References 9,12,14,17,19,24.
[g] References 9,12,14,17,24.
[h] References 10,16. Most gins do not include this source, and these emission factors are not included in the total gin emission factors shown. However, these factors should be added into the total for a particular gin if this source is part of that gin.
[j] References 10,14,17,24.
[k] References 13-14,17,21-23. Emission factors are included in Total No. 1, but are not included in Total No. 2.
[m] References 18-20. Emission factors are not included in Total No. 1, but are included in Total No. 2.
[n] Reference 22. Most gins do not include this source, and these emission factors are not included in the total gin emission factors shown. However, these factors should be added into the total for a particular gin if this source is part of that gin.
[p] References 11-14,17,19-20,23-24.
[q] References 11-14,17,24.
[r] References 10-11,22. Many gins do not include this source, and these emission factors are not included in the total gin emission factors shown. However, these factors should be added into the total for a particular gin if these sources are part of that gin.
[s] References 14,16-17,23-24. Emission factors are included in Total No. 1, but are not included in Total No. 2.
[t] References 15,19,22.

[u] References 15,22.
[v] Total for gins with high-efficiency cyclones on all exhaust streams. Does not include emission factors for the No. 3 dryer and cleaner, cyclone robber system, mote trash fan, lint cleaners with screened drums or cages, and battery condenser with screened drums or cages.
[w] Total for gins with screened drums or cages on the lint cleaners and battery condenser and high-efficiency cyclones on all other exhaust streams. Does not include emission factors for the No. 3 dryer and cleaner, cyclone robber system, mote trash fan, lint cleaners with high-efficiency cyclones, and battery condenser with high-efficiency cyclones. PM-10 emissions from lint cleaners and battery condensers with screened drums or cages are estimated as 50 percent of the total PM emissions from these sources.

9.7.4 Summary of Terminology

Bale — A compressed and bound package of cotton lint, typically weighing about 480 lb.

Batt — Matted lint cotton.

Boll — The capsule or pod of the cotton plant.

Bur (or burr) — The rough casing of the boll. Often referred to as hulls after separation from the cotton.

Condenser — A perforated or screened drum device designed to collect lint cotton from the conveying airstream, at times into a batt.

Cotton — General term used variously to refer to the cotton plant (genus *Gossypium*); agricultural crop; harvest product; white fibers (lint) ginned (separated) from the seed; baled produce; and yarn or fabric products. Cotton is classified as upland or extra long staple depending on fiber length.

Cottonseed — The seed of the cotton plant, separated from its fibers. The seeds constitute 40 percent to 55 percent of the seed cotton (depending on the amount of trash) and are processed into oil meal, linters, and hulls, or are fed directly to cattle.

Cyclone — A centrifugal air pollution control device for separating solid particles from an airstream.

Cyclone robber system - A secondary cyclone trash handling system. These systems are not used at most cotton gins.

Cylinder cleaner — A machine with rotating spiked drums that open the locks and clean the cotton by removing dirt and small trash.

Extractor — Equipment for removing large trash pieces (sticks, stems, burs, and leaves). The equipment may include one or more devices, including a stick machine, bur machine, green-leaf machine, and a combination machine.

Extractor-feeder — A device that gives seed cotton a final light extraction/cleaning and then feeds it at a controlled rate to the gin stand.

Fly lint (or lint fly) — Short (less than 50 μm) cotton fibers, usually emitted from condensers and mote fan.

Gin stand — The heart of the ginning plant where gin saws (usually several in parallel) separate the cotton lint from the seeds.

High pressure side — The portion of the process preceding the gin stand (including unloading, drying, extracting, cleaning, and overflow handling systems) in which material is conveyed by a higher pressure air, and exhausts are typically controlled by cyclones.

Lint cleaner — A machine for removing foreign material from lint cotton.

Lint cotton — Cotton fibers from which the trash and seeds have been removed by the gin.

Low pressure side — The portion of the process following the gin stand (including lint cotton cleaning and batt formation process) in which material is conveyed by low pressure air, and exhausts are typically controlled by condensers.

Mote — A small group of short fibers attached to a piece of the seed or to an immature seed. Motes may be cleaned and baled.

Picker harvester — A machine that removes cotton lint and seeds from open bolls with rotating spindles, leaving unopened bolls on the plant. "First pick" cotton is obtained from the initial harvest of the season. It usually contains less trash than "second pick" cotton, obtained later in the harvest season. "Ground cotton" is obtained by picking up between the rows at season's end and has a high trash content.

Seed cotton — Raw cotton, containing lint, seed, and some waste material, as it comes from the field.

Separator — A mechanical device (e.g., wire screen with rotary rake) that separates seed cotton from conveying air.

Stripper harvester — A machine that strips all bolls — opened (mature) and unopened (immature or green) — from the plant; strippers are used on short cotton plants, grown in arid areas of Texas, Oklahoma, and New Mexico. They collect larger amounts of trash (leaves, stems, and sticks) than picker harvesters.

References For Section 9.7

1. *Airborne Particulate Emissions From Cotton Ginning Operations*, A60-5, U. S. Department Of Health, Education And Welfare, Cincinnati, OH, 1960.

2. *Source Assessment: Cotton Gins*, EPA-600/2-78-004a, U. S. Environmental Protection Agency, Cincinnati, OH, January 1978.

3. A. C. Griffin And E. P. Columbus, *Dust In Cotton Gins: An Overview*, U. S. Cotton Ginning Laboratory, Stoneville, MS, 1982.

4. W. J. Roddy, "Controlling Cotton Gin Emissions", *Journal Of The Air Pollution Control Association*, *28*(6):637, June 1978.

5. Written Communication From Phillip J. Wakelyn And Fred Johnson, National Cotton Council Of America, Washington, DC, To David Reisdorph, Midwest Research Institute, Kansas City, MO, December 30, 1992.

6. *Cotton Ginners Handbook,* Agricultural Handbook No. 503, Agricultural Research Service, U. S. Department Of Agriculture, 1977, U.S. Government Printing Office, Stock No. 001-000-03678-5.

7. Written Communication From Fred Johnson And Phillip J. Wakelyn, National Cotton Council Of America, Memphis, TN, To Dallas Safriet, U. S. Environmental Protection Agency, Research Triangle Park, NC, October 31, 1995.

8. *Emission Factor Documentation, AP-42 Section 9.7, Cotton Ginning*, EPA Contract No. 68-D2-0159, Midwest Research Institute, Cary, NC, June 1996.

9. *Westfield Gin--PM10 & Total Particulate Testing--Main Trash Stock Piler Cyclone, #2 Incline Cyclone, Gin Feed Trash Cyclone*, BTC Environmental, Inc., Ventura, CA, November 14-15, 1991.

10. *Airways Gin--PM10 & Total Particulate Testing--Motes Trash Cyclone, #3 Incline Cyclone, Overflow Separator Cyclone*, BTC Environmental, Inc., Ventura, CA, November 21-22, 1991.

11. *Source Emission Testing--Mount Whitney Cotton Gin*, BTC Environmental, Inc., Ventura, CA, November 29-30, 1990.

12. *Source Emission Testing--Stratford Growers*, BTC Environmental, Inc., Ventura, CA, November 27-28, 1990.

13. *Source Emission Testing--County Line Gin*, BTC Environmental, Inc., Ventura, CA, December 3-4, 1990.

14. *County Line Gin--PM10 & Total Particulate Testing--Motes, Suction, Lint Cleaner, Overflow, #1 Drying, Gin Stand Trash, Battery Condenser, And #2 Drying Cyclones*, BTC Environmental, Inc., Ventura, CA, December 8-11, 1991.

15. *Westfield Gin--PM10 & Total Particulate Testing--Trash Cyclone*, BTC Environmental, Inc., Ventura, CA, November 12, 1992.

16. *West Valley Cotton Growers--PM10 & Total Particulate Testing--Battery Condenser And #3 Dryer/Cleaner Cyclones*, BTC Environmental, Inc., Ventura, CA, October 28, 1993.

17. *Dos Palos Cooperative--PM10 & Total Particulate Testing--Motes, Suction, Lint Cleaner, Overflow, #1 Drying, Battery Condenser, And #2 Drying Cyclones*, BTC Environmental, Inc., Ventura, CA, November 27-29, 1992.

18. *Halls Gin Company--Particulate Emissions From Cotton Gin Exhausts*, State Of Tennessee Department Of Health And Environment Division Of Air Pollution Control, Nashville, TN, October 25-27, 1988.

19. *Cotton Gin Emission Tests, Marana Gin, Producers Cotton Oil Company, Marana, Arizona*, EPA-330/2-78-008, National Enforcement Investigations Center, Denver, CO, And EPA Region IX, San Francisco, CA, May 1978.

20. *Emission Test Report, Westside Farmers' Cooperative Gin #5, Tranquility, California*, Prepared For U. S. Environmental Protection Agency Division Of Stationary Source Enforcement, Washington, D.C., PEDCo Environmental, Inc., Cincinnati, OH, February 1978.

21. *Elbow Enterprises--PM-10 And Total Particulate Testing, Lint Cleaner And Dryer #1 Cyclones*, AIRx Testing, Ventura, CA, November 7-8, 1994.

22. *Stratford Growers, Inc.--PM-10 And Total Particulate Testing, Unloading, Hull Trash, Feeder Trash, Lint Cleaner, Cyclone Robber System, & Motes Trash Cyclones*, AIRx Testing, Ventura, CA, October 26-28, 1994.

23. *Alta Vista Gin--PM-10 And Total Particulate Testing, Battery Condenser, Lint Cleaner, & Motes Trash Cyclones*, AIRx Testing, Ventura, CA, November 3-4, 1994.

24. *Dos Palos Coop Gin--PM-10 And Total Particulate Testing, Unloading, Dryer #2, Overflow, Battery Condenser, & Motes Cyclones*, AIRx Testing, Ventura, CA, October 31 Through November 2, 1994.

9.8 Preserved Fruits And Vegetables

9.8.1 Canned Fruits And Vegetables

9.8.2 Dehydrated Fruits And Vegetables

9.8.3 Pickles, Sauces And Salad Dressings

9.8.1 Canned Fruits And Vegetables

9.8.1.1 General[1-2]

The canning of fruits and vegetables is a growing, competitive industry, especially the international export portion. The industry is made up of establishments primarily engaged in canning fruits, vegetables, fruit and vegetable juices; processing ketchup and other tomato sauces; and producing natural and imitation preserves, jams, and jellies.

9.8.1.2 Process Description[3-6]

The primary objective of food processing is the preservation of perishable foods in a stable form that can be stored and shipped to distant markets during all months of the year. Processing also can change foods into new or more usable forms and make foods more convenient to prepare.

The goal of the canning process is to destroy any microorganisms in the food and prevent recontamination by microorganisms. Heat is the most common agent used to destroy microorganisms. Removal of oxygen can be used in conjunction with other methods to prevent the growth of oxygen-requiring microorganisms.

In the conventional canning of fruits and vegetables, there are basic process steps that are similar for both types of products. However, there is a great diversity among all plants and even those plants processing the same commodity. The differences include the inclusion of certain operations for some fruits or vegetables, the sequence of the process steps used in the operations, and the cooking or blanching steps. Production of fruit or vegetable juices occurs by a different sequence of operations and there is a wide diversity among these plants. Typical canned products include beans (cut and whole), beets, carrots, corn, peas, spinach, tomatoes, apples, peaches, pineapple, pears, apricots, and cranberries. Typical juices are orange, pineapple, grapefruit, tomato, and cranberry. Generic process flow diagrams for the canning of fruits, vegetables, and fruit juices are shown in Figures 9.8.1-1, 9.8.1-2, and 9.8.1-3. The steps outlined in these figures are intended to the basic processes in production. A typical commercial canning operation may employ the following general processes: washing, sorting/grading, preparation, container filling, exhausting, container sealing, heat sterilization, cooling, labeling/casing, and storage for shipment. In these diagrams, no attempt has been made to be product specific and include all process steps that would be used for all products. Figures 9.8.1-1 and 9.8.1-2 show optional operations, as dotted line steps, that are often used but are not used for all products. One of the major differences in the sequence of operations between fruit and vegetable canning is the blanching operation. Most of the fruits are not blanched prior to can filling whereas many of the vegetables undergo this step. Canned vegetables generally require more severe processing than do fruits because the vegetables have much lower acidity and contain more heat-resistant soil organisms. Many vegetables also require more cooking than fruits to develop their most desirable flavor and texture. The methods used in the cooking step vary widely among facilities. With many fruits, preliminary treatment steps (e. g., peeling, coring, halving, pitting) occur prior to any heating or cooking step but with vegetables, these treatment steps often occur after the vegetable has been blanched. For both fruits and vegetables, peeling is done either by a mechanical peeler, steam peeling, or lye peeling. The choice depends upon the type of fruit or vegetable or the choice of the company.

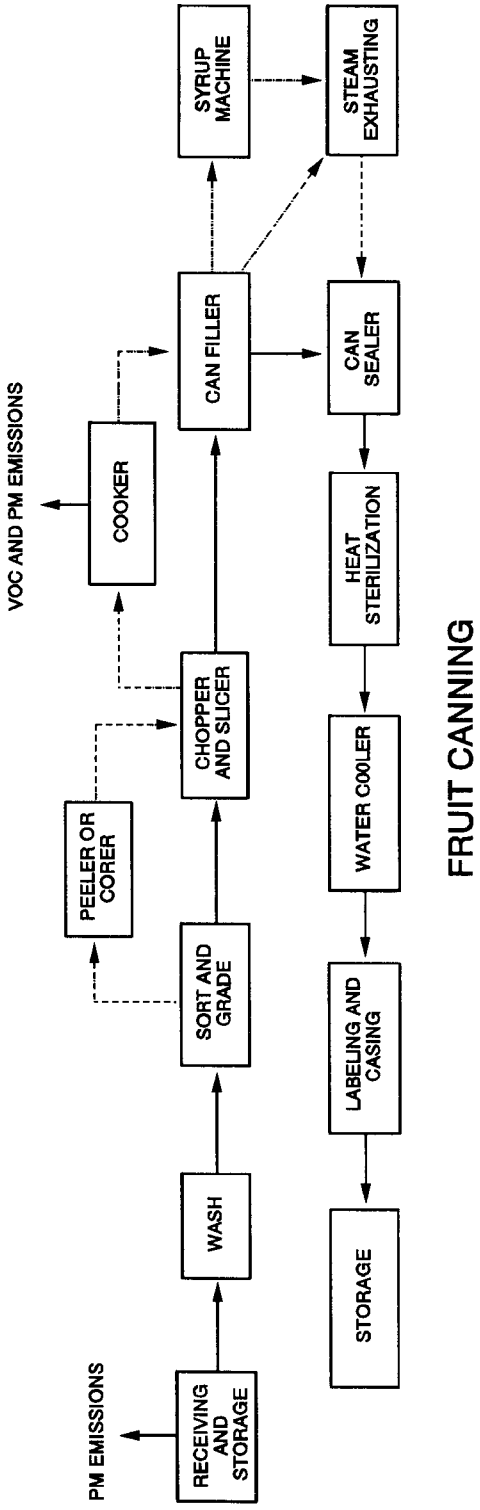

Figure 9.8.1-1. Generic process diagram for fruit canning.

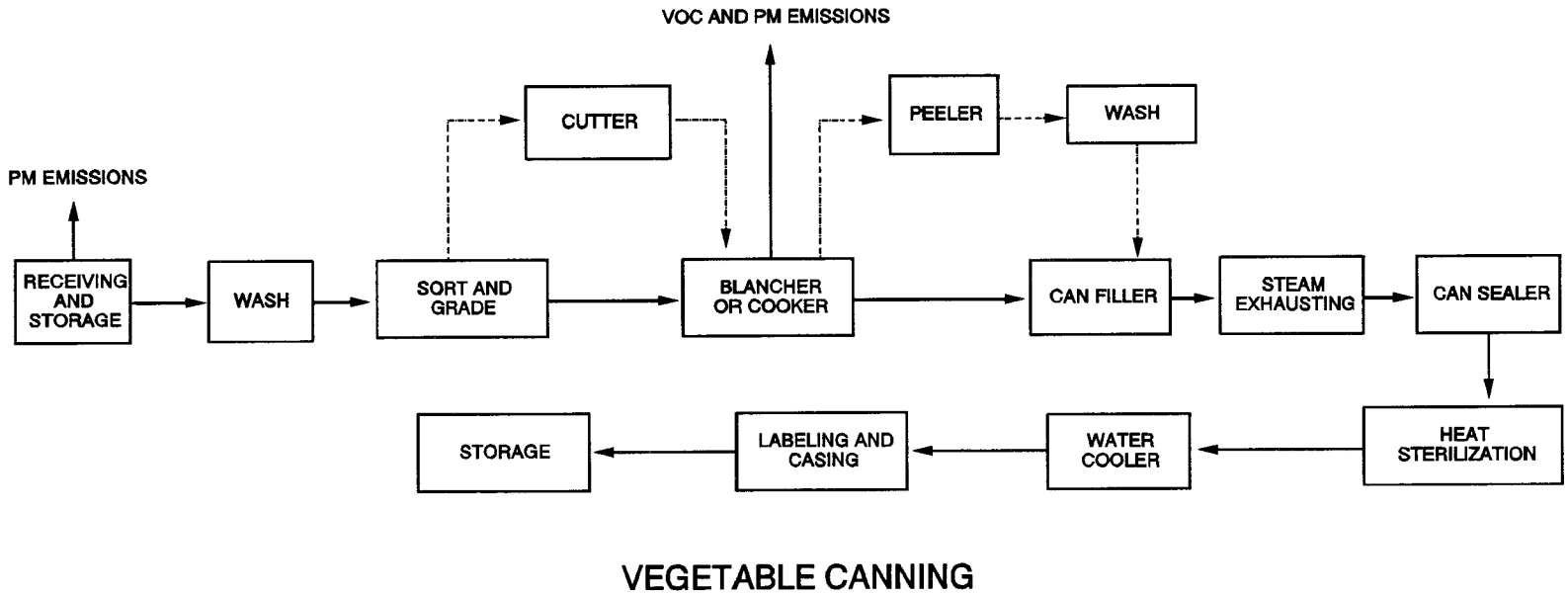

Figure 9.8.1-2. Generic process diagram for vegetable canning.

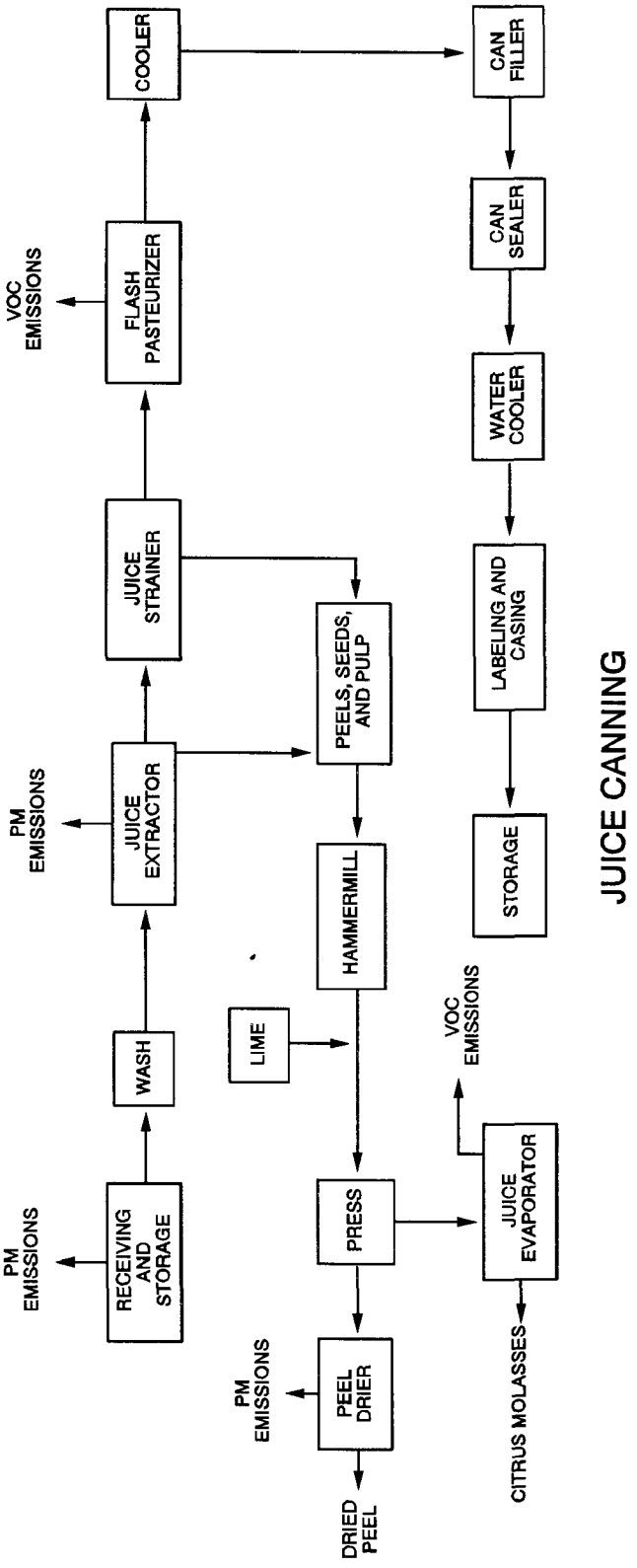

Figure 9.8.1-3. Generic process diagram for juice canning.

Some citrus fruit processors produce dry citrus peel, citrus molasses and D-limonene from the peels and pulp residue collected from the canning and juice operations. Other juice processing facilities use concentrates and raw commodity processing does not occur at the facility. The peels and residue are collected and ground in a hammermill, lime is added to neutralize the acids, and the product pressed to remove excess moisture. The liquid from the press is screened to remove large particles, which are recycled back to the press, and the liquid is concentrated to molasses in an evaporator. The pressed peel is sent to a direct-fired hot-air drier. After passing through a condenser to remove the D-limonene, the exhaust gases from the drier are used as the heat source for the molasses evaporator.

Equipment for conventional canning has been converting from batch to continuous units. In continuous retorts, the cans are fed through an air lock, then rotated through the pressurized heating chamber, and subsequently cooled through a second section of the retort in a separate cold-water cooler. Commercial methods for sterilization of canned foods with a pH of 4.5 or lower include use of static retorts, which are similar to large pressure cookers. A newer unit is the agitating retort, which mechanically moves the can and the food, providing quicker heat penetration. In the aseptic packaging process, the problem with slow heat penetration in the in-container process are avoided by sterilizing and cooling the food separate from the container. Presterilized containers are then filled with the sterilized and cooled product and are sealed in a sterile atmosphere.

To provide a closer insight into the actual processes that occur during a canning operation, a description of the canning of whole tomatoes is presented in the following paragraphs. This description provides more detail for each of the operations than is presented in the generic process flow diagrams in Figures 9.8.1-1, 9.8.1-2, and 9.8.1-3.

Preparation -

The principal preparation steps are washing and sorting. Mechanically harvested tomatoes are usually thoroughly washed by high-pressure sprays or by strong-flowing streams of water while being passed along a moving belt or on agitating or revolving screens. The raw produce may need to be sorted for size and maturity. Sorting for size is accomplished by passing the raw tomatoes through a series of moving screens with different mesh sizes or over differently spaced rollers. Separation into groups according to degree of ripeness or perfection of shape is done by hand; trimming is also done by hand.

Peeling And Coring -

Formerly, tomatoes were initially scalded followed by hand peeling, but steam peeling and lye peeling have also become widely used. With steam peeling, the tomatoes are treated with steam to loosen the skin, which is then removed by mechanical means. In lye peeling, the fruit is immersed in a hot lye bath or sprayed with a boiling solution of 10 to 20 percent lye. The excess lye is then drained and any lye that adheres to the tomatoes is removed with the peel by thorough washing.

Coring is done by a water-powered device with a small turbine wheel. A special blade mounted on the turbine wheel spins and removes the tomato cores.

Filling -

After peeling and coring, the tomatoes are conveyed by automatic runways, through washers, to the point of filling. Before being filled, the can or glass containers are cleaned by hot water, steam, or air blast. Most filling is done by machine. The containers are filled with the solid product and then usually topped with a light puree of tomato juice. Acidification of canned whole tomatoes with 0.1 to 0.2 percent citric acid has been suggested as a means of increasing acidity to a safer and

more desirable level. Because of the increased sourness of the acidified product, the addition of 2 to 3 percent sucrose is used to balance the taste. The addition of salt is important for palatability.

Exhausting -

The objective of exhausting containers is to remove air so that the pressure inside the container following heat treatment and cooling will be less than atmospheric. The reduced internal pressure (vacuum) helps to keep the can ends drawn in, reduces strain on the containers during processing, and minimizes the level of oxygen remaining in the headspace. It also helps to extend the shelf life of food products and prevents bulging of the container at high altitudes.

Vacuum in the can may be obtained by the use of heat or by mechanical means. The tomatoes may be preheated before filling and sealed hot. For products that cannot be preheated before filling, it may be necessary to pass the filled containers through a steam chamber or tunnel prior to the sealing machine to expel gases from the food and raise the temperature. Vacuum also may be produced mechanically by sealing containers in a chamber under a high vacuum.

Sealing -

In sealing lids on metal cans, a double seam is created by interlocking the curl of the lid and flange of the can. Many closing machines are equipped to create vacuum in the headspace either mechanically or by steam-flow before lids are sealed.

Heat Sterilization -

During processing, microorganisms that can cause spoilage are destroyed by heat. The temperature and processing time vary with the nature of the product and the size of the container.

Acidic products, such as tomatoes, are readily preserved at 100°C (212°F). The containers holding these products are processed in atmospheric steam or hot-water cookers. The rotary continuous cookers, which operate at 100°C (212°F), have largely replaced retorts and open-still cookers for processing canned tomatoes. Some plants use hydrostatic cookers and others use continuous-pressure cookers.

Cooling -

After heat sterilization, containers are quickly cooled to prevent overcooking. Containers may be quick cooled by adding water to the cooker under air pressure or by conveying the containers from the cooker to a rotary cooler equipped with a cold-water spray.

Labeling And Casing -

After the heat sterilization, cooling, and drying operations, the containers are ready for labeling. Labeling machines apply glue and labels in one high-speed operation. The labeled cans or jars are the packed into shipping cartons.

9.8.1.3 Emissions And Controls[4,6-9]

Air emissions may arise from a variety of sources in the canning of fruits and vegetables. Particulate matter (PM) emissions result mainly from solids handling, solids size reduction, drying (e. g., citrus peel driers). Some of the particles are dusts, but others (particularly those from thermal processing operations) are produced by condensation of vapors and may be in the low-micrometer or submicrometer particle-size range.

The VOC emissions may potentially occur at almost any stage of processing, but most usually are associated with thermal processing steps, such as cooking, and evaporative concentration. The cooking technologies in canning processes are very high moisture processes so the predominant emissions will be steam or water vapor. The waste gases from these operations may contain PM or, perhaps, condensable vapors, as well as malodorous VOC. Particulate matter, condensable materials, and the high moisture content of the emissions may interfere with the collection or destruction of these VOC. The condensable materials also may be malodorous.

Wastewater treatment ponds may be another source of odors, even from processing of materials that are not otherwise particularly objectionable. Details on the processes and technologies used in waste water collection, treatment, and storage are presented in AP-42 Section 4.3; that section should be consulted for detailed information on the subject.

No emission data quantifying VOC, HAP, or PM emissions from the canned fruits and vegetable industry are available for use in the development of emission factors. Data on emissions from fruit and vegetable canning are extremely limited. Woodroof and Luh discussed the presence of VOC in apricots, cranberry juice, and cherry juice. Van Langenhove, et al., identified volatile compounds emitted during the blanching process of Brussels sprouts and cauliflower under laboratory and industrial conditions. Buttery, et al., studied emissions of volatile aroma compounds from tomato paste.

A number of emission control approaches are potentially available to the canning industry. These include wet scrubbers, dry sorbants, and cyclones. No information is available on controls actually used at canning facilities.

Control of VOC from a gas stream can be accomplished using one of several techniques but the most common methods are absorption, adsorption, and afterburners. Absorptive methods encompass all types of wet scrubbers using aqueous solutions to absorb the VOC. Most scrubber systems require a mist eliminator downstream of the scrubber.

Adsorptive methods could include one of four main adsorbents: activated carbon, activated alumina, silica gel, or molecular sieves. Of these four, activated carbon is the most widely used for VOC control while the remaining three are used for applications other than pollution control. Gas adsorption is a relatively expensive technique and may not be applicable to a wide variety of pollutants.

Particulate control commonly employs methods such as venturi scrubbers, dry cyclones, wet or dry electrostatic precipitators (ESPs), or dry filter systems. The most common controls are likely to be the venturi scrubbers or dry cyclones. Wet or dry ESPs could be used depending upon the particulate loading of the gas stream.

Condensation methods and scrubbing by chemical reaction may be applicable techniques depending upon the type of emissions. Condensation methods may be either direct contact or indirect contact with the shell and tube indirect method being the most common technique. Chemical reactive scrubbing may be used for odor control in selective applications.

References for Section 9.8.1

1. U. S. Department of Commerce, International Trade Administration, U. S. Industrial Outlook 1992--Food and Beverages.

2. 1987 Census of Manufacturers, MC87-1-20-C, Industries Series, Preserved Fruits and Vegetables.

3. B. S. Luh and J. G. Woodroof, ed., *Commercial Vegetable Processing*, 2nd edition, Van Nostrand Reinhold, New York, 1988.

4. J. L. Jones, et al., *Overview Of Environmental Control Measures And Problems In The Food Processing Industries*. Industrial Environmental Research Laboratory, Cincinnati, OH, Kenneth Dostal, Food and Wood Products Branch. Grant No. R804642-01, January 1979.

5. N. W. Deroiser, *The Technology Of Food Preservation, 3rd edition*, The Avi Publishing Company, Inc., Westport, CT, 1970.

6. J. G. Woodroof and B. S. Luh, ed., *Commercial Fruit Processing*, The Avi Publishing Company, Westport, CT, 1986.

7. H. J. Van Langenhove, *et al.*, *Identification Of Volatiles Emitted During The Blanching Process Of Brussels Sprouts And Cauliflower*, Journal of the Science of Food and Agriculture, 55:483-487, 1991.

8. R. G. Buttery, *et al.*, *Identification Of Additional Tomato Paste Volatiles*, Journal of Agricultural and Food Chemistry, 38(3):792-795, 1990.

9. H. J. Rafson, *Odor Emission Control For The Food Industry*, Food Technology, June 1977.

9.8.2 Dehydrated Fruits And Vegetables

9.8.2.1 General[1-2]

Dehydration of fruit and vegetables is one of the oldest forms of food preservation techniques known to man and consists primarily of establishments engaged in sun drying or artificially dehydrating fruits and vegetables. Although food preservation is the primary reason for dehydration, dehydration of fruits and vegetables also lowers the cost of packaging, storing, and transportation by reducing both the weight and volume of the final product. Given the improvement in the quality of dehydrated foods, along with the increased focus on instant and convenience foods, the potential of dehydrated fruits and vegetables is greater than ever.

9.8.2.2 Process Description[1-2]

Dried or dehydrated fruits and vegetables can be produced by a variety of processes. These processes differ primarily by the type of drying method used, which depends on the type of food and the type of characteristics of the final product. In general, dried or dehydrated fruits and vegetables undergo the following process steps: predrying treatments, such as size selection, peeling, and color preservation; drying or dehydration, using natural or artificial methods; and postdehydration treatments, such as sweating, inspection, and packaging.

Predrying Treatments -

Predrying treatments prepare the raw product for drying or dehydration and include raw product preparation and color preservation. Raw product preparation includes selection and sorting, washing, peeling (some fruits and vegetables), cutting into the appropriate form, and blanching (for some fruits and most vegetables). Fruits and vegetables are selected; sorted according to size, maturity, and soundness; and then washed to remove dust, dirt, insect matter, mold spores, plant parts, and other material that might contaminate or affect the color, aroma, or flavor of the fruit or vegetable. Peeling or removal of any undesirable parts follows washing. The raw product can be peeled by hand (generally not used in the United States due to high labor costs), with lye or alkali solution, with dry caustic and mild abrasion, with steam pressure, with high-pressure washers, or with flame peelers. For fruits, only apples, pears, bananas, and pineapples are usually peeled before dehydration. Vegetables normally peeled include beets, carrots, parsnips, potatoes, onions, and garlic. Prunes and grapes are dipped in an alkali solution to remove the natural waxy surface coating which enhances the drying process. Next, the product is cut into the appropriate shape or form (i. e., halves, wedges, slices, cubes, nuggets, etc.), although some items, such as cherries and corn, may by-pass this operation. Some fruits and vegetables are blanched by immersion in hot water (95° to 100°C [203° to 212°F]) or exposure to steam.

The final step in the predehydration treatment is color preservation, also known as sulfuring. The majority of fruits are treated with sulfur dioxide (SO_2) for its antioxidant and preservative effects. The presence of SO_2 is very effective in retarding the browning of fruits, which occurs when the enzymes are not inactivated by the sufficiently high heat normally used in drying. In addition to preventing browning, SO_2 treatment reduces the destruction of carotene and ascorbic acid, which are the important nutrients for fruits. Sulfuring dried fruits must be closely controlled so that enough sulfur is present to maintain the physical and nutritional properties of the product throughout its expected shelf life, but not so large that it adversely affects flavor. Some fruits, such as apples, are treated with solutions of sulfite (sodium sulfite and sodium bisulfite in approximately equal

proportions) before dehydration. Sulfite solutions are less suitable for fruits than burning sulfur (SO_2 gas), however, because the solution penetrates the fruit poorly and can leach natural sugar, flavor, and other components from the fruit.

Although dried fruits commonly use SO_2 gas to prevent browning, this treatment is not practical for vegetables. Instead, most vegetables (potatoes, cabbage, and carrots) are treated with sulfite solutions to retard enzymatic browning. In addition to color preservation, the presence of a small amount of sulfite in blanched, cut vegetables improves storage stability and makes it possible to increase the drying temperature during dehydration, thus decreasing drying time and increasing the drier capacity without exceeding the tolerance for heat damage.

Drying Or Dehydration -

Drying or dehydration is the removal of the majority of water contained in the fruit or vegetable and is the primary stage in the production of dehydrated fruits and vegetables. Several drying methods are commercially available and the selection of the optimal method is determined by quality requirements, raw material characteristics, and economic factors. There are three types of drying processes: sun and solar drying; atmospheric dehydration including stationary or batch processes (kiln, tower, and cabinet driers) and continuous processes (tunnel, continuous belt, belt-trough, fluidized-bed, explosion puffing, foam-mat, spray, drum, and microwave-heated driers); and subatmospheric dehydration (vacuum shelf, vacuum belt, vacuum drum, and freeze driers).

Sun drying (used almost exclusively for fruit) and solar drying (used for fruit and vegetables) of foods use the power of the sun to remove the moisture from the product. Sun drying of fruit crops is limited to climates with hot sun and dry atmosphere, and to certain fruits, such as prunes, grapes, dates, figs, apricots, and pears. These crops are processed in substantial quantities without much technical aid by simply spreading the fruit on the ground, racks, trays, or roofs and exposing them to the sun until dry. Advantages of this process are its simplicity and its small capital investment. Disadvantages include complete dependence on the elements and moisture levels no lower than 15 to 20 percent (corresponding to a limited shelf life). Solar drying utilizes black-painted trays, solar trays, collectors, and mirrors to increase solar energy and accelerate drying.

Atmospheric forced-air driers artificially dry fruits and vegetables by passing heated air with controlled relative humidity over the food to be dried, or by passing the food to be dried through the heated air, and is the most widely used method of fruit and vegetable dehydration. Various devices are used to control air circulation and recirculation. Stationary or batch processes include kiln, tower (or stack), and cabinet driers. Continuous processes are used mainly for vegetable dehydration and include tunnel, continuous belt, belt-trough, fluidized-bed, explosion puffing, foam-mat, spray, drum, and microwave-heated driers. Tunnel driers are the most flexible, efficient, and widely used dehydration system available commercially.

Subatmospheric (or vacuum) dehydration occurs at low air pressures and includes vacuum shelf, vacuum drum, vacuum belt, and freeze driers. The main purpose of vacuum drying is to enable the removal of moisture at less than the boiling point under ambient conditions. Because of the high installation and operating costs of vacuum driers, this process is used for drying raw material that may deteriorate as a result of oxidation or may be modified chemically as a result of exposure to air at elevated temperatures. There are two categories of vacuum driers. In the first category, moisture in the food is evaporated from the liquid to the vapor stage, and includes vacuum shelf, vacuum drum, and vacuum belt driers. In the second category of vacuum driers, the moisture of the food is removed from the product by sublimination, which is converting ice directly into water vapor. The advantages of freeze drying are high flavor retention, maximum retention of nutritional value,

minimal damage to the product texture and structure, little change in product shape and color, and a finished product with an open structure that allows fast and complete rehydration. Disadvantages include high capital investment, high processing costs, and the need for special packing to avoid oxidation and moisture gain in the finished product.

Postdehydration Treatments -

Treatments of the dehydrated product vary according to the type of fruit or vegetable and the intended use of the product. These treatments may include sweating, screening, inspection, instantization treatments, and packaging. Sweating involves holding the dehydrated product in bins or boxes to equalize the moisture content. Screening removes dehydrated pieces of unwanted size, usually called "fines". The dried product is inspected to remove foreign materials, discolored pieces, or other imperfections such as skin, carpel, or stem particles. Instantization treatments are used to improve the rehydration rate of the low-moisture product. Packaging is common to most all dehydrated products and has a great deal of influence on the shelf life of the dried product. Packaging of dehydrated fruits and vegetables must protect the product against moisture, light, air, dust, microflora, foreign odor, insects, and rodents; provide strength and stability to maintain original product size, shape, and appearance throughout storage, handling, and marketing; and consist of materials that are approved for contact with food. Cost is also an important factor in packaging. Package types include cans, plastic bags, drums, bins, and cartons, and depend on the end-use of the product.

9.8.2.3 Emissions And Controls[1,3-6]

Air emissions may arise from a variety of sources in the dehydration of fruits and vegetables. Particulate matter (PM) emissions may result mainly from solids handling, solids size reduction, and drying. Some of the particles are dusts, but other are produced by condensation of vapors and may be in the low-micrometer or submicrometer particle-size range.

The VOC emissions may potentially occur at almost any stage of processing, but most usually are associated with thermal processing steps, such as blanching, drying or dehydration, and sweating. Particulate matter and condensable materials may interfere with the collection or destruction of these VOC. The condensable materials also may be malodorous. The color preservation (sulfuring) stage can produce SO_2 emissions as the fruits and vegetables are treated with SO_2 gas or sulfide solution to prevent discoloration or browning.

Wastewater treatment ponds may be another source of VOC, even from processing of materials that are not otherwise particularly objectionable. Details on the processes and technologies used in wastewater collection, treatment, and storage are presented in AP-42 Section 4.3. That section should be consulted for detailed information on the subject.

No emission data quantifying VOC, HAP, or PM emissions from the dehydrated fruit and vegetable industry are available for use in the development of emission factors. However, some data have been published on VOC emitted during the blanching process for two vegetables and for volatiles from fresh tomatoes. Van Langenhove, et al., identified volatiles emitted during the blanching process of Brussels sprouts and cauliflower under laboratory and industrial conditions. In addition, Buttery, et al., performed a quantitative study on aroma volatiles emitted from fresh tomatoes.

A number of VOC and particulate emission control techniques are available to the dehydrated fruit and vegetable industry. No information is available on the actual usage of emission control

devices in this industry. Potential options include the traditional approaches of wet scrubbers, dry sorbents, and cyclones.

Control of VOC from a gas stream can be accomplished using one of several techniques but the most common methods are absorption and adsorption. Absorptive methods encompass all types of wet scrubbers using aqueous solutions to absorb the VOC. Most scrubber systems require a mist eliminator downstream of the scrubber.

Adsorptive methods could include one of four main adsorbents: activated carbon, activated alumina, silica gel, or molecular sieves. Of these four, activated carbon is the most widely used for VOC control while the remaining three are used for applications other than pollution control. Gas adsorption is a relatively expensive technique and may not be applicable to a wide variety of pollutants.

Particulate control commonly employs methods such as venturi scrubbers, dry cyclones, wet or dry electrostatic precipitators (ESPs), or dry filter systems. The most common controls are likely to be the venturi scrubbers or dry cyclones. Wet or dry ESPs could be used depending upon the particulate loading of the gas stream.

Condensation methods and scrubbing by chemical reaction may be applicable techniques depending upon the type of emissions. Condensation methods may be either direct contact or indirect contact with the shell and tube indirect method being the most common technique. Chemical reactive scrubbing may be used for odor control in selective applications.

References For Section 9.8.2

1. L. P. Somogyi and B. S. Luh, "Dehydration Of Fruits", *Commercial Fruit Processing*, Second Ed., J. G. Woodroof and B. S. Luh, Editors. AVI Publishing Company, Inc., 1986.

2. L. P. Somogyi and B. S. Luh, "Vegetable Dehydration", *Commercial Vegetable Processing*, Second Ed., B. S. Luh and J. G. Woodroof, Editors, An AVI Book Published by Van Nostrand Reinhold, 1988.

3. J. L. Jones, *et al.*, "Overview Of Environmental Control Measures And Problems In The Food Processing Industries", Industrial Environmental Research Laboratory, Cincinnati, OH, K. Dostal, Food and Wood Products Branch, Grant No. R804642-01, January 1979.

4. H. J. Van Langenhove, *et al.*, "Identification Of Volatiles Emitted During The Blanching Process Of Brussels Sprouts And Cauliflower", *Journal Of The Science Of Food And Agriculture*, 55:483-487, 1991.

5. R. G. Buttery, *et al.*, "Fresh Tomato Aroma Volatiles: A Quantitative Study", *J. Agric. Food Chem.*, 35:540-544, 1987.

6. H. J. Rafson, "Odor Emission Control For The Food Industry", *Food Technology*, June 1977.

9.8.3 Pickles, Sauces, and Salad Dressings

9.8.3.1 General[1]

This industry includes facilities that produce pickled fruits and vegetables, salad dressings, relishes, various sauces, and seasonings. The two vegetables that account for the highest production volume in the U. S. are cucumbers (pickles) and cabbage (sauerkraut). Sauces entail a wide diversity of products but two of the more common types are Worcestershire sauce and hot pepper sauces. Salad dressings are generally considered to be products added to and eaten with salads. In 1987, 21,500 thousand people were employed in the industry. California, Georgia, Michigan, and Pennsylvania are the leading employment States in the industry.

9.8.3.2 Process Description[2-3]

Pickled Vegetables —

In the U. S., vegetables are pickled commercially using one of two general processes: brining or direct acidification (with or without pasteurization), or various combinations of these processes. For sodium chloride brining, fresh vegetables are placed in a salt solution or dry salt is added to cut or whole vegetables whereupon the vegetables undergo a microbial fermentation process activated by the lactic acid bacteria, yeasts, and other microorganisms. Direct acidification of fresh or brined vegetables, through the addition of vinegar, is a major component of commercial pickling. This process may be accompanied by pasteurization, addition of preservatives, refrigeration, or a combination of these treatments. While cucumbers, cabbage, and olives constitute the largest volume of vegetables brined or pickled in the U. S., other vegetables include peppers, onions, beans, cauliflower, and carrots.

In the United States, the term "pickles" generally refers to pickled cucumbers. Three methods currently are used to produce pickles from cucumbers: brine stock, fresh pack, and refrigerated. Smaller quantities are preserved by specialized brining methods to produce pickles for delicatessens and other special grades of pickles. Pickling cucumbers are harvested and transported to the processing plants. The cucumbers may be field graded and cooled, if necessitated by the temperature, prior to transport to the plants.

The brine stock process begins with brining the cucumbers through the addition of salt or a sodium chloride brining solution. The cucumbers undergo a fermentation process in which lactic acid is formed. During fermentation, the cucumbers are held in 5 to 8 percent salt; after fermentation, the salt content is increased weekly in 0.25 to 0.5 percent increments until the final holding strength is 8 to 16 percent salt. The cucumbers, called brine stock, are then graded and cut (optional), before being desalted by washing in an open tank with water at ambient temperature to obtain the desired salt level and processed into dill, sour, sweet, or other pickle products. Containers are filled with the cut or whole pickles, and sugar and vinegars are added. Preservatives are also added if the product is not pasteurized. The containers are then vacuum sealed and pasteurized (optional) until the temperature at the center of the cucumbers reaches about 74°C (165°F) for about 15 minutes. The product is then cooled, and the containers are labeled, packaged, and stored.

The fresh pack process begins with grading of the pickling cucumbers, followed by washing with water. The cucumbers are then either cut and inspected before packaging, or are sometimes "blanched" if they are to be packaged whole. The "blanching" consists of rinsing the cucumber with

warm water to make it more pliable and easier to pack in the container. It is not a true blanching process. Containers are filled with the cut or whole cucumbers, and then salt, spices, and vinegars are added. The containers are then vacuum sealed and heated (pasteurized) until the temperature at the center of the cucumbers reaches about 74°C (165°F) for about 15 minutes. The product is then cooled, and the containers are labeled, packaged, and stored.

The refrigerated process begins with grading of the pickling cucumbers, followed by washing with water. The washed cucumbers are packed into containers, and then salt, spices, vinegars, and preservatives (primarily sodium benzoate) are added. The containers are then vacuum sealed, labeled, and refrigerated at 34° to 40°F. In this process, the cucumbers are not heat-processed before or after packing.

In the sauerkraut process the cabbage is harvested, transported to the processing plant, washed, and prepared for the fermentation by coring, trimming, and shredding. The shredded cabbage is conveyed to a fermentation tank where salt is added up to a final concentration of 2 to 3 percent (preferably 2.25 percent), by weight. After salt addition, the mixture is allowed to ferment at ambient temperature in a closed tank. If insufficient salt is added or air is allowed to contact the surface of the cabbage, yeast and mold will grow on the surface and result in a softening of the final sauerkraut product. When fermentation is complete, the sauerkraut contains 1.7 to 2.3 percent acid, as lactic acid. Following fermentation, the sauerkraut is packaged in cans, plastic bags, or glass containers; cans are the most prevalent method. In the canning process, the sauerkraut, containing the original or diluted fermentation liquor, is heated to 85° to 88°C (185° to 190°F) by steam injection in a thermal screw and then packed into cans. The cans are steam exhausted, sealed, and cooled. After cooling, the cans are labeled, packed, and stored for shipment. In the plastic bag process, the sauerkraut, containing the fermentation liquor, is placed in plastic bags and chemical additives (benzoic acid, sorbic acid, and sodium bisulfite) introduced as preservatives. The bags are sealed and refrigerated. Small quantities, approximately 10 percent of the production, are packaged in glass containers, which may be preserved by heating or using chemical additives.

Sauces —

A typical sauce production operation involves the mixture of several ingredients, often including salts, vinegars, sugar, vegetables, and various spices. The mixture is allowed to ferment for a period of time, sealed in containers, and pasteurized to prevent further fermentation. The production processes for Worcestershire sauce and hot pepper sauces are briefly described as examples of sauce production.

The name "Worcestershire Sauce" is now a generic term for a type of food condiment that originated in India. In the preparation of the true sauce, a mixture of vinegar, molasses, sugar, soy, anchovies, tamarinds, eschalots, garlic, onions, and salt is prepared and well mixed. Spices, flavorings, and water are added and the mixture transferred to an aging tank, sealed, and allowed to mature and ferment over a period of time. The fermenting mixture is occasionally agitated to ensure proper blending. After fermentation is complete, the mixture is processed by filtration through a mesh screen which allows the finer particles of the mixture to remain in the liquid. The product is then pasteurized prior to bottling to prevent further fermentation. Following bottling, the product is cooled, labeled, and packaged.

Hot sauce or pepper sauce is a generic name given to a large array of bottled condiments produced by several manufacturers in the U. S. The hot peppers, usually varieties of *Capsicum annum* and *Capsicum frutescens*, give the products their heat and characteristic flavor; vinegar is the usual liquid medium. Manufacturing processes vary by producer; however, in most, the harvested

hot peppers are washed and either ground for immediate use or stored whole in brine for several months until processed. In processing, the whole peppers are ground, salt and vinegar added, and the mixture passed through a filter to remove seeds and skin. The end-product, a stable suspension of the pulp from the pepper, vinegar, and salt, is then bottled, labeled, and stored for shipment.

Salad Dressings —

Salad dressings (except products modified in calories, fat, or cholesterol) are typically made up of oil, vinegar, spices, and other food ingredients to develop the desired taste. These dressings are added to many types of foods to enhance flavor. There are U. S. FDA Standards of Identity for three general classifications of salad dressings: mayonnaise, spoonable (semisolid) salad dressing, and French dressing. All other dressings are nonstandardized and are typically referred to as "pourable".

Mayonnaise is a semisolid emulsion of edible vegetable oil, egg yolk or whole egg, acidifying ingredients (vinegar, lemon or lime juice), seasonings (e. g., salt, sweeteners, mustard, paprika), citric acid, malic acid, crystallization inhibitors, and sequestrants to preserve color and flavor. Mayonnaise is an oil-in-water type emulsion where egg is the emulsifying agent and vinegar and salt are the principal bacteriological preservatives. The production process begins with mixing water, egg, and dry ingredients and slowly adding oil while agitating the mixture. Vinegar is then added to the mixture and, after mixing is complete, containers are filled, capped, labeled, and stored or shipped. Improved texture and uniformity of the final product is achieved through the use of colloidalizing or homogenizing machines.

Salad dressing is a spoonable (semisolid) combination of oil, cooked starch paste base, and other ingredients. During salad dressing production, the starch paste base is prepared by mixing starch (e. g., food starch, tapioca, wheat or rye flours) with water and vinegar. Optional ingredients include salt, nutritive carbohydrate sweeteners (e. g., sugar, dextrose, corn syrup, honey), any spice (except saffron and tumeric) or natural flavoring, monosodium glutamate, stabilizers and thickeners, citric and/or malic acid, sequestrants, and crystallization inhibitors. To prepare the salad dressing, a portion of the starch paste and other optional ingredients, except the oil, are blended and then the oil is slowly added to form a "preemulsion". When one-half of the oil is incorporated, the remainder of the starch paste is added at the same rate as the oil. After all of the starch paste and oil have been added, the mixture continues to blend until the ingredients are thoroughly mixed and then the mixture is milled to a uniform consistency. The salad dressing is placed into containers that are subsequently capped, labeled, and stored or shipped.

Liquid dressings, except French dressing, do not have a FDA Standard of Identity. They are pourable products that contain vegetable oil as a basic ingredient. Dressings may also contain catsup, tomato paste, vinegars, cheese, sherry, spices, and other natural ingredients. Liquid dressings are packaged either as separable products with distinct proportions of oil and aqueous phases or as homogenized dressings that are produced by the addition of stabilizers and emulsifiers. The homogenized dressings are then passed through a homogenizer or colloidalizing machine prior to bottling.

9.8.3.3 Emissions And Controls[4]

No source tests have been performed to quantify emissions resulting from the production of pickles, sauerkraut, sauces, or salad dressings. For most of these industries, processes are conducted in closed tanks or other vessels and would not be expected to produce significant emissions. For some products, in certain instances, the potential exists for emissions of particulate matter (PM) or odor (VOC).

Emissions of PM potentially could result from solids handling, solids size reduction, and cooking. If raw vegetables are transported directly from the field, the unloading of these vegetables could result in emissions of dust or vegetative matter. For those products that involve cooking or evaporative condensation in open vessels, PM emissions may be produced by condensation of vapors and may be in the low-micrometer or submicrometer particle-size range.

The VOC emissions are most usually associated with thermal processing steps (e. g., cooking or evaporative condensation) or other processing steps performed in open vessels. Thermal processing steps conducted in closed vessels generally do not result in VOC emissions. Gaseous compounds emitted from those steps conducted in open vessels may contain malodorous VOC.

Because no emission data are available that quantify any VOC, HAP, or PM emissions from any of these industries, emission factors cannot be developed.

A number of VOC and particulate emission control techniques are potentially available to these industries. These include the traditional approaches of wet scrubbers, dry sorbants, and cyclones. No information is available on controls actually used in these industries. The controls discussed in this section are ones that theoretically could be used. The applicability of controls and the specific type of control device or combination of devices would vary from facility to facility depending upon the particular nature of the emissions and the pollutant concentration in the gas stream.

For general industrial processes, control of VOC from a gas stream can be accomplished using one of several techniques but the most common methods are absorption, adsorption, and afterburners. Absorptive methods encompass all types of wet scrubbers using aqueous solutions to absorb the VOC. The most common scrubber systems are packed columns or beds, plate columns, spray towers, or other types of towers. Adsorptive methods could include one of four main adsorbents: activated carbon, activated alumina, silica gel, or molecular sieves; activated carbon is the most widely used for VOC control. Afterburners may be either thermal incinerators or catalytic combustors.

Particulate control commonly employs methods such as venturi scrubbers, dry cyclones, wet or dry electrostatic precipitators (ESPs), or dry filter systems. The most common controls are likely to be the venturi scrubbers or dry cyclones. Wet or dry ESPs could be used depending upon the particulate loading of the gas stream.

References For Section 9.8.3

1. 1987 Census of Manufacturers, MC87-1-20-C, Industries Series, Preserved Fruits And Vegetables.

2. G. Fuller and G. G. Dull, "Processing Of Horticultural Crops In The United States", in *Handbook Of Processing And Utilization In Agriculture*, CRC Press, Inc., Boca Raton, FL, 1983.

3. N.W. Desrosier, *Elements Of Food Technology*, AVI Publishing Company, Westport, CT, 1977.

4. H. J. Rafson, *Odor Emission Control For The Food Industry*, Food Technology, June 1977.

9.9 Grain Processing

9.9.1 Grain Elevators And Processes

9.9.2 Cereal Breakfast Food

9.9.3 Pet Food

9.9.4 Alfalfa Dehydration

9.9.5 Pasta Manufacturing

9.9.6 Bread Baking

9.9.7 Corn Wet Milling

9.9.1 Grain Elevators And Processes

9.9.1.1 Process Description[1-14]

Grain elevators are facilities at which grains are received, stored, and then distributed for direct use, process manufacturing, or export. They can be classified as either "country" or "terminal" elevators, with terminal elevators further categorized as inland or export types. Operations other than storage, such as cleaning, drying, and blending, often are performed at elevators. The principal grains and oilseeds handled include wheat, corn, oats, rice, soybeans, and sorghum.

Country elevators are generally smaller elevators that receive grain by truck directly from farms during the harvest season. These elevators sometimes clean or dry grain before it is transported to terminal elevators or processors. Terminal elevators dry, clean, blend, and store grain before shipment to other terminals or processors, or for export. These elevators may receive grain by truck, rail, or barge, and generally have greater grain handling and storage capacities than do country elevators. Export elevators are terminal elevators that load grain primarily onto ships for export.

Regardless of whether the elevator is a country or terminal, there are two basic types of elevator design: traditional and modern. Traditional grain elevators are typically designed so the majority of the grain handling equipment (e.g., conveyors, legs, scales, cleaners) are located inside a building or structure, normally referred to as a headhouse. The traditional elevator often employs belt conveyors with a movable tripper to transfer the grain to storage in concrete or steel silos. The belt and tripper combination is located above the silos in an enclosed structure called the gallery or bin deck. Grain is often transported from storage using belt conveyors located in an enclosed tunnel beneath the silos. Particulate emissions inside the elevator structure may be controlled using equipment such as cyclones, fabric filters, dust covers, or belt wipers; grain may be oil treated to reduce emissions. Controls are often used at unloading and loading areas and may include cyclones, fabric filters, baffles in unloading pits, choke unloading, and use of deadboxes or specially designed spouts for grain loading. The operations of traditional elevators are described in more detail in Section 2.2.1. Traditional elevator design is generally associated with facilities built prior to 1980.

Country and terminal elevators built in recent years have moved away from the design of the traditional elevators. The basic operations performed at the elevators are the same; only the elevator design has changed. Most modern elevators have eliminated the enclosed headhouse and gallery (bin decks). They employ a more open structural design, which includes locating some equipment such as legs, conveyors, cleaners, and scales, outside of an enclosed structure. In some cases, cleaners and screens may be located in separate buildings. The grain is moved from the unloading area using enclosed belt or drag conveyors and, if feasible, the movable tripper has been replaced with enclosed distributors or turn-heads for direct spouting into storage bins and tanks. The modern elevators are also more automated, make more use of computers, and are less labor-intensive. Some traditional elevators have also been partially retrofitted or redesigned to incorporate enclosed outside legs, conveyors, cleaners, and other equipment. Other techniques used to reduce emissions include deepening the trough of the open-belt conveyors and slowing the conveyor speed, and increasing the size of leg belt buckets and slowing leg velocity. At loading and unloading areas of modern elevators, the controls cited above for traditional elevators can also be used to reduce emissions.

The first step at a grain elevator is the unloading of the incoming truck, railcar, or barge. A truck or railcar discharges its grain into a hopper, from which the grain is conveyed to the main part of the elevator. Barges are unloaded by a bucket elevator (marine leg) that is extended down into the barge hold or by cranes using clam shell buckets. The main building at an elevator, where grain is elevated and distributed, is called

the "headhouse". In the headhouse, grain is lifted on one of the elevator legs and is typically discharged onto the gallery belt, which conveys the grain to the storage bins. A "tripper" diverts grain off the belt and into the desired bin. Other modes of transfer include augers and screw conveyors. Grain is often cleaned, dried, and cooled for storage. Once in storage, grain may be transferred one or more times to different storage bins or may be emptied from a bin, treated or dried, and stored in the same or a different bin. For shipping, grain is discharged from bins onto the tunnel belt below, which conveys it to the scale garner and to the desired loadout location (possibly through a surge bin). Figure 9.9.1-1 presents the major process operations at a grain elevator.

A grain processing plant or mill receives grain from an elevator and performs various manufacturing steps that produce a finished food product. The grain receiving and handling operations at processing plants and mills are basically the same as at grain elevators. Examples of processing plants are flour mills, oat mills, rice mills, dry corn mills, and animal feed mills. The following subsections describe the processing of the principal grains. Additional information on grain processing may be found in AP-42 Section 9.9.2, Cereal Breakfast Food, and AP-42 Section 9.9.7, Corn Wet Milling.

9.9.1.1.1 Flour Milling[2,5] -

Most flour mills produce wheat flour, but durum wheat and rye are also processed in flour mills. The wheat flour milling process consists of 5 main steps: (1) grain reception, preliminary cleaning, and storage; (2) grain cleaning; (3) tempering or conditioning; (4) milling the grain into flour and its byproducts; and (5) storage and/or shipment of finished product. A simplified diagram of a typical flour mill is shown in Figure 9.9.1-2. Wheat arrives at a mill and, after preliminary cleaning, is conveyed to storage bins. As grain is needed for milling, it is withdrawn and conveyed to the mill area where it first enters a separator (a vibrating screen), then, an aspirator to remove dust and lighter impurities, and then passes over a magnetic separator to remove iron and steel particles. From the magnetic separator, the wheat enters a disc separator designed to catch individual grains of wheat and reject larger or smaller material and then to a stoner for removal of stones, sand, flints, and balls of caked earth or mud. The wheat then moves into a scourer which buffs each kernel and removes more dust and loose bran (hull or husk). Following the scouring step, the grain is sent to the tempering bins where water is added to raise the moisture of the wheat to make it easier to grind. When the grain reaches the proper moisture level, it is passed through an impact machine as a final cleaning step. The wheat flows into a grinding bin and then into the mill itself.

The grain kernels are broken open in a system of breaks by sets of corrugated rolls, each set taking feed from the preceding one. After each break, the grain is sifted. The sifting system is a combination of sieving operations (plansifters) and air aspiration (purifiers). The flour then passes through the smooth reducing rolls, which further reduce the flour-sized particles and facilitate the removal of the remaining bran and germ particles. Plansifters are used behind the reducing rolls to divide the stock into over-sized particles, which are sent back to the reducing rolls, and flour, which is removed from the milling system. Flour stock is transported from the milling system to bulk storage bins and subsequently packaged for shipment.

Generally, durum wheat processing comprises the same steps as those used for wheat flour milling. However, in the milling of durum, middlings rather than flour are the desired product. Consequently, the break system, in which middlings are formed, is emphasized over the part of the reduction system in which flour is formed. Grain receiving, cleaning, and storage are essentially identical for durum and flour milling. The tempering step varies only slightly between the two processes. The tempering of durum uses the same equipment as wheat, but the holding times are shorter. Only the grain milling step differs significantly from the comparable flour milling step.

The break system in a durum mill generally has at least five sets of rolls for a gradual reduction of the stock to avoid producing large amounts of break flour. The rolls in the reduction system are used for

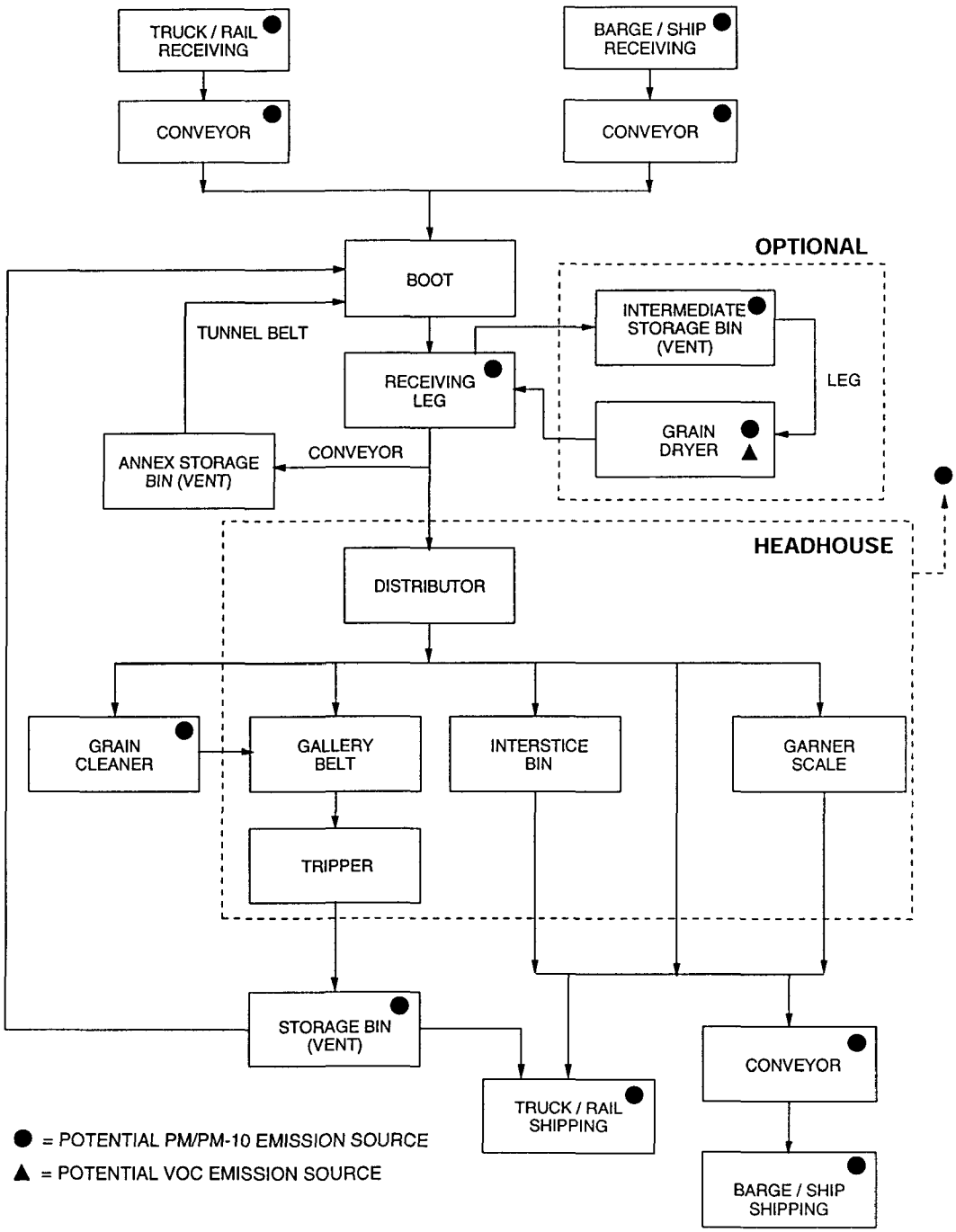

Figure 9.9.1-1. Major process operations at a grain elevator.

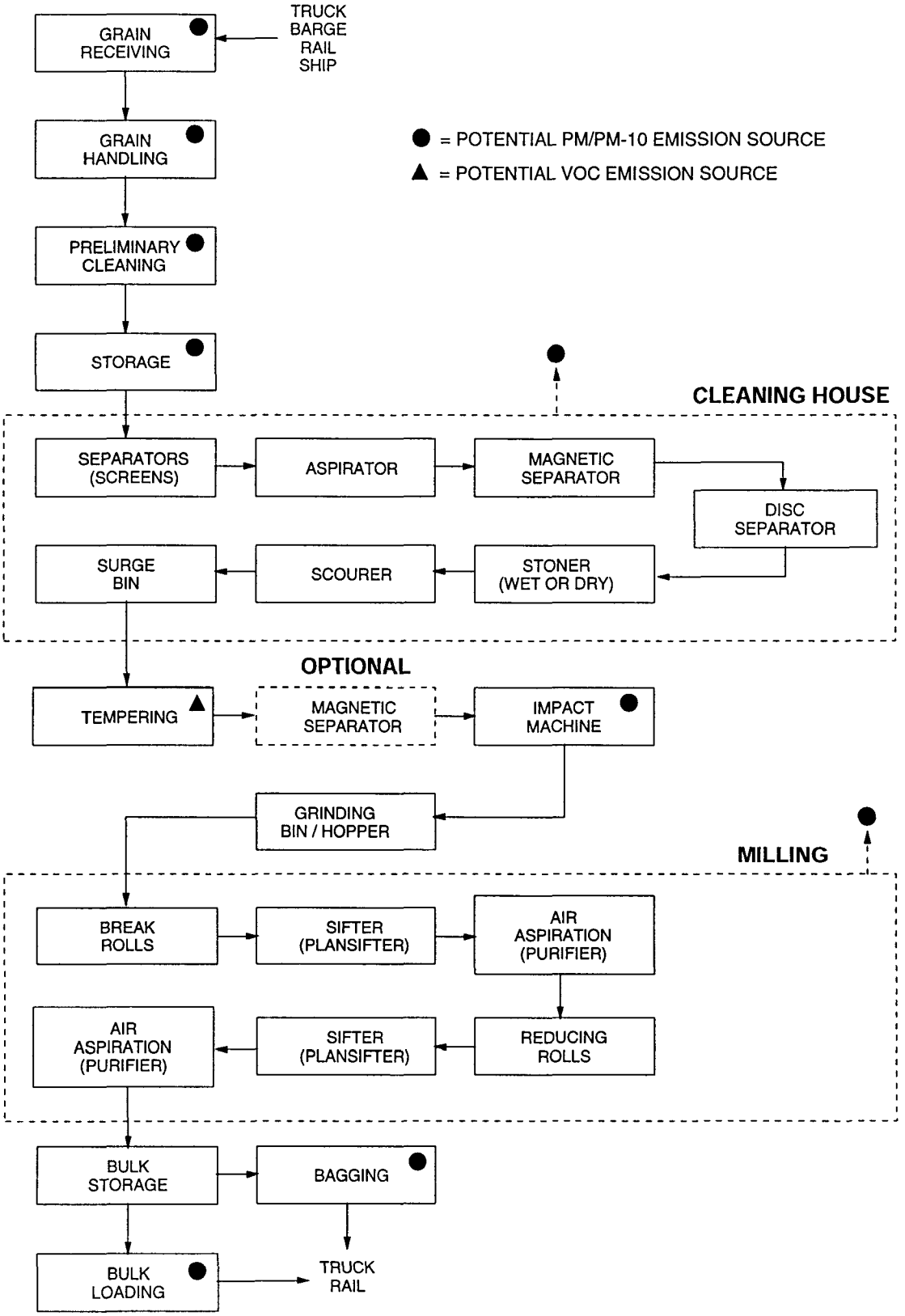

Figure 9.9.1-2. Simplified process flow diagram of a typical flour mill.

sizing only, and not to produce flour. The sizing produces a uniform product for sale. The sifting system differs from that in a wheat flour mill in that it relies heavily on purifiers. In place of plansifters, conventional sieves are more common and are used to make rough separations ahead of the purifiers.

Rye milling and wheat flour milling are quite similar processes. The purpose of both processes is to make flour that is substantially free of bran and germ. The same basic machinery and process are employed. The flow through the cleaning and tempering portions of a rye mill is essentially the same as the flow through the wheat flour mill. However, because rye is more difficult to clean than wheat, this cleaning operation must be more carefully controlled.

In contrast to wheat milling, which is a process of gradual reduction with purification and classification, rye milling does not employ gradual reduction. Both the break and reduction roller mills in a rye mill are corrugated. Following grinding, the screening systems employ plansifters like those used in wheat flour mills. There is little evidence of purifier use in rye mills.

The wheat milling and rye milling processes are very similar because flour is the product of the break rolling system. In durum wheat flour milling, the intent is to produce as little flour as possible on the break rolls. As in wheat flour milling, the intent in rye milling is to make as much rye flour as possible on the break rolls. Consequently, there are more break rolls in proportion to reduction rolls in a rye mill than in a durum wheat flour mill.

9.9.1.1.2 Oat Milling[2,7] -

The milling process for oats consists of the following steps: (1) reception, preliminary cleaning, and storage; (2) cleaning; (3) drying and cooling; (4) grading and hulling; (5) cutting; (6) steaming; and (7) flaking. A simplified flow diagram of the oat milling process is shown in Figure 9.9.1-3. The receiving and storage operations are comparable to those described for grain elevators and for the wheat flour milling process. Preliminary cleaning removes coarse field trash, dust, loose chaff, and other light impurities before storage. After the oats are removed from storage, they flow to a milling separator combining coarse and fine screening with an efficient aspiration. In the next sequence of specialized cleaning operations, the oats are first routed to a disk separator for stick removal, and then are classified into three size categories. Each size category is subjected to a variety of processes (mechanical and gravitational separation, aspiration, and magnetic separation) to remove impurities. Large and short hulled oats are processed separately until the last stages of milling.

The next step in the oat processing system is drying and cooling. Oats are dried using pan dryers, radiator column dryers, or rotary steam tube dryers. Oats typically reach a temperature of 88° to 98°C (190° to 200°F) here, and the moisture content is reduced from 12 percent to 7 to 10 percent. After drying and cooling, the oats are ready for hulling; hulled oats are called groats. Some mills are now hulling oats with no drying or conditioning, then drying the groats separately to develop a toasted flavor. Hulling efficiency can be improved by prior grading or sizing of the oats. The free hulls are light enough that aspirators remove them quite effectively.

Generally, the final step in the large oat system is the separation of groats totally free of whole oats that have not had the hulls removed. These groats bypass the cutting operation and are directed to storage prior to flaking. The rejects are sent to the cutting plant. The cutting plant is designed to convert the groats into uniform pieces while producing a minimum of flour. The cut material is now ready for the flaking plant. First, the oats are conditioned by steaming to soften the groats thereby promoting flaking with a minimum of breakage. The steamed groats pass directly from the steamer into the flaking rolls. Shakers under the rolls remove fines and overcooked pieces are scalped off. The flakes generally pass

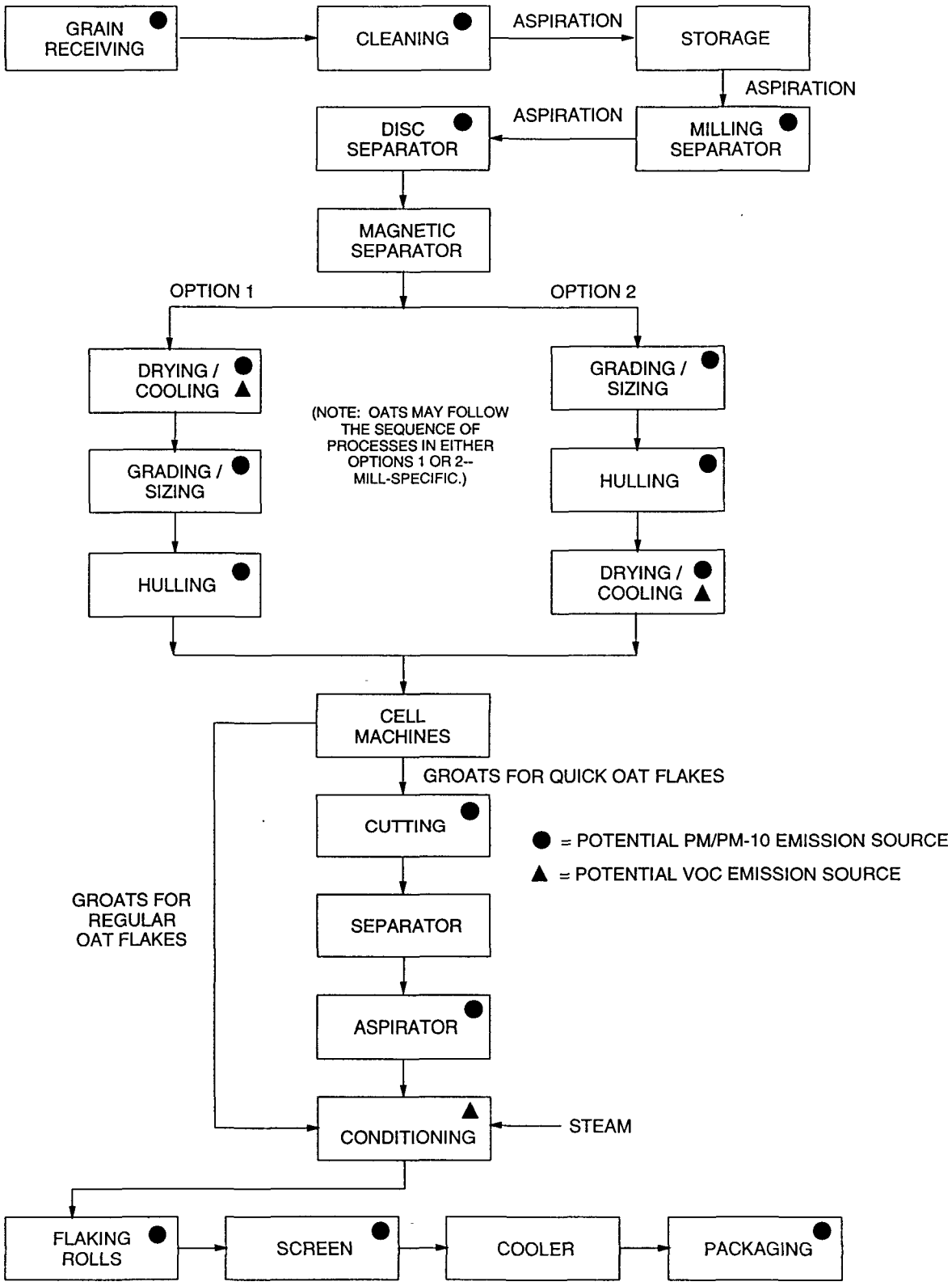

Figure 9.9.1-3. Flow diagram for oat processing operations.[8]

through a dryer and cooler to quickly reduce moisture content and temperature which ensures acceptable shelf life. The cooled flakes are then conveyed to the packaging system.

9.9.1.1.3 Rice Milling[2,8-10]-

The first step in rice processing after harvest is drying using either fixed-bed or continuous-flow dryers to reduce the wet basis moisture content (MCwb) from 24 to 25 percent to 13 to 14 percent MCwb. Essentially all of the rice is dried either on the farm or at commercial drying facilities prior to shipping to the rice mill. After the rice is dried, it is stored and subsequently shipped to either conventional or parboil rice mills for further processing. There are three distinct stages in both mills: (1) rough rice receiving, cleaning, drying, and storage; (2) milling; and (3) milled rice and byproduct bagging, packaging, and shipping. A simplified flow diagram of the rice milling process is shown in Figure 9.9.1-4.

Grain is received primarily by truck and rail. The rough rice is precleaned using combinations of scalpers, screens, aspirators, and magnetic separators and then passed through a stoner, or gravity separator, to remove stones from the grain. The cleaned rice is transported to a disk huller where the rice is dehulled. The rice then passes through a sieve to remove bran and small brokens and to an aspirator to remove hulls. The unshelled rice grains (commonly called paddy) and brown rice are separated in a paddy separator. The unshelled paddy is then fed into another pair of shellers set closer together than the first set, and the process of shelling, aspiration, and separation is repeated.

From the paddy machines, the rice is conveyed to a sequence of milling machines called whitening cones, which scour off the outer bran coats and the germ from the rice kernels. Milling may be accomplished by a single pass through a mill or by consecutive passages through multiple whitening cones. The discharge from each stage is separated by a sieve. After the rice is milled, it passes through a polishing cone, which removes the inner bran layers and the proteinaceous aleurone layer. Because some of the kernels are broken during milling, a series of classifiers, known as trieurs, is used to separate the different size kernels. The rice may be sold at this point as polished, uncoated rice, or it may be conveyed to machines known as trumbels, in which the rice is coated with talc and glucose to give the surface a gloss. The rice is transferred to bulk storage prior to packing and shipping. For packing, the rice is transported to a packing machine where the product is weighed and placed in burlap sacks or other packaging containers.

In parboiling mills, the cleaned rough rice is steamed and dried prior to the milling operations. Pressure vessels are used for the steaming step, and steam tube dryers are used to dry the rice to 11 to 13 percent MCwb. Following the drying step, the rice is milled in conventional equipment to remove hull (bran), and germ.

9.9.1.1.4 Corn Dry Milling[2,12-13] -

Corn is dry milled by either a degerming or a nondegerming system. Because the degerming system is the principal system used in the United States, it will be the focus of the dry corn milling process description here. A simplified flow diagram of the corn dry milling process is shown in Figure 9.9.1-5. The degerming dry corn milling process is more accurately called the tempering degerminating (TD) system. The degerming system involves the following steps after receiving the grain: (1) dry cleaning, and if necessary, wet cleaning; (2) tempering; (3) separation of hull, germ, and tip cap from the endosperm in the degerminator; (4) drying and cooling of degermer product; (5) multistep milling of degermer product through a series of roller mills, sifters, aspirators, and purifiers; (6) further drying of products, if necessary; (7) processing of germ fraction for recovery of crude corn oil; and (8) packaging and shipping of products.

Unloading and dry cleaning of corn is essentially the same as described for wheat. However, for corn, surface dirt and spores can best be removed by wet cleaning, which involves a washing-destoning unit followed by a mechanical dewatering unit. After cleaning, the corn is sent through the tempering or

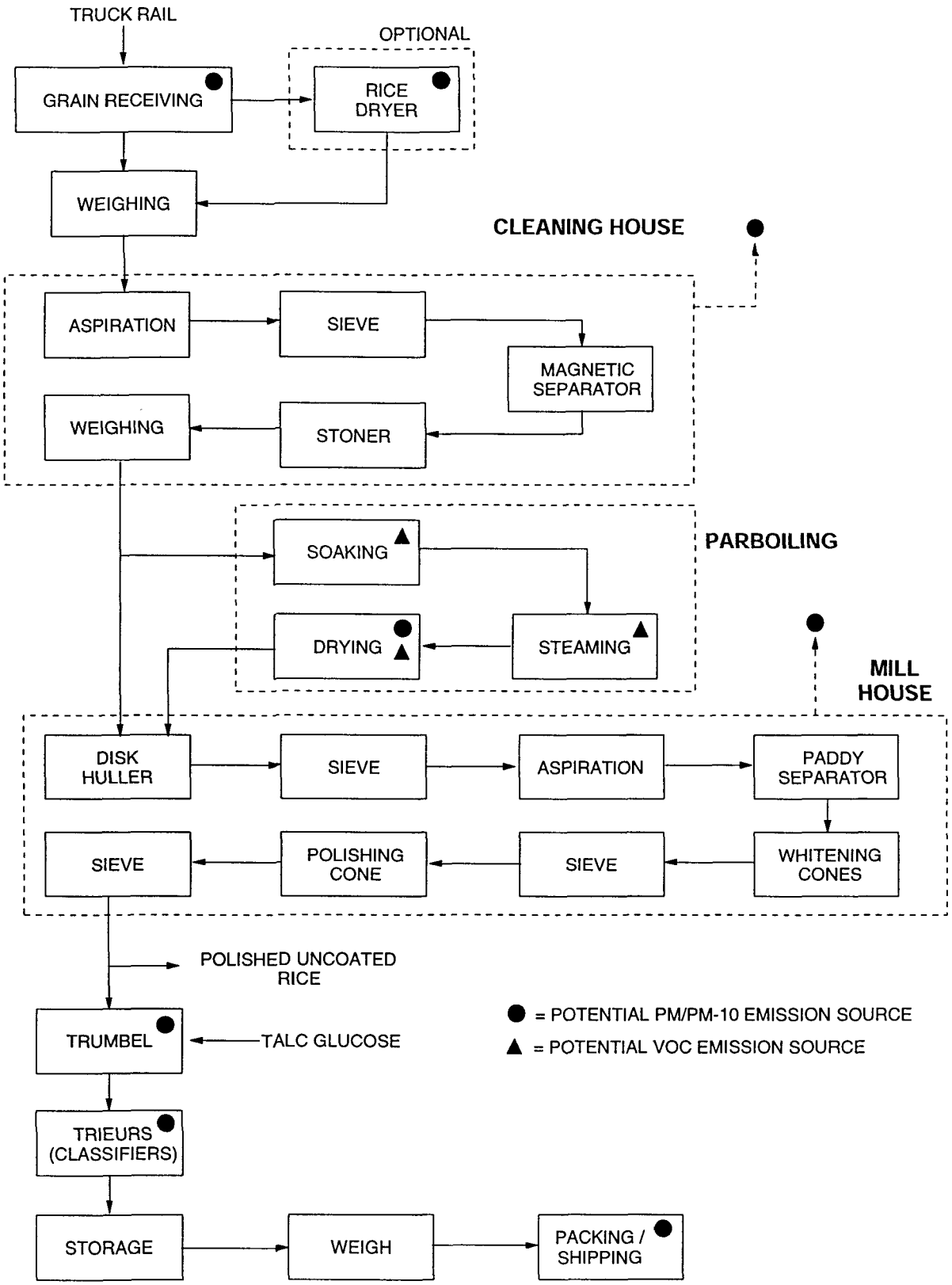

Figure 9.9.1-4. Flow diagram for conventional and parboil rice mills.

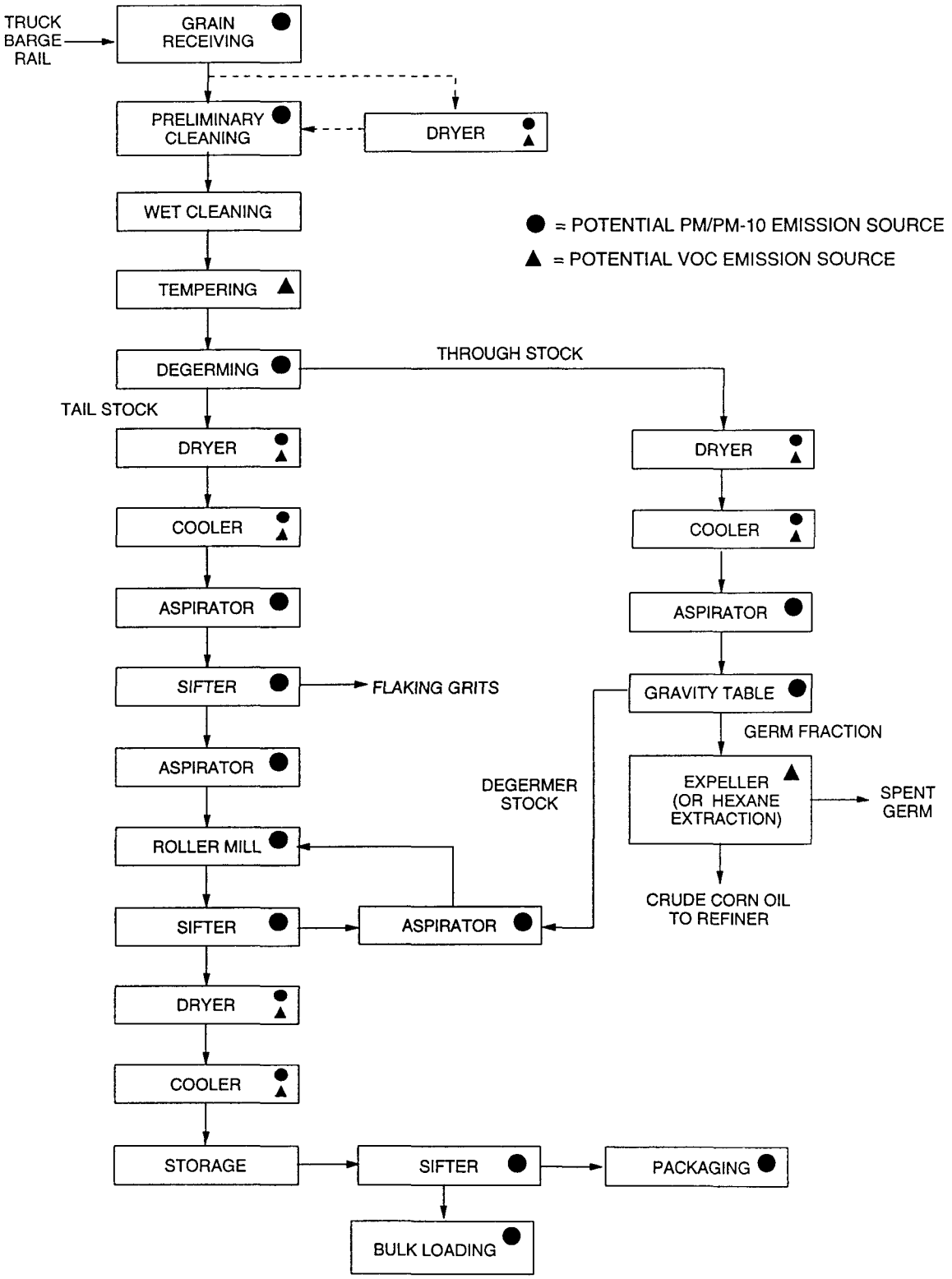

Figure 9.9.1-5. Simplified process flow diagram for a corn dry milling operation with degerming.

conditioning step, which raises the moisture content of the corn to 21 to 25 percent. After tempering, the corn is degermed, typically in a Beall degermer and corn huller. The Beall degermer is essentially an attrition device built in the form of a cone mill. The product exits in two streams, thru-stock and tail stock. Rotary steam-tube dryers are often used to dry the degermer product, because its moisture content must be in the 15 to 18 percent range for proper milling. After drying, the product is cooled to 32° to 37°C (90° to 100°F). After drying and cooling, the degermer stock is sifted or classified by particle size and is fed into the conventional milling system.

The milling section in a dry corn mill consists of sifting, classifying, milling, purifying, aspirating, and possibly, final drying operations. The feed to each pair of rolls consists of selected mill streams produced during the steps of sifting, aspirating, roller milling, and gravity table separating. For the production of specific products, various streams are withdrawn at appropriate points in the milling process. A number of process streams are often blended to produce a specific product. The finished products are stored temporarily in working bins, dried and cooled if necessary, and rebolted (sifted) before packaging or shipping in bulk.

Oil is recovered from the germ fraction either by mechanical screw presses or by a combination of screw presses and solvent extraction. A more detailed discussion of the corn oil extraction process is included in AP-42 Section 9.11.1, Vegetable Oil Processing.

9.9.1.1.5 Animal Feed Mills[2,5,14] -

The manufacture of feed begins with receiving of ingredients at the mill. A simplified flow diagram of the animal feed manufacturing process is shown in Figure 9.9.1-6. Over 200 ingredients may be used in feed manufacture, including grain, byproducts (e.g., meat meal, bone meal, beet and tomato pulp), and medicinals, vitamins, and minerals (used in very small portions). Grain is usually received at the mill by hopper bottom truck and/or rail cars, or in some cases, by barge. Most mills pass selected feed ingredients, primarily grains, through cleaning equipment prior to storage. Cleaning equipment includes scalpers to remove coarse materials before they reach the mixer. Separators, which perform a similar function, often consist of reciprocating sieves that separate grains of different sizes and textures. Magnets are installed ahead of the grinders and at other critical locations in the mill system to remove pieces of metal, bits of wire, and other foreign metallic matter, which could harm machinery and contaminate the finished feed. From the cleaning operation, the ingredients are directed to storage.

Upon removal from storage, the grain is transferred to the grinding area, where selected whole grains, primarily corn, are ground prior to mixing with other feed components. The hammermill is the most widely used grinding device. The pulverized material is forced out of the mill chamber when it is ground finely enough to pass through the perforations in the mill screen.

Mixing is the most important process in feed milling and is normally a batch process. Ingredients are weighed on bench or hopper scales before mixing. Mixers may be horizontal or vertical type, using either screws or paddles to move the ingredients. The material leaving the mixer is meal, or mash, and may be marketed in this form. If pellets are to be made, the meal is conditioned with steam prior to being pelleted.

Pelleting is a process in which the conditioned meal is forced through dies. Pellets are usually 3.2 to 19 mm (1/8 to 3/4 in.) in diameter. After pelleting, pellets are dried and cooled in pellet coolers. If pellets are to be reduced in size, they are passed through a crumbler, or granulator. This machine is a roller mill with corrugated rolls. Crumbles must be screened to remove fines and oversized materials. The product is sent to storage bins and then bagged or shipped in bulk.

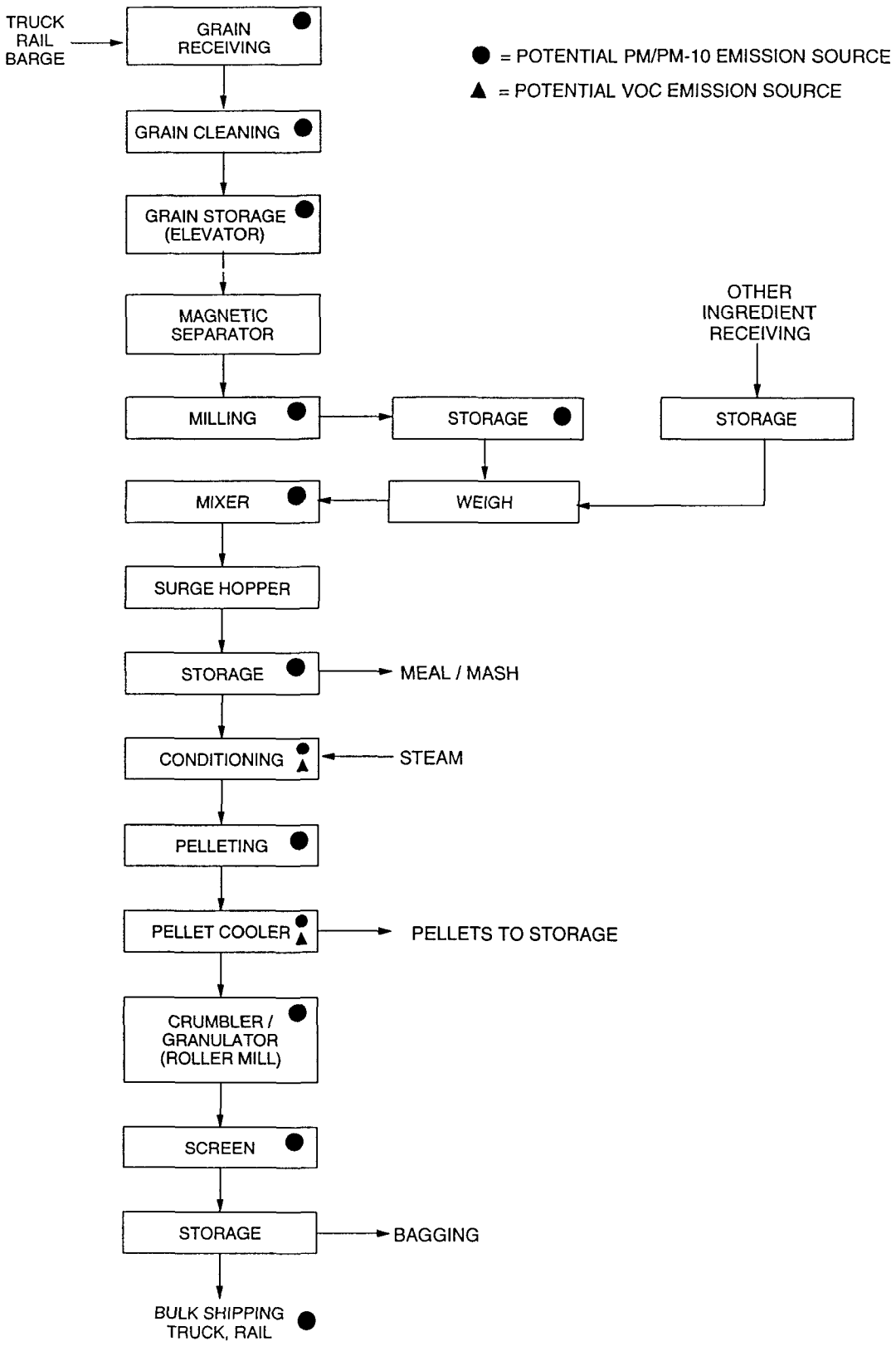

Figure 9.9.1-6. Typical animal feed milling process flow diagram.

In modern feed mills, transport equipment is connected with closed spouting and turnheads, covered drag and screw conveyors, and tightly sealed transitions between adjoining equipment to reduce internal dust loss and consequent housekeeping costs. Also many older facilities have upgraded to these closed systems.

9.9.1.1.6 Malted Barley Production[36-37] -

Barley is shipped by railcar or truck to malting facilities. A screw conveyor or bucket elevator typically transports barley to storage silos or to the cleaning and sizing operations. The barley is cleaned and separated by size (using screens) and is then transferred to a malthouse where it is rinsed in steeping tanks (steeped) and is allowed to germinate. Following steeping and germination, "green" malt is dried, typically in an indirect-, natural gas-fired malt kiln. Malt kilns typically include multiple levels, called beds or layers. For a two-level kiln, green malt, with a moisture content of about 45 percent, enters the upper deck of the kiln and is dried, over a 24-hour period, to between 15 and 20 percent. The barley is then transferred to the lower deck of the kiln, where it is dried to about 4 percent over a second 24-hour period. Some facilities burn sulfur in a sulfur stove and exhaust the stove into the kiln at selected times during the kiln cycle. The sulfur dioxide serves as a fungicide, bactericide, and preservative. Malted barley is then transferred by screw conveyor to a storage elevator until it is shipped.

9.9.1.2 Emissions And Controls[2,5,14-39]

The main pollutant of concern in grain storage, handling, and processing facilities is particulate matter (PM). Organic emissions (e.g., hexane) from certain operations at corn oil extraction facilities may also be significant. These organic emissions (and related emissions from soybean and other oilseed processing) are discussed in AP-42 Section 9.11.1. Also, direct fired grain drying operations and product dryers in grain processing plants may emit small quantities of VOC's and other combustion products; no data are currently available to quantify the emission of these pollutants. The following sections focus primarily on PM sources at grain elevators and grain milling/processing facilities.

9.9.1.2.1 Grain Elevators -

Except for barge and ship unloading and loading activities, the same basic operations take place at country elevators as at terminal elevators, only on a smaller scale and with a slower rate of grain movement. Emission factors for various grain elevator operations are presented later in this subsection. Because PM emissions at both types of elevators are similar, they will be discussed together in this subsection.

In trying to characterize emissions and evaluate control alternatives, potential PM emission sources can be classified into three groups. The first group includes external emission sources (grain receiving and grain shipping), which are characterized by direct release of PM from the operations to the atmosphere. These operations are typically conducted outside elevator enclosures or within partial enclosures, and emissions are quickly dispersed by wind currents around the elevator. The second group of sources are process emission sources that may or may not be vented to the atmosphere and include grain cleaning and headhouse and internal handling operations (e.g., garner and scale bins, elevator legs, and transfer points such as the distributor and gallery and tunnel belts). These operations are typically located inside the elevator structure. Dust may be released directly from these operations to the internal elevator environment, or aspiration systems may be used to collect dust generated from these operations to improve internal housekeeping. If aspiration systems are used, dust is typically collected in a cyclone or fabric filter before the air stream is discharged to the atmosphere. Dust emitted to the internal environment may settle on internal elevator surfaces, but some of the finer particles may be emitted to the environment through doors and windows. For operations not equipped with aspiration systems the quantity of PM emitted to the atmosphere depends on the tightness of the enclosures around the operation and internal elevator housekeeping practices. The third group of sources includes those processes that emit PM to the atmosphere in a well-defined exhaust stream (grain drying and storage bin vents). Each of these operations is discussed in the paragraphs below.

The amount of dust emitted during the various grain-handling operations may depend upon the type of grain being handled, the quality or grade of the grain, the moisture content of the grain, the speed of the belt conveyors used to transport the grain, and the extent and efficiency of dust containment systems (i.e., hoods, sheds, etc.) in use at an elevator. Part of the dust liberated during the handling of grain at elevators gets into the grain during the harvesting operation. However, most of these factors have not been studied in sufficient detail to permit the delineation of their relative importance to dust generation rates.

Grain dust emitted from grain elevator handling operations comprises about 70 percent organic material, about 17 percent free silica (silicon dioxide), and specific materials in the dust, which may include particles of grain kernels, spores of smuts and molds, insect debris, pollens, and field dust. Data recently collected on worker exposure to grain dust indicate that the characteristics of the dust released from processing operations to the internal elevator environment vary widely.[15] The fraction of respirable dust (i.e., those dust particles equal to or less than 10 μm in diameter) ranged from about 1 percent to over 60 percent with an average of 20 and 26 percent for country and export elevators respectively. Those elevators handling primarily wheat had an average respirable fraction of about 30 percent while those handling primarily corn and soybeans had an average respirable fraction of slightly less than 20 percent. Because these dusts have a high organic content and a substantial suspendible fraction, concentrations above the minimum explosive concentration (MEC) pose an explosion hazard. Housekeeping practices instituted by the industry have reduced explosion hazards, and this situation is rarely encountered in work areas.

Elevators in the United States receive grain by truck, railroad hopper car, and barge. The two principal factors that contribute to dust generation during bulk unloading are wind currents and dust generated when a falling stream of grain strikes the receiving pit. Falling or moving streams of grain initiate a column of air moving in the same direction. Grain unloading is an intermittent source of dust occurring only when a truck or car is unloaded. For country elevators it is a significant source during the harvest season and declines sharply or is nonexistent during other parts of the year. At terminal elevators, however, unloading is a year-round operation.

Trucks, except for the hopper (gondola) type, are generally unloaded by the use of some type of truck dumping platform. Hopper trucks discharge through the bottom of the trailer. Elevators are often designed with the truck unloading dump located in a drive-through tunnel. These drive-through areas are sometimes equipped with a roll-down door on one end, although, more commonly they are open at both ends so that the trucks can enter and leave as rapidly as possible. The drive-through access can act as a "wind-tunnel" in that the air may blow through the unloading area at speeds greater than the wind in the open areas away from the elevator. However, the orientation of the facility to the prevailing wind direction can moderate this effect. Many facilities have installed either roll-down or bi-fold doors to eliminate this effect. The use of these doors can greatly reduce the "wind tunnel" effect and enhance the ability to contain and capture the dust.

The unloading pit at a grain elevator usually consists of a heavy grate approximately 3.05 m x 3.05 m (10 ft x 10 ft) through which the grain passes as it falls into the receiving pit. This pit will often be partially filled with grain as the truck unloads because the conveyor beneath the pit does not carry off the grain as fast as it enters. The dust-laden air emitted by the truck unloading operation results from displacement of air out of the pit plus the aspiration of air caused by the falling stream of grain. The dust itself is composed of field dirt and grain particles. Unloading grain from hopper trucks with choke flow-practices can provide a substantial reduction in dust emissions.

Similarly, a hopper railcar can be unloaded with minimal dust generation if the material is allowed to form a cone around the receiving grate (i.e., choke feed to the receiving pit). This situation will occur when either the receiving pit or the conveying system serving the pit are undersized in comparison to the rate at which material can be unloaded from the hopper car. In such cases, dust is generated primarily during the

initial stage of unloading, prior to establishment of the choked-feed conditions. Dust generated by wind currents can be minimized by the use of a shed enclosed on two sides with a manual or motorized door on one end or a shroud around the hopper discharge.

In most cases, barges are unloaded by means of a retractable bucket type elevator that is lowered into the hold of the barge. There is some generation of dust in the hold as the grain is removed and also at the top of the leg where the grain is discharged onto the transfer belt. This latter source is more appropriately designated a transfer point.

The loadout of grain from elevators into railcar, truck, barge, or ship is another important source of PM emissions and is difficult to control. Gravity is usually used to load grain from bins above the loading station or from the scale in the headhouse. The main causes of dust emissions when loading bulk grain by gravity into trucks or railcars is the wind blowing through the loading sheds and dust generated when the falling stream of grain strikes the truck or railcar hopper. The grain leaving the loading spout is often traveling at relatively high velocity and librates a considerable amount of dust as the grain is deposited in the car or truck. Dust emitted during loading of barges and ships can be at least equal to, or maybe greater than, PM generated during loading of trucks or railcars. The openings for the holds in these vessels are large, making it very hard to effectively capture the emissions. The use of deadboxes, aspiration, socks, tents, or other means are often used to reduce dust emissions.

Grain dryers present a difficult problem for air pollution control because of the large volumes of air exhausted from the dryer, the large cross-sectional area of the exhaust, the low specific gravity of the emitted dust, and the high moisture content of the exhaust stream. The rate of emission of PM from grain dryers is primarily dependent upon the type of grain, the dustiness of the grain, and the dryer configuration (rack or column type). The particles emitted from the dryers, although relatively large, may be very light and difficult to collect. However, during corn drying the characteristic "bees wing" is emitted along with normal grain dust. "Bees wing," a light flaky material that breaks off from the corn kernel during drying and handling, is a troublesome PM emission. Essentially, all bees wing emissions are over 50 μm in diameter, and the mass mean diameter is probably in the region of 150 μm. In addition to the bees wings, the dust discharged from grain dryers consists of hulls, cracked grain, weed seeds, and field dust. Effluent from a corn dryer may consist of 25 percent bees wing, which has a specific gravity of about 0.70 to 1.2. Approximately 95 percent of the grain dust is larger than 50 μm.[2]

Cross-flow column dryers have a lower emission rate than rack dryers because some of the dust is trapped by the column of grain. In order to control the dust emitted from the columns, it is necessary to build an enclosure. This enclosure also serves as a relatively inefficient settling chamber. New grain dryers being sold today do not require the use of enclosures. In rack dryers, the emission rate is higher because the turning motion of the grain generates more bees wings and the design facilitates dust escape. Some rack dryers are exhausted only from one or two points and are thus better suited for control device installation. The EPA's New Source Performance Standards (NSPS) for grain elevators established visible emission limits for grain dryers by requiring 0 percent opacity for emissions from column dryers with column plate perforations not to exceed 2.4 mm diameter (0.094 in.) or rack dryers with a screen filter not to exceed 50 mesh openings.

Equipment used to clean grain varies from simple screening devices to aspiration-type cleaners. Both types of systems potentially generate substantial quantities of PM depending on the design and extent of enclosure.

Both country and terminal elevators are usually equipped with garner and scale bins for weighing of grain. A country elevator may have only one garner bin and scale bin. However, a terminal elevator has multiple scale and garner bin systems, each with a capacity ranging from 42.3 to 88.1 m^3 (1,200 to 2,500 bu)

to process 1,233 to 2,643 m^3/hr (35,000 to 75,000 bu/hr). Dust may be emitted from both the scale and garner bin whenever grain is admitted. The incoming stream of grain displaces air from the bin, and the displaced air entrains dust. The potential for emissions depends on the design of the system. For example, some facilities employ a relief duct that connects the two pieces of equipment to provide a path for displaced air. Also, in some cases, the bins are completely open at the top while some systems are completely enclosed.

The leg may be aspirated to remove dust created by the motion of the buckets and the grain flow. A variety of techniques are used to aspirate elevator legs. For example, some are aspirated at both the top and bottom; others are fitted with ducting from the top to the bottom in order to equalize the pressure, sometimes including a small blower to serve this purpose. The collected dust is discharged to a cyclone or filter. Leg vents may emit small amounts of dust under some operating conditions. However, these vents are often capped or sealed to prevent dust emissions. The sealing or capping of the vent is designed to act as an explosion relief vent after a certain internal pressure is reached to prevent damage to the equipment.

When grain is handled, the kernels scrape and strike against each other and the conveying medium. This action tends to rub off small particles of chaff and to fragment some kernels. Dust is continuously generated, and the grain is never absolutely clean. Belt conveyors have less rubbing friction than either screw or drag conveyors, and therefore, generate less dust. Dust emissions usually occur at belt transfer points as materials fall onto or away from a belt. Belt speed has a strong effect on dust generation at transfer points. Examples of transfer points are the discharge from one belt conveyor or the discharge from a bin onto a tunnel belt.

Storage bin vents, which are small screen-covered openings located at the top of the storage bins, are used to vent air from the bins as the grain enters. The grain flow into a bin induces a flow of air with the grain, and the grain also displaces air out of the bin. The air pressure that would be created by these mechanisms is relieved through the vents. The flow of grain into the bin generates dust that may be carried out with the flow of air through the bin vents. The quantity of dust released through the vents increases as the level of the grain in the bin increases. Bin vents are common to both country and terminal elevators, although the quantity of dust emitted is a function of the grain handling rate, which is considerably higher in terminal elevators.

The three general types of measures that are available to reduce emissions from grain handling and processing operations are process modifications designed to prevent or inhibit emissions, capture/ collection systems, and oil suppression systems that inhibit release of dust from the grain streams. The following paragraphs describe the general approaches to process controls, capture systems, and oil suppression. The characteristics of the collection systems most frequently applied to grain handling and processing plants (cyclones and fabric filters) are then described, and common operation and maintenance problems found in the industry are discussed.

Because emissions from grain handling operations are generated as a consequence of mechanical energy imparted to the dust by the operations themselves and local air currents in the vicinity of the operations, an obvious control strategy is to modify the process or facility to limit the effects of those factors that generate emissions. The primary preventive measures that facilities have used are construction and sealing practices that limit the effect of air currents and minimizing grain free fall distances and grain velocities during handling and transfer. Some construction and sealing practices that minimize emissions are enclosing the receiving area to the degree practicable, preferably with doors at both ends of a receiving shed; specifying dust-tight cleaning and processing equipment; using lip-type shaft seals at bearings on conveyor

and other equipment housings; using flanged inlets and outlets on all spouting, transitions, and miscellaneous hoppers; and fully enclosing and sealing all areas in contact with products handled.

A substantial reduction in emissions from receiving, shipping, handling, and transfer areas can be achieved by reducing grain free fall distances and grain velocities. Choke unloading reduces free fall distance during hopper car unloading. The same principle can be used to control emissions from grain transfer onto conveyor belts and from loadout operations. An example of a mechanism that is used to reduce grain velocities is a "dead box" spout, which is used in grain loadout (shipping) operations. The dead box spout slows down the flow of grain and stops the grain in an enclosed area. The dead box is mounted on a telescoping spout to keep it close to the grain pile during operation. In principle, the grain free falls down the spout to an enclosed impact dead box, with grain velocity going to zero. It then falls onto the grain pile. Typically, the entrained air and dust liberated at the dead box is aspirated back up the spout to a dust collector. Finally, several different types of devices are available that, when added to the end of the spout, slow the grain flow and compress the grain discharge stream. These systems entrap the dust in the grain stream, thereby providing a theoretical reduction in PM emissions. There are few, if any, test data from actual ship or barge loading operations to substantiate this theoretical reduction in emissions.

While the preventive measures described above can minimize emissions, most facilities also require ventilation, or capture/collection, systems to reduce emissions to acceptable levels. In fact, air aspiration (ventilation) is a part of the dead box system described above. Almost all grain handling and processing facilities, except relatively small grain elevators, use capture/collection on the receiving pits, cleaning operations, and elevator legs. Generally, milling and pelletizing operations at processing plants are ventilated, and some facilities use hooding systems on all handling and transfer operations.

Grain elevators that rely primarily on aspiration typically duct many of the individual dust sources to a common dust collector system, particularly for dust sources in the headhouse. Thus, aspiration systems serving elevator legs, transfer points, bin vents, etc., may all be ducted to one collector in one elevator and to two or more individual systems in another. Because of the myriad possibilities for ducting, it is nearly impossible to characterize a "typical" grain elevator from the standpoint of delineating the exact number and types of air pollution sources and the control configurations for those sources.

The control devices typically used in the grain handling and processing industry are cyclones (or mechanical collectors) and fabric filters. Cyclones are generally used only on country elevators and small processing plants located in sparsely populated areas. Terminal elevators and processing plants located in densely populated areas, as well as some country elevators and small processing plants, normally use fabric filters for control. Both of these systems can achieve acceptable levels of control for many grain handling and processing sources. Although cyclone collectors can achieve acceptable performance in some scenarios, and fabric filters are highly efficient, both devices are subject to failure if they are not properly operated and maintained. Also, malfunction of the ventilation system can lead to increased emissions at the source.

The emission control methods described above rely on either process modifications to reduce dust generation or capture collection systems to control dust emissions after they are generated. An alternative control measure that has developed over the last 10 years is dust suppression by oil application. The driving forces for developing most such dust suppression systems have been grain elevator explosion control as well as emission control. Consequently, few data have been published on the amount of emission reduction achieved by such systems. Recent studies, however, have indicated that a PM reduction of approximately 60 to 80 percent may be achievable (see References 57 and 61 in Section 4 of the Background Report).

Generally, these oil application dust suppression systems use either white mineral oil, soybean oil, or some other vegetable oil. Currently the Food and Drug Administration restricts application rates of mineral

oil to 0.02 percent by weight. Laboratory testing and industry experience have shown that oil additives applied at a rate of 60 to 200 parts per million by weight of grain, or 0.5 to 1.7 gallons of oil per thousand bushels of grain can provide effective dust control.[39] The effectiveness of the oil suppression system depends to some extent on how well the oil is dispersed within the grain stream after it is applied. Several options are available for applying oil additives.

1. As a top dressing before grain enters the bucket elevator or at other grain transfer points.
2. From below the grain stream at a grain transfer point using one or more spray nozzles.
3. In the boot of the bucket elevator leg.
4. At the discharge point from a receiving pit onto a belt or other type conveyor.
5. In a screw conveyor.

9.9.1.2.2 Grain Processing Plants -

Several grain milling operations, such as receiving, conveying, cleaning, and drying, are similar to those at grain elevators. In addition, applications of various types of grinding operations to the grain, grain products, or byproducts are further sources of emissions. The hammermill is the most widely used grinding device at feed mills. Some product is recovered from the hammermill with a cyclone collector or baghouse. Mills, similar to elevators, use a combination of cyclones and fabric filters to conserve product and to control emissions. Several types of dryers are used in mills, including the traditional rack or column dryers, fluidized bed dryers (soybean processing), and flash-fired or direct-fired dryers (corn milling). These newer dryer types might have lower emissions, but data are insufficient at this time to quantify the difference. The grain precleaning often performed before drying also likely serves to reduce emissions.

Because of the operational similarities, emission control methods used in grain milling and processing plants are similar to those in grain elevators. Cyclones or fabric filters are often used to control emissions from the grain handling operations (e. g., unloading, legs, cleaners, etc.) and also from other processing operations. Fabric filters are used extensively in flour mills. However, certain operations within milling operations are not amenable to the use of these devices and alternatives are needed. Wet scrubbers, for example, are applied where the effluent gas stream has a high moisture content. A few operations have been found to be difficult to control by any method. Various emission control systems have been applied to operations within the grain milling and processing industry.[2]

Grain processing facilities also have the potential to emit gaseous pollutants. Natural gas-fired dryers and boilers are potential sources of combustion byproducts and VOC. The production of various modified starches has the potential for emissions of hydrochloric acid or ethylene oxide. However, no data are available to confirm or quantify the presence of these potential emissions. Neither are there any data available concerning the control of these potential emissions.

Table 9.9.1-1 presents emission factors for filterable PM and PM-10 emissions from grain elevators. Table 9.9.1-2 presents emission factors for filterable PM; PM-10; inorganic, organic and total condensible PM emissions from grain processing facilities.

The most recent source test data for grain elevators either does not differentiate between country and inland terminal elevators or does not show any significant difference in emission factors between these two types of elevators. There are no current emission source test data for export terminal elevators. Because there is no significant difference in emission factors between different types of elevators, the emission factors presented in Table 9.9.1-1 are for grain elevators, without any distinction between elevator types.

Table 9.9.1-1. PARTICULATE EMISSION FACTORS FOR GRAIN ELEVATORS[a]

Emission Source	Type of Control	Filterable[b]			
		PM	EMISSION FACTOR RATING	PM-10[c]	EMISSION FACTOR RATING
Grain receiving (SCC 3-02-005-05)					
Trucks (unspecified) (SCC 3-02-005-50)	None	ND		ND	
Straight truck (SCC 3-02-005-51)	None	0.18[d]	E	0.059[e]	E
Hopper truck (SCC 3-02-005-52)	None	0.035[d]	E	0.0078[e]	E
Railcar (SCC 3-02-005-53)	None	0.032[e]	E	0.0078[e]	E
Barge (SCC 3-02-005-54)	None	(f)		(f)	
Ships (SCC 3-02-005-55)	None	(f)		(f)	
Grain cleaning (SCC 3-02-005-03)					
Internal vibrating (SCC 3-02-005-37)	Cyclone	0.075[g]	E	(j)	
Stationary enclosed (SCC 3-02-005-38)	None	ND		ND	
Grain drying (SCC 3-02-005-04)					
Column dryer (SCC 3-02-005-27)	None	0.22[h]	E	(j)	
Rack dryer (SCC 3-02-005-28)	None	3.0[h]	E	(j)	
	Self-cleaning screens (<50 mesh)	0.47[h]	E	(j)	
Headhouse and internal handling (SCC 3-02-005-30) (legs, belts, distributor, scale, etc.)	None	0.061[e]	E	0.034[e]	E
Storage bin (vent) (SCC 3-02-005-40)	None	ND		ND	

Table 9.9.1-1 (cont.).

Emission Source	Type of Control	Filterable[b]			
		PM	EMISSION FACTOR RATING	PM-10[c]	EMISSION FACTOR RATING
Grain shipping (SCC 3-02-005-06)					
Truck (unspecified) (SCC 3-02-005-60)	None	0.086[d]	E	0.029[e]	E
Railcar (SCC 3-02-005-63)	None	0.027[e]	E	0.0022[e]	E
Barge (SCC 3-02-005-64)		(f)		(f)	
Ship (SCC 3-02-005-05)		(f)		(f)	

[a] Specific sources of emission factors are cited in Reference 1, Table 4-16 and supporting tables. Factors are in units of lb/ton of grain handled or processed. Lb/ton divided by 2 gives kg/Mg. SCC = Source Classification Code. ND = no data available.
[b] Weight of total filterable PM, regardless of size, per unit weight of grain throughput.
[c] Weight of PM $\leq 10\mu m$ in aerodynamic diameter per unit weight of grain throughput.
[d] Mean of two values from References 18 and 19.
[e] Reference 19.
[f] No data are available that represent current loading and unloading practices for ships and barges.
[g] Mean of six A- and C-rated data points from References 20, 21, 22, 23, and 24.
[h] Mean of two D-rated data points from Reference 2.
[j] PM-10 test data are not available. PM-10 emission factors can be estimated by taking 25 percent of the filterable PM emission factor.

Table 9.9.1-2. PARTICULATE EMISSION FACTORS FOR GRAIN PROCESSING FACILITIES[a]

Type of Facility/ Emission Source	Type of Control	Filterable[b]				Condensible PM[c]			
		PM	EMISSION FACTOR RATING	PM-10[d]	EMISSION FACTOR RATING	Inorganic	Organic	Total	EMISSION FACTOR RATING
Animal feed mills									
Grain receiving (SCC 3-02-008-02)	None	0.017[e]	E	0.0025[e]	E				
Grain cleaning (SCC 3-02-008-07)	Cyclone	(f)		(f)					
Storage	None	ND		ND					
Grain milling (SCC 3-02-008-15)									
Hammermill (SCC 3-02-008-17)	Cyclone	0.067[h]	E	(g)					
	Baghouse	0.012[j]	E	(y)					
Flaker (SCC 3-02-008-18)	Cyclone	0.15[k]	E	(g)					
Grain cracker (SCC 3-02-008-19)	Cyclone	0.024[k]	E	(g)					
Mixer	None	ND		ND					
Conditioning	None	ND		ND					
Pelletizing Pellet cooler[m] (SCC 3-02-008-16)	Cyclone	0.36[n]	E	(g)		--	--	0.059[p]	E
	High efficiency cyclone[r]	0.15[q]	E	(g)					
Feed shipping (SCC 3-02-008-03)	None	0.0033[e]	E	0.0008[e]	E				
Wheat flour mills									
Grain receiving (SCC 3-02-007-31)	None	(f)		(f)					
Grain handling (SCC 3-02-007-32) (legs, belts, etc.)	None	(f)		(f)					

Table 9.9.1-2 (cont.).

Type of Facility/ Emission Source	Type of Control	Filterable[b]				Condensible PM[c]			
		PM	EMISSION FACTOR RATING	PM-10[d]	EMISSION FACTOR RATING	Inorganic	Organic	Total	EMISSION FACTOR RATING
Cleaning house separators (SCC 3-02-007-33)	Cyclone	0.012[s]	E	(g)					
Wheat milling (SCC 3-02-007-34) (roller mill)	None	70[s]	E	(g)					
Bulk loading		ND		ND					
Corn dry mills									
Grain receiving (SCC 3-02-007-41)	None	(f)		(f)					
Grain drying (SCC 3-02-007-42)	None	(f)		(f)					
Grain handling (SCC 3-02-007-43) (legs, belts, etc.)	None	(f)		(f)					
Grain cleaning (SCC 3-02-007-44)	None	(f)		(f)					
Degermer/milling (SCC 3-02-007-45)		ND		ND					
Bulk loading		ND		ND					
Rice Mills									
Grain receiving (SCC 3-02-007-71)	None	ND		ND					
Precleaning/handling (SCC 3-02-007-72)		ND		ND					
Rice drying (SCC 3-02-007-73)	None	0.063[t]	E	(g)					
Cleaning house (SCC 3-02-007-74)		ND		ND					

Table 9.9.1-2 (cont.).

Type of Facility/ Emission Source	Type of Control	Filterable[b]				Condensible PM[c]			
		PM	EMISSION FACTOR RATING	PM-10[d]	EMISSION FACTOR RATING	Inorganic	Organic	Total	EMISSION FACTOR RATING
Parboiling	None	ND		ND					
Mill house (SCC 3-02-007-76)	Fabric filter	0.27[u]	E	(y)					
Paddy cleaner (SCC 3-02-007-75)	Fabric filter	0.0031[u]	E	(y)					
Aspirator (SCC 3-02-007-77)	Fabric filter	0.0030[u]	E	(y)					
Bran handling (SCC 3-02-007-78)	Fabric filter	0.017[u]	E	(y)					
Trumbel	None	ND		ND					
Trieurs	None	ND		ND					
Packaging/Shipping		ND		ND					
Durum Mills									
Grain receiving (SCC 3-02-007-11)		(f)		(f)					
Grain precleaning/ handling (SCC 3-02-007-12)		ND		ND					
Cleaning house (SCC 3-02-007-13)		ND		ND					
Durum milling (SCC 3-02-007-14)		ND		ND					
Bulk loading		ND		ND					

Table 9.9.1-2 (cont.).

Type of Facility/ Emission Source	Type of Control	Filterable[b]				Condensible PM[c]			
		PM	EMISSION FACTOR RATING	PM-10[d]	EMISSION FACTOR RATING	Inorganic	Organic	Total	EMISSION FACTOR RATING
Rye Mills									
Grain receiving (SCC 3-02-007-21)		(f)		(f)					
Grain precleaning/ handling (SCC 3-02-007-22)		(f)		(f)					
Cleaning house (SCC 3-02-007-23)		ND		ND					
Rye milling (SCC 3-02-007-24)		ND		ND					
Bulk loading		ND		ND					
Oat Mills (SCC 3-02-007-60)									
Grain receiving		(f)		(f)					
Grain cleaning		(f)		(f)					
Separators		ND		ND					
Drying/cooling		ND		ND					
Grading/sizing		ND		ND					
Hulling		ND		ND					
Cutting		ND		ND					
Steaming/conditioning		ND		ND					
Flaking		ND		ND					
Screening		ND		ND					
Packaging		ND		ND					

Table 9.9.1-2 (cont.).

Type of Facility/ Emission Source	Type of Control	Filterable[b]				Condensible PM[c]			
		PM	EMISSION FACTOR RATING	PM-10[d]	EMISSION FACTOR RATING	Inorganic	Organic	Total	EMISSION FACTOR RATING
Barley Malting									
Grain receiving (SCC 3-02-007-08)	Fabric filter	0.016[v]	E	(y)					
Gas-fired malt kiln (SCC 3-02-007-09)	None	0.19[w]	E	0.17[x] (PM-2.5 =0.075)	E	0.075[x]	0.013[x]	0.088[x]	E

[a] Specific sources of emission factors are cited in Reference 1, Table 4-17 and supporting tables. Factors are in unit of lb/ton of grain handled or processed. Lb/ton divided by 2 gives kg/Mg. SCC = Source Classification Code. ND = no data available.
[b] Weight of total filterable PM, regardless of size, per unit weight of grain throughput.
[c] Condensible PM is material collected in the impinger portion of a PM sampling train.
[d] Weight of PM ≤ 10μm in aerodynamic diameter per unit weight of grain throughput.
[e] Reference 38. Feed shipping emission factor based on data for loading of bulk feed (not pellets).
[f] See emission factors for grain elevators, Table 9.9.1-1.
[g] PM-10 test data are not available. PM-10 emission factors can be estimated by taking 50 percent of the filterable PM emission factor.
[h] Mean of two values from References 26 and 27.
[j] Mean of two B-rated values from References 28, 29, and 30.
[k] Reference 31.
[m] Includes column and pan dryers.
[n] Mean of 11 A-, B-, and C-rated values from References 26, 27, 31, and 32.
[p] Mean of three B- and C-rated values from References 26 and 32.
[q] Mean of two B-rated values from References 29, 30, and 31.
[r] Equivalent to triple cycle or modern high efficiency cyclone.
[s] Reference 2.
[t] Mean of five D-rated values from Reference 34.
[u] Reference 35.
[v] Reference 36.
[w] Mean of two values from References 36 and 37. Value converted from bushels to tons using a conversion factor of 50 bu/ton.
[x] Reference 37.
[y] PM-10 test data are not available. PM-10 emission factors can be estimated by taking 100 percent of the filterable PM emission factor.

In Tables 9.9.1-1 and 9.9.1-2, a number of potential emission sources are presented for each type of facility. The number and type of processes that occur within a specific elevator or grain processing plant will vary considerably from one facility to another. The total emissions from a specific facility will be dependent upon the different types of processes and the number of times a process or operation occurs within each facility. Not all processes occur at every facility; therefore, the specific emission sources and number of sources must be determined for each individual facility. It is not appropriate to sum emission factors for all sources and assume that total factor for all facilities.

References For Section 9.9.1

1. *Emission Factor Documentation For AP-42 Section 9.9.1, Grain Elevators And Processing Plants*, Contract No. 68-D2-0159 and Purchase Order No. 8D-1993-NANX, Midwest Research Institute, Cary, NC, March 1998.

2. L. J. Shannon, *et al.*, *Emissions Control In The Grain And Feed Industry, Volume I—Engineering And Cost Study*, EPA-450/3-73-003a, U. S. Environmental Protection Agency, Research Triangle Park, NC, December 1973.

3. V. Ramanthan and D. Wallace, *Review Of Compliance Monitoring Programs With Respect To Gain Elevators*, Final Report, EPA Contract 68-01-4139, Tasks 12 and 14, Midwest Research Institute, March 1980.

4. G. A. LaFlam, *Emission Factor Documentation For AP-42 Section 6.9.1, Grain Elevators And Processing Plants*, Pacific Environmental Services Inc., Durham, NC, September 1987.

5. D. Wallace, *Grain Handling And Processing*, Part of Chapter 13, "Food And Agricultural Industry", in *Air Pollution Engineering Manual*, Van Nostrand Reinhold, NY, 1992.

6. Letter from Thomas C. O'Connor, National Grain and Feed Association, to Dallas Safriet, U. S. Environmental Protection Agency, Research Triangle Park, NC. November 24, 1993.

7. Francis H. Webster, *Oats: Chemistry And Technology*, American Association Of Cereal Chemists, St. Paul, MN, 1986.

8. Bienvenido O. Juliano, *Rice Chemistry And Technology*, American Association Of Cereal Chemists, St. Paul, MN, 1985.

9. Bor S. Luk, *Rice*, Volume I, Production, Second Edition, Van Nostrand Reinhold, New York, NY, 1991.

10. Bor S. Luk, *Rice*, Volume II, Utilization, Second Edition, Van Nostrand Reinhold, New York, NY, 1991.

11. Samuel R. Aldrich, Walter O. Scott, and Robert G. Hoeft, *Modern Corn Production*, Third Edition, A. & L. Publications, Champaign, IL, 1986.

12. G. F. Spraque and J. W. Dudgley, *Corn And Corn Improvement*, Third Edition, American Society Of Agronomy, Inc., Crop Science Society Of America, Inc., and Soil Science Society Of America, Inc., Madison, WI, 1988.

13. S. A. Watson and P. E. Ramstad, *Corn Chemistry And Technology*, American Association Of Cereal Chemists, Inc., St. Paul, MN, 1987.

14. R. R. McElhiney, *Feed Manufacturing Technology III*, American Feed Manufacturers Association, Arlington, VA, 1985.

15. Health and Hygiene, Inc., *Worker Exposure To Dust In The Grain Industry*, Unpublished report for the National Grain And Feed Association, Washington, DC, September 1991.

16. *Tests Of Oil Suppression Of PM-10 At Grain Elevators*, Test Report, Midwest Research Institute, Kansas City, MO, November 1994.

17. F. S. Lai, et al., *Examining The Use Of Additives To Control Grain Dust*, Final Report To The National Grain And Feed Association, Washington, DC, June 1982.

18. P. Kenkel and R. Noyes, "Grain Elevator Dust Emission Study", Oklahoma State University, Stillwater, OK, October 21, 1994 and "Clarifying Response To MRI Report On OSU Dust Emission Study", Oklahoma State University, Stillwater, OK, February 13, 1995.

19. *Emission Factors For Grain Elevators*, Final Report to National Grain and Feed Foundation, Midwest Research Institute, Kansas City, Missouri, January, 1997.

20. F. J. Belgea, *Dust Control Systems Performance Test*, Pollution Curbs, Inc., St. Paul, Minnesota, July 15, 1976.

21. A. L. Trowbridge, *Particulate Emissions Testing*, ERC Report No. 4-7683, Environmental Research Corporation, St. Paul, MN, January 16, 1976.

22. C. S. Hulburt, *Particulate Emissions Evaluation And Performance Test Of The Dust Control Systems At Farmers Coop Elevator In Enderlin, North Dakota*, Pollution Curbs Inc., St. Paul, MN, October 23, 1974.

23. F. J. Belgea, *Grain Handling Dust Collection Systems Evaluation For Farmer's Elevator Company, Minot, North Dakota*, Pollution Curbs Inc., St. Paul, MN, August 28, 1972.

24. F. J. Belgea, *Cyclone Emissions And Efficiency Evaluation*, Pollution Curbs Inc., St. Paul, MN, March 10, 1972.

25. P. Lonnes, *Results Of Particulate Emission Compliance Testing At The Peavey Company In Valley City, North Dakota, Conducted March 16-18, 1977*, Interpoll Inc., St. Paul, MN, April 15, 1977.

26. R. W. Gerstle and R. S. Amick, *Test Number 73-GRN-1, Ralston Purina Company, Louisville, Kentucky*, Final Report, EPA Contract No. 68-02-0237, Task 17, U. S. Environmental Protection Agency, Research Triangle Park, NC, 1972.

27. Environmental Engineering Inc., *Source Test Report On Measurement Of Emissions From Cargill, Inc., Sioux City, Iowa*, Test No. 72-Cl-28(GRN), U. S. Environmental Protection Agency, Research Triangle Park, NC, 1972.

28. W. D. Snowden, *Atmospheric Emission Evaluation, Mayflower Farms Grain And Feed Milling Plant, Portland, Oregon*, Test No. 72-C1-34(GRN), U. S. Environmental Protection Agency, Research Triangle Park, NC, February 8, 1973.

29. *Particulate Emission Testing For Wayne Farms Sandersville, Mississippi*, Air Systems Testing, Inc., Marietta, GA, September 1-2, 1992.

30. *Report Of Particulate Emissions Tests For Wayne Farms Laurel Feed Mill*, Environmental Monitoring Laboratories, Ridgeland, MS, August 29 and September 20, 1994.

31. Written communication from Paul Luther, Purina Mills, Inc., St. Louis, MO, to Greg LaFlam, Pacific Environmental Service Inc., Durham, NC, March 11 and August 28, 1987.

32. *Report Of Particulate Emissions Tests For Stockton Hay And Grain Company*, Environmental Research Group, Inc., Emeryville, CA, September 1983.

33. H. J. Taback, *et al.*, *Fine Particle Emissions From Stationary And Miscellaneous Sources In The South Coast Air Basin, Final Report*, PB-293-923, California Air Resources Board, Sacramento, CA, February 1979.

34. Written communication from W. James Wagoner, Butte County Air Pollution Control Agency, Durham, CA, to Dallas Safriet, U. S. Environmental Protection Agency, Research Triangle Park, NC, October 11, 1993.

35. Thomas Rooney, *Emission Performance Testing Of A Rice Mill*, Western Environmental Services, Redondo Beach, CA, March 1992.

36. H. J. Beaulieu, *Final Report Atmospheric Emission Testing Busch Agricultural Resources, Inc., Idaho Falls Malt Plant*, Industrial Hygiene Resources, Ltd., Boise, Idaho, October, 1991.

37. M. J. Huenink, *Total Particulate Emissions Stack Testing Of The Kiln 6 Operations At Busch Agricultural Resources, Inc., Manitowoc, Wisconsin*, Environmental Technology and Engineering Corp., Elm Grove, Wisconsin, May 8, 1996.

38. *Emission Factors For Grain Receiving And Feed Loading Operations At Feed Mills*, for National Cattleman's Beef Association, Texas A&M University, College Station, Texas, September 17, 1996.

39. Letter from Thomas C. O'Connor, National Grain and Feed Association, to Dallas Safriet, U. S. Environmental Protection Agency, Research Triangle Park, North Carolina, June 30, 1997.

9.9.2 Cereal Breakfast Food

9.9.2.1 General[1]

Breakfast cereal products were originally sold as milled grains of wheat and oats that required further cooking in the home prior to consumption. In this century, due to efforts to reduce the amount of in-home preparation time, breakfast cereal technology has evolved from the simple procedure of milling grains for cereal products that require cooking to the manufacturing of highly sophisticated ready-to-eat products that are convenient and quickly prepared.

9.9.2.2 Process Description[1-3]

Breakfast cereals can be categorized into traditional (hot) cereals that require further cooking or heating before consumption and ready-to-eat (cold) cereals that can be consumed from the box or with the addition of milk. The process descriptions in this section were adapted primarily from reference 3 and represent generic processing steps. Actual processes may vary considerably between plants, even those manufacturing the same type of cereal.

Traditional Cereals –

Traditional cereals are those requiring cooking or heating prior to consumption and are made from oats, farina (wheat), rice, and corn. Almost all (99 percent) of the traditional cereal market are products produced from oats (over 81 percent) and farina (approximately 18 percent). Cereals made from rice, corn (excluding corn grits), and wheat (other than farina) make up less than 1 percent of traditional cereals.

Oat cereals. The three types of oat cereals are old-fashioned oatmeal, quick oatmeal, and instant oatmeal. Old-fashioned oatmeal is made of rolled oat groats (dehulled oat kernels) and is prepared by adding water and boiling for up to 30 minutes. Quick oat cereal consists of thinner flakes made by rolling cut groats and is prepared by cooking for 1 to 15 minutes. Instant oatmeal is similar to quick oats but with additional treatments, such as the incorporation of gum to improve hydration; hot water is added but no other cooking is required. The major steps in the production of traditional oat cereal include grain receiving, cleaning, drying, hulling, groat processing, steaming, and flaking. Figure 9.9.2-1 is a generic process flow diagram for traditional oat cereal production.

Oats arrive at the mill via bulk railcar or truck and are sampled to ensure suitable quality for milling. Once the grain is deemed acceptable, it is passed over a receiving separator to remove coarse and fine material and binned according to milling criteria. Raw grain handling and processing is discussed in AP-42 Section 9.9.1, Grain Elevators and Processes.

Cleaning removes foreign material, such as dust, stems, and weed seeds, and oats that are unsuitable for milling. The cleaning process utilizes several devices to take advantage of particular physical properties of the grain. For example, screens utilize the overall size of the grain, aspirators and gravity tables utilize grain density, and discs with indent pockets and/or indent cylinders utilize the grain length or shape. After completing the cleaning process, the grain is called clean milling oats or green oats.

In the hulling process, most facilities use the impact huller, which separates the hull from the groat by impact, rather than traditional stone hulling. The groat is the portion of the oat that remains

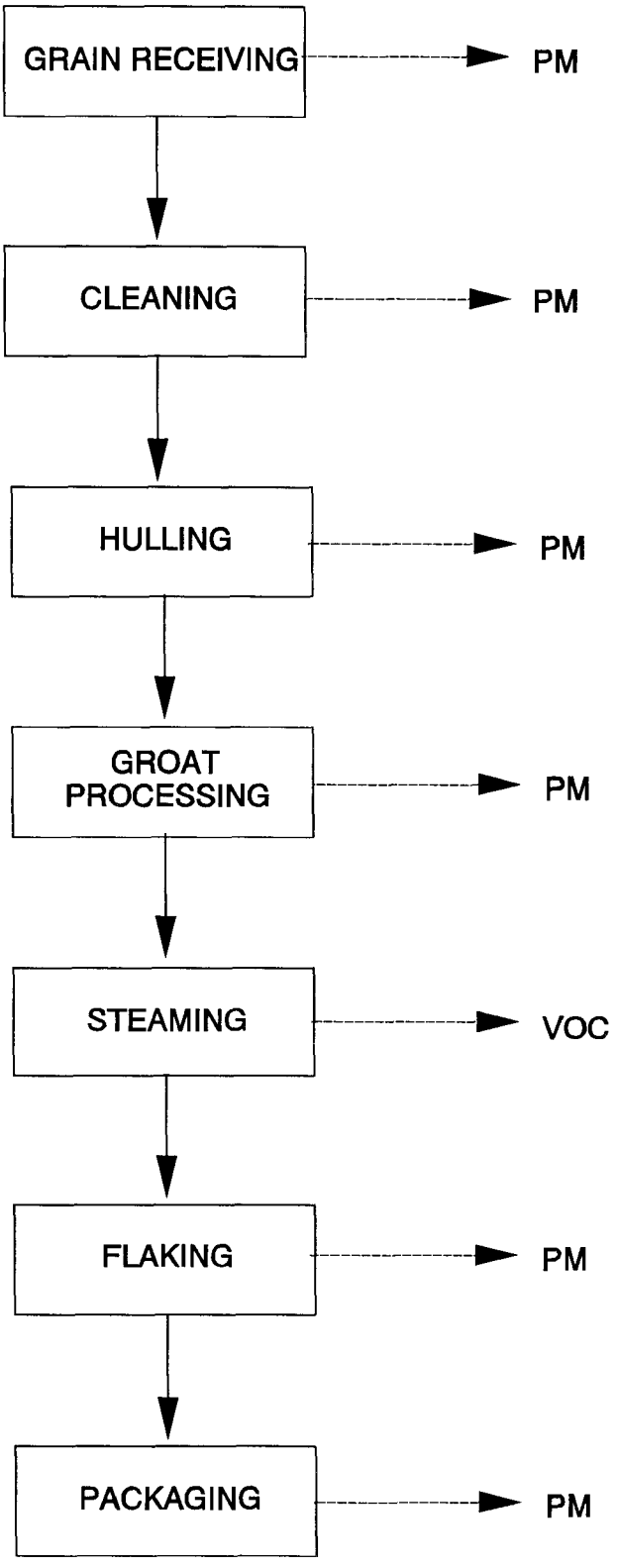

Figure 9.9.2-1. Traditional oat cereal production.

after the hull has been removed and is the part processed for human consumption. In impact hulling, the oats are fed through a rotating disc and flung out to strike the wall of the cylindrical housing tangentially, which separates the hull from the groat. The mixed material then falls to the bottom of the huller and is subjected to aspiration to separate the hulls from the groats. Impact hulling does not require predrying of the oats, although some facilities still use the traditional dry-pan process to impart a more nutty and less raw or green flavor to the final product. In the traditional dry-pan process, the green oats are dried in a stack of circular pans heated indirectly by steam to a surface temperature of 93° to 100°C (200° to 212°F). However, most facilities utilize enclosed vertical or horizontal grain conditioners or kilns to dry the groat after it has been separated from the hull because of the inefficiency of drying hulls. The grain conditioners have both direct (sparging) steam and indirect steam to heat the oats and impart flavor to the groats comparable to that resulting from the pan drying process.

After the groats are hulled, they are sized to separate the largest groats from the average-sized groats. The large groats are used to make the so-called old-fashioned oats and the other groats are cut using steel cutters to make quick oats. After groat processing, the groats (either whole or cut pieces, depending on the end product) typically pass through an atmospheric steamer located above the rollers. The groats must remain in contact with the live steam long enough to achieve a moisture content increase from 8 to 10 percent up to 10 to 12 percent, which is sufficient to provide satisfactory flakes when the whole or steel-cut groats are rolled.

The production of old-fashioned oat and quick oat flakes is the same, except for the starting material (old-fashioned oats start with whole groats and quick oats start with steel-cut groats). Both products are rolled between two cast iron equal-speed rolls in rigid end frames. Quick-oat products are rolled thinner than old-fashioned oats. Following rolling, the flakes are typically cooled and directed to packaging bins for holding.

Instant oatmeal is processed similarly to quick oatmeal through the steaming stage. After the groats are steamed, they are rolled thinner than those of quick oatmeal. The final product, along with specific amounts of hydrocolloid gum, salt, and other additives, is packaged into premeasured individual servings. The most important difference between instant oatmeal and other oatmeal products is the addition of hydrocolloid gum, which replaces the natural oat gums that would be leached from the flakes during traditional cooking, thus accelerating hydration of the flakes.

The standard package for old-fashioned and quick oatmeal is the spirally wound two-ply fiber tube with a paper label. Folded cartons are also used to package old-fashioned and quick oatmeal. Most of the instant hot cereals are packed in individual, single-serving pouches.

Farina cereals. Cereals made from farina are the second largest segment of the traditional hot cereal market, making up 18 percent. Farina is essentially wheat endosperm in granular form that is free from bran and germ. The preferred wheat for producing farina is hard red or winter wheat because the granules of endosperm for these types of wheat stay intact when hot cereals are prepared at home. As shown in Figure 9.9.2-2, farina cereal production begins with the receiving and milling of wheat. Information on wheat receiving, handling, and milling can be found in AP-42 Section 9.9.1, Grain Elevators and Processes. After milling, traditional farina cereals are packaged. Quick cook farina cereals are prepared primarily by the addition of disodium phosphate, with or without the further addition of a protcolytic enzyme. An instant (cook-in-the-bowl) product may be made by wetting and pressure-cooking the farina, then flaking and redrying prior to portion packaging.

Wheat, rice, and corn cereals. Other traditional cereals include whole wheat cereals, rice products, and corn products. These cereals make up less than 1 percent of the traditional cereal

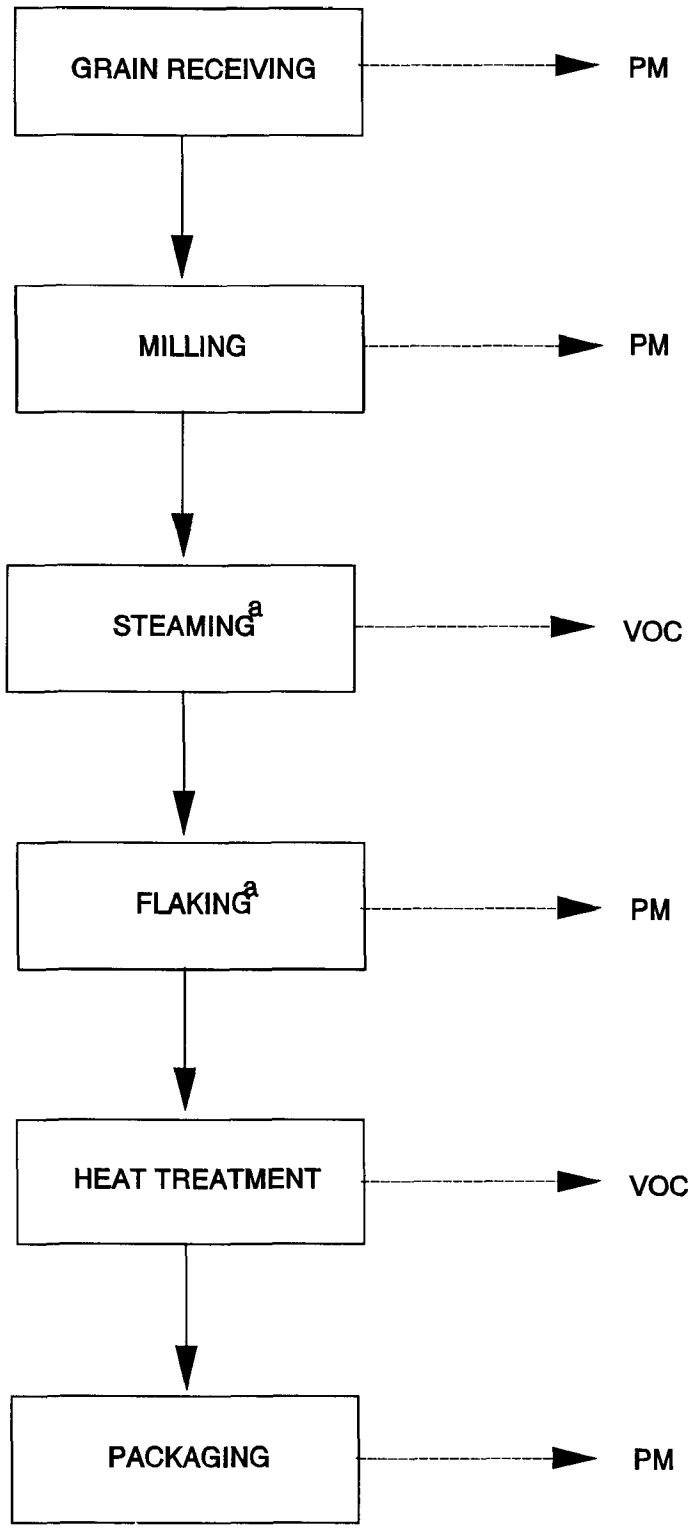

[a]Not required for traditional or quick-cooking farina cereals.

Figure 9.9.2-2. Typical instant cook farina cereal production.

market. Whole wheat traditional cereals include milled, rolled, and cracked wheat products. Milled cereals are made in a hard wheat flour mill by drawing off medium-grind milled streams. Rice products have yet to find acceptance as a hot cereal, although rice can be ground into particles about the size of farina and cooked into a hot cereal resembling farina. Corn products include corn grits, cornmeal, corn flour, and corn bran. Corn grits are served primarily as a vegetable accompaniment to the main breakfast item and are not usually classified as a breakfast cereal although they can be consumed as such. Cornmeal, corn flour, and corn bran are used primarily as ingredients in the preparation of other foods and are not classified as breakfast cereals.

Ready-To-Eat Cereals -

In the United States, the word "cereal" is typically synonymous with a processed product that is suitable for human consumption with or without further cooking at home and is usually eaten at breakfast. Ready-to-eat cereals are typically grouped by cereal form rather than the type of grain used. These groups are flaked cereals, extruded flaked cereals, gun-puffed whole grains, extruded gun-puffed cereals, oven-puffed cereals, shredded whole grains, extruded shredded cereals, and granola cereals.

Flaked cereals. Flaked cereals are made directly from whole grain kernels or parts of kernels of corn, wheat, or rice and are processed in such a way as to obtain particles, called flaking grits, that form one flake each. The production of flaked cereals involves preprocessing, mixing, cooking, delumping, drying, cooling and tempering, flaking, toasting, and packaging. A general process flow diagram for cereal flake production is presented in Figure 9.9.2-3. Grain preparation, including receiving, handling, cleaning, and hulling, for flaked cereal production is similar to that discussed under traditional cereal production and in AP-42 Section 9.9.1, Grain Elevators and Processes. Before the grains can be cooked and made into flakes, they must undergo certain preprocessing steps. For corn, this entails dry milling regular field corn to remove the germ and the bran from the kernel, leaving chunks of endosperm. Wheat is preprocessed by steaming the kernels lightly and running them through a pair of rolls to break open the kernels. Care is taken not to produce flour or fine material. Rice does not require any special preprocessing steps for the production of rice flakes other than those steps involved in milling rough rice to form the polished head rice that is the normal starting material.

The corn, wheat, or rice grits are mixed with a flavor solution that includes sugar, malt, salt, and water. Weighed amounts of raw grits and flavor solution are then charged into rotating batch cookers. After the grits are evenly coated with the flavor syrup, steam is released into the rotating cooker to begin the cooking process. The cooking is complete when each kernel or kernel part has been changed from a hard, chalky white to a soft, translucent, golden brown. When the cooking is complete, rotation stops, the steam is turned off, and vents located on the cooker are opened to reduce the pressure inside the cooker to ambient conditions and to cool its contents. The exhaust from these vents may be connected to a vacuum system for more rapid cooling. After pressure is relieved, the cooker is uncapped and the rotation restarted. The cooked grits are then dumped onto moving conveyor belts located under the cooker discharge. The conveyors then pass through delumping equipment to break and size the loosely held-together grits into mostly single grit particles. Large volumes of air are typically drawn through the delumping equipment to help cool the product. It may be necessary to perform delumping and cooling in different steps to get proper separation of the grits so that they are the optimum size for drying; in this case, cooling is typically performed first to stop the cooking action and to eliminate stickiness from the grit surface. After cooking and delumping, the grits are metered in a uniform flow to the dryer. Drying is typically performed at temperatures below 121°C (250°F) and under controlled humidity, which prevents case hardening of the grit and greatly decreases the time needed for drying to the desired moisture level. After drying, the grits are cooled to ambient temperature, usually in an unheated section of the dryer. After they are cooled, the grits are tempered by holding them in large accumulating bins to allow the moisture

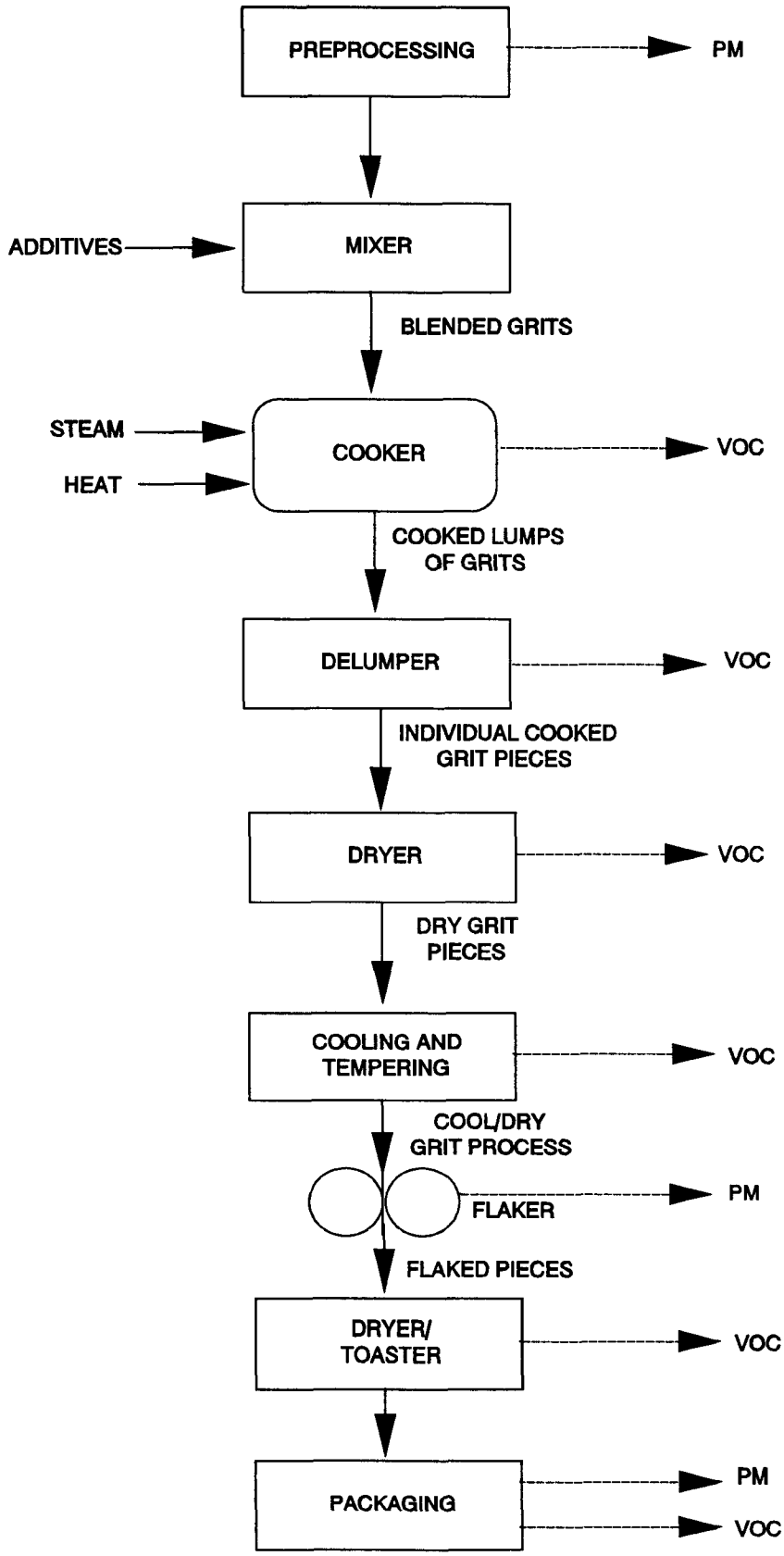

Figure 9.9.2-3. Process diagram for cereal flake production.[1]

content to equilibrate between the grit particles as well as from the center of the individual particles to the surface. After tempering, the grits pass between pairs of very large metal rolls that press them into very thin flakes. Flakes are toasted by suspending them in a hot air stream, rather than by laying them onto a flat baking surface. The ovens, sloped from feed end to discharge end, are perforated on the inside to allow air flow. These perforations are as large as possible for good air flow but small enough so that flakes cannot catch in them. The toasted flakes are then cooled and sent to packaging.

Extruded flake cereals. Extruded flakes differ from traditional flakes in that the grit for flaking is formed by extruding mixed ingredients through a die and cutting pellets of the dough into the desired size. The steps in extruded flake production are preprocessing, mixing, extruding, drying, cooling and tempering, flaking, toasting, and packaging. Figure 9.9.2-4 presents a generic process flow diagram for the production of extruded flake cereals. The primary difference between extruded flake production and traditional flake production is that extruded flakes replace the cooking and delumping steps used in traditional flake production with an extruding step. The extruder is a long, barrel-like apparatus that performs several operations along its length. The first part of the barrel kneads or crushes the grain and mixes the ingredients together. The flavor solution may be added directly to the barrel of the extruder by means of a metering pump. Heat input to the barrel of the extruder near the feed point is kept low to allow the ingredients to mix properly before any cooking or gelatinization starts. Heat is applied to the center section of the extruder barrel to cook the ingredients. The die is located at the end of the last section, which is generally cooler than the rest of the barrel. The dough remains in a compact form as it extrudes through the die and a rotating knife slices it into properly-sized pellets. The remaining steps for extruded flakes (drying, cooling, flaking, toasting, and packaging) are the same as for traditional flake production.

Gun-puffed whole grain cereals. Gun-puffed whole grains are formed by cooking the grains and then subjecting them to a sudden large pressure drop. As steam under pressure in the interior of the grain seeks to equilibrate with the surrounding lower-pressure atmosphere, it forces the grains to expand quickly or "puff." Rice and wheat are the only types of grain used in gun-puffed whole grain production, which involves pretreatment, puffing, screening, drying, and cooling. A general process flow diagram is shown in Figure 9.9.2-5. Wheat requires pretreating to prevent the bran from loosening from the grain in a ragged, haphazard manner, in which some of the bran adheres to the kernels and other parts to be blown partially off the kernels. One form of pretreatment is to add 4 percent, by weight, of a saturated brine solution (26 percent salt) to the wheat. Another form of pretreatment, called pearling, removes part of the bran altogether before puffing. The only pretreatment required for rice is normal milling to produce head rice. Puffing can be performed with manual single-shot guns, automatic single-shot, automatic multiple-shot guns, or continuous guns. In manual single-shot guns, grain is loaded into the opening of the gun and the lid is closed and sealed. As the gun begins to rotate, gas burners heat the sides of the gun body causing the moisture in the grain to convert to steam. When the lid is opened, the sudden change in pressure causes the grain to puff. Automatic single-shot guns operate on the same principle, except that steam is injected directly into the gun body. Multiple-shot guns have several barrels mounted on a slowly rotating wheel so that each barrel passes the load and fire positions at the correct time. The load, steam, and fire process for any one barrel is identical to that of the single-shot gun. After the grain is puffed, it is screened and dried before it is packaged. The final product is very porous and absorbs moisture rapidly and easily so it must be packaged in materials that possess good moisture barrier qualities.

Extruded gun-puffed cereals. Extruded gun-puffed cereals use a meal or flour as the starting ingredient instead of whole grains. The dough cooks in the extruders and is then formed into the desired shape when extruded through a die. The extrusion process for gun-puffed cereals is similar to that for extruded flake production. After the dough is extruded, it is dried and tempered. It then undergoes the same puffing and final processing steps as described for whole grain gun-puffed cereals.

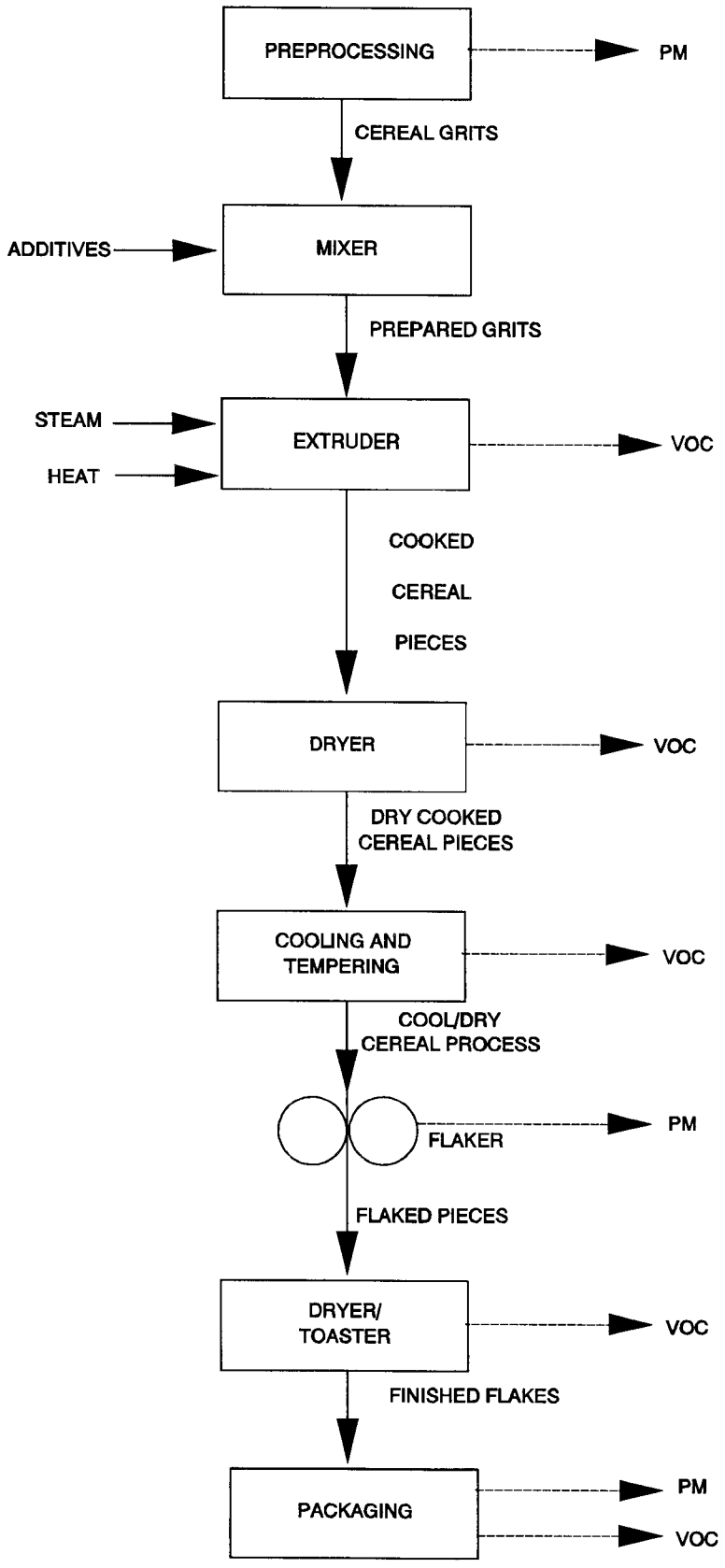

Figure 9.9.2-4. Process diagram for extruded flake production.[1]

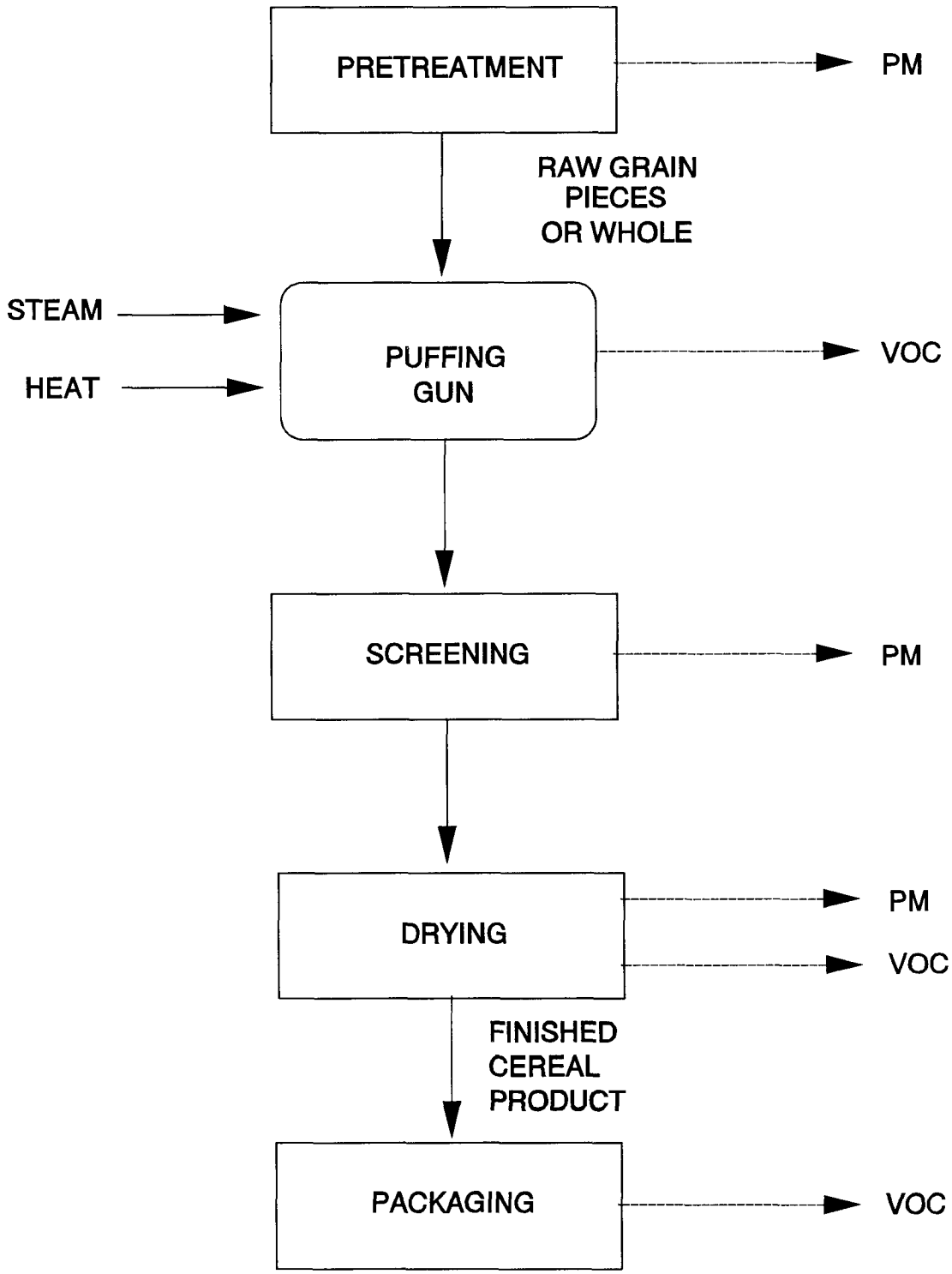

Figure 9.9.2-5. Gun-puffed whole grain production.[1]

Oven-puffed cereals. Oven-puffed cereals are made almost exclusively using whole-grain rice or corn, or mixtures of these two grains, because rice and corn inherently puff in the presence of high heat and the proper moisture content. The grains are mixed with sugar, salt, water, and malt and then pressure-cooked. After cooking, the grain is conveyed through a cooling and sizing operation. After cooling and sizing, the kernels are dried and tempered. The kernels are then passed through flaking rolls to flatten them slightly. The kernels are dried again and then oven-puffed, which requires a proper balance between kernel moisture content and oven temperature. After puffing, the cereal is cooled, fortified with vitamins (if necessary), and frequently treated with antioxidants to preserve freshness. The final product is then packaged.

Whole-grain shredded cereals. Wheat (white wheat) is primarily used to produce shredded whole grains. The steps involved in producing whole-grain shredded cereal are grain cleaning, cooking, cooling and tempering, shredding, biscuit formation, biscuit baking, and packaging. A generic process flow diagram for shredded cereal production is presented in Figure 9.9.2-6. Cooking is typically performed in batches with excess water at temperatures slightly below the boiling point at atmospheric pressure. Cooking vessels usually have horizontal baskets big enough to hold 50 bushels of raw wheat. Steam is injected directly into the water to heat the grain. After the cooking cycle is completed, the water is drained from the vessel and the cooked wheat is dumped and conveyed to cooling units, which surface-dry the wheat and reduce the temperature to ambient levels, thus stopping the cooking process. After the grain is cooled, it is placed in large holding bins and allowed to temper. The shredding process squeezes the wheat kernels between one roll with a smooth surface and another roll with a grooved surface. A comb is positioned against the grooved roll and the comb teeth pick the wheat shred from the groove. There are many variations in the grooved roll. After the shreds are produced, they fall in layers onto a conveyer moving under the rolls. After the web of many layers of shreds reaches the end of the shredder, it is fed through a cutting device to form the individual biscuits. The edges of the cutting device are dull, rather than sharp, so that the cutting action compresses the edges of the biscuit together to form a crimped joint, which holds the shreds together in biscuit form. After the individual biscuits are formed, they are baked in a band or continuous conveyor-belt oven. After the biscuits are baked and dried, they are ready for packaging.

Extruded shredded cereals. Extruded shredded cereals are made in much the same way as whole-grain shredded cereals except that extruded shredded cereals use a meal or flour as a raw material instead of whole grains. Raw grains include wheat, corn, rice, and oats, and, because the grains are used in flour form, they can be used alone or in mixtures. The steps involved in extruded shredded cereal production are grain preprocessing (including grain receiving, handling, and milling), mixing, extruding, cooling and tempering, shredding, biscuit formation, baking, drying, and packaging. The preprocessing, mixing, extruding, and cooling and tempering steps are the same as those discussed for other types of cereal. Shredding, biscuit formation, baking, drying, and packaging are the same as for whole-grain shredded cereal. Extruded shredded cereals are typically made into small, bite-size biscuits, instead of the larger biscuits of whole-grain shredded wheat.

Granola cereals. Granola cereals are ready-to-eat cereals that are prepared by taking regular, old-fashioned whole-rolled oats or quick-cooking oats and mixing them with other ingredients, such as nut pieces, coconut, brown sugar, honey, malt extract, dried milk, dried fruits, water, cinnamon, nutmeg, and vegetable oil. This mixture is then spread in a uniform layer onto the band of a continuous dryer or oven. The toasted layer is then broken into chunks.

Packaging -

The package materials for ready-to-eat breakfast cereals include printed paperboard cartons, protective liners, and the necessary adhesives. The cartons are printed and produced by carton suppliers and are delivered, unfolded and stacked on pallets, to the breakfast cereal manufacturers.

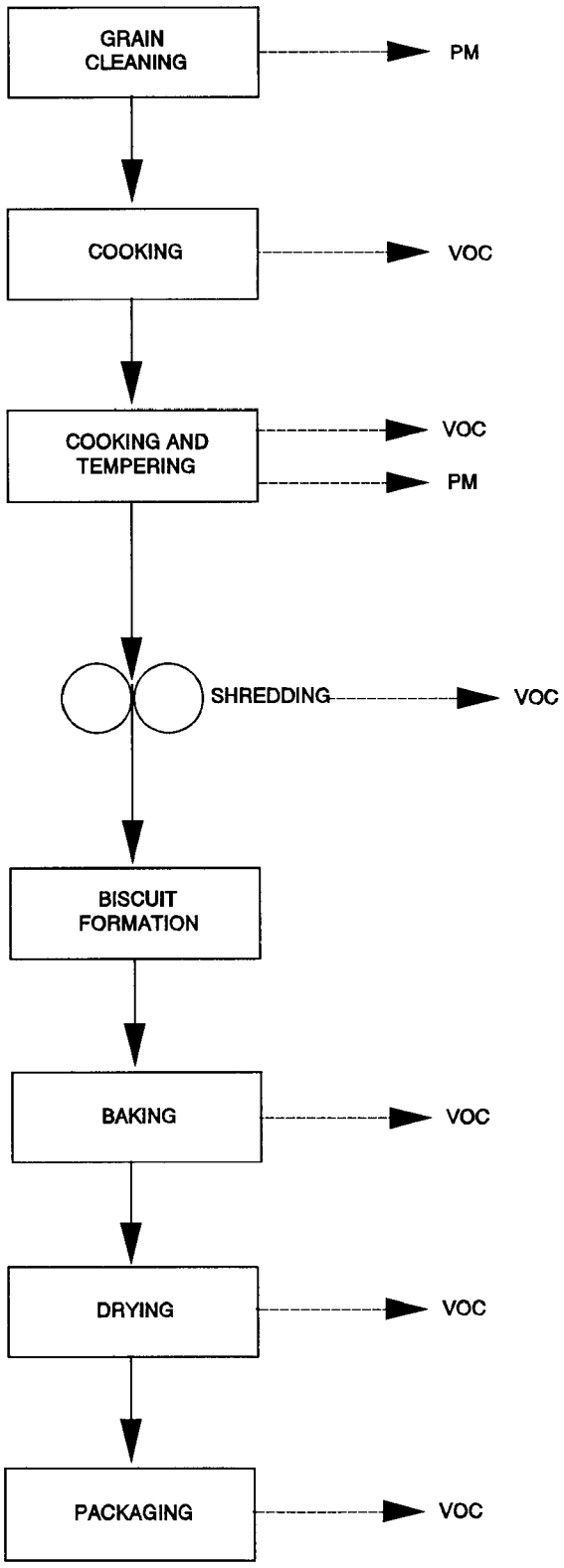

Figure 9.9.2-6. Whole grain shredded cereal production.

The liners, also supplied by outside sources, must be durable and impermeable to moisture or moisture vapor. However, cereals that are not hygroscopic and/or retain satisfactory texture in moisture equilibrium with ambient atmosphere do not require moisture-proof liners. The most common type of liners used today are made of high-density polyethylene (HDPE) film. The adhesives used in cereal packaging are water-based emulsions and hot melts. The cereal industry is the second largest user of adhesives for consumer products. Several variations of packaging lines may be used in the ready-to-eat breakfast cereal industry, including lines that fill the liners either before or after they have been inserted into the carton and lines that utilize more manual labor and less automated equipment.

9.9.2.3 Emissions And Controls

Air emissions may arise from a variety of sources in breakfast cereal manufacturing. Particulate matter (PM) emissions result mainly from solids handling and mixing. For breakfast cereal manufacturing, PM emissions occur during the milling and processing of grain, as the raw ingredients are dumped, weighed, and mixed, as the grains are hulled, and possibly during screening, drying, and packaging. Emission sources associated with grain milling and processing include grain receiving, precleaning and handling, cleaning house separators, milling, and bulk loading. Applicable emission factors for these processes are presented in AP-42 Section 9.9.1, Grain Elevators and Processes. There are no data on PM emissions from mixing of ingredients or packaging for breakfast cereal production.

Volatile organic compound (VOC) emissions may potentially occur at almost any stage in the production of breakfast cereal, but most usually are associated with thermal processing steps, such as drying, steaming, heat treatment, cooking, toasting, extruding, and puffing. Adhesives used during packaging of the final product may also be a source of VOC emissions. No information is available, however, on any VOC emissions resulting from these processes of breakfast cereal manufacturing.

Control technology to control PM emissions from breakfast cereal manufacturing is similar to that discussed in AP-42 Section 9.9.1, Grain Elevators and Processes. Because of the operational similarities, emission control methods are similar in most grain milling and processing plants. Cyclones or fabric filters are often used to control emissions from grain handling operations (e. g., unloading, legs, cleaners, etc.) and also from other processing operations. Fabric filters are used extensively in flour mills. However, certain operations within milling operations are not amenable to the use of these devices and alternatives are needed. Wet scrubbers, for example, are applied where the effluent gas stream has a high moisture content. No information exists for VOC emission control technology for breakfast cereal manufacturing.

References For Section 9.9.2

1. R. E. Tribelhorn, "Breakfast Cereals", *Handbook Of Cereal Science And Technology*, K. J. Lorenz and K. Kulp, Editors. Marcel Dekker, Inc., 1991.

2. *1987 Census Of Manufactures: Grain Mill Products*, Industry Series. U. S. Department of Commerce, Bureau of Census. Issued April 1990.

3. R. B. Fast, "Manufacturing Technology Of Ready-To-Eat Cereals", *Breakfast Cereals And How They Are Made*, R. B. Fast and E. F. Caldwell, Editors. American Association of Cereal Chemists, Inc., 1990.

4. D. L. Maxwell and J. L. Holohan, "Breakfast Cereals", *Elements Of Food Technology*, N. W. Desrosier, Editor. AVI Publishing Company, Inc., 1977.

9.9.3 Pet Food

[Work In Progress]

9.9.4 Alfalfa Dehydrating

9.9.4.1 General[1-2]

Dehydrated alfalfa is a meal product resulting from the rapid drying of alfalfa by artificial means. Alfalfa meal is processed into pellets for use in chicken rations, cattle feed, hog rations, sheep feed, turkey mash, and other formula feeds. It is important for its protein content, growth and reproductive factors, pigmenting xanthophylls, and vitamin contributions.

9.9.4.2 Process Description[1-5]

A schematic of a generalized alfalfa dehydrator plant is given in Figure 9.9.4-1. Standing alfalfa is windrowed in the field to allow wilting to reduce moisture to an acceptable level balancing energy requirements, trucking requirements, and dehydrator capacity while maintaining the alfalfa quality and leaf quantity. The windrowed alfalfa is then chopped and hauled to the dehydration plant. The truck dumps the chopped alfalfa (wet chops) onto a self-feeder, which carries it into a direct-fired rotary drum. Within the drum, the wet chops are dried from an initial moisture content of about 30 to 70 percent (by weight, wet basis) to about 6 to 12 percent. Typical combustion gas temperatures within the gas-fired drum range from 154° to 816°C (300° to 1500°F) at the inlet to 60° to 95°C (140° to 210°F) at the outlet.

From the drying drum, the dry chops are pneumatically conveyed into a primary cyclone that separates them from the high-moisture, high-temperature exhaust stream. From the primary cyclone, the chops are fed into a hammermill, which grinds the dry chops into a meal. The meal is pneumatically conveyed from the hammermill into a meal collector cyclone in which the meal is separated from the airstream and discharged into a holding bin. The exhaust is recycled to a bag filter (baghouse). The meal is then fed into a pellet mill where it is steam conditioned and extruded into pellets.

From the pellet mill, the pellets are either pneumatically or mechanically conveyed to a cooler, through which air is drawn to cool the pellets and, in some cases, remove fines. Fines are more commonly removed using shaker screens located ahead of or following the cooler, with the fines being conveyed back into the meal collector cyclone, meal bin, or pellet mill. Cyclone separators may be employed to separate entrained fines in the cooler exhaust and to collect pellets when the pellets are pneumatically conveyed from the pellet mill to the cooler.

Following cooling and screening, the pellets are transferred to bulk storage. Dehydrated alfalfa is most often stored and shipped in pellet form, although the pellets may also be ground in a hammermill and shipped in meal form. When the finished or ground pellets are pneumatically or mechanically transferred to storage or loadout, additional cyclones may be used for product airstream separation.

9.9.4.3 Emissions And Controls[1-3,5-7]

Particulate matter (PM) is the primary pollutant emitted from alfalfa dehydrating plants, although some odors may arise from the organic volatiles driven off during drying and pellet formation. The major source of PM emissions is the primary cyclone following the dryer drum.

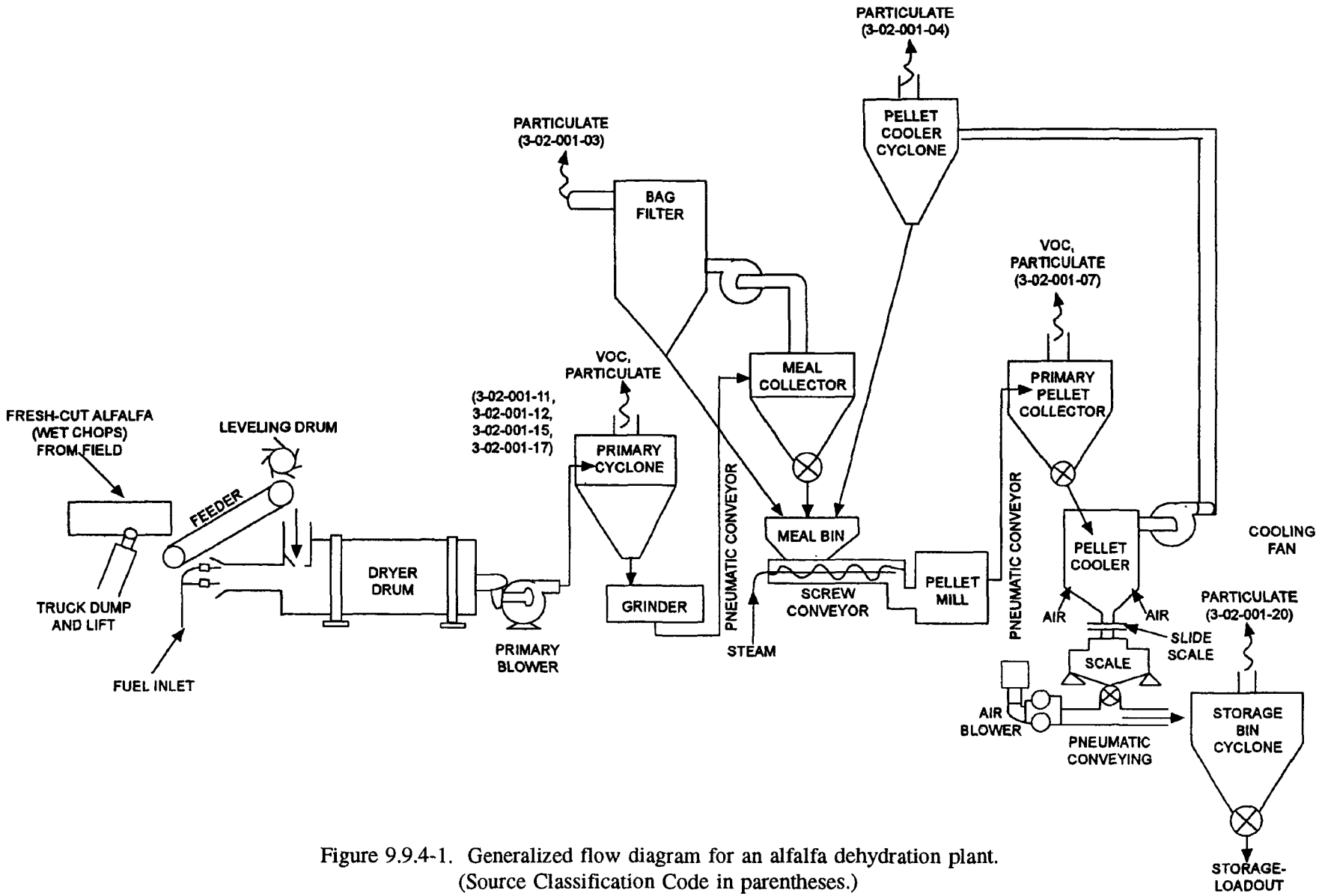

Figure 9.9.4-1. Generalized flow diagram for an alfalfa dehydration plant.
(Source Classification Code in parentheses.)

Lesser emission sources include the downstream cyclone separators and the bagging and loading operations.

Emission factors for various dryer types utilized in alfalfa dehydrating plants are given in Table 9.9.4-1. Note that, although these sources are common to many plants, there will be considerable variation from the generalized flow diagram in Figure 9.9.4-1 depending on the desired nature of the product, the physical layout of the plant, and the modifications made for air pollution control.

Table 9.9.4-1. EMISSION FACTORS FOR ALFALFA DEHYDRATION[a]

EMISSION FACTOR RATING: D

Source	Particulate (PM)		VOC	Ref.
	Filterable	Condensible		
Triple-pass dryer cyclone				
- Gas-fired (SCC 3-02-001-11)	4.8	1.0	ND	8-9
- Coal-fired[b] (SCC 3-02-001-12)	7.5	ND	ND	13
Single-pass dryer cyclone				
- Gas-fired (SCC 3-02-001-15)	4.1	0.65	ND	10-11
- Wood-fired (SCC 3-02-001-17)	3.1	1.3	ND	12,14
Meal collector cyclone (SCC 3-02-001-03)	ND	ND	NA	
- Bag filter				
Pellet collector cyclone (SCC 3-02-001-07)	ND	ND	ND	
Pellet cooler cyclone (SCC 3-02-001-04)	ND	ND	NA	
Storage bin cyclone (SCC 3-02-001-20)	ND	ND	NA	

[a] Emission factor units are lb/ton of finished pellet produced, unless noted. To convert from lb/ton to kg/Mg, multiply by 0.5. SCC = Source Classification Code. ND = No data. NA = Not applicable.
[b] Emission factor based on quantity of dried alfalfa to hammermill.

Air pollution control (and product recovery) is accomplished in alfalfa dehydrating plants in a variety of ways. A simple, yet effective technique is the proper maintenance and operation of the alfalfa dehydrating equipment. Particulate emissions can be reduced significantly if the feeder discharge rates are uniform, if the dryer furnace is operated properly, if proper airflows are employed in the cyclone collectors, and if the hammermill is well maintained and not overloaded. It is especially important in this regard not to overdry and possibly burn the chops as this results in the generation of smoke and increased fines in the grinding and pelletizing operations.

Equipment modification provides another means of particulate control. Existing cyclones can be replaced with more efficient cyclones and concomitant air flow systems. In addition, the furnace and burners can be modified or replaced to minimize flame impingement on the incoming green chops.

In plants where the hammermill is a production bottleneck, a tendency exists to overdry the chops to increase throughput, which results in increased emissions. Adequate hammermill capacity can reduce this practice. Recent improvements in process technique and emission control technology have reduced particulate emissions from dehydration facilities. Future technology should contribute to further reductions in particulate emissions.

Secondary control devices can be employed on the cyclone collector exhaust streams. Generally, this practice has been limited to the installation of secondary cyclones or fabric filters on the meal collector, pellet collector or pellet cooler cyclones. Primary cyclones are not controlled by fabric filters because of the high moisture content in the resulting exhaust stream. Medium energy wet scrubbers are effective in reducing particulate emissions from the primary cyclones, but have only been installed at a few plants.

Some plants employ cyclone effluent recycle systems for particulate control. One system skims off the particulate-laden portion of the primary cyclone exhaust and returns it to the alfalfa dryer. Another system recycles a large portion of the meal collector cyclone exhaust back to the hammermill. Both systems can be effective in controlling particulates but may result in operating problems, such as condensation in the recycle lines and plugging or overheating of the hammermill.

References For Section 9.9.4

1. *Air Pollution From Alfalfa Dehydrating Mills*, Technical Report A 60-4, Robert A. Taft Sanitary Engineering Center, U.S.P.H.S., Department Of Health, Education, And Welfare, Cincinnati, OH.

2. Schafer, R.D., "How Ohio Is Solving The Alfalfa Dust Problem", *A.M.A. Archives Of Industrial Health, 17*:67-69, January 1958.

3. Source information supplied by Ken Smith of the American Dehydrators Association, Mission, KS, December 1975.

4. Written correspondence from W. Cobb, American Alfalfa Processors Association, to T. Campbell, Midwest Research Institute, Updated alfalfa dehydration process diagram, May 18, 1995.

5. Telephone conversation with D. Burkholder, Shofstall Alfalfa, and T. Lapp and T. Campbell, Midwest Research Institute, Clarification of alfalfa dehydration process, June 13, 1995.

6. *Emission Factor Development For The Feed And Grain Industry*, EPA-450/3-75-054, U. S. Environmental Protection Agency, Research Triangle Park, NC, October 1974.

7. *Particulate Emissions From Alfalfa Dehydrating Plants - Control Costs And Effectiveness*, EPA 650/2-74-007, U. S. Environmental Protection Agency, Research Triangle Park, NC, January 1974.

8. *Source Emissions Report For Gothenburg Feed Products Co., Gothenburg, NE*, AirSource Technologies, Lenexa, KS, October 8, 1993.

9. *Source Emissions Report For Shofstall Alfalfa, Alfalfa Dehydrating Facility, Odessa, NE*, AirSource Technologies, Lenexa, KS, October 15, 1993.

10. *Source Emissions Report For Morrison & Quirk, Inc., Alfalfa Dehydrating Facility, Lyons, NE,* AirSource Technologies, Lenexa, KS, October 15, 1993.

11. *Source Emissions Report For Lexington Alfalfa Dehydrators, Inc., Alfalfa Dehydrating Facility, Darr, NE,* AirSource Technologies, Lenexa, KS, October 15, 1993.

12. *Stack Particulate Samples Collected At Verhoff Alfalfa, Hoytville, OH,* Affiliated Environmental Services, Inc., Sandusky, OH, September 25, 1992.

13. *Emission Test Report For Toledo Alfalfa, Oregon, OH,* Owens-Illinois Analytical Services, Toledo, OH, June 4, 1987.

14. *Stack Particulate Samples Collected At Verhoff Alfalfa, Ottawa, OH,* Affiliated Environmental Services, Inc., Sandusky, OH, June 28, 1995.

9.9.5 Pasta Manufacturing

9.9.5.1 General[1-2]

Although pasta products were first introduced in Italy in the 13th century, efficient manufacturing equipment and high-quality ingredients have been available only since the 20th century. Prior to the industrial revolution, most pasta products were made by hand in small shops. Today, most pasta is manufactured by continuous, high capacity extruders, which operate on the auger extrusion principle in which kneading and extrusion are performed in a single operation. The manufacture of pasta includes dry macaroni, noodle, and spaghetti production.

9.9.5.2 Process Description[1-2]

Pasta products are produced by mixing milled wheat, water, eggs (for egg noodles or egg spaghetti), and sometimes optional ingredients. These ingredients are typically added to a continuous, high capacity auger extruder, which can be equipped with a variety of dies that determine the shape of the pasta. The pasta is then dried and packaged for market.

Raw Materials —

Pasta products contain milled wheat, water, and occasionally eggs and/or optional ingredients. Pasta manufacturers typically use milled durum wheat (semolina, durum granulars, and durum flour) in pasta production, although farina and flour from common wheat are occasionally used. Most pasta manufacturers prefer semolina, which consists of fine particles of uniform size and produces the highest quality pasta product. The water used in pasta production should be pure, free from off-flavors, and suitable for drinking. Also, since pasta is produced below pasteurization temperatures, water should be used of low bacterial count. Eggs (fresh eggs, frozen eggs, dry eggs, egg yolks, or dried egg solids) are added to pasta to make egg noodles or egg spaghetti and to improve the nutritional quality and richness of the pasta. Small amounts of optional ingredients, such as salt, celery, garlic, and bay leafs, may also be added to pasta to enhance flavor. Disodium phosphate may be used to shorten cooking time. Other ingredients, such as gum gluten, glyceryl monostearate, and egg whites, may also be added. All optional ingredients must be clearly labeled on the package.

Wheat Milling —

Durum wheat is milled into semolina, durum granular, or durum flour using roll mills. Semolina milling is unique in that the objective is to prepare granular middlings with a minimum of flour production. Grain milling is discussed in AP-42 Section 9.9.1, Grain Elevators and Processes. After the wheat is milled, it is mixed with water, eggs, and any other optional ingredients.

Mixing —

In the mixing operation, water is added to the milled wheat in a mixing trough to produce dough with a moisture content of approximately 31 percent. Eggs and any optional ingredients may also be added. Most modern pasta presses are equipped with a vacuum chamber to remove air bubbles from the pasta before extruding. If the air is not removed prior to extruding, small bubbles

will form in the pasta which diminish the mechanical strength and give the finished product a white, chalky appearance.

Extruding —

After the dough is mixed, it is transferred to the extruder. The extrusion auger not only forces the dough through the die, but it also kneads the dough into a homogeneous mass, controls the rate of production, and influences the overall quality of the finished product. Although construction and dimension of extrusion augers vary by equipment manufacturers, most modern presses have sharp-edged augers that have a uniform pitch over their entire length. The auger fits into a grooved extrusion barrel, which helps the dough move forward and reduces friction between the auger and the inside of the barrel. Extrusion barrels are equipped with a water cooling jacket to dissipate the heat generated during the extrusion process. The cooling jacket also helps to maintain a constant extrusion temperature, which should be approximately 51°C (124°F). If the dough is too hot (above 74°C [165°F]), the pasta will be damaged.

Uniform flow rate of the dough through the extruder is also important. Variances in the flow rate of the dough through the die cause the pasta to be extruded at different rates. Products of nonuniform size must be discarded or reprocessed, which adds to the unit cost of the product. The inside surface of the die also influences the product appearance. Until recently, most dies were made of bronze, which was relatively soft and required repair or periodic replacement. Recently, dies have been improved by fitting the extruding surface of the die with Teflon® inserts to extend the life of the dies and improve the quality of the pasta.

Drying —

Drying is the most difficult and critical step to control in the pasta production process. The objective of drying is to lower the moisture content of the pasta from approximately 31 percent to 12 to 13 percent so that the finished product will be hard, retain its shape, and store without spoiling. Most pasta drying operations use a preliminary drier immediately after extrusion to prevent the pasta from sticking together. Predrying hardens the outside surface of the pasta while keeping the inside soft and plastic. A final drier is then used to remove most of the moisture from the product.

Drying temperature and relative humidity increments are important factors in drying. Since the outside surface of the pasta dries more rapidly than the inside, moisture gradients develop across the surface to the interior of the pasta. If dried too quickly, the pasta will crack, giving the product a poor appearance and very low mechanical strength. Cracking can occur during the drying process or as long as several weeks after the product has left the drier. If the pasta is dried too slowly, it tends to spoil or become moldy during the drying process. Therefore, it is essential that the drying cycle be tailored to meet the requirements of each type of product. If the drying cycle has been successful, the pasta will be firm but also flexible enough so that it can bend to a considerable degree before breaking.

Packaging —

Packaging keeps the product free from contamination, protects the pasta from damage during shipment and storage, and displays the product favorably. The principal packaging material for noodles is the cellophane bag, which provides moisture-proof protection for the product and is used easily on automatic packaging machines, but is difficult to stack on grocery shelves. Many manufacturers utilize boxes instead of bags to package pasta because boxes are easy to stack, provide good protection for fragile pasta products, and offer the opportunity to print advertising that is easier to read than on bags.

9.9.5.3 Emissions and Controls

Air emissions may arise from a variety of sources in pasta manufacturing. Particulate matter (PM) emissions result mainly from solids handling and mixing. For pasta manufacturing, PM emissions occur during the wheat milling process, as the raw ingredients are mixed, and possibly during packaging. Emission sources associated with wheat milling include grain receiving, precleaning/handling, cleaning house, milling, and bulk loading. Applicable emission factors for these processes are presented in AP-42 Section 9.9.1, Grain Elevators and Processes. There are no data for PM emissions from mixing of ingredients or packaging for pasta production.

Volatile organic compound (VOC) emissions may potentially occur at almost any stage in the production of pasta, but most usually are associated with thermal processing steps, such as pasta extruding or drying. No information is available on any VOC emissions due to the heat generated during pasta extrusion or drying.

Control of PM emissions from pasta manufacturing is similar to that discussed in AP-42 Section 9.9.1, Grain Elevators and Processes. Because of the operational similarities, emission control methods used in grain milling and processing plants are similar to those in grain elevators. Cyclones or fabric filters are often used to control emissions from the grain handling operations (e. g., unloading, legs, cleaners, etc.) and also from other processing operations. Fabric filters are used extensively in flour mills. However, certain operations within milling operations are not amenable to the use of these devices and alternatives are needed. Wet scrubbers, for example, may be applied where the effluent gas stream has a high moisture content.

References for Section 9.9.5

1. D. E. Walsh and K. A. Gilles, "Pasta Technology", *Elements Of Food Technology*, N. W. Desrosier, Editor, AVI Publishing Company, Inc., 1977.

2. *1992 Census Of Manufactures: Miscellaneous Food And Kindred Products*, Preliminary Report Industry Series, U. S. Department of Commerce, Bureau of Census, Issued August 1994.

9.9.6 Bread Baking

[Work In Progress]

9.9.7 Corn Wet Milling

9.9.7.1 General[1]

Establishments in corn wet milling are engaged primarily in producing starch, syrup, oil, sugar, and byproducts such as gluten feed and meal, from wet milling of corn and sorghum. These facilities may also produce starch from other vegetables and grains, such as potatoes and wheat. In 1994, 27 corn wet milling facilities were reported to be operating in the United States.

9.9.7.2 Process Description[1-4]

The corn wet milling industry has grown in its 150 years of existence into the most diversified and integrated of the grain processing industries. The corn refining industry produces hundreds of products and byproducts, such as high fructose corn syrup (HFCS), corn syrup, starches, animal feed, oil, and alcohol.

In the corn wet milling process, the corn kernel (see Figure 9.9.7-1) is separated into 3 principal parts: (1) the outer skin, called the bran or hull; (2) the germ, containing most of the oil; and (3) the endosperm (gluten and starch). From an average bushel of corn weighing 25 kilograms (kg) (56 pounds [lb]), approximately 14 kg (32 lb) of starch is produced, about 6.6 kg (14.5 lb) of feed and feed products, about 0.9 kg (2 lb) of oil, and the remainder is water. The overall corn wet milling process consists of numerous steps or stages, as shown schematically in Figure 9.9.7-2.

Shelled corn is delivered to the wet milling plant primarily by rail and truck and is unloaded into a receiving pit. The corn is then elevated to temporary storage bins and scale hoppers for weighing and sampling. The corn then passes through mechanical cleaners designed to remove unwanted material, such as pieces of cobs, sticks, and husks, as well as meal and stones. The cleaners agitate the kernels over a series of perforated metal sheets through which the smaller foreign materials drop. A blast of air blows away chaff and dust, and electromagnets remove bits of metal. Coming out of storage bins, the corn is given a second cleaning before going into "steep" tanks.

Steeping, the first step in the process, conditions the grain for subsequent milling and recovery of corn constituents. Steeping softens the kernel for milling, helps break down the protein holding the starch particles, and removes certain soluble constituents. Steeping takes place in a series of tanks, usually referred to as steeps, which are operated in continuous-batch process. Steep tanks may hold from 70.5 to 458 cubic meters (m^3) (2,000 to 13,000 bushels [bu]) of corn, which is then submerged in a current of dilute sulfurous acid solution at a temperature of about 52°C (125°F). Total steeping time ranges from 28 to 48 hours. Each tank in the series holds corn that has been steeping for a different length of time.

Corn that has steeped for the desired length of time is discharged from its tank for further processing, and the tank is filled with fresh corn. New steeping liquid is added, along with recycled water from other mill operations, to the tank with the "oldest" corn (in steep time). The liquid is then passed through a series of tanks, moving each time to the tank holding the next "oldest" batch of corn until the liquid reaches the newest batch of corn.

Water drained from the newest corn steep is discharged to evaporators as so-called "light steepwater" containing about 6 percent of the original dry weight of grain. By dry-weight, the solids

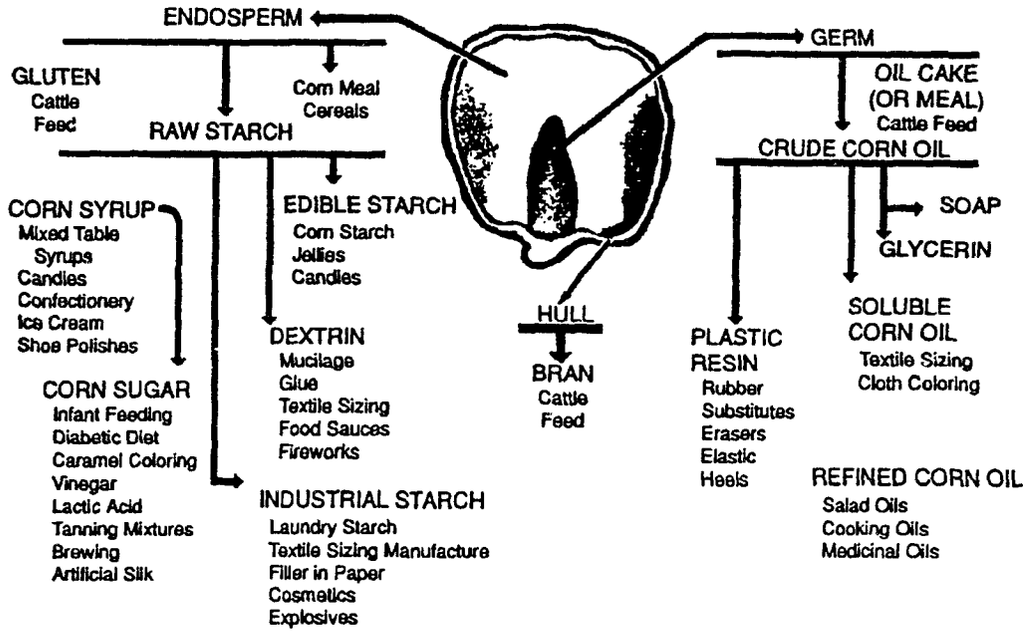

Figure 9.9.7-1. Various uses of corn.

in the steepwater contain 35 to 45 percent protein and are worth recovering as feed supplements. The steepwater is concentrated to 30 to 55 percent solids in multiple-effect evaporators. The resulting steeping liquor, or heavy steepwater, is usually added to the fibrous milling residue, which is sold as animal feed. Some steepwater may also be sold for use as a nutrient in fermentation processes.

The steeped corn passes through degerminating mills, which tear the kernel apart to free both the germ and about half of the starch and gluten. The resultant pulpy material is pumped through liquid cyclones to extract the germ from the mixture of fiber, starch, and gluten. The germ is subsequently washed, dewatered, and dried; the oil extracted; and the spent germ sold as corn oil meal or as part of corn gluten feed. More details on corn oil production are contained in Section 9.11.1, "Vegetable Oil Processing".

The product slurry passes through a series of washing, grinding, and screening operations to separate the starch and gluten from the fibrous material. The hulls are discharged to the feed house, where they are dried for use in animal feeds.

At this point, the main product stream contains starch, gluten, and soluble organic materials. The lower density gluten is separated from the starch by centrifugation, generally in 2 stages. A high-quality gluten, of 60 to 70 percent protein and 1.0 to 1.5 percent solids, is then centrifuged, dewatered, and dried for adding to animal feed. The centrifuge underflow containing the starch is passed to starch washing filters to remove any residual gluten and solubles.

The pure starch slurry is now directed into 1 of 3 basic finishing operations, namely, ordinary dry starch, modified starches, and corn syrup and sugar. In the production of ordinary dry starch, the starch slurry is dewatered with vacuum filters or basket centrifuges. The discharged starch cake has a moisture content of 35 to 42 percent and is further dewatered thermally in 1 of several types of dryers. The dry starch is then packaged or shipped in bulk, or a portion may be kept for use in making dextrin.

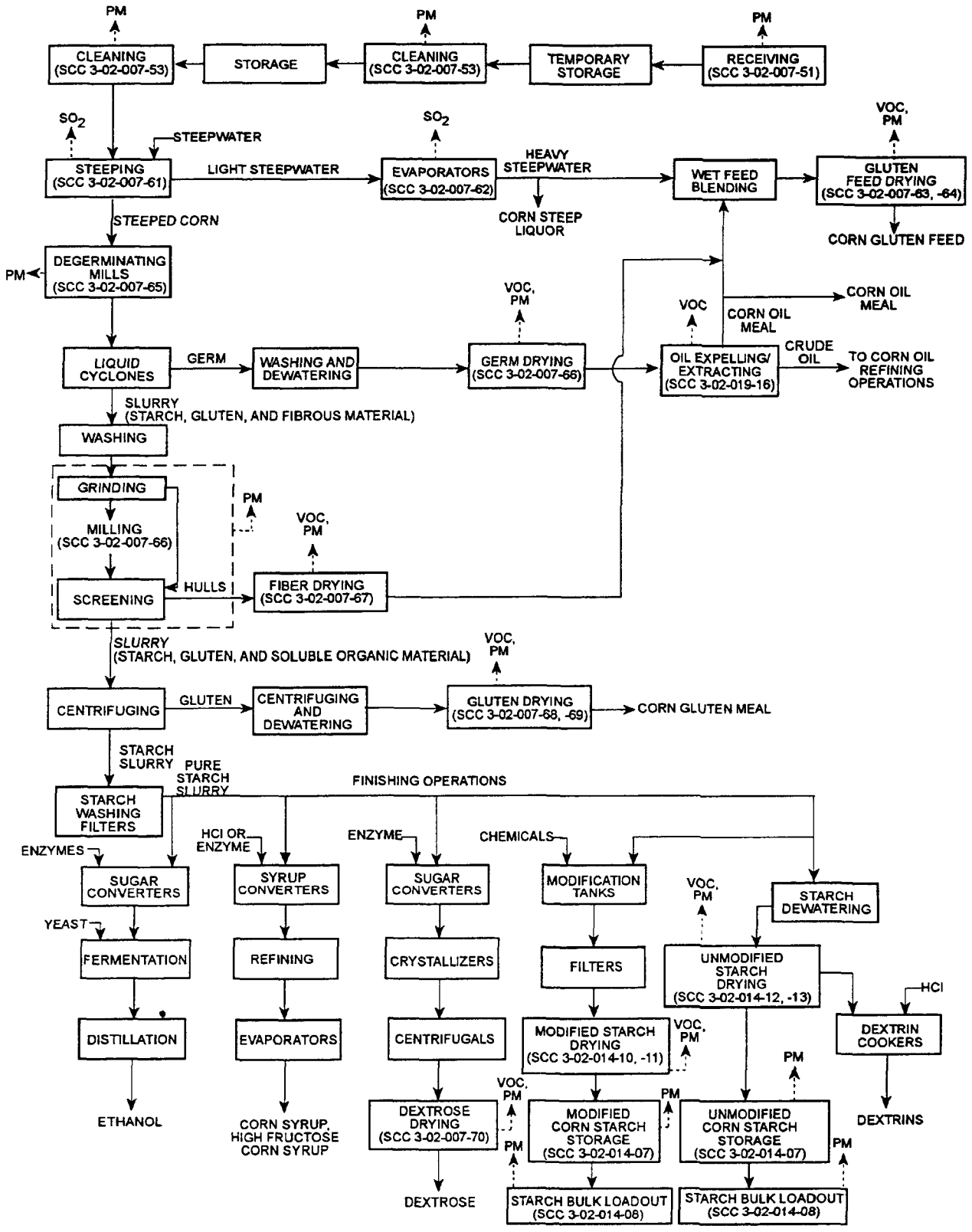

Figure 9.9.7-2. Corn wet milling process flow diagram.[1-4]
(Source Classification Codes in parentheses.)

Modified starches are manufactured for various food and trade industries for which unmodified starches are not suitable. For example, large quantities of modified starches go into the manufacture of paper products as binding for the fiber. Modifying is accomplished in tanks that treat the starch slurry with selected chemicals, such as hydrochloric acid, to produce acid-modified starch; sodium hypochlorite, to produce oxidized starch; and ethylene oxide, to produce hydroxyethyl starches. The treated starch is then washed, dried, and packaged for distribution.

Across the corn wet milling industry, about 80 percent of starch slurry goes to corn syrup, sugar, and alcohol production. The relative amounts of starch slurry used for corn syrup, sugar, and alcohol production vary widely among plants. Syrups and sugars are formed by hydrolyzing the starch — partial hydrolysis resulting in corn syrup, and complete hydrolysis producing corn sugar. The hydrolysis step can be accomplished using mineral acids, enzymes, or a combination of both. The hydrolyzed product is then refined, which is the decolorization with activated carbon and the removal of inorganic salt impurities with ion exchange resins. The refined syrup is concentrated to the desired level in evaporators and is cooled for storage and shipping.

Dextrose production is quite similar to corn syrup production, the major difference being that the hydrolysis process is allowed to go to completion. The hydrolyzed liquor is refined with activated carbon and ion exchange resins, to remove color and inorganic salts, and the product stream is concentrated by evaporation to the 70 to 75 percent solids range. After cooling, the liquor is transferred to crystallizing vessels, where it is seeded with sugar crystals from previous batches. The solution is held for several days while the contents are further cooled and the dextrose crystallizes. After about 60 percent of the dextrose solids crystallize, they are removed from the liquid by centrifuges, are dried, and are packed for shipment.

A smaller portion of the syrup refinery is devoted to the production of corn syrup solids. In this operation, refined corn syrup is further concentrated by evaporation to a high dry substance level. The syrup is then solidified by rapid cooling and subsequently milled to form an amorphous crystalline product.

Ethanol is produced by the addition of enzymes to the pure starch slurry to hydrolyze the starch to fermentable sugars. Following hydrolysis, yeast is added to initiate the fermentation process. After about 2 days, approximately 90 percent of the starch is converted to ethanol. The fermentation broth is transferred to a still where the ethanol (about 50 vol%) is distilled. Subsequent distillation and treatment steps produce 95 percent, absolute, or denatured ethanol. More details on this ethanol production process, emissions, and emission factors is contained in Section 6.21, "Ethanol".

9.9.7.3 Emissions And Controls[1-2,4-8]

The diversity of operations in corn wet milling results in numerous and varied potential sources of air pollution. It has been reported that the number of process emission points at a typical plant is well over 100. The main pollutant of concern in grain storage and handling operations in corn wet milling facilities is particulate matter (PM). Organic emissions (e. g., hexane) from certain operations at corn oil extraction facilities may also be significant. These organic emissions (and related emissions from soybean processing) are discussed in Section 9.11.1, "Vegetable Oil Processing". Other possible pollutants of concern are volatile organic compounds (VOC) and combustion products from grain drying, sulfur dioxide (SO_2) from corn wet milling operations, and organic materials from starch production. The focus here is primarily on PM sources for grain handling operations. Sources of VOC and SO_2 are identified, although no data are available to quantify emissions.

Emission sources associated with grain receiving, cleaning, and storage are similar in character to those involved in all other grain elevator operations, and other PM sources are comparable to those found in other grain processing plants as described in Section 9.9.1, "Grain Elevators And Processes". However, corn wet milling operations differ from other processes in that they are also sources of SO_2 and VOC emissions, as described below.

The corn wet milling process uses about 1.1 to 2.0 kg of SO_2 per megagram (Mg) of corn (0.06 to 0.11 lb/bu). The SO_2 is dissolved in process waters, but its pungent odor is present in the slurries, necessitating the enclosing and venting of the process equipment. Vents can be wet-scrubbed with an alkaline solution to recover the SO_2 before the exhaust gas is discharged to the atmosphere. The most significant source of VOC emissions, and also a source of PM emissions, from corn wet milling is the exhaust from the different drying processes. The starch modification procedures also may be sources of acid mists and VOC emissions, but data are insufficient to characterize or to quantify these emissions.

Dryer exhausts exhibit problems with odor and blue haze (opacity). Germ dryers emit a toasted smell that is not considered objectionable in most areas. Gluten dryer exhausts do not create odor or visible emission problems if the drying temperature does not exceed 427°C (800°F). Higher temperatures promote hot smoldering areas in the drying equipment, creating a burnt odor and a blue-brown haze. Feed drying, where steepwater is present, results in environmentally unacceptable odor if the drying temperature exceeds 427°C (800°F). Blue haze formation is a concern when drying temperatures are elevated. These exhausts contain VOC with acrid odors, such as acetic acid and acetaldehyde. Rancid odors can come from butyric and valeric acids, and fruity smells emanate from many of the aldehydes present.

The objectionable odors indicative of VOC emissions from process dryers have been reduced to commercially acceptable levels with ionizing wet-collectors, in which particles are charged electrostatically with up to 30,000 volts. An alkaline wash is necessary before and after the ionizing sections. Another approach to odor/VOC control is thermal oxidation at approximately 750°C (1382°F) for 0.5 seconds, followed by some form of heat recovery. This hot exhaust can be used as the heat source for other dryers or for generating steam in a boiler specifically designed for this type of operation. Incineration can be accomplished in conventional boilers by routing the dryer exhaust gases to the primary air intake. The limitations of incineration are potential fouling of the boiler air intake system with PM and derated boiler capacity because of low oxygen content. These limitations severely restrict this practice. At least 1 facility has attempted to use a regenerative system, in which dampers divert the gases across ceramic fill where exhaust heats the fumes to be incinerated. Incinerator size can be reduced 20 to 40 percent when some of the dryer exhaust is fed back into the dryer furnace. From 60 to 80 percent of the dryer exhaust may be recycled by chilling it to condense the water before recycling.

The PM emissions generated from grain receiving, handling, and processing operations at corn wet milling facilities can be controlled either by process modifications designed to prevent or inhibit emissions or by application of capture collection systems.

The fugitive emissions from grain handling operations generated by mechanical energy imparted to the dust, both by the operations themselves and by local air currents in the vicinity of the operations, can be controlled by modifying the process or facility to limit the generation of fugitive dust. The primary preventive measures used by facilities are construction and sealing practices that limit the effect of air currents, and minimizing grain free fall distances and grain velocities during handling and transfer. Some recommended construction and sealing practices that minimize emissions are: (1) enclosing the receiving area to the extent practicable; (2) specifying dust-tight cleaning and

processing equipment; (3) using lip-type shaft seals at bearings on conveyor and other equipment housings; (4) using flanged inlets and outlets on all spouting, transitions, and miscellaneous hoppers; and (5) fully enclosing and sealing all areas in contact with products handled.

While preventive measures can reduce emissions, most facilities also require ventilation or capture/collection systems to reduce emissions to acceptable levels. Milling operations generally are ventilated, and some facilities use hood systems on all handling and transfer operations. The control devices typically used in conjunction with capture systems for grain handling and processing operations are cyclones (or mechanical collectors) and fabric filters. Both of these systems can achieve acceptable levels of control for many grain handling and processing sources. However, even though cyclone collectors can achieve acceptable performance in some scenarios, and fabric filters are highly efficient, both devices are subject to failure if not properly operated and maintained. Ventilation system malfunction, of course, can lead to increased emissions at the source.

Table 9.9.7-1 shows the filterable PM emission factors developed from the available data on several source/control combinations. Table 9.9.7-2 shows potential sources of VOC and SO_2, although no data are available to characterize these emissions.

Table 9.9.7-1 (Metric And English Units). PARTICULATE MATTER EMISSION FACTORS FOR CORN WET MILLING OPERATIONS[a]

EMISSION FACTOR RATING: E

Emission Source	Type Of Control	Filterable PM[b]	
		kg/Mg	lb/ton
Grain receiving[c] (trucks) (SCC 3-02-007-51)	Fabric filter	0.016	0.033
Grain handling[c] (legs, belts, etc.) (SCC 3-02-007-52)	None	0.43	0.87
Grain cleaning[d] (SCC 3-02-007-53)	None	0.82	1.6
Grain cleaning[d] (SCC 3-02-007-53)	Cyclone	0.086	0.17
Starch storage bin[e] (SCC 3-02-014-07)	Fabric filter	0.0007	0.0014
Starch bulk loadout[f] (SCC 3-02-014-08)	Fabric filter	0.00025	0.00049
Gluten feed drying			
Direct-fired rotary dryers[g] (SCC 3-02-007-63)	Product recovery cyclone	0.13	0.27
Indirect-fired rotary dryers[g] (SCC 3-02-007-64)	Product recovery cyclone[h]	0.25	0.49
Starch drying			
Flash dryers[j] (SCC 3-02-014-10, -12)	Wet scrubber	0.29	0.59
Spray dryers[k] (SCC 3-02-014-11, -13)	Fabric filter	0.080	0.16
Gluten drying			
Direct-fired rotary dryers[g] (SCC 3-02-007-68)	Product recovery cyclone	0.13	0.27
Indirect-fired rotary dryers[g] (SCC 3-02-007-69)	Product recovery cyclone	0.25	0.49
Fiber drying (SCC 3-02-007-67)	ND	ND	ND
Germ drying (SCC 3-02-007-66)	ND	ND	ND
Dextrose drying (SCC 3-02-007-70)	ND	ND	ND
Degerminating mills (SCC 3-02-007-65)	ND	ND	ND
Milling (SCC 3-02-007-56)	ND	ND	ND

Table 9.9.7-1 (cont.).

[a] For grain transfer and handling operations, factors are for an aspirated collection system of 1 or more capture hoods ducted to a particulate collection device. Because of natural removal processes, uncontrolled emissions may be overestimated. ND = no data. SCC = Source Classification Code.
[b] Emission factors based on weight of PM, regardless of size, per unit weight of corn throughput unless noted.
[c] Assumed to be similar to country grain elevators (see Section 9.9.1).
[d] Assumed to be similar to country grain elevators (see Section 9.9.1). If 2 cleaning stages are used, emission factor should be doubled.
[e] Reference 9.
[f] Reference 9. Emission factor based on weight of PM per unit weight of starch loaded.
[g] Reference 10. Type of material dried not specified, but expected to be gluten meal or gluten feed. Emission factor based on weight of PM, regardless of size, per unit weight of gluten meal or gluten feed produced.
[h] Includes data for 4 (out of 9) dryers known to be vented through product recovery cyclones, and other systems are expected to have such cyclones. Emission factor based on weight of PM, regardless of size, per unit weight of gluten meal or gluten feed produced.
[j] References 11-13. EMISSION FACTOR RATING: D. Type of material dried is starch, but whether the starch is modified or unmodified is not known. Emission factor based on weight of PM, regardless of size, per unit weight of starch produced.
[k] Reference 14. Type of material dried is starch, but whether the starch is modified or unmodified is not known. Emission factor based on weight of PM, regardless of size, per unit weight of starch produced.

Table 9.9.7-2 (Metric And English Units). EMISSION FACTORS FOR CORN WET MILLING OPERATIONS

Emission Source	Type Of Control	VOC		SO_2	
		kg/Mg	lb/ton	kg/Mg	lb/ton
Steeping (SCC 3-02-007-61)	ND	ND	ND	ND	ND
Evaporators (SCC 3-02-007-62)	ND	ND	ND	ND	ND
Gluten feed drying (SCC 3-02-007-63, -64)	ND	ND	ND	ND	ND
Germ drying (SCC 3-02-007-66)	ND	ND	ND	ND	ND
Fiber drying (SCC 3-02-007-67)	ND	ND	ND	ND	ND
Gluten drying (SCC 3-02-007-68, -69)	ND	ND	ND	ND	ND
Starch drying (SCC 3-02-014-10, -11, -12, -13)	ND	ND	ND	ND	ND
Dextrose drying (SCC 3-02-007-70)	ND	ND	ND	ND	ND
Oil expelling/extraction (SCC 3-02-019-16)	ND	ND	ND	ND	ND

ND = no data. SCC = Source Classification Code.

References For Section 9.9.7

1. Written communication from M. Kosse, Corn Refiners Association, Inc., Alexandria, VA, to D. Safriet, U. S. Environmental Protection Agency, Research Triangle Park, NC, January 18, 1994.

2. L. J. Shannon, *et al.*, *Emissions Control In The Grain And Feed Industry, Volume I: Engineering And Cost Study*, EPA-450/3-73-003a, U. S. Environmental Protection Agency, Research Triangle Park, NC, December 1973.

3. G. F. Spraque and J. W. Dudley, *Corn And Corn Improvement*, Third Edition, American Society Of Agronomy, Crop Science Society Of America, and Soil Science Society Of America, Madison, WI, 1988.

4. S. A. Watson and P. E. Ramstad, *Corn Chemistry And Technology*, American Association of Cereal Chemists, St. Paul, MN, 1987.

5. American Feed Manufacturers Association, Arlington, VA, *Feed Technology*, 1985.

6. D. Wallace, "Grain Handling And Processing", *Air Pollution Engineering Manual*, Van Nostrand Reinhold, NY, 1992.

7. H. D. Wardlaw, Jr., *et al.*, *Dust Suppression Results With Mineral Oil Applications For Corn And Milo*, Transactions Of The American Society Of Agricultural Engineers, Saint Joseph, MS, 1989.

8. A. V. Myasnihora, *et al.*, *Handbook Of Food Products — Grain And Its Products*, Israel Program for Scientific Translations, Jerusalem, Israel, 1969.

9. *Starch Storage Bin And Loading System*, Report No. 33402, prepared by Beling Consultants, Moline, IL, November 1992.

10. *Source Category Survey: Animal Feed Dryers*, EPA-450/3-81-017, U. S. Environmental Protection Agency, Research Triangle Park, NC, December 1981.

11. *Starch Flash Dryer*, Report No. 33405, prepared by Beling Consultants, Moline, IL, February 1993.

12. *No. 4 Starch Flash Dryer*, Report No. I-7231-1, prepared by The Almega Corporation, Bensenville, IL, May 1993.

13. *No. 1 Starch Flash Dryer*, Report No. 86-177-3, prepared by Burns & McDonnell, Kansas City, MO, August 1986.

14. *Starch Spray Dryer*, Report No. 21511, prepared by Mostardi-Platt Associates, Inc., Bensenville, IL, August 1992.

9.10 Confectionery Products

9.10.1 Sugar Processing

9.10.2 Salted And Roasted Nuts and Seeds

9.10.1 Sugar Processing

9.10.1.1 Cane Sugar Processing

9.10.1.2 Beet Sugar Processing

9.10.1.1 Cane Sugar Processing

9.10.1.1.1 General[1-3]

Sugar cane is burned in the field prior to harvesting to remove unwanted foliage as well as to control rodents and insects. Harvesting is done by hand or, where possible, by mechanical means.

After harvesting, the cane goes through a series of processing steps for conversion to the final sugar product. It is first washed to remove dirt and trash, then crushed and shredded to reduce the size of the stalks. The juice is next extracted by 1 of 2 methods, milling or diffusion. In milling, the cane is pressed between heavy rollers to squeeze out the juice; in diffusion, the sugar is leached out by water and thin juices. The raw sugar then goes through a series of operations including clarification, evaporation, and crystallization in order to produce the final product. The fibrous residue remaining after sugar extraction is called bagasse.

All mills fire some or all of their bagasse in boilers to provide power necessary in their milling operation. Some, having more bagasse than can be utilized internally, sell the remainder for use in the manufacture of various chemicals such as furfural.

9.10.1.1.2 Emissions[2,3]

The largest sources of emissions from sugar cane processing are the openfield burning in the harvesting of the crop, and the burning of bagasse as fuel. In the various processes of crushing, evaporation, and crystallization, relatively small quantities of particulates are emitted. Emission factors for sugar cane field burning are shown in Table 2.5-2. Emission factors for bagasse firing in boilers are included in Section 1.8.

References For Section 9.10.1.1

1. "Sugar Cane," In: *Kirk-Othmer Encyclopedia Of Chemical Technology*, Vol. IX, New York, John Wiley and Sons, Inc., 1964.

2. E. F. Darley, "Air Pollution Emissions From Burning Sugar Cane And Pineapple From Hawaii", In: *Air Pollution From Forest And Agricultural Burning*, Statewide Air Pollution Research Center, University of California, Riverside, California, Prepared for the U. S. Environmental Protection Agency, Research Triangle Park, NC, under Grant No. R800711, August 1974.

3. *Background Information For Establishment Of National Standards Of Performance For New Sources*, Raw Cane Sugar Industry, Environmental Engineering, Inc., Gainesville, FL, Prepared for the U. S. Environmental Protection Agency, Research Triangle Park, NC, under Contract No. CPA 70-142, Task Order 9c, July 15, 1971.

9.10.1.2 Beet Sugar Processing

[Work In Progress]

9.10.2 Salted And Roasted Nuts And Seeds

This industry encompasses a range of edible nuts and seeds processed primarily for human consumption. The salted and roasted nuts and seeds industry primarily includes establishments that produce salted, roasted, dried, cooked, or canned nuts, or that process grains and seeds for snack use. This industry does not encompass facilities that manufacture candy-coated nuts or those that manufacture peanut butter. The overall production of finished salted and roasted nuts and seeds has two primary components. Typically, nuts undergo post harvest processing such as hulling and shelling, either by the farmer on the farm, or by contractor companies either on the farm or at facilities near the farm, called crop preparation service facilities. The shelled nuts or seeds are shipped to food processing plants to produce the final product.

Many of the post-harvest operations and processes are common to most of the nuts and seeds, including field harvesting and loading, unloading, precleaning, drying, screening, and hulling. Other operations specific to individual nuts and seeds include sizing, grading, skinning, and oil or dry roasting. The processing of harvested nuts and seeds can produce particulate emissions primarily from the unloading, precleaning, hulling or shelling, and screening operations. In almond processing, all of the operations, except for unloading, are usually controlled to reduce the level of ambient particulate. The emissions from the unloading operation are usually uncontrolled.

In this document, the industry is divided into Section 9.10.2.1, "Almond Processing", and Section 9.10.2.2, "Peanut Processing". Sections on other nuts and seeds may be published in later editions if sufficient data on the processes are available.

9.10.2.1 Almond Processing

9.10.2.1.1 General[1-2]

Almonds are edible tree nuts, grown principally in California. The nuts are harvested from orchards and transported to almond processing facilities, where the almonds are hulled and shelled. The function of an almond huller/sheller is to remove the hull and shell of the almond from the nut, or meat. Orchard debris, soil, and pebbles represent 10 to 25 percent of the field weight of material brought to the almond processing facility. Clean almond meats are obtained as about 20 percent of the field weight. Processes for removing the debris and almond hulls and shells are potential sources of air emissions.

9.10.2.1.2 Process Description[1-7]

After almonds are collected from the field, they undergo two processing phases, post-harvest processing and finish processing. These phases are typically conducted at two different facilities. There are two basic types of almond post-harvest processing facilities: those that produce hulled, in-shell almonds as a final product (known as hullers), and those that produce hulled, shelled, almond meats as a final product (known as huller/shellers). Almond precleaning, hulling, and separating operations are common to both types of facilities. The huller/sheller includes additional steps to remove the almond meats from their shells. A typical almond hulling operation is shown in Figure 9.10.2.1-1. A typical almond huller/sheller is depicted in Figure 9.10.2.1-2. The hulled, shelled almond meats are shipped to large production facilities where the almonds may undergo further processing into various end products. Almond harvesting, along with precleaning, hulling, shelling, separating, and final processing operations, is discussed in more detail below.

Almond harvesting and processing are a seasonal industry, typically beginning in August and running from two to four months. However, the beginning and duration of the season vary with the weather and with the size of the crop. The almonds are harvested either manually, by knocking the nuts from the tree limbs with a long pole, or mechanically, by shaking them from the tree. Typically the almonds remain on the ground for 7 to 10 days to dry. The fallen almonds are then swept into rows. Mechanical pickers gather the rows for transport to the almond huller or huller/sheller. Some portion of the material in the gathered rows includes orchard debris, such as leaves, grass, twigs, pebbles, and soil. The fraction of debris is a function of farming practices (tilled versus untilled), field soil characteristics, and age of the orchard, and it can range from less than 5 to 60 percent of the material collected. On average, field weight yields 13 percent debris, 50 percent hulls, 14 percent shells, and 23 percent clean almond meats and pieces, but these ratios can vary substantially from farm to farm.

The almonds are delivered to the processing facility and are dumped into a receiving pit. The almonds are transported by screw conveyors and bucket elevators to a series of vibrating screens. The screens selectively remove orchard debris, including leaves, soil, and pebbles. A destoner removes stones, dirt clods, and other larger debris. A detwigger removes twigs and small sticks. The air streams from the various screens, destoners, and detwiggers are ducted to cyclones or fabric filters for particulate matter removal. The recovered soil and fine debris, such as leaves and grass, are disposed of by spreading on surrounding farmland. The recovered twigs may be chipped and used as fuel for co-generation plants. The precleaned almonds are transferred from the precleaner area by another series of conveyors and elevators to storage bins to await further processing. (In

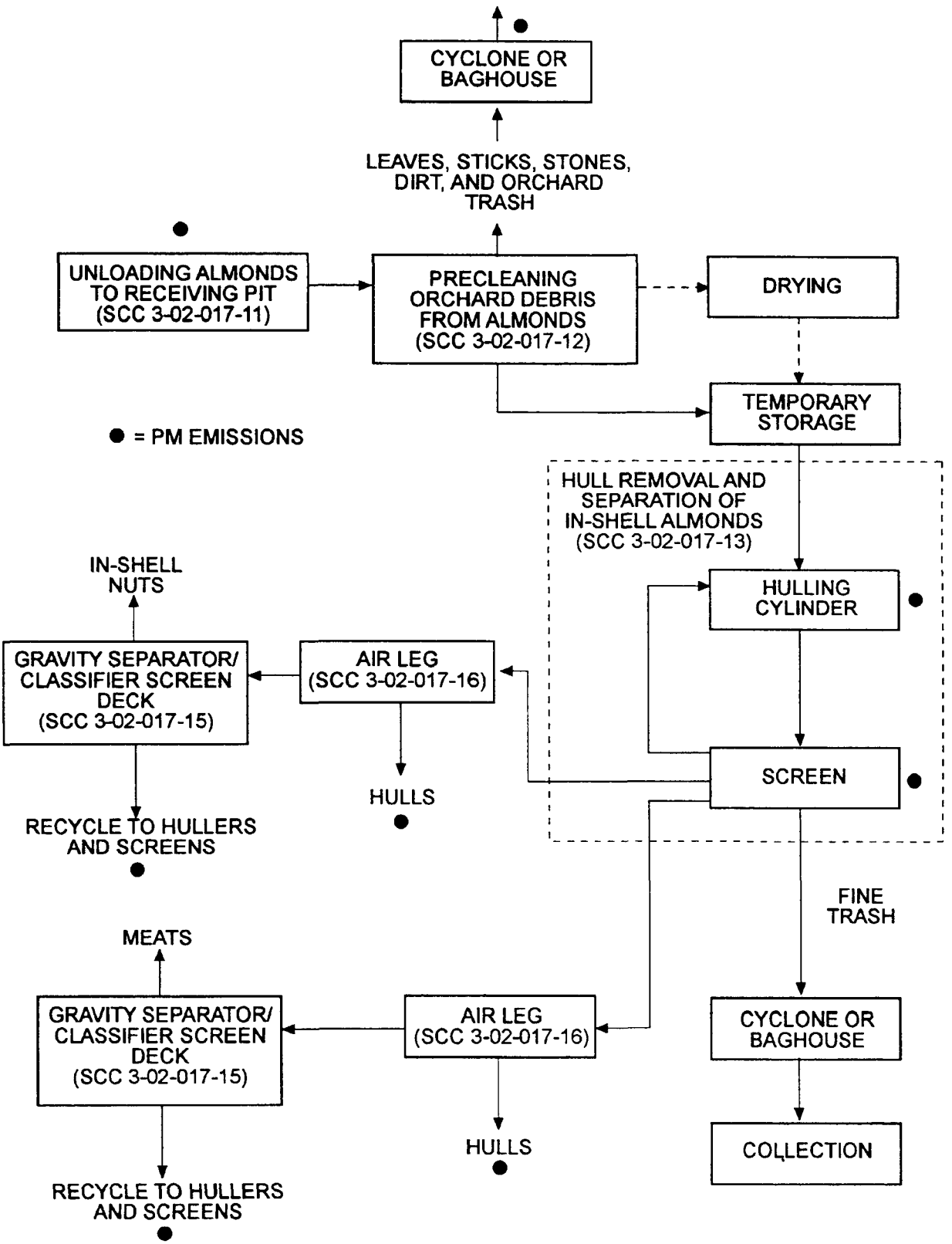

Figure 9.10.2.1-1. Representative almond hulling process flow diagram. (Source Classification Codes in parentheses.)

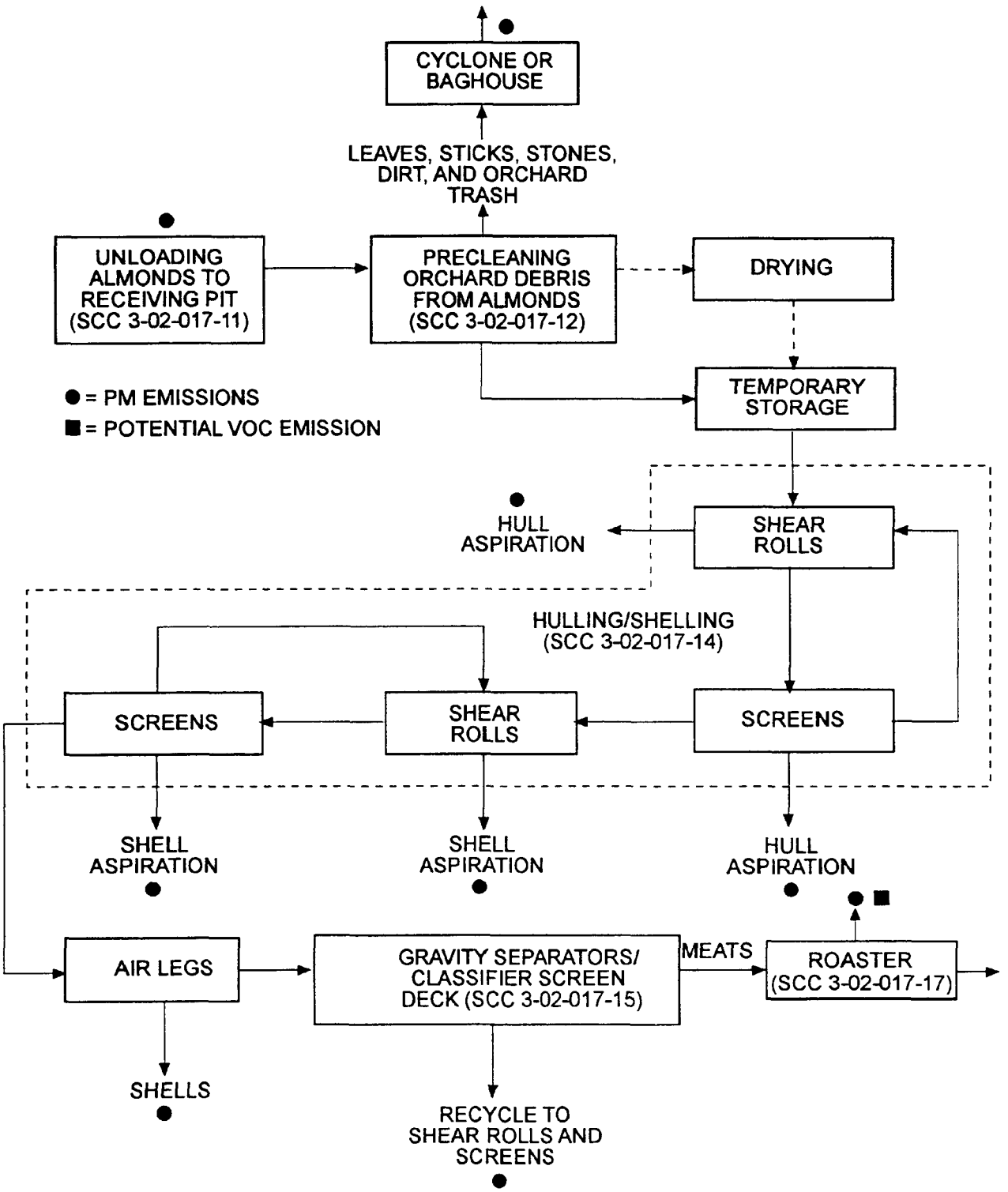

Figure 9.10.2.1-2. Representative almond huller/sheller process flow diagram. (Source Classification Codes in parentheses.)

some instances, the precleaned almonds may be conveyed to a dryer before storage. However, field drying is used in most operations.)

Almonds are conveyed on belt and bucket conveyors to a series of hulling cylinders or shear rolls, which crack the almond hulls. Hulling cylinders are typically used in almond huller facilities. Series of shear rolls are generally used in huller/shellers. The hulling cylinders have no integral provision for aspiration of shell pieces. Shear rolls, on the other hand, do have integral aspiration to remove shell fragments from loose hulls and almond meats. The cracked almonds are then discharged to a series of vibrating screens or a gravity table, which separates hulls and unhulled almonds from the in-shell almonds, almond meats, and fine trash. The remaining unhulled almonds pass through additional hulling cylinders or shear rolls and screen separators. The number of passes and the combinations of equipment vary among facilities. The hulls are conveyed to storage and sold as an ingredient in the manufacture of cattle feed. The fine trash is ducted to a cyclone or fabric filter for collection and disposal.

In a hulling facility, the hulled, in-shell almonds are separated from any remaining hull pieces in a series of air legs (counter-flow forced air gravity separators) and are then graded, collected, and sold as finished product, along with an inevitable small percentage of almond meats. In huller/shellers, the in-shell almonds continue through more shear rolls and screen separators.

As the in-shell almonds make additional passes through sets of shear rolls, the almond shells are cracked or sheared away from the meat. More sets of vibrating screens separate the shells from the meats and small shell pieces. The separated shells are aspirated and collected in a fabric filter or cyclone, and then conveyed to storage for sale as fuel for co-generation plants. The almond meats and small shell pieces are conveyed on vibrating conveyor belts and bucket elevators to air classifiers or air legs that separate the small shell pieces from the meats. The number of these air separators varies among facilities. The shell pieces removed by these air classifiers are also collected and stored for sale as fuel for co-generation plants. The revenues generated from the sale of hulls and shells are generally sufficient to offset the costs of operating the almond processing facility.

The almond meats are then conveyed to a series of gravity tables or separators (classifier screen decks), which sort the meats by lights, middlings, goods, and heavies. Lights, middlings, and heavies, which still contain hulls and shells, are returned to various points in the process. Goods are conveyed to the finished meats box for storage. Any remaining shell pieces are aspirated and sent to shell storage.

The almond meats are now ready either for sales as raw product or for further processing, typically at a separate facility. The meats may be blanched, sliced, diced, roasted, salted, or smoked. Small meat pieces may be ground into meal or pastes for bakery products. Almonds are roasted by gradual heating in a rotating drum. They are heated slowly to prevent the skins and outer layers from burning. Roasting time develops the flavor and affects the color of the meats. To obtain almonds with a light brown color and a medium roast requires a 500-pound roaster fueled with natural gas about 1.25 hours at 118°C (245°F).

9.10.2.1.3 Emissions And Controls[1-3,5-9]

Particulate matter (PM) is the primary air pollutant emitted from almond post-harvest processing operations. All operations in an almond processing facility involve dust generation from the movement of trash, hulls, shells, and meats. The quantity of PM emissions varies depending on the type of facility, harvest method, trash content, climate, production rate, and the type and number of controls used by the facility. Fugitive PM emissions are attributable primarily to unloading

operations, but some fugitive emissions are generated from precleaning operations and subsequent screening operations.

Because farm products collected during harvest typically contain some residual dirt, which includes trace amounts of metals, it stands to reason that some amount of these metals will be emitted from the various operations along with the dust. California Air Resources Board (CARB) data indicate that metals emitted from almond processing include arsenic, beryllium, cadmium, copper, lead, manganese, mercury, and nickel in quantities on the order of 5×10^{-11} to 5×10^{-4} kilograms (kg) of metal per kg of PM emissions (5×10^{-11} to 5×10^{-4} pounds [lb] of metal per lb of PM emissions). It has been suggested that sources of these metals other than the inherent trace metal content of soil may include fertilizers, other agricultural sprays, and groundwater.

In the final processing operations, almond roasting is a potential source of volatile organic compound (VOC) emissions. However, no chemical characterization data are available to hypothesize what compounds might be emitted, and no emission source test data are available to quantify these potential emissions.

Emission control systems at almond post-harvest processing facilities include both ventilation systems to capture the dust generated during handling and processing of almonds, shells, and hulls, and an air pollution control device to collect the captured PM. Cyclones formerly served as the principal air pollution control devices for PM emissions from almond post harvest processing operations. However, fabric filters, or a combination of fabric filters and cyclones, are becoming common. Practices of combining and controlling specific exhaust streams from various operations vary considerably among facilities. The exhaust stream from a single operation may be split and ducted to two or more control devices. Conversely, exhaust streams from several operations may be combined and ducted to a single control device. According to one source within the almond processing industry, out of approximately 350 almond hullers and huller/shellers, no two are alike.

Emission factors for almond processing sources are presented in Table 9.10.2.1-1.

Table 9.10.2.1-1 (Metric And English Units). EMISSION FACTORS FOR ALMOND PROCESSING[a]

EMISSION FACTOR RATING: E

Source	Filterable PM		Condensable Inorganic PM		PM-10[b]	
	kg/Mg	lb/ton	kg/Mg	lb/ton	kg/Mg	lb/ton
Unloading[c] (SCC 3-02-017-11)	0.030	0.060	ND	ND	ND	ND
Precleaning cyclone[d] (SCC 3-02-017-12)	0.48	0.95	ND	ND	0.41	0.82
Precleaning baghouse[e] (SCC 3-02-017-12)	0.0084	0.017	ND	ND	0.0075	0.015
Hulling/separating cyclone[d] (SCC 3-02-017-13)	0.57	1.1	ND	ND	0.41	0.81
Hulling/separating baghouse[e] (SCC 3-02-017-13)	0.0078	0.016	ND	ND	0.0065	0.013
Hulling/shelling baghouse[f] (SCC 3-02-017-14)	0.026	0.051	0.0068	0.014	ND	ND
Classifier screen deck cyclone[d] (SCC 3-02-017-15)	0.20	0.40	ND	ND	0.16	0.31
Air leg[d] (SCC 3-02-017-16)	0.26	0.51	ND	ND	ND	ND
Roaster[g] (SCC 3-02-017-17)	ND	ND	ND	ND	ND	ND

[a] Process weights used to calculate emission factors include nuts and orchard debris as taken from the field, unless noted. ND = no data. SCC = Source Classification Code.
[b] PM-10 factors are based on particle size fractions found in Reference 1 applied to the filterable PM emission factor for that source. See Reference 3 for a detailed discussion of how these emission factors were developed.
[c] References 1-3,10-11.
[d] Reference 1. Emission factor is for a single air leg/classifier screen deck cyclone. Facilities may contain multiple cyclones.
[e] References 1,9.
[f] Reference 10.
[g] Factors are based on finished product throughputs.

References For Section 9.10.2.1

1. *Report On Tests Of Emissions From Almond Hullers In The San Joaquin Valley*, File No. C-4-0249, California Air Resources Board, Division Of Implementation And Enforcement, Sacramento, CA, 1974.

2. *Proposal To Almond Hullers And Processors Association For Pooled Source Test*, Eckley Engineering, Fresno, CA, December 1990.

3. *Emission Factor Documentation For AP-42 Section 9.10.2, Salted And Roasted Nuts And Seeds,* EPA Contract No. 68-D2-0159, Midwest Research Institute, Cary, NC, May 1994.

4. Jasper Guy Woodroof, *Tree Nuts: Production, Processing Product*, Avi Publishing, Inc., Westport, CT, 1967.

5. Written communication from Darin Lundquist, Central California Almond Growers Association, Sanger, CA, to Dallas Safriet, U. S. Environmental Protection Agency, Research Triangle Park, NC, July 9, 1993.

6. Written communication from Jim Ryals, Almond Hullers and Processors Association, Bakersfield, CA, to Dallas Safriet, U. S. Environmental Protection Agency, Research Triangle Park, NC, July 7, 1993.

7. Written communication from Wendy Eckley, Eckley Engineering, Fresno, CA, to Dallas Safriet, U. S. Environmental Protection Agency, Research Triangle Park, NC, July 7, 1993.

8. Private communications between Wendy Eckley, Eckley Engineering, Fresno, CA, and Lance Henning, Midwest Research Institute, Kansas City, MO, August-September 1992, March 1993.

9. *Almond Huller Baghouse Emissions Tests*, Superior Farms, Truesdail Laboratories, Los Angeles, CA, November 5, 1980.

10. *Emission Testing On Two Baghouses At Harris Woolf California Almonds,* Steiner Environmental, Inc., Bakersfield, CA, October 1991.

11. *Emission Testing On One Baghouse At Harris Woolf California Almonds,* Steiner Environmental, Inc., Bakersfield, CA, October 1992.

9.10.2.2 Peanut Processing

9.10.2.2.1 General

Peanuts (*Arachis hypogaea*), also known as groundnuts or goobers, are an annual leguminous herb native to South America. The peanut peduncle, or peg (the stalk that holds the flower), elongates after flower fertilization and bends down into the ground, where the peanut seed matures. Peanuts have a growing period of approximately 5 months. Seeding typically occurs mid-April to mid-May, and harvesting during August in the United States.

Light, sandy loam soils are preferred for peanut production. Moderate rainfall of between 51 and 102 centimeters (cm) (20 and 40 inches [in.]) annually is also necessary. The leading peanut producing states are Georgia, Alabama, North Carolina, Texas, Virginia, Florida, and Oklahoma.

9.10.2.2.2 Process Description

The initial step in processing is harvesting, which typically begins with the mowing of mature peanut plants. Then the peanut plants are inverted by specialized machines, peanut inverters, that dig, shake, and place the peanut plants, with the peanut pods on top, into windrows for field curing. After open-air drying, mature peanuts are picked up from the windrow with combines that separate the peanut pods from the plant using various thrashing operations. The peanut plants are deposited back onto the fields and the pods are accumulated in hoppers. Some combines dig and separate the vines and stems from the peanut pods in 1 step, and peanuts harvested by this method are cured in storage. Some small producers still use traditional harvesting methods, plowing the plants from the ground and manually stacking them for field curing.

Harvesting is normally followed by mechanical drying. Moisture in peanuts is usually kept below 12 percent, to prevent aflatoxin molds from growing. This low moisture content is difficult to achieve under field conditions without overdrying vines and stems, which reduces combine efficiency (less foreign material is separated from the pods). On-farm dryers usually consist of either storage trailers with air channels along the floor or storage bins with air vents. Fans blow heated air (approximately 35°C [95°F]) through the air channels and up through the peanuts. Peanuts are dried to moistures of roughly 7 to 10 percent.

Local peanut mills take peanuts from the farm to be further cured (if necessary), cleaned, stored, and processed for various uses (oil production, roasting, peanut butter production, etc.). Major process steps include processing peanuts for in-shell consumption and shelling peanuts for other uses.

9.10.2.2.2.1 In-shell Processing -

Some peanuts are processed for in-shell roasting. Figure 9.10.2.2-1 presents a typical flow diagram for in-shell peanut processing. Processing begins with separating foreign material (primarily soil, vines, stems, and leaves) from the peanut pods using a series of screens and blowers. The pods are then washed in wet, coarse sand that removes stains and discoloration. The sand is then screened from the peanuts for reuse. The nuts are then dried and powdered with talc or kaolin to whiten the shells. Excess talc/kaolin is shaken from the peanut shells.

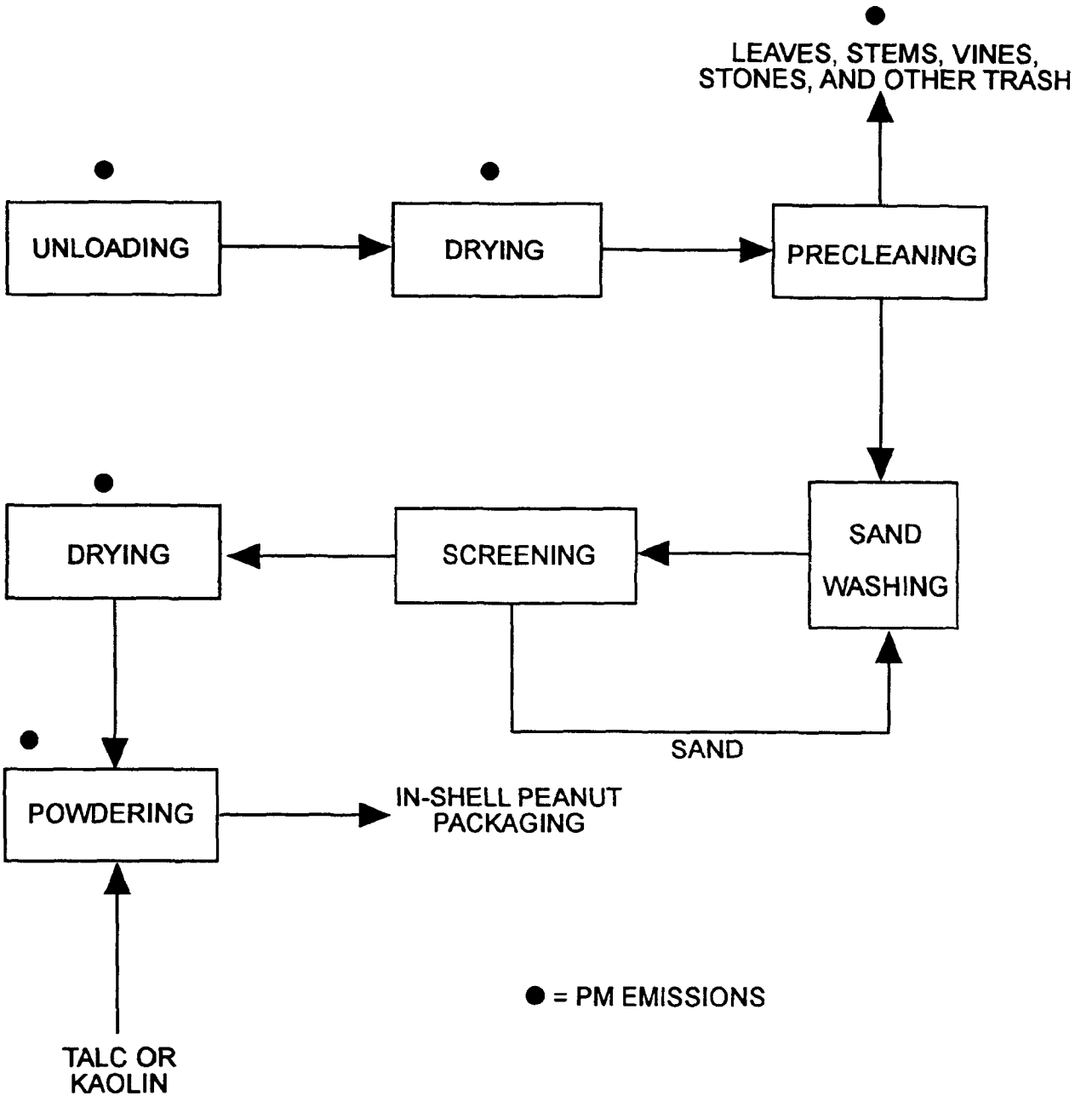

Figure 9.10.2.2-1. Typical in-shell peanut processing flow diagram.

9.10.2.2.2.2 Shelling -

A typical shelled peanut processing flow diagram is shown in Figure 9.10.2.2-2. Shelling begins with separating the foreign material with a series of screens, blowers, and magnets. The cleaned peanuts are then sized with screens (size graders). Sizing is required so that peanut pods can be crushed without also crushing the peanut kernels.

Next, shells of the sized peanuts are crushed, typically by passing the peanuts between rollers that have been adjusted for peanut size. The gap between rollers must be narrow enough to crack the peanut hulls, but wide enough to prevent damage to the kernels. A horizontal drum, with a perforated and ridged bottom and a rotating beater, is also used to hull peanuts. The rotating beater crushes the peanuts against the bottom ridges, pushing both the shells and peanuts through the perforations. The beater can be adjusted for different sizes of peanuts, to avoid damaging the peanut kernels. Shells are aspirated from the peanut kernels as they fall from the drum. The crushed shells and peanut kernels are then separated with oscillating shaker screens and air separators. The separation process also removes undersized kernels and split kernels.

Following crushing and hull/kernel separation, peanut kernels are sized and graded. Sizing and grading can be done by hand, but most mills use screens to size kernels and electric eye sorters for grading. Electric eye sorters can detect discoloration and can separate peanuts by color grades. The sized and graded peanuts are bagged in 45.4-kg (100-lb) bags for shipment to end users, such as peanut butter plants and nut roasters. Some peanuts are shipped in bulk in rail hopper cars.

9.10.2.2.2.3 Roasting -

Roasting imparts the typical flavor many people associate with peanuts. During roasting, amino acids and carbohydrates react to produce tetrahydrofuran derivatives. Roasting also dries the peanuts further and causes them to turn brown as peanut oil stains the peanut cell walls. Following roasting, peanuts are prepared for packaging or for further processing into candies or peanut butter. Typical peanut roasting processes are shown in Figure 9.10-2.2-3. There are 2 primary methods for roasting peanuts, dry roasting and oil roasting.

Dry Roasting -

Dry roasting is either a batch or continuous process. Batch roasters offer the advantage of adjusting for different moisture contents of peanut lots from storage. Batch roasters are typically natural gas-fired revolving ovens (drum-shaped). The rotation of the oven continuously stirs the peanuts to produce an even roast. Oven temperatures are approximately 430°C (800°F), and peanut temperature is raised to approximately 160°C (320°F) for 40 to 60 min. Actual roasting temperatures and times vary with the condition of the peanut batch and the desired end characteristics.

Continuous dry roasters vary considerably in type. Continuous roasting reduces labor, ensures a steady flow of peanuts for other processes (packaging, candy production, peanut butter production, etc.), and decreases spillage. Continuous roasters may move peanuts through an oven on a conveyor or by gravity feed. In one type of roaster, peanuts are fed by a conveyor into a stream of countercurrent hot air that roasts the peanuts. In this system, the peanuts are agitated to ensure that air passes around the individual kernels to promote an even roast.

Dry roasted peanuts are cooled and blanched. Cooling occurs in cooling boxes or on conveyors where large quantities of air are blown over the peanuts immediately following roasting. Cooling is necessary to stop the roasting process and maintain a uniform quality. Blanching removes the skin of the peanut as well as dust, molds, and other foreign material. There are several blanching methods including dry, water, spin, and air impact.

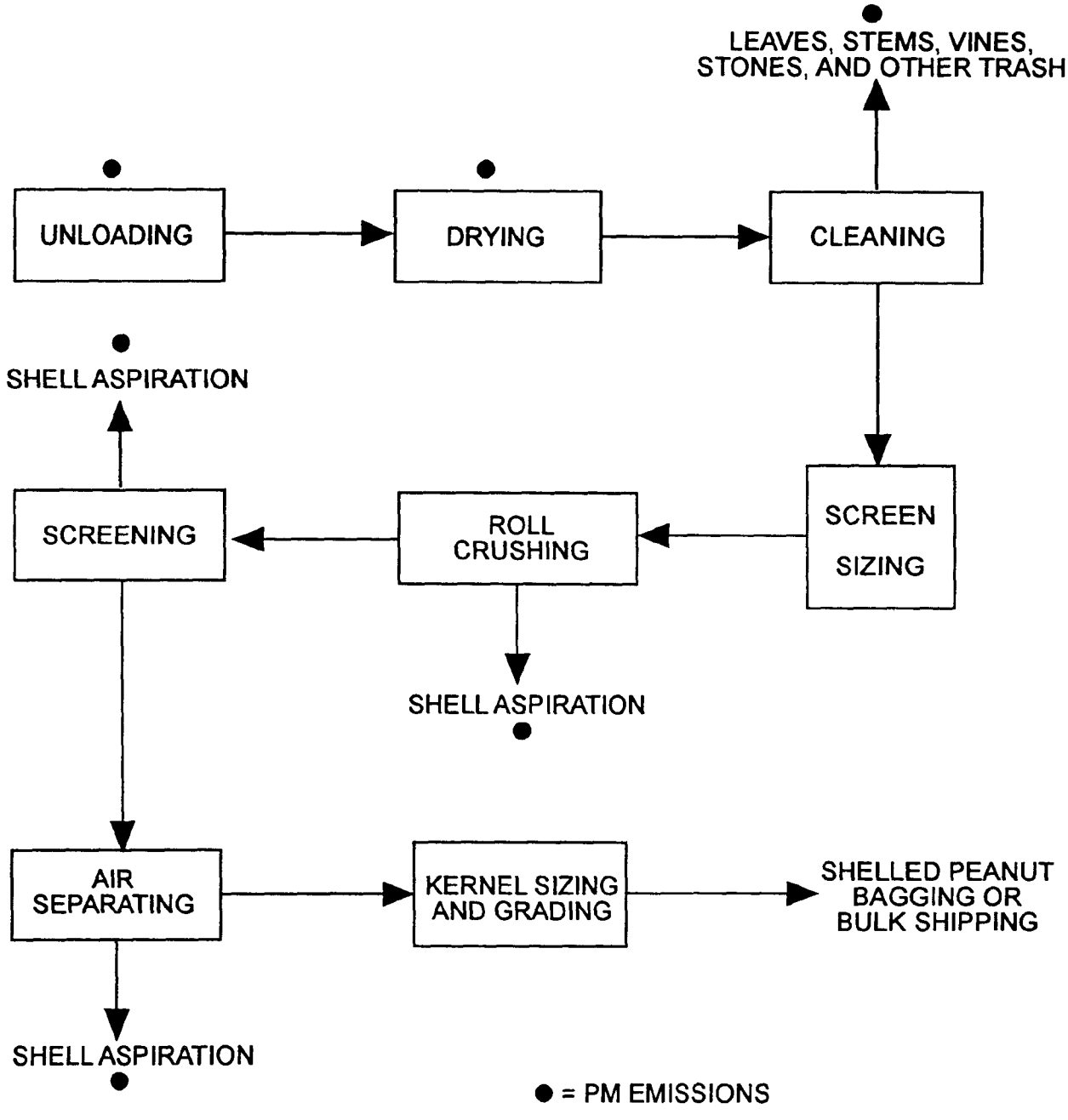

Figure 9.10.2.2-2. Typical shelled peanut processing flow diagram.

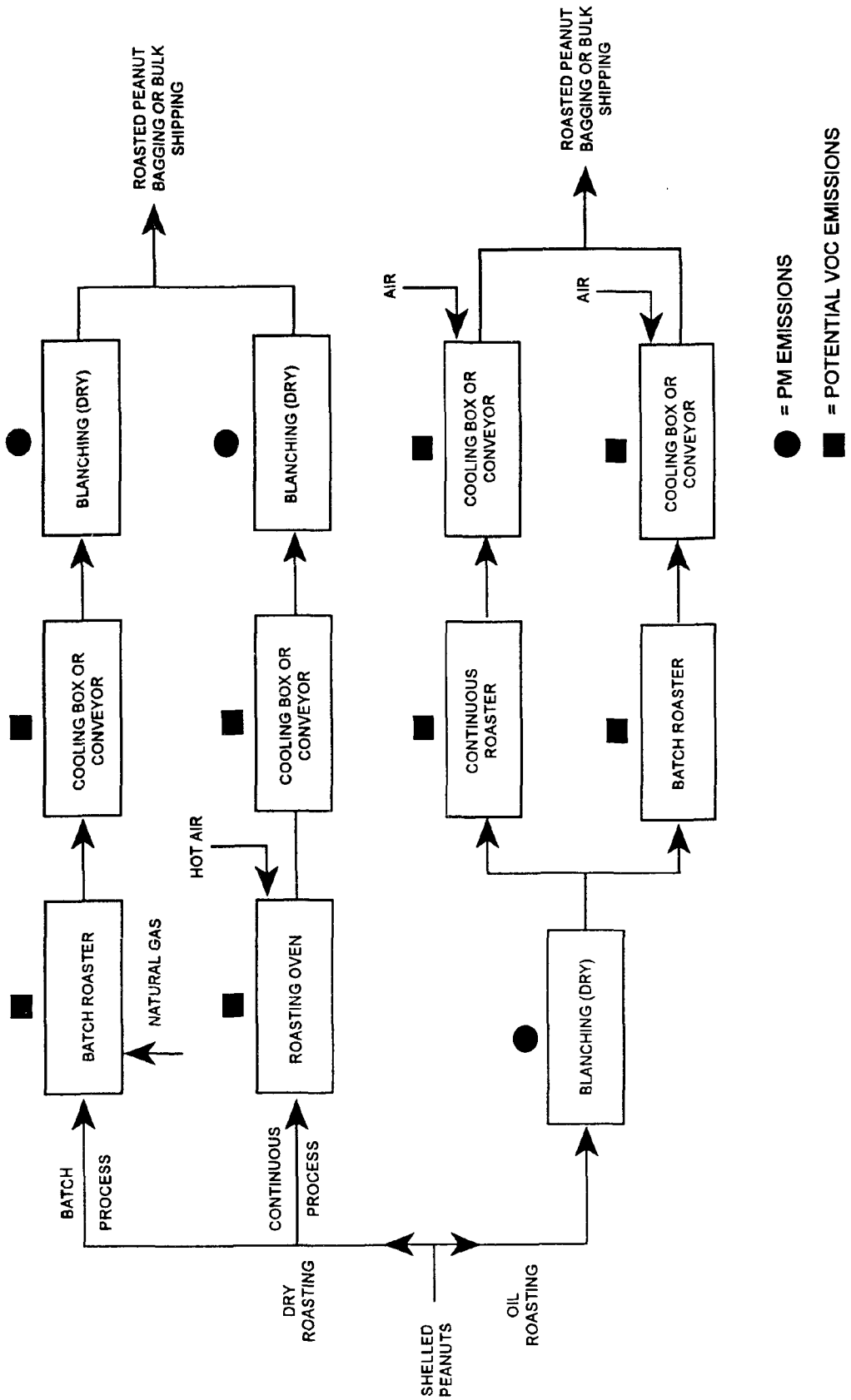

Figure 9.10.2.2-3. Typical shelled peanut roasting flow diagram.

Dry blanching is used primarily in peanut butter production, because it removes the kernel hearts which affect peanut butter flavor. Dry blanching heats the peanuts to approximately138°C (280°F) for 25 minutes to crack and loosen the skins. The heated peanuts are then cooled and passed through either brushes or ribbed rubber belting to rub off the skins. Screening is used to separate the hearts from the cotyledons (peanut halves).

Water blanching passes the peanuts on conveyors through stationary blades that slit the peanut skins. The skins are then loosened with hot water sprayers and removed by passing the peanuts under oscillating canvas-covered pads on knobbed conveyor belts. Water blanching requires drying the peanuts back to a moisture content of 6 to 12 percent.

Spin blanching uses steam to loosen the skins of the peanuts. Steaming is followed by spinning the peanuts on revolving spindles as the peanuts move, single file, down a grooved conveyor. The spinning unwraps the peanut skins.

Air impact blanching uses a horizontal drum (cylinder) in which the peanuts are placed and rotated. The inner surface of the drum has an abrasive surface that aids in the removal of the skins as the drum rotates. Inside the drum are air jets that blow the peanuts counter to the rotation of the drum creating air impact which loosens the skin. The combination of air impacts and the abrasive surface of the drum results in skin removal. Either batch or continuous air impact blanching can be conducted.

Oil Roasting -

Oil roasting is also done on a batch or continuous basis. Before roasting, the peanuts are blanched to remove the skins. Continuous roasters move the peanuts on a conveyor through a long tank of heated oil. In both batch and continuous roasters, oil is heated to temperatures of 138 to 143°C (280 to 290°F), and roasting times vary from 3 to 10 minutes depending on desired characteristics and peanut quality. Oil roaster tanks have heating elements on the sides to prevent charring the peanuts on the bottom. Oil is constantly monitored for quality, and frequent filtration, neutralization, and replacement are necessary to maintain quality. Coconut oil is preferred, but oils such as peanut and cottonseed are frequently used.

Cooling also follows oil roasting, so that a uniform roast can be achieved. Cooling is achieved by blowing large quantities of air over the peanuts either on conveyors or in cooling boxes.

9.10.2.2.3 Emissions And Controls

No information is currently available on emissions or emission control devices for the peanut processing industry. However, the similarities of some of the processes to those in the almond processing industry make it is reasonable to assume that emissions would be comparable. No data are available, however, to make any comparisons about relative quantities of these emissions.

Reference For Section 9.10.2.2

1. Jasper Guy Woodroof, *Peanuts: Production, Processing, Products*, 3rd Edition, Avi Publishing Company, Westport, CT, 1983.

9.11 Fats And Oils

[Work In Progress]

9.11.1 Vegetable Oil Processing

9.11.1.1 General[1-5]

The industry group producing fats and oils includes cottonseed oil mills, soybean oil mills, vegetable oil mills (other than corn, cottonseed, and soybean), and other mills. Wet corn mills are the primary producers of corn oil. Approximately 137 vegetable oil plants operate in the United States. Soybean processing, which dominates the industry, produces approximately 80 percent of the volume of vegetable oil and is concentrated in the states of Iowa, Illinois, Missouri, Kansas, Indiana, and Minnesota, but also found across the nation. Likewise, wet corn mills are concentrated in Corn Belt states. Cottonseed oil mills are found in southern states and California.

9.11.1.2 Process Description[6-9]

The following process description discusses only soybean oil manufacture, because emission factors are available only for that activity. Corn, cottonseed, and peanut oil processing are similar to soybean processing, except for differences in the soybean preparation for oil extraction. The process for soybeans typically consists of five steps: oilseed handling/elevator operations, preparation of soybeans for solvent extraction, solvent extraction and oil desolventizing, flake desolventizing, and oil refining.

Oilseed Handling/Elevator Operations -

Figure 9.11.1-1 is a schematic diagram of a typical soybean handling/elevator operation that precedes the preparation of soybeans for the solvent extraction process.

Soybeans received at the facility by truck or rail are sampled and analyzed for moisture content, foreign matter, and damaged seeds. Then the beans are weighed and conveyed to large concrete silos or metal tanks for storage prior to processing. When the facility is ready to process the soybeans, the beans are removed from the silo or tank and cleaned of foreign materials and loose hulls. Screens typically are used to remove foreign materials such as sticks, stems, pods, tramp metal, sand, and dirt. An aspiration system is used to remove loose hulls from the soybeans; these hulls may be combined later with hulls from the dehulling aspiration step. The beans are passed through dryers to reduce their moisture content to approximately 10 to 11 percent by weight and then are conveyed to process bins for temporary storage and tempering for 1 to 5 days in order to facilitate dehulling.

Preparation Of Soybeans For Solvent Extraction -

Figure 9.11.1-2 is a schematic diagram of the process used to prepare soybeans for the solvent extraction process. The process, which is fairly well standardized, consists of four principal operations: cracking, dehulling/hull removal, conditioning, and flaking.

Soybeans are conveyed from the process bins to the mill by means of belts or mass flow conveyors and bucket elevators. In the mill, the beans may be aspirated again, weighed, cleaned of tramp metal by magnets, and fed into corrugated cracking rolls. The cracking rolls "crack" each bean into four to six particles, which are passed through aspirators to remove the hulls (processed separately after the removal of residual bean chips). These hulls may be combined with the hulls from the grain cleaning step.

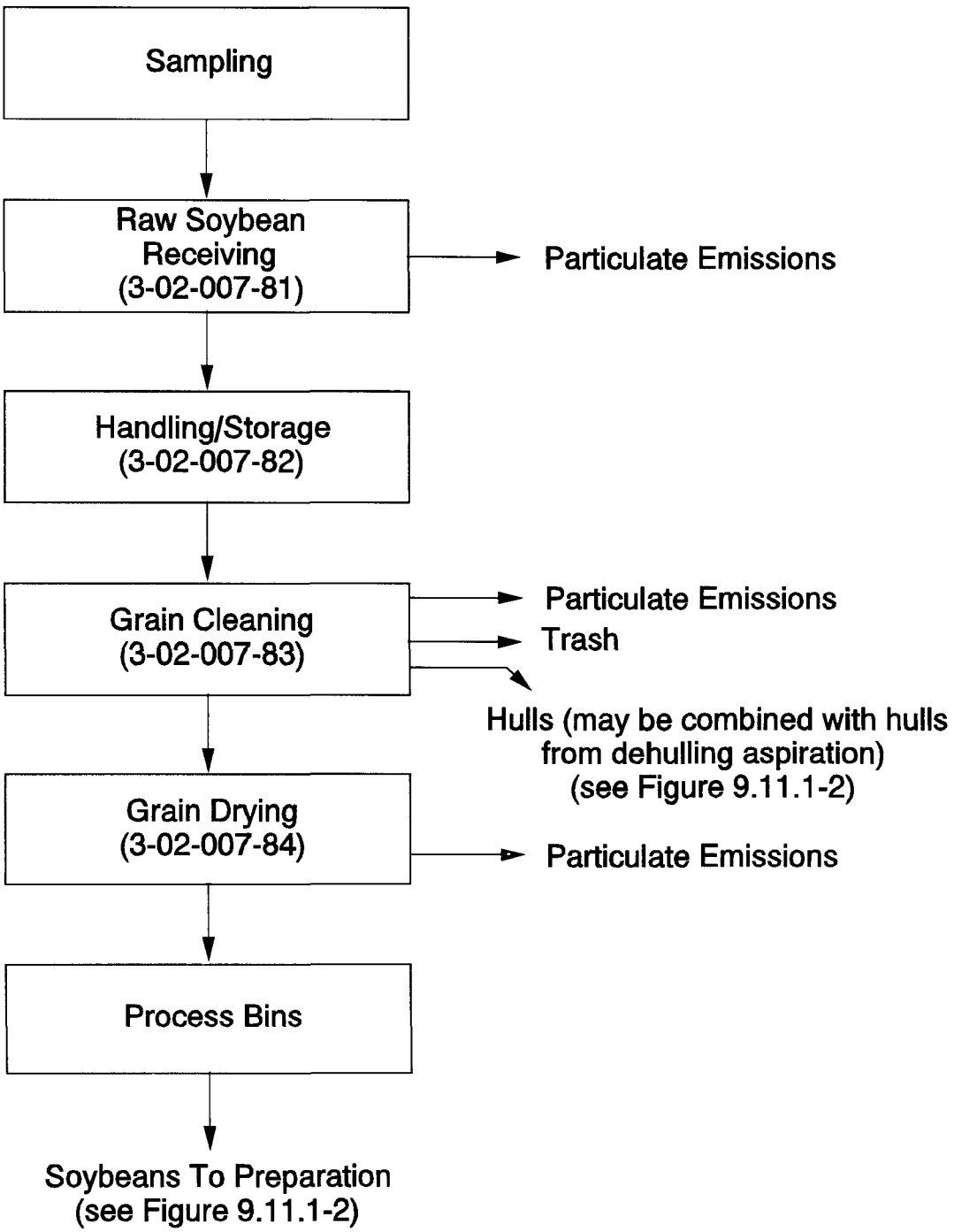

Figure 9.11.1-1. Flow diagram of typical soybean handling/elevator operations. (Source Classification Codes in parentheses.)

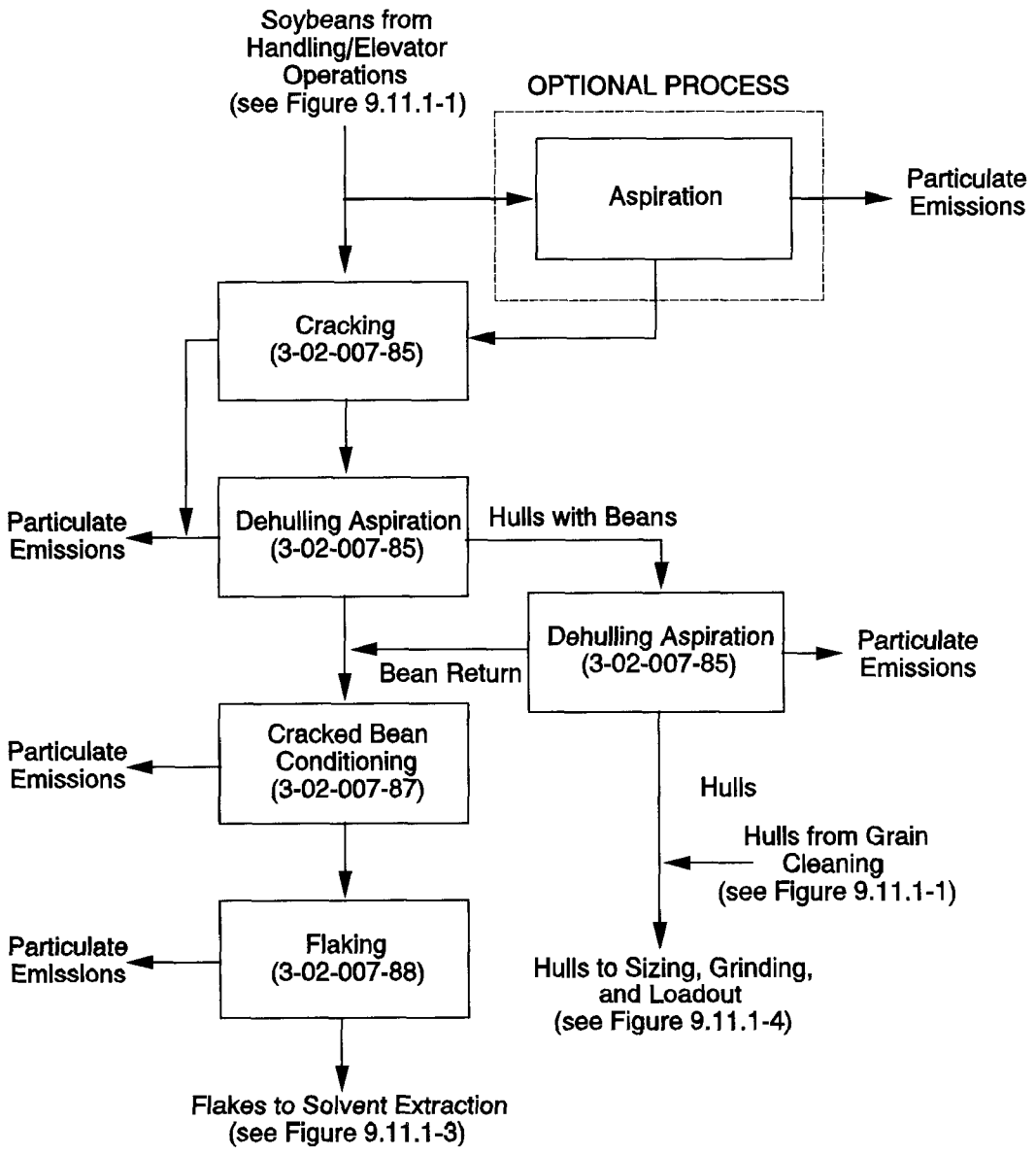

Figure 9.11.1-2. Flow diagram of the typical process for preparing soybeans for solvent extraction. (Source Classification Codes in parentheses.)

Next, the cracked beans and bean chips are conveyed to the conditioning area, where they are put either into a rotary steam tubed device or into a stacked cooker and are heated to "condition" them (i. e., make them pliable and keep them hydrated). Conditioning is necessary to permit the flaking of the chips and to prevent their being broken into smaller particles. Finally, the heated, cracked beans are conveyed and fed to smooth, cylindrical rolls that press the particles into smooth "flakes", which vary in thickness from approximately 0.25 to 0.51 millimeters (0.010 to 0.020 inches). Flaking allows the soybean oil cells to be exposed and the oil to be more easily extracted.

Solvent Extraction and Oil Desolventizing -

The extraction process consists of "washing" the oil from the soybean flakes with hexane solvent in a countercurrent extractor. Then the solvent is evaporated (i. e., desolventized) from both the solvent/oil mixture (micella) and the solvent-laden, defatted flakes (see Figure 9.11.1-3). The oil is desolventized by exposing the solvent/oil mixture to steam (contact and noncontact). Then the solvent is condensed, separated from the steam condensate, and reused. Residual hexane not condensed is removed with mineral oil scrubbers. The desolventized oil, called "crude" soybean oil, is stored for further processing or loadout.

Desolventizing Flakes -

The flakes leaving the extractor contain up to 35 to 40 percent solvent and must be desolventized before use. Flakes are desolventized in one of two ways: either "conventional" desolventizing or specialty or "flash" desolventizing. The method used depends upon the end use of the flakes. Flakes that are flash desolventized are typically used for human foods, while conventionally desolventized flakes are used primarily in animal feeds.

Conventional desolventizing takes place in a desolventizer-toaster (DT), where both contact and noncontact steam are used to evaporate the hexane. In addition, the contact steam "toasts" the flakes, making them more usable for animal feeds. The desolventized and toasted flakes then pass to a dryer, where excess moisture is removed by heat, and then to a cooler, where ambient air is used to reduce the temperature of the dried flakes. The desolventized, defatted flakes are then ground for use as soybean meal (see Figure 9.11.1-4).

Flash desolventizing is a special process that accounts for less than 5 percent by volume of the annual nationwide soybean crush. The production of flakes for human consumption generally follows the flow diagram in Figure 9.11.1-3 for the "conventional" process, except for the desolventizing step. In this step, the flakes from the oil extraction step are "flash" desolventized in a vacuum with noncontact steam or superheated hexane. This step is followed by a final solvent stripping step using steam. Both the hexane vapor from the flash/vacuum desolventizer and the hexane and steam vapors from the stripper are directed to a condenser. From the condenser, hexane vapors pass to the mineral oil scrubber and the hexane-water condensate goes to the separator, as shown in Figure 9.11.1-3. The flakes produced by the flash process are termed "white flakes". A process flow diagram for the flash desolventizing portion of the soybean process is shown in Figure 9.11.1-5. From the stripper, the white flakes pass through a cooker (an optional step) and a cooler prior to further processing steps similar to the "conventional" process. A plant that uses specialty or "flash" desolventizing requires different equipment and is far less efficient in energy consumption and solvent recovery than a plant that uses conventional desolventizing. Given these facts, solvent emissions are considerably higher for a specialty desolventizing process than for a similar-sized conventional desolventizing process.

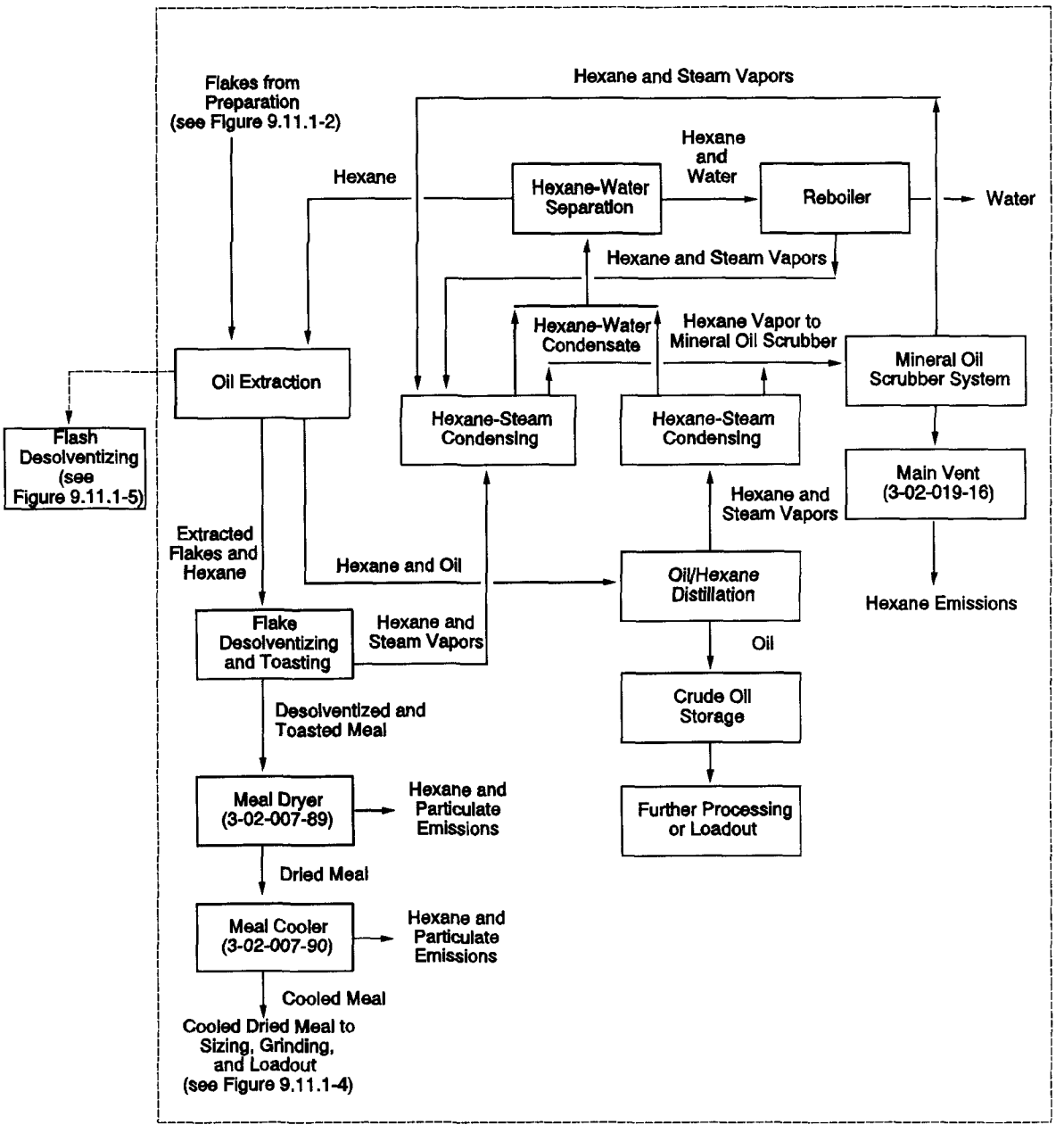

Soybean Extraction Facility--Total Hexane Losses
(3-02-019-97)
(3-02-019-98)

Figure 9.11.1-3. Flow diagram of the "conventional" solvent extraction process. (Source Classification Codes in parentheses.)

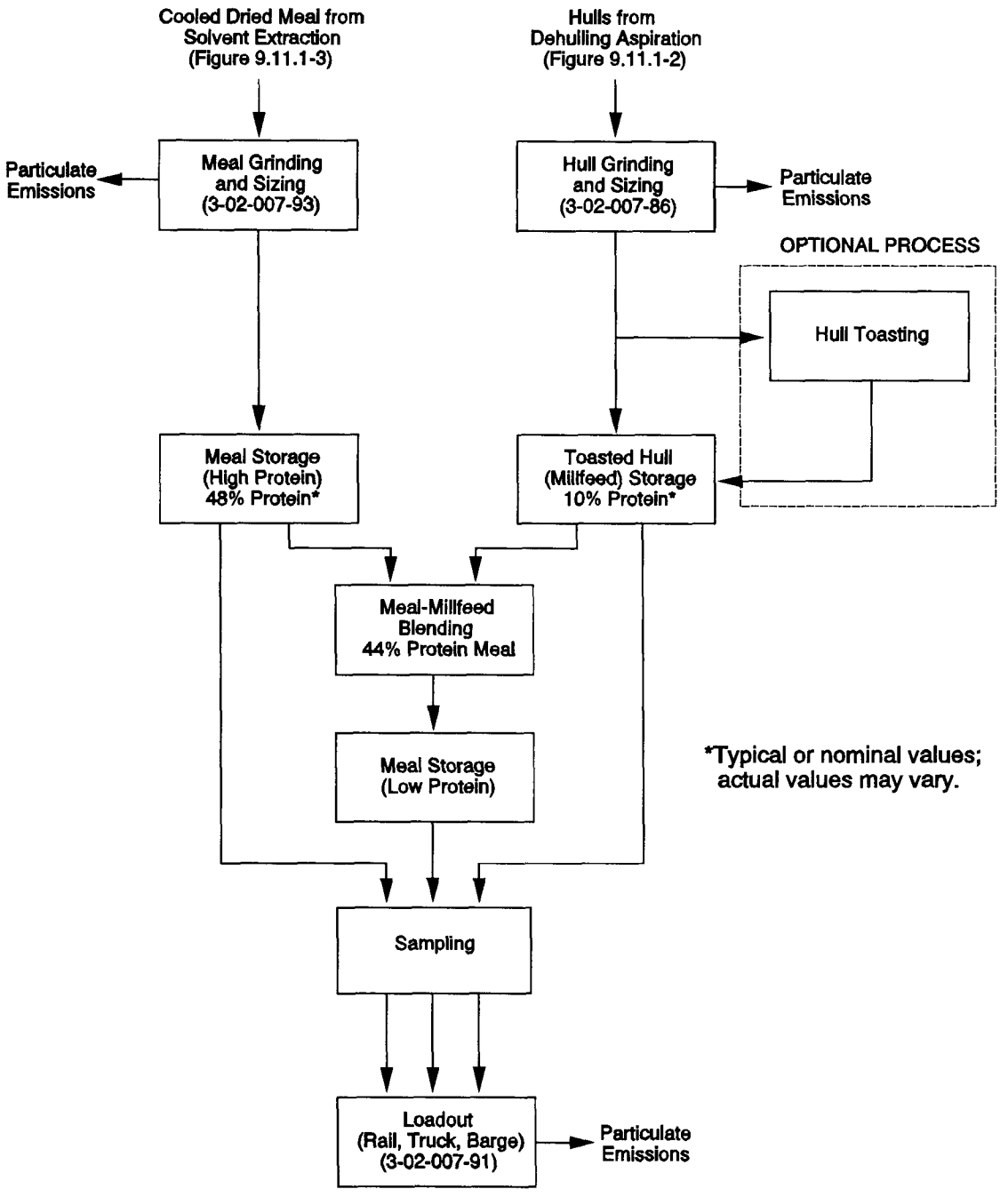

Figure 9.11.1-4. Flow diagram for "conventional" process of dry material sizing, grinding, and loadout.
(Source Classification Codes in parentheses.)

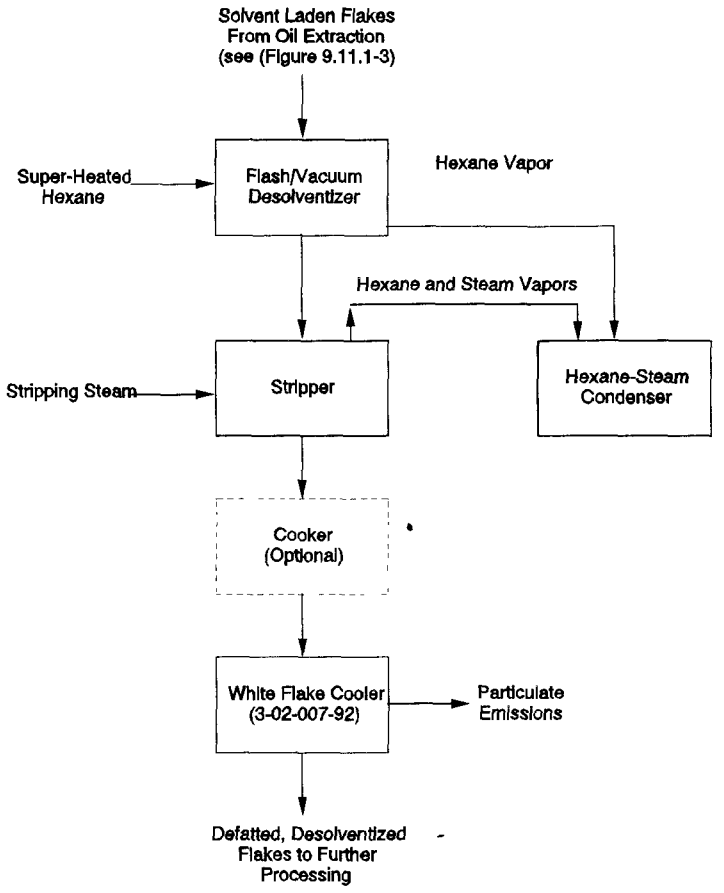

Figure 9.11.1-5. Flow diagram of the flash desolventizing process.
(Source Classification Code in parentheses.)

Vegetable Oil Refining -

Crude oil is typically shipped for refining to establishments engaged in the production of edible vegetable oils, shortening, and margarine. Crude vegetable oils contain small amounts of naturally occurring materials such as proteinaceous material, free fatty acids, and phosphatides. Phosphatides are removed for lecithin recovery or to prepare the crude oil for export. The most common method of refining oil is by reacting it with an alkali solution which neutralizes the free fatty acids and reacts with the phosphatides. These reacted products and the proteinaceous materials are then removed by centrifuge. Following alkali refining, the oil is washed with water to remove residual soap, caused by saponification of small amounts of the triglycerides (oil). Color-producing substances within an oil (i. e., carotenoids, chlorophyll) are removed by a bleaching process, which employs the use of adsorbents such as acid-activated clays. Volatile components are removed by deodorization, which uses steam injection under a high vacuum and temperature. The refined oil is then filtered and stored until used or transported.

9.11.1.3 Emissions And Controls[6,10-20]

Emissions -

Particulate matter and volatile organic compounds are the principal emissions from vegetable oil processing. Particulate matter (PM) results from the transfer, handling, and processing of raw seed. VOC emissions are the oil extraction solvent, hexane, which is classified as a hazardous air pollutant. Particulate emissions from grain handling are discussed in the Interim AP-42 Section 9.9.1, "Grain Elevators And Processes".

Solvent emissions arise from several sources within vegetable oil processing plants. There are potential solvent emissions from the transfer and storage of hexane on site as well as potential leaks from piping and vents. Small quantities of solvent (up to 0.2 percent by volume of oil) are present in the crude vegetable oil after the solvent is recovered by film evaporators and the distillation stripper. This hexane may volatilize during the oil-refining process; however, no emission data are available. Trace quantities of solvent are present and available for volatilization in waste water collected from the condensation of steam used in the distillation stripper and desolventizer-toaster. Emission data from waste water also are not available.

Vents are another source of emissions. Solvent is discharged from three vents: the main vent from the solvent recovery section, the vent from the meal dryer, and the vent from the meal cooler. The main vent receives gases from the oil extractor, the film evaporator and distillation stripper, and the desolventizer-toaster. Vents for the meal dryer and meal cooler typically vent to atmosphere.

Hexane Emissions -

The recommended method for estimating annual hexane emissions from soybean solvent extraction facilities is to obtain the annual hexane usage from the specific plant's records, and to assume that all hexane make-up is due to losses to the air (SCC 3-02-019-97). (Some hexane leaves the facilities as a small fraction of the oil or meal products, but this amount has not been quantified.) If the hexane usage is determined from purchase records and the purchased amount accounts for any change in quantities stored on-site, then storage tank losses would already be accounted for in the loss estimate. If the usage is determined from the amount metered out of the storage tanks, then the storage tank losses should be calculated separately, and in addition to, the usage losses, using the equations in AP-42 Chapter 7 or in the TANKS software. Careful application of such a material balance approach should produce emission estimates comparable in quality to those derived from a B-rated emission factor.

The mean total hexane loss reported by the plants in References 11 through 19 was 3.3 L/Mg (0.89 gal/ton [4.9 lb/ton]) of raw soybeans processed (SCC 3-02-019-98). This represents an overall total loss factor for soybean oil processing, encompassing all sources of vented and fugitive emissions (and storage tanks), as well as any hexane leaving the facility as part of the oil or meal products. For a new facility or if plant-specific usage data are unavailable, this factor, rated D, can be used as a default value until the relevant data for the facility become available. The default value should be used only until the facility can compile the data needed to develop a plant-specific hexane loss for the period of interest.

Particulate Emissions -

Table 9.11.1-1 presents emission factors for total PM emissions resulting from handling and processing soybeans in vegetable oil manufacturing. Emission factors are provided for PM-generating processes for the meal production process, including meal drying and cooling.

Table 9.11.1-1. TOTAL PARTICULATE EMISSION FACTORS FOR SOYBEAN MILLING[a]

EMISSION FACTOR RATING: E

Process	Control Device	Emission Factor (lb/ton)[b]
Receiving[c] (SCC 3-02-007-81)	None	0.15
Handling (SCC 3-02-007-82)	ND	ND
Cleaning (SCC 3-02-007-83)	ND	ND
Drying (SCC 3-02-007-84)	ND	ND
Cracking/dehulling (SCC 3-02-007-85)	Cyclone	0.36
Hull grinding (SCC 3-02-007-86)	Cyclone	0.20
Bean conditioning (SCC 3-02-007-87)	Cyclone	0.010
Flaking rolls (SCC 3-02-007-88)	Cyclone	0.037
White flake cooler (SCC 3-02-007-92)	Cyclone	0.95
Meal cooler (SCC 3-02-007-90)	Cyclone	0.19
Meal dryer (SCC 3-02-007-89)	Cyclone	0.18
Meal grinder/sizing (SCC 3-02-007-93)	Cyclone	0.34
Meal loadout[d] (SCC 3-02-007-91)	None	0.27

[a] Emission factors are based on pounds per ton of soybeans processed by the unit. Factors represent controlled emissions, except as noted. Divide the lb/ton factor by two to obtain kg/Mg. SCC = Source Classification Code, ND = No Data.

[b] Reference 21. These data were obtained from unpublished emission test data and from industry questionnaires. Because these are secondary data, the test data and the questionnaire results were weighed equally and the emission factors were calculated as arithmetic means of the data. The emission factor rating is a reflection of the source of the data.

[c] See Interim AP-42 Section 9.9.1, "Grain Elevators And Processes".

[d] Reference 22.

Controls -

Hexane is recovered and reused in the oil-extraction process because of its cost. The steam and hexane exhausts from the solvent extractor, desolventizer-toaster, and oil/hexane stripping are passed through condensers to recover hexane. Residual hexane from the condensers is captured by mineral oil scrubbers. The most efficient recovery or control device is a mineral oil scrubber (MOS), which is approximately 95 percent efficient. The meal dryer and cooler vents are typically exhausted to the atmosphere with only cyclone control to reduce particulate matter. Process controls to reduce breakdowns and leaks can be used effectively to reduce emissions. Quantities of hexane may be lost through storage tanks, leaks, shutdowns, or breakdowns. These losses are included in the material balance.

References for Section 9.11.1

1. P. T. Bartlett, *et al.*, *National Vegetable Oil Processing Plant Inventory*, TRC Environmental Consultants Inc., Wethersfield, CT, April 1980.

2. J. M. Farren, *et al.*, *U. S. Industrial Outlook '92*, U. S. Department Of Commerce, Washington, DC, 1992.

3. *1987 Census Of Manufactures: Fats And Oils*, U. S. Department Of Commerce, Bureau Of Census, Washington, DC, 1988.

4. *Corn Annual 1992*, Corn Refiners Association Inc., Washington, DC, 1992.

5. *95-96 Soya Bluebook Plus - Annual Directory Of The World Oilseed Industry*, Soyatech, Inc., Bar Harbor, ME; data supplied by the National Oilseed Processors Association, September 1995.

6. *Control Of Volatile Organic Emissions From Manufacture Of Vegetable Oils*, EPA-450/2-78-035, U. S. Environmental Protection Agency, Research Triangle Park, NC, June 1978.

7. *Test Method For Evaluation Of Hexane Emissions From Vegetable Oil Manufacturing*, PEDCo Environmental Inc., Cincinnati, OH, April 1979.

8. Written communication from D. C. Ailor, Director Of Regulatory Affairs, National Oilseed Processors Association, Washington, DC, to D. Reisdorph, Midwest Research Institute, Kansas City, MO, September 20, 1992.

9. *Emission Factor Documentation For AP-42, Section 9.11.1, Vegetable Oil Processing*, Midwest Research Institute, Kansas City, MO, November 1995.

10. R. L. Chessin, "Investigating Sources Of Hexane Emissions", *Oil Mill Gazetteer*, *86*(2):35-36, 38-39, August 1981.

11. *Vegetable Oil Production (Meal Processing) Emission Test Report, Cargill Incorporated (East Plant), Cedar Rapids, Iowa*, PEDCo Environmental Inc., Cincinnati, OH, June 1979.

12. *Vegetable Oil Production (Meal Processing) Emission Test Report, Cargill Incorporated (West Plant), Cedar Rapids, Iowa*, PEDCo Environmental Inc., Cincinnati, OH, June 1979.

13. *Vegetable Oil Production (Meal Processing) Emission Test Report, AGRI Industries, Mason City, Iowa*, PEDCo Environmental Inc., Cincinnati, OH, June 1979.

14. *Vegetable Oil Production (Meal Processing) Emission Test Report, Cargill Incorporated, Fayetteville, North Carolina*, PEDCo Environmental Inc., Cincinnati, OH, July 1979.

15. *Vegetable Oil Manufacturing Emission Test Report, Central Soya Inc., Delphos, Ohio*, EMB Report 78-VEG-4, Office of Air Quality Planning and Standards, U. S. Environmental Protection Agency, Research Triangle Park, NC, July 1979.

16. *Vegetable Oil Production (Meal Processing) Emission Test Report, MFA Soybeans, Mexico, Missouri*, PEDCo Environmental Inc., Cincinnati, OH, July 1979.

17. *Vegetable Oil Production (Meal Processing) Emission Test Report, Cargill Incorporated, Sidney, Ohio*, PEDCo Environmental Inc., Cincinnati, OH, July 1979.

18. *Vegetable Oil Production (Meal Processing) Emission Test Report, Ralston Purina Company, Memphis, Tennessee*, PEDCo Environmental Inc., Cincinnati, OH, August 1979.

19. *Vegetable Oil Production (Meal Processing) Emission Test Report, Ralston Purina Company, Bloomington, Illinois*, PEDCo Environmental Inc., Cincinnati, OH, August 1979.

20. "Liquid Storage Tanks", in *Compilation Of Air Pollutant Emission Factors, Volume I: Stationary Point And Area Sources*, AP-42, U. S. Environmental Protection Agency, Research Triangle Park, NC, January 1995.

21. *Emissions Control In The Grain And Feed Industry, Volume I - Engineering And Cost Study*, EPA-450/3-73-003a, U. S. Environmental Protection Agency, Research Triangle Park, NC, December 1973.

22. "Grain Elevators And Processing Plants", in *Supplement B To Compilation Of Air Pollutant Emission Factors, Volume I: Stationary Point And Area Sources*, AP-42, U. S. Environmental Protection Agency, Research Triangle Park, NC, September 1988.

9.12 Beverages

9.12.1 Malt Beverages

9.12.2 Wines And Brandy

9.12.3 Distilled And Blended Liquors

9.12.1 Malt Beverages

9.12.1.1 Process Description[1-4]

The production of malt beverages, or beer, comprises four main stages: brewhouse operations, fermentation, aging or secondary fermentation, and packaging. Figures 9.12.1-1, 9.12.1-2, 9.12.1-3, and 9.12.1-4 show the various stages of a typical brewing process, including potential emission points.

Breweries typically purchase malted grain (malt) from malting operations. In the malting process, grain is first soaked in water-filled steeping tanks for softening. After softening, the grain is transferred to germination tanks, in which the grain germinates, typically over a 1-week period. From the germination tanks, the grain enters a kiln, which halts germination by drying the grain. To begin the brewing process, malt (usually barley malt) is transported by truck or rail to a brewery and is conveyed to storage silos. The malt is then ground into malt flour by malt mills and transferred to milled malt hoppers. Many small breweries purchase malt flour (malted and milled grain) from facilities with malt mills. Malt provides the starch-splitting and protein-splitting enzymes that are necessary to convert grain starches into fermentable sugars.

From the milled malt hoppers, the malt, along with hot water, is fed to the mash tun and heated to convert grain starches to fermentable sugars. Some large facilities use high-temperature mashing, which reduces the time required to convert the starches to sugars, but lowers the quantity of fermentable sugars produced. Most breweries use one of the three principal mashing processes; these are: double mashing, decoction, and infusion. Double mashing uses grains other than barley (typically corn and rice) as starch adjuncts. Before being added to the mash tun, the adjunct grains are broken down through cooking in a cereal cooker for about 1 hour at temperatures ranging from 40° to 100°C (104° to 212°F). Some plants do not use cereal cookers, but use additives such as corn syrup that function as adjunct grains. The malt and adjuncts are then mixed and heated in the mash tun. Decoction is a method of boiling portions of the mixture (mash) and adding the boiling portions to the mash tun to raise the overall temperature to about 75°C (167°F). The infusion process mixes the malt with hot water to maintain a uniform temperature (65° to 75°C [149° to 167°F]) until starch conversion is complete. Mixing, heating times, and temperatures vary among breweries. The finished product of mashing is a grain slurry, called mash.

From the mash tun, the mash is pumped to a straining tank called a lauter tun, which separates insoluble grain residues from the mash. The mash enters the lauter tun through a false bottom where the insoluble grain residues are allowed to settle. The grain sediment acts as a filter for the mash as it enters the tank. Various other filter agents, such as polypropylene fibers, are also used. Some large breweries use strainmasters, which are a variation of lauter tuns. The spent grain (brewers grain) from the lauter tun or strainmaster is conveyed to holding tanks, dried (by some breweries), and sold as animal feed. Brewers grain dryers are typically fired with natural gas or fuel oil. The product of the lauter tun is called wort.

The strained wort from the lauter tun is transferred to the brew kettle and is boiled, typically for about 90 to 120 minutes. Boiling stops the starch-to-sugar conversion, sterilizes the wort, precipitates hydrolyzed proteins, concentrates the wort by evaporating excess water, and facilitates chemical changes that affect beer flavor. Hops are added to the wort during the boiling process. Hops are high in iso-α acids, which impart the characteristic bitter flavor to beer. Some breweries

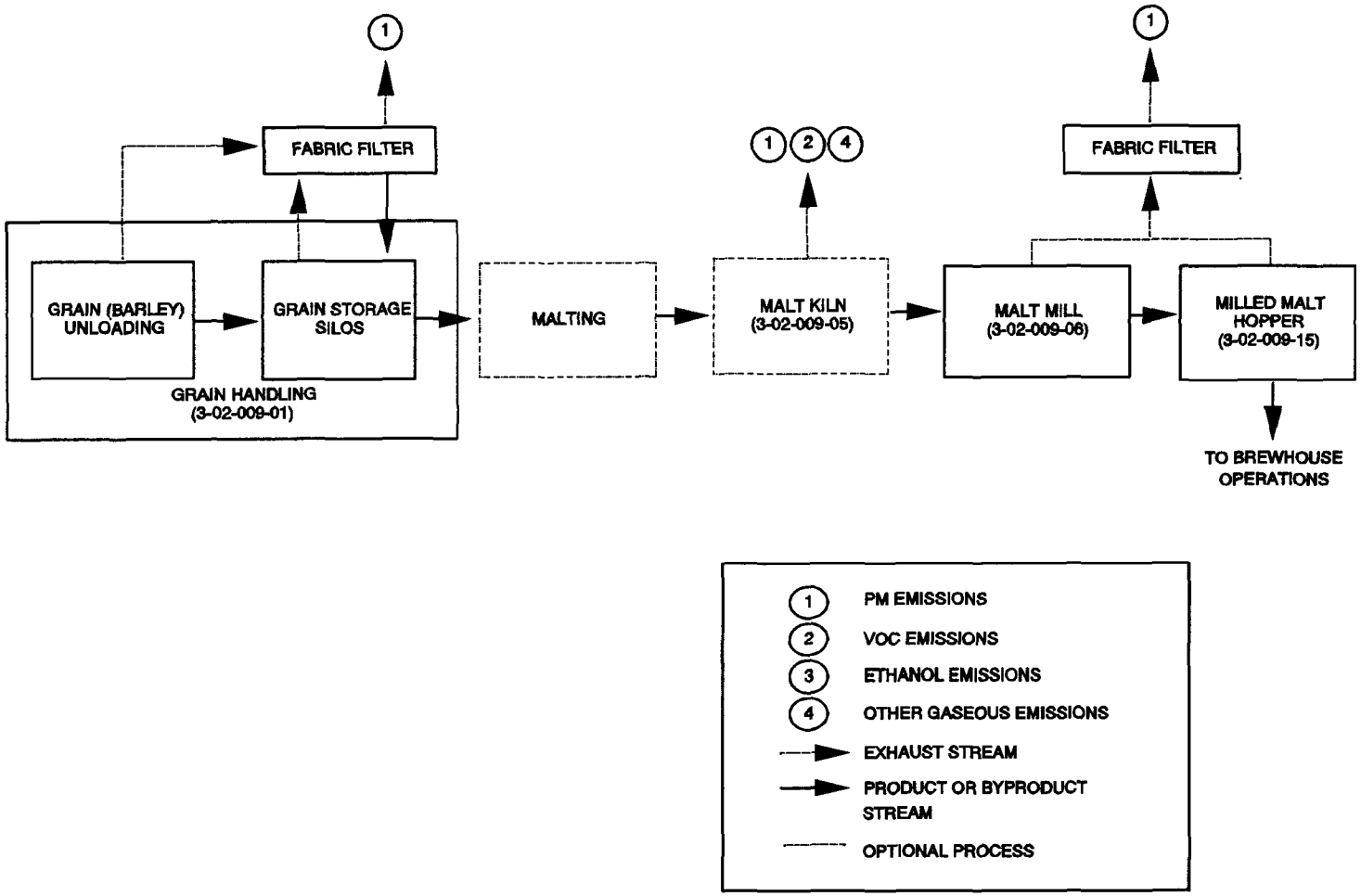

Figure 9.12.1-1. Typical brewery grain handling and malting operations. (Source Classification Codes in parentheses.)

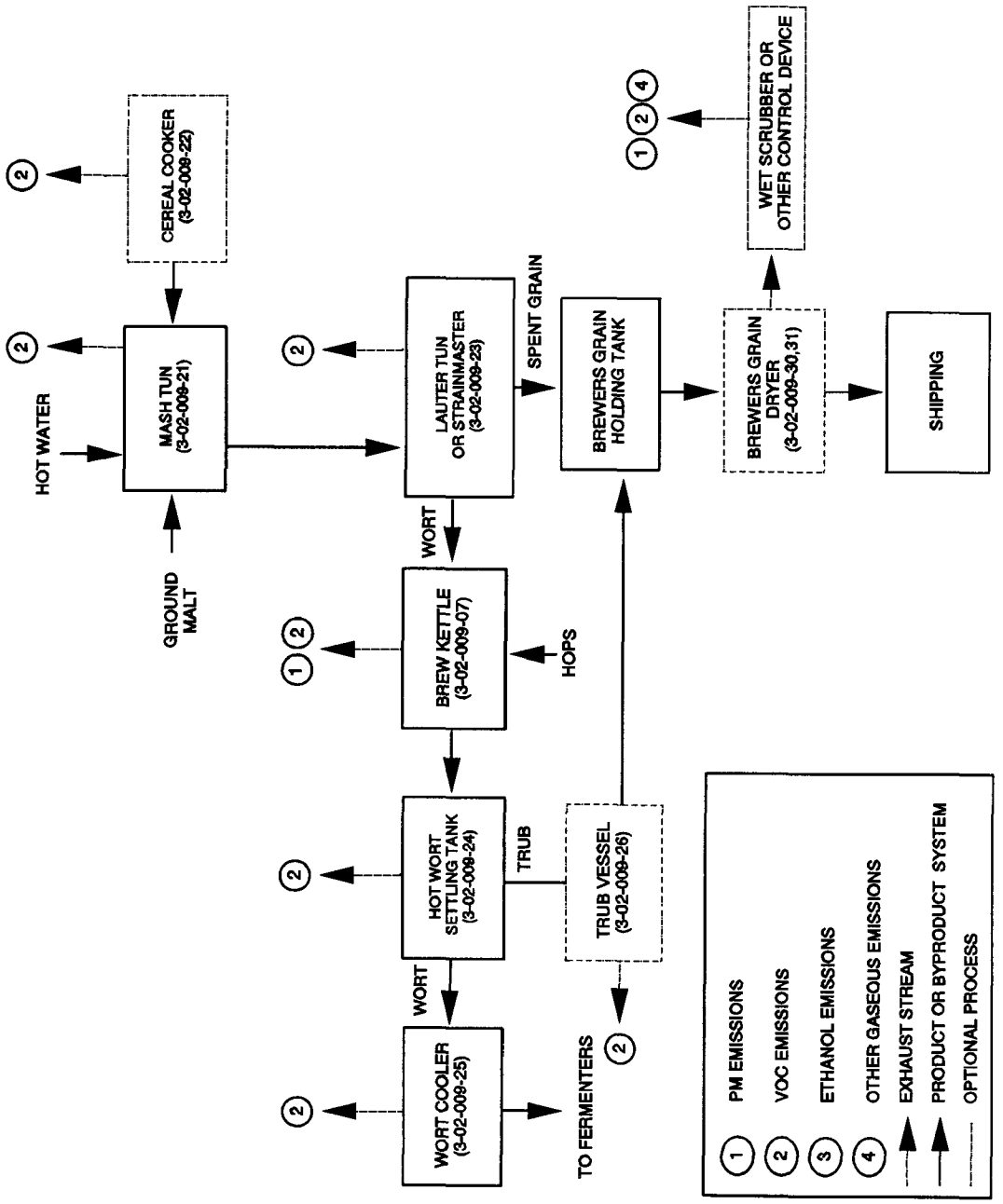

Figure 9.12.1-2. Typical brewhouse operations. (Source Classification Codes in parentheses.)

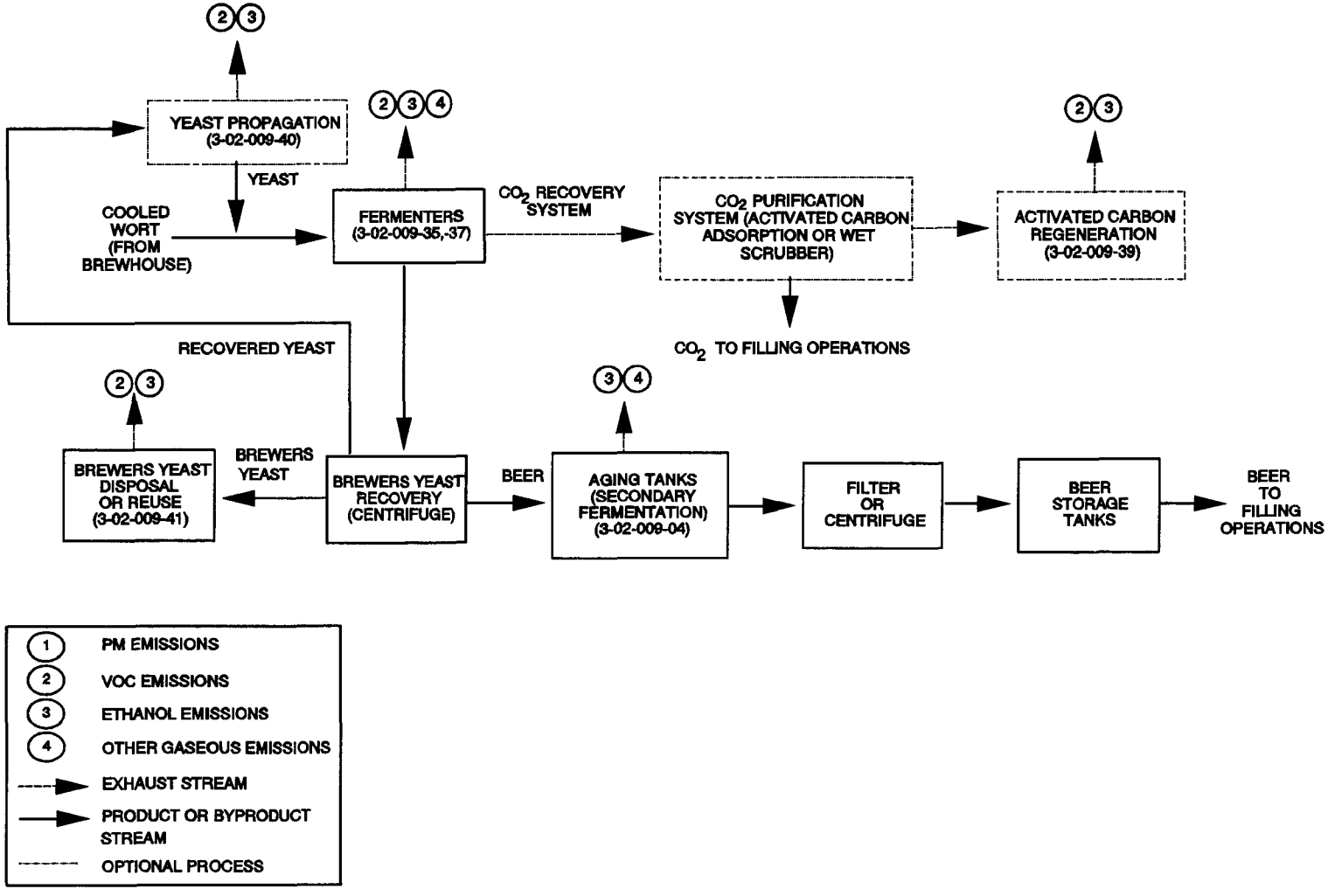

Figure 9.12.1-3. Typical fermentation and post-fermentation brewery operations. (Source Classification Codes in parentheses.)

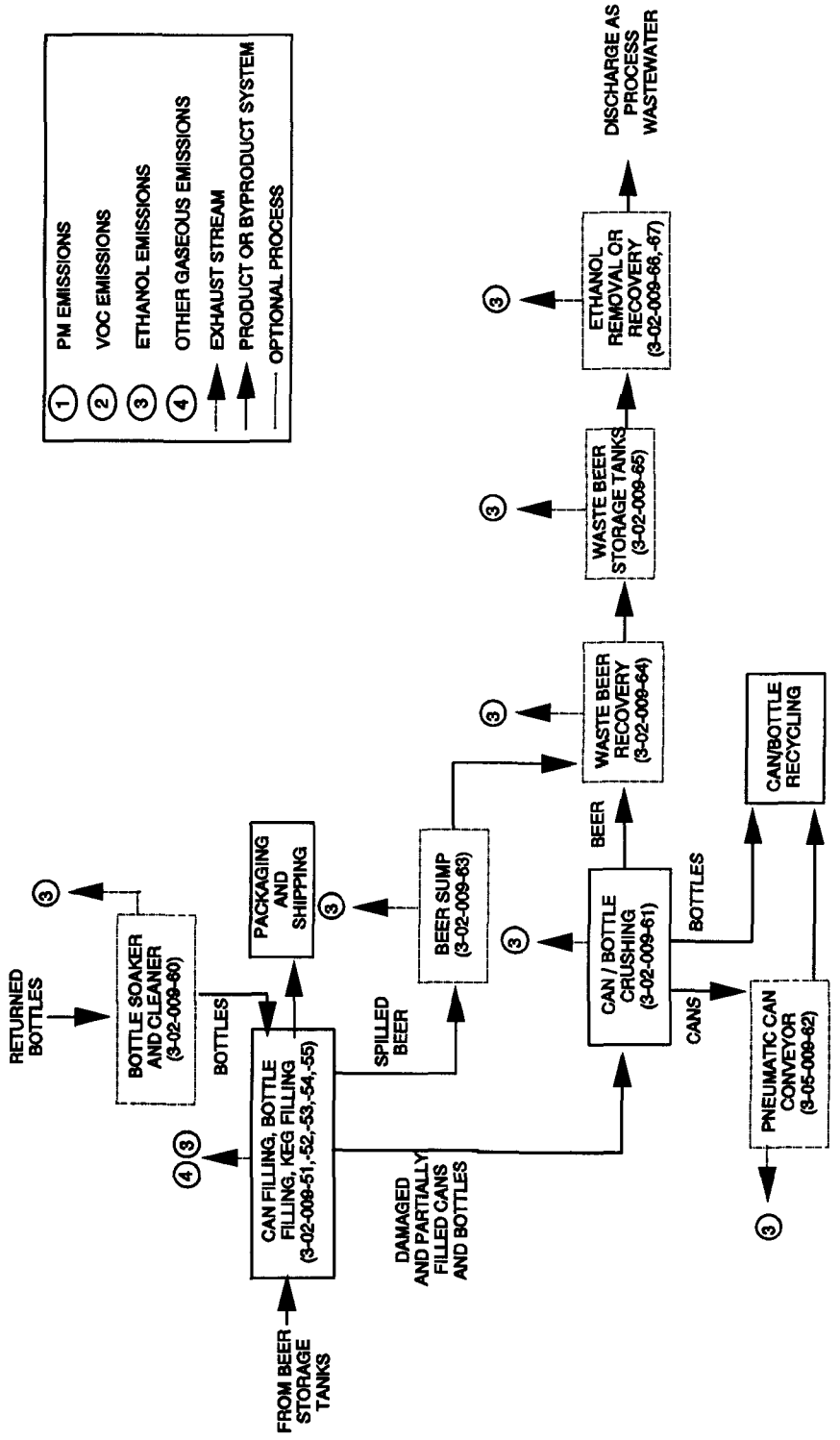

Figure 9.12.1-4. Typical filling room operations. (Source Classification Codes in parentheses.)

add only hop extracts (that contain the desired iso-α acids), and some breweries add hop extracts during or after the fermentation process. After brewing, the hops are strained from the hot wort, and the hot wort is pumped to a large settling tank, where it is held to allow the remaining insoluble material (trub) to settle. The trub is transferred to the spent grain holding tanks. After settling, the hot wort is pumped to a cooling system (typically a closed system), which cools the liquid to temperatures ranging from about 7° to 12°C (44° to 54°F). Following cooling, yeast is added to the cooled wort as it is pumped to the fermenters.

Fermentation takes place in large tanks (fermenters--typically with capacities $\geq$1,000 barrels for medium to large breweries) that can be either open or closed to the atmosphere. Most closed-tank fermenters include CO_2 collection systems, which recover CO_2 for internal use and remove organic impurities from the CO_2; water scrubbers and activated carbon adsorption systems are used to recover impurities. These closed tank fermenters typically vent emissions to the atmosphere (for a specified period of time) until the CO_2 is pure enough to collect. The scrubber water is commonly discharged as process wastewater, and the activated carbon is typically recharged (regenerated) on-site (the impurities are typically vented to the atmosphere).

Fermentation is a biological process in which yeast converts sugars into ethyl alcohol (ethanol), carbon dioxide (CO_2), and water. Yeasts can ferment at either the bottom or the top of the fermenter. *Saccharomyces carlsbergensis* are common bottom-fermenting yeasts used to produce lager beers. Bottom-fermenting yeasts initially rise to the top of the fermenter, but then flocculate to the bottom during rapid fermentation. When fermentation moderates, the beer is run off the top of the fermenter, leaving the bottom-fermenting yeasts at the bottom of the tank. *Saccharomyces cerevisiae* are top-fermenting yeasts commonly used to produce ales, porters, and stout beers. Top-fermenting yeasts rise to the top of the fermenter during rapid fermentation and are skimmed or centrifuged off the top when fermentation moderates. The type of yeast used and the length of the fermentation process vary among breweries and types of beer. Most pilsner beers ferment at temperatures varying from 6° to 20°C (43° to 68°F).

After primary fermentation, waste yeast is typically removed from the liquid (by centrifuges or other means), and the liquid proceeds to a secondary fermentation or aging process. The liquid is pumped to aging tanks, a small quantity of freshly fermenting wort is added (at some breweries), and the mixture is stored at low temperatures (below about 5°C [41°F]).

Several methods are used for the disposal of yeast, including: recovery of viable yeast for reuse in the fermentation process, sale to animal feed processors, distillation to recover residual ethanol, and disposal as process wastewater.

After the beer is aged, solids are typically removed by centrifugation or filtration with diatomaceous earth filters, and the beer is pumped to final storage (beer storage tanks). From final storage, the beer is pumped to the packaging (canning and bottling) facility.

Packaging facilities typically include several canning and bottling lines, as well as a keg filling operation. Most facilities pasteurize beer after canning or bottling, although some facilities package nonpasteurized products using sterile filling lines. Beer that spills during packaging is typically collected by a drainage system, and can be processed to remove or recover ethanol before discharge as process wastewater. Damaged and partially filled cans and bottles are typically collected, crushed, and recycled. Beer from the damaged cans and bottles can be processed to remove or recover ethanol before discharge as industrial sewage. The final steps in the process are labeling, packaging for distribution, and shipping.

Microbreweries typically produce beer for on-site consumption, although some have limited local keg distribution. The beer production process is similar to that of large breweries, although several processes may be excluded or combined. Most microbreweries purchase bags of either malted barley or malt flour for use in beer making. Malt flour requires no processing and is added directly to the mash tun. The facilities that use malted barley typically have a small "cracker" that cracks the grain prior to mashing. Brewhouse operations (mashing, brewers grain settling, brewing, and trub settling) may be combined to decrease the number of tanks required. Fermentation tanks and storage tanks are much smaller than large brewery tanks, with capacities as small as a few barrels. Many microbrews are held in fermentation tanks for three to four weeks (far longer than most mass-produced beers). Canning and bottling operations typically are not found in microbreweries.

9.12.1.2 Emissions And Controls[1-4]

Ethanol is the primary volatile organic compound (VOC) emitted from the production of malt beverages. Aldehydes, ethyl acetate, other VOCs, CO_2, and particulate matter (PM) are also generated and potentially emitted.

Potential VOC emission sources include mash tuns, cereal cookers, lauter tuns or strainmasters, brew kettles, hot wort settling tanks, yeast storage and propagation (see AP-42 Section 9.13.4), fermenters, spent grain holding tanks, activated charcoal regeneration systems (at breweries with CO_2 recovery), aging tanks (sometimes referred to as "ruh" storage tanks), other storage tanks, and packaging operations. The operations that precede fermentation are sources of various species of VOC. Post-fermentation operations emit primarily ethanol; however, small quantities of ethyl acetate and various aldehydes may also be emitted from fermenters and post-fermentation operations. Other VOC that are emitted from cooking processes (mash tuns, hot wort tanks, and brew kettles) may include dimethyl sulfide, C_5-aldehydes, and myrcene (a hop oil emitted from brew kettles).

Fermenters are a source of ethanol, other VOC, and CO_2; large breweries typically recover CO_2 for internal use. However, smaller breweries and microbreweries typically vent CO_2 to the atmosphere.

Potential sources of PM emissions from breweries include grain malting, grain handling and processing operations (see AP-42 Section 9.9.1), brewhouse operations, and spent-grain drying.

Emissions from microbreweries consist of the same pollutants as large brewery emissions. No test data are available to quantify these emissions, but they are expected to be negligible based on the amount of beer produced in these facilities. Emission control devices are not typically used by microbreweries.

Process loss controls are used to reduce emissions from malt beverage production. Add-on emission controls are used to recover CO_2 in the fermentation process and to control PM emissions from grain handling and brewers grain drying. Large breweries typically use CO_2 recovery systems, which can include water scrubbers or activated carbon beds to remove impurities from the CO_2. The scrubber water is typically discharged as process wastewater, and organic impurities collected by the activated carbon beds are typically released to the atmosphere.

Water scrubbers could potentially be used to control ethanol emissions. However, scrubber efficiency is based, in part, on the pollutant concentration (200 to 300 parts per million by volume [ppmv] is needed for minimal efficiency), and the ethanol concentrations in fermentation rooms are

typically very low (about 100 ppmv). Incineration is also an inefficient control measure if pollutant concentrations are low. Recovery of ethanol vapor by carbon adsorption or other methods is another control alternative, although the cost of recovery may be high.

Grain handling and processing operations (unloading, conveying, milling, and storage) are typically controlled by fabric filters. Many smaller breweries purchase malt flour, and do not have milling operations.

Each brewery is unique, and source to source variations can significantly affect emissions. These variations result from differences in the brewing process, the type and age of equipment used, and total production. Brewery emissions are also affected by the unique recipes and time and temperature differences during various stages of production.

Emission factors for malt beverage production operations are shown in Tables 9.12.1-1 and 9.12.1-2.

Table 9.12.1-1. EMISSION FACTORS FOR MALT BEVERAGES[a]

	Filterable PM					
Source/control	PM	EMISSION FACTOR RATING	PM-10	EMISSION FACTOR RATING	PM-2.5	EMISSION FACTOR RATING
Brew kettle[b] (SCC 3-02-009-07)	0.41	E	ND		ND	
Brewers grain dryer (SCC 3-02-009-30,-32)	26[c]	D	0.33[d]	D	0.091[d]	D
Brewers grain dryer with wet scrubber (SCC 3-02-009-30,-32)	0.42[c]	D	0.11[d]	D	0.060[d]	D

[a] Emission factor units are lb of pollutant per 1,000 bbl of beer packaged unless noted. 1 bbl = 31 U.S. gallons. ND = no data available. SCC = Source Classification Code.
[b] Reference 9.
[c] References 11,13,17. Emission factor units are lb of pollutant per ton of dried grain produced.
[d] Reference 11. Emission factor units are lb of pollutant per ton of dried grain produced.

Table 9.12.1-2. EMISSION FACTORS FOR MALT BEVERAGES[a]

EMISSION FACTOR RATING: E

Process	CO	CO_2	VOC[b]	Hydrogen Sulfide
Activated carbon regeneration[c] (SCC 3-02-009-39)	ND	ND	0.035	ND
Aging tank--filling[d] (SCC 3-02-009-08)	ND	26	0.57	ND
Bottle crusher[e] (SCC 3-02-009-61)	ND	ND	0.48	ND
Bottle crusher with water sprays[e] (SCC 3-02-009-61)	ND	ND	0.13	ND
Bottle filling line[f] (SCC 3-02-009-53)	ND	ND	17	ND
Bottle soaker and cleaner[g] (SCC 3-02-009-60)	ND	ND	0.20	ND
Brew kettle[h] (SCC 3-02-009-07)	ND	ND	0.64	ND
Brewers grain dryer--natural gas-fired (SCC 3-02-009-30)	ND	840[j]	0.73[k]	ND
Brewers grain dryer--steam-heated (SCC 3-02-009-32)	0.22[m]	53[m]	0.73[k]	ND
Can crusher with pneumatic conveyor[n] (SCC 3-02-009-62)	ND	ND	0.088	ND
Can filling line[f] (SCC 3-02-009-51)	ND	ND	14	ND
Cereal cooker[p] (SCC 3-02-009-22)	ND	ND	0.0075	ND
Fermenter venting: closed fermenter[q] (SCC 3-02-009-35)	ND	2,100	2.0	0.015
Hot wort settling tank[r] (SCC 3-02-009-24)	ND	ND	0.075	ND
Keg filling line[s] (SCC 3-02-009-55)	ND	46	0.69	ND
Lauter tun[p] (SCC 3-02-009-23)	ND	ND	0.0055	ND
Mash tun[p] (SCC 3-02-009-21)	ND	ND	0.054	ND
Open wort cooler[r] (SCC 3-02-009-25)	ND	ND	0.022	ND
Sterilized bottle filling line (SCC 3-02-009-54)	ND	4,300[t]	40[u]	ND
Sterilized can filling line (SCC 3-02-009-52)	ND	1,900[t]	35[u]	ND

Table 9.12.1-2 (cont.).

Process	CO	CO_2	VOC[b]	Hydrogen Sulfide
Trub vessel--filling[r] (SCC 3-02-009-26)	ND	ND	0.25	ND
Waste beer storage tanks (SCC 3-02-009-65)	ND	ND	ND	ND

[a] Emission factor units are lb of pollutant per 1,000 bbl of beer packaged unless noted. 1 bbl = 31 U.S. gallons. ND = no data available. SCC = Source Classification Code.
[b] Total organic compounds measured using EPA Method 25A, unless noted otherwise. Pre-fermentation factors are presented as VOC as propane; post-fermentation factors are presented as VOC as ethanol because the emissions have been shown to be primarily ethanol.
[c] Reference 19. From CO_2 recovery and purification system on a closed fermenter.
[d] Reference 6. VOC as ethanol. EMISSION FACTOR RATING: D.
[e] Reference 15. VOC as ethanol. Emission factor units are lb of pollutant per batch of bottles crushed. Crusher averages about 34 crushes per day.
[f] Reference 20. Emission factor represents ethanol emissions measured using both EPA Method 18 and an FTIR analyzer. Factor is reported as VOC because ethanol is essentially the only VOC emitted from filling operations.
[g] Reference 14. Emission factor units are lb of pollutant per 1000 cases of bottles washed. Emission factor represents ethanol emissions measured by GC/FID. Factor is reported as VOC because ethanol is essentially the only VOC emitted from this operation. EMISSION FACTOR RATING: D.
[h] References 9,19. VOC as propane.
[j] Reference 17. Emission factor units are lb of pollutant per ton of dried grain produced. Emission factor includes data from dryers controlled by wet scrubbers, which do not control CO_2 emissions. EMISSION FACTOR RATING: D
[k] References 11-13. VOC as propane. Emission factor units are lb of pollutant per ton of dried grain produced. Emission factor includes data from dryers controlled by wet scrubbers, which do not control VOC emissions. EMISSION FACTOR RATING: D.
[m] Reference 11. Emission factor units are lb of pollutant per ton of dried grain produced. Emission factor includes data from dryers controlled by wet scrubbers, which do not control CO or CO_2 emissions. EMISSION FACTOR RATING: D.
[n] Reference 16. VOC as ethanol. Emission factor units are lb of pollutant per gallon of beer recovered. EMISSION FACTOR RATING: D.
[p] Reference 19. VOC as propane.
[q] Reference 10. VOC as ethanol. Emission factors are based on a 24-hour venting period prior to CO_2 collection.
[r] Reference 5. VOC as propane.
[s] Reference 5. VOC as ethanol. EMISSION FACTOR RATING: D.
[t] Reference 5. EMISSION FACTOR RATING: D.
[u] References 5,7-8,18. VOC as ethanol. Emission factor includes measurements of VOC as ethanol measured using EPA Method 25A and ethanol measured using both EPA Method 18 and an FTIR analyzer. EMISSION FACTOR RATING: D.

References For Section 9.12.1

1. Written communication from Brian Shrager, Midwest Research Institute, Cary, NC, to Dallas Safriet, U. S. Environmental Protection Agency, Research Triangle Park, NC, May 5, 1994.

2. Richard D. Rapoport *et al.*, *Characterization Of Fermentation Emissions From California Breweries*, Science Applications, Inc., Los Angeles, CA, October 26, 1983.

3. Written communication from Jere Zimmerman, Adolph Coors Company, Golden, CO, to David Reisdorph, Midwest Research Institute, Kansas City, MO, March 11, 1993.

4. Written communication from Arthur J. DeCelle, Beer Institute, Washington, D.C., to Dallas Safriet, U. S. Environmental Protection Agency, Research Triangle Park, NC, February 15, 1995.

5. *Report On Compliance Testing Performed For Coors Brewing Company*, Clean Air Engineering, Palatine, IL, November 25, 1992.

6. *Report On Diagnostic Testing Performed For Coors Brewing Company, Revision 1*, Clean Air Engineering, Palatine, IL, April 6, 1994.

7. *Can And Bottle Filler Vent Volatile Organic Compound Test For Coors Brewing Company*, Air Pollution Testing, Inc., Westminster, CO, October 1992.

8. *Filler Rooms Diagnostic VOC Test Report For Coors Brewing Company*, Air Pollution Testing, Inc., Westminster, CO, December 1992.

9. *Stack Emissions Survey, Adolph Coors Company Brewery Complex, Golden, Colorado*, Western Environmental Services and Testing, Inc., Casper, WY, November, 1990.

10. *Stack Emissions Survey, Adolph Coors Company Fermentation - Aging Facilities, Golden, Colorado*, Western Environmental Services and Testing, Inc., Casper, WY, November 1990.

11. *Stack Emissions Survey, Adolph Coors Company Brewery Complex, Golden, Colorado*, Western Environmental Services and Testing, Inc., Casper, WY, February 1991.

12. *Grain Dryer Diagnostic VOC Report For Coors Brewing Company*, Air Pollution Testing, Inc., Westminster, CO, November 1992.

13. *Report On Compliance Testing Performed For Coors Brewing Company*, Clean Air Engineering, Palatine, IL, November 25, 1992.

14. *Bottle Wash Soaker Area Ethanol Emissions Source Test Report Performed For Coors Brewing Company*, Acurex Environmental Corporation, Anaheim, CA, July 12, 1993.

15. *Volatile Organic Compound Emissions Source Test Report For Coors Brewing Company*, Air Pollution Testing, Inc., Lakewood, CO, August 1993.

16. *Crushed Can Conveyor Unit Compliance VOC Test Report For Coors Brewing Company*, Air Pollution Testing, Inc., Lakewood, CO, October 21, 1993.

17. *Emission Test Report, Dryers #1 And #4, Anheuser Busch, Inc., Columbus, Ohio*, Pollution Control Science, Miamisburg, OH, December 20, 1983.

18. *Source Emissions Testing Report For Coors Brewing Company: Golden, Colorado Facility, FID/FTIR Ethanol Measurements--Can And Bottle Line Ducts*, Air Pollution Testing, Inc., Lakewood, CO, April 3-4, 1995.

19. *Air Emissions Investigation Report, Miller Brewing Company, Fulton, New York*, RTP Environmental Associates, Inc., Westbury, NY, February 1994.

20. *Stationary Source Sampling Report Reference No. 21691, Anheuser-Busch Brewery, Fort Collins, Colorado, Filling Room Vents*, Entropy, Inc., Research Triangle Park, NC, July 26-28, 1994.

21. *Emission Factor Documentation For AP-42 Section 9.12.1, Malt Beverages*, Midwest Research Institute, Cary, NC, October 1996.

9.12.2 Wines And Brandy

9.12.2.1 General

Wine is an alcoholic beverage produced by the fermentation of sugars in fruit juices, primarily grape juice. In general, wines are classified into two types based on alcohol content: table wines (7 percent to 14 percent, by volume) and dessert wines (14 percent to 24 percent, by volume). Table wines are further subdivided into still and sparkling categories, depending upon the carbon dioxide (CO_2) content retained in the bottled wine. Still table wines are divided into three groups: red, rosé (blush), and white, based on the color of the wine.

9.12.2.2 Process Description[1-4]

The production of still table wines is discussed in the following paragraphs, followed by more concise discussions of the production of sweet table wines, sparkling wines, dessert wines, and brandy.

Still Table Wines -

The basic steps in vinification (wine production) include harvesting, crushing, pressing, fermentation, clarification, aging, finishing, and bottling. A simplified process diagram outlining the basic steps in the production of still table wines is shown in Figure 9.12.2-1.

Harvesting of grapes is usually conducted during the cooler periods of the day to prevent or retard heat buildup and flavor deterioration in the grape. Most wineries transport the whole grapes but some crush the grapes in the vineyard and transport the crushed fruit to the winery. Stemming and crushing are commonly conducted as soon as possible after harvest. These two steps are currently done separately using a crusher-stemmer, which contains an outer perforated cylinder to allow the grapes to pass through but prevents the passage of stems, leaves, and stalks. Crushing the grapes after stemming is accomplished by any one of many procedures. The three processes generally favored are: (1) pressing grapes against a perforated wall; (2) passing grapes through a set of rollers; or (3) using centrifugal force. Generally, 25 to 100 milligrams (mg) of liquified sulfur dioxide (SO_2) are added per liter of the crushed grape mass to control oxidation, wild yeast contamination, and spoilage bacteria.

Maceration is the breakdown of grape solids following crushing of the grapes. The major share of the breakdown results from the mechanical crushing but a small share results from enzymatic breakdown. In red and rosé wine production, the slurry of juice, skins, seeds, and pulp is termed the "must". In white wine production, the skins, seeds, and pulp are separated from the juice before inoculation with yeast and only the juice is fermented. A fermenting batch of juice is also called "must". Thus, the term "must" can refer to either the mixture of juice, seeds, skins, and pulp for red or rosé wines or only the juice for white wines. Maceration is always involved in the initial phase of red wine fermentation. The juice from the grapes may be extracted from the "must" in a press. Additionally, gravity flow juicers may be used initially to separate the majority of the juice from the crushed grapes and the press used to extract the juice remaining in the mass of pulp, skins, and seeds (pomace). There are many designs of dejuicers but, generally, they consist of a tank fitted with a perforated basket at the exit end. After gravity dejuicing has occurred, the pomace is placed in a press and the remaining juice extracted. There are three major types of presses. The horizonal press is used for either crushed or uncrushed grapes. A pneumatic press can be used for either crushed or

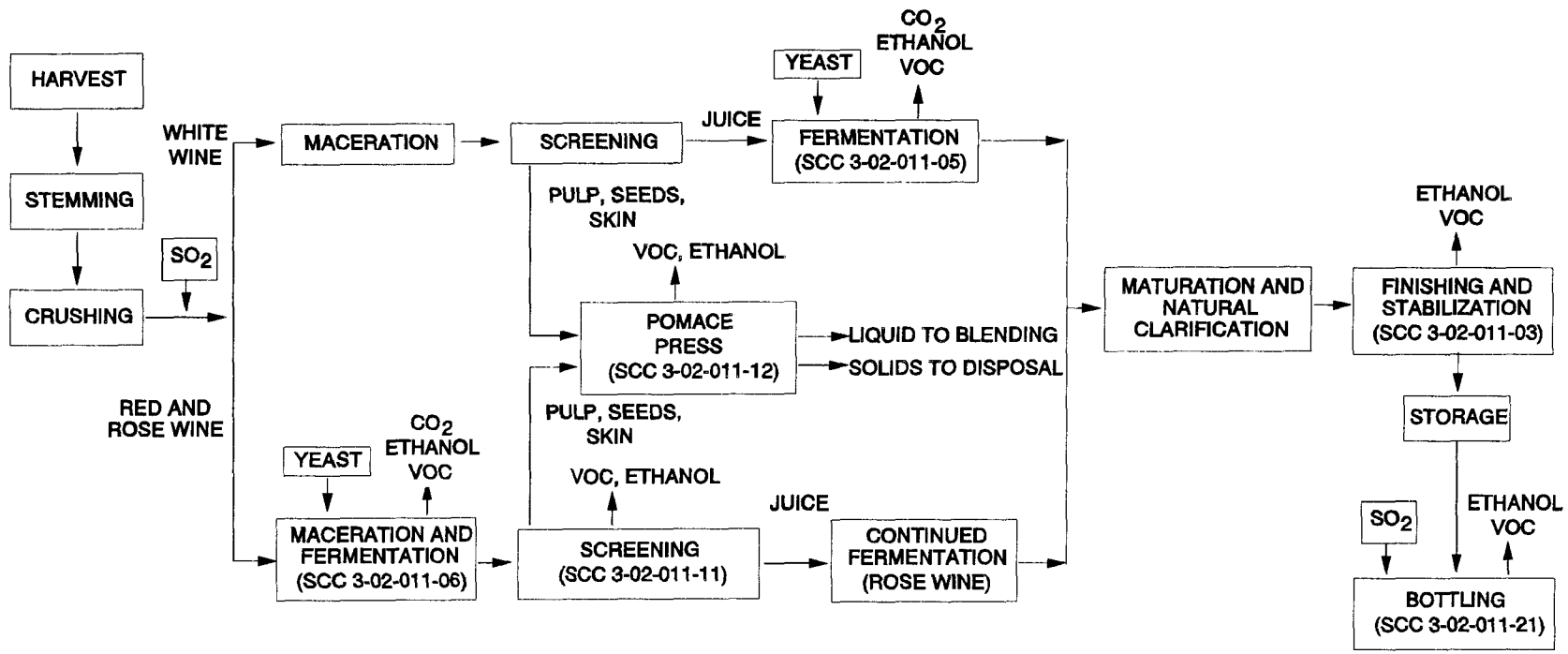

Figure 9.12.2.-1. Basic steps in still table wine production.
(Source Classification Codes in parentheses.)

uncrushed grapes as well as for fermented "must". In the continuous screw press, the "must" is pumped into the press and forced in the pressing chamber where perforated walls allow the juice to escape. After pressing, white "must" is typically clarified and/or filtered prior to fermentation to retain the fruity character. The white juice is commonly allowed to settle for up to 12 hours but may be centrifuged to speed the clarification.

Fermentation is the process whereby the sugars (glucose and fructose) present in the "must" undergo reaction by yeast activity to form ethyl alcohol (ethanol) and CO_2 according to the equation:

$$C_6H_{12}O_6 \rightarrow 2\ C_2H_5OH + 2\ CO_2$$

In the U. S., the sugar content of the juice is commonly measured with a hydrometer in units of degree Brix (°B), which is grams (g) of sugar per 100 grams of liquid. Fermentation may be initiated by the addition of yeast inoculation to the "must". The fermentation process takes place in tanks, barrels, and vats of a wide variety of shapes, sizes, and technical designs. Tanks are different from vats in that tanks are enclosed, whereas vats have open tops. In most of the larger wineries, tanks have almost completely replaced vats. Since the 1950s, the move has been away from the use of wooden tanks, primarily to stainless steel tanks. Lined concrete tanks are also used, and fiberglass tanks are becoming more popular because of their light weight and lower cost.

The fermentation process is an exothermic reaction and requires temperature control of the fermenting "must". Red wines are typically fermented at 25° to 28°C (70° to 82°F) and white wines at 8° to 15°C (46° to 59°F). Almost all of the fermentation is conducted by the batch process and continuous fermentors are rarely used in the U. S. Size of the fermentors is based primarily on the volume of "must" to be fermented. During fermentation of red wines, the CO_2 released by the yeast metabolism becomes entrapped in the pomace (layer of skins and seeds) and causes it to rise to the top of the tank where it forms a cap. The pomace cap is periodically covered with the "must" to increase color removal, aerate the fermenting "must", limit growth of spoilage organisms in the cap, and help equalize the temperature in the fermenting "must". For white wines, the main technical requirement is efficient temperature control. Temperature is one of the most influential factors affecting the fermentation process. During fermentation of both white and red "must", the CO_2, water vapor, and ethanol are released through a vent in the top of the tank. Malolactic fermentation sometimes follows the primary fermentation and results in a reduction in acidity and increased pH. There are very diverse opinions about this step because the fermentation, to varying degrees, can improve or reduce wine quality.

After fermentation, all wines undergo a period of adjustment (maturation) and clarification prior to bottling. The process of maturation involves the precipitation of particulate and colloidal material from the wine as well as a complex range of physical, chemical, and biological changes that tend to maintain and/or improve the sensory characteristics of the wine. The major adjustments are acidity modification, sweetening, dealcoholization, color adjustment, and blending. Following the fermentation process, a preliminary clarification step is commonly accomplished by decanting the wine from one vessel to another, called racking, in order to separate the sediment (lees) from the wine. Current racking practices range from manually decanting wine from barrel to barrel to highly sophisticated, automated, tank-to-tank transfers. In all cases, separation occurs with minimal agitation to avoid resuspending the particulate matter. The residue from racking may be filtered to recover wine otherwise lost with the lees or may be used "as is" for brandy production.

Stabilization and further clarification steps follow maturation and initial clarification to produce a permanently clear wine with no flavor faults. The steps entail various stabilization

procedures, additional clarification (fining), and a final filtration prior to bottling. The most common stabilization technique used for many red wines and some white wines is aging the wine for a period of months or years. Vessels used to store and age wine, termed cooperage, are produced in a wide range of sizes, depending on their intended use. White oak has traditionally been used for the barrels to age wine, but currently its usage is reserved primarily for the production of premium white and red wines and some fortified wines. Water and ethanol are lost through the barrel surfaces and a partial vacuum develops in the space created by this loss. Each barrel is periodically opened and topped off with wine to fill the void created by the ethanol and water loss. Cooperage constructed from materials other than wood has many advantages and is less expensive to maintain. Stainless steel is often preferred, but fiberglass and concrete are also used. In addition to aging, other stabilization procedures are used to prevent formation of potassium bitartrate or calcium tartrate crystals, haziness (casse) resulting from protein coalescence, casse resulting from oxidation of tannins present in the wine, and haziness due to metal ions such as iron and copper. Enzyme mixtures are used to remove polysaccharides which can cause filtration problems and haze formation. Most wines contain viable but dormant microorganisms. Racking is used as an initial step in microbial stabilization but long-term stability frequently requires use of sulfur dioxide as the antimicrobial agent. Other methods include pasteurization and filter sterilization. Sulfur dioxide may be added at various stages in wine production to prevent microbial growth and oxidation. Finishing (fining) agents are commonly added to accelerate the precipitation of suspended material in wine. Prior to bottling, a final clarification step is used to remove any remaining suspended material and microbes in the wine. This step involves only physical methods of clarification, generally a filtration procedure.

Glass bottles are the container of choice for premium quality wines and for sparkling wines. Because of disadvantages such as weight and breakage, glass bottles are sometimes being replaced by new containers, such as bag-in-box, for many standard quality, high volume wines. To protect the wine against microbial spoilage, and to limit oxidation, the SO_2 content in the wine is adjusted to a final level of 50 mg/L before filling. Precaution is taken to minimize contact with air during filling and thereby to reduce oxidation. This is done by either flushing the bottle with inert gas before filling or flushing the headspace with inert gas after filling.

Sweet Table Wines -

The most famous of the sweet wines are those made from noble-rotted, *Botrytis*-infected grapes. These wines are produced to a limited extent in the United States. The *Botrytis* mold acts to loosen the grape's skin so moisture loss occurs rapidly and the sugar concentration increases in the grape. The grapes are then selectively picked, followed by pressing, and fermentation. Fermentation is a slow process, however, because of the high sugar content and the use of SO_2 to retard the growth of undesirable molds and microorganisms. Nonbotrytized sweet wines are also produced by drying the grapes. Drying involves allowing the grapes to dehydrate on mats or trays in the shade for weeks or months and then crushing the grapes and fermenting the concentrated juice. Heating, boiling, or freezing is also used to concentrate juice for semisweet wines.

Sparkling Wines -

Most sparkling wines obtain CO_2 supersaturation using a second alcoholic fermentation, typically induced by adding yeast and sugar to dry white wine. There are three principal methods of sparkling wine production: the *methode champagnoise*, the transfer method, and the bulk method. In the *methode champagnoise*, both red and white grapes may be used, but most sparkling wines are white. The grapes are harvested earlier than those used for still table wines and pressed whole without prior stemming or crushing to extract the juice with a minimum of pigment and tannin extraction. This is important for producing white sparkling wines from red-skinned grapes. Primary fermentation is carried out at approximately 15°C (59°F) and bentonite and/or casein may be added

to aid the process and improve clarity. The blending of wines produced from different sites, varieties, and vintages distinguishes the traditional method. Before preparing the blend (*cuvée*), the individual base wines are clarified and stabilized. Aging typically takes place in stainless steel tanks but occasionally takes place in oak cooperage. The secondary fermentation requires inoculation of the *cuvée* wine with a special yeast strain. A concentrated sucrose solution is added to the *cuvée* just prior to the yeast inoculation. The wine is then bottled, capped, and stacked horizontally at a stable temperature, preferably between 10° to 15°C (50° to 59°F), for the second fermentation. After fermentation, the bottles are transferred to a new site for maturation and stored at about 10°C (50°F).

Riddling is the technique used to remove the yeast sediment (lees). The process involves loosening and suspending the cells by manual or mechanical shaking and turning, and positioning the bottle to move the lees toward the neck. Disgorging takes place about 1 or 2 years after bottling. The bottles are cooled and the necks immersed in an ice/$CaCl_2$ or ice/glycol solution to freeze the sediment. The disgorging machine rapidly removes the cap on the bottle, allowing for ejection of the frozen yeast plug. The mouth of the bottle is quickly covered and the fluid level is adjusted. Small quantities of SO_2 or ascorbic acid may be added to prevent subsequent in-bottle fermentation and limit oxidation. Once the volume adjustment and other additions are complete, the bottles are sealed with special corks, the wire hoods added, and the bottles agitated to disperse the additions. The bottles are then decorated with their capsule and labels and stored for about 3 months to allow the corks to set in the necks. The transfer method is identical to the *methode champagnoise* up to the riddling stage. During aging, the bottles are stored neck down. When the aging process is complete, the bottles are chilled below 0°C (32°F) before discharge into a transfer machine and passage to pressurized receiving tanks. The wine is usually sweetened, sulfited, clarified by filtration, and sterile filtered just before bottling.

In the bulk method, fermentation of the juice for the base wine may proceed until all the sugar is consumed or it may be prematurely terminated to retain sugars for the second fermentation. The yeast is removed by centrifugation and/or filtration. Once the *cuvée* is formulated, the wines are combined with yeast additives and, if necessary, sugar. The second fermentation takes place in stainless steel tanks similar to those used in the transfer process. Removal of the lees takes place at the end of the second fermentation by centrifugation and/or filtration. The sugar and SO_2 contents are adjusted just before sterile filtration and bottling.

Other methods of production of sparkling wine include the "rural" method and carbonation. The rural method involves prematurely terminating the primary fermentation prior to a second in-bottle fermentation. The injection of CO_2 (carbonation) under pressure at low temperatures is the least expensive and the least prestigious method of producing sparkling wines.

Dessert Wines -

Dessert wines are classified together because of their elevated alcohol content. The most common dessert wines are sherries and ports.

Baking is the most popular technique for producing sherries in the United States. Grapes are crushed and stemmed and SO_2 added as soon as possible to control bacteria and oxidation. The maximum amount of juice is separated from the skins and the juice is transferred to fermentors. The juice is inoculated with starter and fermented at temperatures of 25° to 30°C (77° to 86°F). The new wine is then pumped from the fermentor or settling tank to the fortification tank. High proof spirits are added to the sherry material, or shermat, to raise the alcohol content to 17 to 18 percent by volume and then the wine is thoroughly mixed, clarified, and filtered before baking. Slow baking occurs when the wine is stored in barrels exposed to the sun. More rapid baking is achieved through

the use of artificially heated storage rooms or heating coils in barrels or tanks. After baking, the sherry is cooled, clarified, and filtered. Maturation is then required and is usually carried out in oak barrels. Aging can last from 6 months to 3 years or more.

Port wines are produced by the premature termination of fermentation by addition of brandy. When the fermenting must is separated from the pomace by gravity, it is fortified with wine spirits containing about 77 percent alcohol, by volume. Most white ports are fortified when half the original sugar content has been fermented, except for semidry and dry white ports which are fortified later. The type and duration of aging depend on the desired style of wine. Blending is used to achieve the desired properties of the wine. The final blend is left to mature in oak cooperage for several months prior to fining, filtration, stabilization, and bottling.

Brandy Production —

Brandy is an alcoholic distillate or mixture of distillates obtained from the fermented juice, mash, or wine from grapes or other fruit (e. g., apples, apricots, peaches, blackberries, or boysenberries). Brandy is produced at less than 190° proof and bottled at a minimum of 80° proof. (In the United States, "proof" denotes the ethyl alcohol content of a liquid at 15.6°C (60°F), stated as twice the percent ethyl alcohol by volume.) Two types of spirits are produced from wine or wine residue: beverage brandy and "wine spirits".

In brandy production, the grapes are pressed immediately after crushing. There are major differences in the fermentation process between wine and brandy production. Pure yeast cultures are not used in the fermentation process for brandy. Brandy can be made solely from the fermentation of fruit or can be distilled either from the lees leftover from the racking process in still wine production or from the pomace cap that is leftover from still red wine fermentations.

In the United States, distillation is commenced immediately after the fermentation step, generally using continuous column distillation, usually with an aldehyde section, instead of pot stills. For a detailed discussion of the distillation and aging of distilled spirits, which include brandy and brandy spirits, refer to AP-42 Section 9.12.3, "Distilled And Blended Liquors". After distillation, the brandy is aged in oak casks for 3 to 15 years or more. During aging, some of the ethanol and water seep through the oak and evaporate, so brandy is added periodically to compensate for this loss. Caramel coloring is added to give the brandy a characteristic dark brown color. After aging, the brandy may be blended and/or flavored, and then chilled, filtered, and bottled.

9.12.2.3 Emissions And Controls[5-11]

Ethanol and carbon dioxide are the primary compounds emitted during the fermentation step in the production of wines and brandy. Acetaldehyde, methyl alcohol (methanol), n-propyl alcohol, n-butyl alcohol, sec-butyl alcohol, isobutyl alcohol, isoamyl alcohol, and hydrogen sulfide also are emitted but in much smaller quantities compared to ethanol emissions. In addition, a large number of other compounds are formed during the fermentation and aging process. Selected examples of other types of compounds formed and potentially emitted during the fermentation process include a variety of acetates, monoterpenes, higher alcohols, higher acids, aldehydes and ketones, and organosulfides. During the fermentation step, large quantities of CO_2 are also formed and emitted.

Fugitive ethanol emissions also occur during the screening of the red wine, pressing of the pomace cap, aging in oak cooperage, and the bottling process. In addition, as a preservative, small amounts of liquified SO_2 are often added to the grapes after harvest, to the "must" prior to

fermentation, or to the wine after the fermentation is completed; SO_2 emissions can occur during these steps. There is little potential for VOC emissions before the fermentation step in wine production.

Except for harvesting the grapes and possibly unloading the grapes at the winery, there is essentially no potential for particulate (PM) emissions from this industry.

Emission controls are not currently used during the production of wines or brandy. Five potential control systems have been considered and three have been the subject of pilot-scale emission test studies at wineries or universities in California. The five systems are (1) carbon adsorption, (2) water scrubbers, (3) catalytic incineration, (4) condensation, and (5) temperature control. All of the systems have disadvantages in either low control efficiency, cost effectiveness, or overall applicability to the wide variety of wineries.

Emission factors for VOC and hydrogen sulfide emissions from the fermentation step in wine production are shown in Table 9.12.2-1. The emission factors for controlled ethanol emissions and the uncontrolled emissions of hydrogen sulfide and other VOCs from the fermentation step should be used with caution because the factors are based on a small number of tests and fermentation conditions vary considerably from one winery to another

The only emission factors for wine production processes other than fermentation, were obtained from a 1982 test.[7] These factors represent uncontrolled fugitive ethanol emissions during handling processes. The factor for fugitive emissions from the pomace screening for red wine (SCC 3-02-011-11) is 0.5 lb/1,000 gal of juice. An ethanol emission factor for the pomace press is applicable only to red wine because the juice for white wine goes through the pomace press before the fermentation step. The emission factor for red wine (SCC 3-02-011-12) is 0.02 lb/ton of pomace. Although fugitive emissions occur during the bottling of both red and white wines, an emission factor is available only for the bottling of white wine. The factor for white wine bottling (SCC 3-02-011-21) is 0.1 lb/1,000 gal of wine. All of these factors are rated E. These emission factors should be used with extreme caution because they are based on a limited number of tests conducted at one winery. There is no emission factor for fugitive emissions from the finishing and stabilization step (aging).

There are no available data that can be used to estimate emission factors for the production of sweet table wines, dessert wines, sparkling wines, or brandy.

Table 9.12.2-1. EMISSION FACTORS FOR WINE FERMENTATION[a]

EMISSION FACTOR RATING: E

Wine type	Type of control	Ethyl alcohol, lb/10^3 gal	Methyl alcohol, lb/10^3 gal	n-Propyl alcohol, lb/10^3 gal	n-Butyl alcohol, lb/10^3 gal	Sec-Butyl alcohol, lb/10^3 gal	Isobutyl alcohol, lb/10^3 gal	Isoamyl alcohol, lb/10^3 gal	Acet-aldehyde, lb/10^3 gal	Hydrogen sulfide, lb/10^3 gal
Red (SCC 3-02-011-06)	None[b]	4.6[c]	0.0025	0.0034	5.5E-5	4.5E-5	0.0036	0.014	0.0027	0.0017
	Carbon adsorption[d]	0.17[c]	ND	ND	ND	ND	ND	ND	ND	ND
	Catalytic incineration[e]	1.1	ND	ND	ND	ND	ND	ND	ND	ND
	Wet scrubber[e]	0.056	ND	ND	ND	ND	ND	ND	ND	ND
White (SCC 3-02-011-05)	None[b]	1.8[c]	6.4E-4	0.0023	ND	ND	6.9E-4	0.0051	7.2E-5	0.0014
	Carbon adsorption[d]	0.092[c]	ND	ND	ND	ND	ND	ND	ND	ND
	Catalytic incineration[e]	0.15	ND	ND	ND	ND	ND	ND	ND	ND
	Wet scrubber[e]	0.083	ND	ND	ND	ND	ND	ND	ND	ND

[a] Emission factor units are lb/1,000 gal of fermented juice produced. SCC = Source Classification Code. ND = no data.
[b] References 8-11.
[c] EMISSION FACTOR RATING: C
[d] References 8-10.
[e] Reference 8.

References For Section 9.12.2

1. R. S. Jackson, *Wine Science: Principles And Application,* Academic Press, San Diego, CA, 1994.

2. M. A. Amerine, "Wine", in *Kirk-Othmer Encyclopedia Of Chemical Technology,* Third Edition, Volume 24, John Wiley and Sons, New York, 1984.

3. J. A. Heredia, "Technical Assessment Document On Ethanol Emissions And Control From California Wineries", Master of Science Dissertation, California Polytechnic State University, San Luis Obispo, CA, June 1993.

4. M. A. Amerine, *et al., Technology Of Wine Making*, Fourth Edition, AVI Publishing Company, Westport, CT, 1980.

5. G. C. Miller, et al., "Loss Of Aroma Compounds In Carbon Dioxide Effluent During White Wine Fermentation", Food Technol. Aust., *39*(5):246-249, 1987.

6. Written communication from Dean C. Simeroth, California Air Resources Board, Sacramento, CA, to Mark Boese, San Joaquin Valley Unified Air Pollution Control District, Fresno, CA, November 1, 1994.

7. EAL Corporation, "Characterization Of Ethanol Emissions From Wineries", Final Report, California Air Resources Board, Sacramento, CA, July, 1982.

8. *Ethanol Emissions And Control For Wine Fermentation And Tanks,* Report # ARB/ML-88-027, California Air Resources Board, April 1988.

9. D.F. Todd, et al., "Ethanol Emissions Control From Wine Fermentation Tanks Using Charcoal Adsorption: A Pilot Study", California Air Resources Board, published by California Agricultural Technology Institute, March 1990.

10. *Ethanol Emissions Control From Wine Fermentation Tanks Utilizing Carbon Adsorption Technology*, Akton Associates, Martinez, CA, June 1991.

11. Written communication from Arthur Caputi, Jr., E&J Gallo Winery, Modesto, CA, to Maria Lima, San Joaquin Valley Unified Air Pollution Control District, Fresno, CA, December 14, 1992.

9.12.3 Distilled And Blended Liquors

[Work In Progress]

9.13 Miscellaneous Food And Kindred Products

9.13.1 Fish Processing

9.13.2 Coffee Roasting

9.13.3 Snack Chip Deep Fat Frying

9.13.4 Yeast Production

9.13.1 Fish Processing

9.13.1.1 General

Fish canning and byproduct manufacturing are conducted in 136 plants in 12 states. The majority of these plants are in Washington, Alaska, Maine, Louisiana, and California. Some processing occurs in Delaware, Florida, Illinois, Maryland, New York, and Virginia. The industry experienced an 18 percent increase in the quantity of fish processed in 1990, and additional increases were expected in 1992 as well. Exports of canned fish and fish meal also are increasing because of diminishing supply in other countries.

9.13.1.2 Process Description

Fish processing includes both the canning of fish for human consumption and the production of fish byproducts such as meal and oil. Either a precooking method or a raw pack method can be used in canning. In the precooking method, the raw fish are cleaned and cooked before the canning step. In the raw pack method, the raw fish are cleaned and placed in cans before cooking. The precooking method is used typically for larger fish such as tuna, while the raw pack method is used for smaller fish such as sardines.

The byproduct manufacture segment of the fish industry uses canning or filleting wastes and fish that are not suitable for human consumption to produce fish meal and fish oil.

Canning -

The precooking method of canning (Figure 9.13.1-1) begins with thawing the fish, if necessary. The fish are eviscerated and washed, then cooked. Cooking is accomplished using steam, oil, hot air, or smoke for 1.5 to 10 hours, depending on fish size. Precooking removes the fish oils and coagulates the protein in the fish to loosen the meat. The fish are then cooled, which may take several hours. Refrigeration may be used to reduce the cooling time. After cooling, the head, fins, bones, and undesirable meat are removed, and the remainder is cut or chopped to be put in cans. Oil, brine, and/or water are added to the cans, which are sealed and pressure cooked before shipment.

The raw pack method of canning (Figure 9.13.1-2) also begins with thawing and weighing the fish. They are then washed and possibly brined, or "nobbed", which is removing the heads, viscera, and tails. The fish are placed in cans and then cooked, drained, and dried. After drying, liquid, which may be oil, brine, water, sauce, or other liquids, is added to the cans. Finally, the cans are sealed, washed, and sterilized with steam or hot water.

Byproduct Manufacture -

The only process used in the U. S. to extract oil from the fish is the wet steam process. Fish byproduct manufacturing (Figure 9.13.1-3) begins with cooking the fish at 100°C (lower for some species) in a continuous cooker. This process coagulates the protein and ruptures the cell walls to release the water and oil. The mixture may be strained with an auger in a perforated casing before pressing with a screw press. As the fish are moved along the screw press, the pressure is increased and the volume is decreased. The liquid from the mixture, known as pressing liquor, is squeezed out through a perforated casing.

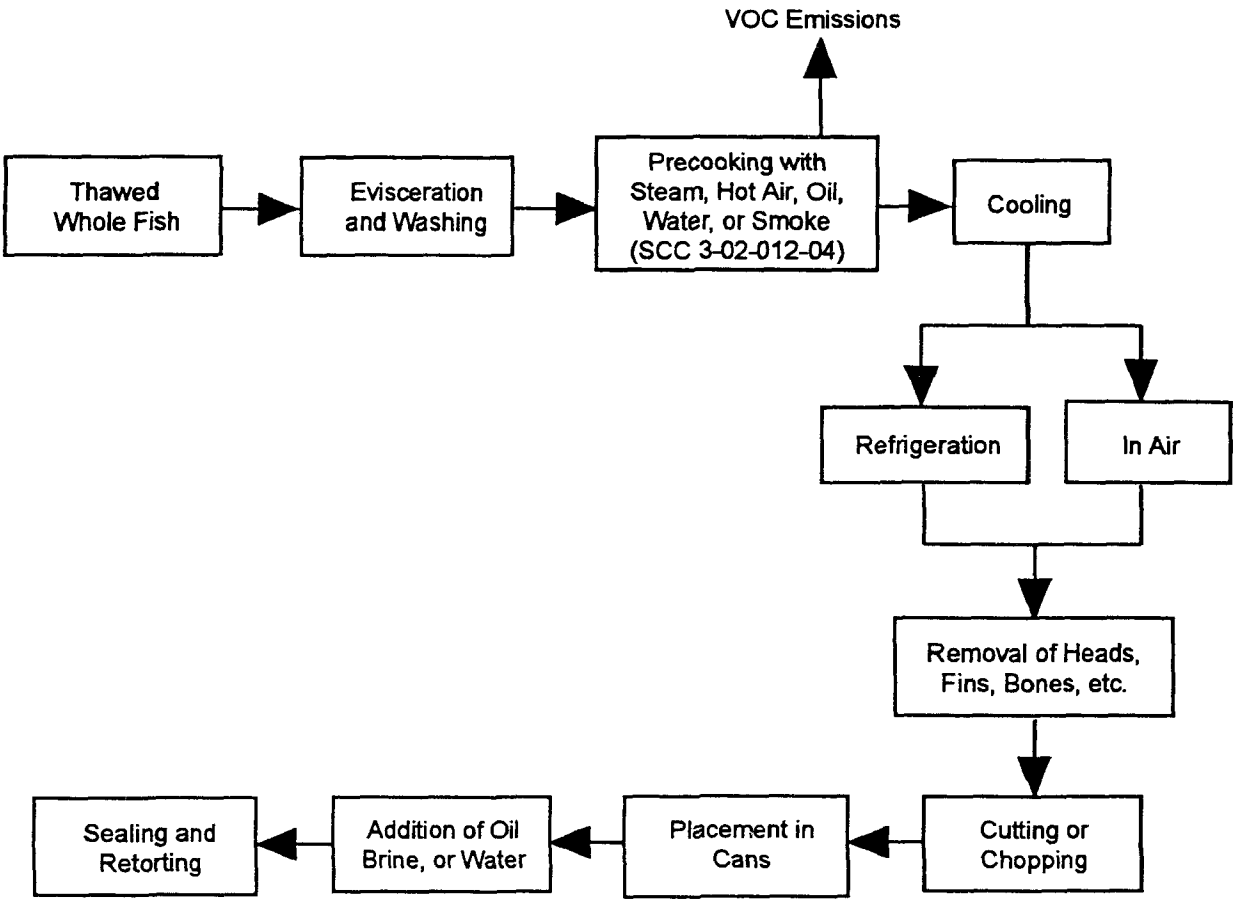

Figure 9.13.1-1. Flow diagram of precooking method.
(Source Classification Codes in parentheses.)

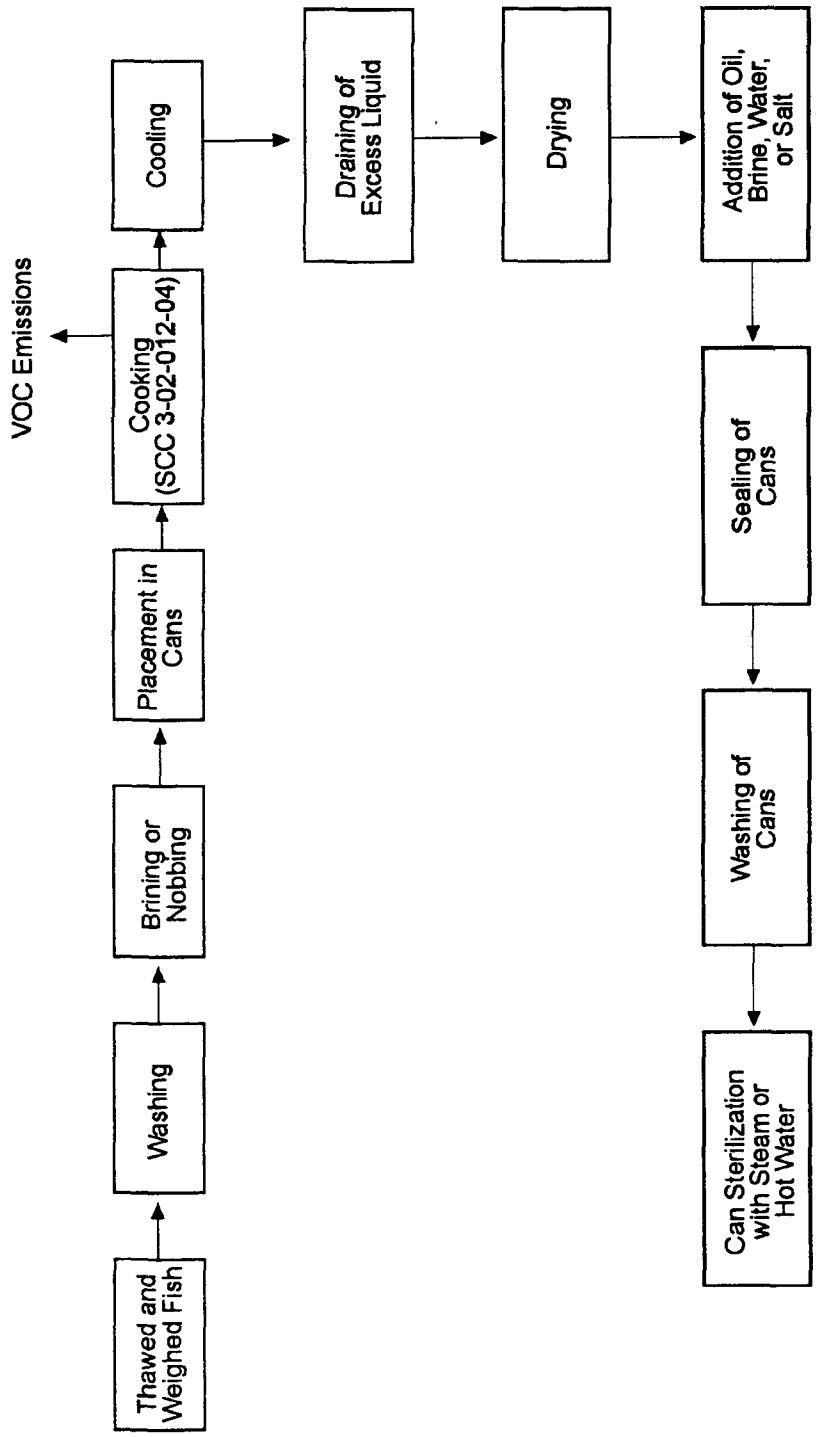

Figure 9.13.1-2. Flow diagram of raw packing method. (Source Classification Codes in parentheses.)

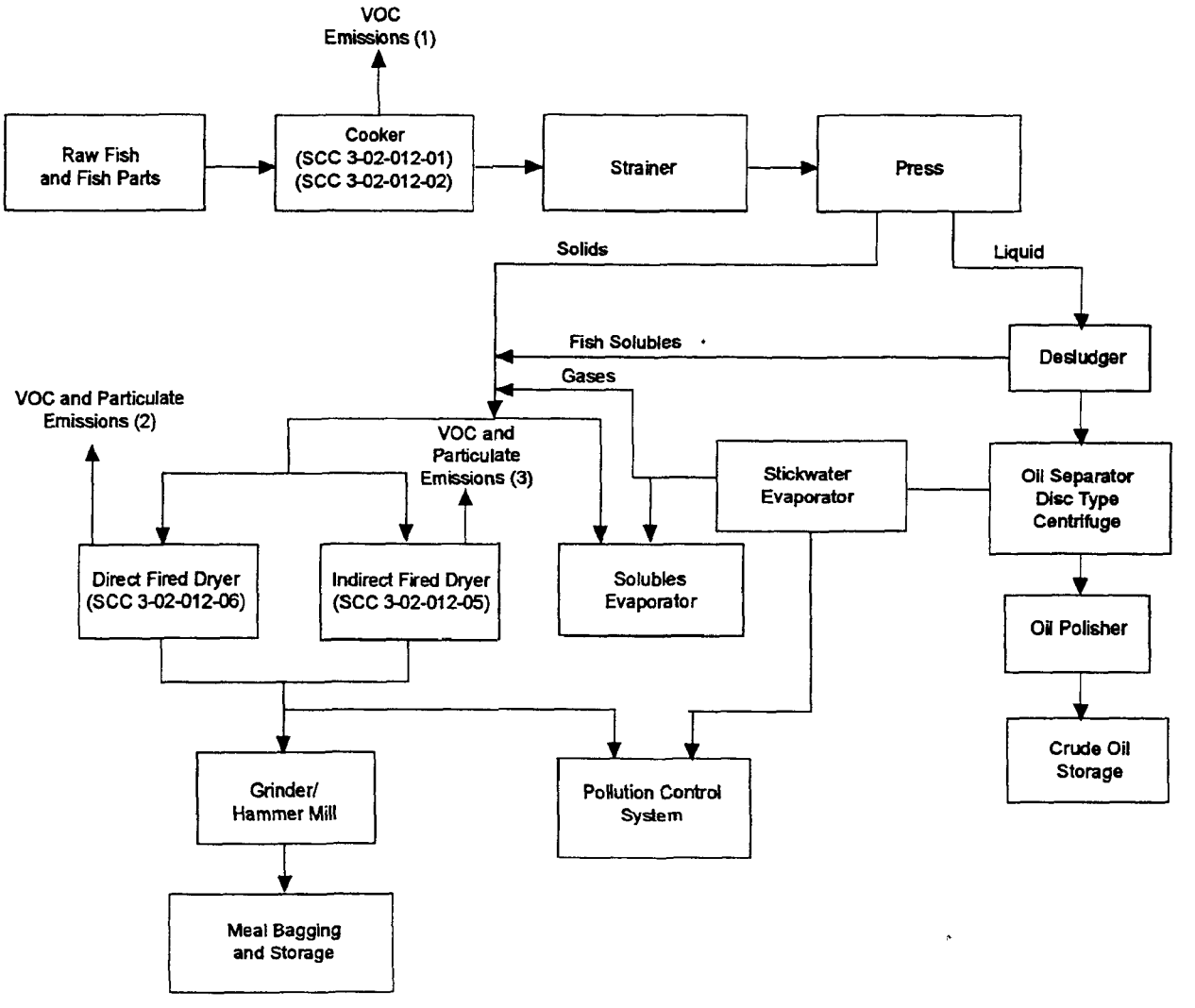

(1) VOC emissions consist of H_2S and $(CH_3)_3N$, but no particulates

(2) Large odor source, as well as smoke

(3) Slightly less odor than direct fired dryers, and no smoke

Figure 9.13.1-3. Flow diagram of fish meal and crude fish oil processing. (Source Classification Codes in parentheses.)

The pressing liquor, which consists of water, oil, and some solids, is transported to a centrifuge or desludger where the solids are removed. These solids are later returned to the press cake in the drying step. The oil and water are separated using a disc-type centrifuge in the oil separator. The oil is "polished" by using hot water washes and centrifugation and is then sent to an oil-refining operation. The water removed from the oil (stickwater) goes to an evaporator to concentrate the solids.

The press cake, stickwater, and solids are mixed and sent to either a direct-fired or an indirect-fired dryer (steam tube dryer). A direct-fired dryer consists of a slowly rotating cylinder through which air, heated to about 600°C by an open flame, passes through the meal to evaporate the liquid. An indirect-fired dryer consists of a fixed cylinder with rotating scrapers that heat the meal with steam or hot fluids flowing through discs, tubes, coils, or the dryer casing itself. Air also passes through this apparatus, but it is not heated and flows in the opposite direction to the meal to entrain the evaporated water. Indirect-fired dryers require twice as much time to dry the meal as direct-fired dryers.

The dried meal is cooled, ground to a size that passes through a U. S. No. 7 standard screen, and transferred by pneumatic conveyor to storage. The ground meal is stored in bulk or in paper, burlap, or woven plastic bags. This meal is used in animal and pet feed because of its high protein content.

The "polished oil" is further purified by a process called "hardening" (Figure 9.13.1-4). First, the polished oil is refined by mixing the oil with an alkaline solution in a large stirred vat. The alkaline solution reacts with the free fatty acids in the oil to form insoluble soaps. The mixture is allowed to settle overnight, and the cleared oil is extracted off the top. The oil is then washed with hot water to remove any remaining soaps.

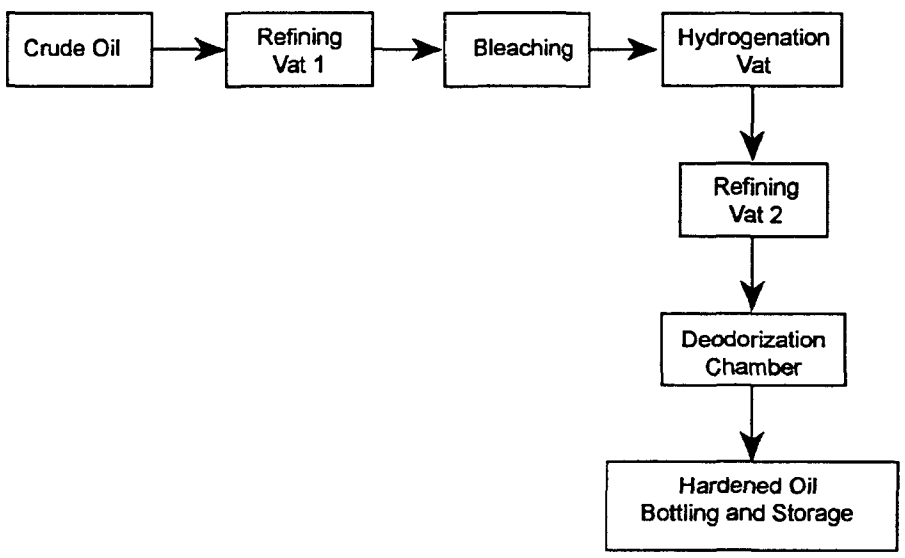

Figure 9.13.1-4. Oil hardening process.

Bleaching occurs in the next step by mixing the oil with natural clays to remove oil pigments and colored matter. This process proceeds at temperatures between 80 and 116°C, in either a batch or continuous mode. After bleaching, hydrogenation of the unsaturated fatty acid chains is the next

step. A nickel catalyst, at a concentration of 0.05 to 0.1 percent by weight, is added to a vat of oil, the mixture is heated and stirred, and hydrogen is injected into the mixture to react with the unsaturated fatty acid chains. After the hydrogenation is completed, the oil is cooled and filtered to remove the nickel.

The hydrogenated oil is refined again before the deodorization step, which removes odor and flavor-producing chemicals. Deodorization occurs in a vacuum chamber where dry, oxygen-free steam is bubbled through the oil to remove the undesirable chemicals. Volatilization of the undesirable chemicals occurs at temperatures between 170 to 230°C. The oil is then cooled to about 38°C before exposure to air to prevent formation of undesirable chemicals.

9.13.1.2 Emissions And Controls

Although smoke and particulate may be a problem, odors are the most objectionable emissions from fish processing plants. The fish byproducts segment results in more of these odorous contaminants than canning, because the fish are often in a further state of decomposition, which usually results in greater concentrations of odors.

The largest odor source in the fish byproducts segment is the fish meal driers. Usually, direct-fired driers emit more odors than steam-tube driers. Direct-fired driers also emit smoke and particulate.

Odorous gases from reduction cookers consist primarily of hydrogen sulfide (H_2S) and trimethylamine [$(CH_3)_3N$] but are emitted from this stage in appreciably smaller volumes than from fish meal driers. There are virtually no particulate emissions from reduction cookers.

Some odors are produced by the canning processes. Generally, the precooked method emits fewer odorous gases than the raw pack method. In the precooked process, the odorous exhaust gases are trapped in the cookers, whereas in the raw pack process, the steam and odorous gases typically are vented directly to the atmosphere.

Fish cannery and fish byproduct processing odors can be controlled with afterburners, chlorinator-scrubbers, or condensers. Afterburners are most effective, providing virtually 100 percent odor control, but they are costly from a fuel-use standpoint. Chlorinator scrubbers have been found to be 95 to 99 percent effective in controlling odors from cookers and driers. Condensers are the least effective control device.

Particulate emissions from the fish meal process are usually limited to the dryers, primarily the direct-fired dryers, and to the grinding and conveying of the dried fish meal. Because there is a relatively small quantity of fines in the ground fish meal, particulate emissions from the grinding, pneumatic conveyors and bagging operations are expected to be very low. Generally, cyclones have been found to be an effective means to collect particulate from the dryers, grinders and conveyors, and from the bagging of the ground fish meal.

Emission factors for fish processing are presented in Table 9.13.1-1. Factors are expressed in units of kilograms per megagram (kg/Mg) and pounds per ton (lb/ton).

Table 9.13.1-1 (Metric And English Units). UNCONTROLLED EMISSION FACTORS FOR FISH CANNING AND BYPRODUCT MANUFACTURE[a]

EMISSION FACTOR RATING: C

Process	Particulate		Trimethylamine $[(CH_3)_3N]$		Hydrogen Sulfide (H_2S)	
	kg/Mg	lb/ton	kg/Mg	lb/ton	kg/Mg	lb/ton
Cookers, canning (SCC 3-02-012-04)	Neg	Neg	—[c]	—[c]	—[c]	—[c]
Cookers, scrap						
Fresh fish (SCC 3-02-012-01)	Neg	Neg	0.15[c]	0.3[c]	0.005[c]	0.01[c]
Stale fish (SCC 3-02-012-02)	Neg	Neg	1.75[c]	3.5[c]	0.10[c]	0.2[c]
Steam tube dryer (SCC 3-02-012-05)	2.5	5	—[b]	—[b]	—[b]	—[b]
Direct-fired dryer (SCC 3-02-012-06)	4	8	—[b]	—[b]	—[b]	—[b]

[a] Reference 1. Factors are in terms of raw fish processed. SCC = Source Classification Code. Neg = negligible.
[b] Emissions suspected, but data are not available for quantification.
[c] Reference 2.

References For Section 9.13.1

1. W. H. Prokop, "Fish Processing", *Air Pollution Engineering Manual*, Van Nostrand Reinhold, New York, 1992.

2. W. Summer, *Methods Of Air Deodorization*, Elsevier Publishing, New York City, 1963.

3. M. T. Gillies, *Seafood Processing*, Noyes Data Corporation, Park Ridge, NJ, 1971.

4. F. W. Wheaton and T. B. Lawson, *Processing Aquatic Food Products*, John Wiley and Sons, New York, 1985.

5. M. Windsor and S. Barlow, *Introduction To Fishery Byproducts*, Fishing News Books, Ltd., Surrey, England, 1981.

6. D. Warne, *Manual On Fish Canning*, Food And Agricultural Organization Of The United Nations, Rome, Italy, 1988.

9.13.2 Coffee Roasting

9.13.2.1 General

The coffee roasting industry involves the processing of green coffee beans into roasted coffee products, including whole and ground beans and soluble coffee products. The Standard Industrial Classification (SIC) code for coffee roasting is 2095.

9.13.2.2 Process Description[1-6]

The coffee roasting process consists essentially of cleaning, roasting, cooling, grinding, and packaging operations. Figure 9.13.2-1 shows a process flow diagram for a typical coffee roasting operation. Bags of green coffee beans are hand- or machine-opened, dumped into a hopper, and screened to remove debris. The green beans are then weighed and transferred by belt or pneumatic conveyor to storage hoppers. From the storage hoppers, the green beans are conveyed to the roaster. Roasters typically operate at temperatures between 370° and 540°C (698° and 1004°F), and the beans are roasted for a period of time ranging from a few minutes to about 30 minutes. Roasters are typically horizontal rotating drums that tumble the green coffee beans in a current of hot combustion gases; the roasters operate in either batch or continuous modes and can be indirect- or direct-fired. Indirect-fired roasters are roasters in which the burner flame does not contact the coffee beans, although the combustion gases from the burner do contact the beans. Direct-fired roasters contact the beans with the burner flame and the combustion gases. At the end of the roasting cycle, water sprays are used to "quench" the beans. Following roasting, the beans are cooled and run through a "destoner". Destoners are air classifiers that remove stones, metal fragments, and other waste not removed during initial screening from the beans. The destoners pneumatically convey the beans to a hopper, where the beans are stabilize and dry (small amounts of water from quenching exist on the surface of the beans). This stabilization process is called equilibration. Following equilibration, the roasted beans are ground, usually by multi-stage grinders. Some roasted beans are packaged and shipped as whole beans. Finally, the ground coffee is vacuum sealed and shipped.

Additional operations associated with processing green coffee beans include decaffeination and instant (soluble) coffee production. Decaffeination is the process of extracting caffeine from green coffee beans prior to roasting. The most common decaffeination process used in the United States is supercritical carbon dioxide (CO_2) extraction. In this process, moistened green coffee beans are contacted with large quantities of supercritical CO_2 (CO_2 maintained at a pressure of about 4,000 pounds per square inch and temperatures between 90° and 100°C [194° and 212°F]), which removes about 97 percent of the caffeine from the beans. The caffeine is then recovered from the CO_2, typically using an activated carbon adsorption system. Another commonly used method is solvent extraction, typically using oil (extracted from roasted coffee) or ethyl acetate as a solvent. In this process, solvent is added to moistened green coffee beans to extract most of the caffeine from the beans. After the beans are removed from the solvent, they are steam-stripped to remove any residual solvent. The caffeine is then recovered from the solvent, and the solvent is re-used. Water extraction is also used for decaffeination, but little information on this process is available. Decaffeinated coffee beans have a residual caffeine content of about 0.1 percent on a dry basis. Not all facilities have decaffeination operations, and decaffeinated green coffee beans are purchased by many facilities that produce decaffeinated coffee.

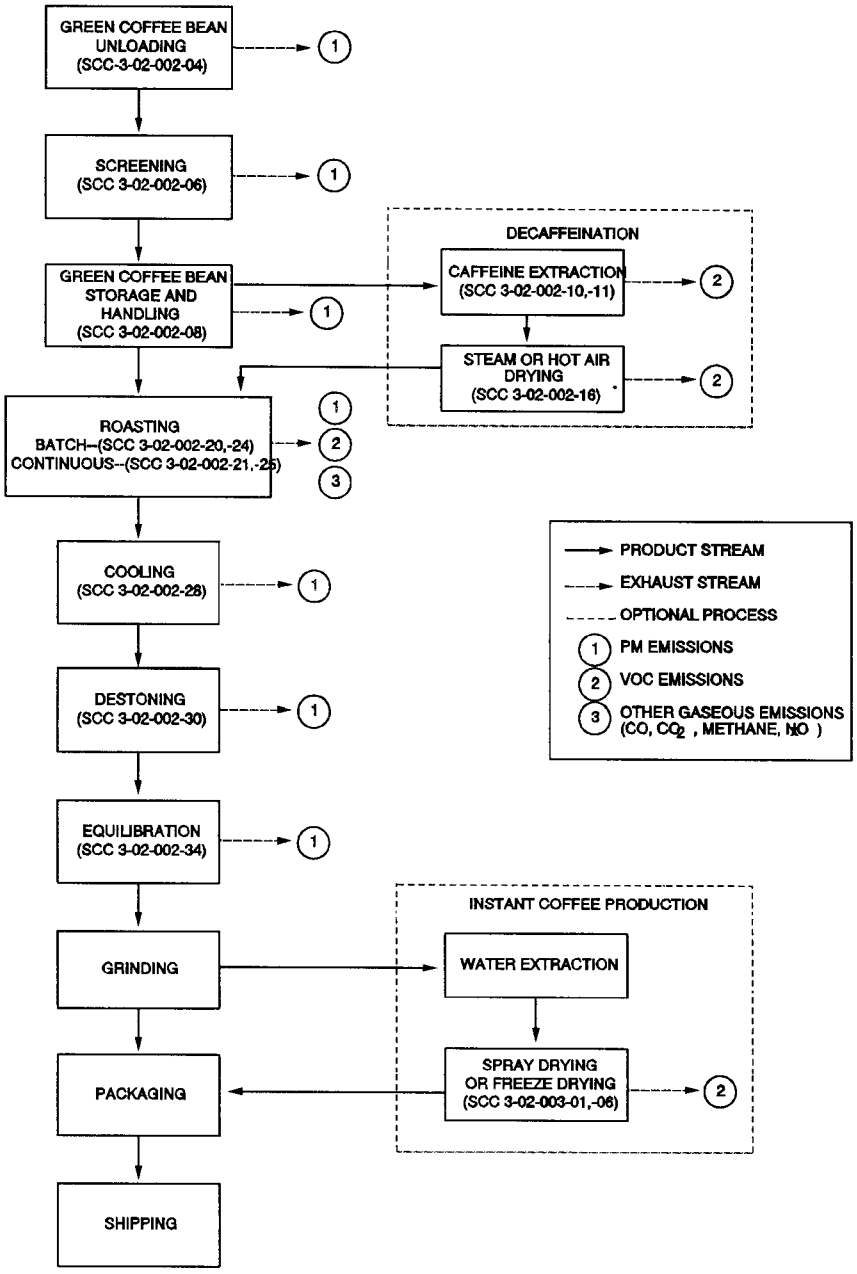

Figure 9.13.2-1. Typical coffee roasting operation.
(Source Classification Codes in parentheses.)

In the manufacture of instant coffee, extraction follows the roasting and grinding operations. The soluble solids and volatile compounds that provide aroma and flavor are extracted from the coffee beans using water. Water heated to about 175°C (347°F) under pressurized conditions (to maintain the water as liquid) is used to extract all of the necessary solubles from the coffee beans. Manufacturers use both batch and continuous extractors. Following extraction, evaporation or freeze-concentration is used to increase the solubles concentration of the extract. The concentrated extracts are then dried in either spray dryers or freeze dryers. Information on the spray drying and freeze drying processes is not available.

9.13.2.3 Emissions And Controls

Particulate matter (PM), volatile organic compounds (VOC), organic acids, and combustion products are the principal emissions from coffee processing. Several operations are sources of PM emissions, including the cleaning and destoning equipment, roaster, cooler, and instant coffee drying equipment. The roaster is the main source of gaseous pollutants, including alcohols, aldehydes, organic acids, and nitrogen and sulfur compounds. Because roasters are typically natural gas-fired, carbon monoxide (CO) and carbon dioxide (CO_2) emissions are expected as a result of fuel combustion. Decaffeination and instant coffee extraction and drying operations may also be sources of small amounts of VOC. Emissions from the grinding and packaging operations typically are not vented to the atmosphere.

Particulate matter emissions from the receiving, storage, cleaning, roasting, cooling, and stoning operations are typically ducted to cyclones before being emitted to the atmosphere. Gaseous emissions from roasting operations are typically ducted to a thermal oxidizer or thermal catalytic oxidizer following PM removal by a cyclone. Some facilities use the burners that heat the roaster as thermal oxidizers. However, separate thermal oxidizers are more efficient because the desired operating temperature is typically between 650°C and 816°C (1200°F and 1500°F), which is 93°C to 260°C (200°F to 500°F) more than the maximum temperature of most roasters. Some facilities use thermal catalytic oxidizers, which require lower operating temperatures to achieve control efficiencies that are equivalent to standard thermal oxidizers. Catalysts are also used to improve the control efficiency of systems in which the roaster exhaust is ducted to the burners that heat the roaster. Emissions from spray dryers are typically controlled by a cyclone followed by a wet scrubber.

Table 9.13.2-1 presents emission factors for filterable PM and condensible PM emissions from coffee roasting operations. Table 9.13.2-2 presents emission factors for volatile organic compounds (VOC), methane, CO, and CO_2 emissions from roasting operations. Emissions from batch and continuous roasters are shown separately, but with the exception of CO emissions, the emissions from these two types of roasters appear to be similar.

Table 9.13.2-1. EMISSION FACTORS FOR COFFEE ROASTING OPERATIONS[a]

EMISSION FACTOR RATING: D

Source	Filterable PM, lb/ton	Condensible PM lb/ton
Batch roaster with thermal oxidizer[b] (SCC 3-02-002-20)	0.12	ND
Continuous cooler with cyclone[c] (SCC 3-02-002-28)	0.028	ND
Continuous roaster[d] (SCC 3-02-002-21)	0.66	ND
Continuous roaster with thermal oxidizer (SCC 3-02-002-21)	0.092[e]	0.10[c]
Green coffee bean screening, handling, and storage system with fabric filter[f] (SCC 3-02-002-08)	0.059	ND
Destoner (SCC 3-02-002-30)	ND	ND
Equilibration (SCC 3-02-002-34)	ND	ND

[a] Emission factors are based on green coffee bean feed. Factors represent uncontrolled emissions unless noted. SCC = Source Classification Code. ND = no data. D-rated and E-rated emission factors are based on limited test data; these factors may not be representative of the industry.
[b] References 12,14.
[c] Reference 15.
[d] References 8-9.
[e] References 7-9,11,15. Includes data from thermal catalytic oxidizers.
[f] Reference 16. EMISSION FACTOR RATING: E.

Table 9.13.2-2. EMISSION FACTORS FOR COFFEE ROASTING OPERATIONS[a]

EMISSION FACTOR RATING: D

Source	VOC[b], lb/ton	Methane, lb/ton	CO, lb/ton	CO_2, lb/ton
Batch roaster[c] (SCC 3-02-002-20)	0.86	ND	ND	180
Batch roaster with thermal oxidizer (SCC 3-02-002-20)	0.047[d]	ND	0.55[d]	530[e]
Continuous roaster (SCC 3-02-002-21)	1.4[f]	0.26[g]	1.5[h]	120[j]
Continuous roaster with thermal oxidizer (SCC 3-02-002-21)	0.16[k]	0.15[m]	0.098[k]	200[n]
Decaffeination: solvent or supercritical CO_2 extraction (SCC 3-02-002-10,-11)	ND	ND	ND	ND
Steam or hot air dryer (SCC 3-02-002-16)	ND	ND	ND	ND
Spray drying (SCC 3-02-003-01)	ND	ND	ND	ND
Freeze drying (SCC 3-02-003-06)	ND	ND	ND	ND

[a] Emission factors are based on green coffee bean feed. Factors represent uncontrolled emissions unless noted. SCC = Source Classification Code. ND = no data. D-rated and E-rated emission factors are based on limited test data; these factors may not be representative of the industry.
[b] Volatile organic compounds as methane. Measured using GC/FID.
[c] Reference 14.
[d] References 12-14.
[e] References 12,14.
[f] References 8-9,11,15.
[g] References 8-9,11,15. EMISSION FACTOR RATING: E.
[h] References 8-9,15.
[j] References 8-9,11,15. EMISSION FACTOR RATING: C.
[k] References 8-9,11,15. Includes data from thermal catalytic oxidizers.
[m] References 8-9,11,15. Includes data from thermal catalytic oxidizers. EMISSION FACTOR RATING: E.
[n] References 9,11,15. Includes data from thermal catalytic oxidizers.

References For Section 9.13.2

1. M. N. Clifford and K. C. Willson, *COFFEE--Botany, Biochemistry And Production Of Beans And Beverage,* The AVI Publishing Company, Inc., Westport, CT, 1985.

2. R. G. Ostendorf (ed.), "Coffee Processing", *Air Pollution Engineering Manual,* Van Nostrand Reinhold, New York, NY, 1992.

3. J. M. L. Penninger, *Supercritical Fluid Technology--Potential In The Fine Chemicals And Pharmaceutical Industry*, Presented at the Workshop on Prevention of Waste and Emissions in the Fine Chemicals/Pharmaceutical Industry, Cork, Ireland, October 1993.

4. Telephone communication between B. Shrager, Midwest Research Institute, Cary, NC, and M. Wood, Tetley's Corporation, Palisades Park, NJ, December 20, 1994.

5. R. J. Clarke and R. MacRae, editors, *Coffee, Volume 2: Technology*, Elsevier Science Publishing Company, Inc., New York, NY, 1987.

6. G. Wasserman *et al*, "Coffee", *Kirk-Othmer Encyclopedia Of Chemical Technology*, 4th. Ed., Volume No. 6, John Wiley & Sons, Inc., 1992.

7. *Source Test Report, Particulate Emissions, Premium Coffee, Wall, New Jersey*, Princeton Testing Lab, Princeton, NJ, January 1987.

8. *Compliance Stack Sampling Report For Hills Brothers Coffee, Inc., Edgewater, New Jersey,* Ambient Engineering, Inc., Parlin, NJ, September 23, 1988.

9. *Stack Sampling Report For Hills Brothers Coffee, Inc., Edgewater, New Jersey, On Thermal Oxidizer #22 Inlet/Outlet,* Ambient Engineering, Inc., Parlin, NJ, October 5, 1988.

10. *Compliance Stack Sampling Report For General Foods Corporation, Maxwell House Division, Hoboken, New Jersey, On Thermal Oxidizer Inlet And Outlet*, Recon Systems, Inc., Three Bridges, NJ, March 13, 1989.

11. *Nestle Foods Corporation Compliance Emission Testing Report*, AirNova, Inc., Pennsauken, NJ, October 1990.

12. *Source Test Report For Particulate, Volatile Organic Compounds, And Carbon Monoxide Emissions From The Coffee Roaster 7D Thermal Oxidizer At General Foods-Maxwell House Division, Hoboken, New Jersey*, Air Consulting and Engineering, Inc., Gainesville, FL, December 20, 1990.

13. *Source Test Report For Volatile Organic Compounds And Carbon Monoxide Emissions From The Coffee Roaster 7D Thermal Oxidizer At General Foods-Maxwell House Division, Hoboken, New Jersey*, Air Consulting and Engineering, Inc., Gainesville, FL, May 9, 1991.

14. *Melitta USA, Inc., Blaw Knox Roaster Emission Compliance Test Program*, AirNova, Inc, Pennsauken, NJ, February 1992.

15. *Nestle Beverage Co. Source Test Report, Coffee Roaster And Cooler*, Best Environmental, Inc., San Leandro, CA, October 1, 1992.

16. *Summary Of Source Test Results*, Bay Area Air Quality Management District, San Francisco, CA, January 1991.

9.13.3 Snack Chip Deep Fat Frying

9.13.3.1 General[1-3]

The production of potato chips, tortilla chips, and other related snack foods is a growing, competitive industry. Sales of such snack chips in the United States are projected to grow 5.7 percent between 1991 and 1995. Between 1987 and 1991, potato chip sales increased from 649×10^6 kilograms (kg) to 712×10^6 kg ($1,430 \times 10^6$ pounds [lb] to $1,570 \times 10^6$ lb), an increase of 63×10^6 kg (140×10^6 lb) (10 percent). Snack chip plants are widely dispersed across the country, with the highest concentrations in California and Texas.

New products and processes are being developed to create a more health-conscious image for snack chips. Examples include the recent introduction of multigrain chips and the use of vegetable oils (noncholesterol) in frying. Health concerns are also encouraging the promotion and introduction of nonfried snack products like pretzels, popcorn, and crackers.

9.13.3.2 Process Description[1]

Vegetables and other raw foods are cooked by industrial deep fat frying and are packaged for later use by consumers. The batch frying process consists of immersing the food in the cooking oil until it is cooked and then removing it from the oil. When the raw food is immersed in hot cooking oil, the oil replaces the naturally occurring moisture in the food as it cooks. Batch and continuous processes may be used for deep fat frying. In the continuous frying method, the food is moved through the cooking oil on a conveyor. Potato chips are one example of a food prepared by deep fat frying. Other examples include corn chips, tortilla corn chips, and multigrain chips.

Figure 9.13.3-1 provides general diagrams for the deep fat frying process for potato chips and other snack chips. The differences between the potato chip process and other snack chip processing operations are also shown. Some snack food processes (e. g., tortilla chips) include a toasting step. Because the potato chip processes represent the largest industry segment, they are discussed here as a representative example.

In the initial potato preparation, dirt, decayed potatoes, and other debris are first removed in cleaning hoppers. The potatoes go next to washers, then to abrasion, steam, or lye peelers. Abrasion is the most popular method. Preparation is either batch or continuous, depending on the number of potatoes to be peeled.

The next step is slicing, which is performed by a rotary slicer. Potato slice widths will vary with the condition of the potatoes and with the type of chips being made. The potato slices move through rotating reels where high-pressure water separates the slices and removes starch from the cut surfaces. The slices are then transferred to the rinse tank for final rinsing.

Next, the surface moisture is removed by 1 or more of the following methods: perforated revolving drum, sponge rubber-covered squeeze roller, compressed air systems, vibrating mesh belt, heated air, or centrifugal extraction.

The partially dried chips are then fried. Most producers use a continuous process, in which the slices are automatically moved through the fryer on a mesh belt. Batch frying, which is used for

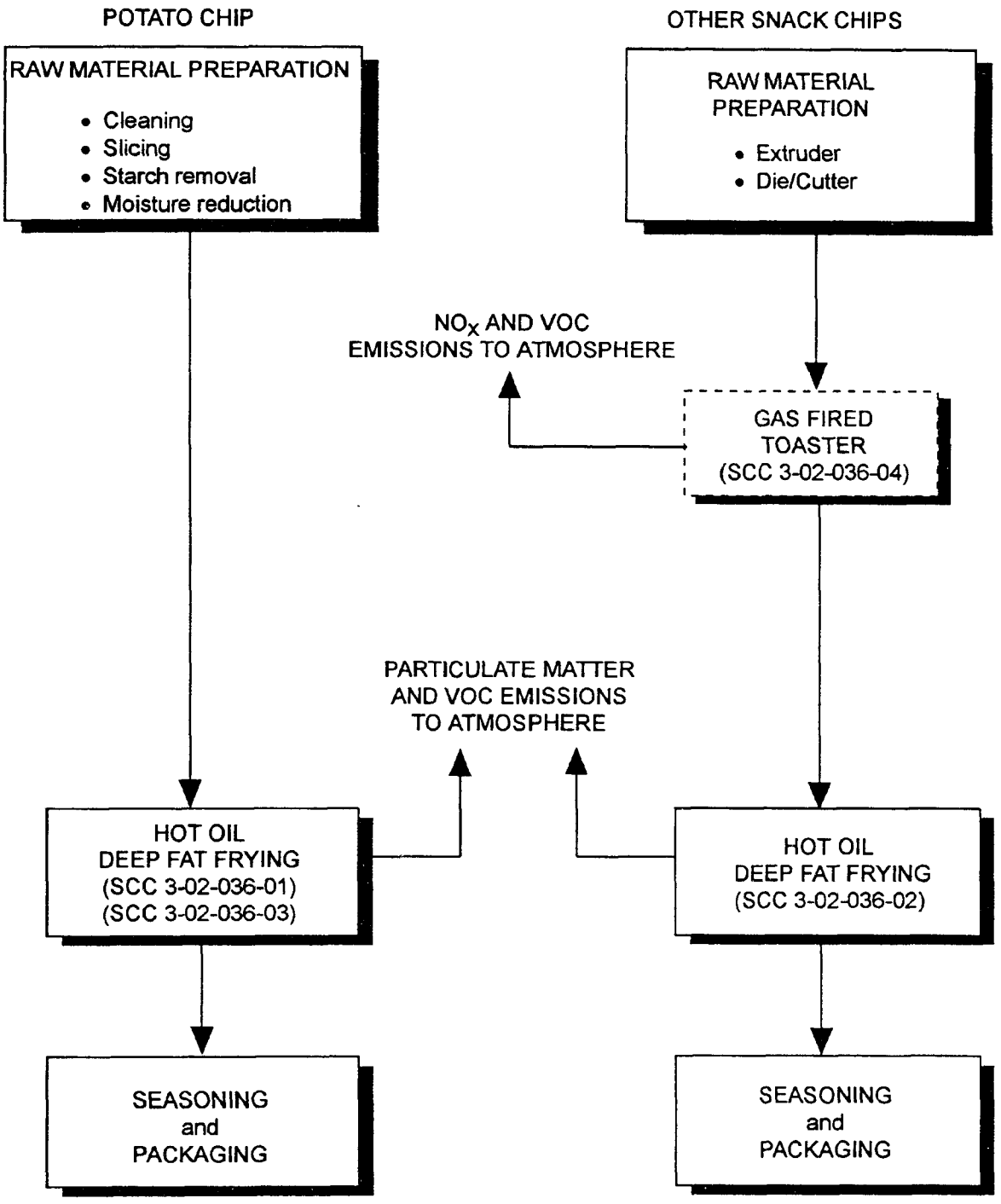

Figure 9.13.3-1. Generalized deep fat frying process for snack foods. (Source Classification Codes in parentheses.)

a smaller quantity of chips, involves placing the chips in a frying kettle for a period of time and then removing them. A variety of oils may be used for frying chips, with cottonseed, corn, and peanut oils being the most popular. Canola and soybean oils also are used. Animal fats are rarely used in this industry.

As indicated in Figure 9.13.3-1, the process for other snack chips is similar to that for potato chip frying. Typically, the raw material is extruded and cut before entering the fryer. In some cases, the chips may be toasted before frying.

9.13.3.2 Emissions And Controls[2-3]

Emissions -

Particulate matter is the major air pollutant emitted from the deep fat frying process. Emissions are released when moist foodstuff, such as potatoes, is introduced into hot oil. The rapid vaporization of the moisture in the foodstuff results in violent bubbling, and cooking oil droplets, and possibly vapors, become entrained in the water vapor stream. The emissions are exhausted from the cooking vat and into the ventilation system. Where emission controls are employed, condensed water and oil droplets in the exhaust stream are collected by control devices before the exhaust is routed to the atmosphere. The amount of particulate matter emitted depends on process throughput, oil temperature, moisture content of the feed material, equipment design, and stack emission controls.

Volatile organic compounds (VOC) are also produced in deep fat frying, but they are not a significant percentage of total frying emissions because of the low vapor pressure of the vegetable oils used. However, when the oil is entrained into the water vapor produced during frying, the oil may break down into volatile products. Small amounts of VOC and combustion products may also be emitted from toasters, but quantities are expected to be negligible.

Tables 9.13.3-1 and 9.13.3-2 provide uncontrolled and controlled particulate matter emission factors, in metric and English units, for snack chip frying. Table 9.13.3-3 provides VOC emission factors, in metric and English units, for snack chip frying without controls. Emission factors are calculated as the weight of particulate matter or VOC per ton of finished product, including salt and seasonings.

Controls -

Particulate matter emission control equipment is typically installed on potato chip fryer exhaust streams because of the elevated particulate loadings caused by the high volume of water contained in potatoes. Examples of control devices are mist eliminators, impingement devices, and wet scrubbers. One manufacturer has indicated that catalytic and thermal incinerators are not practical because of the high moisture content of the exhaust stream.

Table 9.13.3-1 (Metric Units). PARTICULATE MATTER EMISSION FACTORS FOR SNACK CHIP DEEP FAT FRYING[a]

EMISSION FACTOR RATING: E (except as noted)

Process	Filterable PM		Condensable PM			Total PM-10
	PM	PM-10	Inorganic	Organic	Total	
Continuous deep fat fryer--potato chips[b] (SCC 3-02-036-01)	0.83	ND	ND	ND	0.19	ND
Continuous deep fat fryer--other snack chips[b] (SCC 3-02-036-02)	0.28	ND	ND	ND	0.12	ND
Continuous deep fat fryer with standard mesh pad mist eliminator--potato chips[c] (SCC 3-02-036-01)	0.35[d]	0.30	0.0040[d]	0.19[d]	0.19	0.49
Continuous deep fat fryer with high-efficiency mesh pad mist eliminator--potato chips[e] (SCC 3-02-036-01)	0.12	ND	0.12	0.064	0.18	ND
Continuous deep fat fryer with standard mesh pad mist eliminator--other snack chips[f] (SCC 3-02-036-02)	0.11[d]	0.088	0.017	0.022	0.039	0.13
Batch deep fat fryer with hood scrubber--potato chips[g] (SCC 3-02-036-03)	0.89[d]	ND	0.66[d]	0.17	0.83	ND

[a] Factors are for uncontrolled emissions, except as noted. All emission factors in kg/Mg of chips produced. SCC = Source Classification Code. ND = no data.

[b] Reference 3.

[c] References 6, 10-11. The standard mesh pad mist eliminator, upon which these emission factors are based, includes a single, 6-inch, 2-layer mist pad that operates with a pressure drop of about 0.5-inch water column (when clean).

[d] EMISSION FACTOR RATING: D

[e] References 4-5. The high-efficiency mesh pad eliminator, upon which these emission factors are based, includes a coarse-weave 4-inch mist pad and a 6-inch fine weave pad, and operates with a 2.5- to 3-inch water column pressure drop (when clean).

[f] References 6-7.

[g] References 8-9.

Table 9.13.3-2 (English Units). PARTICULATE MATTER EMISSION FACTORS FOR SNACK CHIP DEEP FAT FRYING[a]

EMISSION FACTOR RATING: E (except as noted)

Process	Filterable PM		Condensable PM			Total PM-10
	PM	PM-10	Inorganic	Organic	Total	
Continuous deep fat fryer--potato chips[b] (SCC 3-02-036-01)	1.6	ND	ND	ND	0.39	ND
Continuous deep fat fryer--other snack chips[b] (SCC 3-02-036-02)	0.56	ND	ND	ND	0.24	ND
Continuous deep fat fryer with standard mesh pad mist eliminator--potato chips[c] (SCC 3-02-036-01)	0.70[d]	0.60	0.0080[d]	0.37[d]	0.38	0.98
Continuous deep fat fryer with high-efficiency mesh pad mist eliminator--potato chips[e] (SCC 3-02-036-01)	0.24	ND	0.23	0.13	0.36	ND
Continuous deep fat fryer with standard mesh pad mist eliminator--other snack chips[f] (SCC 3-02-036-02)	0.22[d]	0.18	0.034	0.044	0.078	0.26
Batch deep fat fryer with hood scrubber--potato chips[g] (SCC 3-02-036-03)	1.8[d]	ND	1.3[d]	0.33	1.6	ND

[a] Factors are for uncontrolled emissions, except as noted. All emission factors in lb/ton of chips produced. SCC = Source Classification Code. ND = no data.

[b] Reference 3.

[c] References 6, 10-11. The standard mesh pad mist eliminator, upon which these emission factors are based, includes a single, 6-inch, 2-layer mist pad that operates with a pressure drop of about 0.5 inch water column (when clean).

[d] EMISSION FACTOR RATING: D

[e] References 4-5. The high-efficiency mesh pad eliminator, upon which these emission factors are based, includes a coarse-weave 4-inch mist pad and a 6-inch fine weave pad and operates with a 2.5- to 3-inch water column pressure drop (when clean).

[f] References 6-7.

[g] References 8-9.

Table 9.13.3-3 (Metric Units). UNCONTROLLED VOC EMISSION FACTORS FOR SNACK CHIP DEEP FAT FRYING[a,b]

EMISSION FACTOR RATING: E

Process	VOC	
	kg/Mg	lb/ton
Deep fat fryer—potato chips (SCC 3-02-036-01)	0.0099	0.020
Deep fat fryer—other snack chips (SCC 3-02-036-02)	0.043	0.085

[a] Reference 3. SCC = Source Classification Code.
[b] Expressed as equivalent weight of methane (CH_4)/unit weight of product.

References For Section 9.13.3

1. O. Smith, *Potatoes: Production, Storing, Processing*, Avi Publishing, Westport, CT, 1977.

2. *Background Document For AP-42 Section 9.13.3, Snack Chip Deep Fat Frying*, Midwest Research Institute, Kansas City, MO, August 1994.

3. *Characterization Of Industrial Deep Fat Fryer Air Emissions*, Frito-Lay Inc., Plano, TX, 1991.

4. *Emission Performance Testing For Two Fryer Lines*, Western Environmental Services, Redondo Beach, CA, November 19, 20, and 21, 1991.

5. *Emission Performance Testing On One Continuous Fryer*, Western Environmental Services, Redondo Beach, CA, January 26, 1993.

6. *Emission Performance Testing Of Two Fryer Lines*, Western Environmental Services, Redondo Beach, CA, November 1990.

7. *Emission Performance Testing Of One Tortilla Continuous Frying Line*, Western Environmental Services, Redondo Beach, CA, October 20-21, 1992.

8. *Emission Performance Testing Of Fryer No. 5*, Western Environmental Services, Redondo Beach, CA, February 4-5, 1992.

9. *Emission Performance Testing Of Fryer No. 8*, Western Environmental Services, Redondo Beach, CA, February 3-4, 1992.

10. *Emission Performance Testing Of Two Fryer Lines*, Western Environmental Services, Redondo Beach, CA, November 1989.

11. *Emission Performance Testing Of Two Fryer Lines*, Western Environmental Services, Redondo Beach, CA, June 1989.

9.13.4 Yeast Production

9.13.4.1 General[1]

Baker's yeast is currently manufactured in the United States at 13 plants owned by 6 major companies. Two main types of baker's yeast are produced, compressed (cream) yeast and dry yeast. The total U. S. production of baker's yeast in 1989 was 223,500 megagrams (Mg) (245,000 tons). Of the total production, approximately 85 percent of the yeast is compressed (cream) yeast, and the remaining 15 percent is dry yeast. Compressed yeast is sold mainly to wholesale bakeries, and dry yeast is sold mainly to consumers for home baking needs. Compressed and dry yeasts are produced in a similar manner, but dry yeasts are developed from a different yeast strain and are dried after processing. Two types of dry yeast are produced, active dry yeast (ADY) and instant dry yeast (IDY). Instant dry yeast is produced from a faster-reacting yeast strain than that used for ADY. The main difference between ADY and IDY is that ADY has to be dissolved in warm water before usage, but IDY does not.

9.13.4.2 Process Description[1]

Figure 9.13.4-1 is a process flow diagram for the production of baker's yeast. The first stage of yeast production consists of growing the yeast from the pure yeast culture in a series of fermentation vessels. The yeast is recovered from the final fermentor by using centrifugal action to concentrate the yeast solids. The yeast solids are subsequently filtered by a filter press or a rotary vacuum filter to concentrate the yeast further. Next, the yeast filter cake is blended in mixers with small amounts of water, emulsifiers, and cutting oils. After this, the mixed press cake is extruded and cut. The yeast cakes are then either wrapped for shipment or dried to form dry yeast.

Raw Materials[1-3] -

The principal raw materials used in producing baker's yeast are the pure yeast culture and molasses. The yeast strain used in producing compressed yeast is *Saccharomyces cerevisiae*. Other yeast strains are required to produce each of the 2 dry yeast products, ADY and IDY. Cane molasses and beet molasses are the principal carbon sources to promote yeast growth. Molasses contains 45 to 55 weight percent fermentable sugars, in the forms of sucrose, glucose, and fructose.

The amount and type of cane and beet molasses used depend on the availability of the molasses types, costs, and the presence of inhibitors and toxins. Usually, a blend consisting of both cane and beet molasses is used in the fermentations. Once the molasses mixture is blended, the pH is adjusted to between 4.5 and 5.0 because an alkaline mixture promotes bacteria growth. Bacteria growth occurs under the same conditions as yeast growth, making pH monitoring very important. The molasses mixture is clarified to remove any sludge and is then sterilized with high-pressure steam. After sterilization, it is diluted with water and held in holding tanks until it is needed for the fermentation process.

A variety of essential nutrients and vitamins is also required in yeast production. The nutrient and mineral requirements include nitrogen, potassium, phosphate, magnesium, and calcium, with traces of iron, zinc, copper, manganese, and molybdenum. Normally, nitrogen is supplied by adding ammonium salts, aqueous ammonia, or anhydrous ammonia to the feedstock. Phosphates and magnesium are added, in the form of phosphoric acid or phosphate salts and magnesium salts. Vitamins are also required for yeast growth (biotin, inositol, pantothenic acid, and thiamine).

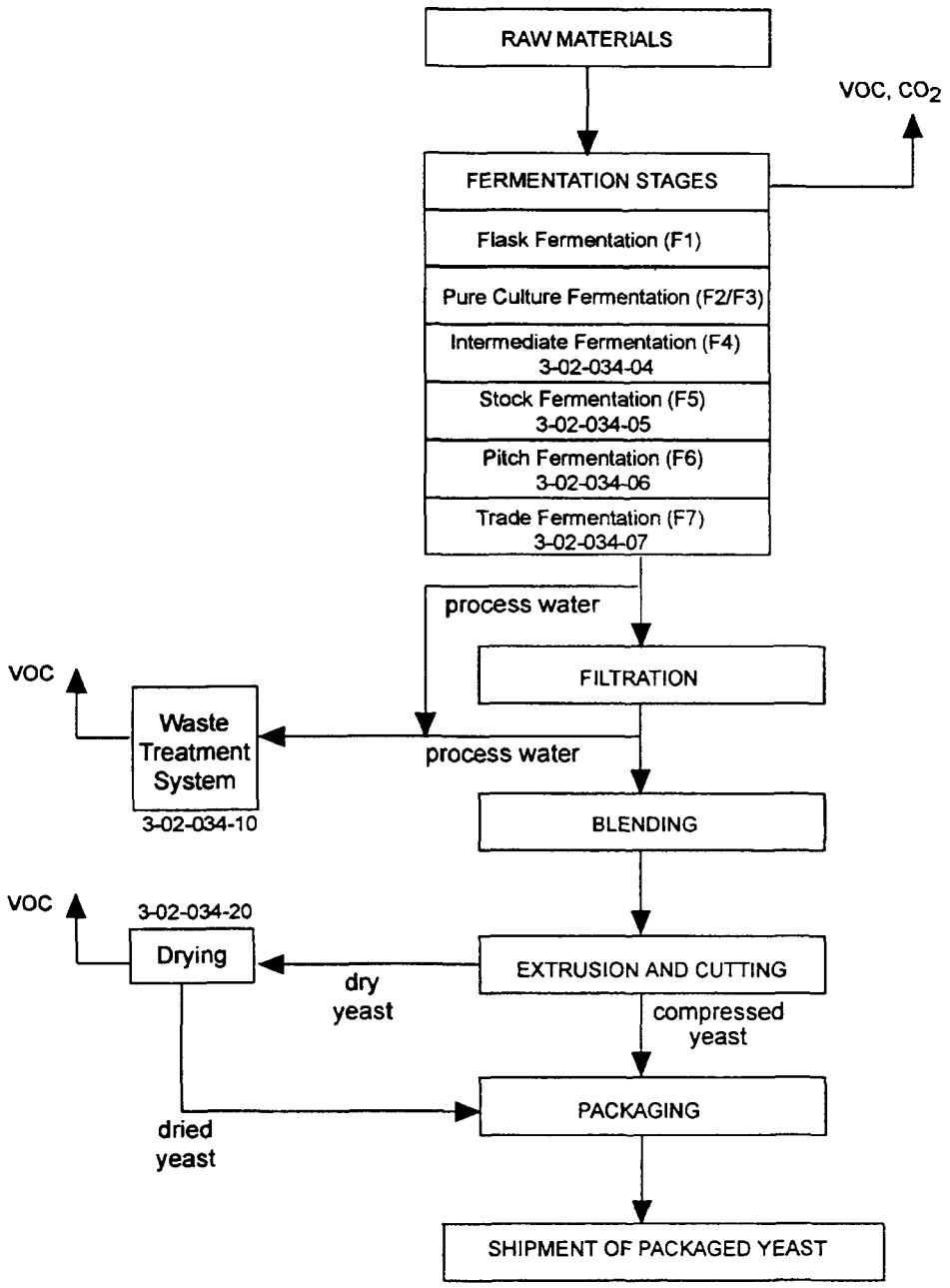

Figure 9.13.4-1. Typical process flow diagram for the seven-stage production of baker's yeast, with Source Classification Codes shown for compressed yeast. Use 3-02-035-XX for compressed yeast.

Thiamine is added to the feedstock. Most other vitamins and nutrients are already present in sufficient amounts in the molasses malt.

Fermentation[1-3] -

Yeast cells are grown in a series of fermentation vessels. Yeast fermentation vessels are operated under aerobic conditions (free oxygen or excess air present) because under anaerobic conditions (limited or no oxygen) the fermentable sugars are consumed in the formation of ethanol and carbon dioxide, which results in low yeast yields.

The initial stage of yeast growth takes place in the laboratory. A portion of the pure yeast culture is mixed with molasses malt in a sterilized flask, and the yeast is allowed to grow for 2 to 4 days. The entire contents of this flask are used to inoculate the first fermentor in the pure culture stage. Pure culture fermentations are batch fermentations, where the yeast is allowed to grow for 13 to 24 hours. Typically, 1 to 2 fermentors are used in this stage of the process. The pure culture fermentations are basically a continuation of the flask fermentation, except that they have provisions for sterile aeration and aseptic transfer to the next stage.

Following the pure culture fermentations, the yeast mixture is transferred to an intermediate fermentor that is either batch or fed-batch. The next fermentation stage is a stock fermentation. The contents from the intermediate fermentor are pumped into the stock fermentor, which is equipped for incremental feeding with good aeration. This stage is called stock fermentation, because after fermentation is complete, the yeast is separated from the bulk of the fermentor liquid by centrifuging, which produces a stock, or pitch, of yeast for the next stage. The next stage, pitch fermentation, also produces a stock, or pitch, of yeast. Aeration is vigorous, and molasses and other nutrients are fed incrementally. The liquor from this fermentor is usually divided into several parts for pitching the final trade fermentations (adding the yeast to start fermentation). Alternately, the yeast may be separated by centrifuging and stored for several days before its use in the final trade fermentations.

The final trade fermentation has the highest degree of aeration, and molasses and other nutrients are fed incrementally. Large air supplies are required during the final trade fermentations, so these vessels are often started in a staggered fashion to reduce the size of the air compressors. The duration of the final fermentation stages ranges from 11 to 15 hours. After all of the required molasses has been fed into the fermentor, the liquid is aerated for an additional 0.5 to 1.5 hours to permit further maturing of the yeast, making it more stable for refrigerated storage.

The amount of yeast growth in the main fermentation stages described above increases with each stage. Yeast growth is typically 120 kilograms (270 pounds) in the intermediate fermentor, 420 kilograms (930 pounds) in the stock fermentor, 2,500 kilograms (5,500 pounds) in the pitch fermentor, and 15,000 to 100,000 kilograms (33,000 to 220,000 pounds) in the trade fermentor.

The sequence of the main fermentation stages varies among manufacturers. About half of existing yeast operations are 2-stage processes, and the remaining are 4-stage processes. When the 2-stage final fermentation series is used, the only fermentations following the pure culture stage are the stock and trade fermentations. When the 4-stage fermentation series is used, the pure culture stage is followed by intermediate, stock, pitch, and trade fermentations.

Harvesting And Packaging[1-2] -

Once an optimum quantity of yeast has been grown, the yeast cells are recovered from the final trade fermentor by centrifugal yeast separators. The centrifuged yeast solids are further concentrated by a filter press or rotary vacuum filter. A filter press forms a filter cake containing 27 to 32 percent solids. A rotary vacuum filter forms cakes containing approximately 33 percent solids. This filter cake is then blended in mixers with small amounts of water, emulsifiers, and cutting oils to form the end product. The final packaging steps, as described below, vary depending on the type of yeast product.

In compressed yeast production (SCC 3-02-035-XX), emulsifiers are added to give the yeast a white, creamy appearance and to inhibit water spotting of the yeast cakes. A small amount of oil, usually soybean or cottonseed oil, is added to help extrude the yeast through nozzles to form continuous ribbons of yeast cake. The ribbons are cut, and the yeast cakes are wrapped and cooled to below 8°C (46°F), at which time they are ready for shipment in refrigerated trucks.

In dry yeast production (SCC 3-02-034-XX), the product is sent to an extruder after filtration, where emulsifiers and oils (different from those used for compressed yeast) are added to texturize the yeast and to aid in extruding it. After the yeast is extruded in thin ribbons, it is cut and dried in either a batch or a continuous drying system. Following drying, the yeast is vacuum packed or packed under nitrogen gas before heat sealing. The shelf life of ADY and IDY at ambient temperature is 1 to 2 years.

9.13.4.3 Emissions[1,4-5]

Volatile organic compound (VOC) emissions are generated as byproducts of the fermentation process. The 2 major VOCs emitted are ethanol and acetaldehyde. Other byproducts consist of other alcohols, such as butanol, isopropyl alcohol, 2,3-butanediol, organic acids, and acetates. Based on emission test data, approximately 80 to 90 percent of total VOC emissions is ethanol, and the remaining 10 to 20 percent consists of other alcohols and acetaldehyde. Acetaldehyde is a hazardous air pollutant as defined under Section 112 of the *Clean Air Act*.

Volatile byproducts form as a result of either excess sugar (molasses) present in the fermentor or an insufficient oxygen supply to it. Under these conditions, anaerobic fermentation occurs, breaking down the excess sugar into alcohols and carbon dioxide. When anaerobic fermentation occurs, 2 moles of ethanol and 2 moles of carbon dioxide are formed from 1 mole of glucose. Under anaerobic conditions, the ethanol yield is increased, and yeast yields are decreased. Therefore, in producing baker's yeast, it is essential to suppress ethanol formation in the final fermentation stages by incremental feeding of the molasses mixture with sufficient oxygen to the fermentor.

The rate of ethanol formation is higher in the earlier stages (pure culture stages) than in the final stages of the fermentation process. The earlier fermentation stages are batch fermentors, where excess sugars are present and less aeration is used during the fermentation process. These fermentations are not controlled to the degree that the final fermentations are controlled because the majority of yeast growth occurs in the final fermentation stages. Therefore, there is no economical reason for manufacturers to equip the earlier fermentation stages with process control equipment.

Another potential emission source at yeast manufacturing facilities is the system used to treat process waste waters. If the facility does not use an anaerobic biological treatment system, significant quantities of VOCs could be emitted from this stage of the process. For more information on waste water treatment systems as an emission source of VOCs, please refer to EPA's Control Technology Center document on industrial waste water treatment systems, *Industrial Wastewater Volatile Organic Compound Emissions - Background Information For BACT/LAER*, or see Section 4.3 of AP-42. At facilities manufacturing dry yeast, VOCs may also be emitted from the yeast dryers, but no information is available on the relative quantity of VOC emissions from this source.

9.13.4.4 Controls[6]

Only 1 yeast manufacturing facility uses an add-on pollution control system to reduce VOC emissions from the fermentation process. However, all yeast manufacturers suppress ethanol formation through varying degrees of process control, such as incrementally feeding the molasses mixture to the fermentors so that excess sugars are not present, or supplying sufficient oxygen to the fermentors to optimize the dissolved oxygen content of the liquid in the fermentor. The adequacy of oxygen distribution depends upon the proper design and operation of the aeration and mechanical agitation systems of the fermentor. The distribution of oxygen by the air sparger system to the malt mixture is critical. If oxygen is not being transferred uniformly throughout the malt, then ethanol

will be produced in the oxygen-deficient areas of the fermentor. The type and position of baffles and/or a highly effective mechanical agitation system can ensure proper distribution of oxygen.

A more sophisticated form of process control involves using a continuous monitoring system and feedback control. In such a system, process parameters are monitored, and the information is sent to a computer. The computer is then used to calculate sugar consumption rates through material balance techniques. Based on the calculated data, the computer continuously controls the addition of molasses. This type of system is feasible, but it is difficult to design and implement. Such enhanced process control measures can suppress ethanol formation from 75 to 95 percent.

The 1 facility with add-on control uses a wet scrubber followed by a biological filter. Performance data from this unit suggest an emission control efficiency of better than 90 percent.

9.13.4.5 Emission Factors[1,6-9]

Table 9.13.4-1 provides emission factors for a typical yeast fermentation process with a moderate degree of process control. The process emission factors in Table 9.13.4-1 were developed from 4 test reports from 3 yeast manufacturing facilities. Separate emission factors are given for intermediate, stock/pitch, and trade fermentations. The emission factors in Table 9.13.4-1 are expressed in units of VOC emitted per fermentor per unit of yeast produced in that fermentor.

In order to use the emission factors for each fermentor, the amount of yeast produced in each fermentor must be known. The following is an example calculation for a typical facility:

Fermentation Stage	Yeast Yield Per Batch, lb (A)	No. Of Batches Processed Per Year, #/yr (B)	Total Yeast Production Per Stage, tons/yr (C = A x B/2,000)	Emission Factor, lb/ton (D)	Emissions, lb (E = C x D)	Percent of Total Emissions
Intermediate	265	156	21	36	756	0.84
Stock	930	208	97	5	485	0.54
Pitch	5,510	208	573	5	2,865	3.18
Trade	33,070	1,040	17,196	5	85,980	95.44
TOTAL	—	—	—	—	90,086	100

In most cases, the annual yeast production per stage will not be available. However, a reasonable estimate can be determined based on the emission factor for the trade fermentor and the total yeast production for the facility. Trade fermentors produce the majority of all VOCs emitted from the facility because of the number of batches processed per year and of the amount of yeast grown in these fermentors. Based on emission test data and process data regarding the number of batches processed per year, 80 to 90 percent of VOCs emitted from fermentation operations are a result of the trade fermentors.

Using either a 2-stage or 4-stage fermentation process has no significant effect on the overall emissions for the facility. Facilities that use the 2-stage process may have larger fermentors or may produce more batches per year than facilities that use a 4-stage process. The main factors affecting emissions are the total yeast production for a facility and the degree of process control used.

Table 9.13.4-1 (Metric And English Units). VOLATILE ORGANIC COMPOUND (VOC) EMISSION FACTORS FOR YEAST MANUFACTURING[a]

EMISSION FACTOR RATING: E

Emission Point[b]	VOC[c]	
	VOC Emitted Per Stage Per Amount Of Yeast Produced In A Stage, kg VOC/Mg Yeast	VOC Emitted Per Stage Per Amount Of Yeast Produced In A Stage, lb VOC/ton Yeast
Fermentation stages[d]		
Flask (F1)	ND	ND
Pure culture (F2/F3)	ND	ND
Intermediate (F4) (SCC 3-02-034-04)	18	36
Stock (F5) (SCC 3-02-034-05)	2.5	5.0
Pitch (F6) (SCC 3-02-034-06)	2.5	5.0
Trade (F7) (SCC 3-02-034-07)	2.5	5.0
Waste treatment (SCC 3-02-034-10)	See Section 4.3 of AP-42	
Drying (SCC 3-02-034-20)	ND	ND

[a] References 1,6-10. Total VOC as ethanol. SCC = Source Classification Code. ND = no data. F numbers refer to fermentation stages (see Figure 9.13.4-1).

[b] Factors are for both dry yeast (SCC 3-02-034-XX) and compressed yeast (SCC 3-02-035-XX).

[c] Factors should be used only when plant-specific emission data are not available because of the high degree of emissions variability among facilities and among batches within a facility.

[d] Some yeast manufacturing facilities use a 2-stage final fermentation process, and others use a 4-stage final fermentation process. Factors for each stage cannot be summed to determine an overall emission factor for a facility, since they are based on yeast yields in each fermentor rather than total yeast production. Total yeast production for a facility equals only the yeast yield from the trade fermentations. Note that CO_2 is also a byproduct of fermentation, but no data are available on the amount emitted.

References For Section 9.13.4

1. *Assessment Of VOC Emissions And Their Control From Baker's Yeast Manufacturing Facilities*, EPA-450/3-91-027, U. S. Environmental Protection Agency, Research Triangle Park, NC, January 1992.

2. S. L. Chen and M. Chigar, "Production Of Baker's Yeast", *Comprehensive Biotechnology*, Volume 20, Pergamon Press, New York, NY, 1985.

3. G. Reed and H. Peppler, *Yeast Technology*, Avi Publishing Company, Westport, CT, 1973.

4. H. Y. Wang, *et al.*, "Computer Control Of Baker's Yeast Production", *Biotechnology And Bioengineering*, Cambridge, MA, Volume 21, 1979.

5. *Industrial Wastewater VOC Emissions - Background For BACT/LAER*, EPA-450/3-90-004, U. S. Environmental Protection Agency, Research Triangle Park, NC, March 1990.

6. Written communication from R. Jones, Midwest Research Institute, Cary, NC, to the project file, April 28, 1993.

7. *Fermentor Emissions Test Report*, Gannet Fleming, Inc., Baltimore, MD, October 1990.

8. *Final Test Report For Fermentor No. 5*, Gannett Fleming, Inc., Baltimore, MD, August 1990.

9. Written communication from J. Leatherdale, Trace Technologies, Bridgewater, NJ, to J. Hogan, Gist-brocades Food Ingredients, Inc., East Brunswick, NJ, April 7, 1989.

10. *Fermentor Emissions Test Report, Universal Foods, Inc., Baltimore, MD*, Universal Foods, Inc., Milwaukee, WI, 1990.

9.14 Tobacco Products

[Work In Progress]

9.15 Leather Tanning

[Work In Progress]

9.16 Agricultural Wind Erosion

[Work In Progress]

10. WOOD PRODUCTS INDUSTRY

Wood processing in this industry involves the conversion of trees into useful consumer products and/or building materials such as paper, charcoal, treated and untreated lumber, plywood, particle board, wafer board, and medium density fiber board. During the conversion processes, the major pollutants of concern are particulate, PM-10, and volatile organic compounds. There also may be speciated organic compounds that may be toxic or hazardous.

10.1 Lumber

[Work In Progress]

10.2 Chemical Wood Pulping

10.2.1 General

Chemical wood pulping involves the extraction of cellulose from wood by dissolving the lignin that binds the cellulose fibers together. The 4 processes principally used in chemical pulping are kraft, sulfite, neutral sulfite semichemical (NSSC), and soda. The first 3 display the greatest potential for causing air pollution. The kraft process alone accounts for over 80 percent of the chemical pulp produced in the United States. The choice of pulping process is determined by the desired product, by the wood species available, and by economic considerations.

10.2.2 Kraft Pulping

10.2.2.1 Process Description[1] -

The kraft pulping process (see Figure 10.2-1) involves the digesting of wood chips at elevated temperature and pressure in "white liquor", which is a water solution of sodium sulfide and sodium hydroxide. The white liquor chemically dissolves the lignin that binds the cellulose fibers together.

There are 2 types of digester systems, batch and continuous. Most kraft pulping is done in batch digesters, although the more recent installations are of continuous digesters. In a batch digester, when cooking is complete, the contents of the digester are transferred to an atmospheric tank usually referred to as a blow tank. The entire contents of the blow tank are sent to pulp washers, where the spent cooking liquor is separated from the pulp. The pulp then proceeds through various stages of washing, and possibly bleaching, after which it is pressed and dried into the finished product. The "blow" of the digester does not apply to continuous digester systems.

The balance of the kraft process is designed to recover the cooking chemicals and heat. Spent cooking liquor and the pulp wash water are combined to form a weak black liquor which is concentrated in a multiple-effect evaporator system to about 55 percent solids. The black liquor is then further concentrated to 65 percent solids in a direct-contact evaporator, by bringing the liquor into contact with the flue gases from the recovery furnace, or in an indirect-contact concentrator. The strong black liquor is then fired in a recovery furnace. Combustion of the organics dissolved in the black liquor provides heat for generating process steam and for converting sodium sulfate to sodium sulfide. Inorganic chemicals present in the black liquor collect as a molten smelt at the bottom of the furnace.

The smelt is dissolved in water to form green liquor, which is transferred to a causticizing tank where quicklime (calcium oxide) is added to convert the solution back to white liquor for return to the digester system. A lime mud precipitates from the causticizing tank, after which it is calcined in a lime kiln to regenerate quicklime.

For process heating, for driving equipment, for providing electric power, etc., many mills need more steam than can be provided by the recovery furnace alone. Thus, conventional industrial boilers that burn coal, oil, natural gas, or bark and wood are commonly used.

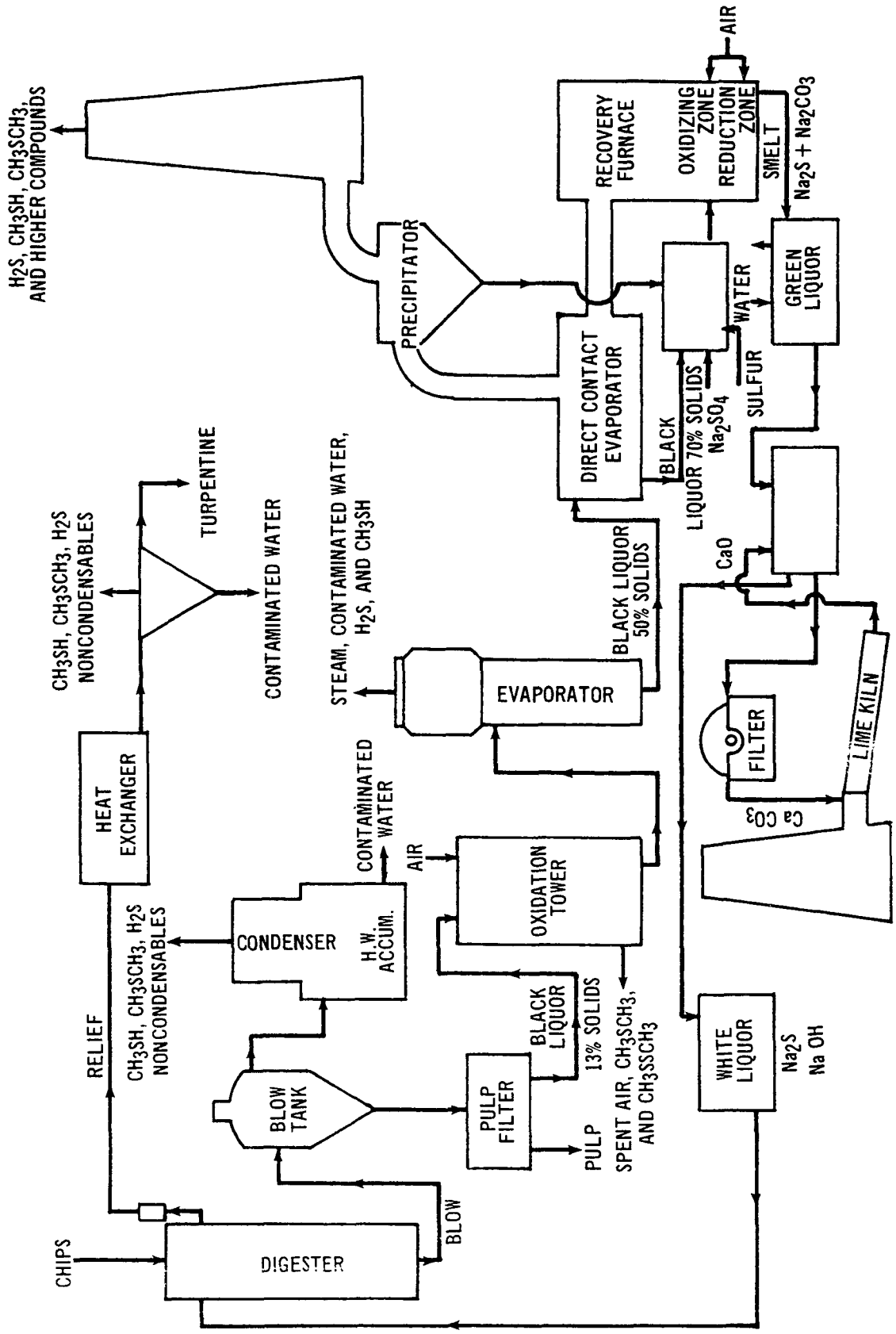

Figure 10.2-1. Typical kraft sulfate pulping and recovery process.

10.2.2.2 Emissions And Controls[1-7] -

Particulate emissions from the kraft process occur largely from the recovery furnace, the lime kiln and the smelt dissolving tank. These emissions are mainly sodium salts, with some calcium salts from the lime kiln. They are caused mostly by carryover of solids and sublimation and condensation of the inorganic chemicals.

Particulate control is provided on recovery furnaces in a variety of ways. In mills with either cyclonic scrubber or cascade evaporator as the direct-contact evaporator, further control is necessary, as these devices are generally only 20 to 50 percent efficient for particulates. Most often in these cases, an electrostatic precipitator (ESP) is employed after the direct-contact evaporator, for an overall particulate control efficiency of from 85 to more than 99 percent. Auxiliary scrubbers may be added at existing mills after a precipitator or a venturi scrubber to supplement older and less efficient primary particulate control devices.

Particulate control on lime kilns is generally accomplished by scrubbers. Electrostatic precipitators have been used in a few mills. Smelt dissolving tanks usually are controlled by mesh pads, but scrubbers can provide further control.

The characteristic odor of the kraft mill is caused by the emission of reduced sulfur compounds, the most common of which are hydrogen sulfide, methyl mercaptan, dimethyl sulfide, and dimethyl disulfide, all with extremely low odor thresholds. The major source of hydrogen sulfide is the direct contact evaporator, in which the sodium sulfide in the black liquor reacts with the carbon dioxide in the furnace exhaust. Indirect contact evaporators can significantly reduce the emission of hydrogen sulfide. The lime kiln can also be a potential source of odor, as a similar reaction occurs with residual sodium sulfide in the lime mud. Lesser amounts of hydrogen sulfide are emitted with the noncondensables of offgases from the digesters and multiple-effect evaporators.

Methyl mercaptan and dimethyl sulfide are formed in reactions with the wood component, lignin. Dimethyl disulfide is formed through the oxidation of mercaptan groups derived from the lignin. These compounds are emitted from many points within a mill, but the main sources are the digester/blow tank systems and the direct contact evaporator.

Although odor control devices, per se, are not generally found in kraft mills, emitted sulfur compounds can be reduced by process modifications and improved operating conditions. For example, black liquor oxidation systems, which oxidize sulfides into less reactive thiosulfates, can considerably reduce odorous sulfur emissions from the direct contact evaporator, although the vent gases from such systems become minor odor sources themselves. Also, noncondensable odorous gases vented from the digester/blow tank system and multiple effect evaporators can be destroyed by thermal oxidation, usually by passing them through the lime kiln. Efficient operation of the recovery furnace, by avoiding overloading and by maintaining sufficient oxygen, residence time, and turbulence, significantly reduces emissions of reduced sulfur compounds from this source as well. The use of fresh water instead of contaminated condensates in the scrubbers and pulp washers further reduces odorous emissions.

Several new mills have incorporated recovery systems that eliminate the conventional direct-contact evaporators. In one system, heated combustion air, rather than fuel gas, provides direct-contact evaporation. In another, the multiple-effect evaporator system is extended to replace the direct-contact evaporator altogether. In both systems, sulfur emissions from the recovery furnace/direct-contact evaporator can be reduced by more than 99 percent.

Sulfur dioxide is emitted mainly from oxidation of reduced sulfur compounds in the recovery furnace. It is reported that the direct contact evaporator absorbs about 75 percent of these emissions, and further scrubbing can provide additional control.

Potential sources of carbon monoxide emissions from the kraft process include the recovery furnace and lime kilns. The major cause of carbon monoxide emissions is furnace operation well above rated capacity, making it impossible to maintain oxidizing conditions.

Some nitrogen oxides also are emitted from the recovery furnace and lime kilns, although amounts are relatively small. Indications are that nitrogen oxide emissions are on the order of 0.5 to 1.0 kilograms per air-dried megagram (kg/Mg) (1 to 2 pounds per air-dried ton [lb/ton]) of pulp produced from the lime kiln and recovery furnace, respectively.[5-6]

A major source of emissions in a kraft mill is the boiler for generating auxiliary steam and power. The fuels are coal, oil, natural gas, or bark/wood waste. See Chapter 1, "External Combustion Sources", for emission factors for boilers.

Table 10.2-1 presents emission factors for a conventional kraft mill. The most widely used particulate control devices are shown, along with the odor reductions through black liquor oxidation and incineration of noncondensable offgases. Tables 10.2-2, 10.2-3, 10.2-4, 10.2-5, 10.2-6, and 10.2-7 present cumulative size distribution data and size-specific emission factors for particulate emissions from sources within a conventional kraft mill. Uncontrolled and controlled size-specific emission factors[7] are presented in Figure 10.2-2, Figure 10.2-3, Figure 10.2-4, Figure 10.2-5, Figure 10.2-6, and Figure 10.2-7. The particle sizes are expressed in terms of the aerodynamic diameter in micrometers (μm).

10.2.3 Acid Sulfite Pulping

10.2.3.1 Process Description -

The production of acid sulfite pulp proceeds similarly to kraft pulping, except that different chemicals are used in the cooking liquor. In place of the caustic solution used to dissolve the lignin in the wood, sulfurous acid is employed. To buffer the cooking solution, a bisulfite of sodium, magnesium, calcium, or ammonium is used. A diagram of a typical magnesium-base process is shown in Figure 10.2-8.

Digestion is carried out under high pressure and high temperature, in either batch mode or continuous digesters, and in the presence of a sulfurous acid/bisulfite cooking liquid. When cooking is completed, either the digester is discharged at high pressure into a blow pit, or its contents are pumped into a dump tank at lower pressure. The spent sulfite liquor (also called red liquor) then drains through the bottom of the tank and is treated and discarded, incinerated, or sent to a plant for recovery of heat and chemicals. The pulp is then washed and processed through screens and centrifuges to remove knots, bundles of fibers, and other material. It subsequently may be bleached, pressed, and dried in papermaking operations.

Because of the variety of cooking liquor bases used, numerous schemes have evolved for heat and/or chemical recovery. In calcium base systems, found mostly in older mills, chemical recovery is not practical, and the spent liquor is usually discharged or incinerated. In ammonium base operations, heat can be recovered by combusting the spent liquor, but the ammonium base is thereby consumed. In sodium or magnesium base operations, the heat, sulfur, and base all may be feasibly recovered.

Table 10.2-1 (Metric And English Units). EMISSION FACTORS FOR KRAFT PULPING[a]

EMISSION FACTOR RATING: A

Source	Type Of Control	Particulate		Sulfur Dioxide (SO_2)		Carbon Monoxide (CO)		Hydrogen Sulfide (S^m)		RSH, RSR, RSSR (S^m)	
		kg/Mg	lb/ton	kg/Mg	lb/ton	kg/Mg	lb/ton	kg/Mg	lb/ton	kg/Mg	lb/ton
Digester relief and blow tank	Untreated[b]	ND	ND	ND	ND	ND	ND	0.02	0.03	0.6	1.2
Brown stock washer	Untreated[b]	ND	ND	ND	ND	ND	ND	0.01	0.02	0.2[c]	0.4[c]
Multiple effect evaporator	Untreated[b]	ND	ND	ND	ND	ND	ND	0.55	1.1	0.05	0.1
Recovery boiler and direct evaporator	Untreated[d]	90	180	3.5	7	5.5	11	6[e]	12[e]	1.5[e]	3[e]
	Venturi scrubber[f]	24	48	3.5	7	5.5	11	6[e]	12[e]	1.5[e]	3[e]
	ESP	1	2	3.5	7	5.5	11	6[e]	12[e]	1.5[e]	3[e]
	Auxiliary scrubber	1.5 - 7.5[g]	3 - 15[g]					6[e]	12[e]	1.5[e]	3[e]
Noncontact recovery boiler without direct contact evaporator	Untreated	115	230	ND	ND	5.5	11	0.05[h]	0.1[h]	ND	ND
	ESP	1	2	ND	ND	5.5	11	0.05[h]	0.1[h]	ND	ND
Smelt dissolving tank	Untreated	3.5	7	0.1	0.2	ND	ND	0.1[j]	0.2[j]	0.15[j]	0.3[j]
	Mesh pad	0.5	1	0.1	0.2	ND	ND	0.1[j]	0.2[j]	0.15[j]	0.3[j]
	Scrubber	0.1	0.2	ND	ND	ND	ND	0.1[j]	0.2[j]	0.15[j]	0.3[j]
Lime kiln	Untreated	28	56	0.15	0.3	0.05	0.1	0.25[m]	0.5[m]	0.1[m]	0.2[m]
	Scrubber or ESP	0.25	0.5	ND	ND	0.05	0.1	0.25[m]	0.5[m]	0.1[m]	0.2[m]
Turpentine condenser	Untreated	ND	ND	ND	ND	ND	ND	0.005	0.01	0.25	0.5
Miscellaneous[n]	Untreated	ND	ND	ND	ND	ND	ND	ND	ND	0.25	0.5

Table 10.2-1 (cont.).

[a] References 8-10. Factors expressed in unit weight of air-dried unbleached pulp (ADP). RSH = Methyl mercaptan. RSR = Dimethyl sulfide. RSSR = Dimethyl disulfide. ESP = Electrostatic precipitator. ND = No data.

[b] If noncondensable gases from these sources are vented to lime kiln, recovery furnace, or equivalent, the reduced sulfur compounds are destroyed.

[c] Apply with system using condensate as washing medium. When using fresh water, emissions are 0.05 kg/Mg (0.1 lb/ton).

[d] Apply when cyclonic scrubber or cascade evaporator is used for direct contact evaporation, with no further controls.

[e] Usually reduced by 50% with black liquor oxidation and can be cut 95 - 99% when oxidation is complete and recovery furnace is operated optimally.

[f] Apply when venturi scrubber is used for direct contact evaporation, with no further controls.

[g] Use 7.5 kg/Mg (15 lb/ton) when auxiliary scrubber follows venturi scrubber, and 1.5 kg/Mg (3 lb/ton) when it follows ESP.

[h] Apply when recovery furnace is operated optimally to control total reduced sulfur (TRS) compounds.

[j] Usually reduced to 0.01 g/kg (0.02 lb/ton) ADP when water low in sulfides is used in smelt dissolving tank and associated scrubber.

[m] Usually reduced to 0.015 g/kg (0.03 lb/ton) ADP with efficient mud washing, optimal kiln operation and added caustic in scrubbing water. With only efficient mud washing and optimal process control, TRS compounds reduced to 0.04 g/kg (0.08 lb/ton) ADP.

[n] Includes knotter vents, brownstock seal tanks, etc. When black liquor oxidation is included, emissions are 0.3 kg/Mg (0.6 lb/ton).

Table 10.2-2 (Metric Units). CUMULATIVE PARTICLE SIZE DISTRIBUTION AND SIZE-SPECIFIC EMISSION FACTORS FOR A RECOVERY BOILER WITH A DIRECT-CONTACT EVAPORATOR AND AN ESP[a]

EMISSION FACTOR RATING: C

Particulate Size (μm)	Cumulative Mass % ≤ Stated Size		Cumulative Emission Factor (kg/Mg of Air-Dried Pulp)	
	Uncontrolled	Controlled	Uncontrolled	Controlled
15	95.0	ND	86	ND
10	93.5	ND	84	ND
6	92.2	68.2	83	0.7
2.5	83.5	53.8	75	0.5
1.25	56.5	40.5	51	0.4
1.00	45.3	34.2	41	0.3
0.625	26.5	22.2	24	0.2
Total	100	100	90	1.0

[a]Reference 7. ND = no data.

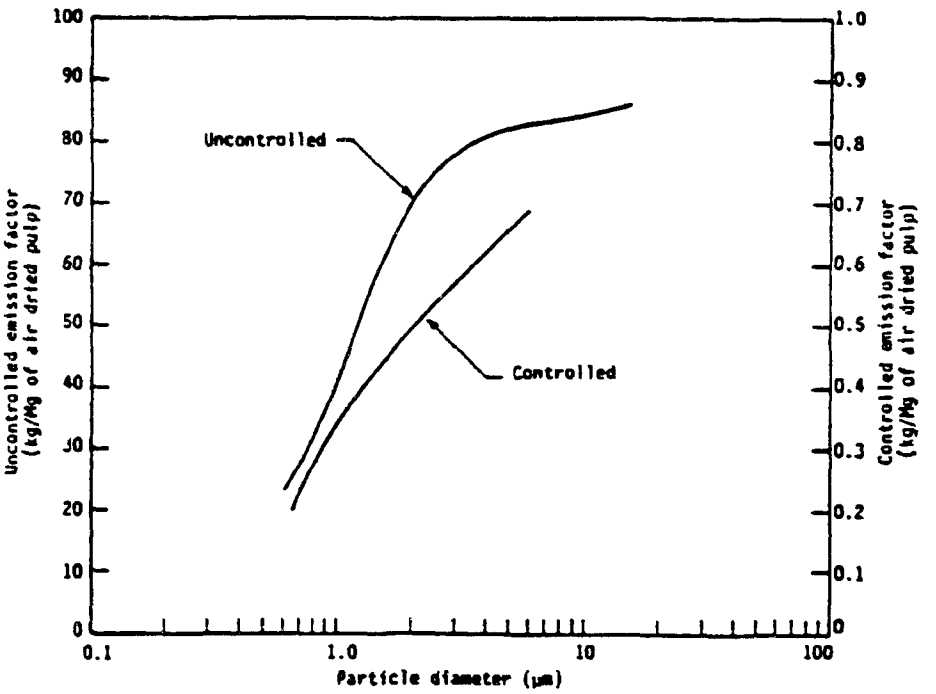

Figure 10.2-2. Cumulative particle size distribution and size-specific emission factors for recovery boiler with direct-contact evaporator and ESP.

Table 10.2-3 (Metric Units). CUMULATIVE PARTICLE SIZE DISTRIBUTION AND SIZE-SPECIFIC EMISSION FACTORS FOR A RECOVERY BOILER WITHOUT A DIRECT-CONTACT EVAPORATOR BUT WITH AN ESP[a]

EMISSION FACTOR RATING: C

Particulate Size (μm)	Cumulative Mass % ≤ Stated Size		Cumulative Emission Factor (kg/Mg of Air-Dried Pulp)	
	Uncontrolled	Controlled	Uncontrolled	Controlled
15	ND	78.8	ND	0.8
10	ND	74.8	ND	0.7
6	ND	71.9	ND	0.7
2.5	78.0	67.3	90	0.6
1.25	40.0	51.3	46	0.5
1.00	30.0	42.4	35	0.5
0.625	17.0	29.6	20	0.3
Total	100	100	115	1.0

[a]Reference 7. ND = no data.

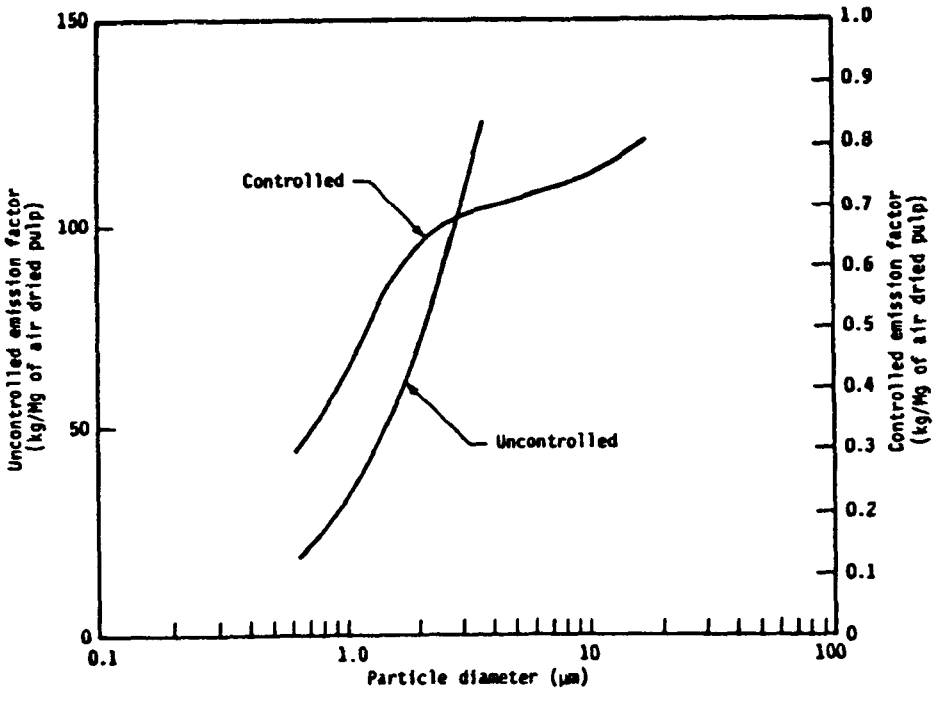

Figure 10.2-3. Cumulative particle size distribution and size-specific emission factors for recovery boiler without direct-contact evaporator but with ESP.

Table 10.2-4 (Metric Units). CUMULATIVE PARTICLE SIZE DISTRIBUTION AND SIZE-SPECIFIC EMISSION FACTORS FOR A LIME KILN WITH A VENTURI SCRUBBER[a]

EMISSION FACTOR RATING: C

Particulate Size (μm)	Cumulative Mass % ≤ Stated Size		Cumulative Emission Factor (kg/Mg of Air-Dried Pulp)	
	Uncontrolled	Controlled	Uncontrolled	Controlled
15	27.7	98.9	7.8	0.24
10	16.8	98.3	4.7	0.24
6	13.4	98.2	3.8	0.24
2.5	10.5	96.0	2.9	0.24
1.25	8.2	85.0	2.3	0.21
1.00	7.1	78.9	2.0	0.20
0.625	3.9	54.3	1.1	0.14
Total	100	100	28.0	0.25

[a]Reference 7.

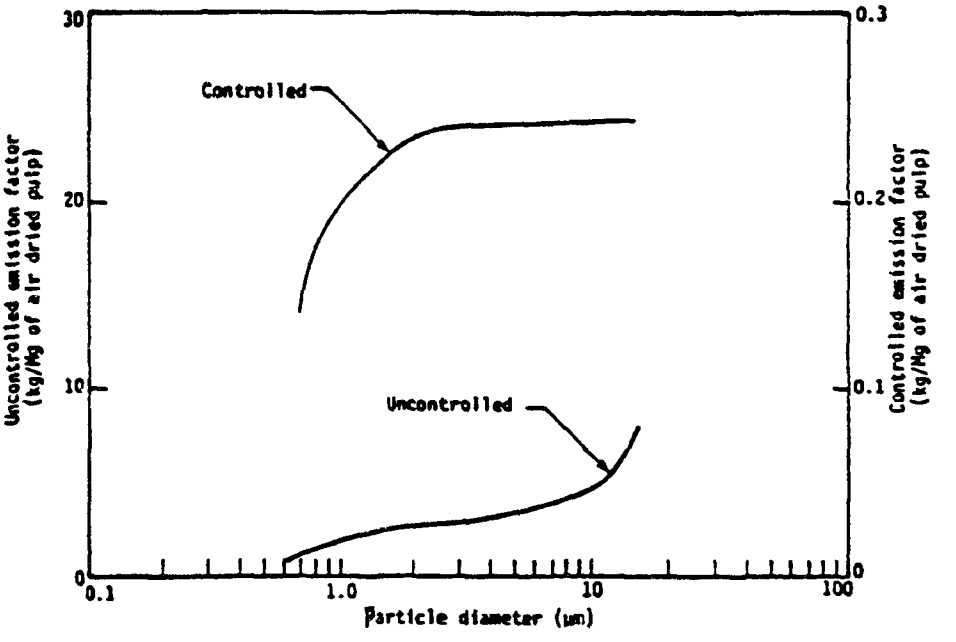

Figure 10.2-4. Cumulative particle size distribution and size-specific emission factors for lime kiln with venturi scrubber.

Table 10.2-5 (Metric Units). CUMULATIVE PARTICLE SIZE DISTRIBUTION AND SIZE-SPECIFIC EMISSION FACTORS FOR A LIME KILN WITH AN ESP[a]

EMISSION FACTOR RATING: C

Particulate Size (μm)	Cumulative Mass % ≤ Stated Size		Cumulative Emission Factor (kg/Mg of Air-Dried Pulp)	
	Uncontrolled	Controlled	Uncontrolled	Controlled
15	27.7	91.2	7.8	0.23
10	16.8	88.5	4.7	0.22
6	13.4	86.5	3.8	0.22
2.5	10.5	83.0	2.9	0.21
1.25	8.2	70.2	2.3	0.18
1.00	7.1	62.9	2.0	0.16
0.625	3.9	46.9	1.1	0.12
Total	100	100	28.0	0.25

[a]Reference 7.

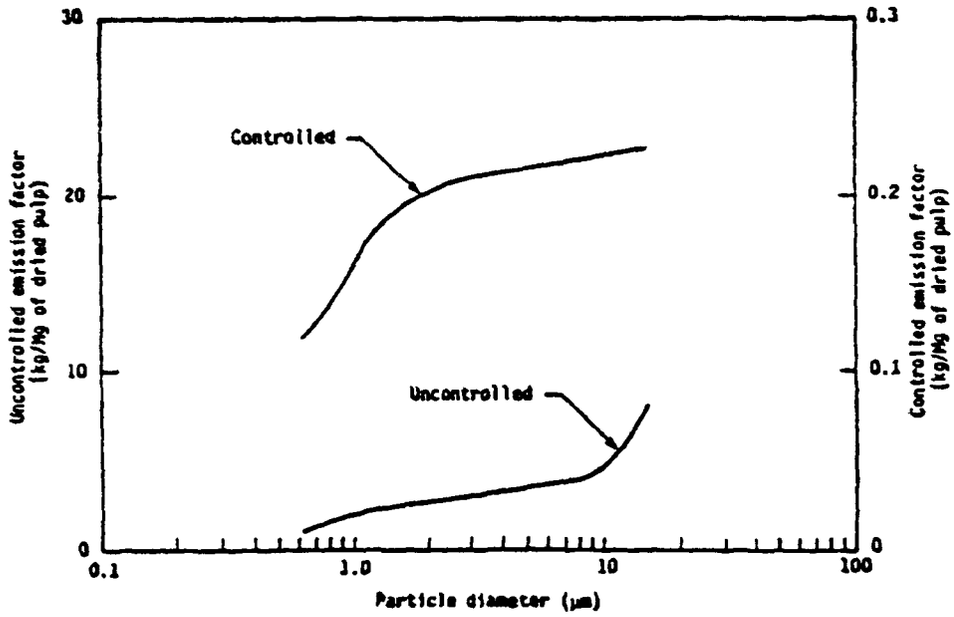

Figure 10.2-5. Cumulative particle size distribution and size-specific emission factors for lime kiln with ESP.

Table 10.2-6 (Metric Units). CUMULATIVE PARTICLE SIZE DISTRIBUTION AND SIZE-SPECIFIC EMISSION FACTORS FOR A SMELT DISSOLVING TANK WITH A PACKED TOWER[a]

EMISSION FACTOR RATING: C

Particulate Size (μm)	Cumulative Mass % ≤ Stated Size		Cumulative Emission Factor (kg/Mg of Air-Dried Pulp)	
	Uncontrolled	Controlled	Uncontrolled	Controlled
15	90.0	95.3	3.2	0.48
10	88.5	95.3	3.1	0.48
6	87.0	94.3	3.0	0.47
2.5	73.0	85.2	2.6	0.43
1.25	47.5	63.8	1.7	0.32
1.00	40.0	54.2	1.4	0.27
0.625	25.5	34.2	0.9	0.17
Total	100	100	3.5	0.50

[a]Reference 7.

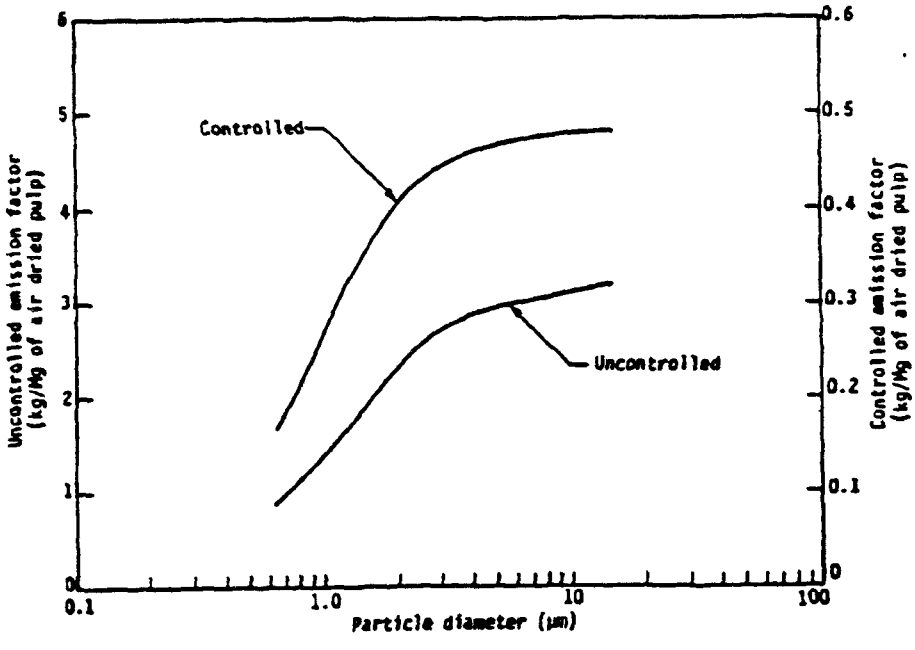

Figure 10.2-6. Cumulative particle size distribution and size-specific emission factors for smelt dissolving tank with packed tower.

Table 10.2-7 (Metric Units). CUMULATIVE PARTICLE SIZE DISTRIBUTION AND SIZE-SPECIFIC EMISSION FACTORS FOR A SMELT DISSOLVING TANK WITH A VENTURI SCRUBBER[a]

EMISSION FACTOR RATING: C

Particulate Size (μm)	Cumulative Mass % ≤ Stated Size		Cumulative Emission Factor (kg/Mg of Air-Dried Pulp)	
	Uncontrolled	Controlled	Uncontrolled	Controlled
15	90.0	89.9	3.2	0.09
10	88.5	89.5	3.1	0.09
6	87.0	88.4	3.0	0.09
2.5	73.0	81.3	2.6	0.08
1.25	47.5	63.5	1.7	0.06
1.00	40.0	54.7	1.4	0.06
0.625	25.5	38.7	0.9	0.04
Total	100	100	3.5	0.09

[a]Reference 7.

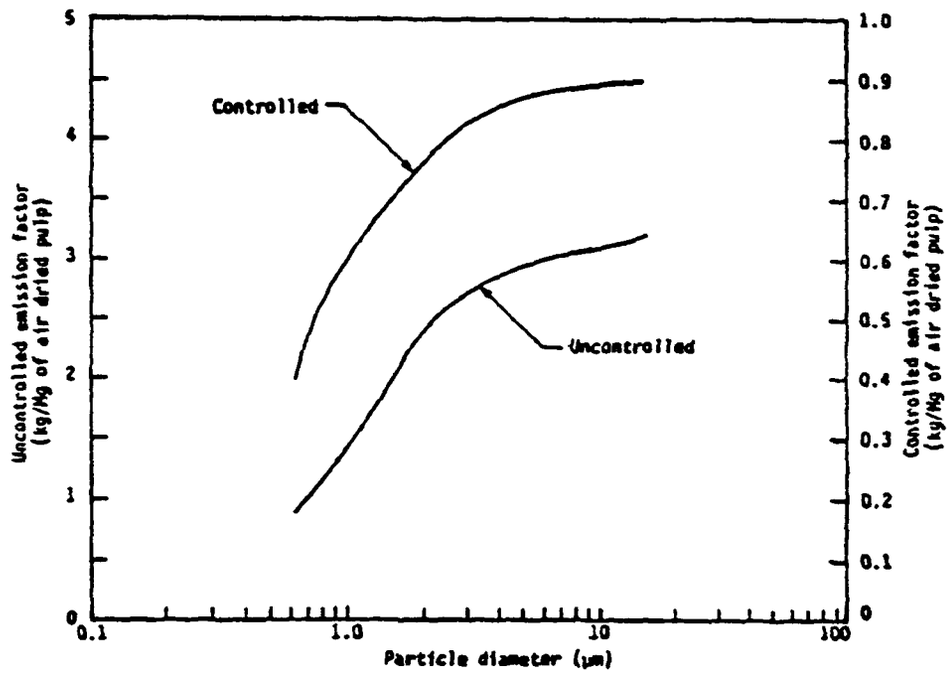

Figure 10.2-7. Cumulative particle size distribution and size-specific emission factors for smelt dissolving tank with venturi scrubber.

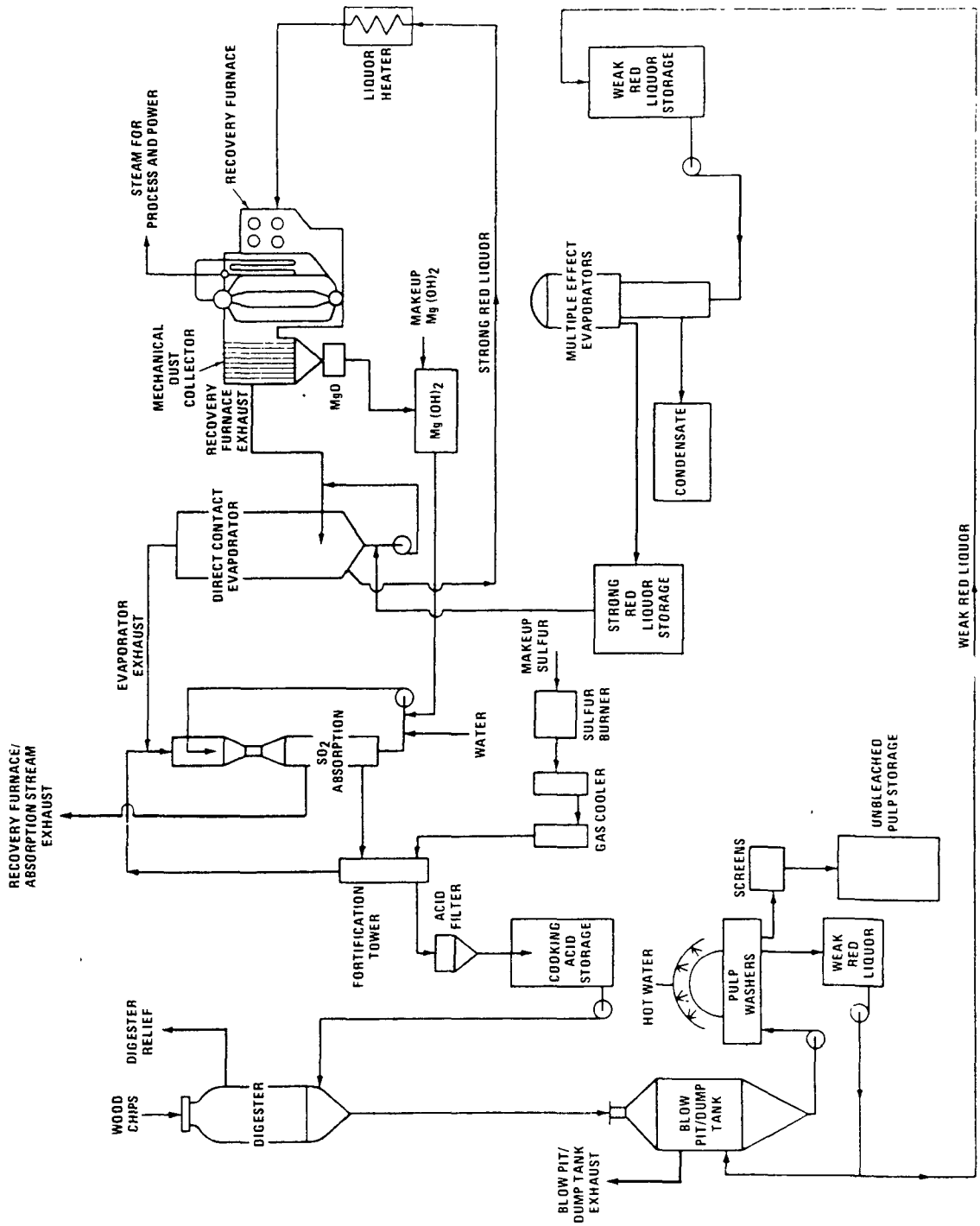

Figure 10.2-8. Simplified process flow diagram of magnesium-base process employing chemical and heat recovery.

If recovery is practiced, the spent (weak) red liquor (which contains more than half of the raw materials as dissolved organic solids) is concentrated in a multiple-effect evaporator and a direct-contact evaporator to 55 to 60 percent solids. This strong liquor is sprayed into a furnace and burned, producing steam to operate the digesters, evaporators, etc. and to meet other power requirements.

When magnesium base liquor is burned, a flue gas is produced from which magnesium oxide is recovered in a multiple cyclone as fine white power. The magnesium oxide is then water slaked and is used as circulating liquor in a series of venturi scrubbers, which are designed to absorb sulfur dioxide from the flue gas and to form a bisulfite solution for use in the cook cycle. When sodium base liquor is burned, the inorganic compounds are recovered as a molten smelt containing sodium sulfide and sodium carbonate. This smelt may be processed further and used to absorb sulfur dioxide from the flue gas and sulfur burner. In some sodium base mills, however, the smelt may be sold to a nearby kraft mill as raw material for producing green liquor.

If liquor recovery is not practiced, an acid plant is necessary of sufficient capacity to fulfill the mill's total sulfite requirement. Normally, sulfur is burned in a rotary or spray burner. The gas produced is then cooled by heat exchangers and a water spray and is then absorbed in a variety of different scrubbers containing either limestone or a solution of the base chemical. Where recovery is practiced, fortification is accomplished similarly, although a much smaller amount of sulfur dioxide must be produced to make up for that lost in the process.

10.2.3.2 Emissions And Controls[11] -

Sulfur dioxide (SO_2) is generally considered the major pollutant of concern from sulfite pulp mills. The characteristic "kraft" odor is not emitted because volatile reduced sulfur compounds are not products of the lignin/bisulfite reaction.

A major SO_2 source is the digester and blow pit (dump tank) system. Sulfur dioxide is present in the intermittent digester relief gases, as well as in the gases given off at the end of the cook when the digester contents are discharged into the blow pit. The quantity of sulfur dioxide evolved and emitted to the atmosphere in these gas streams depends on the pH of the cooking liquor, the pressure at which the digester contents are discharged, and the effectiveness of the absorption systems employed for SO_2 recovery. Scrubbers can be installed that reduce SO_2 from this source by as much as 99 percent.

Another source of sulfur dioxide emissions is the recovery system. Since magnesium, sodium, and ammonium base recovery systems all use absorption systems to recover SO_2 generated in recovery furnaces, acid fortification towers, multiple effect evaporators, etc., the magnitude of SO_2 emissions depends on the desired efficiency of these systems. Generally, such absorption systems recover better than 95 percent of the sulfur so it can be reused.

The various pulp washing, screening, and cleaning operations are also potential sources of SO_2. These operations are numerous and may account for a significant fraction of a mill's SO_2 emissions if not controlled.

The only significant particulate source in the pulping and recovery process is the absorption system handling the recovery furnace exhaust. Ammonium base systems generate less particulate than do magnesium or sodium base systems. The combustion productions are mostly nitrogen, water vapor, and sulfur dioxide.

Auxiliary power boilers also produce emissions in the sulfite pulp mill, and emission factors for these boilers are presented in Chapter 1, "External Combustion Sources". Table 10.2-8 contains emission factors for the various sulfite pulping operations.

10.2.4 Neutral Sulfite Semichemical (NSSC) Pulping

10.2.4.1 Process Description[9,12-14] -

In this method, wood chips are cooked in a neutral solution of sodium sulfite and sodium carbonate. Sulfite ions react with the lignin in wood, and the sodium bicarbonate acts as a buffer to maintain a neutral solution. The major difference between all semichemical techniques and those of kraft and acid sulfite processes is that only a portion of the lignin is removed during the cook, after which the pulp is further reduced by mechanical disintegration. This method achieves yields as high as 60 to 80 percent, as opposed to 50 to 55 percent for other chemical processes.

The NSSC process varies from mill to mill. Some mills dispose of their spent liquor, some mills recover the cooking chemicals, and some, when operated in conjunction with kraft mills, mix their spent liquor with the kraft liquor as a source of makeup chemicals. When recovery is practiced, the involved steps parallel those of the sulfite process.

10.2.4.2 Emissions And Controls[9,12-14] -

Particulate emissions are a potential problem only when recovery systems are involved. Mills that do practice recovery but are not operated in conjunction with kraft operations often utilize fluidized bed reactors to burn their spent liquor. Because the flue gas contains sodium sulfate and sodium carbonate dust, efficient particulate collection may be included for chemical recovery.

A potential gaseous pollutant is sulfur dioxide. Absorbing towers, digester/blower tank systems, and recovery furnaces are the main sources of SO_2, with amounts emitted dependent upon the capability of the scrubbing devices installed for control and recovery.

Hydrogen sulfide can also be emitted from NSSC mills which use kraft type recovery furnaces. The main potential source is the absorbing tower, where a significant quantity of hydrogen sulfite is liberated as the cooking liquor is made. Other possible sources, depending on the operating conditions, include the recovery furnace, and in mills where some green liquor is used in the cooking process, the digester/blow tank system. Where green liquor is used, it is also possible that significant quantities of mercaptans will be produced. Hydrogen sulfide emissions can be eliminated if burned to sulfur dioxide before the absorbing system.

Because the NSSC process differs greatly from mill to mill, and because of the scarcity of adequate data, no emission factors are presented for this process.

Table 10.2-8. (Metric And English Units). EMISSION FACTORS FOR SULFITE PULPING

Source	Base	Control	Emission Factor[b]				EMISSION FACTOR RATING
			Particulate		Sulfur Dioxide		
			kg/ADUMg	lb/ADUT	kg/ADUMg	lb/ADUT	
Digester/blow pit or dump tank[c]	All	None	Neg	Neg	5 to 35	10 to 70	C
	MgO	Process change[d]	Neg	Neg	1 to 3	2 to 6	C
	MgO	Scrubber	Neg	Neg	0.5	1	B
	MgO	Process change and scrubber	Neg	Neg	0.1	0.2	B
	MgO	All exhaust vented through recovery system	Neg	Neg	0	0	A
	NH_3	Process change	Neg	Neg	12.5	25	D
	NH_3	Process change and scrubber	Neg	Neg	0.2	0.4	B
	Na	Process change and scrubber	Neg	Neg	1	2	C
	Ca	Unknown	Neg	Neg	33.5	67	C
Recovery system[e]	MgO	Multicyclone and venturi scrubbers	1	2	4.5	9	A
	NH_3	Ammonia absorption and mist eliminator	0.35	0.7	3.5	7	B
	Na	Sodium carbonate scrubber	2	4	1	2	C
Acid plant[f]	NH_3	Scrubber	Neg	Neg	0.2	0.3	C
	Na	Unknown[g]	Neg	Neg	0.1	0.2	D
	Ca	Jensen scrubber	Neg	Neg	4	8	C
Other[h]	All	None	Neg	Neg	6	12	D

[a] Reference 11. All factors represent long term average emissions. ADUMg = Air-dried unbleached megagram. ADUT = Air-dried unbleached ton. Neg = negligible.

[b] Expressed as kg (lb) of pollutant/air dried unbleached Mg (ton) of pulp.

Table 10.2-8 (cont.).

[c] Factors represent emissions after cook is completed and when digester contents are discharged into blow pit or dump tank. Some relief gases are vented from digester during cook cycle, but these are usually transferred to pressure accumulators and SO_2 herein reabsorbed for use in cooking liquor. In some mills, actual emissions will be intermittent and for short periods.

[d] May include such measures as raising cooking liquor pH (thereby lowering free SO_2), relieving digester pressure before contents discharge, and pumping out digester contents instead of blowing out.

[e] Recovery system at most mills is closed and includes recovery furnace, direct contact evaporator, multiple effect evaporator, acid fortification tower, and SO_2 absorption scrubbers. Generally only one emission point for entire system. Factors include high SO_2 emissions during periodic purging of recovery systems.

[f] Necessary in mills with insufficient or nonexistent recovery systems.

[g] Control is practiced, but type of system is unknown.

[h] Includes miscellaneous pulping operations such as knotters, washers, screens, etc.

References For Section 10.2

1. *Review Of New Source Performance Standards For Kraft Pulp Mills*, EPA-450/3-83-017, U. S. Environmental Protection Agency, Research Triangle Park, NC, September 1983.

2. *Standards Support And Environmental Impact Statement, Volume I: Proposed Standards Of Performance For Kraft Pulp Mills*, EPA-450/2-76-014a, U. S. Environmental Protection Agency, Research Triangle Park, NC, September 1976.

3. *Kraft Pulping - Control Of TRS Emissions From Existing Mills*, EPA-450/78-003b, U. S. Environmental Protection Agency, Research Triangle Park, NC, March 1979.

4. *Environmental Pollution Control, Pulp And Paper Industry, Part I: Air*, EPA-625/7-76-001, U. S. Environmental Protection Agency, Washington, DC, October 1976.

5. *A Study Of Nitrogen Oxides Emissions From Lime Kilns*, Technical Bulletin Number 107, National Council of the Paper Industry for Air and Stream Improvement, New York, NY, April 1980.

6. *A Study Of Nitrogen Oxides Emissions From Large Kraft Recovery Furnaces*, Technical Bulletin Number 111, National Council of the Paper Industry for Air and Stream Improvement, New York, NY, January 1981.

7. *Source Category Report For The Kraft Pulp Industry*, EPA Contract Number 68-02-3156, Acurex Corporation, Mountain View, CA, January 1983.

8. Source test data, Office Of Air Quality Planning And Standards, U. S. Environmental Protection Agency, Research Triangle Park, NC, 1972.

9. *Atmospheric Emissions From The Pulp And Paper Manufacturing Industry*, EPA-450/1-73-002, U. S. Environmental Protection Agency, Research Triangle Park, NC, September 1973.

10. *Carbon Monoxide Emissions From Selected Combustion Sources Based On Short-Term Monitoring Records*, Technical Bulletin Number 416, National Council of the Paper Industry for Air and Stream Improvement, New York, NY, January 1984.

11. *Background Document: Acid Sulfite Pulping*, EPA-450/3-77-005, U. S. Environmental Protection Agency, Research Triangle Park, NC, January 1977.

12. E. R. Hendrickson, *et al.*, *Control Of Atmospheric Emissions In The Wood Pulping Industry, Volume I*, HEW Contract Number CPA-22-69-18, U. S. Environmental Protection Agency, Washington, DC, March 15, 1970.

13. M. Benjamin, *et al.*, *"A General Description of Commercial Wood Pulping And Bleaching Processes"*, Journal Of The Air Pollution Control Association, *19*(3):155-161, March 1969.

14. S. F. Caleano and B. M. Dillard, *"Process Modifications For Air Pollution Control In Neutral Sulfite Semi-chemical Mills"*, Journal Of The Air Pollution Control Association, 22(3):195-199, March 1972.

10.3 Pulp Bleaching

[Work In Progress]

10.4 Papermaking

[Work In Progress]

10.5 Plywood Manufacturing

10.5.1 General

Plywood is a building material consisting of veneers (thin wood layers or plies) bonded with an adhesive. The outer layers (face and back) surround a core that is usually lumber, veneer, or particleboard. Plywood has many uses, including wall siding, sheathing, roof decking, concrete formboards, floors, and containers.

10.5.2 Process Description[1-3,15]

The manufacture of plywood consists of seven main processes: log debarking and bucking, heating the logs, peeling the logs into veneers, drying the veneers, gluing the veneers together, pressing the veneers in a hot press, and finishing processes such as sanding and trimming. Figure 10.5-1 provides a generic process flow diagram for a plywood mill.

The initial step of debarking is accomplished by feeding logs through one of several types of debarking machines. The purpose of this operation is to remove the outer bark of the tree without substantially damaging the wood. Although the different types of machines function somewhat differently, emissions from the different machines are comparable. After the bark is removed, the logs are cut to appropriate lengths in a step known as bucking.

The logs (now referred to as blocks) then are heated to improve the cutting action of the veneer lathe or slicer, thereby generating a product from the lathe or slicer with better surface finish. Blocks are heated to around 93°C (200°F) using a variety of methods--hot water baths, steam heat, hot water spray, or a combination of the three.

After heating, the logs are processed to generate veneer. For most applications, a veneer lathe is used, but some decorative, high quality veneer is generated with a veneer slicer. The slicer and veneer lathe both work on the same principle; the wood is compressed with a nosebar while the veneer knife cuts the blocks into veneers that are typically 3 mm (1/8 in.) thick. These pieces are then clipped to a useable width, typically 1.37 m (54 in.), to allow for shrinkage and trim.

Veneers are taken from the clipper to a veneer dryer where they are dried to moisture contents that range from less than 1 to 15 percent. Target moisture contents depend on the type of resin used in subsequent gluing steps. The typical drying temperature ranges from 150° to 200°C (300° to 400°F). The veneer dryer may be a longitudinal dryer, which circulates air parallel to the veneer, or a jet dryer. The jet dryers direct hot, high velocity air at the surface of the veneers in order to create a more turbulent flow of air. The increased turbulence provides more effective use of dryer energy, thereby reducing drying time. In direct-heated wood-fired dryers, the combustion gases are blended with recirculated exhaust from the dryer to reduce the combustion gas temperature. In such cases, the gases entering the dryer generally are maintained in the range of 316° to 427°C (600° to 800°F).

When the veneers have been dried to their specified moisture content, they are glued together with a thermosetting resin. The two main types of resins are phenol-formaldehyde, which is used for softwood and exterior grades of hardwood, and urea-formaldehyde, which is used to glue interior grades of hardwood. The resins are applied by glue spreaders, curtain coaters, or spray systems. Spreaders have a

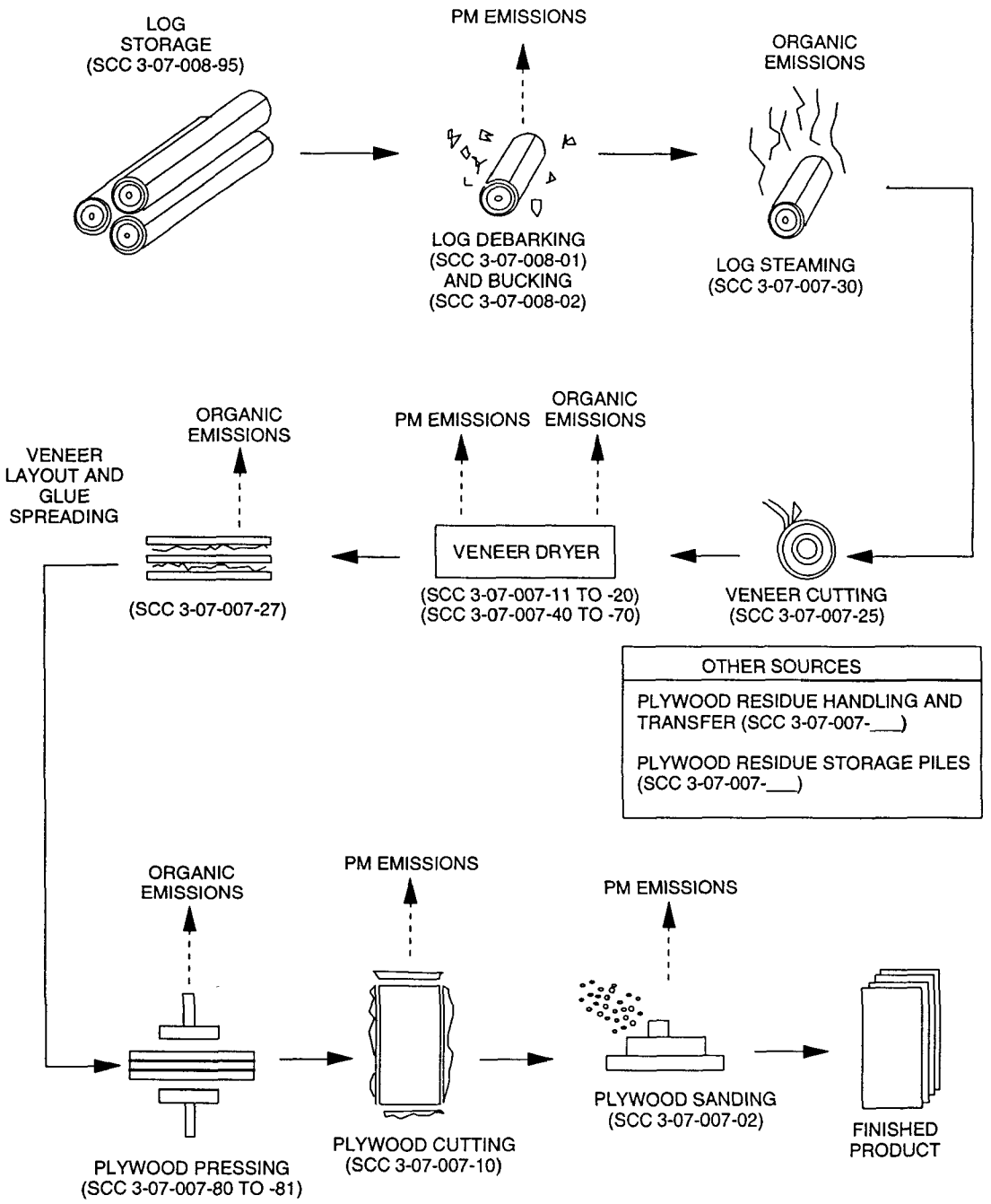

Figure 10.5-1. Generic process flow diagram for a plywood mill.
(SCC = Source Classification Code.)

series of rubber-covered grooved application rolls that apply the resin to the sheet of veneer. Generally, resin is spread on two sides of one ply of veneer, which is then placed between two plies of veneer that are not coated with resin.

Assembly of the plywood panels must be symmetrical on either side of a neutral center in order to avoid excessive warpage. For example, a five-ply panel would be laid up in the following manner. A back, with the grain direction parallel to the long axis of the panel, is placed on the assembly table. The next veneer has a grain direction perpendicular to that of the back, and is spread with resin on both sides. Then, the center is placed, with no resin, and with the grain perpendicular to the previous veneer (parallel with the back). The fourth veneer has a grain perpendicular to the previous veneer (parallel with the short axis of the panel) and is spread with resin on both sides. The final, face, veneer with no resin is placed like the back with the grain parallel to the long axis of the plywood panel.

The laid-up assembly of veneers then is sent to a hot press in which it is consolidated under heat and pressure. Hot pressing has two main objectives: (1) to press the glue into a thin layer over each sheet of veneer; and (2) to activate the thermosetting resins. Typical press temperatures range from 132° to 165°C (270° to 330°F) for softwood plywood, and 107° to 135°C (225° to 275°F) for hardwood plywood. Press times range from 2 to 7 minutes. The time and temperature vary depending on the wood species used, the resin used, and the press design.

The plywood then is taken to a finishing process where edges are trimmed; the face and back may or may not be sanded smooth. The type of finishing depends on the end product desired.

10.5.3 Emissions and Controls[2-20]

The primary emissions from the manufacture of plywood include filterable particulate matter (PM) and PM less than 10 micrometers in aerodynamic diameter (PM-10) from log debarking and bucking, and plywood cutting and sanding; filterable and condensible PM/PM-10 from drying and pressing; organic compounds from steaming and drying operations; and organic compounds, including formaldehyde and other hazardous air pollutants (HAPs), from gluing and hot pressing. However, trace amounts of combustion by-products, which may include HAPs (e. g., aldehydes), may be present in direct-fired, veneer dryer exhausts as a result of fossil fuel or wood combustion gases being passed through the dryer. Fuel combustion for material drying also can generate carbon monoxide (CO), carbon dioxide (CO_2), sulfur dioxide (SO_2), and nitrogen oxide (NO_x) emissions.

The main source of emissions is the veneer dryer, which emits significant quantities of organic compounds. The quantity and type of organic compounds emitted varies depending on the wood species, the dryer type, and its method of operation. The two discernible fractions released from the dryer are condensibles and volatiles. The condensible organic compounds consist largely of sesqui-terpenes, resin acids, fatty acids, and alcohols. As these condensible compounds cool after being emitted from the stack, they often combine with water vapor to form aerosols, which can cause a blue haze. The other fraction, volatile organic compounds (VOCs), comprises terpenes along with small quantities of volatile combustion by-products where direct-fired dryers are used.

Measurement of VOC and condensible PM emission rates are highly dependent on stack gas and sampling train filter temperatures. When the sampling train filter temperature is higher than the stack gas temperature, the rate of VOC and condensible PM emissions measured will increase with increasing filter temperature, because as filter temperature increases less organic material will condense on the sampling train filter. The available data are inadequate to determine the effect on emissions of recirculating the exhaust from wood-fired veneer dryers to a combustion gas blend box.

The hot pressing operation is also a source of organic emissions. The quantity and composition of emissions from this operation are expected to vary with wood species and resin components. However, few test data are available for hot presses to characterize this variability.

Significant quantities of sawdust and other small wood particles are generated by plywood cutting and sanding operations. Sanders and trim saws typically have control devices to recover the material for use as a fuel in the dryer or boiler. However, small amounts of PM may be released from cutting and sanding. Log debarking, log bucking, and sawdust handling are additional sources of PM emissions. Finally, fugitive dust emissions are generated from open sources such as sawdust storage piles and vehicular traffic. Emissions from these operations are discussed in more detail in AP-42 Chapter 13.

Particulate matter and PM-10 emissions from log debarking, sawing, sanding, and material handling operations can be controlled through capture in an exhaust system connected to a sized cyclone and/or fabric filter collection system. These wood dust capture and collection systems are used not only to control atmospheric emissions, but also to collect the dust as a by-product fuel for a boiler or dryer.

Methods of controlling PM emissions from the veneer dryer include multiple spray chambers, a packed tower combined with a cyclonic collector, a sand filter scrubber, an ionizing wet scrubber (IWS), an electrified filter bed (EFB), and a wet electrostatic precipitator (WESP). The first three devices are older technologies that are being replaced with newer technologies that combine electrostatic processes with other scrubbing or filtration processes. Wet PM controls, such as IWS and WESP systems also may reduce VOC emissions from veneer dryers, but to a lesser extent than PM emissions are reduced by such systems.

In multiple spray chamber systems, the dryer exhaust is routed through a series of chambers in which water is used to capture pollutants. The water is then separated from the exhaust stream in a demisting zone. Multiple spray chambers are the most common control technology used on veneer dryers today. However, because they provide only limited removal of PM, PM-10, and condensible organic emissions, they are being replaced with newer, more effective techniques. The packed tower/cyclonic collector comprises a spray chamber, a cyclonic collector, and a packed tower in series. Applications of this system are also limited as newer, more efficient controls are applied. The sand filter scrubber incorporates a wet scrubbing section followed by a wet-sand filter and mist eliminator. The larger PM is removed in the scrubber, while a portion of the remaining organic material is collected in the filter bed or the mist eliminator. This scrubbing system is also becoming obsolete as newer, more efficient controls are applied.

Three newer technologies for controlling veneer dryer emissions are the IWS, the EFB, and the WESP. Because applications of these systems are relatively recent, there are limited data on their performance for veneer dryer emission control. The IWS combines electrostatic forces with packed bed scrubbing techniques to remove pollutants from the exhaust stream. The EFB uses electrostatic forces to attract pollutants to an electrically charged gravel bed. The WESP uses electrostatic forces to attract pollutants to either a charged metal plate or a charged metal tube. The collecting surfaces are continually rinsed with water to wash away the pollutants.

Little information is available on control devices for plywood pressing operations, as these operations are generally uncontrolled. However, one test report indicates that hot press emissions at one facility are captured by a large hood placed over and around the hot press and cooling station. The captured emissions are ducted to a packed-bed caustic scrubber. Formaldehyde collected in the scrubber is converted to sodium formate and discharged to the sewer.

A VOC control technology gaining popularity in the wood products industry for controlling both dryer and press exhaust gases is regenerative thermal oxidation. Thermal oxidizers destroy VOCs, CO, and

condensible organics by burning them at high temperatures. Regenerative thermal oxidizers (RTOs) are designed to preheat the inlet emission stream with heat recovered from the incineration exhaust gases. Up to 98 percent heat recovery is possible, although 95 percent is typically specified. Gases entering an RTO are heated by passing through pre-heated beds packed with a ceramic media. A gas burner brings the preheated emissions up to an incineration temperature between 788° and 871°C (1450° and 1600°F) in a combustion chamber with sufficient gas residence time to complete the combustion. Combustion gases then pass through a cooled ceramic bed where heat is extracted. By reversing the flow through the beds, the heat transferred from the combustion exhaust air preheats the gases to be treated, thereby reducing auxiliary fuel requirements. Industry experience has shown that RTOs typically achieve 95 percent reduction for VOC (except at inlet concentrations below 20 parts per million by volume as carbon [ppm-vC]), 70 to 80 percent reduction for CO, and typical NO_x increase of 10 to 20 ppm.

Biofiltration systems can be used effectively for control of a variety of pollutants including organic compounds (including formaldehyde and benzene), NO_x, CO, and PM from both dryer and press exhaust streams. Data from pilot plant studies in U. S. oriented strandboard mills indicate that biofilters can achieve VOC control efficiencies of 70 to 90 percent, formaldehyde control efficiencies of 85 to 98 percent, CO control efficiencies of 30 to 50 percent, NO_x control efficiencies of 80 to 95 percent, and resin/fatty acid control efficiencies of 83 to 99 percent.

Other potential control technologies for plywood veneer dryers and presses include exhaust gas recycle, regenerative catalytic oxidation (RCO), absorption systems (scrubbers), and adsorption systems.

Table 10.5-1 presents emission factors for veneer dryer emissions of PM, including filterable PM and condensible PM. Table 10.5-2 presents emission factors for veneer dryer emissions of SO_2, NO_x, CO, and CO_2. Table 10.5-3 presents emission factors for veneer dryer emissions of organic pollutants. Table 10.5-4 presents emission factors for plywood press emissions of PM, including filterable PM and condensible PM. Table 10.5-5 presents emission factors for plywood press emissions of formaldehyde and VOC. Table 10.5-6 presents emission factors for plywood manufacturing miscellaneous sources.

Table 10.5-1. EMISSION FACTORS FOR PLYWOOD VENEER DRYERS--PARTICULATE MATTER[a]

Source	Emission Control[c]	Filterable[b] PM	EMISSION FACTOR RATING	PM-10	EMISSION FACTOR RATING	Condensible[d]	EMISSION FACTOR RATING
Direct wood-fired							
Douglas fir (SCC-3-07-007-47)	WESP	0.26	D	ND		0.045	D
Direct natural gas-fired							
Unspecified pines[e] (SCC-3-07-007-50)	None	0.079	E	ND		0.42	E
Indirect heated							
Unspecified pines[e] (SCC-3-07-007-60)	None	0.35	D	ND		1.0	D
Douglas fir (SCC-3-07-007-67)	None	0.070[f]	D	ND		0.82[f]	D
Douglas fir (SCC-3-07-007-67)	WESP	0.040	E	ND		0.11	E
Unspecified firs[g] (SCC-3-07-007-66)	WESP	0.034	E	ND		0.065	E
Radio frequency heated							
Unspecified pines[e] (SCC-3-07-007-70)	None	0.0050	E	ND		0.0060	E

[a] Emission factor units are pounds per thousand square feet of 3/8-inch thick veneer (lb/MSF 3/8). One lb/MSF 3/8 = 0.5 kg/m^3. SCC = source classification code. Reference 19 except where noted otherwise. ND = no data available.

[b] Filterable PM is that PM collected on or prior to the filter of an EPA Method 5 (or equivalent) sampling train.

[c] Emission control device: WESP = wet electrostatic precipitator.

[d] Condensible PM is that PM collected in the impinger portion of a PM sampling train.

[e] Based on data on the drying of mixed pine species or the drying of veneers which are identified only as pines.

[f] References 11,14.

[g] Based on data on the drying of mixed fir species or the drying of veneers which are identified only as firs.

Table 10.5-2. EMISSION FACTORS FOR PLYWOOD VENEER DRYERS--SO_2, NO_x, CO, AND CO_2[a]

Source	Emission Control	SO_2	EMISSION FACTOR RATING	NO_x	EMISSION FACTOR RATING	CO	EMISSION FACTOR RATING	CO_2[c]	EMISSION FACTOR RATING
Direct wood-fired (SCC-3-07-007-40 to -46)	None	0.058	D	0.24	D	5.1	D	ND	
Direct natural gas-fired (SCC-3-07-007-50)	None	ND		0.012	E	0.57	E	ND	
Indirect heated (SCC-3-07-007-60 to -69)	None	NA		NA		NA		ND	
Radio-frequency heated (SCC-3-07-007-70)	None	ND		ND		ND		ND	

[a] Factors represent uncontrolled emissions. SCC = Source Classification Code. ND = no data available. NA = not applicable. All emission factors in units of pounds per thousand square feet of 3/8-inch thick veneer (lb/MSF 3/8). One lb/MSF 3/8 = 0.5 kg/m^3. Reference 19.

Table 10.5-3. EMISSION FACTORS FOR PLYWOOD VENEER DRYERS--ORGANICS[a]

Source	Emission Control[b]	VOC[c]	EMISSION FACTOR RATING	Formaldehyde	EMISSION FACTOR RATING
Direct wood-fired					
Unspecified pines[d] (SCC 3-07-007-40)	None	3.3[e]	E	ND	
Hemlock (SCC 3-07-007-44)	None	0.70[e,f]	E	ND	
Douglas fir (SCC 3-07-007-47)	WESP	0.50[e]	D	ND	
Unspecified firs[g] (SCC 3-07-007-46)	IWS	0.61[e,f]	E	ND	
Direct natural gas-fired					
Unspecified pines[d] (SCC 3-07-007-50)	None	2.1[e]	E	ND	
Indirect heated					
Unspecified pines[d] (SCC 3-07-007-60)	None	2.7[e,h]	D	ND	
Douglas fir (SCC 3-07-007-67)	None	1.3[e,j]	D	ND	
Poplar (SCC 3-07-007-69)	None	0.033[k,m]	E	0.0023[k]	E
Radio-frequency heated					
Unspecified pines[d] (SCC 3-07-007-70)	None	0.22[e]	E	ND	

[a] Factors represent uncontrolled emissions unless noted. SCC = Source Classification Code. ND = no data available. All emission factors in units of pounds per thousand square feet of 3/8-inch thick veneer (lb/MSF 3/8). One lb/MSF 3/8 = 0.5 kg/m^3. Reference 19 except where noted.

[b] Emission control device: WESP = wet electrostatic precipitator; IWS = ionizing wet scrubber.

[c] Volatile organic compounds as propane.

[d] Based on data on the drying of mixed pine species or on the drying of veneers which are identified only as pines.

[e] Emission factor may not account for formaldehyde, which is suspected to be present; VOC factor indicated is likely to be biased low.

[f] Reference 10.

[h] References 10,19.

[j] References 10,14.

[g] Based on data on the drying of mixed fir species or on the drying of veneers which are identified only as firs.

[k] Reference 12.

[m] Emission factor calculated as the sum of the factor for VOC and the factor for formaldehyde, based on a separate measurement.

Table 10.5-4. EMISSION FACTORS FOR PLYWOOD PRESSES--PARTICULATE MATTER[a]

Source	Filterable[b]				Condensible[c]	EMISSION FACTOR RATING
	PM	EMISSION FACTOR RATING	PM-10	EMISSION FACTOR RATING		
Plywood press						
PF resin (SCC 3-07-007-80)	0.12	D	ND		0.083	D

[a] Reference 19. Emission factors units are pounds per thousand square feet of 3/8-inch thick panel (lb/MSF 3/8). One lb/MSF 3/8 = 0.5 kg/m^3. SCC = Source Classification Code. ND = no data available. Factors represent uncontrolled emissions. PF = phenol-formaldehyde.

[b] Filterable PM is that PM collected on or prior to the filter of an EPA Method 5 (or equivalent) sampling train.

[c] Condensible PM is that PM collected in the impinger portion of a PM sampling train.

Table 10.5-5. EMISSION FACTORS FOR PLYWOOD PRESSES--FORMALDEHYDE AND VOC[a]

Source	FORMALDEHYDE	EMISSION FACTOR RATING	VOC[b]	EMISSION FACTOR RATING
Plywood press				
PF resin (SCC 3-07-007-80)	ND		0.33[c,d]	D
UF resin (SCC 3-07-007-81)	0.0042	E	0.021[e]	E
UF resin, wet scrubber (SCC 3-07-007-81)	0.0025	E	0.018[e]	E

[a] Factors represent uncontrolled emissions unless noted. SCC = Source Classification Code. Reference 12 unless otherwise noted. ND = no data available. Emission factor units are pounds per thousand square feet of 3/8-inch thick panel (lb/MSF 3/8). One lb/MSF 3/8 = 0.5 kg/m^3. PF = phenol-formaldehyde; UF = urea-formaldehyde.

[b] Volatile organic compounds on a propane basis.

[c] Reference 19.

[d] Emission factor may not account for formaldehyde, which is suspected to be present; VOC factor indicated is likely to be biased low.

[e] Emission factor calculated as the sum of the factor for VOC and the factor for formaldehyde, based on a separate measurement.

Table 10.5-6. EMISSION FACTORS FOR PLYWOOD MANUFACTURING--MISCELLANEOUS SOURCES[a]

Source	Pollutant	Emission factor	EMISSION FACTOR RATING
Log storage (SCC 3-07-008-95)	ND		
Log debarking (SCC 3-07-008-01)	ND		
Log bucking (SCC 3-07-008-02)	ND		
Log steaming (SCC 3-07-007-30)	ND		
Veneer cutting (SCC 3-07-007-25)	ND		
Veneer layout and glue spreading (SCC 3-07-007-27)	ND		
Plywood cutting (SCC 3-07-007-10)	ND		
Plywood sanding (SCC 3-07-007-02)	ND		
Plywood residue handling and transfer (SCC 3-07-007-___)	ND		
Plywood residue storage piles (SCC 3-07-007-___)	ND		

[a] SCC = Source Classification Code; ND = no data available.

References For Section 10.5

1. C. B. Hemming, Plywood, *Kirk-Othmer Encyclopedia Of Chemical Technology*, Second Edition, Volume 15, John Wiley & Sons, Inc., New York, NY, 1968, pp. 896-907.

2. F. L. Monroe, *et al.*, *Investigation Of Emissions From Plywood Veneer Dryers*, Washington State University, Pullman, WA, February 1972.

3. T. Baumeister, ed., Plywood, *Standard Handbook For Mechanical Engineers*, Seventh Edition, McGraw-Hill, New York, NY, 1967, pp. 6-162 through 6-169.

4. A. Mick, and D. McCargar, *Air Pollution Problems In Plywood, Particleboard, And Hardboard Mills In The Mid-Willamette Valley*, Mid-Willamette Valley Air Pollution Authority, Salem, OR, March 24, 1969.

5. *Controlled And Uncontrolled Emission Rates And Applicable Limitations For Eighty Processes*, Second Printing, EPA-340/1-78-004, U. S. Environmental Protection Agency, Research Triangle Park, NC, April 1978, pp. X-1 - X-6.

6. J. A. Danielson, ed., *Air Pollution Engineering Manual*, AP-40, Second Edition, U. S. Environmental Protection Agency, Research Triangle Park, NC, May 1973, pp. 372-374.

7. *Assessment Of Fugitive Particulate Emission Factors For Industrial Processes*, EPA-450/3-78-107, U. S. Environmental Protection Agency, Research Triangle Park, NC, September 1978.

8. C. T. Van Decar, Plywood Veneer Dryer Control Device, *Journal Of The Air Pollution Control Association*, 22:968, December 1972.

9. *Alternative Control Technology Document--PM-10 Emissions From The Wood Products Industry: Plywood Manufacturing, Draft*, U. S. Environmental Protection Agency, Research Triangle Park, NC, September 1992.

10. *A Study Of Organic Compound Emissions From Veneer Dryers And Means For Their Control*, Technical Bulletin No. 405, National Council of the Paper Industry for Air and Stream Improvement, New York, August 1983.

11. *Emission Test Report--Georgia-Pacific Springfield Plant, Springfield, Oregon*, EMB Report 81-PLY-4, U. S. Environmental Protection Agency, Research Triangle Park, NC, June 1981.

12. *Source Test Report--Woodtech, Inc., Bluefield, Virginia*, prepared for Woodtech, Inc., by Environmental Quality Management, Inc., and Pacific Environmental Services, January 1992.

13. Emission Factor Documentation For AP-42 Section 10.5, U. S. Environmental Protection Agency, Research Triangle Park, NC, July 1997.

14. *Emission Test Report--Champion International Lebanon Plant, Lebanon, Oregon*, EMB Report 81-PLY-2, U. S. Environmental Protection Agency, Research Triangle Park, NC, May 1982.

15. Written communication from John Pinkerton, National Council of the Paper Industry for Air and Stream Improvement, Inc., to Dallas Safriet, U. S. Environmental Protection Agency, Research Triangle Park, NC, April 13, 1993.

16. Written communication from John Pinkerton, National Council of the Paper Industry for Air and Stream Improvement, Inc., to Dallas Safriet, U. S. Environmental Protection Agency, Research Triangle Park, NC, June 8, 1993.

17. Written communication and attachments from T. A. Crabtree, Smith Engineering Company, Broomall, PA, to P. E. Lassiter, U. S. Environmental Protection Agency, Research Triangle Park, NC, July 26, 1996.

18. Technical Memorandum, Minutes of the October 12-13, 1993 BACT Technologies Workshop, Raleigh, NC, sponsored by the American Forest and Paper Association, K. D. Bullock, Midwest Research Institute, Cary, NC, October 1993.

19. *Oriented Strandboard And Plywood Air Emission Databases, Technical Bulletin No. 694* , the National Council of the Paper Industry for Air and Stream Improvement, New York, NY, April 1995.

20. A. E. Cavadeas, *RTO Experience In The Wood Products Industry*, Presented at Environmental Challenges: What's New in the Wood Products Industry?, workshop sponsored by the American Forest and Paper Association, Research Triangle Park, NC, February 4-5, 1997.

APPENDIX A

EMISSION FACTOR CALCULATION SPREADSHEETS

This appendix presents printouts of the detailed spreadsheets that were constructed in order to calculate emission factors for plywood veneer dryers and presses. Table A-1 presents the calculations for plywood veneer dryers. Table A-2 presents the calculations for plywood presses. Table A-3 presents a summary of Method 25 and Method 25A VOC data and available formaldehyde data for plywood veneer dryers and presses.

As discussed in Section 4.3.1 of this report, the data available for some of the specific emission factors developed included the results of multiple tests on the same emission source. In such cases, the test-specific emission factors for the same source were averaged first, and that average emission factor then was averaged with the factors for the other sources to yield the candidate emission factors for AP-42. In Table A-1, the emission factor column is divided into two subcolumns, "Test," and "Dryer". The emission factor column labeled "Test" includes the available test-specific emission factors. The emission factor column labeled "Dryer" includes averages of test-specific emission factors for the same dryer. For dryers where only one test-specific emission factor was available, that emission factor appears in both the "Test" and "Dryer" columns. The AP-42 candidate emission factors were developed by averaging the dryer average emission factors in the "Dryer" column. A parallel structure applies to Table A-2 for plywood presses.

10.6 Reconstituted Wood Products

10.6.1 Waferboard And Oriented Strand Board

10.6.2 Particleboard

10.6.3 Medium Density Fiberboard

10.6.1 Waferboard And Oriented Strand Board

[Work In Progress]

10.6.2 Particleboard

[Work In Progress]

10.6.3 Medium Density Fiberboard

[Work In Progess]

10.7 Charcoal

10.7.1 Process Description[1-4]

Charcoal is the solid carbon residue following the pyrolysis (carbonization or destructive distillation) of carbonaceous raw materials. Principal raw materials are medium to dense hardwoods such as beech, birch, hard maple, hickory, and oak. Others are softwoods (primarily long leaf and slash pine), nutshells, fruit pits, coal, vegetable wastes, and paper mill residues. Charcoal is used primarily as a fuel for outdoor cooking. In some instances, its manufacture may be considered as a solid waste disposal technique. Many raw materials for charcoal manufacture are wastes, as noted. Charcoal manufacture is also used in forest management for disposal of refuse.

Recovery of acetic acid and methanol byproducts was initially responsible for stimulating the charcoal industry. As synthetic production of these chemicals became commercialized, recovery of acetic acid and methanol became uneconomical.

Charcoal manufacturing kilns generally can be classified as either batch or continuous multiple hearth kilns; continuous multiple hearth kilns are more commonly used than are batch kilns. Batch units such as the Missouri-type charcoal kiln (Figure 10.7-1) are small manually-loaded and -unloaded kilns producing typically 16 megagrams (Mg) (17.6 tons) of charcoal during a 3-week cycle. Continuous units (Figure 10.7-2) produce an average of 2.5 Mg per hour (Mg/hr) (2.75 tons per hour [tons/hr]) of charcoal. During the manufacturing process, the wood is heated, driving off water and highly volatile organic compounds (VOC). Wood temperature rises to approximately 275°C (527°F), and the VOC distillate yield increases. At this point, external application of heat is no longer required because the carbonization reactions become exothermic. At 350°C (662°F), exothermic pyrolysis ends, and heat is again applied to remove the less volatile tarry materials from the product charcoal.

Fabrication of briquettes from raw material may be either an integral part of a charcoal producing facility, or an independent operation, with charcoal being received as raw material. Figure 10.7-3 presents a flow diagram for charcoal briquette production. Raw charcoal is first crushed to pass through an approximately 3 millimeter (0.12 inch) screen aperture and then stored for briquetting. The charcoal is then mixed with a binder to form a 65 to 70 percent charcoal mixture. Typical binder solutions are 9 to 10 percent by weight solutions of cornstarch, milostarch, or wheatstarch. Sawdust or other materials may be added to obtain faster burning or higher temperatures. Briquettes are then formed in a press and dried at approximately 135°C (275°F) for 3 to 4 hours, resulting in a product with a 5 percent moisture content. This process generates a briquette of approximately 90 percent pyrolysis product.

10.7.2 Emissions And Controls[3-12]

There are five types of products and byproducts from charcoal production operations: charcoal, noncondensible gases (carbon monoxide [CO], carbon dioxide [CO_2], methane, and ethane), pyroacids (primarily acetic acid and methanol), tars and heavy oils, and water. With the exception of charcoal, all of these materials are emitted with the kiln exhaust. Product constituents and the distribution of these constituents vary, depending on raw materials and carbonization parameters. Organics and CO are naturally combusted to CO_2 and water before leaving the retort. Because the extent of this combustion varies from plant to plant, emission levels are quite variable. Some of the

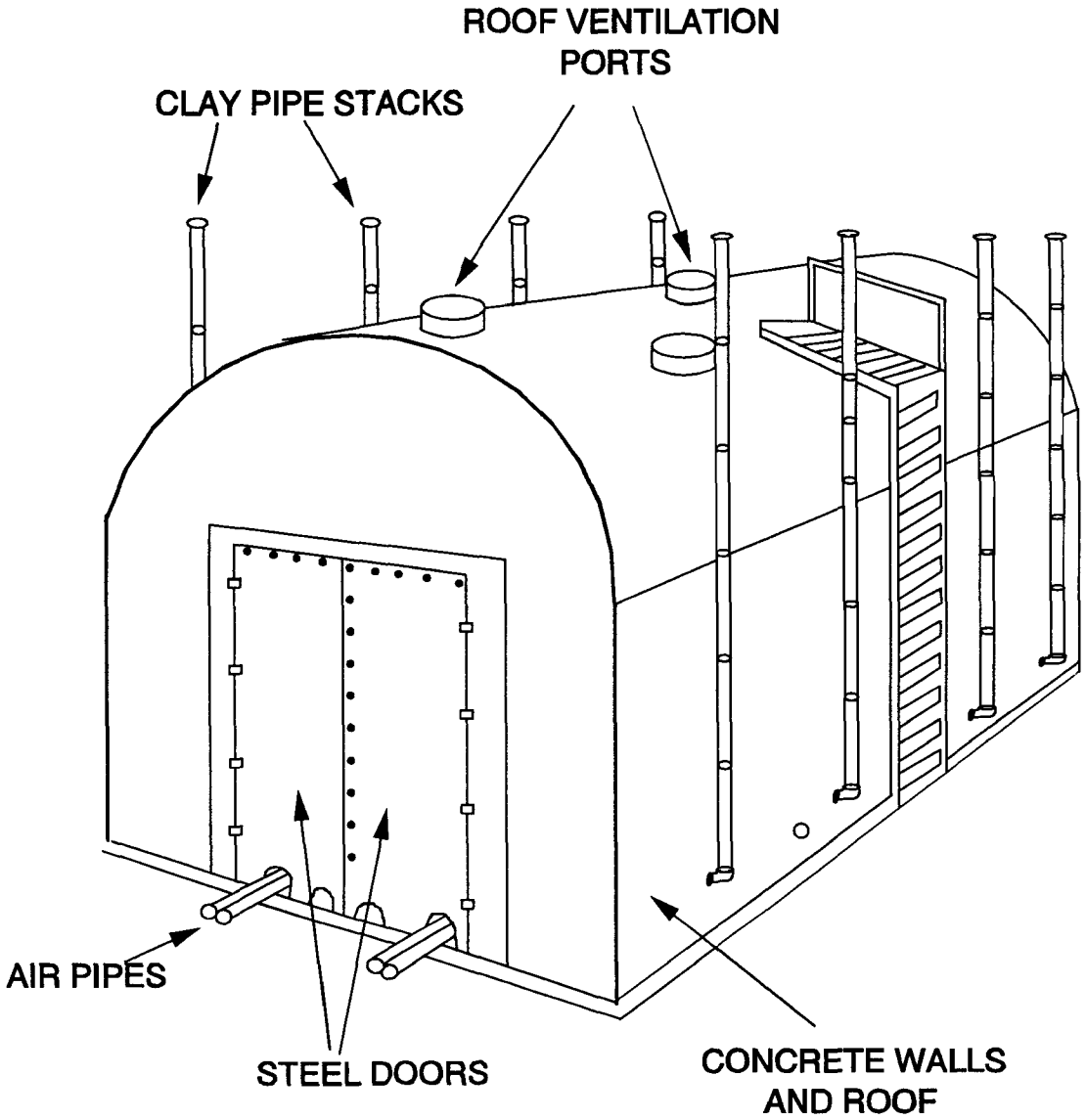

Figure 10.7-1. The Missouri-type charcoal kiln.[7]
(Source Classification Code: 3-01-006-03.)

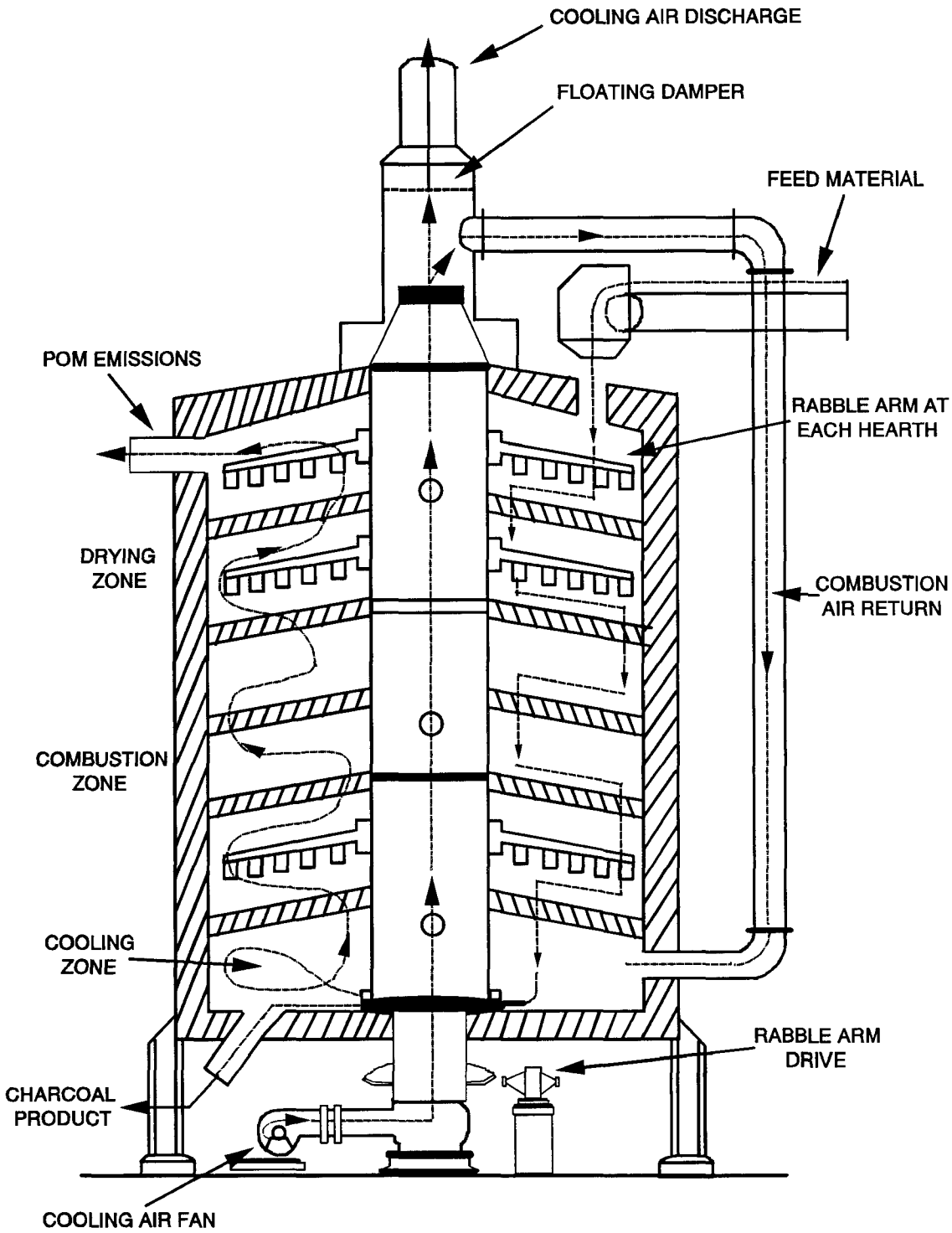

Figure 10.7-2. The continuous multiple hearth kiln for charcoal production.[4] (Source Classification Code: 3-01-006-04.)

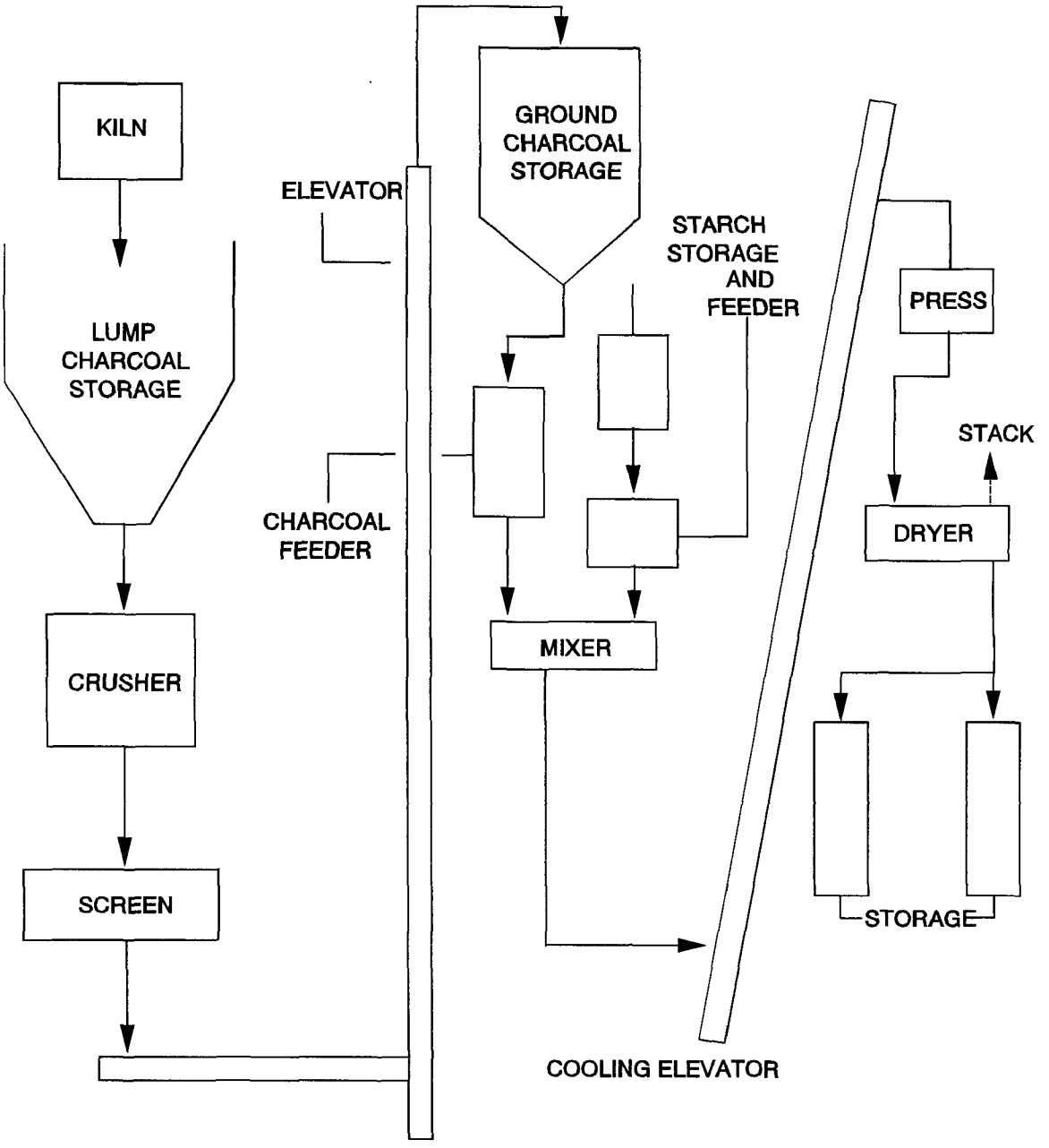

Figure 10.7-3. Flow diagram for charcoal briquette production.[3]
(Source Classification Code: 3-01-006-05.)

specific organic compounds that may be found in charcoal kiln emissions include ethane, methane, ethanol, and polycyclic organic matter (POM). If uncombusted, tars may solidify to form PM emissions, and pyroacids may form aerosol emissions.

The charcoal briquetting process is also a potential source of emissions. The crushing, screening, and handling of the dry raw charcoal may produce PM and PM-10 emissions. Briquette pressing and drying may be a source of VOC emissions, depending on the type of binder and other additives used.

Continuous production of charcoal is more amenable to emission control than batch production because emission composition and flow rate are relatively constant. Emissions from continuous multiple hearth charcoal kilns generally are controlled with afterburners. Cyclones, which commonly are used for product recovery, also reduce PM emissions from continuous kilns. Afterburning is estimated to reduce emissions of PM, CO, and VOC by at least 80 percent. Control of emissions from batch-type charcoal kilns is difficult because the process and, consequently, the emissions are cyclic. Throughout a cycle, both the emission composition and flow rate change. Batch kilns do not typically have emission control devices, but some may use after-burners.

Particulate matter emissions from briquetting operations can be controlled with a centrifugal collector (65 percent control) or fabric filter (99 percent control).

Emission factors for criteria pollutant emissions from the manufacture of charcoal are shown in Table 10.7-1. Table 10.7-2 presents factors for emission of organic pollutants from charcoal manufacturing.

Table 10.7-1 EMISSION FACTORS FOR CHARCOAL MANUFACTURING--CRITERIA POLLUTANTS AND CO_2[a]

EMISSION FACTOR RATING: E

	lb/ton				
Source	Total PM[b]	NO_x	CO	VOC	CO_2
Charcoal kiln[c] (SCC 3-01-006-03, -04)	310[d]	24[e]	290[f]	270[g]	1,100[f]
Briquetting[h] (SCC 3-01-006-05)	56[f]	ND	ND	ND	ND

[a] Factors represent uncontrolled emissions. SCC = Source Classification Code. ND = no data. Emission factors units are lb/ton of product. One lb/ton = 0.5 kg/Mg.
[b] Includes condensibles and consists primarily of tars and oils.
[c] Applicable to both batch and continuous kilns.
[d] References 2,6-7.
[e] Reference 3. Based on 0.14 percent nitrogen content of wood.
[f] References 2,6-7,11.
[g] References 2-3,6.
[h] For entire briquetting process.

Table 10.7-2. EMISSION FACTORS FOR CHARCOAL MANUFACTURING--MISCELLANEOUS ORGANIC POLLUTANTS[a]

EMISSION FACTOR RATING: E

Source	Pollutant	Emission factor, lb/ton
Charcoal kiln[b] (SCC 3-01-006-3, -04)	Methane[c]	110
	Ethane[d]	52
	Methanol[e]	150
	POM[f]	0.0095

[a] Factors represent uncontrolled emissions. SCC = Source Classification Code. Emission factors units are lb/ton of product. One lb/ton = 0.5 kg/Mg.
[b] Applicable to both batch and continuous kilns.
[c] References 2,6.
[d] References 3,6.
[e] Reference 2.
[f] Reference 7.

References For Section 10.7

1. *Air Pollutant Emission Factors*, APTD-0923, U. S. Environmental Protection Agency, Research Triangle Park, NC, April 1970.

2. R. N. Shreve, *Chemical Process Industries*, Third Edition, McGraw-Hill, NY, 1967.

3. C. M. Moscowitz, *Source Assessment: Charcoal Manufacturing State of the Art*, EPA-600/2-78-004z, U. S. Environmental Protection Agency, Cincinnati, OH, December 1978.

4. Radian Corporation, *Locating And Estimating Air Emissions From Sources Of Polycyclic Organic Matter (POM)*, EPA-450/4-84-007p, U. S. Environmental Protection Agency, Research Triangle Park, NC, May 1988.

5. *Riegel's Handbook Of Industrial Chemistry*, Seventh Edition, J. A. Kent, ed., Van Nostrand Reinhold, NY, 1974.

6. J. R. Hartwig, "Control of Emissions from Batch-Type Charcoal Kilns", *Forest Products Journal*, *21*(9):49-50, April 1971.

7. W. H. Maxwell, *Stationary Source Testing Of A Missouri-Type Charcoal Kiln*, EPA-907/9-76-001, U. S. Environmental Protection Agency, Kansas City, MO, August 1976.

8. R. W. Rolke, *et al.*, *Afterburner Systems Study*, EPA-RZ-72-062, U. S. Environmental Protection Agency, Research Triangle Park, NC, August 1972.

9. B. F. Keeling, *Emission Testing The Missouri-Type Charcoal Kiln*, Paper 76-37.1, presented at the 69th Annual Meeting of the Air Pollution Control Association, Portland, OR, June 1976.

10. P. B. Hulman, *et al.*, *Screening Study On Feasibility Of Standards Of Performance For Wood Charcoal Manufacturing*, EPA Contract No. 68-02-2608, Radian Corporation, Austin, TX, August 1978.

11. *Emission Test Report, Kingsford Charcoal, Burnside, Kentucky*, prepared by Monsanto Research Corporation for U. S. Environmental Protection Agency, Research Triangle Park, NC, August 1980.

12. Written communication from J. Swiskow, Barbecue Industry Association, Naperville, IL, to D. Safriet, U. S. Environmental Protection Agency, Research Triangle Park, NC, February 11, 1994.

10.8 Wood Preserving

[Work In Progress]

U.S. Environmental Protection Agency
Region 5, Library (PL-12J)
77 West Jackson Boulevard, 12th Floor
Chicago, IL 60604-3590

U.S. Environmental Protection Agency
Region 5, Library (PL-12J)
77 West Jackson Boulevard, 12th Floor
Chicago, IL 60604-3590