INCINERATION

IN

HAZARDOUS WASTE MANAGEMENT

This publication (SW-141) was prepared by the Hazardous Waste Management Division of the Office of Solid Waste Management Programs. This report was prepared by A. C. Scurlock, A. W. Lindsey, T. Fields, Jr. and D. R. Huber.

U. S. ENVIRONMENTAL PROTECTION AGENCY

1975

Third Printing

Mention of a commercial product or organization does not constitute endorsement or recommendation for use by the U. S. Government.

TABLE OF CONTENTS

Introduction	1
Background	2
Types of Incinerators	3
Incineration Criteria	16
Research and Development	18
References	23

APPENDIX

I	Rotary Kiln	29
II	Multiple Hearth	37
III	Liquid Injection	43
IV	Fluidized Bed	58
V	Molten Salt	63
VI	Wet Oxidation - Zimmerman Process	66
VII	Plasma Destruction	70
VIII	Multiple Chamber	72
IX	Gas Combustion	76
X	Pyrolysis	82
XI	Incineration of Specific Materials	84

LIST OF FIGURES

APPENDIX		PAGE
I	Portable Rotary Kiln Incineration Units	30
I	Typical Major Industrial Rotary Kiln Incineration Facility	32
II	Multiple Hearth Incineration System	38
II	Pilot Furnace System	40
III	Typical Vertically Fired Liquid Waste Incineration	45
III	Vortex Liquid Waste Incinerator	46
III	Typical "SUE" Burner Cross-Section	52
IV	Schematic of a Fluidized Bed Combustor	59
VI	Wet Oxidation System Schematic	67
VIII	Multiple Chamber Incinerator	73
IX	Direct-Flame Thermal Incinerator	77
IX	Catalytic Incinerator	78

LIST OF TABLES

TABLE		PAGE
I	Rotary Kiln Incineration	5
II	Multiple Hearth Incineration	6
III	Liquid Injection Incineration	7
IV	Fluidized Bed Incineration	9
V	Molten Salt Process	10
VI	Wet Oxidation - Zimmerman Process	11
VII	Plasma Destruction	12
VIII	Multiple Chamber Incineration	13
IX	Gas Combustion	14
X	Pyrolysis	15

INTRODUCTION

Incineration has been developed over a number of years as a means of treating or disposing of various types of waste materials. Only recently, however, has the application of the incineration process to solving hazardous waste problems been investigated in any depth. This work has been sporadic and widely spread. In 1973 an effort was made by TRW Systems Group under EPA contract to review the available information and summarize the state-of-the-art of hazardous waste incineration. This work was included in a broader effort to identify and analyze all treatment and disposal practices potentially applicable to hazardous wastes.

Since issuance of this pioneer study, sufficient additional information has surfaced to justify a new compendium. In this report OSWMP has extracted the most useful information from the "TRW report" and added pertinent information from office files.

The information and data contained are for information and guidance purposes only. The report does not present regulations or guidelines for treatment or disposal. It is meant simply to be a digest of the most useful technical and economic information on the subject known to the Hazardous Waste Management Division of the Office of Solid Waste Management Programs, EPA. Much of the information has been received from contractors and other outside sources and has been accepted largely on face value. OSWMP therefore cannot confirm data presented or formally endorse the processes or equipment discussed.

This report will prove most useful to those not intimately familiar with hazardous materials or with incineration technology. It can serve as a starting point in addressing any situation or question involving hazardous waste incineration. The report body presents an overview of the state-of-the-art, summaries of data on various types of incinerators, and a list of general considerations to be addressed when evaluating hazardous waste incineration questions. Appendices I through X contain more detailed discussions of process technology economics and known experimentation with hazardous wastes. Reference to these appendices should provide the reader with a process concept and basic understanding of the capabilities of the incinerator type in question and some insight into its potential for hazardous waste disposal. Appendix XI is a matrix indicating known incineration criteria for individual wastes. Reference to this matrix is useful in determining if incineration of the material is feasible, whether resource recovery methods may be available, potential off gas constituents of concern, and in some cases estimates of satisfactory temperature/residence time conditions.

OSWMP anticipates revising this periodically as additional information becomes available.

BACKGROUND

As we become increasingly aware of the problems and potential problems created by ocean dumping, well disposal, indiscriminate landfilling, and other relatively cheap disposal options for hazardous wastes, and as air and water pollution controls are applied, incineration is being looked to as the overall best means of destroying the increasing quantities of many hazardous wastes. The number and types of commercial and industrial hazardous waste incinerators are proliferating at a rapid rate.

Incineration is a very versatile process. It can be considered as an energy recovery process if the heat generated is converted into steam and power or is put to some other beneficial use. It can be considered as a volume reduction process in that many of the component elements of organic materials, including the most common ones (carbon, hydrogen, oxygen, chlorine, sulfur), are wholly or partially converted to gaseous form leaving only the non-combustible inorganic volume. Incineration is also a viable means of detoxifying many materials. If the toxic or otherwise hazardous property is due to the structure of the organic molecule as opposed to the properties of the elements which it contains, then, in most cases, it is possible to destroy the hazardous property by destroying the organic molecular structure through oxidation or the application of sufficient heat. There are additional advantages to the use of incineration:

(a) Burning of wastes and fuels in a controlled manner has been carried on for many years and as such, the basic process technology is available and reasonably well developed. This is not the case for some of the more exotic chemical degradation processes.

(b) It is broadly applicable to most organic wastes and can be scaled to handle very large volumes.

(c) Large land areas are not required.

There are some generally applicable disadvantages:

(a) The equipment tends to be more costly and complicated to operate than many other alternatives.

(b) It is not always a means of ultimate disposal in that normally an ash remains which may or may not be toxic, but which, in any case, must be disposed.

(c) Unless controlled by application of air pollution control technology, the gaseous and particulate products of combustion can be hazardous to health or damaging to property.

The decision to incinerate a specific waste will therefore depend first, on the environmental adequacy of incineration as compared to other alternatives, and second, on the relative costs of incineration and the environmentally sound alternatives.

TYPES OF INCINERATORS

For purposes of consideration in this synopsis, an incinerator is any engineered device used to thermally decompose a hazardous waste. There are 10 general types which may prove adequate for destruction of at least some hazardous wastes. Other types, such as flares and open pit methods, are not considered adequate for hazardous waste disposal, due, in most cases, to uncontrolled dispersal of products of combustion, breakdown products, and ash.

Most incinerators currently routinely burning hazardous materials are installed either at industrial plant sites where the wastes are generated, or at privately owned central disposal facilities. On-site incinerators are usually installed only by larger companies having quantities of incineratable materials large enough to justify the expense. By operating on-site facilities, shipping charges can be eliminated. On the other hand, for small volume, very difficult to handle wastes, it is frequently cheaper and certainly easier to pay the shipping and disposal charges to a private central facility than to build and operate an on-site facility. In recent years, a number of firms have gone into the contract waste disposal business. These central facilities usually have some incineration capability. In many cases, incineration is the only operation carried on.

Chem-Trol Pollution Services, Inc., of Model City, New York, and Rollins Environmental Services, Inc., Bridgeport, New Jersey, are two of the larger, more complex central disposal operations currently in existence. Chem-Trol claims capabilities to handle and treat virtually any liquid industrial waste which is not radioactive or explosive. Plant operations include distillation, filtration, neutralization, chemical fixation, centrifugation, extraction, special landfilling, and incineration.[2] The Rollins operation in New Jersey is similar, having neutralization, chemical oxidation, physical separation, dewatering, land disposal, trickling filtration, oxidation ponding, and incineration capabilities. Several other firms offer incineration disposal services as well.

All hazardous waste incinerators in this country are land based. However, in Europe, the Hansa Company of Germany has outfitted a 102 meter (335 foot) long tanker with two liquid injection incinerators and routinely destroys liquid chlorinated hydrocarbons 80 to 100 Km. (50-60 miles) at sea under contract to Dutch and German chemical companies.[4] The company is currently investigating the feasibility of operating a similar vessel off the U.S. Eastern seaboard. The claimed advantages of burning at sea include:

1. Environmentally preferable to ocean disposal. Pollutants are dispersed over wide areas, distant from land.

2. The cost of destructing toxic wastes at sea is less than the comparable destruction on land. The cost of destructing chlorinated hydrocarbons at sea is estimated at $61/metric ton ($55/ton). The cost savings over land disposal is due to the absence of any pollution control equipment on the incinerator vessel. The overall environmental impact of incinerating hazardous wastes on this vessel is not known.

The tables included in this section summarize available data for each of the incinerator types. Detailed process descriptions, flow diagrams, and available cost information are presented in Appendices I through X. The potential for application of the process for hazardous waste destruction is also addressed and experimental experience discussed in the Appendices.

Emission control facilities are usually required for hazardous waste incineration. Control devices are normally adaptable to flue gas streams from any of the incinerator types or models covered in this report. Scrubbing devices, the most common emission control equipment, are useful in reducing sulfur oxides, nitrogen oxides, particulates, and hazardous breakdown products. Packed tower and venturi scrubbers are the most widely used types, although there are a great many other types which may be applicable. Caustic solutions are frequently used when scrubbing acidic materials such as halogenated combustion products. Neutralization and proper disposal of the scrubber solution blowdown is necessary. Electrostatic precipitators, demisters, bag houses, and other mechanical devices also find use for particulate control.

TABLE I

ROTARY KILN INCINERATION

Process Principle: Slowly rotating cylinder mounted at slight incline to horizontal. Tumbling action improves efficiency of solid waste destruction. Technology adapted from lime processing.

Application: Most organic wastes; well suited for solids and sludges; liquids and gases fired through auxilairy nozzles.

Combustion Temperatures: 810°-1650°C (1500°-3000°F)[5]

Residence Times: Several seconds to several hours[5]
(liquids and gases-short, solids much longer)

Economics: Installed capital - $2800-$11,200/daily metric ton
($2500-$10,000/daily ton)[5,6]
Kiln maintenance - 5-10% of installed cost/yr.[7]

Examples:

(1) Thumbleburner[8] - manuf. by Bartlett-Snow
Commmerically available
Capacity - 45 Kg-1.8 metric tons/hr. (100 lbs.-2 tons/hr.)
Solid waste heating values acceptable - 550-8250 Kg.-cal./Kg.
(1000 - 15,000 BTU/lb.)

(2) Dow Chemical-Midland, Michigan
Industrial chemical waste unit
Temperatures - 810°C (1500°F) normal[9,10,11]
Heating value capacity - 16×10^6 Kg.-cal./hr.[9]
(65×10^6 BTU/hr.)

(3) Rollins Environmental Services-Logan Township, New Jersey[12]
Central industrial waste facility
Temperatures - 870°C (1600°F)

(4) Chemical Agent Munitions Disposal System[13]
U.S. Army Materiel Command
Under development - obsolete munitions
Temperatures - 260°C-650°C (500°F-1200°F)

TABLE II

MULTIPLE HEARTH INCINERATION

Process Principle: Solid feed slowly moves through vertically stacked hearths, gases and liquids fed through side ports and nozzles. Current applications largely in sewage sludge incineration.

Application: Most organic wastes; well suited for solids and sludges, also handles liquids and gases.

Furnace Temperatures: (with sewage sludge)[1]
drying zone - 320-540°C (600-1000°F)
incineration zone - 760-980°C (1400=1800°F)

Residence Times: Up to several hours for solids

Economics: Basis dry solids (sludge 75% moisture)
Installed cost - $55-$495/Kg./hr. ($25-225/lb./hr.) capacity
Operating cost - $3-$24/metric ton ($2-$22/ton)14,16

Example:

(1) Palo Atlo, California municipal sludge incinerators, 2-6 hearth units, each 450 Kg. (1000 lb.)/hr. dry solids capacity

TABLE III

LIQUID INJECTION INCINERATION

Process Principle: Vertical or horizontal vessel; wastes atomized through nozzles to increase rate of vaporization.

Application: Limited to pumpable liquids and slurries (750 SSU or less for proper atomization)[17]

Combustion Temperatures: 650°-1650°C (1200°-3000°F)

Residence Times: .1-1 second[18]

Economics: Operating cost - $.25-$65.00/1000L ($1-$250.00/1000 gal.)[19]

Examples:

(1) Pickands Mather and Company (Prenco Div.)[20]
Commercially available
Temperatures - 870°-1650°C (1600°-3000°F)

(2) Vortex Combuster[6,21]
Commercially available
Temperatures - 650°-870°C (1200°-1600°F)
Heat release capacity - 900,000 Kg.-cal./hr./m^3
(100,000 BTU/hr./$ft.^3$)

(3) Thermal Oxidizer - Chem-Trol Pollution Services, Inc., Model City, N.Y.[22]
Central industrial waste facility
Temperatures - 1650°C (3000°F) maximum

(4) Rollins Environmental Services-Logan Township, New Jersey [23,24]
Central industrial waste facility
Capacity - 3800L/hr. (1000 gal./hr.)
Temperatures - 1000°-1200°C (2000°-2200°F)
Residence time - 2.5 seconds

(5) General Electric Corp., Pittsfield, Massachusetts[25]
(designed by John Zink Co.)
Industry chemical waste incinerator
Capacity - 8 - 15L (2-4 gal.)/min.
Temperatures - 980°-1310°C (1800°-2400°F)
Residence time - 1-12 seconds

TABLE III (con't)

(6) Dow Chemical-Midland, Michigan[10,26]
Four industrial chemical waste incinerators
Heat release capacities:

(a) 20×10^6 Kg.-cal. (81×10^6 BTU)/hr.
(b) 14×10^6 Kg.-cal. (56×10^6 BTU)/hr.
(c) 8×10^6 Kg.-cal. (32×10^6 BTU)/hr
(d) 16×10^6 Kg.-cal. (65×10^6 BTU)/hr.

Temperatures - 980°C (1800°F) normal

(7) Thermal Destructor - Canadian Defence Research Establishment, Ralston, Alberta [27,28,29]

Constructed to dispose of DDT
Designed by - Garver Davis, Inc., Cleveland, Ohio
Capacity - 380L (100 gals.)/hr.
Temperature - 900°C (1650°F) normal
Operating cost - $.05/L ($.20/gal.)

(8) Hansa Company-Rotterdam, Netherlands[4,30,31]
Shipboard contract industrial waste incineration service (2 incinerators)
Capacity - 9 metric tons (10 tons)/hr. each
Temperature - 1650°C (3000°F) maximum
Projected U.S. cost - $61/metric ton ($55/ton)

(9) Sudden Expansion (SUE) Burner[1,32,33,34,35]
Marquardt Company, Van Nuys, California
Temperatures - 540°-3150°C (1000°-5700°F)
Residence time - 1/2 second

TABLE IV

FLUIDIZED BED INCINERATION

ocess Principle: Wastes are injected into a hot agitated bed of ert granular particles; heat is transferred between the bed material ften sand) and the waste during combustion.

plication: Most organic wastes; ideal for liquids, also handles lids and gases.

mbustion Temperatures: 750°-870°C (1400°-1600°F)1

sidence Times: Seconds for gases, liquids; longer for solids

onomics: Reported capital costs - For liquids $265-$635/liter/hr. ($1000-$2400/gal./hr.)[36]
For solids - $110-$290/Kg./hr. ($50-$130/lb./hr.)
Operating cost - approx. $28/metric ton ($25/ton) dry solids[37]
Project operating costs - For liquids - $.0025-$.021/liter ($.01-.08/gal)
For sludges - $22-$44/metric ton ($20-$40/ton) dry solids[37,38]

amples:

(1) LSW Disposal System, Combustion Power Co., Menlo Park, Calif.[39,40,41,42,43]
Recently commercially available
Temperatures - 810°C (1500°F) normal

(2) Franklin, Ohio Resource Recovery plant[44]
EPA demonstration grant-municipal refuse 7.6 m. 25 (ft.) I.D. reactor-burns organic nonrecoverables
Temperatures - 750°-810°C (1380°-1500°F)

TABLE V

MOLTEN SALT PROCESS

Process Principle: Wastes are injected into a bed of molten salt (usually sodium carbonate) where combustion occurs; salts may react with and retain off gases.

Application: Most organic wastes

Combustion Temperatures: 810-980°C (1500-1800°F)[45]

Residence Times: 3/4 second average[46]

Economics: Proposed investment cost for complete portable 230Kg (500 lb)/hr unit $500,000[47], for a 90 Kg (200 lb)hr. unit with salt regeneration, $800,000.[46]

Examples:

(1) Atomics International, Canoga Park, Calif.[48]
Pilot plant stage
Capacity - 4.5 metric tons (5 tons)/day

TABLE VI

WET OXIDATION - ZIMMERMAN PROCESS

Process Principle: Oxidation of organic materials in a liquid state under high pressure at moderate temperatures. Sulfur, nitrogen, and halogen breakdown products are retained in liquid effluent.

Application: Soluble and water miscible organic wastes.

Oxidation Pressure: 316,000 - 1,758,000 Kg/m^2 gauge (450-2500 psig)[49,50]

Residence Time: 10-30 min.[51]

Economics: Total treatment costs (capital and operating) - $.025-.525/liter (.00.-.02¢/gal.)[51]
Equipment costs - $200,000-$600,000[51] (75Lpm (20gpm) system)

Example:

(1) Biotechnology Division, Lockheed Missiles and Space Co., Inc. Sunnyvale, California[49,50,51]
Pilot plant unit
Capabilities as above

TABLE VII

PLASMA DESTRUCTION

Process Principle: Wastes are injected into high energy plasma; energy transfer degrades organic bonds.

Application: Work has been limited to gases, perhaps adaptable to liquids and solids.

Temperatures: 150°C (300°F)[52]

Residence Times: 0.1-1.0 seconds

Economics: Installed cost (laboratory unit) - $10,000[53]
Cost of electricity - 22¢/Kg destroyed[50] (10¢/lb.)

Example:

(1) Lockheed Missiles and Space Co., Research Labs., Palo Alto, Calif.[54]
Only known developer
Laboratory scale unit

TABLE VIII

MULTIPLE CHAMBER INCINERATION

Process Principle: Wastes are combusted on a grate or hearth in an ignition chamber; gases travel through mixing and secondary combustion chambers; most common application is municipal refuse incineration.

Application: Limited to solid materials; sludges, powders, tars and other wastes not acceptable.

Combustion Temperatures: 540°C (1000°F) normal[1]

Residence Times: Solids-minutes, Gases -seconds

Economics:

Installed cost:	\$17.50-\$37.50/hourly Kg capacity (\$8.00-\$17.00/hourly pound capacity)[1]
Operating costs:	\$16.00-\$18.00/metric ton (\$15.00-\$16.00/ton) (includes capital cost)

TABLE IX

GAS COMBUSTION

Process Principle:

a. Flare - open burning from a nozzle
b. Direct flame - combustion at elevated temperatures in presence of flame.
c. Catalytic oxidation - waste gas is preheated prior to exposure to catalyst bed where the oxidation reaction occurs.

Application:

a. Flares - not environmentally suitable for hazardous materials.
b. Direct flame - gases with BTU values less than 25% of the lower flammable limit.
c. Catalytic oxidation - gases with low BTU values (about 180 Kg-cal/m^3 (20 BTU/scf) max.)

Combustion Temperatures:

a. Flares - dependent upon waste heat value
b. Direct flame - 450-810°C (850-1500°F)[1]
c. Catalytic combustion - 320-540°C (600-1000°F)[1]

Residence Times:

a. Flare - negligible
b. Direct flame - 0.3-0.5 seconds[1]
c. Catalytic oxidation - 1 second

Economics: [1,21, 55, 56, 57]

a. Flare - capital cost $.22-$22/SCMM ($.006-$.60/SCFM)
b. Direct flame - Capital cost
   w/o heat exchanger $54-$71/SCMM ($1.50-$2/SCFM)
   with heat exchanger $71-$161/SCMM ($2-$4.50/SCFM)
   Operating cost - $3.07-$3.78/100 SCMM ($.86-$1.06/1000 SCFM)
c. Catalytic oxidation - Capital cost

140 SCMM (5000 SCFM) unit w/o heat exchanger	$71/SCMM ($2/SCFM)
280 SCMM (10,000 SCFM) unit w/o heat exchanger	$71-$89/SCMM ($2-$2.50/SCFM)
280 SCMM (10,000 SCFM) unit with heat exchanger	$100-$161/SCMM ($2.80-$4.50/SCFM)

Fuel cost - $0-$15,000/yr

TABLE X

PYROLYSIS

Process Principle: Thermal decomposition in the absence of oxygen transforms organic materials into solids, liquids, and gaseous organic materials of simpler structure.

Application: Primarily useful with solids and sludges-potential for resource recovery of breakdown products (primarily as fuel).

Retort Temperatures: 480-810°C (900-1500°F) normal

Residence Times: 12-15 minutes normal[1]

Economics:[58] (municipal refuse) Total investment cost
$11,000-$15,000/daily metric ton capacity
($10,000-$14,000/daily ton capacity)

Project operating cost
$4.50-$10/metric ton ($4-$9/ton)

Examples:

(1) Kemp Converter - Kemp Reduction Corp.[59, 60, 61, 62]
Pilot plant stage - untried with hazardous materials

(2) San Diego, California - Garrett Research Corp. design, EPA demonstration - municipal refuse
181 metric TPD (200 TPD), fuel oil recovery

(3) Baltimore, Maryland - Monsanto design - Landgard, EPA demonstration - municipal refuse
907 metric TPD (1000 TPD), fuel gas recovery

(4) Erie County, New York - Carborundum design
Municipal and special wastes - pilot unit
68 metric TPD (75 TPD) - pyrolysis unit, combustion unit

INCINERATION CRITERIA

A vast number of different waste materials, representing a broad spectrum of physical and chemical characteristics, can be destroyed by incineration. However, temperature and residence time conditions necessary for complete destruction vary widely depending on chemical structure and physical form. Also, the characteristics and capabilities of the 10 major types of incinerators (and the many models of each) differ widely. Thus, the ideal combination of incinerator type and model, and temperature/dwell time conditions will vary widely for each waste. This contrasts with municipal waste incinerators where the feed (refuse) is relatively uniform with time and from place to place.

Our knowledge of specific incineration criteria for individual wastes is limited. Appendix XI presents known requirements for some materials. It is possible, however, to formulate general considerations which, if addressed, should be helpful in planning incineration activities and in precluding serious health hazards or environmental degradation.

(1) Generally speaking, only organic materials are candidates for incineration although some inorganics can be thermally degraded.

(2) Chlorine-containing organics emit extremely corrosive hydrogen chloride gas upon incineration. Other halogens behave similarly. Materials of construction should be chosen accordingly and suitable emission scrubbers provided (packed tower, venturi, or equivalent). Scrubbing solutions of caustic soda appear to be the most suitable. Combustion units have been developed which are capable of recovering useable hydrogen chloride.

(3) Organic materials containing dangerous heavy metals (mercury, arsenic, selenium, lead, cadmium) should not be incinerated unless the fate of the metal components in the environment is known or can be satisfactorily controlled by air and water pollution control equipment. These heavy metals may be vaporized but more commonly will exist as an oxide in the ash or as a particulate. Resource recovery of metals from the ash or scrubber effluent should be considered. If the residuals are hazardous, landfilling of the ash or scrubber sludge should be examined with care to ensure that health hazards or environmental degradation do not occur due to leaching of toxic metal ions to subsurface waters or wind dispersal of toxic ash. Encapsulation prior to burial or permanent storage may be necessary.

(4) Sulfur-containing organic materials will normally emit sulfur oxide on incineration. Care should be taken to remove these materials from stack gases if present in appreciable concentration.

(5) Formation of nitrogen oxides can be minimized by keeping incineration temperatures below 1100°C (2000°F).

(6) The destruction ratio of a given material upon incineration is dependent to a large extent on the relationship of incineration temperature to dwell time at that temperature. The higher the temperature used, the shorter the permissible dwell time necessary to achieve a given destruction ratio. As a general rule most organic hazardous materials can be virtually completely destroyed at 1000°C (1830°F) at a dwell time of 2 seconds. Many are completely destroyed at lower temperature/dwell time conditions; a few require more rigorous conditions. Incineration of hazardous organics should not be carried out unless the necessary conditions are known or unless test burns are first conducted to determine off-gas characteristics.

(7) The hazard posed by incineration of a hazardous material is largely a function of amounts, nature, and distribution of the combustion products entering the environment. These products may be undegraded hazardous material, partially degraded toxic breakdown products, or hazardous end-products such as sulfur oxides, hydrogen chloride, or heavy metals. They may exist as a gaseous or particulate emission to the atmosphere, or in the scrubber water, or as ash residue. Care must be taken that these materials are not dispersed or disposed of in concentrations capable of affecting health or damaging property or the environment. All applicable Federal, State, and local air emission and water effluent standards and regulations must be complied with.

(8) Incinerators burning hazardous materials should be equipped with automatic feed cut-off provisions in the event of either a flame-out or a reduction in reactor temperature below the temperature known to give complete combustion. This will help to prevent emission of unburned or only partially degraded materials to the atmosphere in the case of equipment malfunction.

RESEARCH AND DEVELOPMENT

As with the application of any new technology, there are a great many unanswered questions. Because the demand for use of the incineration process is already large and rapidly accelerating, there is an urgent need for answers to such questions as:

(a) Which materials can be satisfactorily incinerated?

(b) What are the necessary temperature-dwell relationships and the resulting destruction efficiencies?

(c) What are the characteristics of the off-gases and ash residues?

(d) Which incinerator types (fluid bed, molten salt, liquid injection, sewage sludge, etc.) are environmentally suitable for which wastes and what are the related costs?

(e) How can an incinerator be evaluated for suitability?

The search for answers has generated a number of research and development projects on the part of generators and manufacturers of equipment and to a lesser extent, the Government. Much of this work, particularly that carried on by industrial generators and commercial disposal facilities, can be characterized as efforts to refine existing practices and to determine environmental adequacy of existing techniques. EPA actions to ban use of some exisiting pesticides and to recommend disposal procedures for others have generated experimental work to determine incineration criteria for pesticides.

Since 1967, the Mississippi State University has been conducting pesticide disposal studies of a fundamental nature, under the sponsorship of the U.S. Department of Agriculture. Initial laboratory and pilot scale studies in incineration included the following:

1. Determination of combusting temperatures and volatile off-gases of selected pesticides.

2. Determination of design requirements for readily combustible pesticide containers.

3. Development of specifications for an incinerator or other device for the disposal of pesticides and containers.

This initial work was completed in 1970. The investigations involved 20 analytical grade pesticides and 20 of their most commonly used formulations. The 20 pesticides included 13 herbicides, 4 insecticides, 2 fungicides, and 1 nematocide as follows: 2,4-D, 2,4,5-T, dicamba, dalapon, picloram, DDT, dieldrin, atrazine, bromacil, paraquat, carbaryl, vernolate, DNBP, diuron, malathion, DSMA, DBCP, PMA, trifluralin, and zineb.

The several different pesticide container materials investigated were: Lithate 2,4-D, polyvinylchloride, clear polyethylene, amber polyethylene, polypropylene, Teflon, and milk cartons. Significant results included the following:[64, 65, 66, 67]

1. Combustible containers are completely combusted at 900°C (1650°F).

2. Combustible containers incinerate at 700°C (1290°F). Mixtures of pesticides and containers incinerate more readily than single pesticides or single containers.

3. Primary and secondary burning at 900°C (1650°F) achieves more complete combustion with minimum discharge of particulate matter.

4. The ashes of wettable powders contain bromine, arsenic, mercury and zinc among many other elements.

5. Incineration of pesticides and containers at 900°C (1650°F) produces hazardous and corrosive gases such as chlorine, fluorine, bromine, oxides of nitrogen and sulfur, and ammonia.

MSU also performed an investigation into the thermal decomposition of orange herbicides for the Air Force in 1972. The objectives of this work were to:

1. Determine the temperatures required for complete thermal degradation.

2. Determine the degradation products.

3. Determine the nature of the volatile off-gases of orange herbicide including dioxin content.

4. Evaluate suitable scrubbing agents to remove toxicants from the emissions.

This work was done in a laboratory scale incineration unit. Significant conclusions were the following:

1. A minimum temperature of 1000°C (1830°F) is necessary to insure complete destruction of pure dioxin.

2. The bulk of the dioxin is disintegrated at 850°C (1560°F).

3. Herbicide orange is completely destroyed at 900°C (1650°F).

4. No dioxin was detected in the incombustible residues, particulate matter, or the emission scrubbing solutions following incineration of herbicide orange at 750°C, 800°C, and 850°C (1380°F, 1470°F, and 1560°F).

5. Sodium hydroxide solutions of appropriate strength are for all practical purposes found to be the most efficient and desirable scrubbing solutions for the effluent stream.

6. One or more secondary burning chambers appear to be desirable for efficient incineration of herbicide orange.

Current MSU work, which will conclude in 1975, involves investigating the effects of thermally shocking pesticides at 300-400°C (570-750°) for 30 minutes and then land disposing them. It has been found that many pesticides degrade to relatively harmless materials at these low temperatures.

OSWMP supported a research contract in 1970 entitled Organic Pesticides and Pesticide Containers; A Study of Their Decontamination and Combustion which was performed by Foster Snell, Inc. The project objectives were to investigate the use of oxidizing agents and binding agents to aid in the destruction of pesticides, and to investigate the thermal destruction of pesticides in containers. Pesticides utilized included DDT, aldrin, diapon, dalapon, Sevin, and malathion. Notable conclusions and recommendations include the following:[68]

1. Binding agents retain the pesticide to ensure complete combustion.

2. Oxidizing agents aid in pesticide oxidation and lower the temperature required for completing combustion.

3. Binding agents alone were as effective in aiding pesticide destruction as a combination of oxidants and binding agents.

4. Polyethylene serves the same purpose as a binding agent and also serves as a suitable liner for most pesticide containers.

5. For combustion purposes, it is recommended that combustible pesticides be packaged in light polyethylene packs surrounded by a combustible container such as a corrugated package or fiber carton.

The Department of Defense is also funding research and demonstration activities to determine optimum methods for incineration of the many military hazardous wastes (pesticides, chemical warfare agents, obsolete munitions, etc.). The Combustion Power Corporation's LSW incinerator, a fluidized bed unit, is test burning six common military wastes for the Air Force. Included are: herbicide orange, aircraft washrack wastes, paint stripping wastes, and three types of petroleum lubricant wastes.[37] (See Appendix IV for details). Lockheed's Microwave Plasma Destructor has test destructed small quantities of nerve gas-like materials for the Army.[53] (See Appendix VII for details). Atomics International has done some work for the Navy in a pilot scale molten salt combustor to test destruct explosives and propellants.[47] (See Appendix V for details). The Marquardt Sudden Expansion (SUE) Burner, a sophisticated liquid injection model, has test destructed quantities of herbicide orange, solvent fumes, boron slurries, propellants, chlorinated hydrocarbons, DDT, and hydrazine.[35] TRW Systems is test destructing various pesticides for the Army in a laboratory liquid injection unit of in-house design.[69] (See Appendix III for details). The Canadian Defence Research Establishment has destroyed large quantities of DDT in its Thermal Destructor, a full-scale liquid injection incinerator, and intends to burn other hazardous materials.[27] (See Appendix III for details).

Some equipment manufacturers have undertaken demonstration programs on their own in efforts to gain acceptance for their equipment. For instance, Atomics International has destroyed test quantities of four pesticides (chlordane, Weed B Gon, malathion, and Sevin) in a laboratory molten salt unit.[27] (See Appendix V for details).

Most of the EPA effort relating to incineration has been directed toward burning of municipal refuse and to a lesser extent, sewage sludge. However, with the formation of OSWMP's Hazardous Waste Management Division (May 1973) and the identification of an increasing hazardous waste disposal problem,[70] EPA involvement in hazardous waste incineration began. A survey of the available information, as summarized in this report, was sufficient to quickly indicate the dearth of existing knowledge concerning specific incineration criteria. It was obvious that work in progress, being carried on by others and summarized above, would not be sufficient to fill the wide informational gaps. Clearly, to evaluate the place of incineration in the anticipated hazardous waste disposal regulatory program an EPA technology assessment, demonstration, and research effort in hazardous waste incineration is essential. In developing such a program, the overall goal of fostering the presence of adequate treatment/disposal technology and facilities for all hazardous wastes must be balanced against the immediate need for real world solutions to problems involving specific materials such as DDT and other pesticides. Key elements for the program are as follows:

a. Pesticide/Sewage Sludge Co-incineration Demonstration - A full scale demonstration of the feasibility of burning pesticides in conjunction with sewage sludge is to be carried out in the Palo Alto, California, multiple hearth sewage sludge incinerator facility. The work is expected to prove the suitability of one type of existing incinerator for the disposal of an excess pesticide, DDT, and one being considered for cancellation, 2,4,5-T.

b. Pesticides Incineration Criteria Research - The Solid and Hazardous Waste Research Laboratory (SHWRL/ORD) has contracted with the Midwest Research Institute to develop destruction ratio curves for various temperature/dwell time combinations for a series of pesticides. The pilot scale incinerator in use is a liquid injection model with solid feed capability. Pesticides to be included in this work are: DDT, picloram, malathion, zineb, captan, atrazine, mirex, toxaphene, and several others. The unit is equipped with a three stage scrubber system. Breakdown products will be analyzed. To date, preliminary test burns of DDT have been conducted and a 99.5% destruction ratio was reportedly achieved.[71,72,73]

c. Technology Assessment - An OSWMP in-house technology assessment program is underway which is characterized by a large number of on-site visitations and interviews with experts in the various technology areas. This work is expected to provide both short-term answers to currently identified problems, and also to identify available technology which can be brought to bear on identified problem areas. While this effort is not limited to incineration processes, it is one of the focal points of study along with landfilling and chemical degradation.

d. Hazardous Waste Incineration Demonstration - A large scale demonstration project is being developed by OSWMP to test the suitability of various types of thermal destruction units for the disposal of representative types of organic hazardous wastes. Preliminary plans call for test incinerating approximately 50 materials in a variety of incinerator models. Destruction ratios and breakdown products will be determined for various temperature/dwell time conditions.

In addition to the above scheduled work, OSWMP is making an in-house assessment of the impact of air and water pollution control implementation on the types and quantities of potentially hazardous wastes for land disposal. This work is expected to identify the waste types which are likely to cause the greatest problems. This information coupled with the technology assessment work previously discussed will identify where future technology development and demonstration efforts must be concentrated.

REFERENCES

1. Ottinger, R. S., J. L. Blumenthal, D. F. Dal Porto, G. I. Gruber, M. J. Santy, and C. C. Shih. Disposal process descriptions-ultimate disposal, incinerations, and pyrolysis processes. In Recommended methods of reduction, neutralization, recovery or disposal of hazardous waste. v.3. Washington, U. S. Environmental Protection Agency, August 1973. 251 p. (Distributed by National Technical Information Service, Springfield, Va., as PB-224 582.)

2. Personal Communication. E. Schuster, Chem-Trol Pollution Services, to A. W. Lindsey and T. Fields, Office of Solid Waste Management Programs, Jan. 16, 1974.

3. Rollins Environmental Services, Inc. Unpublished data, July 1973.

4. Personal Communication. D. Carruth and W. Allen, American Eagle Foundation, to A. W. Lindsey and A. C. Scurlock, Office of Solid Waste Management Programs, Dec. 1973.

5. Santy, M. Rotary kiln incineration. Cleveland, Bartlett-Snow Company, Jan. 1972. (Unpublished report.)

6. Witt, P. A., Jr. Disposal of solid wastes. Chemical Engineering, 78(22):62-78, Oct. 4, 1971.

7. Perry, R. H. and C. H. Chilton, eds. Chemical engineers' handbook. 5th ed. New York, McGraw-Hill Book Company, [1973.] 1v. (various pagings). (McGraw-Hill Chemical Engineering Series.)

8. Tumble-burner. Bulletin 205B. Cleveland, Bartlett-Snow Company, 1970. 6p.

9. Novak, R. G. Eliminating or disposing of industrial solid wastes. Chemical Engineering, 77(21):78-82, Oct. 5, 1970.

10. Novak, R. G. Industrial solid waste disposal. Presented at Solid Industrial Wastes Symposium, Annual Meeting, American Institute of Chemical Engineers, Houston, Feb. 28-Mar. 4, 1971. 13 p.

11. Personal communication. R. Novak, Dow Chemical Company to J. P. Lehman and S. Morekas, Office of Solid Waste Management Programs, Nov. 1972.

12. Personal communication. Rollins Environmental Services, Inc., to Office of Solid Waste Management Programs, July 1973.

13. Department of the Army, Edgewood Arsenal. Transportable disposal systems; environmental statement. Special publication, EASP 200, July 1971. 297 p.

14. Sebastian, F. P., and P. J. Cardinal. Solid waste disposal. Chemical Engineering, 75(22):112-117, Oct. 14, 1968.

15. Unterberg, W., R. J. Sherwood, and G. R. Schneider: Component costs for multiple-hearth sludge incineration from field data. In Proceedings; 1974 National Incinerator Conference, Miami, Florida, May 12-15, 1974. New York, American Society of Mechanical Engineers, 1974. p. 289-309.

16. Personal communication. R. Fox, Envirotech, Inc., to A. Scurlock, Office of Solid Waste Management Programs, Mar. 5, 1974.

17. Ross, R. D., ed. Industrial waste disposal. New York, Reinhold Book Corporation, [1968.] 340 p. (Reinhold Environmental Engineering Series.)

18. Demarco, J., D. J. Keller, J. Leckman, and J. L. Newton. Municipal-scale incinerator design and operation. Formerly titled "Incinerator Guidelines-1969." Public Health Service Publication No. 2012. Washington, U. S. Government Printing Office, 1969. 98 p.

19. PCB retreats again. Chemical Week, 110(5): 14-15, Feb. 2, 1972.

20. Prenco; the modern approach to liquid pollution control. Detroit, Pickands Mather and Company. 7 p.

21. Lund, H. F., ed. Industrial pollution control handbook. New York McGraw-Hill Book Company, [1971.] 1v (various pagings.)

22. Wagner, L. E. Contract waste disposal. Presented at Open Meeting, American Society of Mechanical Engineers, New York, Sept. 9, 1971. 6 p.

23. Personal communication. Rollins-Purle, Inc. to S. Morekas and J. Lehman, Office of Solid Waste Management Programs, and H. Johnson, Office of Research and Monitoring, July 27, 1972.

24. Williamson, P. Processing of industrial wastes at regional treatment facilities. Presented at Open Meeting, American Society of Mechanical Engineers, New York, Sept. 9, 1971. 4 p.

25. Personal communication. General Electric Company to D. Huebner and I. Leighton, EPA Region I, Nov. 20, 1973.

26. Waste control at Dow-Midland. Midland, Mich., Dow Chemical Company. 20 p.

27. Montgomery, M. L., B. G. Cameron, and R. S. Weaver. The thermal destructor; a facility for incineration of chlorinated hydrocarbons. Suffield Report No. 270. Ralston, Alta., Defence Research Establishment, Suffield, Oct. 1971. 14 p.

28. Defence Research Establishment, Suffield. Unpublished data, Nov. 1972.

29. Personal communication. R. S. Weaver, Defence Research Establishment, Suffield, to R. A. Carnes, Solid and Hazardous Waste Research Laboratory, Feb. 13, 1974.

30. M/T Vulcanus-incineration vessel. Rotterdam, Ocean Combustion Service, 1973. 18 p.

31. Composition of chlorinated hydrocarbons presently being burnt in Europe by the M/T "Vulcanus" for a major chemical company. Rotterdam, Ocean Combustion Service, June 14, 1973. 1 p.

32. Babbit, R. P. and J. L. Clure. Report of the development and testing of the Marquardt SUE fume incinerator. Marquardt Report No. S1203. Van Nuys, Calif. Marquardt Company, Jan. 1972. 28 p.

33. Marquardt's SUE incinerator. Van Nuys, Calif., Marquardt Company. 14 p.

34. Personal communication. R. J. Haas, Marquardt Company, to J. Talty, Office of Solid Waste Management Programs, July 6, 1973.

35. Personal communication. R. J. Haas and L. Boyland, Marquardt Company, to Office of Solid Waste Management Programs staff, Jan. 23, 1974.

36. Personal communication. M. I. Kerr, Combustion Power Company, to A. C. Scurlock, Office of Solid Waste Management Programs, Mar. 14, 1974.

37. Ferrell, J. F. Sludge incineration. Pollution Engineering, 5(3):36-39, Mar. 1973.

38. Hescheles, C. A., and S. L. Zeid. Investigation of three systems to dry and incinerate sludge. In Proceedings; 1972 National Incinerator Conference, New York, June 4-7, 1972. New York, American Society of Mechanical Engineers, 1972. p. 265-280.

39. Determining the feasibility of disposing of Air Force liquid wastes in the LSW-500 industrial prototype. Progress Reports Nos. 1, 2, 3, 4, 5. Menlo Park, Calif., Combustion Power Company, Aug. 14, Oct. 22, Nov. 15, Dec. 20, 1973, and Feb. 1, 1974.

40. LSW-liquid and solid waste disposal systems for municipal wastes; engineering report. Menlo Park, Calif., Combustion Power Company. 33 p.

41. Personal communication. R. A. Chapman to N. B. Schomaker, Solid and Hazardous Waste Research Laboratory, Sept. 25, 1973.

42. Personal communication. D. P. Van Buren, Combustion Power Company, to R. Chapman, Solid and Hazardous Waste Research Laboratory, Dec. 14, 1973.

43. Personal communication. M. I. Kerr, Combustion Power Company, to A. C. Scurlock, Office of Solid Waste Management Programs, Nov. 29, 1973.

44. Hydrasposal/fiberclaim. Middletown, Ohio, Black Clawson Company, 1971.

45. Molten salt combustion process for waste disposal. Canoga Park, Calif., Atomics International Division of Rockwell International Inc. 11 p.

46. Personal communication. W. Botts, Atomics International, to A. W. Lindsey, Office of Solid Waste Management Programs, July 10, 1974.

47. Personal communication. J. D. Gylfe, Atomics International, to A. W. Lindsey and A. C. Scurlock, Office of Solid Waste Management Programs, Jan. 11, 1974.

48. The Atomics International molten salt process for special applications. Canoga Park, Calif., Atomics International Division of Rockwell International, Inc., Nov. 16, 1973. 54 p.

49. Packaged waste treatment systems. Sunnyvale, Calif., Biotechnology Division, Lockheed Missiles and Space Company, Inc., 1974. 11 p. (Unpublished report.)

50. Advances in wet oxidation waste treatment systems. Sunnyvale, Calif., Biotechnology Division, Lockheed Missiles and Space Company, Inc. 8 p.

51. Personal communication. T. M. Olcott and B. M. Greenough, Lockheed Missiles and Space Company, Inc., to Office of Solid Waste Management Programs staff, Feb. 7, 1974.

52. Microwave plasms decomposition of toxic wastes. Sunnyvale, Calif., Lockheed Research Laboratory, Lockheed Missiles and Space Company, Inc., 1973. 17 p. (Unpublished report.)

53. Personal Communication. L. Bailin, E. Littauer, R. Simmons, and J. Burback, Lockheed Missiles and Space Company, Inc., to Office of Solid Waste Management Programs staff, Nov. 7, 1973.

54. Personal communication. L. Bailin, E. Littauer, and J. Burback, Lockheed Missiles and Space Company, Inc., to A. C. Scurlock, Office of Solid Waste Management Programs, Nov. 29, 1973.

55. Personal Communication. J. Brewer, Air Correction Division of UOP, to M. Santy, TRW Systems, Mar. 21, 1972.

56. Brewer, G. L. Fume incineration. Chemical Engineering, 75(22): 160-165, Oct. 14, 1968.

57. Direct flame method of incineration for combustible solvents. Air Engineering, 10(4): 32-33, Apr. 1968.

58. Office of Solid Waste Management Programs. Unpublished data.

59. Personal communication. K. Kemp, Kemp Reduction Corporation, to H. Trask, Office of Solid Waste Management Programs, Nov. 11, 1973.

60. Personal Communication. K. Kemp, Kemp Reduction Corporation, to A. C. Scurlock, Office of Solid Waste Management Programs, Jan. 9, 1974.

61. Personal communication. K. Kemp, Kemp Reduction Corporation, to H. Trask, Office of Solid Waste Management Programs, Sept. 11, 1973.

62. Kemp waste converter. Santa Barbara, Calif., Kemp Reduction Corporation. 8 p.

63. Pesticides and containers; acceptance, disposal, and storage; proposed rulemaking and issuance of procedures. Federal Register, 38(99): 13622-13626, May 23, 1973.

64. Stojanovic, B. J., F. L. Shuman, Jr., and M. V. Kennedy. Basic research on equipment and methods for decontamination and disposal of pesticides and pesticide containers; annual report, 23 June 1968 to 23 June 1969. [State College], Mississippi Agricultural Experiment Station, June 1969. 178 p.

65. Stojanovic, B. J., F. L. Shuman, Jr., and M. V. Kennedy. Basic research on equipment and methods for decontamination and disposal of pesticides and pesticide containers; annual report, 23 June 1969 to 23 June 1970. [State College], Mississippi Agricultural and Forestry Experiment Station, June 1970. 125 p.

66. Stojanovic, B. J., F. L. Shuman, Jr., and M. V. Kennedy. Basic research on equipment and methods for decontamination and disposal of pesticides and pesticide containers; final report, June 23, 1967 to June 23, 1970. [State College], Mississippi Agricultural and Forestry Experiment Station, June 1970. 31 p.

67. Technical report on thermal decomposition of orange herbicides. State College, Mississippi Agricultural and Forestry Experiment Station and Plant Science Research Division, U.S. Department of Agriculture, June 1, 1972. 79 p.

68. Putnam, R. C., F. Ellison, R. Protzmann, and J. Hilovsky. Organic pesticides and pesticide containers; a study of their decontamination and combustion. U.S. Environmental Protection Agency, 1971. 175 p. (Distributed by National Technical Information Service, Springfield, Va., as PB-202 202.)

69. Personal communication. R. S. Ottinger, R. Johnson, and C. Shih, TRW Systems Group, to A. C. Scurlock, Office of Solid Waste Management Programs, Jan. 11-14, 1973.

70. U. S. Environmental Protection Agency, Office of Solid Waste Management Programs. Disposal of hazardous wastes; report to Congress. Environmental Protection Publication SW-115. Washington, U. S. Government Printing Office, 1974. 110 p.

71. Personal communication. D. Oberacker, Solid and Hazardous Waste Research Laboratory, to A.C.Scurlock, Office of Solid Waste Management Programs, Jan 8, 1974.

72. Personal communication. D. Oberacker, Solid and Hazardous Waste Research Laboratory, to L. Ferguson, Midwest Research Institute, Jan 9, 1974.

73. Personal communication. D. Oberacker, Solid and Hazardous Waste Research Laboratory, to H. Trask, H. Day, and A. C. Scurlock, Office of Solid Waste Management Programs, Jan 17, 1974.

APPENDIX I

Rotary Kiln

Rotary kiln incinerators have been used at both industrial and municipal installations for disposal of combustible solids, liquids, and gaseous wastes,[1] including obsolete chemical warfare agents and munitions.[2]

While municipal rotary kilns normally handle only solid wastes, industrial kilns are generally designed for both solid and liquid feeds (gaseous disposal is usually of secondary importance).

The rotary kiln is a cylindrical, horizontal, refractory-lined shell which is mounted at a slight incline. Rotation of the shell causes mixing of the waste with the combustion air, thus improving combustion efficiency. The length to diameter ratio of the combustion chamber normally varies between 2/1 and 10/1 and the peripheral speed of rotation is normally in the range of 0.3m to 1.5m (1 to 5 feet) per minute.[3] Combustion temperatures vary according to the characteristics of the material being incinerated but normally range from 810°-1,650°C (1,500°-3,000°F). Residence times vary from several seconds to hours, depending on the waste; gaseous and liquid wastes having the shorter dwell times.

Most rotary kiln installations, particularly those handling hazardous wastes, are equipped with wet scrubber emission controls. Heat recovery equipment is also common. The latter may take the form of heat exchangers to preheat combustion air or of waste heat boilers for steam generation (usually practical only in large installations).

Capital and operating costs of rotary kiln incineration systems vary considerably according to the characteristics and quantities of the wastes being incinerated and the extent of air pollution control equipment. Uninstalled costs of a rotary kiln incinerator are reported to run between \$1,100-2,200/m^3 (\$30-60/ft^3) of kiln,[4] with installation normally equal to 200 percent of these figures.[5] For a small industrial system, such as the one shown in Figure 1, installed cost ranges from (\$2,750 to \$5,500 per daily metric ton (\$2,500 to \$5,000 per daily ton) of feed capacity.[3] Installed costs for large municipal rotary kiln incinerators, including a waste heat boiler, are approximately \$11,000 per metric ton (\$10,000 per daily ton) of feed capacity.[6] Kiln maintenance per year averages 5-10 percent of the total installed cost, though it is largely dependent on refractory life.[7] Total operating costs are scarce.

A variety of small portable rotary kilns are being marketed to handle relatively hazardous feed materials. One such unit is the compact THUMBLE-BURNER which is designed by Bartlett-Snow and which is shown in Figure 1.[8]

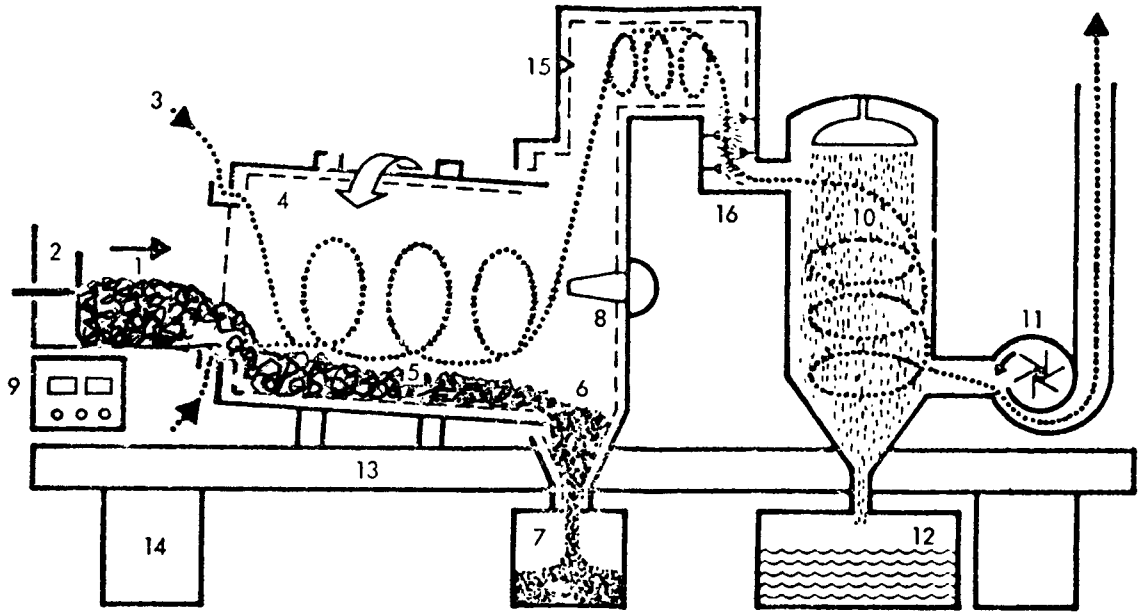

1 WASTE TO INCINERATOR
2 AUTO-CYCLE FEEDING SYSTEM: FEED HOPPER, PNEUMATIC FEEDER, SLIDE GATES
3 COMBUSTION AIR IN
4 REFRACTORY-LINED, ROTATING CYLINDER
5 TUMBLE-BURNING ACTION
6 INCOMBUSTIBLE ASH
7 ASH BIN
8 AUTO-CONTROL PACKAGE: PROGRAMMED PILOT BURNER
9 SELF-COMPENSATING INSTRUMENTATION-CONTROLS
10 WET-SCRUBBER PACKAGE: STAINLESS STEEL, CORROSION-FREE WET SCRUBBER; GAS QUENCH
11 EXHAUST FAN AND STACK
12 RECYCLE WATER, FLY-ASH SLUDGE COLLECTOR
13 SUPPORT FRAME
14 SUPPORT PIERS
15 AFTERBURNER CHAMBER
16 PRECOOLER

Figure 1. Portable Rotary Kiln Incineration Units*

* Bartlett-Snow Co. Thumbleburner, advertising brochure, Bulletin 205B. Cleveland, Ohio, 1970, 6 p. As reported In Ottinger, R. S., Blumenthal, J. L., et al.

These units can handle solid wastes with a 550-8,250 kg.-cal./kg. (1,000 -15,000 BTU/lb.) heating value. Gaseous and liquid waste can be injected into the unit through auxiliary burners. Throughput for these units ranges from 45 kg. (100 pounds) to 1.8 metric tons (2 tons) per hour. The unit can be mounted on a movable skid or truck body.

A typical large rotary kiln industrial facility is operated by Dow Chemical at their Midland, Michigan, plant (see Figure 2).[9,10,11] This incineration system includes four liquid injection-type combustors as well as a 16 million kg.-cal./hr. (65 million BTU/hr.) rotary kiln. The latter disposes of solid waste chemicals, solid refuse, liquid residues, paper, wood, and other solids.

Liquid wastes for incineration are stored in receiving tanks. Those in drums are drained into an agitated holding tank. Before incineration the wastes are strained, then mixed and blended to produce a suitable mixture for burning. Many liquid residues are chlorinated and can contain as high as 50 percent chlorine plus unknown amounts of ash as iron, calcium, magnesium, and sodium oxides and chlorides. Solid wastes consist of tars, plastic sheets, trimmings, strands, powders, plastic foam, paper, boxes, and wood.

In the operation of this rotary kiln, the solid refuse is fed by crane from the dumping pit to the charging hopper. Solid tars in drums are fed into the 4 meter (13 foot) diameter kiln by a hydraulically operated drum and pack feeding mechanism. While solids are being fed, the liquid wastes are fired horizontally into the rotary kiln. The typical rotary kiln temperature is 810°C (1,500°F). Resulting ash from the combustion process, consisting of slag and metallic objects, is water quenched. The gaseous products enter a secondary combustion chamber which permits sufficient dwell time to assure complete combustion. No secondary fuel or afterburners are used. The emission gases then pass through a water spray chamber for fly ash removal, under a stack damper, and out through a 61 meter (200 foot) stack.

Rotary kiln equipment, using the basic Dow design, but modified to accomodate different wastes, is in use by the Minnesota Mining and Manufacturing Corporation at their St. Paul, Minnesota, and Decatur, Alabama, chemical production complexes. Another unit is planned for Eastman Kodak's Rochester, New York, facility. These units are used primarily for incineration of captive industrial wastes and do not routinely accept wastes from outside producers.

Rollins Environmental Services' operation in New Jersey is an example of an incineration facility which accepts solid and liquid chemical wastes in a system composed of a rotary kiln and a liquid injection unit attached

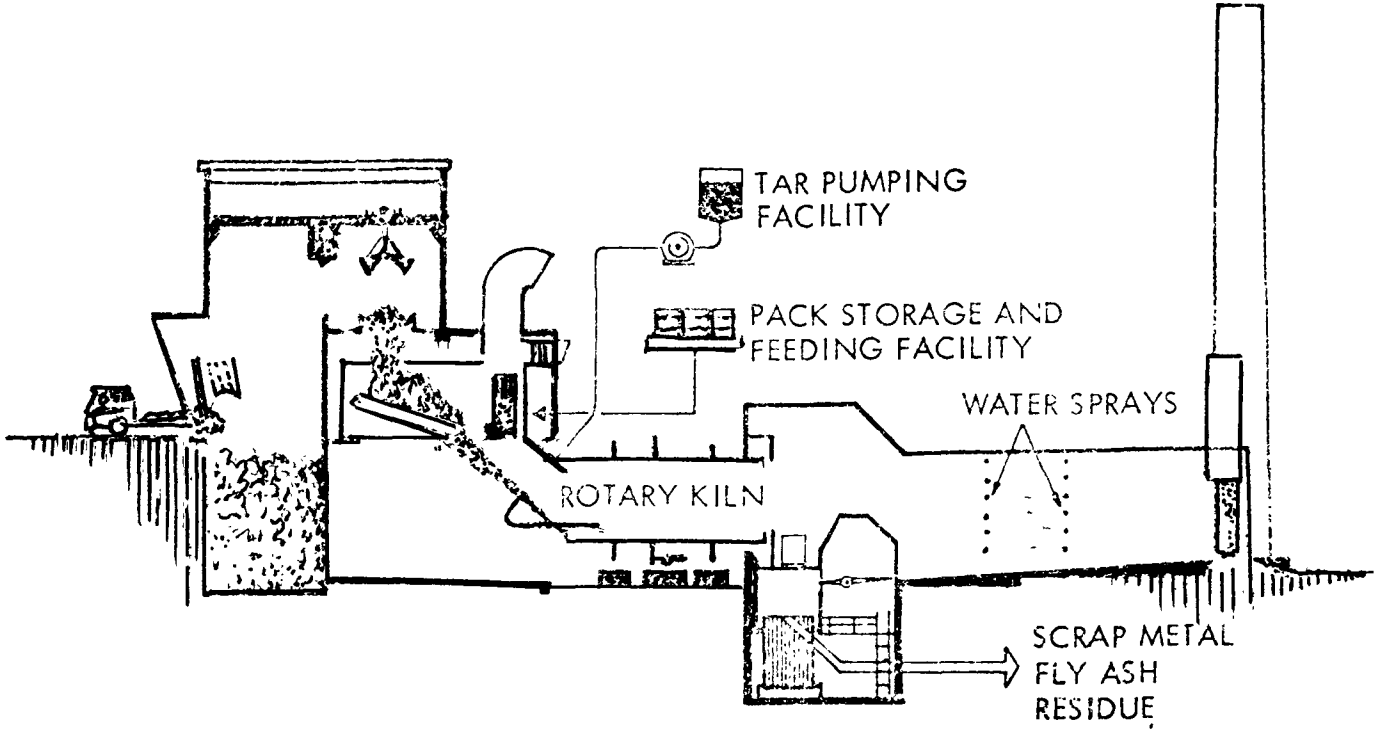

Figure 2. Typical Major Industrial Rotary Kiln Incineration Facility*

* Novak, R. G. Eliminating or disposing of industrial solid wastes. Chemical Engineering, 77(21):79-82, Oct. 5, 1970. As recorded In Ottinger, R. S., Blumenthal, J. L., et al.

to a common afterburner.[12] The rotary kiln feed includes solids such as contaminated paper, fabric, plastics, sludges, slurries, and drums. Operating temperatures of 1,870°C (1900°F) are normal. The combined heat release from both units is 29×10^6 kg.-cal./hr. (115x106 BTU/hr.). Combustion gases pass through an afterburner and a venturi scrubber, which uses an alkaline scrubbing solution. Effluents are pH adjusted and discharged to a settling pond prior to overflow to a three to four day retention pond.

The U.S. Army Materiel Command is currently developing an incineration system based on a rotary kiln for the destruction of explosives and obsolete munitions. This is known as the Chemical Agent Munitions Disposal System.[13] In this system, an automated conveyer feeds wastes into the 7 meter (24 foot) long rotary kiln deactivation furnace. Movement of waste material through the kiln is accomplished by steel screws and is countercurrent to the fuel oil burner flame. The temperature at the feed end is 260°C (500°F), and at the burner end is 650°C (1,200°F). Combustion gases exit through a cyclone for particulate removal. Alternately, the gases may pass through an afterburner for completion of carbon monoxide oxidation, and then through a packed tower scrubber. Caustic soda or soda ash solutions will be recirculated as the scrubbing solution.

REFERENCES

1. Bartlett-Snow Company. Thumbleburner, advertising brochure, Bulletin 205B. Cleveland, Ohio, 1970. 6p.

De Marco, J., D. J. Keller, J. Leckman, and J.L. Newton. Incinerator guidelines - 1969. Public Health Service Publication No. 2012. Rockville, Maryland, Bureau of Solid Waste Management, 1969. 105p.

ITT Research Institute. Utilization of red-mud wastes for lightweight structural building products. Final report prepared for the U.S. Department of the Interior, Bureau of Mines under Contract No. 14-09-0070-382, May 1969. 41p.

Novak, R.G. Eliminating or disposing of industrial solid wastes. Chemical Engineering. 77(21): 79-82, October 5, 1970.

As reported In:

Ottinger, R.S., Blumenthal, J.L., et al (TRW Systems, Inc.). Rotary kiln incinerators. In Disposal process descriptions ultimate disposal, incineration, and pyrolysis processes. In Recommended methods of reduction, neutralization, recovery, or disposal of hazardous wastes. V3. Publication No. PB 224-579. Springfield, Virginia, National Technical Information Service. 249p.

2. Department of the Army, Edgewood Arsenal. Transportable disposal systems, environmental statement. Special Publication, EASP 200-11, July 1971.

Horea, F.I., J. Wichmann, and W.A. Bullerdick. Disposal of waste or excessive high explosives. Progress report, January - March 1972, prepare for the U.S. Atomic Energy Commission, Albuquerque Operations Office by Mason and Hanger. Silas Mason Co., Inc.

TRW internal correspondence. G.I. Gruber to R.S. Ottinger, April 7, 1972. Trip report March 22-24, 1972. (Mason and Hanger, Olin Comapny: Army Materiel Command) Hazardous Waste Disposal.

As reported In:

Ottinger, R.S., Blumenthal, J.L., et al (TRW Systems, Inc.). Rotary kiln incinerators. In Disposal process descriptions ultimate disposal, incineration, and pyrolysis processes. In Recommended methods of reduction, neutralization, recovery, or disposal of hazardous waste. Publication No. PB 224-579. Springfield, Virginia, National Technical Information Service. 249p.

3. Personal communication. E. Dobak, Bartlett-Snow Company, to M. Santy, TRW Systems, May 11, 1972.

As reported In:

Ottinger, R.S., Blumenthal, J.L., et al (TRW Systems, Inc.). Rotary kiln incinerators. In Disposal process descriptions ultimate disposal, incineration, and pyrolysis processes. In Recommended methods of reduction, neutralization, recovery, or disposal of hazardous waste. V3. Publication No. PB 224-579. Springfield, Virginia, National Technical Information Service. 249p.

4. Personal communication. J. Verfurth, Traylor Div., Fuller Co., Compton, California, to J. Land, TRW Systems, December 14, 1971.

Personal communication. E. Dobak, Bartlett-Snow Company to M. Santy, TRW Systems, May 11, 1972.

As reported In:

Ottinger, R.S., Blumenthal, J.L., et al (TRW Systems, Inc.). Rotary kiln incinerators. In Disposal process descriptions ultimate disposal, incineration, and pyrolysis processes. In Recommended methods of reduction, neutralization, recovery, or disposal of hazardous waste. V3. Publication No. PB 224-579. Springfield, Virginia, National Technical Information Service. 249p.

5. Personal communication. J. Verfurth, Traylor Division, Fuller Company, Compton, California, to J. Land, TRW Systems, December 14, 1971.

As reported In:

Ottinger, R.S., Blumenthal, J.L., et al (TRW Systems, Inc.). Rotary kiln incinerators. In Disposal process descriptions ultimate disposal, incineration, and pyrolysis processes. In Recommended methods of reduction, neutralization, recovery, or disposal of hazardous waste. V3. Publication No. PB 224-579. Springfield, Virginia. National Technical Information Service. 249p.

6. Witt, P.A. Jr. Disposal of solid wastes. Chemical Engineering, 78(22) 62-78, October 4, 1971.

As reported In;

Ottinger, R.S., Blumenthal, J.L., et al (TRW Systems, Inc.). Rotary kiln incinerators. In Disposal process descriptions ultimate disposal, incineration, and pyrolysis processes. In Recommended methods of reduction, neutralization, recovery, or disposal of hazardous waste. V3. Publication No. PB 224-579. Springfield, Virginia, National Technical Information Service. 249p.

7. Perry, R.H. Chemical Engineers' Handbook. 3rd Edition. New York, McGraw-Hill Book Company, 1969.

As reported In:

Ottinger, R.S., Blumenthal, J.L., et al (TRW Systems, Inc.). Rotary kiln incinerators. In Disposal process descriptions ultimate disposal, incineration, and pyrolysis processes. In Recommended methods of reduction, neutralization, recovery, or disposal of hazardous waste. V3. Publication No. PB 224-579. Springfield, Virginia, National Technical Information Service. 249p.

8. Bartlett-Snow Company. Thumbleburner, advertising brochure. Bulletin 205B. Cleveland, Ohio, 1970. 6p.

As reported In:

Ottinger, R.S., Blumenthal, J.L., et al (TRW Systems, Inc.). Rotary kiln incinerators. In Disposal process descriptions ultimate disposal, incineration, and pyrolysis processes. In Recommended methods of reduction, neutralization, recovery, or disposal of hazardous wastes. V3. Publication No. PB 224-579. Springfield, Virginia, National Technical Information Service. 249p.

9. Novak, R.G. Eliminating or disposing of industrial solid wastes. Chemical Engineering, 77(21);79-82, October 5, 1970.

As reported In:

Ottinger, R.S., Blumenthal, J.L., et al (TRW Systems, Inc.). Rotary kiln incinerators. In Disposal process descriptions ultimate disposal, incineration, and pyrolysis processes. In Recommended methods of reduction, neutralization, recovery, or disposal of hazardous waste. V3. Publication No. PB 224-579. Springfield, Virginia, National Technical Information Service. 249p.

10. Novak, R.G. (Dow Chemical Company). Industrial solid waste disposal. Presented at Solid Waste Symposium, Solid Waste Section of Environmental Division, National AICHE Meeting, Houston, Texas, Feb. 28-March 4, 1971. 13p.

11. Personal visit. J.P. Lehman, S. Morekas, Office of Solid Waste Management Programs, to R. Novak, Dow Chemical Company, Midland, Michigan, November 1972.

APPENDIX II

Multiple Hearth

Multiple hearth incinerators may be used in the disposal of all forms of combustible waste materials, including sludges, tars, solids, liquids, and gases. Initially, these incinerators were developed to handle sewage sludges but application has now been extended to various types of industrial wastes.

The basic furnace is a refractory-lined circular steel shell with vertically stacked refractory hearths (see Figure 1).[1] Sludges are normally fed to the top hearth, greases and tars through side ports, and liquid and gaseous wastes through auxiliary nozzles.

The rotating central shaft is equipped with horizontal plows which push the waste material across the face of the hearth to the drop holes. The wastes fall through the holes to the next hearth, and so on, until residual ash falls to the furnace floor. Air and combustion products flow countercurrently to the feed from the bottom to the top of the combustion chamber. Gases normally exit at 260°C to 540°C (500°-1000°F) and in most cases pass through emission control devices prior to atmospheric discharge.[1]

When incinerating sewage sludge, the furnace can be divided into three operating zones: the top hearths which serve to dry the feed material to about 48 percent moisture at temperatures from 310°-540°C (600°-1000°F); the incineration/deodorization zone, which has a temperature range of 760°-980°C (1400°-1800°F); and the ash cooling zone from which ash is discharged at about 10 percent of the original feed volume. For sewage sludge, this ash usually contains less than one percent combustible material and is usually land disposed.[1]

Waste characteristics impacting on the operation of the multiple hearth incinerator include moisture content, which is critical because of its effect on thermal load, and calorific value which is affected by the content of volatile and inert materials. These characteristics determine the need for supplementary fuel during operation. Waste combustion characteristics and water content are important along with total waste volume in incinerator sizing.

Costs for multiple hearth incinerators vary significantly depending upon the type and quantity of waste being burned, the sophistication of air and water pollution control equipment, waste pretreatment requirements, construction materials, supplementary fuel needs, and labor. The installed cost for only the incinerator ranges from $55-$495/kg./hr. ($25-$225/lb./hr.).[2,3] Operating costs range from $3.10-$23.80/metric ton ($2.80-21.60/ton

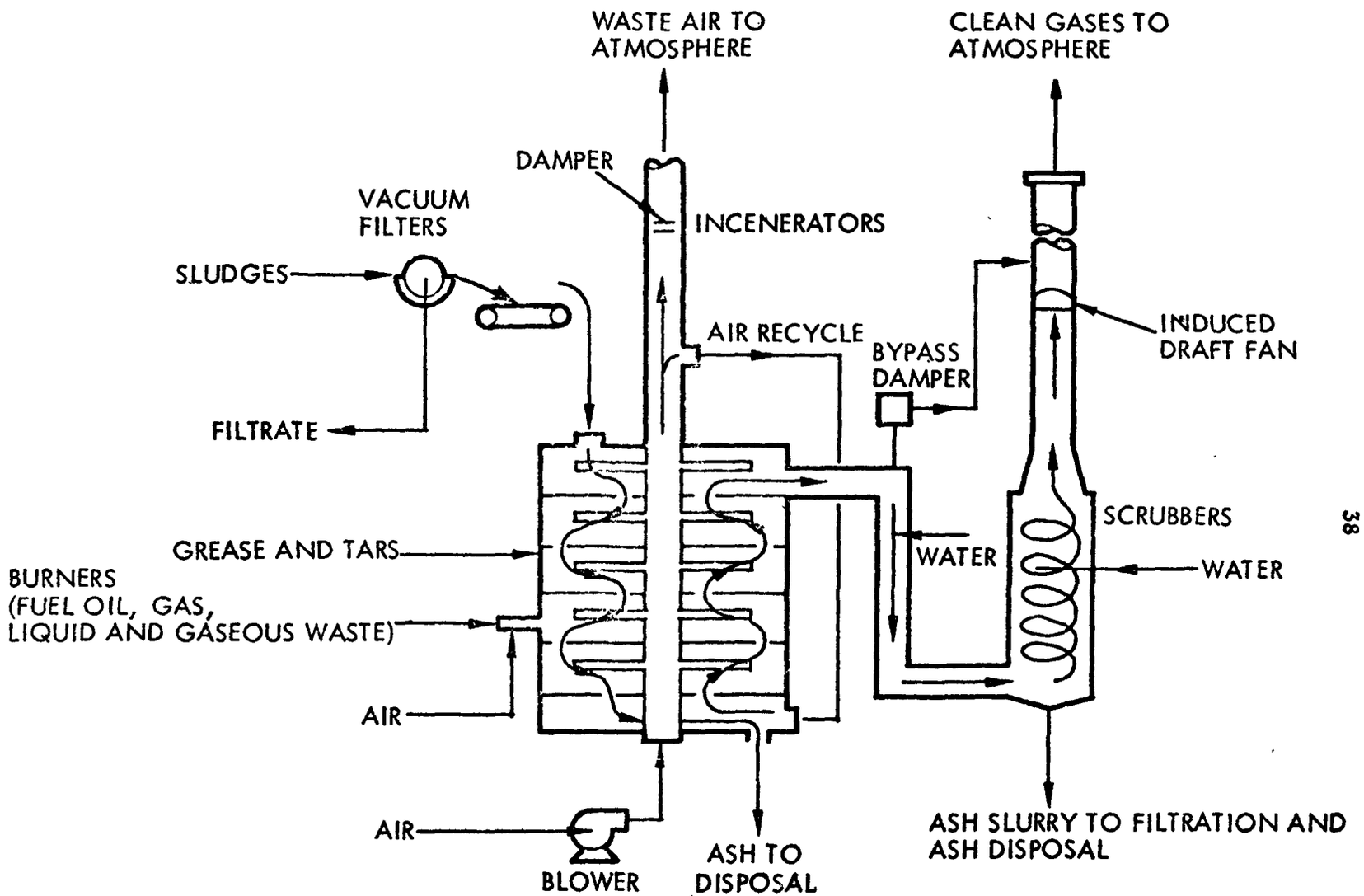

Figure 1. Multiple Hearth Incineration System*

* Sebastian, F. P., and P. J. Cardinal. Solid waste disposal Chemical Engineering, Oct. 14, 1968. p. 112-117. As recorded In Ottinger, R. S., Blumenthal, J. L., et al.

The joint incineration of hazardous wastes and sewage sludge in multiple hearth incinerators has recently been forwarded as a promising concept.[4] In 1972, 25 percent of the total raw sewage sludge generated in the United States was incinerated, and new incinerator installations were expected to average 70 units per year in the 1970's.[5] With this current availability and the expected proliferation of sewage sludge incinerators, the concept, if proven practical, would be applicable to a large number of sites. The Environmental Protection Agency (Office of Programming and Evaluation sponsorship, OSWMP technical guidance) is sponsoring a contract with Versar, Inc., of Springfield, Virginia, to determine the feasibility of this joint incineration concept.

Since the most immediate disposal problems are related to pesticides, the project is concentrating on destruction of DDT (both powder and emulsifiable concentrate) and 2,4,5-T. The project consists of two phases; test burns in a pilot plant facility and test burns in a full scale facility. The pilot multiple hearth incinerator, designed by Envirotech Systems, has six hearths and is equipped with auxiliary fuel firing capabilities. Emission controls include an afterburner and water scrubber (see Figure 2 for the system flow).[7]

Two test burns have been completed at the pilot scale facility in Brisbane, California. Problems shortened the first test burn, but the second test burn went well and was run over a two week period. Two and five percent mixtures of pesticide in sewage sludge (about 20 percent solids) were incinerated at maximum temperatures of 870°C-930°C (1600°-1700°F). The powders were mixed with the sludge prior to injection, whereas liquid sludge mixtures were fed to the third hearth. Stack gas, scrubber, and ash samples were analyzed for undestructed pesticides and breakdown products.[6,7,8,9,10,11] The high destruction ratios found (99.9 percent) led to the scheduling of full-scale tests at the Palo Alto sewage sludge incineration facility for July 1974.

Envirotech has test burned a mixture of polychlorinated biphenyls (PCB's) and sewage sludge in their multiple hearth pilot incinerator. Test results showed over 99.9 percent destruction of the PCB's. The maximum operating temperatures used were 810°-930°C (1500°-1700°F) with an exhaust temperature of 590°C (1100°F).[12] Emission tests by an independent investigator are now scheduled.

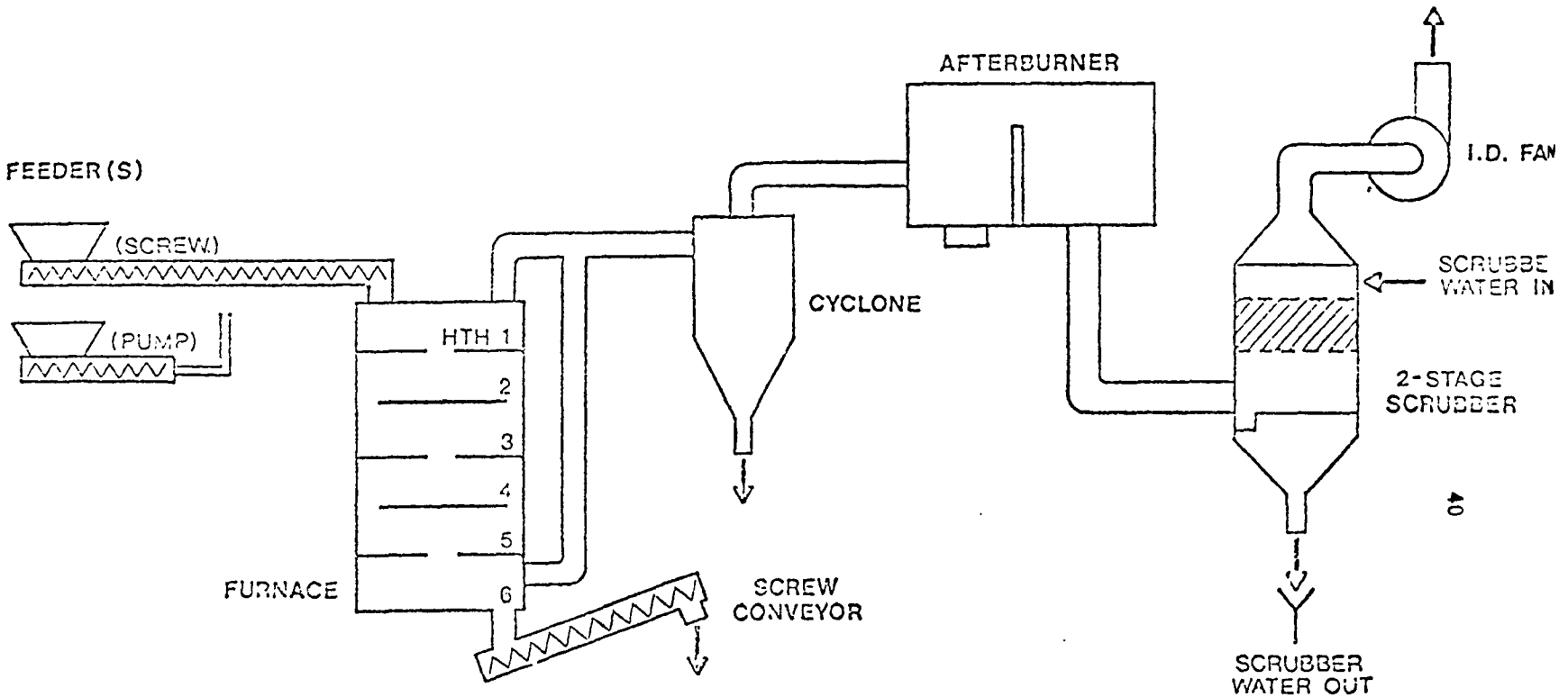

Figure 2. Pilot Furnace System*

* Personal communication. Versar, Inc., Springfield, Virginia, to OSWMP, Washington, D.C. 1973. 3 p.

References

1. Sebastian, F.P., and P.J. Cardinal. Solid waste disposal. Chemical Engineering, October 14, 1968. p.112-117.

As reported In:

Ottinger, R.S., Blumenthal, J.L., et al (TRW Systems, Inc.). Multiple hearth incineration. In Disposal process descriptions ultimate disposal incineration, and pyrolysis processes. In Recommended methods of reduction, neutralization, recovery, or disposal of hazardous waste. V3. Publication No. PB 224-579. Springfield, Virginia, National Technical Information Service. 249p.

2. Personal communication. R. Fox, Envirotech, to A. Scurlock, OSWMP, Washington, D.C., March 5, 1974.

3. Unterberg, W., Sherwood, R.J., and G.R. Schneider. Component costs for multiple-hearth sludge incineration from field data. In Proceedings, 1974 National Incinerator Conference, Miami, Florida, May 12-15, 1974. New York, American Society of Mechanical Engineers, 1974. p.289-309.

4. Personal communication. Versar, Inc., Springfield, Virginia, to OSWMP, Washington, D.C., 1973. 8p.

5. Olexsey, R.A., and J.B. Farrell. Sludge incineration and fuel conservatio News in Environmental Research in Cincinnati, U.S. Environmental Protect Agency, May 3, 1974. 4p.

6. Personal communication. Versar, Inc., Springfield, Virginia, to OSWMP, Washington, D.C. October 24, 1973. 5p.

7. Personal communication. Versar, Inc., Springfield, Virginia, to OSWMP, Washington, D.C., 1973. 3p.

8. Whitmore, F.C., and Durfee, R.L. A study of pesticide disposal in a sewage sludge incineration-first monthly progress report. Springfield, Virginia, Versar, Inc., December 10, 1973. 3p.

9. Whitmore F.D., and Durfee, R.L. A study of pesticide disposal in a sewage sludge incineration-second monthly progress report. Springfield, Virginia, Versar, Inc., January 10, 1974. 3p.

0. Personal communication. T. Carleson, Envirotech, Brisbane, California, to F.C. Whitmore, Versar, Inc., Springfield, Virginia, November 26, 1973.

1. Personal visit. A. Scurlock, OSWMP, to Envirotech, Brisbane, California, November 27-28, 1973. Recorded in trip report from A. Scurlock, OSWMP, to J. P. Lehman, OSWMP, Washington, D.C., December 13, 1973.

12. Private communication. Rollins Environmental Services, Inc., to Office of Solid Waste Management Programs, July 1973.

13. Department of the Army, Edgewood Arsenal. Transportable disposal systems, environmental statement. Special publication. EASP 200-11, July 1971. 297p.

Honea, F.I., J. Wichman, and W.A. Bullerdick. Disposal of waste or excess high explosives. Progress report, January-March 1972, prepared for U.S. Atomic Energy Commission, Albuquerque Operations Office by Mason and Hanger. Silas Mason Company, Inc.

As reported In:

Ottinger, R.S., Blumenthal, J.L., et al. (TRW Systems, Inc.). Nitrocellulose. In Propellants, explosives, chemical warfare. In Recommended methods of reduction, neutralization, recovery, or disposal of hazardous waste. V7. Publication No. PB 224-579. Springfield, Virginia, National Technical Information Service. 249p.

APPENDIX III

Liquid Injection

Liquid injection combustors can be used to dispose of almost all combustible liquid wastes. High viscosity, with the consequent feeding and combustion problems, is the important limiting factor. Liquid injection combustors are of two general types, vertical and horizontal. Table 1 gives an indication of the type of wastes currently burned in liquid combustors. Normal temperatures maintained vary widely; from 650° to 1650°C (1200°-3000°F). A typical temperature is 870°C (1600°F). Residence times also vary, from less than 1/2 second to better than one second. Normal heat release rates approximate 225,000 kg. cal./hr.-m^3 (25,000 BTU/hr.-$ft.^3$), although for special types, such as the vortex combuster, heat release rates as high as 900,000 kg. cal./hr.-m^3 (100,000 BTU/hr.-$ft.^3$) may be reached.[1]

To increase the rate of vaporization and thus of combustion, the liquid wastes are atomized to present a heat transfer surface area as large as possible. Normally this is done when entering the combuster by mechanical means, by internal mixing nozzles, by two phase nozzles, or by pressure nozzles. Droplet size is less than 40 microns (16×10^{-4} inches) in diameter. If viscosity precludes atomization, heating and mixing or other means may be necessary to reduce apparent viscosity. A forced draft must also be supplied to the combustion chamber to provide for the necessary mixing and turbulence.[2]

A typical vertical-fired liquid combustor system is shown in Figure 1. This particular unit is designed and built by the Prenco Division of Pickands Mather and Company. It can be operated at temperatures from 870°-1650°C (1600°-3000°F) and features a short start-up period which permits non-continuous operation. During start-up, an auxiliary burner is used to heat the chamber to the desired temperature. The waste is then fed into the waste air entrainment section and then through the combustion chamber. Additional heated pressurized air is injected near the top of the chamber to create an afterburner effect.

The vortex combustor shown in Figure 2 features a very high heat release rate, 900,000 kg.-cal./hr.-m^3 (100,000 BTU/hr.-$ft.^3$); approximately four times the normal rate.[4] In operation, the ignition chamber is preheated to 430°-540°C (800°-1000°F) for one hour. The liquid waste is fired tangentially by a modified oil burner into the bottom of the ignition chamber. This firing creates a vortex of the hot gas and primary air. This vortex is maintained as it rises through the chamber by tangential injection of secondary air. Normal operating temperatures are 650°-870°C (1200°-1600°F), with 20 percent excess air. In actual operation, the high heat release rates have resulted in some slagging and erosion of

TABLE 1*

LIQUID WASTES CURRENTLY BURNED IN LIQUID WASTE INCINERATION

Separator Sludges
Skimmer Refuse
Oily Waste
Detergent Sludges
Digester Sludges
Cutting Oils
Coolants
Strippers
Phenols
Wine Wastes
Potato Starch
Vegetable Oils
Washer Liquids
Still & Reactor Bottoms
Soap & Detergent Cleaners
Animal Oils & Rendering Fats
Cyanide & Chrome Plating Wastes
Lube Oils
Soluble Oils
Polyester Paint
PVC Paint
Latex Paint
Thinners
Solvents
Polymers
Resins
Cheese Wastes
Dyes
Inks

* Ottinger, R. S., Blumenthal, J. L., et al (TRW Systems, Inc.). Liquid waste combustors. In Disposal process descriptions ultimate disposal, incineration, and pyrolysis processes. In Recommended methods of reduction, neutralization, recovery, or disposal of hazardous waste. V3. Publication No. PB 224-579. Springfield, Virginia, National Technical Information Service. 249 p.

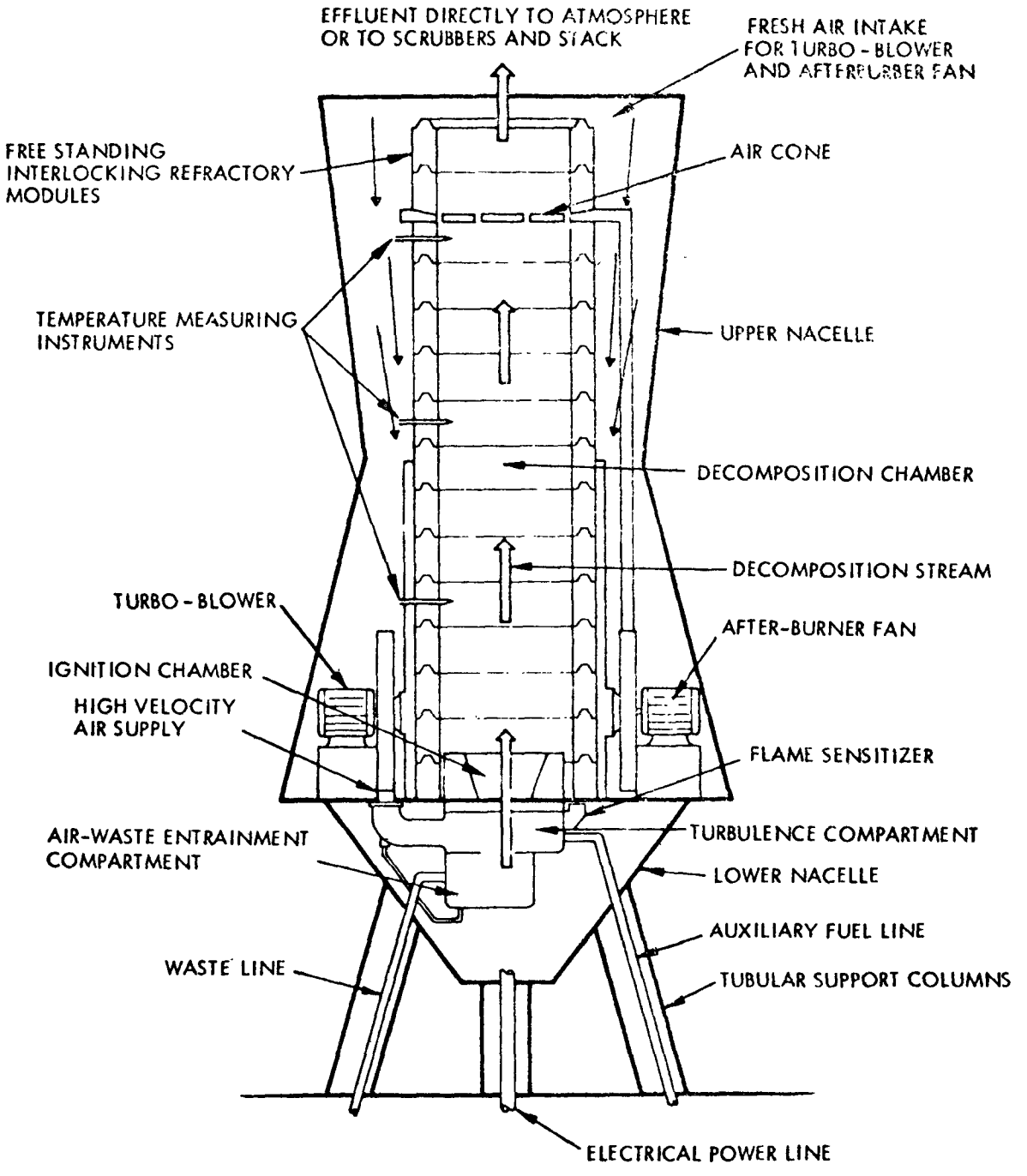

Figure 1: Typical Vertically Fired Liquid Waste Incinerator*

* Prenco. The modern approach to liquid pollution control. Detroit, Michigan, Pickands Mather and Co. 7 p. As recorded In Ottinger, R. S., Blumenthal, J. L. et al.

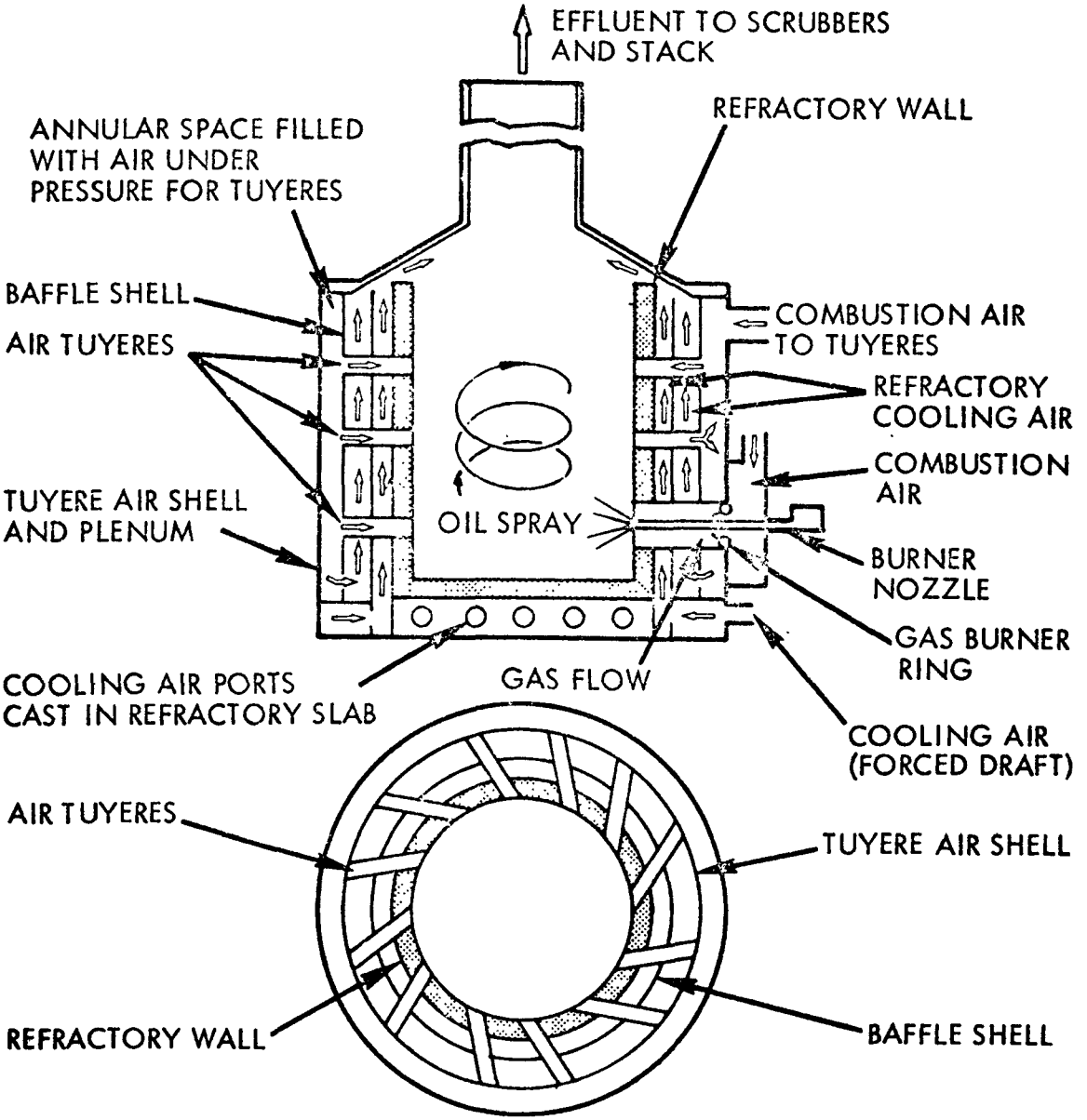

Figure 2: Vortex Liquid Waste Incinerators*

* Lund, H. F. Industrial pollution control handbook. 1
New York, McGraw-Hill Book Co., 1971.
Witt, P.A., Jr. Disposal of solid wastes. Chemical Engineering, 78(22): 62-78, Oct. 4, 1971. As recorde
In Ottinger, R. S., Blumenthal, J. L., et al.

the refractory. Heat recovery may be practiced by using exhaust gases to preheat combustion air, or to generate steam in a waste heat boiler, a method which is generally practical only at large installations.

Two central disposal operations which accept liquid waste for incineration in liquid combustors are Chem-Trol Pollution Services, Inc., of Model City, New York, and Rollins Environmental Services, Inc., of Bridgeport, New Jersey. Chem-Trol's incinerator or "thermal oxidizer" is basically a liquid injection type and is capable of handling slurries up to 20 mesh.[5] Temperatures of up to 1,650°C (3,000°F) can be maintained. Breakdown gases are scrubbed prior to emission. Rollins operates a rotary kiln as well as a liquid injection unit.[6,7] The latter can burn up to 3,800 liters/hour (1,000 gph) of waste material. Operating temperatures of 1,100°-1,200°C (2,000°-2,200°F) can be maintained with dwell times in excess of 2.5 seconds. The two incinerators have a combined heat release of 29×10^6 kg.-cal./hr. (115×10^6 BTU/hr.). Combustion gases pass through a common afterburner and a venturi scrubber which uses an alkaline scrubbing solution. Effluents are pH-adjusted and discharged to a settling pond prior to overflow to a 3-4 day retention pond.

Typical examples of industrial in-house liquid combustor facilities are the General Electric plant at Pittsfield, Massachusetts, and the Dow Chemical plant at Midland, Michigan. General Electric's waste incineration system, which includes a liquid waste combustor and a solid waste retort, was installed in 1972.[2] The liquid combustor was designed by G.E. and fabricated by the John Zink Company of Tulsa, Oklahoma. Liquid storage facilities include six 11,400 liter (3,000 gal.) tanks and three 76,000 liter (20,000 gal.) tanks. Storage capacities are readily expandable by 25 percent within exisiting diking areas. Liquid wastes are atomized by pressurized steam and are fed at the rate of 7.6-11.4 liters (2-3 gallons) per minute into the 10.7 meter (35 foot) long refractory-lined vessel. Temperatures up to 1,650°C (3,000°F) can be maintained, though the usual operating temperature is 850°C (1,600°F). Dwell times range from 1 to 12 seconds. Auxiliary fuels used are restricted to waste oils and chemicals. Gaseous products of combustion are cooled by a surface film evaporation process followed by a series of cooling water sprays. They are then polished by a scrubber packed with polypropylene saddles utilizing recycled plant cooling water as a scrubbing medium. The scrubber bleed, after neutralization treatment, is sent to a 4.9 million liter (1.3 million gallons) per day oil/water separator plant.

The liquid combustor is presently operated at 50 percent capacity with 2.3×10^6 kg. (5×10^6 lb.) being processed annually. G.E. reports no significant NO_x generation at temperatures up to 1,310°C (2,400°F). The only experience with sulfur-containing wastes (2.5 percent by weight) resulted in a pH-control problem; at the time, only 10 percent caustic was being used. The present unit is not equipped to handle dusts and wettable powders unless they are put into solution. EPA's Region I is discussing with G.E. the possibility of test burning approximately 28 barrels of DDT in the summer of 1974, the success of which could lead to the similar destruction of other hazardous materials.

Dow Chemical's incineration system, at the Midland, Michigan, plant includes four liquid combustors and a rotary kiln incinerator.[9,10] The four liquid combustors include a 20.4 million kg.-cal. (81 million BTU/hour) liquid residue incinerator, a 14 million kg.-cal. (56 million BTU)/hour Bigelow Liptak liquid residue incinerator, an 8 million kg.-cal. (32 million BTU/hour) Hooker liquid residue incinerator, and a 16.2 million kg.-cal. (65 million BTU/hour) vertical liquid residue incinerator. The last three are normally used only as spares. Generally only low ash liquid wastes are burned in these units; other materials being burned in the kiln. Residues are fed into the combustion chamber, which is maintained at 980°C (1800°F) by four dual fired nozzles. The combustion gases are quenched in a spray chamber to a temperature of 150°C (300°F) and passed through a high pressure drop venturi scrubber and demister-cooler. About 11,400 liters/minute (3,000 gpm) of water is recycled from the primary tanks of the waste treatment facilities to furnish scrubbing water. This scrubbing water flows back to the waste treatment plant.

The Canadian Government's Defence Research Establishment owns and operates the Thermal Destructor, a liquid combustor, in Ralston, Alberta.[11] It was constructed in 1971 specifically for the destruction of chlorinated hydrocarbons with provisions for expansion to also incinerate sulfur containing compounds.

The Thermal Destructor incinerator, designed by Garver Davis, Inc., of Cleveland, Ohio, has a horizontal cylindrical combustion chamber with a 2.1m (7 foot) diameter and a 4.5m (15 foot) length and has a dual-fired burner (natural gas and the waste feed). A vertical scrubbing tower of 2.1m (7 foot) diameter and 7.9m (26 foot) height with a cooling water flow rate of 910 liters (240 gallons)/ minute is located after the Destructor gas exit. The nominal feed rate of the Destructor is 380 liters (100 gallons)/hour, and the combustion chamber destruction temperature for the 5 percent DDT/kerosene mixture is 900°C (1650°F).[11]

The first objective of this facility was to destruct the 550,000 liters (145,000 gallons) of 5 percent DDT/kerosene solution owned by the Department of National Defence. Continuous burning (24 hours/day, 7 days/week) of this material began late in 1971 and was completed in early 1973. Then approximately 159,000 liters (42,000 gallons) of 5 percent DDT/kerosene solution was destructed for the Federal Department of the Environment. These 5 percent DDT solutions were destructed at the rate of 4,500-5,300 liters (1,2000-1,400 gallons) per day.[12]

Test results for the 5 percent DDT burns showed 99.999 percent to 100 percent destruction of the DDT. Using the lower figure, it has been estimated that less than .065 kg. (2.3 oz.) of DDT escaped undestructed from the total incineration of the 708,000 liters (187,000 gallons), 610 metric tons (670 tons) of DDT/kerosene solution. As a precaution against hazardous operation, destructor effluents and emissions are monitored on a regular basis.[11,13]

After destruction of the 5 percent DDT, small quantities of 24 percent and 30 percent DDT formulation in various solvents and emulsiable concentrates were test destructed. Throughput rates had to be reduced from the 5 percent DDT values because of the escape of some HCl and/or chlorine into the atmosphere. With these test burns the pesticide destruction program was completed.

The Defence Research Establishment has recently undertaken the disposal of over 635 metric tons (700 tons) of mustard gas. It was concluded that direct incineration of the mustard gas was potentially hazardous, so a chemical procedure involving hydrolysis was pioneered. The hydrolysate is fairly innocuous and so last fall test burns of it in the Destructor were performed. Results were encouraging enough that preparation for large-scale destruction is being made. These results showed that HCl generated was 100 percent scrubbed out and the SO_2 generated was 50 percent scrubbed out. A suitable stack is being erected so that exhaust gases will meet Canadian Clean Air Standards.[6,12]

The Hansa Company of Germany has adapted the vertical liquid combustor for use on board a tanker.[14,15] Operating through their shipboard incineration operations subsidiary, the Ocean Combustion Service, they have outfitted a 102 meter (335 foot) long tanker with two incinerators to burn liquid chlorinated wastes.16 This vessel operates out of Rotterdam, Holland, and destroys wastes for Dutch and German chemical companies (including the gaint Bayer complex in Germany). Normally, incineration is carried out 80-96 kilometers (50-60 miles) from the nearest coastline, and the burning details are recorded for government inspection. The vessel has 15 storage tanks with a total capacity of 3.5 million liters (930,000 gallons). There are no emission controls. Hansa reports that the small amounts of ash produced are dispersed as a particulate. Hydrogen chloride and other pollutants are also dispersed. The combined capacity of the two incinerators is about 18 metric tons (20 tons) per hour and a maximum temperature of 1650°C (3000°F) can be maintained. Normal temperature is 1450°C (2450°F). Gas, diesel fuel, or waste oils provide auxiliary fuel. Waste must be liquid and pumpable, but entrained solids up to 5 cm. (2 in.) in length can be accomodated. The claimed advantages of burning at sea include:

1. Environmentally preferable to ocean disposal. Pollutants are dispersed over wide areas, distant from land.

2. The cost of destructing toxic wastes at sea is less than the comparable destruction on land. The cost of destructing chlorinated hydrocarbons at sea is estimated at $61/metric ton ($55/ton). The cost savings over land disposal is due to the absence of any pollution control equipment on the incinerator vessel, and no transporting or landfilling of residues.

Any overall environmental benefit from this method as compared to controlled land incineration is questionable.

TRW Systems, Inc., of Redondo Beach, California, and the Marquardt Company of Van Nuys, California, have adapted burners originally developed for rocket and ramjet applications for use in hazardous material destruction

TRW Systems has developed a liquid injection type incinerator which boasts high destruction efficiencies and short dwell times. A central element injection technique is utilized. In this configuration air is injected as a continuous cylindrical sheet which interacts with the fuel stream, which is injected radially outward. A deflector on the control element contributes to the high degree of mixing attained, which results in a short reaction zone and low NO_x formation, the same claim made for Marquardt's SUE burner. The combustion chamber is followed by an after-burner, a quench chamber, and a packed bed scrubber for hydrogen chloride removal. Several sizes are installed at TRW's laboratory facilities. Commercialization of these burners has not been undertaken.

TRW is test burning 12 different formulations of pesticides for the Army. Test burns have been conducted on 5 percent DDT in oil, 20 percent in oil, 25 percent DDT emulsifiable concentrate, and 15 percent dieldrin solution.[22] Ten to fifteen tests, covering 1-2 weeks, were made on each formulation in a .3m (1 ft.) inside diameter by 2.4m (8 ft.) long burning chamber. Temperatures were maintained at 930°-980°C (1700°-1800°F). In all, twelve different formulations of pesticides will be tested.

In addition to the pesticide work the TRW burner has been used to burn POL wastes, distillate oils, and kerosene. A Japanese firm has now been licensed to produce the burner in Japan for boiler uses.

The SUE (Sudden Expansion) burner was originally developed 14 years ago by the Marquardt Company of Van Nuys, California, as a source of high temperature, high pressure air for testing air-breathing ramjet engines.[23,24,25] Approximately 50 burners have been sold for related purposes with operating temperatures ranging from 540°-3150°C (1000°-5700°F) and pressures from 10,500-1,050,000 kg/m2 (15-1,500 psia).

Several years ago, Marquardt used the SUE concept to develop an incinerator for solvent fumes. As a further extension of this work, the SUE burner was tested as a waste liquid, boron slurry, and waste propellant incinerator and the company reported good results. Marquardt has also developed a high efficiency heat recovery system for off gases. They are currently marketing the SUE burner as a liquid waste disposal system.

The typical SUE burner cross section is shown in Figure 3.[23] The burner consists of an oxidizer inlet pipe connected to a larger diameter combustion chamber by means of a flat plate. Fuel nozzles protrude through the plate spray fuel radially into the inlet oxidizer stream. A poppet fuel nozzle can also be inserted in the oxidizer entrance. Burning begins in the recirculation zone formed by the flat plate and the combustion chamber wall and continues downstream until completed. Total dwell time at temperature is very short, nearly always less than one-half second. Very rapid, complete mixing is thought to be the reason for high destruction efficiencies claimed at the short dwell times. Normally the burning is nearly completed within a combustion chamber lenght of twice the inside chamber diameter. The chamber is uually lengthened to ensure complete combustion and the desired final temperature. The combustion chamber is constructed of 310 stainless steel which is highly oxidation resistant.

In the SUE combustion chamber, a 4.6m (15 ft.) reaction tailpipe follows the 1.2m (4 ft.) SUE incinerator burner section. Combustion gas passes from the reaction tailpipe through a venturi scrubber and stack. Caustic or soda ash solutions are used in the scrubber. Scrubber solution is normally recycled. The installation is equipped with a flame-out automatic feed cutoff to prevent dispersal of incompletely destructed materials in the event of a burner malfunction.

Advantages claimed for the SUE burner include:[26]

1. Low NO_x, CO, hydrocarbon emissions as a result of very rapid and complete combustion.

2. No refractories and thereby lower maintenance costs.

3. Simple and reliable. No secondary air controls. Start-up is simple.

4. Operation possible with a wide variety of fuels and oxidizers.

5. Wide combustion stability limits - the burner has a turndown ratio (maximum heat release rate/mininum heat release rate) as high as 50:1.

Units with nominal diameters of 2.5-76 cm (1-30 in.) have been tested.23 Due to instability in larger units, the 30.5 cm (12 in.) size has been adopted as the most practical and reliable. Nominal fuel input for a 30.5 cm (12 in.) unit is 150 liters (40 gallons) per hour with an air input of .5 to .7 kg (1-1.5 lbs.) per second. To handle greater volumes of waste materials, additional 30.5 cm (12 in.) units are combined in modular fashion. Fuels used have included hydrogen, ethane, propane, fuel oil, chlorinated hydrocarbons, DDT in solution, herbicide orange, and hydrazine. Oxidizers have included air, oxygen, and nitrous oxide.

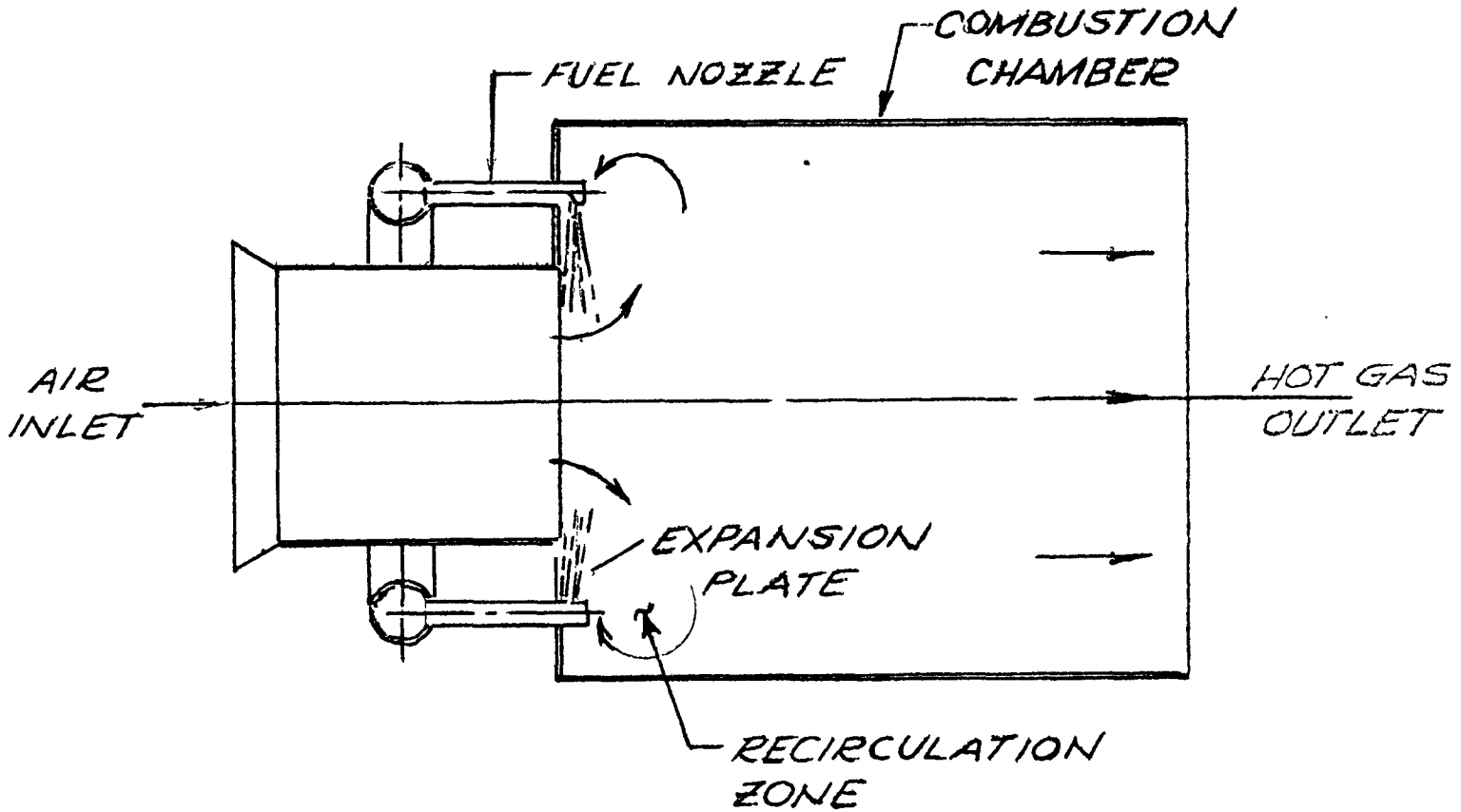

U.S. PATENT NO. 3,074,469

Figure 3: TYPICAL "SUE" BURNER CROSS-SECTION*

* Babbitt, R. P., and J. L. Clure. Report of the development and testing of the Marquardt SUE fume incinerator. Report S 1203. Van Nuys, California, The Marquardt Company, January 1972. 28 p.

Marquardt has incinerated one drum each of 5 percent and 20 percent DDT solution for the Army. Tailpipe exit temperatures were maintained at 1090°C (2000°F) and total residence time amounted to 0.14 seconds. According to the company, chlorinated hydrocarbons were not detectable in the scrubber water (0.5 microgram per liter (4x10-9lb./gal.) detection limit), nor in the combustion gases.

The first herbicide orange tests for the Air Force were performed in 1972 with inconclusive results due to operating problems.[23,27] The second tests were conducted under a $100,000 contract in November and December of 1973 with good results being reported by Marquardt. Twenty-eight 208-liter (55 gal.) drums were destructed. Runs were made at 1090°-1370°C (2000°-2500°F) with no detectable herbicide orange or dioxin content in the scrubber water (detection limit is .5 ppb). However, carbonaceous material did build up on the reactor walls and accumulated in the scrubber water during the 3 to 4 hour runs. These materials tested negative for dioxin but the actual chemical nature was not determined. Iron oxides were detected in the exhaust gases due to the presence of rust in the drums.

Operating and capital costs for liquid combustor installations differ widely, depending on such factors as the volumes and types of waste to be combusted, air pollution control equipment, scrubber water treatment facilities, and the extent to which heat recovery is practiced. The Canadian Defence Research Establishment's Thermal Destructor facility which includes a horizontal combustor and a scrubber was built at a cost of $195,000, including $46,000 for site preparation. This facility has burned 4,500-5,300 liters (1,200-1,400 gal.) of 5 percent DDT daily on a 24-hour basis.[12] The approximate cost of a nominal 150 liter (40 gal.)/hour capacity, .3 meter (12 in.) diameter skid mounted burner with accessory equipment (not including a scrubber) is $35,000.[23] The cost for a stationary 150 liter (40 gal.)/hour SUE incinerator is approximately $30,000.[28] Reported operating costs for liquid combustors range from $.25-65/1,000 liters ($1-$250/1,000 gal.) of waste.[29] The Canadian Government's Thermal Destructor installation has approximate operating costs (including labor, water, electricity, and natural gas) of .05/liter ($.20/gal) for continuous operation.[12] The projected cost of shipboard incineration of chlorinated hydrocarbons in the U.S. is $61/metric ton ($55/ton).[13]

References

1. Ottinger, R.S., Blumenthal, J.L., et al (TRW Systems, Inc.). Liquid combustors. In Disposal process descriptions ultimate disposal, incineration, and pyrolysis processes. In Recommended methods of reduction, neutralization, recovery, or disposal of hazardous waste. V3. Publication No. PB 224-579. Springfield, Virginia, National Technical Information Service. 249p.

2. Ross, R.D. Industrial waste disposal. New York, Van Nostrand Reinhold Book Corporation, 1968. 340p.

As reported In:

Ottinger, R.S., Blumenthal, J.L., et al (TRW Systems, Inc.). Liquid combustors. In Disposal process descriptions ultimate disposal, incineration, and pyrolysis processes. In recommended methods of reduction, neutralization, recovery, or disposal of hazardous waste. V3. Publication No. PB 224-579. Springfield, Virginia, National Technical Information Service. 249p.

3. Prenco. The modern approach to liquid pollution control. Detroit, Michigan, Pickands Mather and Co. 6p.

As reported In:

Ottinger, R.S., Blumenthal, J.L., et al (TRW Systems, Inc.). Liquid combustors. In Disposal process descriptions ultimate disposal, incineration, and pyrolysis processes. In Recommended methods of reduction, neutralization, recovery, or disposal of hazardous waste. V3. Publication No. PB 224-579. Springfield, Virginia, National Technical Information Service. 249p.

4. Lund, H.F. Industrial pollution control handbook. 1 v. New York, McGraw-Hill Book Company, 1971.

Witt, P.A., Jr. Disposal of solid wastes. Chemical Engineering, 78(22): 62-78, October 4, 1971.

As reported In:

Ottinger, R.S., Blumenthal, J.L., et al (TRW Systems, Inc.). Liquid combustors. In Disposal process descriptions ultimate disposal, incineration, and pyrolysis processes. In Recommended methods of reduction, neutralization, recovery or disposal of hazardous waste. V3. Publication No. PB 224-579. Springfield, Virginia, National Technical Information Service. 249p.

5. Wagner, L.E. (Chem-Trol Pollution Services, Inc.) Contract waste disposal. Presented at open meeting. American Society of Mechancial Engineers' Incinerator Division, September 9, 1971. 6p.

6. Personal visit. S. Morekas, J.P. Lehman, OSWMP, and H. Johnson, ORM, to Rollins-Purle Inc., Logan Township, New Jersey, July 27, 1972. Recorded in trip report by S. Morekas, OSWMP, Washington, D.C., August 3, 1972.

7. Williamson, P. (Rollins-Purle, Inc.). Processing of industrial wastes at regional treatment facilities. Presented to the American Society of Mechanical Engineers' Incinerator Division, New York, New York, September 9, 1971. 4p.

8. Personal visit. D. Huebner and I. Leighton, EPA Region I, to General Electric Co., Pittsfield, Massachusetts, November 20, 1973. Recorded in trip report from I. Leighton to S. Colamaris, EPA Region I, Boston, Massachusetts, November 21, 1973.

9. Dow Chemical Company. Waste control at Dow-Midland. 20p.

10. Novak, R.G. (Dow Chemical Co.). Industrial solid waste disposal. Presented at Solid Waste Symposium, Solid Waste Section of Environmental Division, National AICHE Meeting, Houston, Texas, Feb. 28-March 4, 1971. 13p.

11. Montgomery, W.L., B.G. Cameron, and R.J. Weaver. The Thermal Destructor a facility for incineration of chlorinated hydrocarbons. Defence Research Establishment Report No. 270. Suffield, Ontario, Defence Research Establishment, October 1971. 15p.

12. Personal communication. R.S. Weaver, Defence Research Establishment, Suffield, to R.A. Carnes, SHWRL, Cincinnati, Ohio, February 13, 1974.

13. Defence Research Establishment. Summary-test runs. November/1972 -Thermal Destructor. Unpublished data. 1p.

4. Ocean Combustion Service. M/T Vulcanus - incineration vessel. Rotterdam, the Netherlands. 1973. 18p.

5. Personal visit. A.W. Lindsey and A. Scurlock, OSWMP, to D. Carruth and W. Allen, American Eagle Foundation, Washington, D.C., December 1973.

6. Ocean Combustion Service. Composition of chlorinated hydrocarbons presently being vurned in Europe. Unpublished information, June 14, 1973. 1p.

7. American Eagle Foundation. Washington, D.C.

7. Perry, R.H. Chemical Engineers' Handbook. 3rd Edition. New York, McGraw-Hill Book Company, 1969.

As reported In:

Ottinger, R.S., Blumenthal, J.L., et al (TRW Systems, Inc.). Rotary kiln incinerators. In Disposal process descriptions ultimate disposal, incineration, and pyrolysis processes. In Recommended methods of reduction, neutralization, recovery, or disposal of hazardous waste. V3. Publication No. PB 224-579. Springfield, Virginia, National Technical Information Service. 249p.

8. Bartlett-Snow Company. Thumbleburner, advertising brochure. Bulletin 205B. Cleveland, Ohio, 1970. 6p.

As reported In:

Ottinger, R.S., Blumenthal, J.L., et al (TRW Systems, Inc.). Rotary kiln incinerators. In Disposal process descriptions ultimate disposal, incineration, and pyrolysis processes. In Recommended methods of reduction, neutralization, recovery, or disposal of hazardous wastes. V3. Publication No. PB 224-579. Springfield, Virginia, National Technical Information Service. 249p.

9. Novak, R.G. Eliminating or disposing of industrial solid wastes. Chemical Engineering, 77(21);79-82, October 5, 1970.

As reported In:

Ottinger, R.S., Blumenthal, J.L., et al (TRW Systems, Inc.). Rotary kiln incinerators. In Disposal process descriptions ultimate disposal, incineration, and pyrolysis processes. In Recommended methods of reduction, neutralization, recovery, or disposal of hazardous waste. V3. Publication No. PB 224-579. Springfield, Virginia, National Technical Information Service. 249p.

10. Novak, R.G. (Dow Chemical Company). Industrial solid waste disposal. Presented at Solid Waste Symposium, Solid Waste Section of Environmental Division, National AICHE Meeting, Houston, Texas, Feb. 28-March 4, 1971. 13p.

11. Personal visit. J.P. Lehman, S. Morekas, Office of Solid Waste Management Programs, to R. Novak, Dow Chemical Company, Midland, Michigan, November 1972.

18. Personal communication. D. Carruth. American Eagle Foundation, to C.L. Elkins, EPA, December 10, 1973.

19. Personal communication A.B. Early, OSWMP to D. Carruth, American Eagle Foundation, January 31, 1974.

20. Personal communication. G.W. Frick, EPA, to A.B. Early, OSWMP, January 23, 1974.

21. Shih, C.C. Technical brief: characterization of incineration parameters for the safe disposal of pesticides. Redondo Beach, California, TRW Systems Group, 1973. 18p.

22. Personal communication. R.S. Ottinger, R. Johnson, and C.C. Shih, TRW Systems Group, to A. Scurlock, OSWMP, Washington, D.C., January 11-14, 1974.

23. Personal communication. Briefing meeting. R.J. Haas and L. Boyland, Marquardt Co., to OSWMP staff, Washington, D.C., January 22, 1974.

Babbitt, R.P., and J.L. Clure. Report of the development and testing of the Marquardt SUE fume incinerator. Marquardt report S 1203. Van Nuys, California, The Marquardt Company, January 1972. 28p.

24. Marquardt Company, Marquardt total capabilities. Van Nuys, California. The Marquardt Company. 10p.

25. Marquardt Company. Marquardt's SUE incinerator. Van Nuys, California. The Marquardt Co. 14p.

26. Personal communciation. R.J. Haas, Marquardt Co., to J. Talty, OSWMP, Cincinnati, Ohio, July 6, 1973.

27. Babbitt R.P. and J.L. Clure. Report on the feasibility of destroying herbicide orange by incineration using the Marquardt SUE burner. Van Nuys, California, The Marquardt Company, August 1972.

28. Jones, H. R. Environmental control in the organic and petrochemical industries. Park Ridge, New Jersey, Noyes Data Corporation, 1971. 264p.

PCB Retreats Again. Chemical Week, 110(5);14-15, February 2, 1972.

As reported In:

Ottinger, R.S., Blumenthal, J.L., et al (TRW Systems, Inc.). Liquid combustors. In Disposal process descriptions ultimate disposal, incineration, and pyrolysis processes. In Recommended methods of reduction, neutralization, recovery, or disposal of hazardous waste. V3. Publication No. PB 224-579. Springfield, Virginia. National Technical Information Service. 249p.

APPENDIX IV

Fluidized Bed

Fluidized bed incinerators are quite versatile, being usable for the disposal of solid, liquid, and gaseous combustible wastes. The utilization of this process for waste disposal is relatively new, having been in commerical use for only about the last dozen years. At present, the most popular applications are in the petroleum and paper industries, in the processing of nuclear wastes, and in sewage sludge disposal.

The basic fluidized bed combustor is shown in Figure 1.[1] The bed is essentially a vessel containing inert granular particles, such as sand. Blower-driven air enters at the bottom and proceeds vertically through the bed, agitating or "fluidizing" it and causing it to behave in a nature similar to a dense liquid mass. Wastes are injected pneumatically, mechanically, or by gravity into the bed. Rapid and relatively uniform mixing of wastes and bed material occurs.

In the combustion process, heat transfer occurs between the bed materials and the injected waste materials. Typical bed temperatures are in the range of 760°-870°C (1400°-1600°F). Due to the high heat capacity of the bed material the heat content of the fluidized bed is approximately 142,000 kg.-cal./m^3 (16,000 BTU/$ft.^3$), which is about three orders of magnitude greater than the heat capacity of flue gases in typical incinerators operating in the same temperature range.[1] Heat from combustion is transferred back to the bed material. Solid materials remain in the bed until they have become small and light enough to be carried off with the flue gas as a particulate. Collected ash is generally land disposed.

Gas velocity, bed diameter, bed temperature, waste type, and composition are important in designing a fluidized bed incinerator. Due to waste particle size constraints, gas velocities are usually low, around 1.5 to 2.1m (5-7 ft.) per second. With present design technology, bed diameters are limited to 15.3 meters (50 ft.) or less. Bed depths range from 38 centimeters (15 in.) to a few meters. To avoid softening and agglomeration, bed temperatures are restricted to below the material softening point. Certain wastes have to be pre-sized before feeding.[1]

For adequate combustion, pre-drying of wastes may be necessary. The use of recycled combustion gases in such a drying system can recover waste heat, thus reducing auxiliary fuel input and costs. For start-up and for conditioning of the bed, an auxiliary burner system is required.

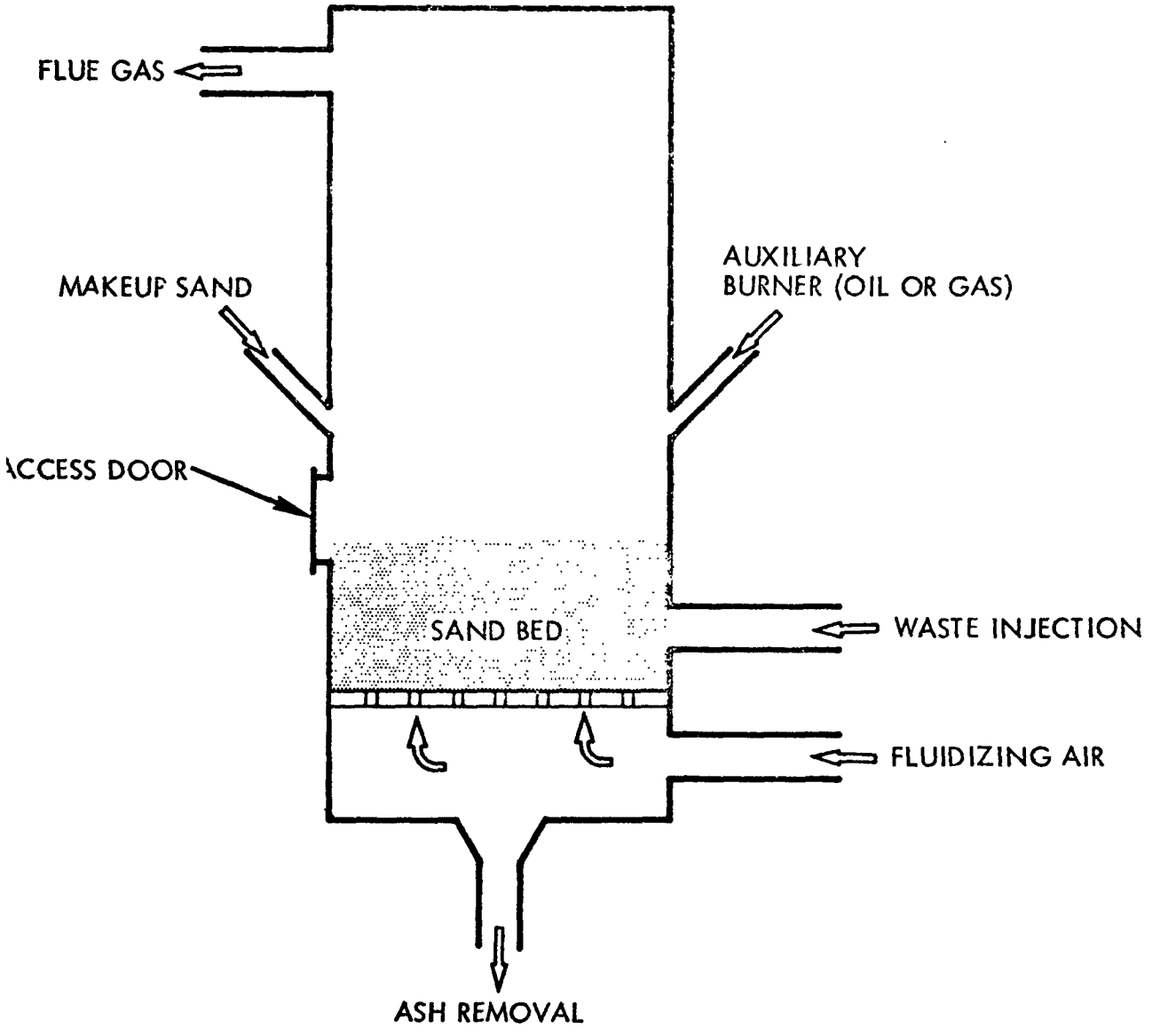

FIGURE 1. Schematic of a Fluidized Bed Combustor*

*ttinger, R. S. Blumenthal, J. L., et al (TRW Systems, Inc.). 'luidized bed incineration. In Disposal process descriptions ltimate disposal, incineration, and pyrolysis processes. In Recommended methods of reduction, neutralization, recovery r disposal of hazardous waste, V3. Publication No. PB 224 579. Springfield, Virginia, National Technical Information Service. 49p.

As with most other incineration techniques, fluidized bed combustion may generate particulate and/or gases which may require air pollution controls prior to emission to the atmosphere. Wet scrubbers, dry collectors, electrostatic precipitators, and fabric filters have proven to be effective in reducing air stream particulates. The method used to control gaseous pollutants will depend upon the particular combustion products. Normally, no odors and little nitrogen oxide is produced from fluidized bed combustion.

Advantages of fluidized bed incineration include:

(1) General applicability for the disposal of combustible solids, liquids, and gaseous wastes;

(2) Simple design concept, requirring no moving parts in the combustion zone;

(3) Compact design due to high heating rate per unit volume (900,000-1,800,000 kg.-cal./hr. m^3 (100,000-200,000 BTU/hr. -ft.^{3})) which results in relatively low capital costs; and

(4) Relatively low gas temperatures and excess air requirements which tend to minimize nitrogen oxide formation and contribute to smaller, lower cost emission control systems.

Disadvantages include:

(1) With present design technology, unit capacity is limited by a maximum bed diameter of about 15m (50 ft.);

(2) A potential problem in removing residual materials from the bed.[1]

The LSW (Liquid and Solid Waste) Disposal System of Combustion Power Company (CPC) is a fluidized bed incinerator which is actively being promoted for the destruction of hazardous wastes. The use of primary and secondary beds with the consequent high fluidizing velocity reportedly provides higher capacity than conventional fluidized beds. Exhaust gas temperatures from the bed do not exceed 810°C (1500°F). The exhaust cleaning system consists of a two stage cyclone for initial particle separation and a CPC-designed dry scrubber. Final exhaust temperature is about 760°C (1400°F), indicating the potential application of thermal recovery.[2,3]

CPC has an LSW system at their Menlo Park, California, facility which was under contract to the Air Force to test burn six common military wastes; herbicide orange, aircraft washrack wastes, paint stripping wastes, and three types of petroleum lubricant wastes.

A three phase test program was set up:

I. Determination of the heating value and chemical composition of the liquid wastes.

II. Incineration of the wastes in a model combustor to determine operating conditions for the test burns in the LSW prototype unit.

III. Verification of phase II operating conditions plus final four hour test burns in the prototype unit.[4]

Project work began in June 1973 and test burns were completed in January 1974. The phase II test for herbicide orange indicated 99.99% destruction of the 2,4-D and 2,4,5,-T normal butyl esters at a bed temperature of 810°C (1500°F). Total herbicide orange input was small (230 and 290 grams (0.51 and 0.64 lbs.), respectively), however, during the phase II burns. Results of testing for the possible presence of dioxin in the emissions are not yet available. Different bed materials were tried to obtain optimal hydrogen chloride suppression and reportedly, a dolomite-sand mixture proved best. A final herbicide orange test burn was conducted in mid-January with sampling by an independent laboratory.[4,5,6]

Extensive research on municipal waste incineration in fluidized beds has been conducted by Dr. Baillie at West Virginia University, including a three year EPA grant program. The fluidized bed incinerator at the Franklin, Ohio, resource recovery plant, partially funded by an EPA grant, burns nonrecoverable municipal organic residues. This 7.6 meter (25 ft.) diameter incinerator was constructed for easy modification to the burning of industrial liquid wastes and sludges.

Capital and operating costs for fluidized beds vary significantly depending on the waste characteristics such as form, heating value, concentration, and the emission control devices. Reported capital costs for fluidized beds burning liquid wastes range from $265-$635/liter/hr. ($1,000-$2,400/gal./hr.) and for fluidized beds burning solid wastes the costs range from $110-$290/kg./hr. ($50-$130/lb./hr.). Projected operating costs for liquids wastes range from $.0025-$.021/liter ($.01-$.08/gallon).[7,8] For sludges an actual cost of $27.50/metirc ton ($25/ton) of dry solids has been reported,[8] and expected costs range from $22-$44/metric ton ($20-$40/ton) of dry solids.[7,8,9]

REFERENCES

1. Ottinger, R.S. Blumenthal, J.L., et al (TRW Systems, Inc.). Fluidized bed incineration. In Disposal process descriptions ultimate disposal, incineration, and pyrolysis processes. In Recommended methods of reduction, neutralization, recovery, or disposal of hazardous waste. Publication No. PB 224-579. Springfield, Virginia, National Technical Service. 249p.

2. Combustion Power Company. LSW - Liquid and solid waste disposal systems for municipal wastes--engineering report. Menlo Park, California, Combustion Power Company. 33p.

3. Personal visit. A.C. Scurlock, OSWMP, to M.I. Kerr, Combustion Power Company, Menlo Park, California, November 29, 1973. Recorded in trip report from A.C. Scurlock, OSWMP, to J.P. Lehman, OSWMP, Washington, D.C., December 13, 1973.

4. Combustion Power Company. Determining the feasibility of disposing of Air Force liquid wastes in the LSW-500 industrial prototypes--progress reports 1,2,3,4 and 5. Menlo Park, California, Combustion Power Company, August 16, October 22, November 15, December 30, 1973, and February 1, 1974.

5. Personal communication. R.A. Chapman, Solid and Hazardous Waste Research Laboratory, Menlo Park, California, to N.B. Schomaker, SHWRL, Cincinnati, Ohio, September 25, 1973.

6. Personal communication. D.P. Van Buren, Combustion Power Company, to R.A. Chapman, SHWRL, Menlo Park, California, December 14, 1973.

7. Personal communication. M.I. Kerr, Combustion Power Company, to A.C. Scurlock, OSWMP, Washington, D.C., March 14, 1974.

8. Ferrel, J.F. Sludge incineration. Pollution Engineering, 36-39, March 1973.

9. Hescheles, C.A., and S.L. Zeid. Investigation of three systems to dry and incinerate sludge. White Plains, N.Y., Malcom Pirnie, Inc. 16p.

APPENDIX V

Molten Salt

Molten salts have long been used in the metallurgical industry to recover metals, especially aluminum. Extensive research has been done on possible applications in nuclear power generation and fuel cells, but none of these were put into actual practice. Recently work has been done on the disposal of gaseous, liquid, and solid wastes by molten salt methods. These methods reportedly have the following advantages for hazardous materials disposal:

(1) reaction of salt with pollutant off-gases such that scrubbing may not be needed;

(2) entrapment of particulates in the salt media; and

(3) rapid and complete destruction of carbonaceous materials in the salt media at lower than normal temperatures.[1]

In addition to waste disposal, the molten salt process has potential application for coal gasification and stack gas desulfurization.

In the basic molten salt concept for waste disposal the waste is injected below the surface of a molten salt bath. Typically, salt composition is 90 percent sodium carbonate and 10 percent sodium sulfate. In the reactor, temperatures are typically maintained at some point in the range 810°-980°C (1500°-1800°F).[1] Lower temperatures can be employed by using a lower melting point salt such as potassium carbonate. Pyrolysis of the feed material occurs first and depending on the oxygen input and the reactor temperature, the pyrolyzed gases may be combusted in the reactor or in a subsequent afterburner. In most cases, combustion is accomplished within the reactor. Sulfur oxides react with the salt to form sodium sulfate, and hydrogen chloride reacts to form sodium chloride. Particulates are entrapped in the salt and the temperatures used minimize NO_x generation. Project developers feel that for most materials no subsequent pollution abatement equipment is necessary. Depending on the circumstances, the spent molten salt may be either regenerated or land disposed. Gas, oil, and coal have been used as an auxiliary fuel.[2]

Atomics International (AI), a division of Rockwell International, has developed the molten salt process for use in waste disposal. In their waste related work to date, they have conducted both laboratory bench scale and pilot plant tests. Four commercial pesticides; chlordane, Weed B Gon, malathion, and Sevin; have been test combusted in a small laboratory molten salt pot which held 6.8 kg. (15 lbs.) of salt. Destruction rates were reported as 99.9 percent plus.[2]

Atomics International completed construction in 1973 of a 0.8 million dollar 90 kg.(200 lb.)/hr. pilot combustor facility which has an approximate one ton salt capacity. Combustor projects and their current status are as follows:

(1) A navy contract to investigate the feasibility of recovery of silver from photographic film has been completed.

(2) One phase of an Office of Naval Research contract has been completed which is investigating the disposal of explosives and propellants; and

(3) An Office of Coal Research contract is currently being performed on coal gasification.[2]

Anti-Pollution Systems, Inc., of New Jersey, in partnership with other firms on specific projects has also done development work on the use of molten salt for waste disposal. A unit has been built which destroys plastic production wastes, reportedly with good efficiency. Under EPA contract, a demonstration unit was constructed to handle the total wastes of a Alaskan Eskimo village. Current activities include the marketing of the sanitary disposal units for small towns and the development of a prototype for paint spraying and solvent drying gas cleanup.[3]

The Battelle Pacific Northwest Laboratories of Richland, Washington, has also developed a molten salt process and have proposed a research program to investigate retention of heavy metals (mercury, lead, cadmium, arsenic, selenium) in the salt bath.[4] At present, conventional incineration of most metallo-organic hazardous materials must be discouraged to preclude excessive heavy metal atmospheric emissions.

Atomics International estimates that a 200 lb./hr. unit with salt regeneration capabilities would cost about $800K installed. Claimed cost advantages include compactness and potential fuel efficiency. Atomics International believes their system is more cost competitive for hazardous material destruction than for less complex problems such as municipal waste disposal. A proposal has been made to the State of California by Atomics International for approximately one-half million dollars for a portable molten salt unit that would dispose of waste pesticide bags. This unit would consist of a truck mounted shredder, a combustor of a 230 kg. (500 lb.)/hr. capacity, and a particle separator device.[5]

REFERENCES

1. Atomics International. The molten salt combustion process for waste disposal. Unpublished information. 11p.

2. Atomic International. The Atomics International molten salt process for special applications. Canoga Park, California, Atomics International, November 16, 1973. 54p.

3. Lessing, L. The salt of the earth joins the war on pollution. Fortune, 88(1): 138-147, July 1973.

4. Personal communication. Proposal. V.L. Hammond, Battelle Northwest, to C. Wiles, Solid Waste Research Laboratory, Cincinnati, Ohio, April 25, 1973.

5. Personal visit. J.D. Gylfe, Atomics International, to A.W. Lindsey and A.C. Scurlock, OSWMP, Environmental Protection Agency, Washington, D.C., January 11, 1974.

APPENDIX VI

Wet Oxidation--Zimmerman Process

Wet oxidation is a physical/chemical treatment process capable of breaking down organic materials via flameless oxidation. The process has probably achieved its greatest success in stablizing sewage sludge and has been applied to reclaiming potable water on NASA spacecraft.[1]

Solids are first solubilized and complex hydrocarbons are broken down via hydrolysis reactions. The relatively simple hydrocarbons are then oxidized to alcohols, aldehydes, acids, and ultimately to carbon dioxide and water. The process is carried out at moderate temperatures, 150°-340°C (300°-650°F), and high pressures 316,000-1,758,000 kgs./m^3 gauge (450-2500 psig), higher than steam pressure at the temperatures being used. Dwell times vary widely, but usually are in the 10 to 30 minute range.[2]

Figure 1 is a flow schematic for the basic system.[3] Wastes entering the system must be readily pumpable, soluble, or water miscible at the temperatures and pressures used. The waste is preheated via a waste heat exchanger and external heaters to the reaction temperature. Hydrolysis occurs during this period. Compressed air is normally used as an oxygen source and the oxidation reaction proceeds in the reactor vessel at the prescribed temperature and pressure. Once the reaction is underway, i.e. after a startup period, it may be self-sustaining, permitting shutdown of the auxiliary heaters. From the reactor, wastes travel through the waste heat exchanger and into a phase separator under atmospheric pressure where gaseous combustion products separate.[1]

The gas phase, ideally, will contain only carbon dioxide, excess oxygen, and nitrogen (from the air). Sulfur, nitrogen, and halogen combustion products will be in the liquid phase as salts. Any ash and undestructed or partially destructed organics will typically also be retained in the liquid phase. Heavy metals are unaffected by the process and exist in the liquid phase as salts.[2]

The reaction rate is affected by temperatures and pressures; higher temperatures and pressures speed the reaction. The addition of nobel metal catalysts also substantially speeds the reaction. Rhodium, ruthenium, iridium, and platinum have been tried; the latter is most effective. Lower pH's also tend to increase reaction rates.[3]

The Zimpro Division of Sterling Drug, Inc., was first to promote the use of the process focusing primarily on sewage sludge stabilization.

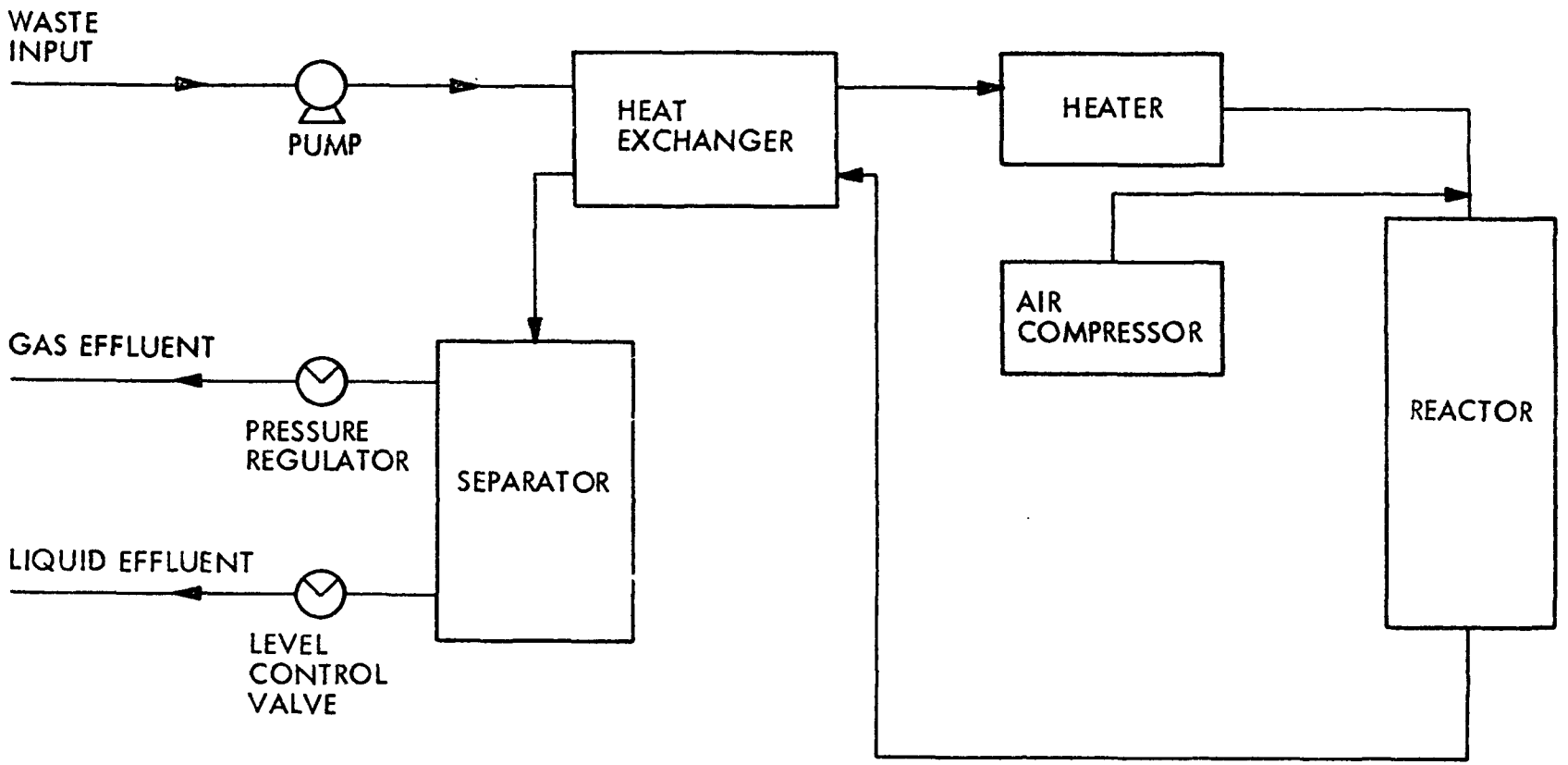

FIGURE 1. WET OXIDATION SYSTEM SCHEMATIC*

*Lockheed Missiles and Space Company, Inc. Packaged waste treatment systems. Unpublished information, 1974.

The Biotechnology Division of the Lockheed Missiles and Space Company, Inc., has done experimental work in the destruction of hazardous organics and other industrial wastes and are actively promoting the concept for certain hazardous wastes. Apparent advantages of the process include:[2]

(1) Sulfur, nitrogen, and halogen end products are retained in the liquid phase eliminating the need for scrubbing emission gases.

(2) Land requirements are small compared to biological treatment processes.

(3) It is applicable to toxic materials which cannot readily be treated biologically.

(4) No oxidizing agents or other chemical additives are required, although noble metals and acids will speed the reaction.

The major disadvantage to the system appears to be relatively low destruction ratios. As measured as a percentage total of organic carbon (TOC) reduction, destruction figures reported by Lockheed have ranged widely, from 17 to 99 percent at pressures of 1,055,000 kg./m^2 gauge (1500 psig) and temperatures of 270°C (550°F) with a 30 minute contact time. TOC however, measures not only residual undestructed wastes, but also organic breakdown products.[2] Lockheed's tests did not include an identification of the residual organics or the residual toxicity. Before the process could be recommended for use with hazardous wastes, the nature of residual organics would have to be determined.

Economic information for hazardous waste treatment has not been well developed. Lockheed reports that treatment costs (capital amortized and operating) are in the range of .03 to .53¢/liter (0.1 to 2.0¢/gal.) Wetted equipment is normally constructed of 310 stainless steel. However, where halogenated wastes are included, it is necessary to go to titanium equipment to withstand corrosion. A stainless steel system capable of handling 75 liters/min. (20 gal./min.) would cost between $200,000 and $300,000. A titanium system would be roughly twice the cost of a stainless steel unit. Power costs are largely associated with the air compressor.[1] Consumption figures are not available but can be expected to be substantial.

REFERENCES

1. Personal visit. Briefing. T.M. Olcott and B.M. Greenough, Biotechnology Division, Lockheed Missiles & Space Company, to OSWMP Staff, Washington, D.C., February 7, 1974.

2. Lockheed Missiles & Space Company. Advances in wet oxidation waste treatment systems. Sunnyvale, California, Biotechnology Division, Lockheed Missiles & Space Company. 8p.

3. Biotechnology Division, Lockheed Missiles & Space Company, Inc. Packaged waste treatment systems. Unpublished information, 1974. 11p.

APPENDIX VII

Plasma Destruction

The Palo Alto, California, research laboratories of Lockheed Missiles and Space Corporation have developed a novel way of potentially destroying toxic materials by injection into a microwave plasma system. In the Lockheed system, microwave energy is applied to excite the molecules of a carrier gas (such as helium or air), thus raising electron energy levels and essentially forming very reactive free radicals. The gas in this high energy condition is called plasma. The excited electrons transfer this energy to break chemical bonds of materials in close proximity. Carbon-carbon bonds are among those most susceptible. Thus, theoretically any organic waste-liquid, solid, or gas-placed into the plasma can be degraded to intermediate or ultimate products, perhaps destroying their toxic properties. Residence time within the plasma varies from 0.1 to 1.0 second.[1]

Work to date has been confined to gaseous materials (though Lockheed believes the concept is applicable to liquids and solids) and has been limited to a laboratory scale unit. Under contract to the Army in 1970, quantities of dimethylmethylphosphonate and diisopropylmethylphosphonate were destructed to determine the feasibility of using such a process for the destruction of nerve gas laden air. Phosphonate conversions ranging from 94.7 to 99.5 percent were achieved.[1]

Lockheed believes the process is especially suited to destruction of chemical warfare agents, organophosphorus agents, and pesticides. Through choosing the composition of carrier and oxidant gases the company believes that decomposition can be controlled so as to limit it at any intermediate breakdown product desired. The recovering of usable breakdown products appears possible. The company is attempting to obtain funding to continue research on a new, larger reaction chamber.[2,3] Advantages claimed for plasma decomposition include:

(1) Low operating temperatures - cold discharges; 150°C (300°F);

(2) Low cost-22¢/kg. (10¢/lb.) for electricity, about $10,000 capital cost for an installed small unit; and

(3) Small size, potential portability.[1]

REFERENCES

1. Lockheed Research Laboratory, Lockheed Missile & Space Company. Microwave plasma decomposition of toxic wastes. Unpublished information, 1973. 17p.

2. Personal visit. Briefing. L. Bailin, E. Littauer, R. Simmons, J. Burbach, Lockheed Missiles & Space Company, to OSWMP Staff, Washington, D.C., November 17, 1973. Recorded in meeting report by A.C. Scurlock, OSWMP, Washington, D.C., January 9, 1974.

3. Personal visit. A.C. Scurlock, OSWMP, Washington, D.C., to L. Bailin, E. Littauer, J. Burbach, Lockheed Palo Alto Research Laboratories, Lockheed Missiles & Space Company, Palo Alto, California, November 29, 1973. Recorded in trip report by A.C. Scurlock, OSWMP, Washington, D.C., December 13, 1973.

4. Lockheed Research Laboratory, Lockheed Missiles & Space Company. Microwave plasma decomposition of toxic wastes. Unpublished information, 1973. 17p.

APPENDIX VIII

Multiple Chamber

The multiple chamber incinerator is widely used for combusting municipal and industrial solid wastes, including paper, wood, refuse, phenolic resins, rubber, wire coatings, acrylic resins, epoxy resins, and PVC. Though for applicable solid wastes the multiple chamber design does offer the advantage of relative simplicity and ease of operation; the inability of the basic design to handle liquids, sludges, slurries, powders, and tars precludes its use for processing most hazardous wastes. It is likely that most new hazardous waste incinerators will be of the more universally applicable incinerator designs such as the multiple hearth, fluidized bed, or rotary kiln types.

A typical multiple chamber incinerator consists of three separate chambers (see Figure 1); an ignition chamber, a mixing chamber, and a secondary combustion chamber. The solid wastes are charged to the grates in the ignition chamber where drying occurs and combustion begins. From the ignition chamber the gases travel to the mixing chamber. Mixing occurs here due to: (1) abrupt changes in direction entering and leaving the chamber, (2) sudden expansion and contraction of ducts and chambers, and (3) addition of 20 percent of the air makeup within the chamber. From this chamber the gases enter the secondary combustion chamber in which combustion is completed. Ash is removed from ports within each chamber and emission scrubbing systems are necessary. Approximately 200 percent excess air is normal, with 80 percent of it added to the ignition chamber.[1]

When the input waste is less then 10 percent mositure, auxiliary burners are generally not needed. Moisture content from 10 to 20 percent usually requires auxiliary burners in the mixing chamber burners, while moisture contents greater than 20 percent often require additional ignition chamber burners.

The average temperature of the combustion products, 540°C (1000°F), is not high enough to ensure complete destruction of many hazardous materials. Higher temperatures could be maintained by additional auxiliary burners and proper construction materials.

As with most incinerator installations, there appears to be an economy of scale factor involved in costs. Typical multiple chamber incinerator and scrubber installation costs (1968 dollars) exclusive of foundation costs are as follows:

Capacity Kg./hr. (lb./hr.)	Incinerator Costs ($)	Scrubber Costs ($)
45 (100)	1,700	3,000
225 (500)	5,000	6,200
450 (1,000)	12,000	8,800
900 (2,000)	25,000	13,200

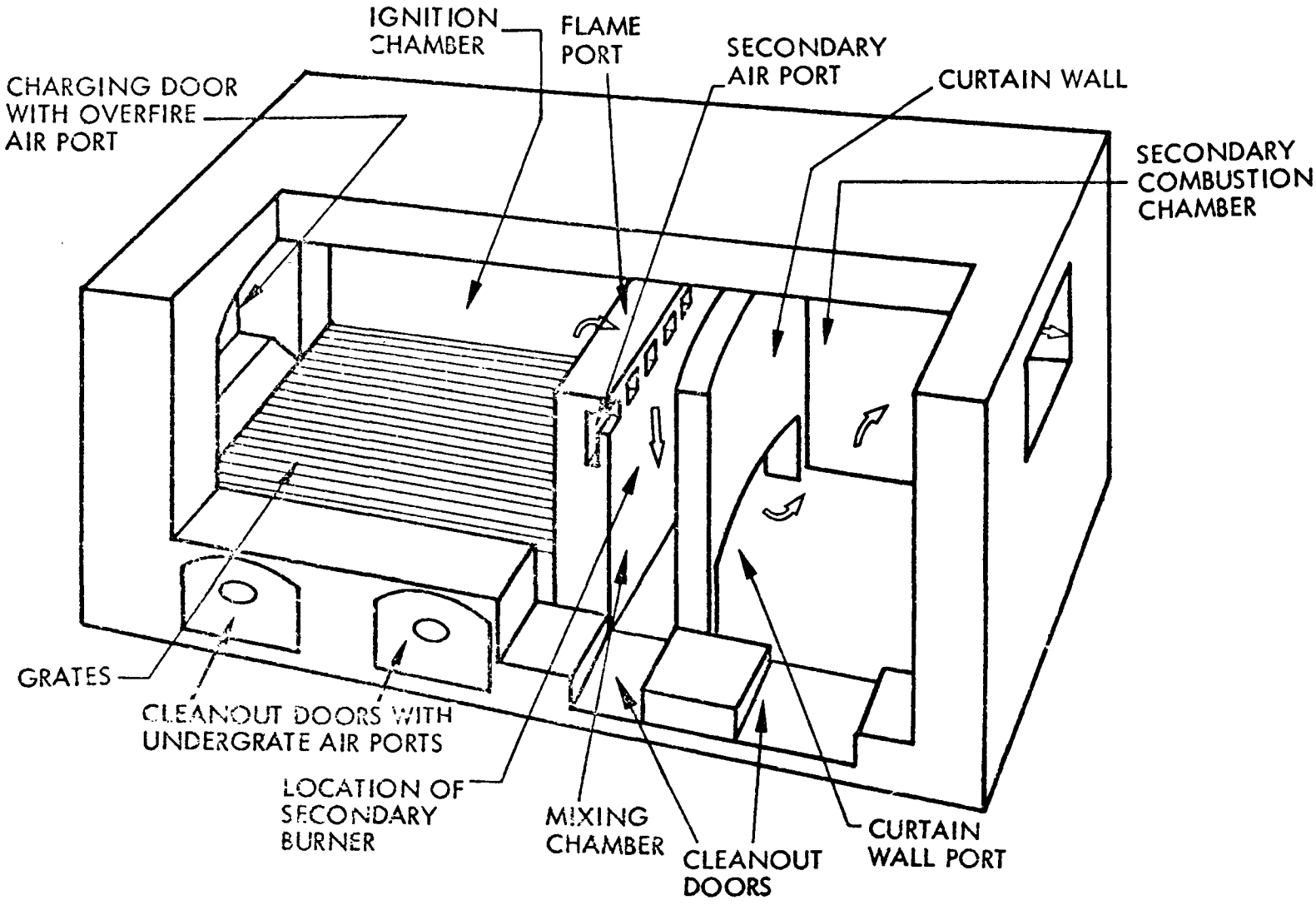

FIGURE 1: Multiple Chamber Incinerator*

* Danielson, J. A. (Air Pollution Control District, County of Los Angeles). Air pollution engineering manual. Washington, D.C., U. S. Government Printing Office, 1967. 892p. As recorded In Ottinger, R. S. Blumenthal, J. L., et al.

Total processing costs reportedly are in the range of $16 to $18/metric ton ($15 to $16/ton) of waste incinerated.[1] This includes capital and operating costs.

REFERENCES

1. Ottinger, R.S. Blumenthal, J.L., et al (TRW Systems, Inc.). Multiple chamber incinerators. In Disposal process descriptions ultimate disposal, incineration, and pyrolysis processes. In Recommended methods of reduction, neutralization, recovery, disposal of hazardous waste. V3. Publication No. PB 224 579. Springfield, Virginia, National Technical Information Service. 249p.

APPENDIX IX

Gas Combustion

There are a number of types of incinerators or burners used to combust gaseous materials. They are used to purify contaminated gas streams by either direct combustion or with the aid of auxiliary burners. They are also potentially applicable to incineration of volatile liquids, such as solvents.

There are three basic types of gas incinerators: flare, direct flame, and catalytic oxidation types. Flares consist of a pipe equipped with a flame attachment and an automatic pilot. Readily flammable waste gases are simply flared to the open atmosphere. Flares are generally used for disposal of large quantities of combustible gases and aerosols and have found application primarily in petroleum refining and petrochemical operations. Flares are generally not environmentally satisfactory for disposal of hazardous gases since uncombusted wastes and breakdown products such as chlorides, flourides, cyanides, and sulfur compounds are simply emitted.

The direct flame thermal incinerator (see Figure 1) is used for the disposal of low concentration (usually less than 25 percent of the lower flammability limit) combustible gaseous waste. In the combustion chamber the contaminated gases are completely mixed with the flames and burner combustion gases to ensure good combustion. The gaseous contaminants are destroyed at temperatures ranging from 450°-810°C (850°-1500°F).[1,2,3]

Low concentration combustible gases (usually at or below 25 percent of the lower flammability limit) may also be disposed of through the use of catalytic incinerators. Catalytic combustion, or catalytic oxidation, has been used to destroy paint solvents and odors from chemical manufacturing and food processing. In catalytic incineration operation, the waste gases are preheated before exposure to the catalyst, usually to about 320°-540°C (600°-1000°F) (see Figure 2). Most of the combustion occurs during flow through the catalyst bed which operates at maximum temperatures of 810°-870°C (1500°-1600°F). Maintaining increased temperatures in the catalyst bed generally results in increased destruction efficiency. The ability to carry out combustion at relatively low temperatures while achieving high destruction efficiencies is a major advantage of the catalytic incinerator. Representative sizes for catalytic units including heater and catalyst sections are as follows:

Flow Rate	Length		Maximum Outside Diameter	
SCMH (SCFH)	mm	(ft.)	mm	(ft.)
500 (18,000)	2500	(8.2)	600	(2)
6000 (216,000)	3500	(11.5)	1400-2000	(4.6-6.6)

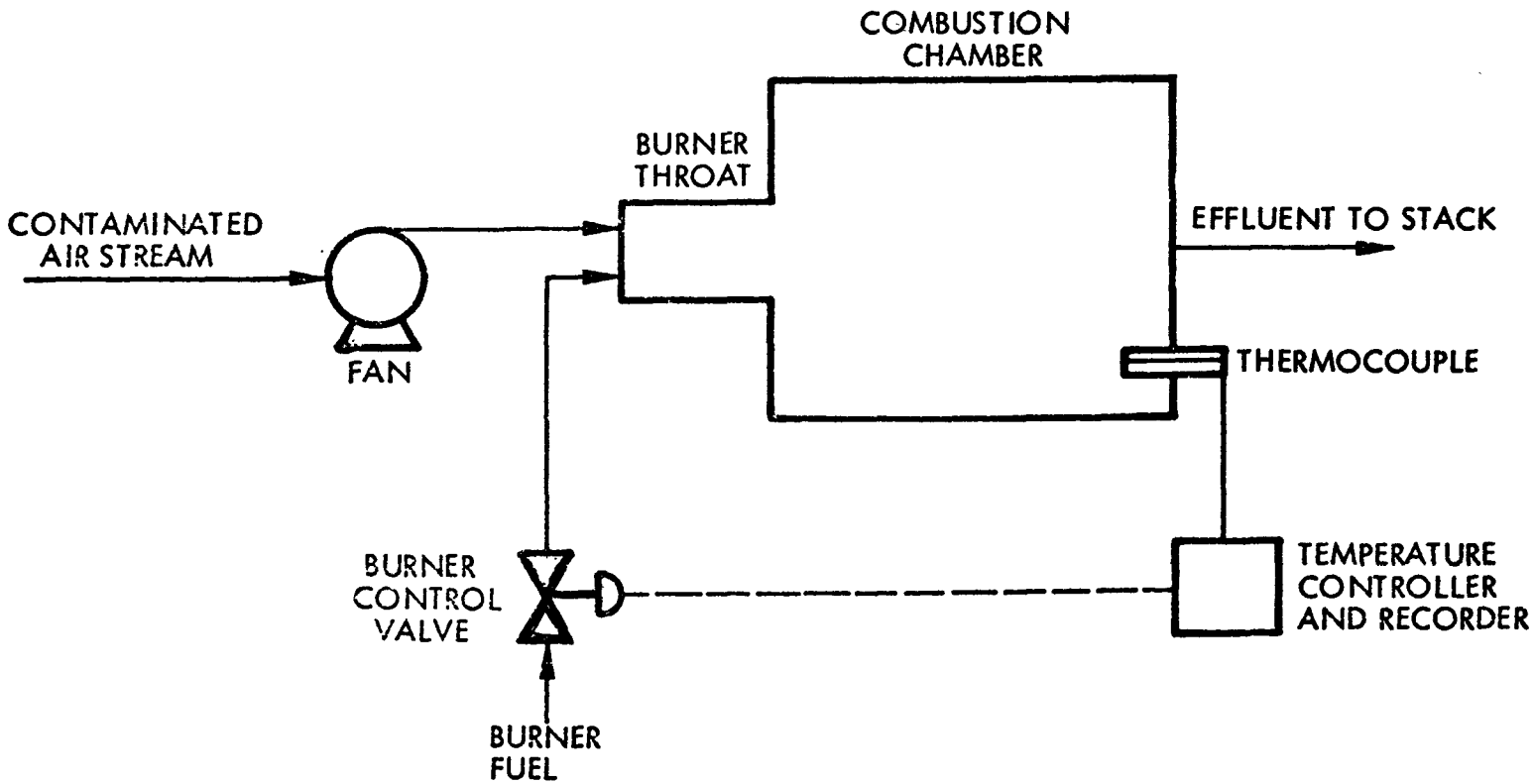

Figure 1: Direct-Flame Thermal Incinerator*

*Danielson, J. A. (Air Pollution Control District, County of Los Angeles). Air pollution engineering manual. Washington, D.C., U.S. Government Printing Office, 1967. 892p. As recorded In Ottinger, R. S., Blumenthal, J. L., et al.

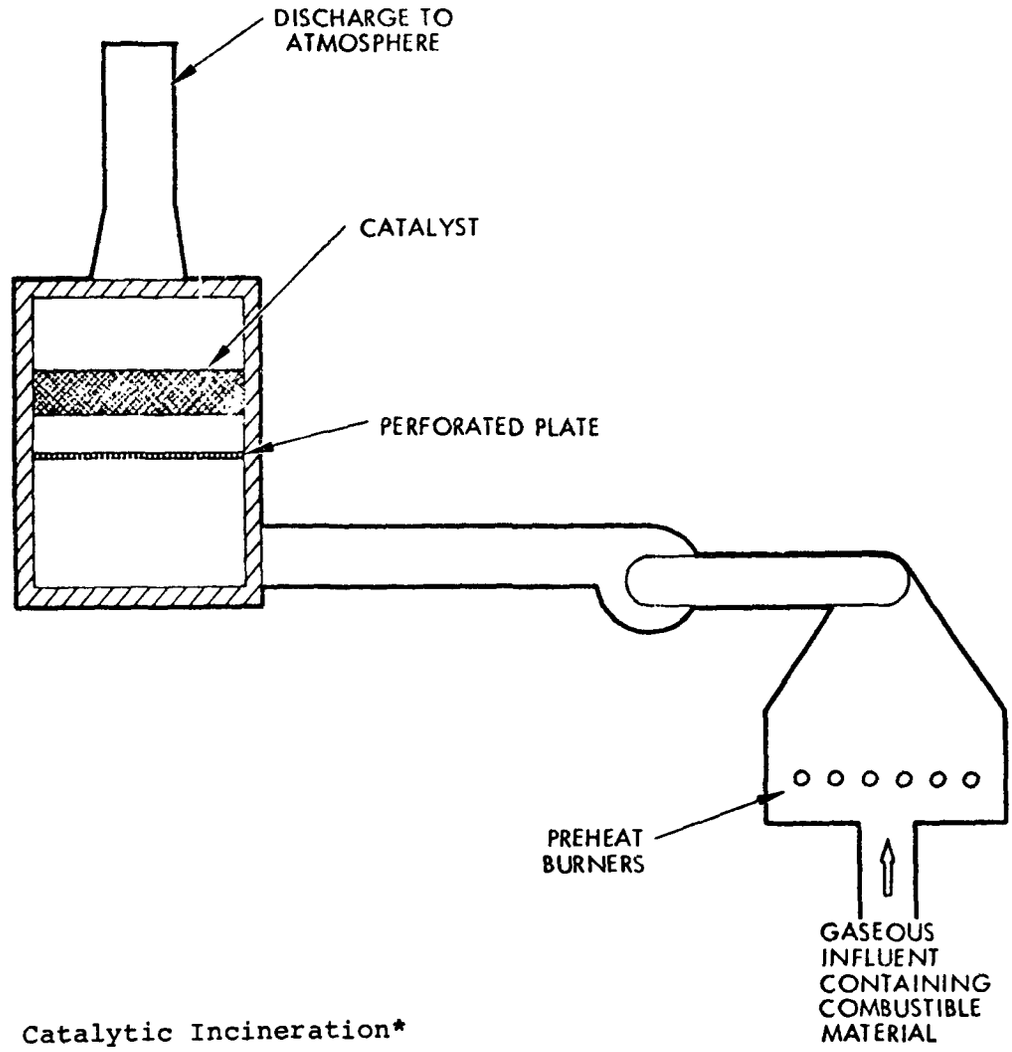

Figure 2: Catalytic Incineration*

*Danielson, J. A. (Air pollution Control District, County of Los Angeles). Air pollution engineering manual. Washington, D.C., U.S. Government Printing Office, 1967. 892p. As recorded In Ottinger, R. S., Blumenthal, J. L., et al.

Sufficient oxygen supply and retention time are important in the catalyst section. Platinum, palladium, rhodium, copper chromite, and the oxides of copper, chromium, manganese, nickel, and cobalt have been successfully used as catalysts. Fouling and erosion of the catalyst surface present a constant maintenance problem. Additionally, certain chemicals in the gaseous stream may act to poison the catalyst, thereby reducing or eliminating its effectiveness.

Since the choice of catalyst and the necessary design parameters of the system depend heavily on the waste gas characteristics (chemical nature and concentration), extreme care must be taken in designing individual catalytic incinerators if satisfactory destruction efficiencies are to be achieved.

Capital costs for gas combustors vary significantly depending on the complexity of the overall system and the type and quantity of waste gas. Typical capital costs are shown by the following:

Flares- [1,2,5,6]		\$0.22-\$22.00/scmm (\$.006-\$.60/scfm)
Direct-Flame- [7]	a) Without heat exchanger	\$54.00-\$71.00/scmm (\$1.50-\$2.00/scfm)
	b) With heat exchanger	\$71.00-\$167.00/scmm (\$2.00-\$4.50/scfm)
Catalytic- [8]	a) (140 scmm) unit without heat exchanger	\$107/scmm (\$3/scfm)
	b) (280 scmm) unit without heat exchanger	\$71-\$89/scmm (\$2.00-\$2.50/scfm)
	c) (280 scmm) unit with heat exchanger	\$100.00-\$161.00/scmm (\$2.80-\$4.50/scfm)

Some representative flare costs for various production plants are \$250,000 for a 27,000 metric ton (30,000 ton)/year synthetic rubber plant and \$5,000 for a 600,000 m^3 (20 million $ft.^3$) per day natural gas production plant.[9] Operating costs for most gas combustors are scarce. Operating costs for direct-flame incineration are reported to be \$3.07-\$3.78/100scmm (\$.86-\$1.06/1000 scfm) with heat recovery providing savings up to 30 percent in some situations.[10]

REFERENCES

1. Danielson, J.A. (Air Pollution Control District, County of Los Angeles). Air Pollution engineering manual. Washington, D.C., U.S. Government Printing Office, 1967. 892p.

As recorded In

Ottinger, R.S., Blumenthal, J.L., et al (TRW Systems, Inc.). Gas combustors. In Disposal process descriptions ultimate disposal, incineration, and pyrolysis processes. In Recommended methods of reduction, neturalization, recovery, or disposal of hazardous waste. V3. Publication No. PB 224 579. Springfield, Virginia, National Technical Information Service. 249p.

2. Brewer, G.L. Fume incineration. Chemical Engineering, October 14, 1968.

As recorded In

Ottinger, R.S., Blumenthal, J.L., et al (TRW Systems, Inc.). Gas combustors. In Disposal process descriptions ultimate disposal, incineration, and pyrolysis processes. In Recommended methods of reduction, neutralization, recovery, or disposal of hazardous waste. V3. Publication No. PB 224 579. Springfield, Virginia, National Technical Information Service. 249p.

3. Pauletta, C. Incineration. In Pollution Engineering, March/April 1970. pI.

As recorded In

Ottinger, R.S., Blumenthal, J.L., et al (TRW Systems, Inc.). Gas combustors. In Disposal process descriptions ultimate disposal, incineration, and pyrolysis processes. In Recommended methods of reduction, neutralization, recovery, or disposal of hazardous waste. V3. Publication No. PB 224 579. Springfield, Virginia, National Technical Information Service. 249p.

4. Volvo Flygmotor. Gas emission control. Trollhattan, Sweden. Volvo Flygmotor.

5. Personal communication. J. Feldstine, Hirt Combustion Engineers, to M. Santy, TRW Systems, March 21, 1972.

As recorded In

Ottinger, R.S.., Blumenthal, J.L., et al (TRW Systems, Inc.). Flares. In Disposal process descriptions ultimate disposal, incineration, and pyrolysis processes. In Recommended methods of reduction, neutralization, recovery, or disposal of hazardous waste. V3. Publication No. PB 224 579. Springfield, Virginia, National Technical Information Service. 249p.

6. Personal communication. C. Cantrel, John Zink Co., to M. Santy, TRW Systems. March 21, 1972.

As recorded In

Ottinger, R.S., Blumenthal, J.L., et al (TRW Systems, Inc.). Flares. In Disposal process descriptions ultimate disposal, incineration, and pyrolysis processes. In Recommended methods of reduction, neutralization, recovery, or disposal of hazardous waste. V3. Publication No. PB 224 579. Springfield, Virginia, National Technical Information Service. 249p.

7. Ottinger, R.S., Blumenthal, J.L., et al (TRW Systems, Inc.). Gas combustors. In Disposal process descriptions ultimate disposal, incineration, and pyrolysis processes. In Recommended methods of reduction, neutralization, recovery, or disposal of hazardous waste. V3. Publication No. PB 224 579. Springfield, Virginia, National Technical Information Service. 249p.

8. Ottinger, R.S., Blumenthal, J.L., et al (TRW Systems, Inc.). Catalytic incineration. In Disposal process descriptions ultimate disposal, incineration, and pyrolysis processes. In Recommended methods of reduction, neutralization, recovery, or disposal of hazardous waste. V3. Publication No. PB 224 579. Springfield, Virginia, National Technical Information Service. 249p.

9. Stone, R. and H. Smallwood. Intermedia aspects of air and water pollution control. EPA Publication No. 600/5-73-003. Washington, D.C., U.S. Government Printing Office, August 1973.

10. Direct flame method of incineration for combustibe solvents. Air Engineering, 10(4): 32-33, April 1968.

As recorded In

Ottinger, R.S., Blumenthal, J.L., et al (TRW Systems, Inc.) Flares. In Disposal process descriptions ultimte disposal, incineration, and pyrolysis processes. In Recommended methods of reduction, neutralization, recovery, or disposal of hazardous waste. V3. Publication No. PB 224 579. Springfield, Virginia, National Technical Information Service. 249p.

APPENDIX X

Pyrolysis

Pyrolysis is the thermal decomposition of organic material into solid, liquid, and gaseous constituents, the amounts of each depending on the initial waste and operating conditions. Organic waste placed inside a pyrolytic reactor or retort is subjected to a temperature of from 480°-810°C (900°-1500°F).[1] To preclude oxidation or combustion, little or no oxygen is added to the reactor as the waste thermally decomposes. Typical gaseous products include steam, carbon dioxide, carbon monoxide, hydrogen, and methane. Liquid condensate can contain such potentially valuable organic chemicals as methanol, ethanol, and various other alcohols, acids, and tars. The solid product is similar to charcoal, but also contains the nonorganic, nonvolatile constituents of the waste. Depending on the waste material, all three forms of the product could be used as a fuel source.

A major attraction of pyrolysis is the potential for recovery of economic value from waste products. Pyrolysis has only recently (1968) been applied to waste processing. It is potentially applicable to municipal and industrial organic wastes, with recent emphasis being placed on municipal waste disposal. Designs of pyrolysis units, have been developed by numerous organizations including the Bureau of Mines, West Virginia University, the Union Carbide Corp., the Garrett Research and Development Corporation, Monsanto, Inc., the Battelle Northwest Laboratories, and the Kemp Reduction Corp. Full scale municipal waste disposal facilities utilizing the Garrett and the Monsanto designs are currently being demonstrated by OSWMP resource recovery grants.

An example of a typical pyrolysis unit is the Kemp Converter which is being developed by the Kemp Reduction Corp. Municipal and oil wastes have been test destructed in a 4.5 metric ton/day (5TPD) pilot plant unit. The concept features recovery of a low BTU fuel gas as well as the liquid and solid fractions. The company is currently designing a 91 metric ton/day (100 TPD) test unit which will be located in Los Angeles, and is negotiating with the U.S. Corps of Engineers to supply a shipboard converter for harbor dredge spoils processing. Though the company believes their process is suitable for hazardous waste destruction, no unit testing on this application has been done.[2,3,4]

Capital costs for pyrolysis facilities will vary depending on the particular system chosen, the size, and on the use of heat recovery equipment. No capital or operating costs are available for hazardous waste facilities. Capital costs for municipal waste facilities vary from $11,000-$15,500/metric ton ($10,000 to $14,000/ton). Projected operating costs for these facilities vary from $4.40-$9.90/metric ton ($4.00-$9.00/ton).[5]

REFERENCES

1. Ottinger, R.S., Blumenthal, J.L., et al (TRW Systems, Inc.). Pyrolysis. In Disposal process descriptions ultimate disposal, inineration, and pyrolysis processes. In Recommended methods of reduction, neutralization, recovery, or disposal of hazardous waste. V3. Publication No. PB 224 579. Springfield, Virginia, National Technical Information Service. 249p.

2. Personal communication. K. Kemp, Kemp Reduction Corp., to H. Trask, OSWMP, Washington, D.C., September 11, 1973.

3. Personal communication. K. Kemp, Kemp Reduction Corp., to H. Trask, OSWMP, Washington, D.C., November 11, 1973.

4. Kemp Reduction Corp. Kemp waste converter. Santa Barbara, Co., Kemp Reduction Corp. 8p.

5. Personal communication. K. Kemp, Kemp Reduction Corp., to A. Scurlock, OSWMP, Washington, D.C., January 9, 1974. Recorded in telecon report by A. Scurlock, OSWMP, Washington, D.C., January 24, 1974.

APPENDIX XI

Incineration of Specific Materials

The attached matrix lists hazardous waste stream constituents for which incineration is considered an acceptable waste treatment alternative and includes additional parameters of interest where known. It is obvious that a great deal of additional detailed information on suitable operating parameters is needed. Plans to develop needed information were previously summarized.

The material in these tables comes primarily from the TRW Systems, Inc., report entitled Recommended Methods of Reduction, Neutralization, Recovery and Disposal of Hazardous Waste, which was performed as an adjunct study conforming to the requirements of Section 212 of the Solid Waste Disposal Act of 1965 As Amended. Some additional material from OSWMP files was added where appropriate. Reference to these tables will provide the user with an indication of whether or not a material in question may be incinerated, and in many cases, some of the operating problems, parameters, and procedures involved. These tables should be used in making preliminary investigations to indicate the overall practicality of the incineration approach to a specific hazardous waste problem. In many cases, more detailed information can be obtained by referring to the TRW report or to the Hazardous Waste Management Division of the Office of Solid Waste Management Programs (OSWMP).

To simplify presentation, the available information has been condensed as follows:

Column 1-presents the volume number and page number in the TRW series in which the subject substance is discussed in more detail.

Column 2-check marks indicate whether incineration is considered acceptabl for wastes of a concentrated and dilute nature. In most cases, where concentrated wastes are checked, but dilute wastes are not, the indication is that preferable, usually more economical approaches exist.

Columns 3-8-A cross mark indicates potential for formation of the pollutant. The type of heavy metal or additional pollutants of concern are indicated by chemical formula.

Column 9-where recycling or reclamation is a known alternative for at least some wastes containing the subject material, this column is checked. More information can be obtained from the previously mentioned TRW report.

Column 10-contains footnote numbers referring to additional criteria and information presented at the end of the table. This was done to preclude needless repetition of identical explanations.

In considering this information it must be remembered that most actual wastes are not only mixtures or solutions of the materials discussed here but also contain other materials, organic and/or inorganic. These may affect a decision on incineration and will affect the types and amounts of products of combustion to be in emissions and residues.

Although the Hazardous Waste Management Division of OSWMP believes, from current knowledge, that incineration is an acceptable treatment for the named materials, these tables should not be construed as an unqualified EPA endorsement, since detailed studies have not been performed with EPA monitoring to confirm the information. In the end, any decision regarding the environmental adequacy and safety aspects of incinerating a given waste material must depend on an overall analysis of the individual situation (incinerator characteristics, waste properties, etc.). Experimental or test burns may be desirable prior to full scale incineration to determine required operating parameters for complete destruction. Because of the health and environmental damage potential incineration of hazardous materials must not be entered into lightly. Reference is made to the list of considerations in Section I which should be addressed in analyzing any hazardous waste incineration proposal.

It is OSWMP's plan to update these tables on a periodic basis as more information is gathered. In this regard, users of this information can assist by notifying OSWMP of new information coming to their attention regarding test incineration results for various hazardous substances or waste materials.

FOOTNOTES

1. Controlled incineration of materials acceptable if equipped with a scrubber, catalytic or thermal unit to reduce NO_x, or SO_x emissions.

2. Incineration of concentrated materials and dilute organic mixtures is acceptable.

3. Incineration acceptable - preferably after mixing with another combustible fuel; care must be exercised to assure complete combustion to prevent the formation of phosgene. A scrubber is necessary to remove the halo acids produced.

4. It is believed that surplus military munitions, high explosives, and chemical warfare agents will be adequately destructed by the Armed Forces' Chemical Agent Munition Disposal Systems, which is nearing development completion. The main component of this system is a rotary kiln incinerator.

5. Concentrated waste containing no peroxides: discharge liquid at a controlled rate near a pilot flame. Concentrated waste containing peroxides are extremely explosive. No enviornmentally satisfactory technique has yet been discovered for disposal; storage is dangerous. Interim approach involves perforation of a container of waste from a safe distance (using rifle or explosive) in the open, away from habitation; followed by open burning. Incinerate dilute wastes at 815°C (1500°F) minimum. Spray aqueous materials into hot incinerator.

6. Incineration at 1000°C (1800°F) for two seconds is believed adequate. Alternately, primary conditions of 815°C (1500°F), one-half second and secondary conditions of 1200°C (2200°F), one second are considered equivalent.

7. Additional detailed criteria can be found in the TRW Systems report entitled Recommended Methods of Reduction, Neutralization, Recovery and Disposal of Hazardous Waste.

INCINERATION OF SPECIFIC MATERIALS

Substance	TRW Vol. (page)	Conc. Criteria		Potential Combustion Products					Recycling Potential	Other Criteria
		Conc.	Dilute	$HCL/COCl_2$	SO_x	NO_x	Other	Heavy Metals		
Acetaldehyde	10 (1)	X								
Acetic Acid	10(21)	X								
Acetic anhydride	10(21)	X								
Acetone	10(1)	X							X	
Acetone cyanohydrin	10(41)	X				X			X	1
Acetonitrile	10(41)	X				X			X	1
Acetylene	10(55)	X	X						X	
Acetyl chloride	10(21)	X		X						3
Acridine	10(213)	X				X			X	1
Acrolein	8(51)	X	X							6
Acrylic acid	10(101)	X							X	
Acrylonitrile	10(41)	X	X			X			X	1
Adipic acid	10(101)	X							X	
Aldrin	5(1)	X	X	X						
Allyl alcohol	10(115)	X							X	
Allyl chloride	10(147)	X	X	X						

INCINERATION OF SPECIFIC MATERIALS

Substance	TRW Vol. (page)	Conc. Criteria		Potential Combustion Products					Recycling Potential	Other Criteria
		Conc.	Dilute	$HCL/COCl_2$	SO_x	NO_x	Other	Heavy Metals		
Aminoethylethanol amine	10(155)	X	X			X			X	1
Ammonium picrate	7(69)	X	X							4, 7
Amyl acetate (Banana oil)	10(187)	X							X	
Amyl alcohol (Fusel oil)	10(115)	X							X	
Aniline (oil-amino benzene)	10(213)	X	X			X			X	1
Anthracene	10(55)	X								
Atrazine (2-chloro--4-ethylamino - 6-iso propylamine-S-triazine)	---	X	X			X				1,2,6
Benzene	10(55)	X								2
Benzene hexachloride (lindane)	5(29)	X	X	X						6
Benzene sulfonic acid	10(231)	X			X					1
Benzoyl peroxide	11(1)	X	X							7
Benzyl chloride	10(237)	X	X	X			Cl_2			6
Beryllium carbonate	12(243)	X	X				BeO_x	Be	X	
Beryllium chloride	12(243)	X	X	X			BeO_x	Be	X	
Beryllium hydroxide	12(243)	X	X				BeO_x	Be	X	

INCINERATION OF SPECIFIC MATERIALS

Substance	TRW Vol. (page)	Conc. Criteria		Potential Combustion Products					Recycling Potential	Other Criteria
		Conc.	Dilute	$HCL/COCl_2$	SO_x	NO_x	Other	Heavy Metals		
Beryllium Selenate	12(243)	X	X				BeO_x SeO_x	Be Se	X	
Boron hydrides	7(21)	X	X				B_2O_3 H_3BO_3			7
Bromacil (5-bromo-3-sec-butyl-6-methyluracil)	--	X	X			X	HBr			1,2,6
Butadiene	10(55)	X							X	
Butane	10(55)	X							X	2
1,2,4-Butanetriol trinitrate	11(9)	X	X			X				1
Butanols Butyl alcohol	10(115)	X							X	
1-Butene	10(55)	X	X						X	2
Butyl acetate	10(187)	X							X	
Butyl acrylate	10(187)	X							X	
n-Butylamine	10(155)	X	X			X			X	1
Butylene	10(55)	X	X						X	2
Butyl mercaptan	10(263)	X	X		X		H_2S			1
Butyl phenol	10(245)	X								
Butyraldehyde	10(1)	X							X	
Camphor	10(1)	X							X	

INCINERATION OF SPECIFIC MATERIALS

Substance	TRW Vol. (page)	Conc. Criteria		Potential Combustion Products					Recycling Potential	Other Criteria
		Conc.	Dilute	$HCL/COCl_2$	SO_x	NO_x	Other	Heavy Metals		
Carbolic acids (phenols)	10(245)	X								
Carbon disulfide	10(275)	X	X		X				X	1
Carbon monoxide	12(91)	X	X							
Carbon tetrachloride	10(283)	X	X	X			Cl_2		X	3
Chloral hydrate	10(283)	X	X	X					X	3
Chlorates with red phosphorus	13(5)	X	X	X						
Chlorobenzene	10(283)	X	X	X					X	
Chlordane	5(1)	X	X	X						2,3,6
Chlorine trifluoride and Chlorine pentafluoride	7(9)	X	X	X			HF Cl_2 F_2		X	3, 7
Chloroform - (trichloromethane)	10(283)	X	X	X					X	3
Chloropicrin	11(15)	X	X	X		X	Cl_2		X	1,3,6
Copper chlorotetrazole	7(83)	X	X	X		X	CuO_x	Cu		1
Creosote (coal tar)	10(55)	X								2
Cresol (cresylic acid)	10(245)	X								
Crotonaldehyde	10(1)	X							X	

INCINERATION OF SPECIFIC MATERIALS

Substance	TRW Vol. (page)	Conc. Criteria		Potential Combustion Products					Recycling Potential	Other Criteria
		Conc.	Dilute	$HCL/COCl_2$	SO_x	NO_x	Other	Heavy Metals		
Cumene	10(55)	X							X	2
Cyanoacetic acid	10(41)	X				X			X	1
Cyclohexane	10(55)	X							X	2
Cyclohexanol	10(115)	X							X	
Cyclohexanone	10(1)	X							X	
Cyclohexylamine	10(155)	X				X			X	1
DDD	5(29)	X	X	X						6
DDT	5(29)	X	X	X						6
DNBP (alkanolamine salt of 4,6-dinitro-sec-butyl-phenol) (premerge)	—	X	X			X				1,6
Dalapon (sodium salt of 2,2-dichloropropionic acid)	—	X	X	X						2,6
Decyl alcohol	10(115)	X							X	
Demeton	5(73)	X	X	X	X		PO_x P			1,2,6
Diazodinitro-phenol	7(89)	X	X			X				1,4,7
Dicamba	—	X	X	X						2,6
O-Dichlorobenzene	10(283)	X	X	X						3

Substance	TRW Vol. (page)	Conc. Criteria		Potential Combustion Products					Recycling Potential	Other Criteria
		Conc.	Dilute	$HCL/COCl_2$	SO_x	NO_x	Other	Heavy Metals		
Dichlorofluoromethane (Freon)	10(283)	X	X	X			Cl_2 HF			3
Dichloroethyl ether	10(283)	X	X	X						3
Dichloromethane (methylene chloride)	10(283)	X	X	X			Cl_2		X	3
2,4-D (Dichlorophenoxy acetic acid)	5(55)	X	X	X						2,6
1,2-Dichloropropane	10(283)	X	X	X					X	3
1,3-Dichloropropene (propylene dichloride)	10(283)	X	X	X					X	3
Dichlorotetrafluoroethane	10(283)	X	X	X			Cl_2 HF		X	3
Dicyclopentadiene	10(55)	X	X						X	2
Dieldrin	5(1)	X		X						1,2,6
Diethanolamine	10(155)	X				X			X	1
Diethylamine	10(155)	X				X			X	1
Diethylether	11(27)	X								5
Diethylstilbestrol	10(245)	X								
Diethylene glycol	10(115)	X							X	
Diethyltrimine	10(155)	X				X			X	1

Substance	TRW Vol. (page)	Conc. Criteria		Potential Combustion Products					Recycling Potential	Other Criteria
		Conc.	Dilute	$HCL/COCl_2$	SO_x	NO_x	Other	Heavy Metals		
Diisobutylene	10(55)	X								
Diisobutyl ketone	10(1)	X							X	
Diisopropanolamine	10(155)	X	X			X			X	1
Dimethylamine	10(155)	X	X			X			X	1
Dimethyl sulfate (methyl sulfate)	8(59)		X		X					1,6
2,4-Dinitroaniline	10(213)	X	X			X			X	1
Dinitrobenzol (dinitrobenzene)	11(43)	X				X				1,6
Dinitro/cresols	5(101)	X	X			X				1,2,6
Dinitrophenol	11(51)	X	X			X				1,6
Dinitrotoluene (DNT)	7(97)	X	X			X				1,3,7
Dioxane (Diethylene oxide)	11(27)	X								5
Dioxin		X	X							2,6
Dipentaerythritol hexanitrate (DPEHN)	7(103)	X	X							4,7
Diphenylamine (phenylaniline)	11(63)	X	X			X				1
Dipropylene glycol	10(115)	X							X	
Diuron [3-(3,4-dichlorophenyl)-1,1-dimethylurea]	---	X		X		X				1,6

Substance	TRW Vol. (page)	Conc. Criteria		Potential Combustion Products					Recycling Potential	Other Criteria
		Conc.	Dilute	$HCL/COCl_2$	SO_x	NO_x	Other	Heavy Metals		
Dodecylbenzene	10(55)	X								2
Endrin	5(1)	X	X	X						2,6
Epichlorohydrin	10(283)	X		X					X	3
Ethane	10(55)	X	X						X	2
Ethanol	10(115)	X							X	
Ethanolamine (monoethanolamine)	10(155)	X				X			X	1
Ethyl acetate	10(187)	X							X	
Ethyl acrylate	10(187)	X							X	
Ethylamine	10(155)	X				X			X	1
Ethylbenzene	10(55)	X							X	2
Ethyl chloride	10(283)	X	X	X					X	3
Ethylene	10(55)	X	X						X	2
Ethylene bromide Ethylene dibromide	11(69)	X	X	X			HBr			
Ethylene cyanohydrin	10(41)	X	X			X			X	1
Ethylene diamine	10(155)	X	X			X			X	1
Ethylene dichloride	10(283)	X	X	X					X	3

INCINERATION OF SPECIFIC MATERIALS

Substance	TRW Vol. (page)	Conc. Criteria		Potential Combustion Products					Recycling Potential	Other Criteria
		Conc.	Dilute	$HCL/COCl_2$	SO_x	NO_x	Other	Heavy Metals		
Ethylene glycol	10(115)	X								
Ethylene glycol nonoethyl ether	11(27)	X	X						X	5
Ethylenimine	11(91)		X			X				1
Ethyl mercaptan	10(263)	X			X		H_2S			1
Ethyl methyl ketone	10(1)	X							X	
Ethyl phenol	10(245)	X							X	
Ethyl phthalate	10(187)	X							X	
Fatty acids	10(101)	X							X	
Fluorine	8(25)	X	X				HF		X	1,7
Formaldehyde	10(21)	X							X	
Formic acid	10(101)	X								
Furfural alcohol	10(115)	X							X	
GB (Non-persistent nerve gas)	7(231)	X								1,7
Gelatinized nitrocellulose (PNC)	7(55)	X	X			X				1,4,7
Glycerine	10(115)	X								
Glycerolmonolacetate trinitrate (GLTN)	11(99)	X	X			X				1

INCINERATION OF SPECIFIC MATERIALS

Substance	TRW Vol. (page)	Conc. Criteria		Potential Combustion Products					Recycling Potential	Other Criteria
		Conc.	Dilute	$HCL/COCl_2$	SO_x	NO_x	Other	Heavy Metals		
Glycol dinitrate (DDN)	7(111)	X	X			X				1,4,7
Gold fulminate	7(83)	X	X				AuO_x	Au		7
Guthion	5(73)	X	X		X		P PO_x			1,2,6, 7
n-Heptane	10(55)	X	X						X	2
1-Heptene	10(55)	X	X						X	2
Heptachlor	5(1)	X	X	X						2,3,6, 7
Herbicide orange (mixture of 2,4-D and 2,4,5-T)	---	X	X	X						2,3,6
Hexachlorobenzene (HCB)	---	X	X	X			Cl_2			2,3
Hexachlorophene	10(283)	X	X	X					X	3
Hexamethylene diamine	10(155)	X				X			X	1
Hexane	10(55)	X	X						X	2
Hydrazine (Anhydrous diamine)	12(327)	X	X			X	NH_3			1,7
Hydrazine oxide/ hydrazine	11(105)	X	X			X	NH_3			1
Hydrocyanic acid (aq.)	13(57)	X	X			X				1
Hydrogen cyanide	13(57)	X	X			X				1
Hydroquinone	11(111)	X							X	6

Substance	TRW Vol. (page)	Conc. Criteria		Potential Combustion Products					Recycling Potential	Other Criteria
		Conc.	Dilute	$HCL/COCl_2$	SO_x	NO_x	Other	Heavy Metals		
Isobutyl acetate	10(187)	X							X	
Isopentane	10(55)	X							X	2
Isophorane	10(1)	X							X	
Isoprene	10(55)	X							X	2
Isopropyl acetate	10(187)	X							X	
Isopropyl amine	10(155)	X				X			X	1
Isopropyl ether	11(27)	X	X						X	5
Lead 2,4-dinitro-resorcinate (LDNR)	7(137)	X	X			X	PbO_x	Pb		1,4,7
Lead styphnate (lead 2,4,6-trinitroresorcinate)	7(145)	X	X			X	PbO_x	Pb		1,4,7
Lewisite	7(247)	X	X	X			As_2O_3	As		3,7
Malathion	---	X	X		X		P_xO_x			1,2,6
Maleic anhydride	11(119)	X							X	
Manganese methcyclopentadienyltricarbonyl	11(127)	X	X				Mn_xO_x	Mn		2,3,6,7
Mannitol hexanitrate	7(155)	X	X			X				1,4,7
MCPA (2-methyl - 4-chlorophenoxyacetic acid)	---	X	X	X						2,3,6

INCINERATION OF SPECIFIC MATERIALS

Substance	TRW Vol. (page)	Conc. Criteria		Potential Combustion Products					Recycling Potential	Other Criteria
		Conc.	Dilute	$HCL/COCl_2$	SO_x	NO_x	Other	Heavy Metals		
Mercury compounds (organic)	6(55)	X						Hg		
Mercuric fulminate	7(163)	X	X			X		Hg		1,4,7
Mesityl oxide	10(1)	X							X	
Methanol	10(115)	X							X	
Methyl acrylate	10(187)	X				X			X	1
Methylamine	10(155)	X				X			X	1
Methyl amyl alcohol	10(115)	X							X	
n-Methylaniline	10(213)	X				X			X	1
Methyl bromide	11(69)	X	X				HB_r			
Methyl chloride	11(69)	X	X	X						3
Methyl chloroformate	10(283)	X	X	X					X	3
Methyl formate	10(187)	X							X	
Methyl isobutyl ketone	10(1)	X							X	
Methyl mercaptan	10(263)	X	X		X		H_2S			1
Methyl methacrylate monomer	10(187)	X				X			X	1
Methyl parathion	5(73)	X	X		X		PO_x P			1,2,6

INCINERATION OF SPECIFIC MATERIALS

Substance	TRW Vol. (page)	Conc. Criteria		Potential Combustion Products					Recycling Potential	Other Criteria
		Conc.	Dilute	$HCL/COCl_2$	SO_x	NO_x	Other	Heavy Metals		
Morpholine	10(155)	X				X			X	1
Naphtha (crude)	10(55)	X							X	2
Naphthalene	10(55)	X	X						X	2
β-Naphthalamine	10(213)	X				X			X	1
Nemagon (1,2-dibromo-3-chloropropane)	---	X	X	X			Cl_2 HBr Br_2			2,3,6
Nickel carbonyl	8(35)	X				X			X	1
Nitroaniline (meta,para-nitroaniline)	11(137)	X				X			X	1,6
Nitrobenzene	11(145)	X				X				1,6
Nitrocellulose	7(47)	X	X			X				1,4,7
Nitrochlorobenzene (meta or para)	11(153)	X	X	X		X				1,3,6
Nitroethane	11(161)	X	X			X			X	1
Nitrogen mustard	7(255)	X	X	X		X				1,3,7
Nitroglycerin	7(171)	X	X			X				1,4,7
Nitromethane	11(161)	X	X			X			X	1
Nitroparaffins	11(161)	X	X			X			X	1
4-Nitrophenol	11(173)	X				X				1

INCINERATION OF SPECIFIC MATERIALS

Substance	TRW Vol. (page)	Conc. Criteria		Potential Combustion Products					Recycling Potential	Other Criteria
		Conc.	Dilute	$HCL/COCl_2$	SO_x	NO_x	Other	Heavy Metals		
Phthalic anhydride	10(21)	X								
Picloram	---	X	X	X		X	K KO_x			1,2,3,6
Picric acid	7(189)	X	X			X				1,4,7
Polychlorinated biphenyls (PCB's)	11(199)	X		X					X	
Polypropylene glycol methyl ester	11(27)	X	X						X	5
Polyvinyl chloride	10(283)	X	X	X					X	3
Polyvinyl nitrate	11(219)	X	X			X				1
Potassium dinitrobenzfuroxan (KDNBF)	7(197)	X	X			X	K KO_x			1,4,7
Potassium oxalate	12(145)	X	X				K KO_x			
Primers & Detonators	7(205)	X	X			X	PbO_x HgO_x	Pb Hg		1,4,7
Propane	10(55)	X	X						X	2
Propionaldehyde	10(1)	X							X	
Propionic acid	10(101)	X							X	
n-Propyl acetate	10(187)	X							X	
n-Propyl alcohol	10(115)	X							X	
n-Propylamine	10(155)	X				X			X	1

INCINERATION OF SPECIFIC MATERIALS

Substance	TRW Vol. (page)	Conc. Criteria		Potential Combustion Products					Recycling Potential	Other Criteria
		Conc.	Dilute	$HCL/COCl_2$	SO_x	NO_x	Other	Heavy Metals		
1 & 2 Nitropropane	11(161)	X	X			X			X	1
4-Nitrotoluene	11(173)	X				X				1
Nonyl phenol	10(245)	X							X	
Octyl alcohol (ethyl hexanol)	10(115)	X							X	
Oleic acid	10(21)	X							X	
Oxalic acid	11(183)	X	X							
Paraformaldehyde	10(1)	X				X			X	1
Paraquat	--	X	X	X	X					1,2,3,6
Parathion	--	X	X		X	X	PO_x			1,2,6
Pentaborane	7(21)	X	X				B_2O_3 B			7
Pentachlorophenol	8(67)	X		X			Cl_2			3
Pentaerythritol tetranitrate (PETN)	7(179)	X	X			X				1,4,7
n-Pentane	10(55)	X	X						X	2
Perchloroethylene	10(283)	X	X	X					X	3
Phenylhydrazine hydrochloride	10(213)	X	X	X		X			X	1,3
Phosphorus (white or yellow)	13(163)		X				P_4O_{10} P		X	

INCINERATION OF SPECIFIC MATERIALS

Substance	TRW Vol. (page)	Conc. Criteria		Potential Combustion Products					Recycling Potential	Other Criteria
		Conc.	Dilute	$HCL/COCl_2$	SO_x	NO_x	Other	Heavy Metals		
Propylene	10(55)	X	X						X	2
Propylene glycol	10(115)	X							X	
Propylene oxide	11(27)	X	X						X	5
Pyridine	10(213)	X				X			X	1
Quinone	11(223)	X	X						X	6
Salicylic acid	10(101)	X							X	
Sevin	---	X	X			X				1,2,6
Silver azide	7(211)	X	X				AgO_x	Ag		4,7
Silver styphnate	7(83)	X	X				AgO_x	Ag		4,7
Silver tetrazene	7(83)	X	X				AgO_x	Ag		4,7
Smokeless gunpowder	7(119)	X	X			X				1,7
Sodium alloy	13(229)	X	X				Na NaOH Na_2O_3			
Sodium azide	13(237)	X	X			X	Na NaOH Na_2O_3		X	1
Sorbitol	10(115)	X							X	
Styrene	10(55)	X	X						X	2,7
Sulfur mustard	7(263)	X	X		X					1,7

INCINERATION OF SPECIFIC MATERIALS

Substance	TRW Vol. (page)	Conc. Criteria		Potential Combustion Products					Recycling Potential	Other Criteria
		Conc.	Dilute	$HCL/COCl_2$	SO_x	NO_x	Other	Heavy Metals		
2,4,5-T	---	X	X	X						2,3,6
Tricresyl phosphate	11(247)	X	X				P PO_x		X	
Triethanolamine	10(155)	X				X			X	1
Triethylene glycol	10(115)	X							X	
Triethylene tetromine	10(155)	X				X			X	1
Trifluralin	---	X	X			X	HF			1,2,6
Trimethylamine	10(155)	X				X			X	1
Tripropane (Norene)	10(55)	X	X						X	2
Turpeotine	10(55)	X	X						X	2
Urea (plus salts)	10(155)	X				X			X	1
Vernolate	---	X	X		X	X				1,2,6
Vinyl acetate	10(187)	X							X	
Vinyl chloride	10(283)	X		X					X	3
VX (persistent nerve gas)	7(231)	X	X		X	X	P PO_x			1,7
Xylene	10(55)	X	X						X	2
Xylenol (xylol)	10(245)	X							X	

INCINERATION OF SPECIFIC MATERIALS

Substance	TRW Vol. (page)	Conc. Criteria		Potential Combustion Products					Recycling Potential	Other Criteria
		Conc.	Dilute	$HCL/COCl_2$	SO_x	NO_x	Other	Heavy Metals		
Zineb	---	X	X		X	X	ZnO	Zn		1,2,6

μσll: