FEDERAL WATER POLLUTION CONTROL ADMINISTRATION
NORTHWEST REGION, PACIFIC NORTHWEST WATER LABORATORY

HOUSEBOAT WASTES:

METHODS FOR COLLECTION AND TREATMENT

JUNE 1967

HOUSEBOAT WASTES

METHODS FOR COLLECTION AND TREATMENT

Prepared by

B. D. Clark
Technical Projects Branch

U. S. Department of the Interior
Federal Water Pollution Control Administration
Northwest Region
Pacific Northwest Water Laboratory
Corvallis, Oregon

June 1967

LIBRARY
Dept. of the Interior, FWPCA
Fairmont, W. Va. 26817

TABLE OF CONTENTS

		Page
I.	INTRODUCTION	1
	A. Authority	1
	B. Purpose and Scope	1
	C. Problem	1
II.	SUMMARY	5
III.	WASTE CHARACTERISTICS	11
	A. Waste Quality	11
	B. Waste Quantity	11
IV.	PLUMBING REQUIREMENTS	17
	A. Houseboats	18
	B. Other Floating Structures	29
V.	MOORAGE COLLECTION	33
	A. Collection System	33
	B. Moorage Lift Stations	40
VI.	TREATMENT	47
	A. Individual Methods	47
	B. Group Methods	52
VII.	EXAMPLE DESIGN	61
	A. Basic Design Criteria	61
	B. Layout and Cost Estimates	63
VIII.	BIBLIOGRAPHY	71
IX.	APPENDIX	73
	Appendix A - Plumbing Costs for Three Houseboats in Seattle, Washington	75
	Appendix B - Design Curves for Multiple Pump Systems	79

LIST OF FIGURES

Figure No.	Title	Page No.
1	Houseboat Water Use Pattern	14
2	Houseboat Plumbing Plans	20
3	Centrifugal Sump Design	27
4	Recirculating Toilet and Macerating Pump Application	30
5	Walkway Connections	36
6	Moorage Collection Costs	39
7	Centrifugal Sump Pump Installation	41
8	Moorage Lift Station	42
9	Extended Aeration Treatment Costs	55
10	Floating Restroom & Sewage Treatment Plant Used in Conjunction with Boating and Other Marine Activities	57
11	Floating Restroom & Sewage Treatment Plant Used with a Boat Holding Station Evacuation System . . .	58
12	Settling Tank and Chlorination Treatment	59
13	System Design	62
14	Design Curves for Multiple Pump System for Various Inflow and Pumping Rates	83
15	Design Curves for Multiple Pump System for Various Inflow and Pumping Rates	84

LIST OF TABLES

Table No.	Title	Page No.
1	Average Wastewater Quality from Three Individual Homes	12
2	Quantities of Sewage Flow	15
3	Estimated Costs for Plumbing a One-Bathroom, Single Story Houseboat with Copper, Cast Iron, and Plastic Materials	22
4	Houseboat Plumbing and Pumping Methods Summary	32
5	Comparison of Feces and Urine Waste Quantities to Total Household Wastes for a Family of Five People	50
6	Soil Absorption Areas Required for Single Houseboats for Various Percolation Rates	53
7	Cost Summary	69

ABSTRACT

Methods of collection and treatment for houseboat and moorage wastewaters are reviewed. Several methods using alternative materials are considered and approximate installed costs are given. Emphasis is on solution of the problem in the State of Oregon but information developed is applicable in adjacent states and elsewhere with appropriate adjustments.

ACKNOWLEDGMENTS

This study was made possible through the assistance of the following State and local agencies and individuals:

1. Oregon State Sanitary Authority
   Portland, Oregon

2. Floating Homes Association
   Seattle, Washington

3. Waterfront Property Owners Association
   Portland, Oregon

4. King County Health Department
   Seattle, Washington

5. City of Seattle Engineering Department
   Seattle, Washington

6. Hersey Sparling Meter Co.
   Seattle, Washington

7. City of Portland Water Bureau
   Portland, Oregon

8. Parkrose Water District
   Portland, Oregon

9. Master Equipment Co.
   Portland, Oregon

10. Cornell Pump Co.
    Portland, Oregon

11. H. D. Fowler Co.
    Seattle, Washington

12. DeFirs Moorage
    Portland, Oregon

13. Waterly Lane Moorage
    Portland, Oregon

14. Portland Rowing Club
    Portland, Oregon

15. Mr. Terry Pettus
Floating Homes Association
Seattle, Washington

16. Mr. Fred Repp
Master Equipment Co.
Portland, Oregon

17. Dr. Donald Guthrie
Professor of Math
Oregon State University
Corvallis, Oregon

HOUSEBOAT WASTES
METHODS FOR COLLECTION AND TREATMENT

I. INTRODUCTION

A. Authority

The Pacific Northwest Water Laboratory of the Federal Water Pollution Control Administration, Northwest Region, was requested by the Oregon State Sanitary Authority, letter dated January 19, 1966, to conduct,

> "A study of methods and costs of treatment and/or disposal of sewage wastes from houseboats and other floating structures."

The Federal Water Pollution Control Act, P.L. 84-660, as amended by the Clean Water Restoration Act of 1966, Section 5b, provides the Federal authorization for this study.

B. Purpose and Scope

The purpose of this study is to develop findings on wastewater characteristics, together with methods and costs of collection and treatment of sewage wastes from houseboats and other floating structures. The study area for the report included the States of Washington, Oregon, and California with primary emphasis on the State of Oregon.

C. Problem

In three Pacific Northwest States, California, Oregon, and Washington, there are over 1200 houseboats and many other floating structures such as boathouses, commercial establishments, floating restaurants, and public restrooms that discharge untreated sewage

wastes directly to waters over which they are moored. Few of these structures have plumbing systems.

All three states presently have legislation in varying forms, both local and State, that require houseboats and other floating structures to treat their sewage before discharge or else require complete removal to existing shoreside sanitary sewers.

In California, State law prohibits the discharge of untreated sewage to waters of the State and action is being taken by the California Water Quality Control Board in the form of cease and desist orders against property owners that have houseboats moored at their property. The State has had little success to date in enforcing these orders.

In Washington, most houseboats are located in the City of Seattle and are required by city and county ordinances to connect to a recently constructed city sewer by June 1967. Development of acceptable collection methods and difficulties with local contractors on construction costs indicate that the June 1967 deadline will not be met.

In the State of Oregon, houseboats and other floating structures will be required specifically by State law (ORS 449.150) to provide adequate treatment for all wastes discharged to State waters effective September 1, 1967. This time limit has recently been extended by the Sanitary Authority to January 1, 1968, for the installation of waste treatment facilities for toilet wastes. Treatment facilities for kitchen, bath, and laundry wastes (not

including garbage or human excreta) were given an extension of time from September 1, 1967, to January 1, 1971, provided adequate facilities were installed for toilet wastes and acceptable progress reports are submitted on January 1, 1969, and January 1, 1970, demonstrating the development of a satisfactory plan acceptable to the Authority for the disposal of the kitchen, bath, and laundry wastes.

II. SUMMARY

Findings of this study on methods for the collection and treatment of wastes from houseboats and other floating structures are summarized below:

1. The study area for this report includes the States of Washington, Oregon, and California which have over 1200 houseboats and many other floating structures requiring sewage collection and treatment facilities.

2. With rare exception, houseboats and other floating structures discharge untreated domestic sewage from toilets, kitchens, and baths directly to the water in violation of State statutes and water quality standards, and this may constitute a health hazard to other water users.

3. Average daily houseboat wastewater quantities are similar to those for normal land residences with a daily per capita flow of 75 gpd. The average 16-hour flow is also similar with a per capita flow rate of 95 gpd.

4. The quality of the houseboat waste is expected to be similar to that for a normal land residence. A separate report will present data on the quality characteristics of the houseboat waste.

5. The collection and treatment of houseboat wastes will be more expensive than most land-based installations because of their location.

6. Few houseboats have adequate plumbing systems, requiring major replumbing to collect and treat wastes. Several methods are presented for replumbing. The range of costs are estimated from $230 to $800 for a single story, one bathroom houseboat. Plastic PVC pipe costs the least. This material is not approved for use in Oregon or Washington for interior plumbing but is acceptable in California.

7. Central collection of all wastes is recommended wherever possible requiring that moorages provide central collection facilities for houseboat wastes and wastewaters from other floating structures. Costs for above water, pressure moorage collection systems installed were estimated to range from 8½ to 83 cents per houseboat per foot of moorage length using cast iron pipe and 5 to 48 cents per houseboat per foot of moorage length using PVC plastic pipe for moorages ranging in size from 50 to 5 houseboats, respectively. Costs would be significantly higher for gravity underwater collection systems.

8. Houseboats located on rivers or waters with a large tidal fluctuation may require individual pump units to maintain collection lines above water. Individual houseboats on these waters may or may not require pumps depending on whether they treat their wastes on shore or on the water with a floating facility. Several pumping methods have been considered that range in price from $275 to $1500, not including installation costs.

9. Houseboats located on lakes or other relatively quiet bodies of water could use either gravity underwater systems to a central lift station or individual pumping units for pumping direct to shore.

10. Moorages on widely fluctuating rivers may find it necessary to install lift stations on auxiliary floats to lift the waste to shore-based treatment facilities or public sewers. These units can be purchased in a price range of $2500 to $7100.

11. Recirculating toilets may find application where the waste volume is significant. This would be the case for intermittent waste sources that choose to hold the wastes with periodic cleaning of the holding facilities.

12. Pumping all wastes to a shore sewer is the least expensive and most practical alternative wherever this is possible. It has been estimated that exclusive of city or other municipal group connection charges, a houseboat could pump all wastes to a city sewer for a cost ranging from $1000 up.

13. Individual treatment devices including macerator-chlorinator toilets, incinerator toilets, septic tanks with soil absorption fields, and aerobic extended aeration units were considered.

14. Macerator-chlorinator units presently available commercially are not recommended for use in treating wastes from the floating structures considered in this report.

15. Incinerator toilets provide satisfactory treatment of toilet wastes with proper operation and maintenance. They are

not satisfactory when considering the entire household waste. The estimated costs for these units installed will range from $350 to $575 per unit.

16. For no more than one houseboat, a properly designed and constructed shore septic tank with soil absorption field would provide satisfactory treatment in areas where soil conditions and local regulations permit. Such a system installed would cost from $1100 up.

17. Aerobic biological treatment units with disinfection facilities would provide satisfactory treatment of all wastes in most waters of the study area. Packaged units are available commercially that could be used in either a floating- or shore-type of installation. Costs for a floating unit would range from $1800 to treat the wastes from a single houseboat, to $200 per houseboat for the wastes from 50 houseboats.

18. Commercially available biological treatment units are oversized for individual houseboat applications making them bulky and prohibitively expensive. There is a need for an economical individual household secondary treatment device capable of operating satisfactorily with a minimum of operation and maintenance.

19. Primary settling with sludge removal facilities and chlorination of the effluent could be considered as an interim method of treatment. This process may find application where sewers are not presently available but are contemplated in the near future. The lower degree of treatment will not interfere with other beneficial uses of the water. A system adequate to serve up to 25 to 35 houseboats could be fabricated for $500 to $700, excluding labor costs.

20. A system design with three alternatives was made for a typical moorage in the Portland, Oregon, area. The design considered: (1) pumping with centrifugal pumps from each houseboat to a lift station for further lifting to a city sewer, (2) pumping with centrifugal pumps directly to a city sewer from each houseboat, and (3) pumping with pneumatic ejectors to a floating treatment facility. The cost to the individual houseboat owner for each plan was $935, $1560, and $1460, respectively. The first cost to the moorage owner for each plan was $7500, $4600, and $8700, respectively. These figures do not include annual costs for financing, operation, and maintenance.

III. WASTE CHARACTERISTICS

Houseboat waste is purely domestic in nature and is expected to be similar in both quality and quantity to that of a normal land residence. A literature search was made to characterize the houseboat waste on the basis of normal household characteristics but, the available information is limited particularly on an individual household basis. That which was found, together with field data collected to date, is reported at this time.

A. Waste Quality

Watson et al[1] report on the quality characteristics of wastewaters from several individual land residences obtained in an extensive sampling program of several years. These data are expected to be characteristic of houseboat wastes. Table 1 summarizes data from this report for three homes.

B. Waste Quantity

The reported average residential sewage flow per capita is approximately 75 gallons per day (gpd) with a range from 27 to 200 gpd.[2][3] The percent distribution of this flow has been estimated as follows:

Waste Source	Reference 2	Reference 3	Average
Kitchen Wastes	13.3%	6%	10%
Toilet Wastes	33.4%	41%	38%
Showers, Washbasins, etc.	33.3%	37%	35%
Laundry Wastes	20.0%	4%	12%

The basic design flow variations used for small Army installations are reported on page 13.

TABLE 1

Average Wastewater Quality from Three Homes after Watson[1]

ANALYSIS (mg/l)	HOME 1	HOME 2	HOME 3
Total Solids	866	788	1249
Suspended Solids	363	293	473
Total Volatile Solids	468	414	659
COD	705	540	882
BOD_5	542	284	479
Detergents	5.3	5.2	6.9
Total Nitrogen	69	61	121
NH_3-Nitrogen	53	48	92
Total PO_4	47	70	65
Ortho-PO_4	31	40	40
Grease	95	33	66
pH	8.0	8.0	8.3
Flow (gpd)	388	331	123
Family Characteristics	**Home 1**	**Home 2**	**Home 3**
Total People	5	5	5
Children	2	3	1
Home Laundries	1	1	1
Dishwashers	1	1	1
Baths	5	3	1

Basic Design Flow Variations
for Small Army Installations

Condition	Per Capita Flow, gpd
24-hour average	70
16-hour average	37.5
4-hour maximum	122.5
Extreme Peak	210

At this writing, limited data have been obtained on the waste discharge from houseboats. Assuming that the waste disposal pattern would parallel the water consumption with a certain time lag between usage and discharge and a small consumptive loss, water use was monitored at several moorages.

The measured average houseboat per capita water consumption is 78 gpd, based on the use at two moorages in the City of Portland (Portland Rowing Club and Water Lane Moorage) and one moorage in the City of Seattle. This is based on data for 1585 houseboat-months water use. With a 5 percent consumptive loss,(1) the average waste discharge is 74 gallons per capita per day (gpcd) which agrees closely with figures reported previously.

Data on hourly flow variations were obtained by installing a continuous recording device on a water meter serving the Waterly Lane Moorage located on the Willamette River in Portland, Oregon. Figure 1 averages these data for two weekend periods. Analysis of the data indicates good agreement with those reported previously.

Waste quantities from other floating structures can be estimated from Table 2 reproduced in part from the Manual of Septic Tank Practice.(2)

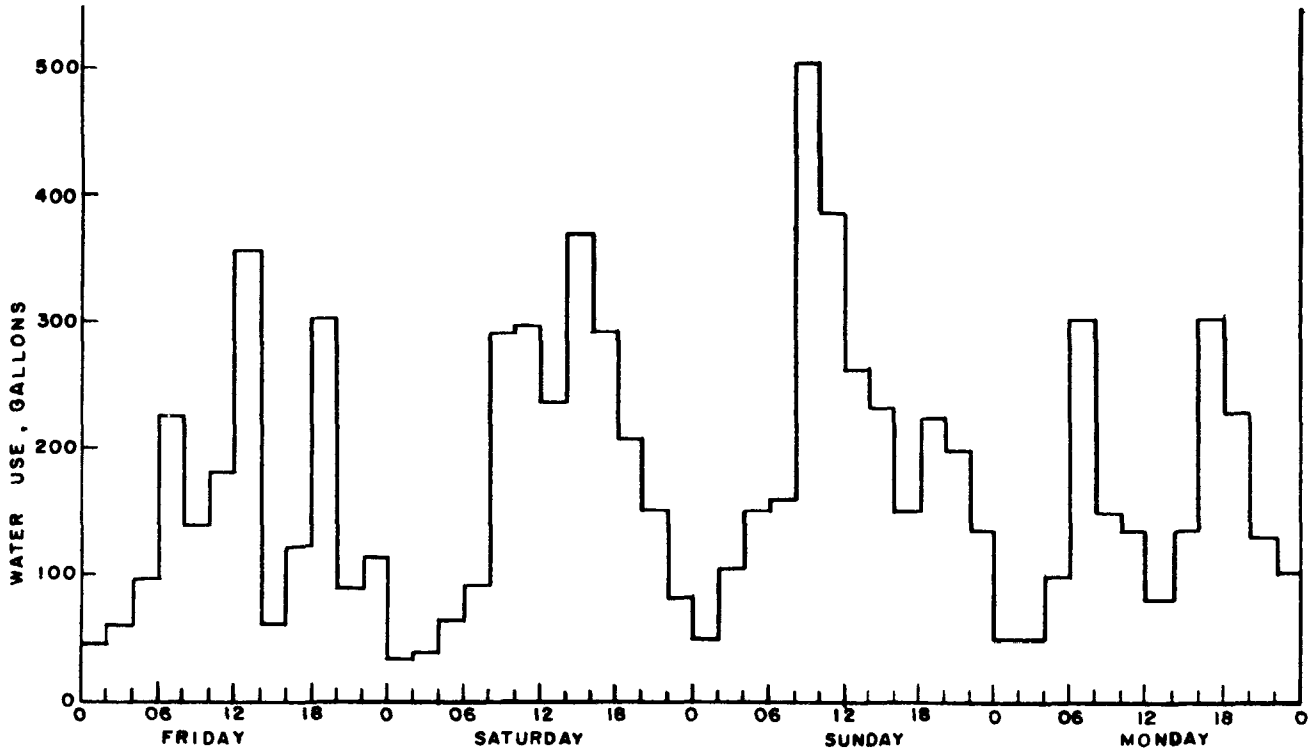

NOTE: DATA PRESENTED IS AN AVERAGE OF TWO WEEKEND PERIODS (SEPT. 10-13 and OCT. 22-25) FOR THE WATERLY LANE MOORAGE, PORTLAND, OREGON.

HOUSEBOAT WATER USE PATTERN

FIGURE 1

TABLE 2

QUANTITIES OF SEWAGE FLOW

Type of Establishment	Sewage Flow*
Single family dwellings	75 gpcd
Restaurants (toilet & kitchen wastes/patron)	7-10 gallons
Restaurants (kitchen wastes/meal served)	2½-3 gallons
Public restrooms (toilet wastes only)	5 gallons/ patron
Public bathhouses (bathhouse, showers, toilets)	10 gpcd
Stores (per toilet room)	400 gallons/ day

*If recirculation toilets are used, the volume of toilet waste could be calculated on the basis of four gallons per 80 usages.

IV. PLUMBING REQUIREMENTS

To provide treatment for wastes from houseboats and other floating structures, the wastes must first be collected and transported to a single point. In the case of houseboats that treat their wastes individually, this point may end at the houseboat. For a moorage with a number of houseboats, boathouses with sanitary facilities, and other structures with liquid waste discharges, a common collection system with a single treatment facility is the most economical approach.

The problem of collection is complicated by flood stage fluctuations on the rivers (as much as 27 feet on the Willamette and Columbia Rivers in the vicinity of Portland), river currents, floating and submerged trash, tidal fluctuations, and the fact that few of the existing houseboats and other floating structures have plumbing systems. To overcome these problems, individual pumping units at each waste source with sufficient capacity to pump the waste to a shore-based facility or a facility at the moorage level were considered. An alternative to the individual pumping units would be to retain the waste in a holding tank and use a portable pump to empty the holding tank periodically. Gravity systems could be used on lakes and other quiet bodies of water but these were not considered in this report.

This section is composed of two portions dealing first with the individual collection, holding, and pumping systems, and second with the moorage collection and pumping systems.

It is expected that the individual will be responsible up to the point of system connection and the moorage will be responsible for providing a conveyance system and holding tank emptying facilities, if necessary.

A. Houseboats

The waste collection may require complete replumbing and individual pumping units or simple holding facilities with provision made for draining periodically. In areas where gravity systems can be utilized, replumbing may be all that is required.

The drainage system of houseboats, boathouses, and other floating structures with few exceptions, is composed of vertical drain lines from each fixture discharging directly to the water. Because all wastes, including kitchen, laundry, and bath, require treatment, most houseboats will require complete replumbing. Also, in areas where necessary to maintain lines above water, each structure will have to be provided with a pump unit or a holding tank.

1. Plumbing Methods

Methods and materials for plumbing installations on houseboats and other floating structures must comply with State and/or local plumbing codes except when alternatives are approved by the plumbing department with jurisdiction. It is recognized that there are structural and financial problems involved unique to the existing houseboats which may justify relaxation of certain code requirements to effect a reasonable solution.

The Floating Homes Association, Seattle, Washington, which represents about 500 houseboats located on Lake Union within the

City of Seattle, together with the City of Seattle Plumbing Department has developed an acceptable plan for replumbing existing houseboats. At this time approximately 80 houseboats have been plumbed according to this plan. This basic plan, modified to meet the State of Oregon Plumbing Code, is presented in Figure 2.

This method of plumbing for houseboats facilitates construction and minimizes the expense involved, yet provides a completely workable system. In the future, all houseboats without exception will be expected to comply with State or local plumbing codes.

Approved materials for replumbing are specified by most State or local codes. In Oregon, the State plumbing code requires that all fixtures be trapped and that waste discharge piping be either galvanized steel, galvanized wrought iron, cast iron, brass, lead pipe, or copper tube. Plastic pipes, Acrylonitrile-Butadiene-Styrene (ABS), or Polyvinyl Chloride (PVC), that conform to the temporary standards of the U. S. Department of Commerce (CS270-65 for ABS pipe and CS 272-65 for PVC pipe) are acceptable for use in California but are not approved in Oregon or Washington. The National Plumbing Code has proposed revisions to include plastic pipe and fittings for water, sewer, drain, and waste lines. When and if these revisions are made, Oregon and Washington, as well, may allow the use of plastic materials.

To provide relative cost estimates for replumbing houseboats, a typical floor plan for a one bathroom, single story houseboat was chosen and cost estimates were made for replumbing

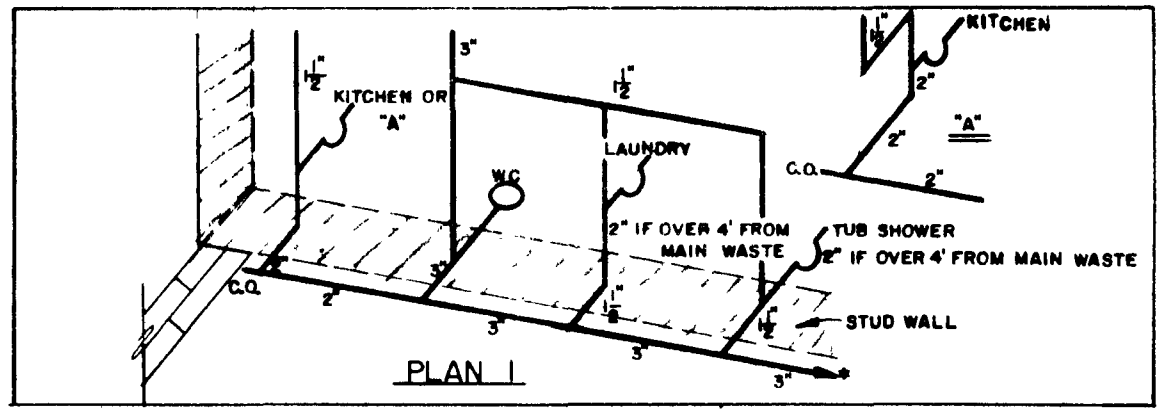

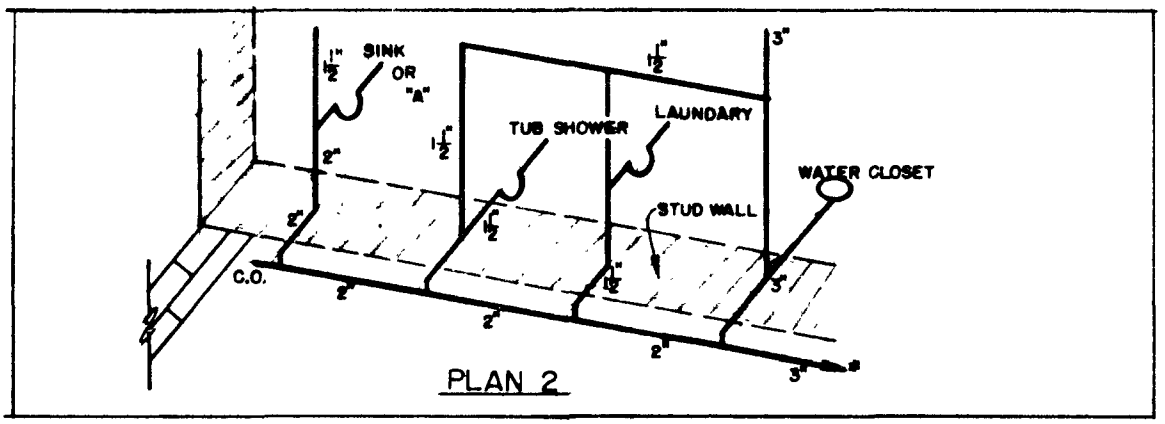

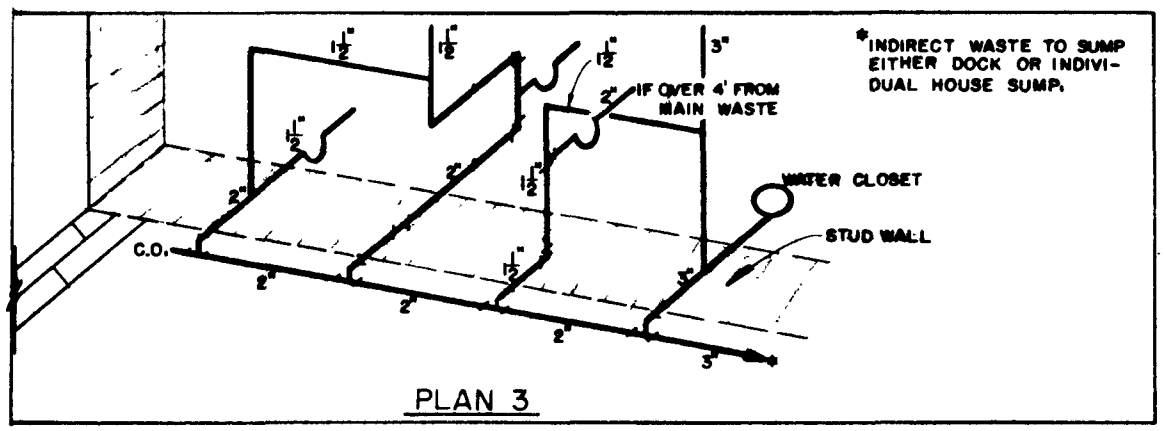

NOTE: BASIC PLUMBING PLANS WHICH MEET OREGON CODES.
CONTACT LOCAL STATE, COUNTY OR CITY PLUMBING DEPT. WHEN DESIGNED FOR STRUCTURES OR VARIANCE IS NECESSARY.

HOUSEBOAT PLUMBING PLANS

FIGURE 2

with copper, cast iron, and plastic materials according to the plan illustrated by Figure 2. The cost of material was based on an average of unit prices at local distributors in the State of Oregon. Unit labor costs were estimated at $9.50 per man-hour and the construction time at 40 man-hours using copper pipe.* Construction time for the other two materials was based on a recent article by Pierce using copper material as a reference.(5) These times are given as follows:

Material	Relative Construction Time
Copper	1.0
Plastic (ABS or PVC)	0.35
Cast iron	1.83

The estimated cost for replumbing a one-bathroom single story houseboat is $230 with plastic materials, $560 with copper materials, and $800 with cast iron. These costs are summarized in Table 3.

The estimated labor costs in Table 3 can be reduced significantly if the owner assists in the work as indicated by three examples of houseboat replumbing presented in Appendix A. The owners did their own carpenter work and assisted the plumber which reduced the average construction time by a factor of two. It should be noted that the construction times for cast iron and plastic materials are hypothetical and may differ significantly in practice.

---

*Based on figures provided by University Mechanical Contractors, Inc., Seattle, Washington, for three houseboats. See Appendix A for details.

TABLE 3

ESTIMATED COSTS FOR PLUMBING A ONE-BATHROOM, SINGLE STORY HOUSEBOAT WITH COPPER, CAST IRON, AND PLASTIC MATERIALS

Type	Cost of Materials	Labor Costs	Total Cost
Copper	$ 180	$ 380	$ 560
Cast Iron	$ 110	$ 690	$ 800
Plastic (PVC or ABS)	$ 100	$ 130	$ 230

2. Pumping Methods

Where pump units are required, the houseboat drainage system should tie into a small sump with a pump or ejector to convey the waste under pressure to point of treatment or disposal. The sump or ejector which could be connected to the houseboat float should conform to the following design criteria:

a. Storage capacity excluding pump of at least 20 gallons.

b. Material should be cast iron, fiberglass, aluminum, PVC, or steel coated with an asphalt or epoxy compound. The weight of the sump should not be excessive.

c. Maximum liquid level in the sump should be 30 inches below the moorage connection, if possible.

d. Inlet diameter should be a minimum of 3 inches and the outlet diameter a minimum of 2 inches. If suitable maceration precedes the pump, the outlet can be reduced even more.

e. Adequate venting should be provided. A 2-inch vent extended above the roof line is suggested.

f. There must be no overflow from the sump.

g. It should be located or protected in such a manner as to prevent damage from boats, swimmers, floating or submerged debris, and to facilitate maintenance and inspection.

In pump selection, there are a number of alternatives open to the houseboat owner depending on his location and whether treatment is provided on shore or on the water.

If the waste is treated on shore, which is recommended wherever feasible, the pump capacity should be 55 gpm at heads varying from 10 to over 40 feet. An arbitrary selection of 20 feet was made to differentiate between high and medium head pumps on the basis of several typical head-capacity curves. The capacity of 55 gpm was selected on the basis of providing a 2.5 feet per second (fps) velocity in a 3-inch pipe.

High head pumps would be required for pumping directly to shore in the Portland, Oregon, area. In nearly all other areas where houseboats are located in the States of Oregon, Washington, and California, medium head pumps could be used for pumping wastes to shore.

If the waste is pumped to a floating treatment facility or to an auxiliary lift station used in place of individual high head pumps, a low head pump should be used with a capacity of at least 55 gpm at a head of 0 to 10 feet.

Two types of pumps have been considered: pneumatic ejectors and centrifugal pumps.

Pneumatic ejectors consist essentially of a closed tank into which sewage flows by gravity until it reaches a certain depth. Then air under pressure is admitted into the tank to displace the sewage through the discharge line until the low water level control cuts off the air supply. Ejectors require one-way valves on both inlet and outlet pipes, venting on the inlet side, level control mechanisms, and a source of air under pressure. For individual houseboat pumping, pneumatic ejector units should provide their own air supply. If pneumatic systems were standardized on all houseboats, perhaps moorages would provide the air supply, but this possibility is unlikely.

Pneumatic ejectors have the advantage of operating satisfactorily over a wide range of heads from a minimal to a high head, and to pass solids equal in size to the inlet and discharge piping. Their main disadvantages include problems with check valves seating properly, air control, and their high initial cost. While they are not free from operating problems, they are usually superior to centrifugal pumps that handle raw sewage.

Pneumatic ejectors are ideally suited for houseboats in principle because of their adaptability to various head requirements and their nonclog characteristics. However, few commercially available units are economically feasible for houseboat application.

At present, an ejector specific for houseboats for pumping up to heads of about 20 feet is being developed in Portland. This work is aimed primarily at developing a unit that is small, self-

contained, that minimizes problems with controls and check valve clogging on the inlet side, and that has a significantly lower cost. A test unit has been constructed and will be operated on a houseboat for several months to obtain data on its operation. An approximate cost of this unit exclusive of valves, fittings, and the small compressor to activate the ejector is $550. The additional cost of valves, fittings, etc. and the compressor would run between $150 and $200 for a total price of approximately $750. An ejector sufficient to pump against higher heads would be considerably more expensive--on the order of $1500.

Radial flow centrifugal pumps, submerged or dry, were considered as applicable for individual houseboat pumps. This type was chosen because it is less expensive than other types of pumps and is available commercially in packaged sump type installations.

Centrifugal pumps are compact and less expensive than pneumatic ejectors. Their main disadvantages include: (1) operating head limitations and (2) clogging problems due to rags, stringy material, and other solids found in raw sewage.

High head centrifugal pumps are available commercially and, with minor modification, can satisfactorily pump houseboat wastes ashore in high head pumping areas. Modifications include throttling of the flow to reduce velocities when the total pumping head requirement is low. This may also necessitate maceration of the sewage prior to pumping in order to maintain a system free from

clogging. It is estimated that a high head pump and sump, not installed, would cost at least $450. With maceration preceding the pump, the cost is estimated at $600.

Low head centrifugal pumps are also available commercially and could be used without modification for pumping ashore in areas with a 10- to 20-foot head requirement. A packaged sump and pump of this type is estimated to cost at least $350 not installed

A less expensive low head centrifugal pump could be used for pumping at the moorage level against heads less than 10 feet but would require some modifications. Throttling of the discharge which may in turn require maceration would be necessary or the static lift would have to be increased above 5 feet to assure dependable service. The cost for this type of pump with sump not installed would be at least $275. To provide adequate maceration prior to the pump would cost on the order of $150 for a total price of $425.

A submersible type of centrifugal pump application that could be used when throttling is required is illustrated schematically by Figure 3. This design includes a food grinder on the inlet and a gate valve on the discharge line for throttling. The grinder macerates the sewage solids which reduces pump and valve clogging. Throttling should be avoided if at all possible since this requires additional and frequent maintenance.

The disadvantages to this design should be carefully considered before actual installation. These are:

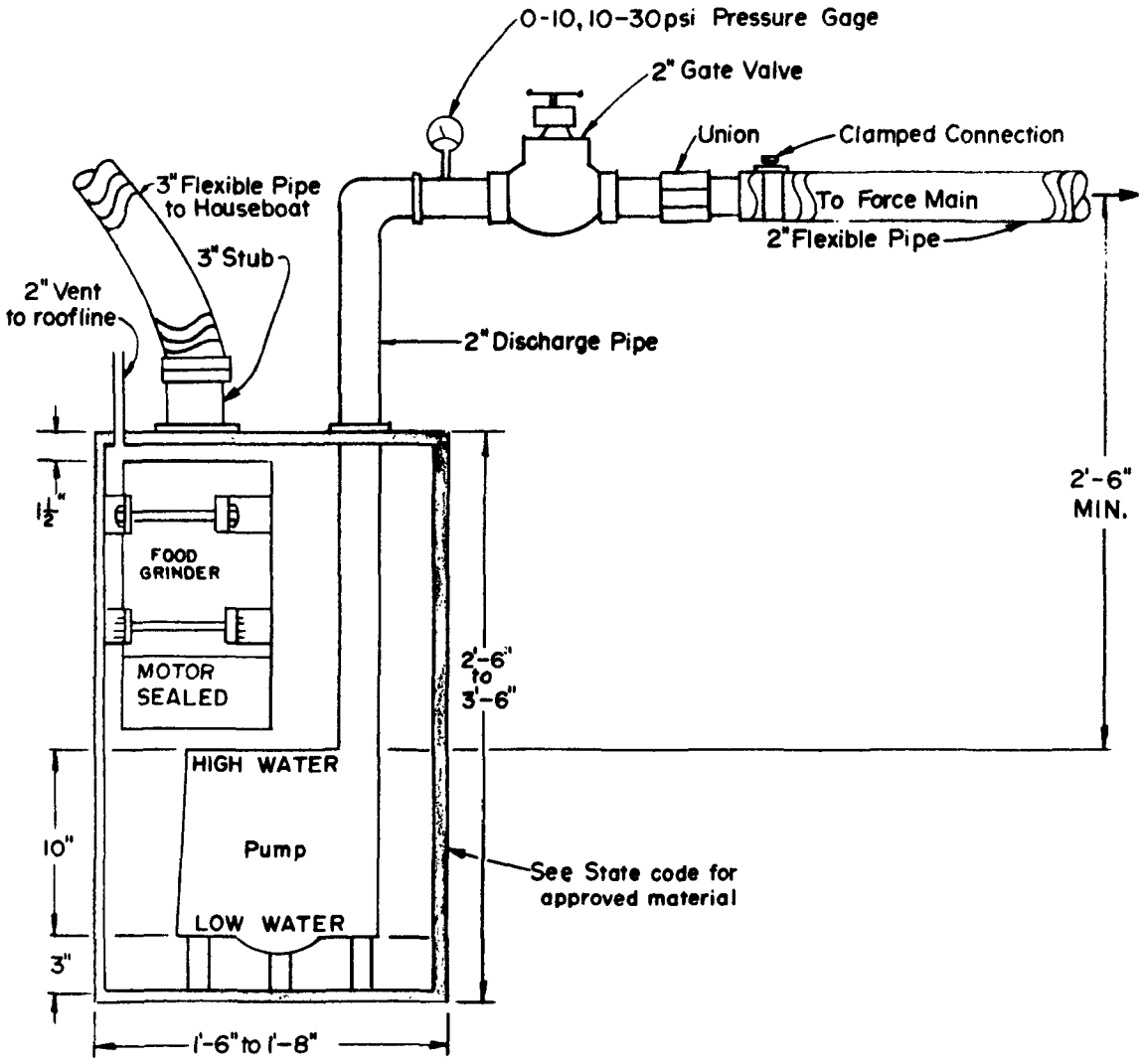

NOTE: Inlet, Outlet and Vent pipes require watertight seals.
Clamped connection can be used as safety shear section.
Food Grinder is optional feature - not recommended unless throttling required.

CENTRIFUGAL SUMP DESIGN

FIGURE 3

a. The use of food grinders on raw sewage has serious drawbacks, because they were not designed for this type of operation. Any rags, sanitary napkins, or other long stringy material would most likely clog the grinder and require manual cleaning. The life of the unit under these conditions is unknown and in most cases standard warranties would not be applicable. There is only one instance reported in the literature of a similar setup using a food grinder to precede a pump. Watson et al.[1] report using a food grinder in their waste sampling apparatus for several individual households for several years with no apparent difficulties.

b. The grinder would have to be modified by placing the manual restart switch outside the sump and the motor would have to be sealed to water tightness.

c. A switching mechanism is also required to start the grinder when there is flow to the sump.

d. Few centrifugal pumps in a feasible price range for houseboat use will pass rags, sanitary napkins, etc. without clogging. The use of these pumps requires either close control over what is discharged to the sewer or frequent maintenance.

A unit with the grinder option has been constructed and is being used in a 6-week houseboat sampling program in Seattle, Washington. Data on the installation cost and operation of this unit will be made available in a separate report.

An alternative to use of a food grinder would be to install a macerating type pump in the interior plumbing system of the structure.

This type of pump is commercially available and is used widely for draining mobile home holding tanks and other types of sewage holding facilities where the pumping head is less than 4 feet.

This alternative has the advantages over the food grinder of being a tried and tested unit and is considerably less expensive. It is estimated that this unit could be installed for approximately $100 and would result in additional savings by allowing the use of plumbing materials no greater than 2 inches. Figure 4 gives a schematic layout of this system.

Table 4 summarizes the various plumbing and pumping methods with their associated costs.

B. Other Floating Structures

For floating structures other than houseboats, with intermittent usage, such as boathouses, public restrooms, etc., a number of commercially available devices could be employed for the collection and/or treatment of the wastes.

If the structure has only a toilet such as many of the public restrooms, recirculating, chemical, or incinerator toilets could be successfuly used. With the exception of the incinerator toilet, these methods require facilities for periodical cleaning; e.g., a portable sewage pump could convey the wastes to a point of treatment or disposal.

For structures with waste sources other than toilets such as certain boathouses, some commercial facilities including floating restaurants, boat supply stores, etc. with sink and bath or shower

METHOD I

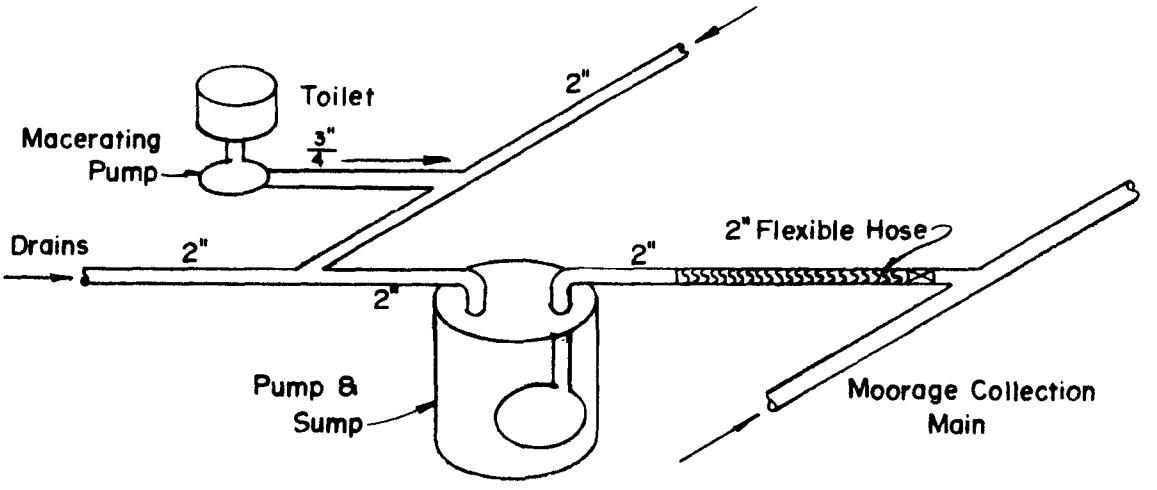

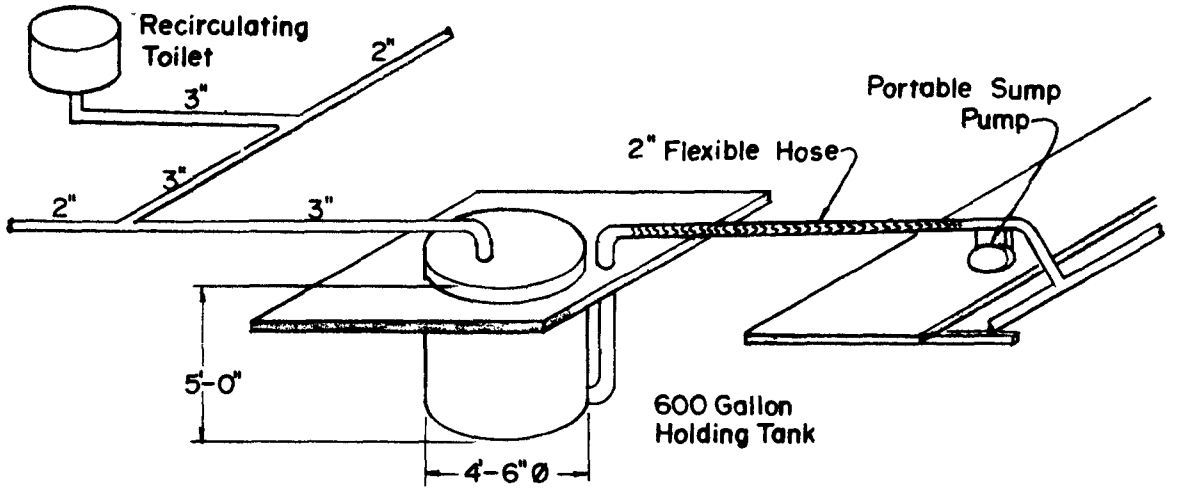

METHOD II

MACERATING PUMP AND RECIRCULATING TOILET APPL.

FIGURE 4

wastes, holding tanks could be used with one of the three toilet devices mentioned above. The tanks could be sized to retain the waste for several weeks or longer on the basis of flow quantities given previously in Table 2. Disinfectant chemicals would be required to inhibit sewage decomposition and offensive odors. An installation similar to that illustrated by Method II in Figure 4 could be used. The estimated cost for holding tanks and recirculating toilets to accommodate two complete restrooms with washbasin and shower facilities for a 2-week period would cost from $700 to $900.

TABLE 4

HOUSEBOAT PLUMBING AND PUMPING METHODS SUMMARY

Method	Type	Minimum Estimated Costs/Structure
Plumbing (including labor for installation)	Plastic	$ 230
	Copper	$ 560
	Cast Iron	$ 800
Pumping to a point at the moorage level. Head 0-10 feet	Pneumatic ejector	$ 800
	Centrifugal w/o maceration	$ 325
	Centrifugal w/maceration	$ 425
Pumping to shore at total heads 10-20 feet	Pneumatic ejector	$ 800
	Centrifugal w/o maceration	$ 400
	Centrifugal w/maceration	$ 500
Pumping to shore at total heads 10-40 feet	Pneumatic ejector	$ 1600
	Centrifugal w/o maceration	$ 500
	Centrifugal w/maceration	$ 650

V. MOORAGE COLLECTION

This section of the report presents design criteria and cost estimates for a moorage collection system, including design capacity, swells, waves, float connections, effects of temperature, selection of materials, and design of houseboat connections and lift stations.

A. Collection System

The first step in the planning of a moorage collection system is the overall plan or system layout in which both present and future sources of waste must be considered.

The wastes on a houseboat moorage or marina come from a variety of sources other than houseboats. These include boathouses with sanitary facilities, public restrooms, floating restaurants, snack bars, commercial establishments with sanitary facilities, and pleasure craft with toilets. Wastes of a continuous nature require individual connections to the moorage system. This includes the houseboats, floating restaurants and snack bars, and other commercial establishments with a continuing water use. Other intermittent wastes from public restrooms, boathouses, and pleasure craft, and certain of the commercial establishments such as boat supply houses, repair shops, etc., may not require individual connection to the system but instead, could utilize holding tanks, recirculating , chemical, or incinerator toilets.

Provisions should be made for any future expansion of the moorage for houseboat mooring, boathouses, etc. The systems should be designed with capacity to receive wastes expected during the life of the moorage.

Moorages located on rivers, such as nearly all those in the State of Oregon, will require pressure collection systems to maintain lines above water because of river currents, submerged and floating trash, and water stage fluctuations. As discussed previously, each individual connection to the system will require a pump with adequate capacity to force the waste to a central point for treatment or further pumping. This may be on the water or on the shore.

In the States of Washington and California, most houseboats are located on lakes, bays, or other relatively calm bodies of water with little stage fluctuation. In these situations, gravity lines under water to a central lift station could be considered as well as the individual pump units for a pressure system.

1. Design Capacity and Sizes

A sanitary sewer has two main functions: (1) to carry the peak discharge for which it is designed, and (2) to transport suspended solids so that deposits in the sewer are kept to a minimum.

The system should be designed to provide scouring velocities greater than 2.5 fps at least two times a day to prevent corrosive effects and potential clogging from sludge accumulations.

For moorage pressure systems, the design peak flow will be dictated by the number of pumps on the system that operate

simultaneously, the rate of waste flow to the sump, the pumping characteristics, and the physical layout of the system. The pipe should be sized to pass the peak flow at a velocity greater than 2.5 fps but less than 10 fps.

The minimum size pipe, where more than one pump is connected, is 3 inches. This size is adequate for peak discharge rates up to 220 gpm. For rates greater than this, a larger diameter pipe is required.

Appendix B presents design curves to indicate number of pumps operating simultaneously for 99.9% of the time for multiple pump systems on the basis of number of pumps connected to the system, rate of inflow to the pump sump, and pump discharge rate. For example, a system with 50 pumps connected, a waste discharge of 100 gallons in an hour, and a pump discharge rate of 60 gpm would have no more than six pumps operating simultaneously for 99.9% of the time.

2. Swells, Waves, and Float Connections

To allow for unequal movements of one portion of the moorage walkway relative to the next, caused by swells, waves, or unequal loadings, lengths of flexible pipe should be used wherever one walkway joins another. This is illustrated by Figure 5.

The length of flexible pipe should allow for an elevation difference of 3 to 4 feet between adjoining walkways. There should also be no sags with the additional length made up in the form of a horizontal bend.

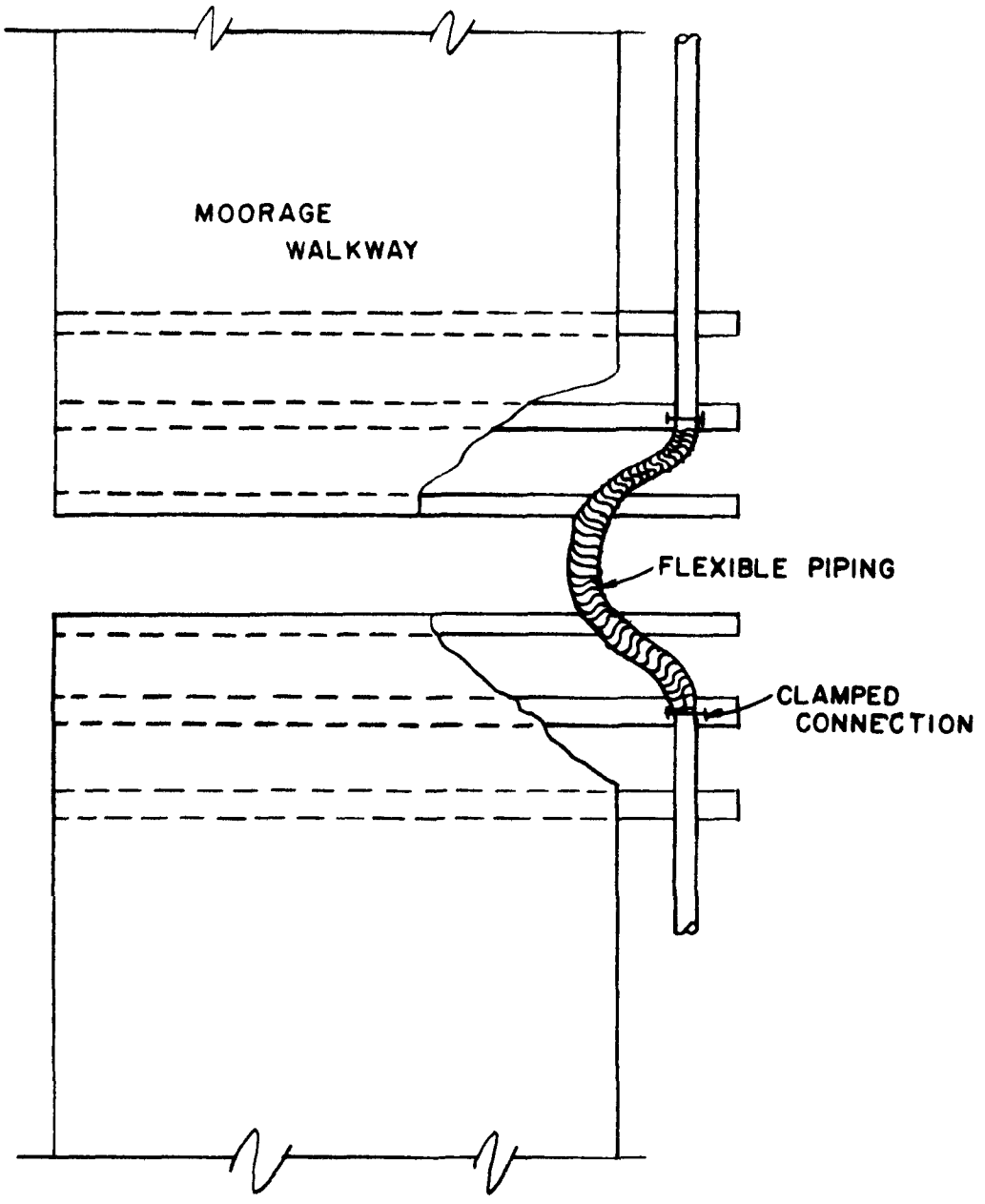

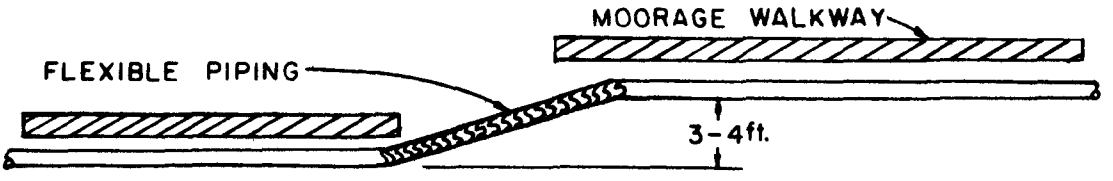

WALKWAY CONNECTIONS

3. Temperature Effects

Provision should be made to prevent freezing of the lines and to provide for expansion-contraction. The lowest one-day average temperature noted during 25 years of record at the U. S. Weather Bureau Portland Airport Station was -3 degrees F on February 2, 1950. The maximum recorded for this station was 107 degrees F on July 30, 1950.

The minimum temperature value should be used to calculate the amount of insulation necessary. Flexible connections between separate floats as described above will provide sufficient allowance for expansion and contraction if connection of the pipe to the moorage is such that the pipe can move within the connection.

4. Materials

The following materials have been accepted for use on houseboat moorages by the City of Seattle and would most likely be acceptable in Oregon and California as well:

a. Hewitt Robbins Flexible Pipes F55, F66*

b. White National Rubber Flexible Pipes CH22A, CH64A (Neoprene)*

c. Plastic (PVC) 160# Test (Solvent joint or rubber joint)

d. Cast Iron and Ductile Iron

e. Copper Class L

f. Transite (Water Pressure Type)

---

*Mention of products and manufacturers is for identification only and does not imply endorsement by the Federal Water Pollution Control Administration or the U.S. Department of the Interior.

Cost of material, labor for installation, and expected life will all vary considerably for these materials. Generally, plastic and cast iron are the cheaper with flexible pipes the more expensive. Concerning labor costs, flexible and plastic pipes would be cheapest with cast iron the most expensive; however, cast iron pipe is the most durable with plastic possibly the least.

The specific situation, which will vary considerably from moorage to moorage, will dictate the most economical choice of material. However, as a rough guide for estimating the cost of moorage collection systems installed, Figure 6 indicates the cost per houseboat per foot of moorage length for plastic and cast iron materials. An example on use of Figure 6 is given later in the report.

5. Houseboat Connection

A standard form of connection should be adopted by all morrages because of the mobility of the houseboats. It is suggested that where above water pressure systems are required, a standard 3"x3" 2-inch Tee or Wye with a 2-inch check valve be provided for each waste connection. A 2-inch stub from the check valve should be provided for a clamped flexible pipe connection to the houseboat sump. The clamped connection can be designed to provide a point of failure in the event the houseboat breaks loose from its mooring.

A minimum grade of 0.25 inch per foot should be maintained between the check valve and the 90 degree elbow on the discharge pipe of the sump with no sags or low spots in the connection. This method

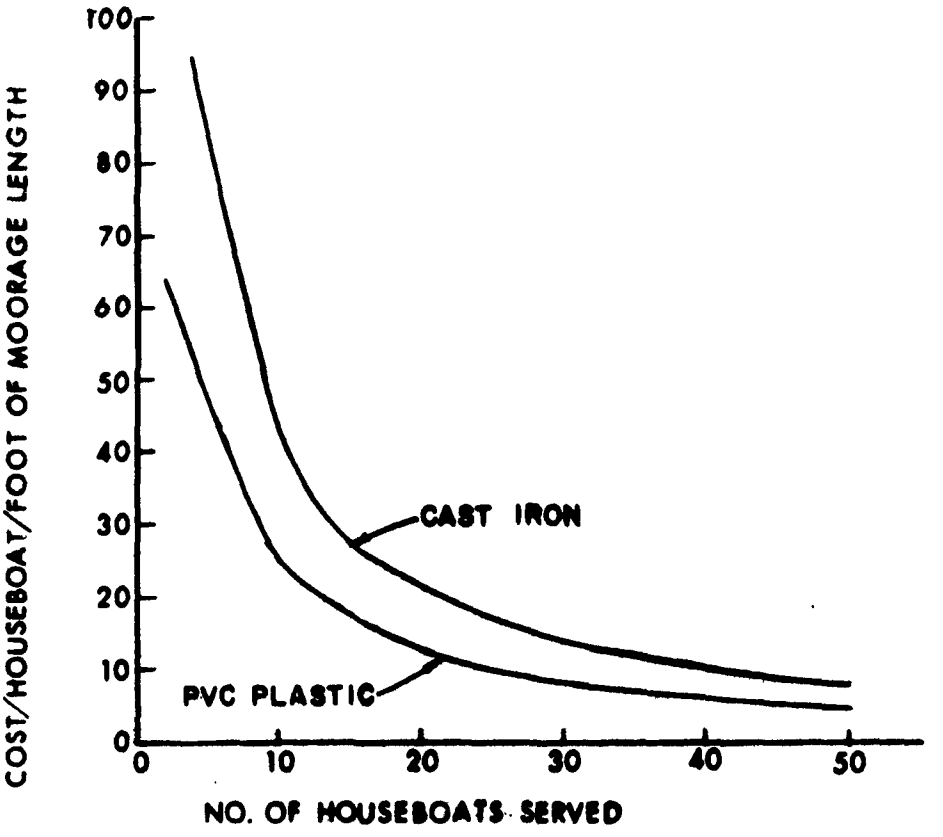

MOORAGE COLLECTION COSTS

FIGURE 6

of connection is illustrated by Figure 7 for a centrifugal-type sump. The same type of connection could be utilized for a pneumatic system.

B. Moorage Lift Stations

Central lift stations may be used in lieu of high head individual pumps at moorages that treat their wastes on shore in areas with water stage fluctuations greater than about 20 feet. If treatment is provided on the water or where water stage fluctuations are not as severe with maximum ranges between 10 and 20 feet, it will be possible to pump directly from the houseboat sump to a treatment facility or public sewer.

The following design criteria for moorage lift stations are suggested regarding location, construction, pump capacity, wetwell design, and estimated costs. An illustration of a typical installation is also presented.

1. Construction

The station should be located near the shore ramp to minimize piping and to be convenient for maintenance, operation, and electrical service. It should be firmly secured to the moorage walkway to reduce damage from float movement and be completely above water.

Figure 8 suggests a plan which would be applicable at most moorages. The station is supported by an auxiliary float and connected to the houseboat line and shore discharge line with flexible pipe. The shore discharge line could be a tubular hand rail along the ramp.

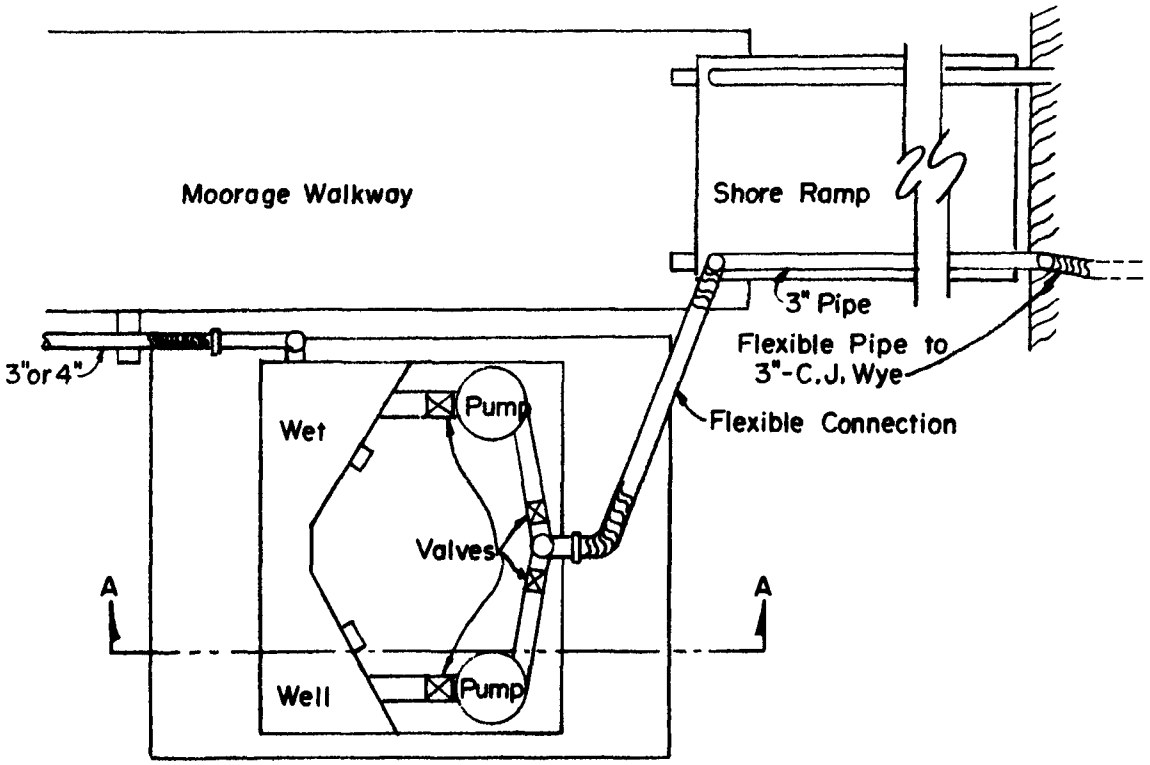

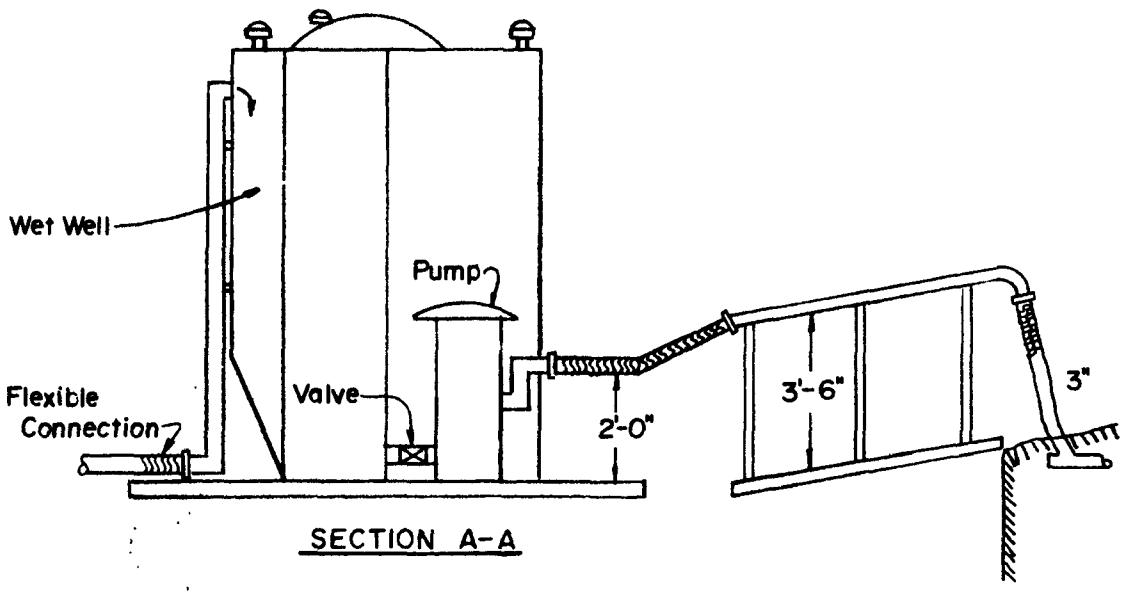

SECTION A-A

MOORAGE LIFT STATION

FIGURE 8

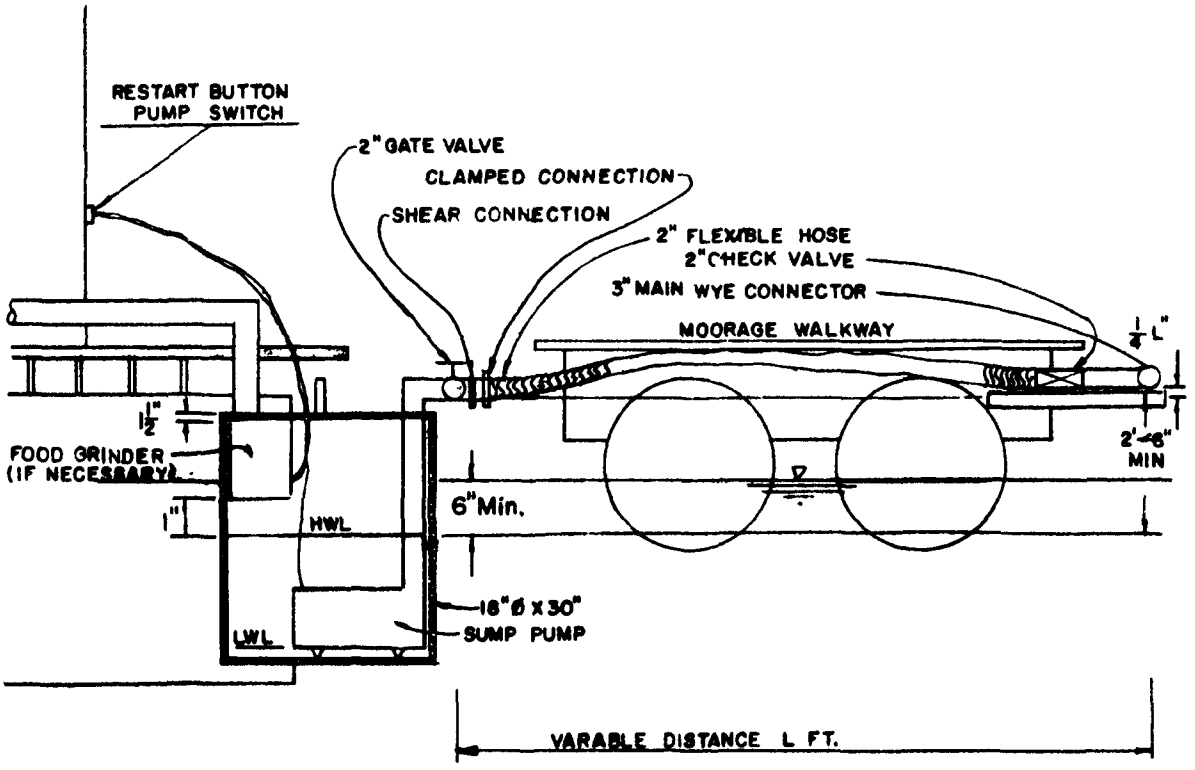

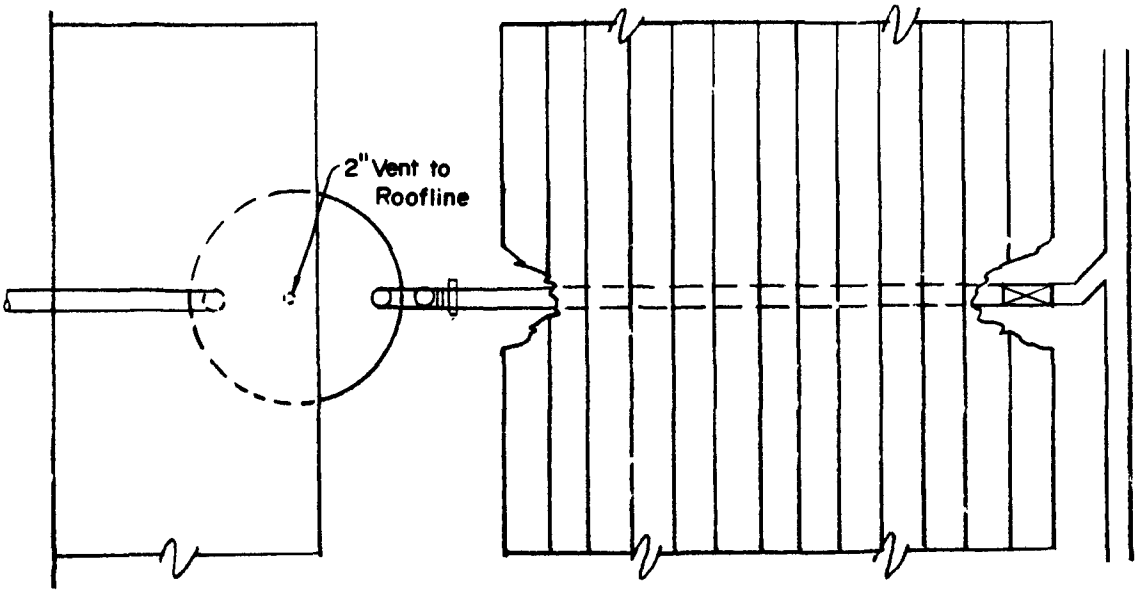

CENTRIFUGAL SUMP
PUMP INSTALLATION

Note that the inlet to the wetwell for the illustrated station is approximately 6 feet above the houseboat discharge main and 8½ feet above the maximum water level in the houseboat sump. With this static head, little or no throttling of the sump pump would be required. The float should be sufficiently large to support the weight of the station and provide stability against overturning.

2. Capacity

The minimum size discharge line from the pumps is 2 inches for a macerated or ground sewage and 3 inches for a raw sewage. Since the velocity of flow in the discharge pipe should be maintained between 2.5 and 10 fps, it follows that the pump capacity for a 2-inch discharge line should be at least 25 gpm at low river stage and a maximum of 98 gpm at minimum head or high river stage. For a 3-inch line the minimum is 55 and maximum 220 gpm.

Centrifugal pumps should be able to pass the maximum size solids expected for the system or severe clogging will result. For a raw uncomminuted sewage they should have a 3-inch solids handling capacity. However, solids would not be a major consideration and a less expensive pump could be used if the grinder, sump-pump combination, or toilets with macerator pumps are used.

3. Wetwell Design

Design criteria for construction of wetwells are available in a number of documents and are specified in state regulations. Essentially the only variable is the volume and this is considered below.

The selection of proper storage capacity is critical because it affects the time the sewage is retained in the station and the frequency of operation of the pumping equipment. ASCE Design Manual No. 37[6] suggests a wetwell size that, with any combination of inflow and pumping, the cycle of operation for each pump will not be less than 5 minutes and the maximum detention time in the wetwell will not exceed 30 minutes. Based on these criteria, a pump capacity of 75 to 125 gpm, and a rate of inflow varying from 200 to 900 gpd per houseboat, the following volumes are suggested for the lift station wetwell serving houseboats.

No. of Houseboats	Capacity Wetwell Storage, Gal.
1	20
2	30
3-7	50
8-15	100
16-30	150

The above figures are for total storage which is composed of the volume between high and low water levels, the dead storage or storage below low water, and freeboard volume.

4. Materials

The moorage owner has three alternatives in providing a lift station. He can purchase the components and fabricate the unit himself, have it built, or he can purchase a small package lift station ready for installation. Possibly with exception of the small moorages, the prefabricated package unit would be the most practical approach.

There are a number of package units on the market for both centrifugal and pneumatic systems that would find application as moorage lift stations. The prices vary significantly depending on the specific application, equipment needed, and manufacturer with an estimated price range from $2500 to $7000. Again, this is based on pumping uncomminuted sewage. If the waste is comminuted or solids removed by an incinerator toilet or other means, this price range could be reduced.

Additional details can be obtained directly from the manufacturers or their representatives regarding specific applications.

VI. TREATMENT

Wastes from all sources can be treated individually or on a group basis. With few exceptions it will be more economical to treat on a group basis.

Since most floating structures can travel through and/or reside on various classes of water, a minimum of secondary treatment or connection to a shore sewer is preferable and is generally required. Connection to shore sewers, wherever possible, should be required to consolidate waste treatment responsibility and regulatory control.

The remainder of this section discusses available treatment methods and estimated costs on both an individual and group basis.

A. Individual Methods

Individual treatment should be considered only when the source is isolated and would cause great expense to connect to a central system.

1. Macerator-Disinfecter Toilets

This method, as the name implies, macerates and disinfects the toilet waste before discharge. Operation of the macerator and addition of the disinfectant solution are generally automatically triggered by the flushing action of the toilet. These toilets can be either marine or standard type.

They have been shown[7] to effectively reduce coliform concentrations and provide some measure of organic removals when

operated properly. There is sone question, at present unanswered, as to the bacterial efficiency of these units due to the presence of sewage solids.

The average cost of these units, based on prices quoted from three different manufacturers, is approximately $100. Assuming an installation cost of $50, the total installed cost would be on the order of $150.

Macerator-disinfecter units have several disadvantages:

a. They do not provide secondary treatment.

b. These units are difficult to police to insure adequate operation and maintenance.

c. Use on board government vessels has demonstrated short life and periodic equipment repairs and replacement.

d. They do not significantly reduce solids concentrations nor provide a reduction in the degradable organic matter, and the bactericidal efficiency is questionable, and generally, unreliable.

e. Treatment is provided only for toilet wastes.

These units have received approval in a number of states for use on pleasure craft. However, for reasons mentioned above, they are not recommended for use in the houseboat problem.

2. Incinerator Toilets

These units provide complete gas incineration of toilet wastes to an inert ash. They use no water for flushing but can

handle up to a quart of liquid material. The combustion time is from 14 to 18 minutes, but the combustion cycle can be interrupted at any point for subsequent usage of the unit. Combustion vapors are vented to the atmosphere. Operation is completely automatic and the toilet becomes nonusable when it is not functioning properly. They use natural or LP gas and are ignited by 110 volts AC or a 12-volt DC battery.

The treatment efficiency of these units is complete with 100 percent removal of the sanitary waste. Like the macerator-disinfecter toilet, though, they provide treatment only for the toilet wastes or based on figures presented previously, only 33 percent of the total waste volume. Table 5 indicates the percent of the total household waste represented by the toilet wastes. This also would represent the percent efficiency of the incinerator toilets in removal of these parameters. This varies from a low of 23 percent total phosphate removal to a high of 100 percent NH_3-nitrogen removal. While this comparison is at best a gross one, it does indicate that incinerator toilets do not provide adequate treatment on a total household waste basis when secondary treatment is the desired standard.

The first cost of these units, not installed, runs from $300 to $500 depending on the type purchased and the extra features desired. There would also be the cost for gas and electricity but these operating costs are minimal. Installation of these units could be estimated at approximately $50 to $75.

TABLE 5

Comparison of Feces and Urine Waste Quantities to Total Household Wastes for a Family of 5 People

Parameter	Urine & Feces Contribution (8) gm/day	Total Household Contribution (1) gm/day	Percent Urine & Feces Contribution of Total
NH_3-Nitrogen	62.0	60	100
Total Nitrogen	65.0	76.5	85
Total PO_4	14.5	62.0	23
Grease or Total Fat	22	30.7	71
Total Solids	360	950	38

The primary advantages of these devices include: (1) complete removal of fecal and urine wastes, and elimination of most of the public health hazard from houseboat wastes; (2) low first cost and operation costs; (3) easy installation and maintenance, and (4) assured quality control if properly installed since there is no place for the waste to go if the unit is not operating. Adequate maintenance and operation are essential.

The primary disadvantages of the units, and it should be noted that these are undocumented, include: (1) odor problems, (2) questionable durability under continued long-term usage, and (3) less than secondary treatment is provided for the total household waste. Also, a relatively high cost is involved considering the degree of treatment provided.

It is expected that these units may find application on facilities with only toilet wastes such as certain boathouses, public restrooms, and certain commercial establishments or they may be used for interim treatment.

3. Individual Aerobic Treatment with Disinfection

This method consists essentially of a tank with 24 hours retention time, artificial aeration, solids settling and return, and chlorination of the effluent before discharge. It is a simple system in principle but like any biological system, sensitive to proper operation.

There is only one unit presently known to be on the market suitable for individual application. This varies in size from 750 gpd to 1,250 gpd.

The efficiency of this unit with proper installation and maintenance is on the order of 75 to 85 percent organic removal and would be acceptable as secondary treatment.

For the individual houseboat the smallest unit is actually oversized, providing 750-gpd capacity when 200 to 400 gpd would be sufficient. This would not impair its efficiency but does suggest the need for a smaller sized unit.

The cost of a 750-gpd unit is approximately $1000 delivered to Portland, Oregon. To this would be added cost of chlorinator, flotation, corrosion protection, and installation estimated at $800, and the total cost would be on the order of $1800.

Operation and maintenance of the unit relative to non-biological forms of treatment are considerably greater both from a time and money standpoint.

4. Shore Treatment

If the wastewater from the individual houseboat is pumped to shore for treatment, there are two alternatives. These include connection to a public sewer or to a septic tank with absorption field, provided soil conditions permit. Other methods such as holding tanks and extended aeration units are cheaper to use on the water.

Each of these alternatives has been investigated and it appears that the most practical is to pump the wastes to a public sewer. This would cost approximately $800 to $1000. If no public sewer is available, the next approach would be to pump the wastes to a septic tank with absorption field or seepage pit on shore. The area required for the field or pit can be determined from Table 6. It is estimated that a system such as this would cost on the order of $1100, installed. If land is unavailable or if soil characteristics do not permit the use of an absorption field, an extended aeration type plant would be necessary for treatment on the water (a shore-based facility would be more expensive than providing a floating unit).

B. Group Methods

In instances where connection to a public sewer cannot be made, moorages and houseboat owners will have to provide their own treatment.

The alternative process discussed here meet State requirements. They include a floating or shore-based extended aeration unit or a settling unit with chlorination to be replaced by sewer connection or secondary process at some designated date in the future. Each of these methods with illustrated applications is presented.

TABLE 6

Soil Absorption Areas Required for Single Houseboats for Various Percolation Rates(1)

Percolation Rate min.	Absorption Area(2) Using Recirculating Toilet, $ft.^2$	Absorption Area(3) For Total Houseboat Waste $ft.^2$
1 or less	20	45
2	30	70
3	35	80
4	40	90
5	45	100
10	65	150
15	80	180
30(4)	115	260

(1) Table based on allowable sewage loadings presented in Manual of Septic Tank Practice, U.S.P.H.S., No. 562, 1957.

(2) Based on flow of 100 gpd per houseboat

(3) Based on flow of 225 gpd per houseboat

(4) Not suitable for seepage pit

1. Extended Aeration

Packaged extended aeration units are available from a number of manufacturers in a size range suitable for a moorage treatment system. Information on facilities which can be modified at a reasonable cost for flotation if desired, can best be obtained through direct contact with a manufacturer.

Figure 9 illustrates the estimated installed costs of a floating extended aeration treatment facility for various sized moorages on a per houseboat basis. The cost per houseboat decreases significantly as the size of moorage or number of houseboats served increases. For example, the cost per houseboat for serving one houseboat is $1800 while the cost per houseboat for serving 50 houseboats is $200. This curve is based on typical prices for a floating treatment facility. The cost for a unit installed on shore would be less and would be recommended in areas with pumping heads on the order of 10 to 20 feet. In high head areas such as the Portland, Oregon, area, it would be more economical to float the treatment facility with the moorage.

The major disadvantage to the packaged extended aeration unit is the degree of competence required for efficient operation. Like any biological system it is sensitive to a number of parameters and unless these are understood by the operator, changes can upset the balance in operation considerably. Also, the annual costs of operation are high due to power requirements, and maintenance labor.

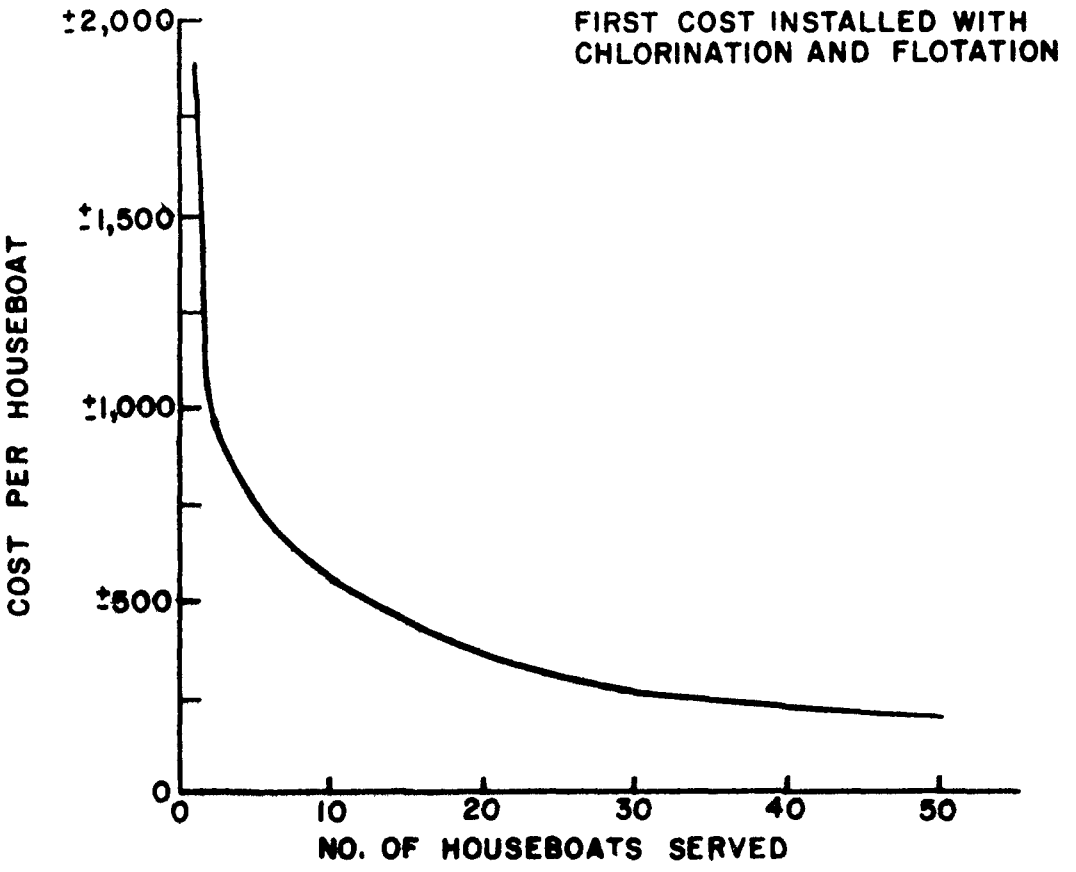

EXTENDED AERATION
TREATMENT COSTS

FIGURE 9

If these units are used, it is recommended that a service agreement from the manufacturer or other reputable servicing firm be obtained.

Figures 10 and 11 illustrate typical examples of how and where floating extended aeration facilities could be used.

2. Settling Tank and Chlorination

This method of treatment will not provide the degree of efficiency normally required but might be adequate as the first step in a stage treatment scheme which would lead to secondary treatment.

For the raw houseboat waste, the process would include a settling tank constructed with a sludge draw off standpipe. The effluent would be chlorinated before discharge.

The settling tank should be designed on the basis of less than 600 gpd/ft^2 of surface area and provide a minimum of 2 hours retention of the design flow. The design flow should be the 16-hour daily average or 95 gpcd. The bottom of the tank should be sloped at least 2:1 to the sludge draw off pit, and the chlorine contact chamber should provide a 15 minute contact time on the basis of the design flow. If recirculating or incineration toilets are used on the houseboats, the design flow can be reduced to 70 gpcd and if no laundry facilities are permitted it can be further reduced to 50 gpcd.

Figure 12 illustrates a typical design which utilizes a 500 gallon septic tank modified as shown, a 55-gallon barrel with portable chlorinator, all supported by a wood float over styrofoam

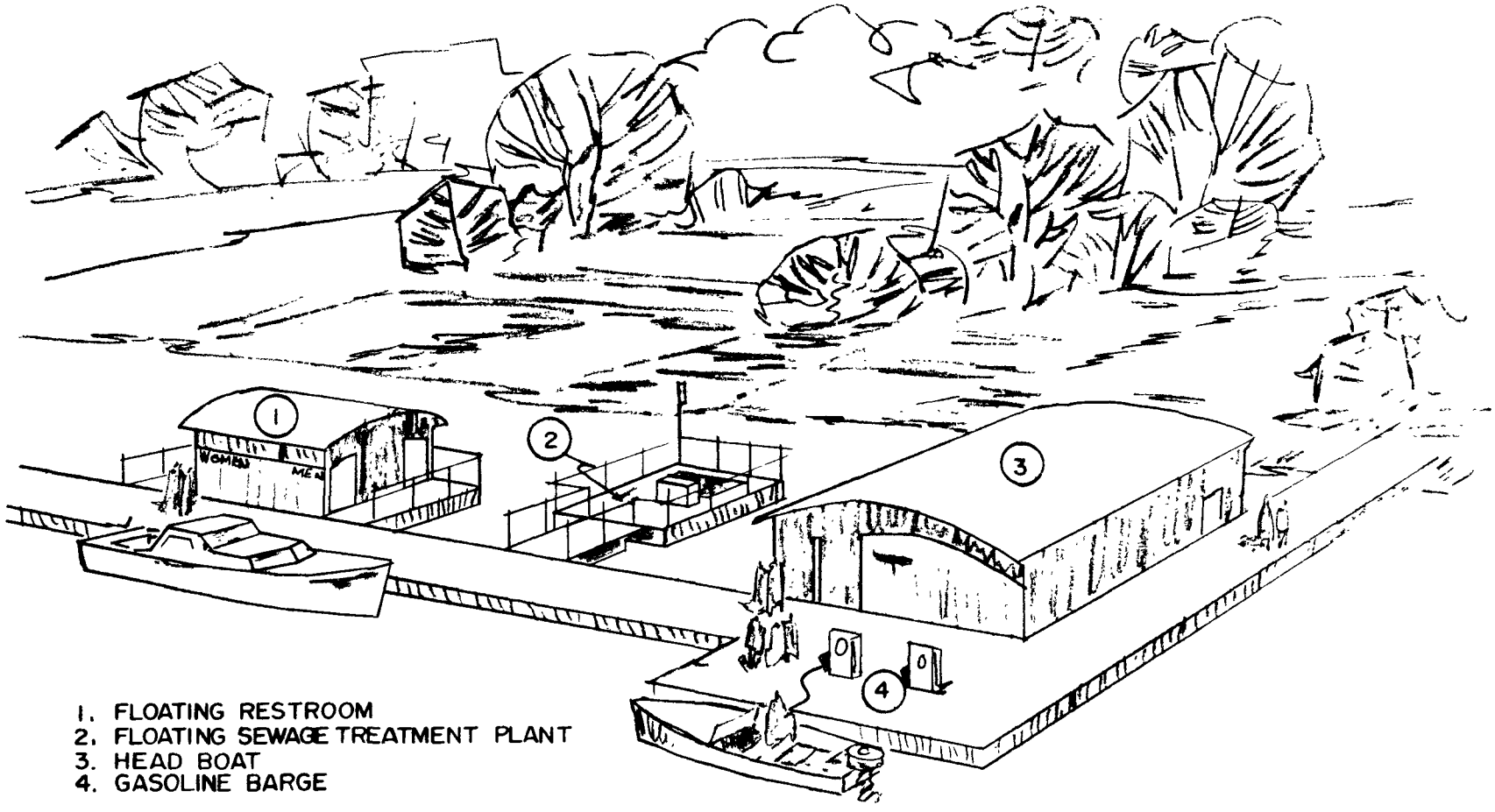

FLOATING RESTROOM & SEWAGE TREATMENT PLANT USED IN CONJUNCTION WITH BOATING & OTHER MARINE ACTIVITIES

FIGURE 10

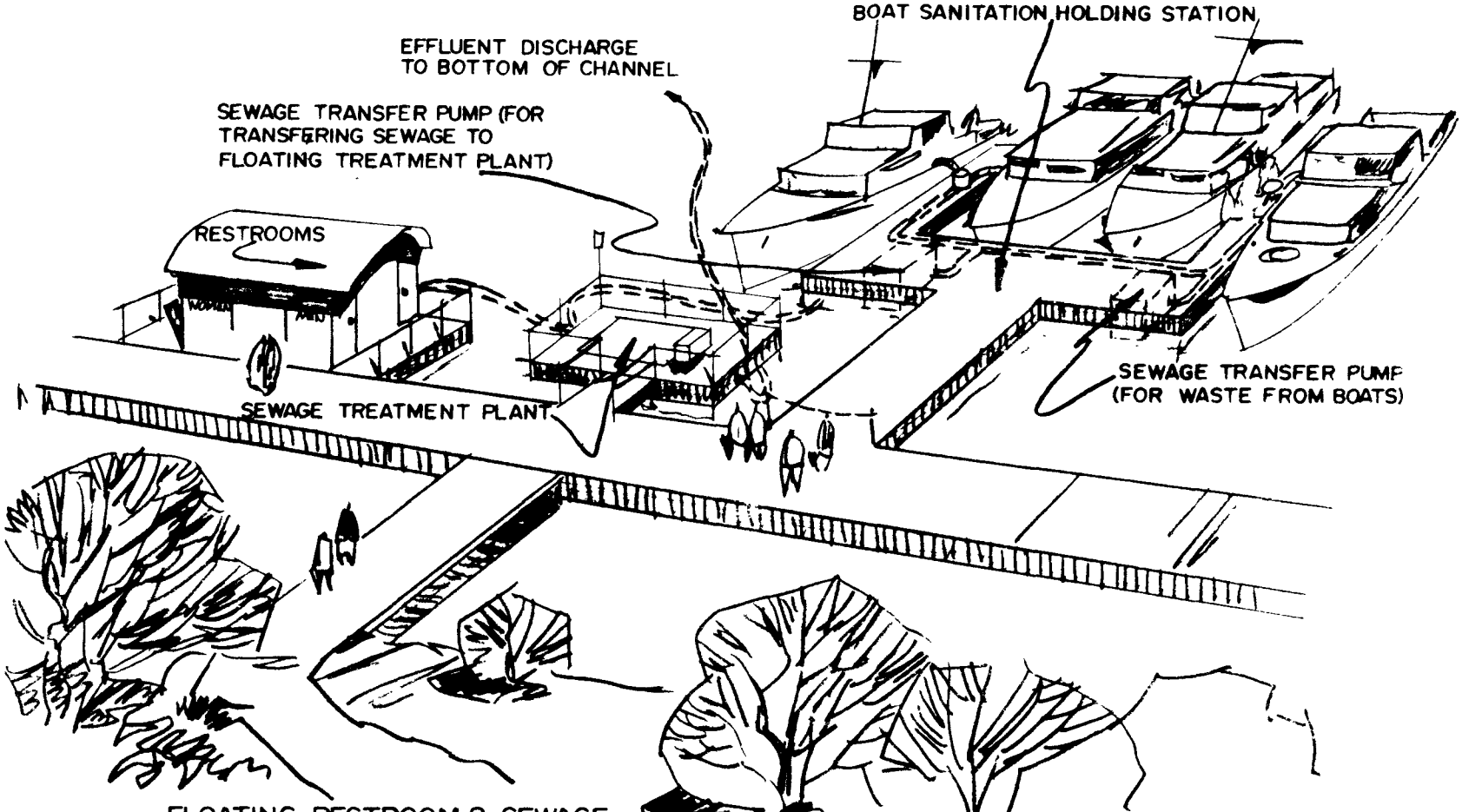

FLOATING RESTROOM & SEWAGE TREATMENT PLANT USED WITH A BOAT HOLDING STATION EVACUATION SYSTEM

FIGURE 11

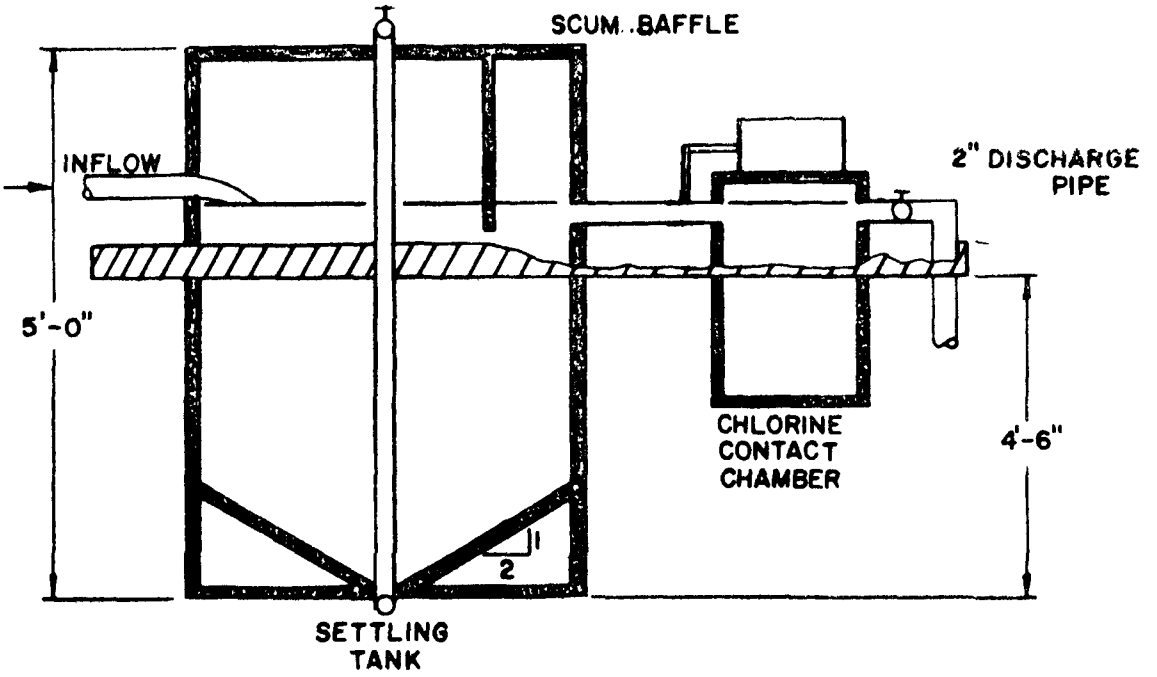

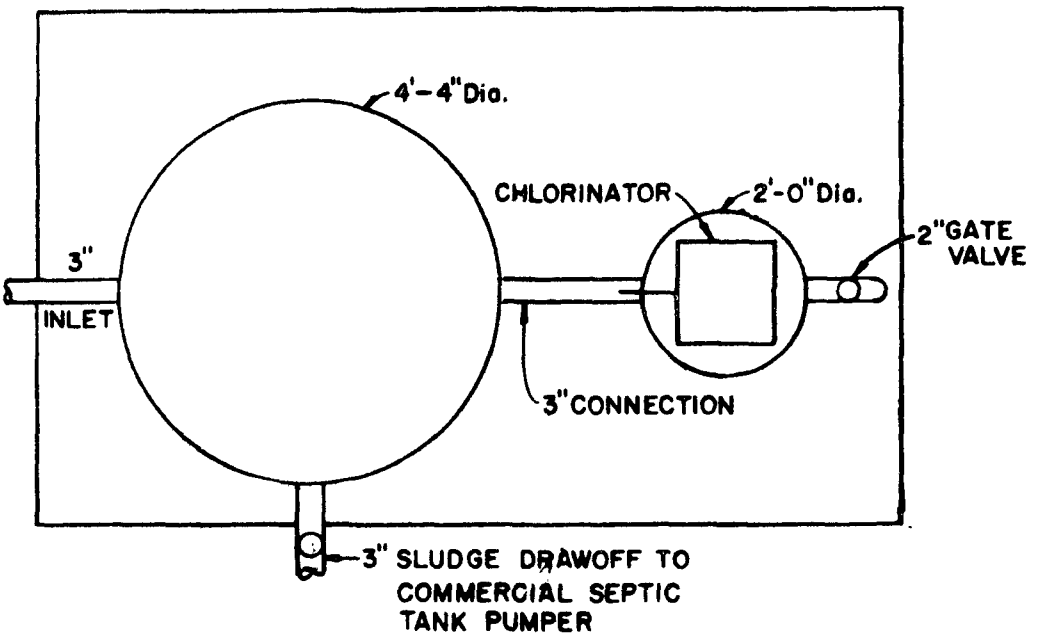

SETTLING TANK & CHLORINATION TREATMENT

cylinders. All metal surfaces would be covered with an asphalt, epoxy, or other approved coating. This design uses standard, off-the-shelf equipment and could be fabricated, excluding labor, for approximately $500 to $700. It would be sufficient in size to handle up to 35 houseboats using recirculating toilets. Without recirculating toilets, 25 houseboats could be connected. This unit could later be salvaged for use in construction of a lift station when sewers become available. The use of plastic or fiberglass materials for the settling tank and contact chamber could be weight saving. The cost of this material would be somewhat higher but this may be off-set by savings in float requirements and installation time.

VII. EXAMPLE DESIGN

The following design is presented to illustrate method of design, equipment application, alternatives for treatment, and cost estimates. It should be emphasized that these costs are only estimates and could change significantly with different equipment and labor costs.

In the design of this system, three alternatives are considered:

1. Centrifugal pumps at each houseboat that pump to a central lift station on the moorage which in turn lifts the waste to a Portland city sewer.

2. Centrifugal pumps at each houseboat with capacity to pump directly to shore to a Portland city sewer.

3. Pneumatic ejectors at each houseboat that pump to a floating package plant.

Each alternative is discussed below. The basic scheme for the system design in plan and profile is shown on Figure 13.

A. Basic Design Criteria

The moorage is assumed to accommodate 18 houseboats with no future expansion considered. A total of 35 people live on the houseboats.

The average 24-hour flow is 75 gpcd, and the average 16-hour flow is 95 gpcd. The maximum rate of waste flow expected from a houseboat is 50 gallons in an hour.

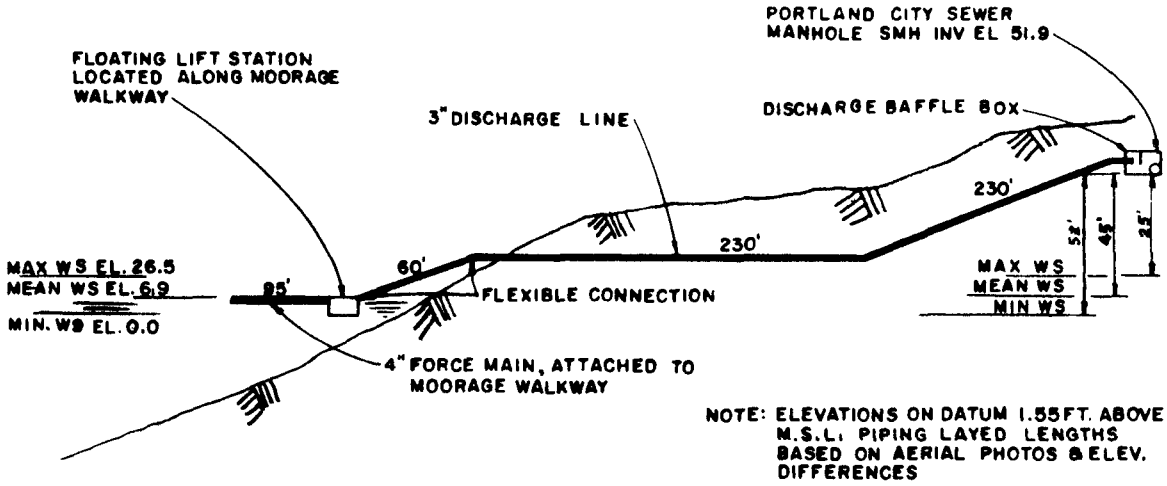

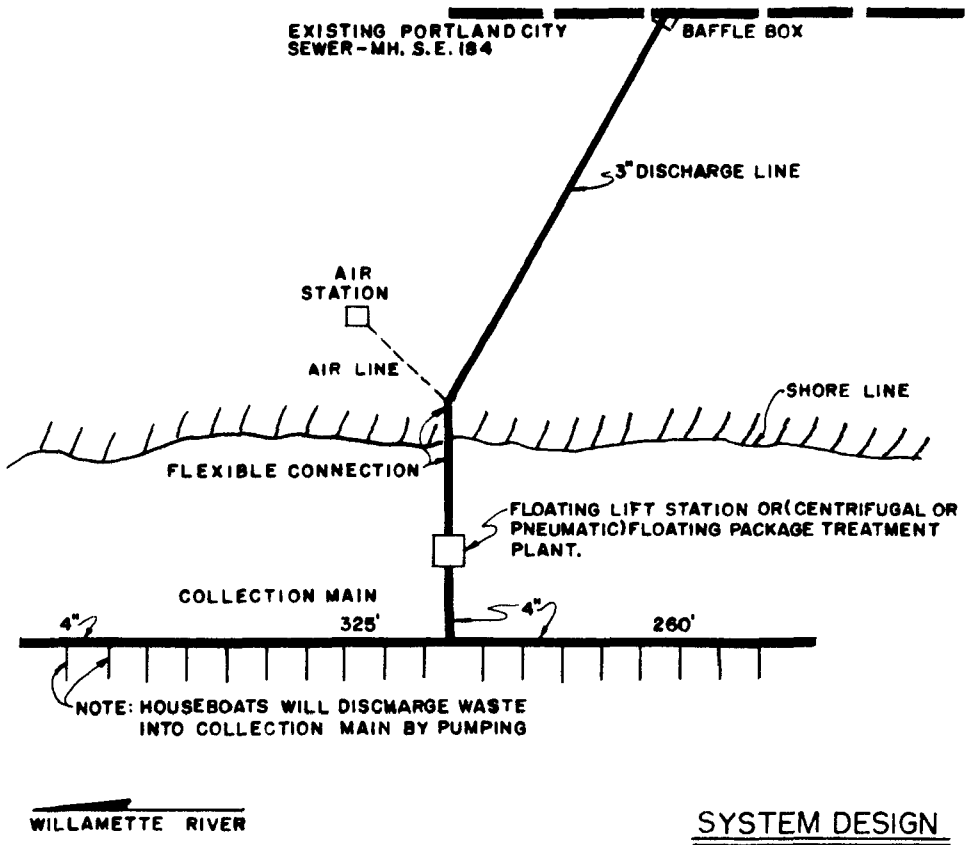

SYSTEM DESIGN

FIGURE 13

The average organic loading per person is 0.25 pound of 5-day biochemical oxygen demand (BOD) per day on the basis of data presented in Table 1.

A minimum velocity of 2.5 fps and a maximum velocity of 10 fps will be used to size the force mains.

A wetwell capacity of 150 gallons will be used as indicated earlier.

B. Layout and Cost Estimates

Each of the three alternatives is discussed in two schedules on the basis of financial responsibility--that of the houseboat owner and that of the moorage owner. Cost estimates are given for each alternative.

1. Alternate A

This alternate calls for houseboat plumbing, centrifugal pumps at each houseboat, a moorage collection system, a lift station, and a discharge force main with baffle box for connection to a city sewer.

a. Schedule 1

This schedule is composed of plumbing, provision of houseboat pump units, and connection to the moorage system. It will be the responsibility of the houseboat owner.

Houseboats were assumed to be plumbed with copper materials by a licensed plumber in accordance with the plan presented by Figure 2.

Packaged submersible centrifugal pumps in 18"x30" cast iron sumps were used at each houseboat and attached in a manner similar to that illustrated by Figure 3.

The grinder mechanism for macerating sewage solids was not considered necessary as the total lift between the high water level in the sump and the discharge point to the wetwell was in excess of 5 feet which is the minimum operating head for the pump.

The normal operating range of the houseboat pumps would vary, depending on the number of pumps operating simultaneously, from 110 to 90 gpm. The corresponding maximum flow in the collection system which may be exceeded 0.1 percent of the time, would be 270 gpm.

Each houseboat pump unit will be connected to the moorage system with a length of 2-inch flexible hose of a type mentioned previously. The hose will be clamped on both ends with sufficient strength to hold under normal stresses but such that it will fail first in the event the houseboat breaks from its mooring.

Estimated costs for plumbing and the pump units are based on figures reported previously, plumbing at $560 per houseboat and the pump units including installation at $325 per houseboat. The cost for making the moorage connection is estimated at $50 per houseboat. The total first cost then to each houseboat owner would be $935.

b. Schedule 2

This schedule includes the moorage collection system, the lift station, and the shore discharge line with baffle box. It

would be the responsibility of the moorage owner to provide this system.

The moorage collection system to the wetwell of the lift station was designed of 3-inch Schedule 40 PVC pipe. This size pipe requires an average flow of 55 gpm and is adequate for flows up to 240 gpm. The peak flow would actually be 270 gpm but the difference was not considered significant enough to warrant the use of 4-inch pipe. The line is supported at 5 foot intervals with devices that allow the pipe to contract and expand. A 5-foot long, 3-inch flexible hose connection was made every 100 feet and/or at every walkway division. A standard connection with 3"x3"x2" tees and a 2-inch check valve was provided for every houseboat. Insulation of the pipe was not considered necessary on the basis of heat transfer calculations for extreme temperatures. The weight of the collection system is less than 2 pounds per foot and no additional flotation was considered necessary.

A package lift station built in accordance with State requirements was selected with dual nonclog sewage pumps. To reduce head loss and pump capacity, a 4-inch PVC Schedule 40 discharge line was used. Pumps with a capacity of 100 gpm at a head of 50 feet were satisfactory for use in the lift station.

It was calculated that the station would support itself with no additional buoyancy at a depth of 3.5 feet when empty. The auxiliary float was designed only to support the weight of sewage in the wetwell before pumping and the weight of

two men. The float will also give the station stability against overturning.

The force main from the lift station to the shore sewer is of 4-inch Schedule 40 PVC pipe. The shore connection is similar to that indicated by Figure 8 with a 5-foot length of 4-inch flexible hose connecting the lift station to 4-inch PVC pipe attached to the 60-foot long ramp. A 10-foot length of 4-inch flexible hose is used to connect the shore side of the ramp to the 4-inch PVC main on shore. The line on shore is laid in trench and backfilled. A baffle box is used to dissipate the velocity head before discharge to the sewer manhole.

The estimated cost of the moorage collection system is based on data presented in Figure 6 for the PVC system. This cost, for 18 houseboats, is $0.138 per houseboat per foot of moorage length. For the example moorage with a total length of 680 feet to the lift station the cost would be $1700.

The lift station cost with auxiliary float is estimated at $3600 installed. This cost is based on typical material and labor costs for the Portland, Oregon, area.

The discharge force main of 4-inch PVC Schedule 40 pipe with an energy dissipating baffle box is estimated to cost $1500 for materials and $700 for labor for a total cost of $2200.

The total cost to the moorage owner for Alternate A is $7500.

2. Alternate B

This alternate calls for individual centrifugal pumps at each houseboat with capacity to pump directly through a moorage system to a shore sewer.

a. Schedule 1

Under this schedule are the houseboat plumbing and the individual pump units.

Plumbing would be the same as discussed previously and the estimated cost would be $560 per houseboat.

Each pump unit to pump ashore will require capacity to pump against a 51.9 foot head plus system losses. To minimize head losses and reduce the pump size, a 4-inch collection system is required. With a 4-inch collection system and discharge main, a 1-hp pump with a capacity of 100 gpm at a head of 50 feet can be used. Each unit would be connected as discussed previously.

The estimated cost for each pump unit is $950, installed, plus an additional $50 for the moorage connection. The total cost for each houseboat would be $1560 for this alternate.

b. Schedule 2

This schedule would be the same as that discussed under Schedule 1 with the exception that a lift station would not be required and a 4-inch collection system would be required rather than a 3-inch system. The total estimated cost to the moorage owner for this schedule would be $4600, installed.

3. Alternate C

This alternate calls for pneumatic ejectors at each houseboat that pump to a central floating treatment plant.

a. Schedule 1

Plumbing is the same as discussed earlier with an estimated cost of $560 per houseboat.

The pneumatic ejector units are complete packaged units sized for an individual household. The total pumping head is less than 10 feet and a low pressure ejector is utilized. The estimated cost for the ejector is $800 installed. There would be an additional charge of $50 for the connection to the moorage system.

The total cost to the houseboat owner for this schedule is $1410.

b. Schedule 2

For this alternate the moorage owner would have to provide a moorage collection system and a floating treatment facility.

The moorage collection system would be the same as that discussed under Schedule 2, Alternate A, with an estimated cost of $1700.

The cost for the floating treatment facility was estimated on the basis of data provided in Figure 9. This estimates a cost of $7000 or $390 per houseboat.

The total cost to the moorage owner for Alternate C is $8700.

4. Summary

Costs for the three alternatives are summarized in Table 7.

Alternate A is the least expensive method for the houseboat owner but involves a greater cost for the moorage owner. Centrifugal pumps, with their inherent difficulties in pumping raw sewage are also a disadvantage. Alternate B is the least expensive for the moorage owner but the most expensive for the houseboat owner. It also involves the use of centrifugal pumps for raw sewage and large expensive pump installations at each houseboat. Alternate C is expensive for both the houseboat owners and the moorage owners. Pneumatic ejectors, though, would provide dependable nonclog service and possibly in the long run be more economical.

The floating treatment facility on the other hand may prove to be much more expensive than the first cost indicates because of annual operation and maintenance costs.

It should also be remembered that the costs presented in Table 7 do not represent annual costs but simply the first cost for capital investment. Annual operation, maintenance, replacement, and financing costs may present an entirely different outlook and should be considered before deciding on any one method.

TABLE 7

COST SUMMARY

Schedule	Alternate A	Alternate B	Alternate C
1--Houseboat Cost			
Plumbing	$ 560	$ 560	$ 560
Sump, pump & connection	375	1000	850
TOTAL COSTS	$ 935	$ 1560	$ 1410
2--Moorage Cost			
Collection System	$ 1700	$ 2400	$ 1700
Lift Station	3600	-	-
Force Main & Baffle Box	2200	2200	-
Floating Treatment	-	-	7000
TOTAL COSTS	$ 7500	$ 4600	$ 8700

VIII. BIBLIOGRAPHY

1. Watson, K. S., Farrell, R. P., and Anderson, J. S. "The Contribution from the Individual Home to the Sewer System." Paper presented before annual WPCF Meeting, September 1966.

2. Manual of Septic Tank Practices. Public Health Service Publication No. 526, 1957.

3. "The Effect of Industrial Wastes on Sewage Treatment." New England Interstate Water Pollution Control Commission, June 1965.

4. Babbitt, R. E. Sewerage and Sewerage Treatment. 6th ed. John Wiley and Sons, Inc., 1949.

5. Pierce, J. W. "Plastic Pipe--A Progress Report." Civil Engineering, ASCE, February 1967.

6. Design and Construction of Sanitary and Storm Sewers. ASCE Manual of Practice No. 37, 1960.

7. "Evaluation of Marine Toilet Chlorinator Units." by Syracuse University Research Corporation for New York State Health Department. Report No. 9, May 1962.

8. Sunderman, F. W. and Bociner, F. "Nutritional Values in Clinical Medicine." p. 260. W. B. Saunders and Co., 1959.

9. Personal communication with Dr. Donald Guthrie, Associate Professor of Mathematics at Oregon State University, Corvallis, Oregon.

10. Cox, D. R. and Smith, W. L. Queues. John Wiley and Sons, Inc., 1961.

IX. APPENDIX

APPENDIX A

Plumbing Costs for Three Houseboats in Seattle, Washington

UNIVERSITY PLUMBING & HEATING CO.

CONTRACTORS

5941 UNIVERSITY WAY N.E. · P.O. BOX 38 · PHONE ME 5-9000

SEATTLE, WASHINGTON 98105

DATE October 10 19 66

SOLD TO · Terry Pettus
2035 Fairview Ave. East
Seattle, Washington 98102

TERMS: CASH UPON COMPLETION OF WORK | JOB NO. Gus 1840 | P.O. NO.

2339 Fairview Ave. E.
Rorough wastes, vents and water for houseboat

LABOR	9/14	9/21	9/28	TOTAL	RATE	TOTAL
Kattleman	11	1	1½	13½	7.30	98.55
Peterson	7	1		8	7.30	58.40

Labor	156.95
Material	181.05
Permit	3.75
	341.75
Overhead 15%	51.26
	393.01
Fee 10%	39.30
	432.31
Sales Tax	18.16
	450.47

ORIGINAL COPY

PLUMBING HEATING

UNIVERSITY PLUMBING & HEATING CO.

VENTILATION INDUSTRIAL PIPING

CONTRACTORS

3941 UNIVERSITY WAY N.E. · P.O. BOX 38 · PHONE ME 2-9000

SEATTLE, WASHINGTON 98105

DATE October 11, 19 66

SOLD TO
Dan Brackett
2818 Boyer East
Seattle, Washington

TERMS: CASH UPON COMPLETION OF WORK Our JOB NO. 1919 P.O. NO.

Rerough wastes, vents and water for house boat

LABOR	9/14	RATE	TOTAL
Kettleman	18	7.30	131.40

Labor	131.40
Material	191.57
Permit	3.75
	326.72
Overhead 15%	49.01
	375.73
Fee 10%	37.57
	413.30
Sales Tax	17.36
	430.66

ORIGINAL COPY

PLUMBING HEATING

UNIVERSITY PLUMBING & HEATING CO.

VENTILATION INDUSTRIAL PIPING

CONTRACTORS

5941 UNIVERSITY WAY N.E. · P.O. BOX 99 · PHONE ME 3-9000

SEATTLE, WASHINGTON 98105

DATE October 7 1966

SOLD TO . Simons
2818 Boyer Avenue East
Seattle, Washington 98108

TERMS CASH UPON COMPLETION OF WORK Our JOB NO. 2047 P.O. NO.

Rough In

LABOR	9/21	9/29	TOTAL	RATE	TOTAL
Kattleman	7	1½	8½	7.30	60.23
Peterson	7	1½	8½	7.30	60.23

Labor		120.46
Material		172.17
Permit		3.00
		295.63
Overhead	15%	44.34
		339.97
Fee	10%	34.00
		373.97
Sales Tax		15.71
		389.68

ORIGINAL COPY

APPENDIX B

Design Curves for Multiple Pump Systems

DESIGN CRITERIA FOR MULTIPLE PUMP SYSTEMS

Moorage collection systems with a number of pumps connected in parallel should have adequate capacity for the maximum probable number of pumps operating simultaneously. To determine the probable maximum number for various size moorages, queuing theory was employed to relate pertinent design parameters which include:

1. Number of pumps connected to system.
2. System head characteristics.
3. Rate of sewage inflow.
4. Pump head-capacity characteristics.
5. Rate of pumping.

A relationship developed by Guthrie[9] and Cox[10] for indicating the proportion of time or probability that any number of pumps in various sized systems operate simultaneously is given by equation 1.

$$P_j = P_o r_j \qquad (1)$$

where

$$P_o = \left(\sum_{j=o}^{N} r_j\right)^{-1} \qquad (2)$$

$$r_j = 1 \text{ for } j=o$$

and

$$r_j = \frac{(N(N-1)\ldots(N-j+1)}{(\quad j! \quad)} \left(\frac{I}{o}\right)^{j} \text{ for } 1 \leq j \leq N \qquad (3)$$

N = number of pumps connected to the system

I = rate of inflow to the pump sump, gallons per minutes (gpm)

O = pumping rate, gpm

P_j = proportion of time or probability that j pumps are in operation where j varies fron o N

For general use a family of curves was prepared for P_j by varying the number of pumps connected to the system from 0 to 50, the rate of inflow from 50 gallons per hour (gph) to 200 gph and the pumping rate from 120 to 30 gpm. These curves are given in Figures 14 and 15. The indicated number of pumps operating simultaneously would cover over 99.9 percent of the time; i.e., there would be a 0.1 percent chance that the indicated number of pumps operating would be exceeded.

It should be remembered when using the curves that the average 24-hour houseboat waste flow is less than 200 gallons and the average pumping rate would be on the order of 60 to 100 gpm.

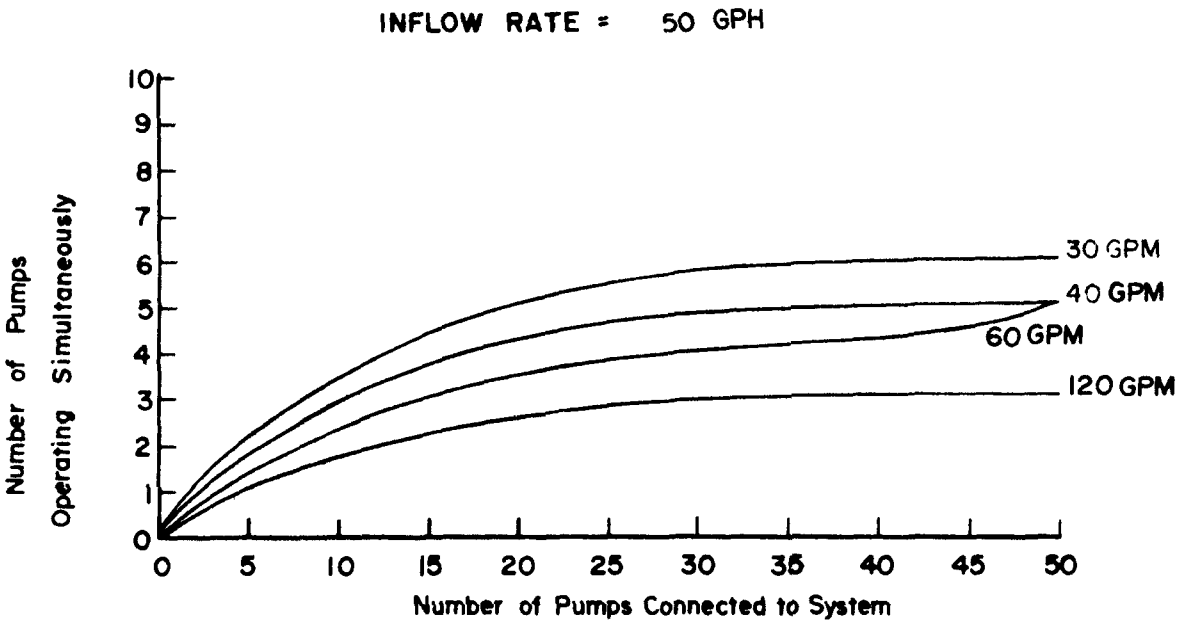

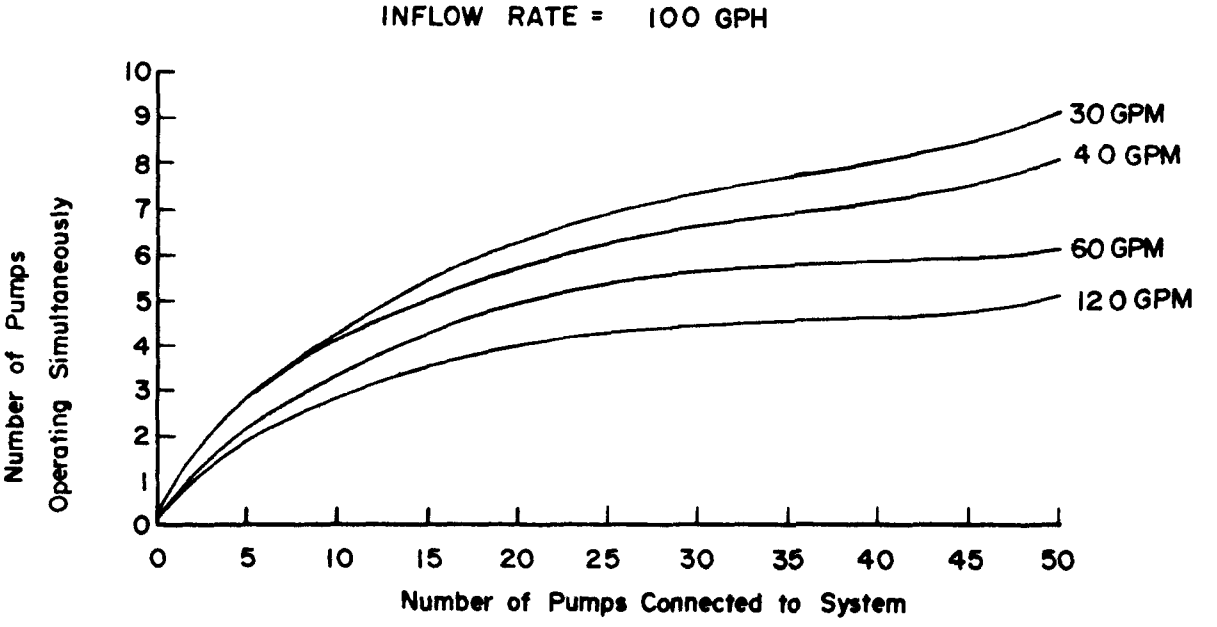

DESIGN CURVES FOR MULTIPLE PUMP SYSTEM FOR VARIOUS INFLOW RATES AND PUMPING RATES

FIGURE 14

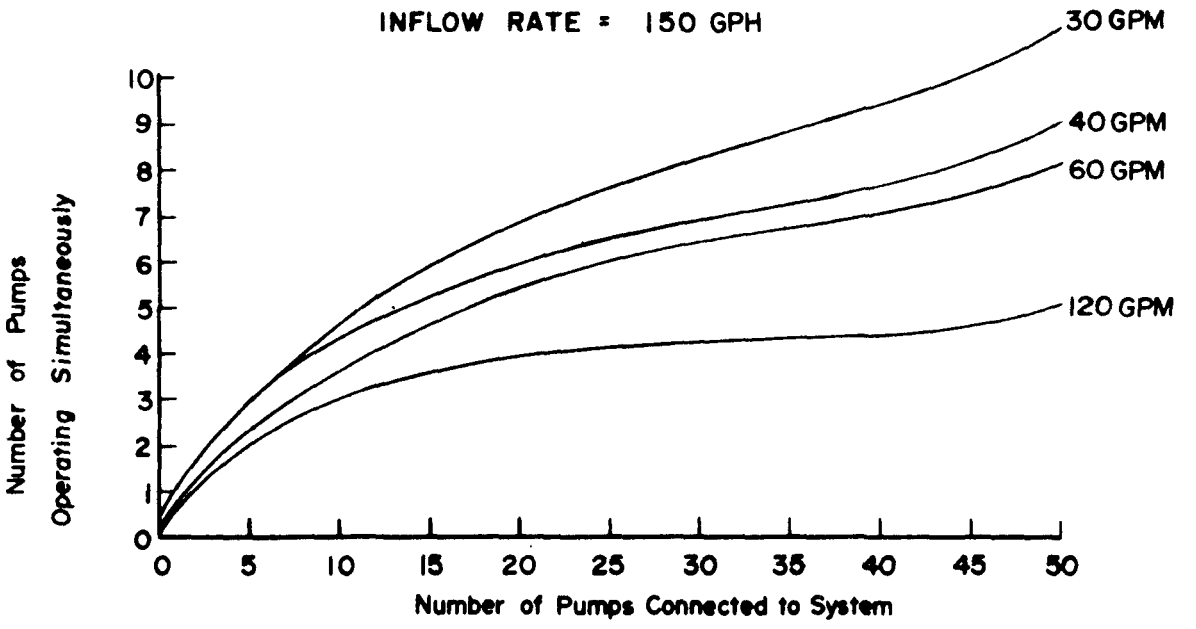

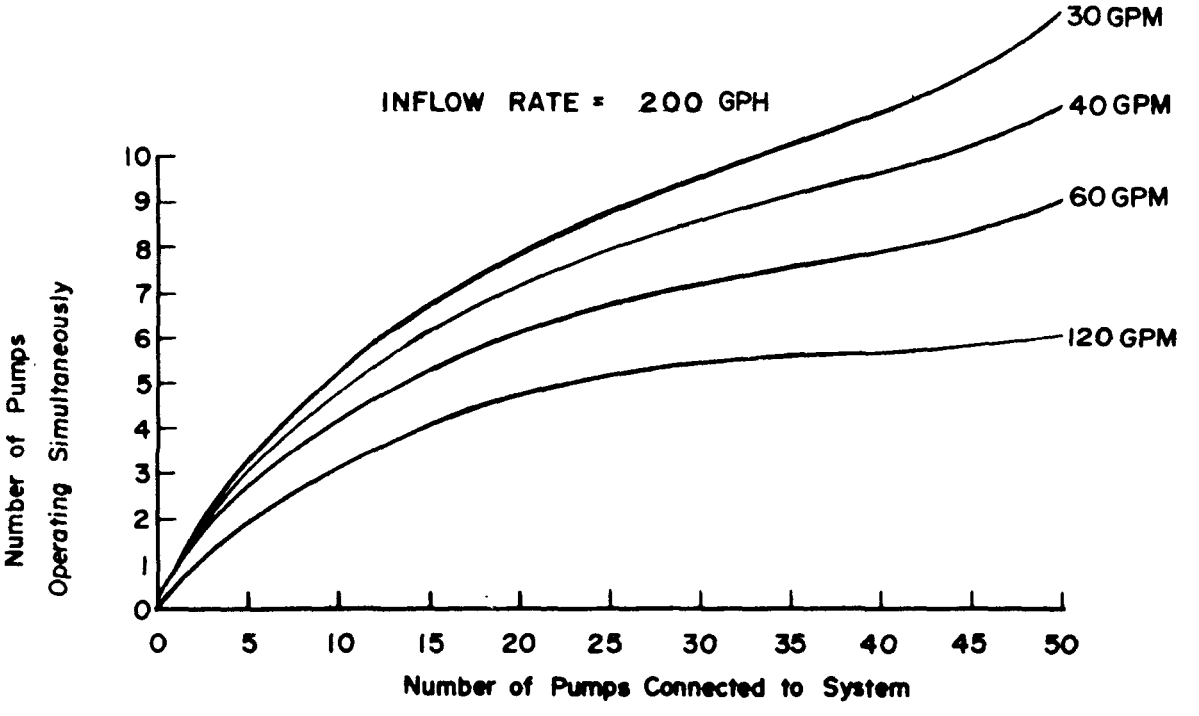

DESIGN CURVES FOR MULTIPLE PUMP SYSTEM FOR VARIOUS INFLOW RATES AND PUMPING RATES

FIGURE 15