EPA-600/8-83-003
April 1983

POLLUTION CONTROL TECHNICAL MANUAL

FOR

TOSCO II OIL SHALE RETORTING WITH UNDERGROUND MINING

Denver Research Institute
University of Denver
Denver, Colorado 80208

Cooperative Agreement
CR 807294

Program Manager: Gregory G. Ondich
Office of Environmental Engineering and Technology (RD-681)
U.S. Environmental Protection Agency
401 M Street, SW
Washington, DC 20460

Project Officer: Edward R. Bates
Industrial Environmental Research Laboratory - Cincinnati
Cincinnati, Ohio 45268

TECHNICAL REPORT DATA
(Please read Instructions on the reverse before completing)

1. REPORT NO.	2.	3. RECIPIENT'S ACCESSION NO.
4. TITLE AND SUBTITLE POLLUTION CONTROL TECHNICAL MANUAL FOR TOSCO II OIL SHALE RETORTING WITH UNDERGROUND MINING.		5. REPORT DATE 6. PERFORMING ORGANIZATION CODE
7. AUTHOR(S) Denver Research Institute		8. PERFORMING ORGANIZATION REPORT NO.
9. PERFORMING ORGANIZATION NAME AND ADDRESS Denver Research Institute University of Denver Denver, Colorado 80208		10. PROGRAM ELEMENT NO. N104 CZN1A 11. CONTRACT/GRANT NO. CR-807294
12. SPONSORING AGENCY NAME AND ADDRESS Industrial Environmental Research Laboratory Cincinnati, Ohio 45268		13. TYPE OF REPORT AND PERIOD COVERED Final 14. SPONSORING AGENCY CODE
15. SUPPLEMENTARY NOTES		

16. ABSTRACT

The TOSCO II oil shale PCTM addresses the TOSCO II retorting technology as developed by The Oil Shale Corporation (a subsidiary of the TOSCO Corporation). The TOSCO II oil shale facility described in this document is the plant proposed by Colony Development Operation for commercial development of its oil shale resources in western Colorado.

This manual proceeds through a description of the TOSCO II oil shale plant proposed by Colony Development Operation, characterizes the waste streams produced in each medium, and discusses the array of commercially available controls which can be applied to the TOSCO II plant waste streams. From these generally characterized controls, several are examined in more detail for each medium in order to illustrate typical control technology operation. Control technology cost and performance estimates are presented, together with descriptions of the discharge streams, secondary waste streams and energy requirements. A summary of data limitations and needs for environmental and control technology considerations is presented.

17. KEY WORDS AND DOCUMENT ANALYSIS

a. DESCRIPTORS	b. IDENTIFIERS/OPEN ENDED TERMS	c. COSATI Field/Group

18. DISTRIBUTION STATEMENT Release to Public	19. SECURITY CLASS *(This Report)* Unclassified 20. SECURITY CLASS *(This page)* Unclassified	21. NO. OF PAGES 22. PRICE

EPA Form 2220-1 (Rev. 4-77) PREVIOUS EDITION IS OBSOLETE

DISCLAIMER

The information in this document has been funded wholly or in part by the United States Environmental Protection Agency under Cooperative Agreement CR-807294 to the Denver Research Institute, University of Denver. It has been subject to the Agency's peer and administrative review, and it has been approved for publication as an EPA document. Mention of trade names or commercial products does not constitute endorsement or recommendation for use.

FOREWORD

The purpose of the Pollution Control Technical Manuals (PCTMs) is to provide process, discharge, and pollution control data in summarized form for the use of permit writers, developers, and other interested parties. The PCTM series covers a range of alternate fuel sources, including coal gasification, coal liquefaction by direct and indirect processing, and the retorting of oil shale.

The series consists of a set of technical volumes directed at production facilities based upon specific conversion processes. The entire series is supplemented by an appendix volume which describes the operation and application of approximately 50 control processes.

All PCTMs are prepared on a base plant concept (coal gasification and liquefaction) or developers' proposed designs (oil shale) which may not fully reflect plants to be built in the future. The PCTMs present examples of control applications, both as individual process units and as integrated control trains. These examples are taken in part from applicable permit applications and, therefore, are reflective of specific plants. None of the examples are intended to convey an Agency endorsement or recommendation, but rather are presented for illustrative purposes. The selection of control technologies for application to specific plants is the exclusive function of the designers and permitters who have the flexibility to utilize the lowest cost and/or most effective approaches. It is hoped that readers will be able to relate their waste streams and controls to those presented in these manuals to enable them to better understand the extent to which various technologies may control specific waste streams and utilize the information in making control technology selections for their specific needs.

The reader should be aware that the PCTMs contain no legally binding requirements or guidance, and that nothing contained in the PCTMs relieves a facility from compliance with existing or future environmental regulations or permit requirements.

Herbert L. Wiser
Acting Deputy Assistant Administrator
Office of Research and Development
U.S. Environmental Protection Agency

ABSTRACT

The Environmental Protection Agency (EPA), Office of Research and Development, has undertaken an extensive study to determine synthetic fuel plant waste stream characteristics and pollution control systems. The purpose of this and all other PCTMs is to convey this information in a manner that is readily useful to designers, permit writers and the public.

The TOSCO II oil shale PCTM addresses the TOSCO II retorting technology as developed by The Oil Shale Corporation (a subsidiary of the Tosco Corporation). The TOSCO II oil shale facility described in this document is the plant proposed by Colony Development Operation for commercial development of its oil shale resources in western Colorado. TOSCO II plants proposed or built by other developers in the future can be expected to be similar in most aspects to the plant described in this document, but each can be expected to vary in some respects, such as mining methods, selection of particular control technologies, or methods for upgrading the raw shale oil.

This manual proceeds through a description of the TOSCO II oil shale plant proposed by Colony Development Operation, characterizes the waste streams produced in each medium, and discusses the array of commercially available controls which can be applied to the TOSCO II plant waste streams. From these generally characterized controls, several are examined in more detail for each medium in order to illustrate typical control technology operation. Control technology cost and performance estimates are presented, together with descriptions of the discharge streams, secondary waste streams and energy requirements. A summary of data limitations and needs for environmental and control technology considerations is presented.

CONTENTS

Foreword iii
Abstract iv
Figures. viii
Tables xi
Abbreviations. xvii
Conversion Factors xx
Acknowledgments. xxii

1. INTRODUCTION. 1
   1.1 PURPOSE. 1
   1.2 APPROACH 2
   1.3 DATA SOURCES 3
   1.4 STATE OF TECHNOLOGY DEVELOPMENT. 3
      1.4.1 TOSCO II Retorting Process 4
   1.5 ASSUMPTIONS. 4
      1.5.1 Pollution Control and Performance Estimates. 5
      1.5.2 Components of Pollution Control Cost Estimates . . . 5
   1.6 UNIQUE FEATURES. 9
   1.7 ORGANIZATION AND USE OF THE MANUAL 14

2. SUMMARY OF STUDY FEATURES 27
   2.1 PROCESS OVERVIEW 28
      2.1.1 Site Description 30
      2.1.2 Description of the Plant Complex 33
      2.1.3 Description of the Retorting Process 33
   2.2 POLLUTION CONTROL CASE STUDIES 38
      2.2.1 Key Features of Pollution Control. 39
      2.2.2 Pollution Control Case Studies 40
   2.3 SUMMARY OF POLLUTION CONTROL TECHNOLOGIES AND COST 45

3. PROCESS FLOW DIAGRAMS AND FLOW RATES. 53
   3.1 STRUCTURE OF THE DIAGRAMS. 53
   3.2 OVERALL PLANT COMPLEX. 53

CONTENTS (cont.)

3.3 UNIT PROCESS FLOW DIAGRAMS 56

3.3.1 Mining, Crushing and Transport of Raw Shale. 56
3.3.2 TOSCO II Aboveground Retorting Process 58
3.3.3 Oil and Gas Recovery Unit. 61
3.3.4 Amine Absorption/Claus Sulfur Recovery Units (Case Studies A and B) 63
3.3.5 Stretford Sulfur Process (Case Study C). 65
3.3.6 Wellman-Lord Tail Gas Process (Case Studies A and B) 67
3.3.7 Hydrogen Unit. 67
3.3.8 Delayed Coker. 70
3.3.9 Gas Oil Hydrotreater 70
3.3.10 Naphtha Oil Hydrotreater 73
3.3.11 Ammonia Recovery Process 75
3.3.12 Biological Oxidation (Case Study B). 75
3.3.13 Solid Waste Management 77
3.3.14 Water Management 80

4. INVENTORY AND COMPOSITION OF PLANT PROCESS AND WASTE STREAMS. . . 87

4.1 INVENTORY OF STREAMS 87

4.2 MAJOR STREAM COMPOSITIONS. 125

4.2.1 Material Balance 125
4.2.2 Raw Oil Shale. 125
4.2.3 Processed Shale. 130
4.2.4 Crude Shale Oil and Upgraded Oil Products. 132
4.2.5 Retort Gas 132
4.2.6 Flue Gas 140
4.2.7 Process Wastewaters. 146
4.2.8 Stripped Foul Water Treatment. 152

4.3 POLLUTANT CROSS-REFERENCE TABLES 157

5. POLLUTION CONTROL TECHNOLOGY. 167

5.1 AIR POLLUTION CONTROL. 168

5.1.1 Particulate Control. 168
5.1.2 Sulfur Control 174
5.1.3 Nitrogen Oxides Control. 215
5.1.4 Hydrocarbon Control. 221
5.1.5 Carbon Monoxide Control. 229
5.1.6 Control of Other Criteria Pollutants 230
5.1.7 Control of Noncriteria Air Pollutants. 230

5.2 WATER MANAGEMENT AND POLLUTION CONTROL 233

5.2.1 Suspended Matter, Oil and Grease 234
5.2.2 Dissolved Gases and Volatiles. 243
5.2.3 Dissolved Inorganics 249

CONTENTS (cont.)

5.2.4 Dissolved Organics 265
5.2.5 Water Requirements 290

5.3 SOLID WASTE MANAGEMENT 300

5.3.1 Disposal Approaches. 300
5.3.2 Surface Hydrology Control Technologies 304
5.3.3 Subsurface Hydrology Control Technologies. 311
5.3.4 Surface Stabilization Technologies 321
5.3.5 Hazardous Waste Control Technologies 328

6. POLLUTION CONTROL COSTS 331

6.1 ENGINEERING COST DATA. 331

6.1.1 Bases of Engineering Cost Data 331
6.1.2 Details of Engineering Costs 336

6.2 COST ANALYSIS METHODOLOGY. 336
6.2.1 Overview of Cost Analysis Methodology. 336
6.2.2 Economic Assumptions Used in Total Cost Calculations. 343
6.2.3 Solid Waste Management Costs 350
6.2.4 Control Cost Example 351

6.3 COST ANALYSIS RESULTS. 354

6.3.1 Results for Standard Economic Assumptions. 354
6.3.2 Sensitivity Analyses 359

6.4 DETAILS OF COST ANALYSIS METHODOLOGY 377

6.4.1 Cost Algorithms. 377
6.4.2 Example Calculation of a Fixed Charge Factor 379
6.4.3 Cost Levelizing Calculations 381

7. DATA LIMITATIONS AND RESEARCH NEEDS 385

7.1 DATA LIMITATIONS 385

7.2 RESEARCH NEEDS 386

8. REFERENCES. 405

FIGURES

Number		Page
2.1-1	Colony Development Operation, site location	31
2.1-2	Geologic cross section of Piceance Creek Basin	32
2.1-3	Location of overall process activities	34
2.1-4	Plot plan for overall processing facility	35
2.1-5	TOSCO II oil shale retorting process	37
2.2-1	Process flow diagram, case studies A and B	41
2.2-2	Process flow diagram, case study C	42
3.2-1	Process operations and waste streams	54
3.3-1	Overall plant complex	57
3.3-2	Mining and crushing	59
3.3-3	TOSCO II retorting	60
3.3-4	Oil and gas recovery and foul water stripping	62
3.3-5	Amine absorber and Claus sulfur recovery, case studies A and B	64
3.3-6	Stretford sulfur recovery, case study C	66
3.3-7	Wellman-Lord process, case studies A and B	68
3.3-8	Hydrogen unit	69
3.3-9	Delayed coking	71
3.3-10	Gas oil hydrogenation	72
3.3-11	Naphtha hydrogenation	74
3.3-12	Ammonia recovery	76
3.3-13	Biological oxidation, case study B	78
3.3-14	Solid waste disposal	79
3.3-15	Water management	81
3.3-16	Overall water management scheme, case study A	83
3.3-17	Overall water management scheme, case study B	84
3.3-18	Overall water management scheme, case study C	85

FIGURES (cont.)

Number		Page
5.1-1	Particulate control technologies	169
5.1-2	Cost of particulate control with baghouses	177
5.1-3	Cost of particulate control with venturi wet scrubbers	178
5.1-4	Sulfur dioxide control technologies	180
5.1-5	Hydrogen sulfide control technologies	186
5.1-6	Cost of acid gas removal with DEA process	201
5.1-7	Cost of sulfur recovery with Claus process	202
5.1-8	Cost of Claus tail gas treatment with Wellman-Lord process	203
5.1-9	Cost of sulfur recovery with Stretford process	204
5.1-10	Scot process flow scheme	206
5.1-11	Cost of Claus tail gas treatment with Scot process	210
5.1-12	MDEA process flow scheme	211
5.1-13	Cost of acid gas removal and tail gas treatment with MDEA Process	214
5.1-14	Nitrogen oxides control technologies	218
5.1-15	Hydrocarbon control technologies	223
5.1-16	Cost of hydrocarbon control with thermal oxidizer	228
5.1-17	Carbon monoxide control technologies	231
5.2-1	Suspended matter, oil and grease control technologies	235
5.2-2	Cost of river water clarification	240
5.2-3	Cost of oil/water separation	242
5.2-4	Cost of equalization pond	245
5.2-5	Dissolved gases and volatiles control technologies	246
5.2-6	Cost of foul water steam stripping	251
5.2-7	Cost of ammonia recovery with Phosam-W process	255
5.2-8	Dissolved inorganics control technologies	256
5.2-9	Cost of boiler feedwater treatment with zeolite resin	262
5.2-10	Cost of cooling water treatment	264
5.2-11	Flow scheme for solar evaporation treatment	266
5.2-12	Cost of solar pond	267
5.2-13	Dissolved organics control technologies	268

FIGURES (cont.)

Number		Page
5.2-14	Cost of organics control with biological oxidation	277
5.2-15	Reverse osmosis process flow scheme	278
5.2-16	Cost of organics removal with reverse osmosis	281
5.2-17	Vapor compression evaporation process flow scheme	282
5.2-18	Cost of organics control with vapor compression evaporation	285
5.2-19	Carbon adsorption process flow scheme	286
5.2-20	Cost of organics control with carbon adsorption	289
5.2-21	Wet air oxidation process flow scheme	291
5.2-22	Cost of organics control with wet air oxidation	294
5.3-1	Surface hydrology control technologies	305
5.3-2	Runon diversion costs	308
5.3-3	Typical runoff collection systems	309
5.3-4	Runoff collection and channeling	310
5.3-5	Runoff collection costs	312
5.3-6	Runoff/leachate pond costs	313
5.3-7	Runoff/leachate pond liner costs	314
5.3-8	Subsurface hydrology control technologies	316
5.3-9	Liner costs	319
5.3-10	Leachate collection costs	320
5.3-11	Groundwater collection costs	322
5.3-12	Surface stabilization technologies	323
5.3-13	Dust control costs	325
5.3-14	Reclamation and revegetation costs	327
5.3-15	Hazardous waste control technologies	329
6.0-1	Interrelationships among various cost and economic terms	332
6.3-1	Sensitivity analyses for case study A: total air pollution control costs	369
6.3-2	Sensitivity analyses for case study A: total water pollution control and solid waste management costs	370

TABLES

Number		Page
1.5-1	Performance Levels Estimated for Major Pollution Controls	6
1.5-2	Components of Fixed Capital Cost Estimates	7
1.5-3	Components of Direct Annual Operating Cost Estimates	8
1.5-4	Summary of Major Standard Economic Assumptions Used in Control Cost Evaluations	9
1.6-1	Major Features of the Oil Shale PCTMs	10
1.6-2	Pollution Control Technologies Examined in the Oil Shale PCTMs	12
1.7-1	Composite List of Streams	16
2.1-1	Major Parameters Defining the Size of the Commercial Plant Complex	29
2.3-1	Summary of Pollution Control Technologies	46
2.3-2	Inventory of Major Pollution Control Technologies	47
2.3-3	Pollution Control Cost Summary	50
4.1-1	Inventory of Gaseous Streams	88
4.1-2	Compositions of Gaseous Streams	96
4.1-3	Inventory of Liquid Streams	108
4.1-4	Compositions of Liquid Streams	115
4.1-5	Inventory of Solid Streams	121
4.1-6	Compositions of Solid Streams	123
4.2-1	Gross Material Balance for TOSCO II Retort	126
4.2-2	Organic Composition of Raw Shale	127
4.2-3	Approximate Mineral Analysis of Raw Oil Shale	127
4.2-4	Trace Elemental Analysis of Raw Shale	128
4.2-5	Laboratory Column Leachates from Some Colorado Raw Oil Shales	129
4.2-6	Reported Analysis of TOSCO II Processed Shale	130
4.2-7	Composition of Processed Shale	131

TABLES (cont.)

Number		Page
4.2-8	Physical Properties of TOSCO II Processed Shale	131
4.2-9	Levels of Trace Elements Measured in Runoff and Leachates from Field Test Plots of TOSCO II Retorted Shale	133
4.2-10	Leachable Organics in the TOSCO II Processed Shale	134
4.2-11	Soluble Salts in TOSCO II Processed Shale	135
4.2-12	Properties of TOSCO II Crude Shale Oil	136
4.2-13	Properties of Upgraded Fuel Oil from TOSCO II Crude Shale Oil	137
4.2-14	Properties of Other Products from Upgrading of TOSCO II Crude Shale Oil	138
4.2-15	Composition of Retort Gas Before Treatment	139
4.2-16	Sulfur Content of the Amine Treated Fuel Gas	140
4.2-17	Estimated Compositions of C_1/C_2 and C_3/C_4 Fractions	141
4.2-18	C_1/C_2 Fraction Retort Gas After Amine Process	142
4.2-19	C_1/C_2 Fraction Retort Gas After Stretford Process	143
4.2-20	C_3/C_4 Fraction Retort Gas After Amine Process	144
4.2-21	C_3/C_4 Fraction Retort Gas After Stretford Process	145
4.2-22	Calculated Flue Gas Compositions for Fuels Burned in the Colony Plant, Case Studies A and B	147
4.2-23	Calculated Flue Gas Compositions for Fuels Burned in the Colony Plant, Case Study C	148
4.2-24	Materials Balance for the Claus Unit	149
4.2-25	Materials Balance for the Wellman-Lord Unit	150
4.2-26	Inorganic Species in TOSCO II Foul Water	151
4.2-27	Organic Content of Gas Condensate (Foul Water)	152
4.2-28	Composition of Foul Water	153
4.2-29	Material Balance Around Foul Water Steam Stripper	154
4.2-30	Material Balance Around Ammonia Recovery Unit, Case Studies A and B	155
4.2-31	Material Balance Around Ammonia Recovery Unit, Case Study C	156
4.2-32	Composition of Foul Water After Biological Oxidation	158
4.3-1	Pollutant Cross-Reference for Gaseous Streams	159
4.3-2	Pollutant Cross-Reference for Liquid Streams	162

TABLES (cont.)

Number		Page
4.3-3	Pollutant Cross-Reference for Solid Streams	165
5.1-1	Key Features of Particulate Control Technologies	170
5.1-2	Particulate Control Equipment and Design Parameters	175
5.1-3	Cost of Particulate Pollution Control	176
5.1-4	Total Particulate Emissions from the Plant	179
5.1-5	Key Features of Sulfur Dioxide Control Technologies	181
5.1-6	Key Features of Hydrogen Sulfide Control Technologies	187
5.1-7	Major Items in the DEA Gas Treating Process	195
5.1-8	Major Items in the Claus Process	196
5.1-9	Major Items in the Wellman-Lord Process	197
5.1-10	Major Items in the Holmes-Stretford Process	199
5.1-11	Cost of Sulfur Pollution Control	200
5.1-12	Materials Balance for the Claus Process	207
5.1-13	Materials Balance for the Scot Process	208
5.1-14	Major Items in the Scot Process	209
5.1-15	Retort Gas Composition Before and After MDEA Treatment	212
5.1-16	Major Items in the MDEA Process	213
5.1-17	Total SO_2 Emissions from the Plant	216
5.1-18	Key Features of Nitrogen Oxides Control Technologies	219
5.1-19	Total NOx Emissions from the Plant	222
5.1-20	Key Features of Hydrocarbon Control Technologies	224
5.1-21	Major Items in the Thermal Oxidizer	226
5.1-22	Hydrocarbon Control Practices and Equipment	226
5.1-23	Cost of Hydrocarbon Pollution Control	227
5.1-24	Total Hydrocarbon Emissions from the Plant	229
5.1-25	Key Features of Carbon Monoxide Control Technologies	232
5.1-26	Total CO Emissions from the Plant	233
5.2-1	Key Features of Control Technologies for Suspended Matter, Oils and Greases	236
5.2-2	Design and Cost of River Water Clarification	239
5.2-3	Design and Cost of API Oil/Water Separator for Foul Water	241

TABLES (cont.)

Number		Page
5.2-4	Design and Cost of API Oil/Water Separator for Runoffs and Leachate	243
5.2-5	Design and Cost of Equalization Pond	244
5.2-6	Key Features of Control Technologies for Dissolved Gases and Volatiles	247
5.2-7	Design and Cost of Foul Water Stripper	250
5.2-8	Design of Ammonia Recovery System	252
5.2-9	Cost of Ammonia Recovery	254
5.2-10	Key Features of Control Technologies for Dissolved Inorganics	257
5.2-11	Design and Cost of Boiler Feedwater Treatment	261
5.2-12	Design and Cost of Cooling Water Treatment	263
5.2-13	Design and Cost of Solar Evaporation Pond	265
5.2-14	Key Features of Control Technologies for Dissolved Organics	269
5.2-15	Design and Cost of Biological Oxidation of Stripped Foul Water	276
5.2-16	Composition of Stripped Foul Water Before and After Reverse Osmosis Treatment	279
5.2-17	Design and Cost of Reverse Osmosis Treatment of Stripped Foul Water	280
5.2-18	Composition of Foul Water After Vapor Compression Evaporation Treatment	283
5.2-19	Design and Cost of Vapor Compression Evaporation of Stripped Foul Water	284
5.2-20	Material Balance for the Carbon Adsorption Process	287
5.2-21	Design and Cost of Activated Carbon Adsorption for RO or VCE Treated Water	288
5.2-22	Material Balance for the Wet Air Oxidation Process	292
5.2-23	Design and Cost of Wet Air Oxidation of RO and VCE Concentrate Streams	293
5.2-24	Steam Production, Uses and Boiler Feedwater Needs	295
5.2-25	Water Quality Parameters for Boiler Feedwater	296
5.2-26	Plant Cooling Water Requirements	296
5.2-27	Water Quality Parameters for Cooling Tower Recirculation	297

TABLES (cont.)

Number		Page
5.2-28	Water Requirements for Processed Shale Disposal and Dust Control	298
5.2-29	Potable and Service Water Requirements	299
5.3-1	Major Wastes Produced Over a Period of 20 Years	301
5.3-2	Key Features of Solid Waste Disposal Approaches	302
5.3-3	Key Features of Surface Hydrology Control Technologies	306
5.3-4	Key Features of Subsurface Hydrology Control Technologies	317
5.3-5	Key Features of Surface Stabilization Technologies	324
5.3-6	Key Features of Hazardous Waste Control Technologies	330
6.1-1	Detailed Engineering Costs for Air Pollution Controls	337
6.1-2	Detailed Engineering Costs for Water Pollution Controls, Case Study A	338
6.1-3	Detailed Engineering Costs for Water Pollution Controls, Case Study B	339
6.1-4	Detailed Engineering Costs for Water Pollution Controls, Case Study C	340
6.1-5	Engineering Costs and Timing of Solid Waste Management Activities	341
6.2-1	Summary of Standard Cost and Economic Assumptions	344
6.2-2	Economic Assumptions that Vary from Control to Control	345
6.2-3	Fixed Capital and Direct Annual Operating Costs for Solid Waste Management	352
6.2-4	Per-Barrel Cost Breakdown for DEA Unit	353
6.3-1	Summary of Pollution Control Costs for Standard Economic Assumptions	356
6.3-2	Pollution Control Costs, by Control Group, for the Standard Economic Assumptions	357
6.3-3	Control Groupings	358
6.3-4	Details of Air Pollution Control Costs, Standard Economic Assumptions	360
6.3-5	Details of Water Pollution Control Costs, Standard Economic Assumptions	361
6.3-6	Details of Solid Waste Management Costs, Standard Economic Assumptions	363

TABLES (cont.)

Number		Page
6.3-7	Assumptions for Sensitivity Analyses	364
6.3-8	Charge Rates for Sensitivity Analyses	365
6.3-9	Sensitivity Analyses Expressed as a Percentage of Shale Oil Value	366
6.3-10	Sensitivity Analyses by Control Group	367
6.4-1	Example of Fixed Charge Factor Calculation	380
7.1-1	Data Limitations and Research Needs	388

ABBREVIATIONS

°API	-- gravity (American Petroleum Institute)
ACF	-- actual cubic feet
ACFM	-- actual cubic feet per minute
ACRS	-- accelerated cost recovery system
ADA	-- anthraquinone disulfonic acid
ADR	-- asset depreciation range
AMB	-- ambient
BOD	-- biochemical oxygen demand
BP	-- annual by-product credit
BPSD	-- barrels per stream day
CA	-- carbon adsorption
CC	-- total annual capital charge
CMLRB	-- Colorado Mined Land Reclamation Board
COD	-- chemical oxygen demand
CPB	-- per-barrel control cost
CS/SS	-- carbon steel/stainless steel
DCF	-- discounted cash flow
DCF ROR	-- discounted cash flow rate of return
DEA	-- diethanolamine
DGA	-- diglycolamine
DIPA	-- diisopropanolamine
DOC	-- direct annual operating cost
DRI	-- Denver Research Institute
ED	-- electrodialysis
EIA	-- Environmental Impact Analysis
EIS	-- Environmental Impact Statement
ESC	-- annual extra start-up costs
ESP	-- electrostatic precipitator

ABBREVIATIONS (cont.)

FCC	-- fixed capital cost
FGD	-- flue gas desulfurization
FGR	-- flue gas recirculation
fpm	-- feet per minute
gpm	-- gallons per minute
gpt	-- gallons per ton
HP	-- horsepower
IBP	-- initial boiling point
IOC	-- indirect annual operating cost
ITC	-- investment tax credit
LHV	-- low heating value
LPG	-- liquefied petroleum gas
LTPSD	-- long tons per stream day
MDEA	-- methyldiethanolamine
MEA	-- monoethanolamine
MEB	-- multiple effect boiling
MMBtu	-- million British thermal units
MSF	-- multistage flash
MTPSD	-- metric tons per stream day
MW	-- megawatts
MWt	-- molecular weight
pcf	-- pounds per cubic foot
pCi/l	-- picocuries per liter
PCTM	-- Pollution Control Technical Manual
POM	-- polynuclear organic matter
ppmv	-- parts per million, by volume
ppmw	-- parts per million, by weight
PSD	-- Prevention of Significant Deterioration
psia	-- pounds per square inch, absolute
psig	-- pounds per square inch, gauge
RF	-- fixed capital charge rate
RHC	-- reactive hydrocarbons
RO	-- reverse osmosis

ABBREVIATIONS (cont.)

RSH	-- alkyl thiols, mercaptans
RW	-- working capital charge rate
SCF	-- standard cubic foot
SCFM	-- standard cubic feet per minute
SCOT	-- Shell Claus Off-gas Treating
SCR	-- selective catalytic reduction
SEA	-- standard economic assumptions
SNPA/DEA	-- Societe Nationale des Petroles d'Aquitaine/ diethanolamine
SS	-- stainless steel
STC	-- annual severance tax credit
SWEC	-- Stone and Webster Engineering Corporation
TC	-- total annual control cost
TDS	-- total dissolved solids
TIA	-- annual property tax and insurance allowance
TOC	-- total annual operating cost
TPM	-- total particulate matter
TPSD	-- tons per stream day
TSS	-- total suspended solids
UF	-- ultrafiltration
USBM	-- U.S. Bureau of Mines
VCE	-- vapor compression evaporation
VOC	-- volatile organic compounds
WAO	-- wet air oxidation
WC	-- working capital
WPA	-- Water Purification Associates

CONVERSION FACTORS

1 pound, lb	=	453.5924 grams, g 0.4536 kilograms, kg
1 ton	=	0.9072 metic tons, tonnes
1 inch, in	=	2.5400 centimeters, cm
1 foot, ft	=	30.4800 centimeters, cm 0.3048 meters, m
1 mile, mi	=	1,609.3440 meters, m 1.6093 kilometers, km
1 square inch, in^2	=	6.4516 square centimeters, cm^2
1 square foot, ft^2	=	0.0929 square meters, m^2
1 square mile, mi^2	=	2.5900 square kilometers, km^2 258.9988 hectares, ha
1 acre	=	4,046.8564 square meters, m^2 0.4047 hectares, ha
1 cubic inch, in^3	=	16.3871 cubic centimeters, cm^3
1 cubic foot, ft^3	=	28.3161 liters, l
1 gallon, gal	=	3.7853 liters, l 0.0038 cubic meters, m^3
1 barrel, bbl	=	158.9828 liters, l 0.1590 cubic meters, m^3
1 acre-foot	=	1,233.4818 cubic meters, m^3
1 pound/square inch, psi	=	70.3070 grams/square centimeter, g/cm^2 0.0680 atmospheres, atm 0.3591 millimeters of mercury, mm of Hg
1 pound/cubic inch, lb/in^3	=	27.6799 grams/cubic centimeter, g/cm^3 27.6807 grams/milliliter, g/ml

CONVERSION FACTORS (cont.)

1 pound/cubic foot, pcf, lb/ft^3	=	0.0160 grams/cubic centimeter, g/cm^3 16.0185 kilograms/cubic meter, kg/m^3
1 gallon per ton, gpt	=	4.1726 liter/tonne, l/tonne
1 barrel per day, BPD	=	0.1590 cubic meters/day, m^3/d
1 gallon per minute, gpm	=	0.0631 liters/second, l/s
1 British thermal unit, Btu	=	251.9958 gram-calories, g-cal 1,054.1800 joules, J
1 million British thermal units, MMBtu	=	292.8750 kilowatt-hours, kW-hr
1 British thermal unit/pound, Btu/lb	=	0.5556 gram-calories/gram, g-cal/g
1 British thermal unit/cubic foot, Btu/ft^3	=	8.8994 gram-calories/liter, g-cal/l

ACKNOWLEDGMENTS

This Pollution Control Technical Manual was prepared for the EPA by the Denver Research Institute (DRI), University of Denver, Denver, Colorado, under EPA Cooperative Agreement CR-807294. Subcontractor support was provided to DRI by Stone and Webster Engineering Corporation (SWEC) of Denver, Colorado, and Water Purification Associates (WPA) of Cambridge, Massachusetts. The project manager for DRI was Mr. Kishor Gala, Chemical and Materials Sciences Division.

SECTION 1

INTRODUCTION

1.1 PURPOSE

Future U.S. energy production envisions the development of an environmentally acceptable, commercial synthetic fuels industry. As part of this overall effort, the Environmental Protection Agency (EPA), Office of Research and Development, has for the past several years undertaken extensive studies to determine synthetic fuel plant waste stream characteristics and potentially applicable pollution control systems.

The purpose of the Pollution Control Technical Manuals (PCTMs) is to convey, in a summarized and readily useful manner, information on synfuel waste stream characteristics and pollution control technology as obtained from studies by the EPA and others. The documents provide waste stream characterization data and describe a wide variety of pollution controls in terms of estimated performance, cost and reliability. The PCTMs contain no legally binding requirements, no regulatory guidance, and include no preference for process technologies or controls. Nothing within these documents relieves a facility from compliance with existing or future environmental regulations or permits.

The Pollution Control Technical Manuals consist of a set of seven discrete documents. There are six process specific PCTMs and a more general appendix volume which describes over fifty pollution control technologies. Application of pollution controls to a particular synfuel process is described in each process specific manual. The seven manuals are:

- *Pollution Control Technical Manual for Lurgi Based Indirect Coal Liquefaction and SNG*
- *Pollution Control Technical Manual for Koppers-Totzek Based Indirect Coal Liquefaction*
- *Pollution Control Technical Manual for Exxon Donor-Solvent Direct Coal Liquefaction*
- *Pollution Control Technical Manual for Lurgi Oil Shale Retorting with Open Pit Mining*
- *Pollution Control Technical Manual for Modified In Situ Oil Shale Retorting Combined with Lurgi Surface Retorting*

- *Pollution Control Technical Manual for TOSCO II Oil Shale Retorting with Underground Mining*

- *Control Technology Appendices for Pollution Control Technical Manuals*

By focusing on specific process technologies, the PCTMs attempt to be as definitive as possible on waste stream characteristics and control technology applications. This focus does not imply any EPA recommendations for particular process or control designs. Those described in the manuals are intended as representative examples of processes and control technologies that might be used. The design of the PCTMs, from process description through waste stream characterization and control technology evaluation, is intended to provide the user with a comprehensive understanding of the environmental factors inherent in operating synthetic fuel plants.

Control technology discussions presented in the PCTMs reflect pollutant removal levels which are believed to be achievable with currently available control technologies based upon existing data. Since there are no domestic commercial-scale synfuels facilities, the data base supporting this document was derived from bench- and pilot-scale synfuel facilities, developer's estimates, engineering analyses and analogue industries. As commercial synthetic fuel plants are built, the EPA will continue conducting research in order to develop a more comprehensive data base. Based on findings from these future studies, the Agency may update these documents or promulgate industry specific standards. In the interim, the Agency encourages facility planners, permit officials, and other interested parties to take advantage of the information contained in these documents.

1.2 APPROACH

The approach taken in developing this manual is to describe, in detail, an oil shale facility which has been proposed for development and to emphasize its pollution control aspects. This facility is the basis for the case studies described in Section 2 "Summary of Study Features," Section 3 "Process Flow Diagrams and Flow Rates," and Section 4 "Inventory and Composition of Plant Process and Waste Streams." The process descriptions and control technologies presented in these case studies are based on documents (identified in Section 1.3) published by the proposed facility developers and parallel, as closely as possible, the current thinking of the developers.

This manual examines TOSCO II aboveground retorting with underground mining as proposed by Colony Development Operation for commercial development of its resources in the Piceance Basin of Colorado. It should be noted, however, that in May 1982 Exxon Company, U.S.A. (a subsidiary of Exxon Corporation and the operator for the Colony project) announced that it was halting the development of the property. Consequently, The Oil Shale Corporation (a subsidiary of Tosco Corporation and the remaining partner in the Colony project) decided to sell its interest in the development to Exxon. Future plans for development of the property are unknown at present.

In order to enhance the flexibility of this manual, and since oil shale development plans are continually changing, Section 5 "Pollution Control Technology" expands beyond the description of the case studies to examine other pollution control technologies and approaches that may be applicable to the waste sources identified in the case studies. While controls applied to major gaseous, liquid, and solid streams described in the case studies are those which have been proposed by the developer, Section 5 also examines alternative pollution control technologies on a stream-by-stream basis. For each stream receiving control, all major control technologies are discussed, while some example technologies are analyzed in considerable depth. Stream flow rates and pollutant characteristics are used in estimating the size, performance, and cost of the controls, and secondary streams resulting from the pollution control activities are identified.

1.3 DATA SOURCES

The plans for a commercial oil shale development using TOSCO II technology were first described in Colony's Environmental Impact Analysis (Colony Development Operation, 1974). Based on the Colony information, the Bureau of Land Management subsequently prepared an Environmental Impact Statement so that Federal action could be taken on the proposed development (U.S. DOI, 1977). In 1977, Colony applied to the EPA for a Prevention of Significant Deterioration (PSD) permit and then, in 1980, applied to the Colorado Mined Land Reclamation Board for a mining and solid waste disposal permit (Colony Development Operation, 1977 and March 1980, respectively). These are the principal data sources used for the case studies examined in this manual.

Other frequently used sources for deriving information include: "The TOSCO-II Oil Shale Process" (Whitcombe and Vawter, March 1975), *Water Pollution Potential from Surface Disposal of Processed Oil Shale from the TOSCO II Process* (Metcalf & Eddy Engineers, October 1975), "Analysis of TOSCO II Oil Shale Retort Water" (Haas, June 1979), and *An Engineering Analysis Report on the TOSCO II Oil Shale Process* (Prien and Nevens, March 1977). Other published as well as unpublished sources were used and they are cited throughout the manual.

Where available, actual data from the various scale operations in oil shale processing were used. It is believed that these data accurately reflect the major technical features which will be encountered in a commercial oil shale industry. In addition, technologies from analogue industries are transferred, when appropriate. When necessary, engineering analysis and judgment provided by the authors of this manual (Denver Research Institute, Stone and Webster Engineering Corporation and Water Purification Associates) and vendor information were used. In each case, all assumptions required to carry out the analyses are listed, and areas lacking hard data are identified (see Sections 1.5 and 7 for more detailed discussions).

1.4 STATE OF TECHNOLOGY DEVELOPMENT

As stated above, the processing plant considered in this manual is based on the TOSCO II retorting process as proposed by Colony Development

Operation. Approximately 66,000 tons per stream day (TPSD) of raw shale will be mined using underground room-and-pillar mining. The shale on the Colony property has an average oil yield of 35 gallons per ton (gpt) based on the modified Fischer assay. The mined shale will be processed in six TOSCO II aboveground retorts, at an efficiency equal to 100% of Fischer assay, to produce 55,000 barrels per stream day (BPSD) of crude shale oil which eventually will be converted to 47,000 BPSD of an upgraded syncrude. (The stream-day rates are the maximum, 24-hr/day rates that can be achieved; however, occasional equipment failure and required maintenance result in a reduced production efficiency. Normally, the plant can be expected to operate at 90% of its capacity on a long-term basis, or for 328.5 calendar days per year. Thus, the calendar-day production rates would be 90% of the stream-day rates.) The current status of the retorting technology is reviewed below.

1.4.1 TOSCO II Retorting Process

TOSCO II is a proprietary process developed by The Oil Shale Corporation. It is an indirectly heated retorting process involving solid-to-solid heat transfer between externally heated ceramic balls and raw oil shale.

Initial development work for the process was performed in 1955, and a 24 tons/day pilot plant was subsequently built in 1957. In 1964, a 1,000 tons/day semi-works plant was constructed near Parachute, Colorado, and a pilot-scale room-and-pillar mine was also started. The semi-works plant was operated for two years, from 1965 to 1967, to demonstrate the feasibility of the process. Based on information gained during that period, a design study for a 66,000 TPSD commercial plant was undertaken and completed in 1968. Operation of the semi-works plant was resumed in 1969 and continued through 1972 to provide additional data for the commercial design. That design still stands as the current plan for the retorting process and forms the basis for the environmental analyses, permits, etc.

During the entire operating period for the semi-works plant, approximately 290,000 tons of oil shale were processed to yield over 200,000 barrels of crude shale oil. Material balances for the process indicate a possibility of obtaining 100% of Fischer assay oil yield for the commercial plant. Substantial operating data were collected during the operation of the pilot and semi-works plants.

1.5 ASSUMPTIONS

In performing a detailed analysis of the TOSCO II process and associated operations, a number of specific assumptions which influence the results of the analysis and their interpretation were made. The underlying, major assumptions relating to pollution control performance and cost, as well as the bases behind the assumptions, are summarized in this section.

1.5.1 Pollution Control and Performance Estimates

In the process of preparing this manual, applicable pollution control technologies for different waste streams were reviewed, and controls proposed by industry were evaluated to the point that performance and cost could be estimated. Equipment vendors' estimates and guarantees were used whenever available. Other performance levels were estimated using laboratory testing data. These performance estimates should be viewed tentatively because very little data based on actual source testing exist. The major pollution controls evaluated in this manual are presented in Table 1.5-1, along with the performance levels estimated as a result of the analysis.

The major air pollution control technologies (diethanolamine, or DEA, Claus, Wellman-Lord, Stretford) are commercially available and are used in other industries at a scale similar to that involved in this manual; therefore, operational difficulties in adapting these technologies to oil shale processing are not expected to be great and may primarily involve adapting these technologies to oil shale off-gas characteristics.

In the area of water pollution control, it has been proposed by the developer that the plant will achieve zero-discharge of the process generated waters. The processing plant will be water consumptive, and the required amount of water will be obtained from outside sources, such as the Colorado River. The process waters are treated to the degree necessary for reuse. The technologies considered (steam stripping, ammonia recovery) have been used in analogue industries and can be expected to be employed successfully in the oil shale industry. Waters used in auxiliary plant operations are also treated since the wastes produced from these operations may be used in processed shale moistening and thus may become a source of pollution. Reuse of some waters may negate a need for pollution control; in such cases, no pollution controls in a conventional sense are applied.

Solid wastes are managed using a controlled surface landfill, as proposed in Colony's permit application to the Colorado Mined Land Reclamation Board. The control technologies considered in the areas of surface hydrology (e.g., runon diversion system, runoff collection system, runoff catchment embankment), subsurface hydrology (e.g., bottom liner, groundwater collection system), and surface stabilization (e.g., dust suppression, reclamation and revegetation) are traditional practices associated with solid waste management.

1.5.2 Components of Pollution Control Cost Estimates

Fixed capital and direct annual operating costs were estimated for each piece of pollution control equipment and each control activity. These figures were then used, along with economic assumptions, to calculate total annual control costs which include an annual charge for capital. The total annual capital charge provides for a required after-tax return on investment of 12 percent. The approach used to estimate the capital and operating costs and the economic analysis techniques applied to these data are summarized in Tables 1.5-2 through 1.5-4.

TABLE 1.5-1. PERFORMANCE LEVELS ESTIMATED FOR MAJOR POLLUTION CONTROLS

Control Description	Pollutant Controlled	Control Level Estimated
AIR POLLUTION CONTROL		
Baghouses	Raw and Processed Shale Dust	99.7%
Water Sprays	Raw and Processed Shale Dust	50%
Foam Sprays	Raw and Processed Shale Dust	85%
Thermal Oxidizer	Hydrocarbons	85%
High Energy Venturi Wet Scrubber	Raw Shale Dust	99.8% @ ΔP = 30" of water
Venturi Wet Scrubber		
Ball Elutriator	Processed Shale Dust	99.8% @ ΔP = 40" of water
Processed Shale Moisturizer	Processed Shale Dust	98.4% ΔP = 20" of water
Diethanolamine (DEA) Gas Treating Process	H_2S	135 ppmv
Claus Sulfur Plant	H_2S	95%
Wellman-Lord Tail Gas Unit	H_2S	92%
Holmes-Stretford Gas Treating Process	H_2S	30 ppmv[a]
WATER POLLUTION CONTROL		
Foul Water Stripper	NH_3	94%[b]
	H_2S	99%[b]
	Organic Matter	50%[b]
Ammonia Recovery Unit	NH_3	99.4%[b]
Biological Oxidation	BOD	90%[b]
	TOC	45%[b]
SOLID WASTE MANAGEMENT		
Surface Landfill	Processed Shale, Coke, Sludges, Blowdowns, Concentrates, Spent Catalysts, etc.	N/A

[a] Based on Peabody Process Systems, Inc., February 1981.

[b] Estimates from treatability studies on similar waters conducted by Water Purification Associates, unpublished.

Source: Colony Development Operation, 1977, except as noted.

Fixed capital and direct annual operating cost estimates were developed on a component basis, using current cost data from the actual installation and operation of similar facilities and using vendor quotes for major equipment items. Capital cost estimates are expected to have an average accuracy of ±30 percent. This level of accuracy can only be verified by actual equipment installation. Experience in using the cost estimating procedures for units which actually have been constructed and operated indicate that this level of accuracy should be achievable if the unit installed is exactly as described in determining the cost estimate. Any design changes could cause the actual installed capital cost to fall outside the range.

Table 1.5-2 lists the components estimated in determining the installed fixed capital cost of pollution control equipment. For simple equipment, all components may not be present. For large and complex equipment, estimating the cost of each component may be a major effort. A description of the major equipment included in each capital cost estimate is provided in Section 5 of this document.

TABLE 1.5-2. COMPONENTS OF FIXED CAPITAL COST ESTIMATES

Components
Major Equipment (vendor quotes)
Site Preparation, Excavation and Foundations
Concrete and Rebar
Support Structures
Piping, Ductwork, Joints, Valves, Dampers, etc.
Duct and Pipe Insulation
Pumps and Blowers
Electrical
Instrumentation and Controls
Monitoring Equipment
Erection and Commissioning
Painting
Buildings
Engineering and Other Indirect Costs
Contractor's Fee
Contingency Allowances

Source: DRI.

Table 1.5-3 shows the components comprising direct annual operating costs. Operating supplies include such items as baghouse bags. Maintenance includes the cost of parts used, but the needed inventory of replacement parts is included in fixed capital cost. The cost of water consumed is not included due to uncertainties in estimating the value of water. Direct annual operating costs do not include by-product credits; however, by-product credits are included in total annual operating costs. The operating costs (direct, indirect and total) for each pollution control, along with a detailed discussion of how the costs were determined, are presented on a component basis in Section 6.

TABLE 1.5-3. COMPONENTS OF DIRECT ANNUAL OPERATING COST ESTIMATES

Components
Maintenance and Maintenance Supplies
Operating Supplies
Operating Labor
Cooling Water
Steam
Electricity
Fuel Gas and Oil
Indirect Costs (e.g., supervision, laboratory, etc.)*

* Indirect costs are included in the labor rate.

Source: DRI.

Table 1.5-4 presents the major economic assumptions used in the cost evaluations. Most economic assumptions have been standardized so that the results found in all of the oil shale PCTMs may be compared. A sensitivity analysis was performed (see Section 6 "Pollution Control Costs") to determine the effects of changes in some of the standard economic assumptions. These changes include delayed start-up, changing capital and operating costs, financing considerations and others. All of the oil shale PCTMs use a discounted cash flow approach (DCF) and constant dollars (mid-1980).

TABLE 1.5-4. SUMMARY OF MAJOR STANDARD ECONOMIC ASSUMPTIONS USED IN CONTROL COST EVALUATIONS

Assumptions[a]
• Approach: Discounted Cash Flow Evaluation (DCF)
• Method: Revenue Requirement determined from capital charge plus operating cost[b]
• Required DCF ROR: 12% (100% equity basis)
• Cost Base: Mid-1980 constant dollars
• Income Tax: In accordance with current regulations (48% combined tax rate, 20% investment tax credit); tax credits and allowances can be passed through to a parent company that can benefit from them immediately, without waiting for the project to become profitable
• Project Timing: 4 years construction, 20 years life
• Normal Plant Output: 47,000 barrels per stream day (net, after in-plant use)
• Operating Factors: Year 1 - 50%; Year 2 - 75%; Years 3-20 - 90%

[a] A more detailed list of assumptions is presented in Section 6, Table 6.2-1.

[b] This method permits accurate costs to be determined separately for each control using the DCF approach, without the need for an estimate of total plant cost.

Source: DRI.

1.6 UNIQUE FEATURES

Three oil shale retorting processes were selected for the oil shale PCTMs to allow consideration of different types of retorting processes, mining and disposal techniques, and pollution control technologies. Some features are found in more than one manual, but each process examined has important unique features which are listed in Table 1.6-1.

Table 1.6-2 lists the pollution control technologies examined in the three PCTMs. The table is designed to assist the reader in locating detailed information on any specific control technology.

TABLE 1.6-1. MAJOR FEATURES OF THE OIL SHALE PCTMs

Feature	PCTMs		
	TOSCO II	MIS-Lurgi	Lurgi-Open Pit
MINING			
Underground Room-and-Pillar	X		
Underground MIS		X	
Open Pit			X
RETORTING			
Aboveground	X	X	X
Underground		X	
Direct-heated		X	
Indirect-heated	X	X	X
Solid-to-Solid Heat Transfer	X	X	X
Gas-to-Solid Heat Transfer		X	
Resource Recovery from Processed Shale		X	X
High Carbon Processed Shale	X		
Low Carbon Processed Shale		X	X
Raw Shale Preheating	X		
PROCESSING			
High Btu Off-gas	X	X	X
Low Btu Off-gas		X	
Oil Fractionation	X	X	X

(Continued)

TABLE 1.6-1 (cont.)

Feature	PCTMs		
	TOSCO II	MIS-Lurgi	Lurgi-Open Pit
PROCESSING (cont.)			
Oil Upgrading	X		
Gas Upgrading (for sale)	X		X
In-Plant Fuel Use	X	X	
Excess Electricity		X	
POLLUTION CONTROL			
Retort Gas Cleanup	X	X	X
Process Water Cleanup	X	X	X
Excess Water Discharge			X
By-product Recovery	X	X	X
WASTE DISPOSAL			
Surface Landfill	X	X	
Permitted Design	X		
Open Pit Backfill			X
Groundwater Contamination Potential (subsurface disposal or retort abandonment)		X	X
Surface Water Contamination Potential (valley fill)	X	X	

Source: DRI.

TABLE 1.6-2. POLLUTION CONTROL TECHNOLOGIES EXAMINED IN THE OIL SHALE PCTMs

Control Technology	PCTMs		
	TOSCO II	MIS-Lurgi	Lurgi-Open Pit
AIR POLLUTION			
Diethanolamine (DEA)	X		
Methyldiethanolamine (MDEA)	X		
Claus	X		
Wellman-Lord	X		
Stretford	X	X	X
Shell Claus Off-gas Treating (SCOT)	X		
Limestone Scrubber (FGD)		X	
Absorber/Cooler		X	
Low Flare	X		
High Energy Venturi Wet Scrubber	X		
Venturi Wet Scrubber	X	X	
Electrostatic Precipitator		X	X
Thermal Oxidizer	X		
Fabric Filter (baghouse)	X	X	X
Foam Sprays	X	X	X
Water Sprays	X	X	X
Double Seal Oil Storage	X	X	X
Refrigerated Ammonia Storage	X	X	X
Catalytic Converter	X	X	X
Maintenance	X	X	X

(Continued)

TABLE 1.6-2 (cont.)

Control Technology	PCTMs		
	TOSCO II	MIS-Lurgi	Lurgi-Open Pit
WATER MANAGEMENT			
Ammonia Recovery	X	X	X
Biological Oxidation	X		
Steam Stripper	X	X	
Kettle Evaporator		X	
Reverse Osmosis	X	X	X
Carbon Adsorption	X	X	X
Wet Air Oxidation	X	X	
Vapor Compression Evaporation	X		
Reinjection			X
Multimedia Gravity Filtration		X	
Clarifier	X	X	X
Process Oil/Water Separator	X	X	X
Runoff Oil/Water Separator	X	X	X
Boiler Feedwater Treatment	X	X	X
Cooling Tower Makeup Treatment	X	X	X
Equalization Pond	X	X	X
Aerated Pond			X
Solar Pond	X	X	X

(Continued)

TABLE 1.6-2 (cont.)

Control Technology	PCTMs		
	TOSCO II	MIS-Lurgi	Lurgi-Open Pit
SOLID WASTE MANAGEMENT			
Runoff Collection System	X	X	X
Upper Embankments	X		
Lower Embankments	X	X	
Runon Collection System	X	X	
Stilling Basin	X		
Water Impoundment	X		
Leachate Collection System	X	X	
Spring Collection/Underdrains	X	X	
Covers and Bottom Liners	X	X	X
MIS Spent Retort Treatment		X	
Dust Supression	X	X	X
Surface Reclamation	X	X	X
Piezometers			X

Source: DRI.

1.7 ORGANIZATION AND USE OF THE MANUAL

Following this "Introduction" to the PCTM are six major sections which present material ranging from basic background information to detailed pollution control data and costs. In addition, a complete listing of all information sources used to develop the manual is provided in Section 8 "References." A brief description of each of the major sections is presented below.

Section 2 provides an overview of the TOSCO II retorting process and the case studies examined in the manual. It gives background information on the proposed project development, including the site involved, retorting and

mining processes, and the pollution controls proposed by the developers of the Colony property.

Section 3 expands upon the case studies outlined in Section 2. Detailed process flow diagrams and descriptions are given for each unit process. Individual streams, their mass flow rates, and other characteristics are generated during the unit process analyses, and this information is the basis for detailed stream discussions presented in Section 4.

Section 4 provides the detailed compositions for the major process streams identified in Section 3. These parameters are then used in designing and costing the pollution control technologies discussed in Section 5. All streams identified in Section 3 are inventoried by media (gas, liquid, solid) and important features of each stream are noted (Tables 4.1-1, 4.1-3 and 4.1-5, respectively). Also, the detailed stream compositions are summarized by media (Table 4.1-2, 4.1-4 and 4.1-6).

Section 5 presents concise inventories of the available control technologies and approaches for air, water and solid wastes. Key features of each technology are briefly described and many leading technologies are analyzed in greater depth. The fixed capital and direct annual operating costs and design details for the leading technologies are also presented.

Section 6 presents the total annual and per-barrel cost of pollution control based upon the cost data developed for the control technologies in Section 5 and the standard economic assumptions used in all oil shale PCTMs. This section also analyzes the sensitivity of the control costs to variations in the standard economic assumptions and capital and operating cost parameters.

Section 7 discusses the limitations of the data base used in the preparation of the manual. It also identifies important areas that may require more research.

Table 1.7-1 provides a composite list of the major process and waste streams generated by the facility described in Section 3. All streams are identified with a unique name and number. An asterisk (*) is placed next to the stream number if the stream comes into contact with the environment at any point in the process, and a descriptive letter is given to identify the state of the stream, i.e., gaseous (G), liquid (L) or solid (S). Also, cross-references are included for the flow diagrams in which the stream is produced and/or processed (Section 3), detailed composition tables (Section 4), and applicable control technologies (Section 5) to allow tracking of the stream from its origin to its final disposition.

For example, stream 32 in Table 1.7-1 is the untreated C_2 and lighter gases--a gaseous stream that does not contact the environment. It is produced by processing of the pyrolysis vapors (stream 17) from the TOSCO II retorts, as illustrated in Figure 3.3-4, Section 3. Table 4.2-17 (Section 4) provides the detailed composition of the gases, and Section 5.1.2 ("Sulfur Control") briefly discusses approaches to lower the sulfur content of the gases in order to control the sulfur emissions. Figure 3.3-4 indicates that

TABLE 1.7-1. COMPOSITE LIST OF STREAMS

Stream Number	Description of Stream	Type of Stream	Cross-References: Flow Diagram Numbers	Cross-References: Composition Table Numbers	Cross-References: Control Technology Sections
1*	Raw Shale Feed	S	3.3-2, 3.3-3	4.2-2, 4.2-3, 4.2-4	--
2*	Portal Transfer Point, Baghouse Emission	G	3.3-2	--	5.1.1
3*	Primary Crusher, Baghouse Emission	G	3.3-2	--	5.1.1
4*	Reclaim Tunnel, Baghouse Emission	G	3.3-2	--	5.1.1
5*	Transfer Tower Feed Bin, Baghouse Emission	G	3.3-2	--	5.1.1
6*	Fine Ore Crushing and Screening, Baghouse Emission	G	3.3-2	--	5.1.1
7*	Fine Ore Storage, Baghouse Emission	G	3.3-2	--	5.1.1
8*	Fugitive Dust - Mining	G	3.3-2	--	5.1.1
9*	Baghouse Dusts	S	3.3-2, 3.3-3	--	--
10*	Mine Vent Emission	G	3.3-2	--	5.1.1, 5.1.4, 5.1.5
11*	Mine Ventilation Air	G	3.3-2	--	--
12*	Raw Shale Runoff and Leachate	L	3.3-2, 3.3-15	4.2-5	5.2.1
13	Combustion Air to Ball Heater	G	3.3-3	--	--
14	Combustion Air to Thermal Incinerator	G	3.3-3	--	--
15	Combustion Air to Steam Superheater	G	3.3-3	--	--
16	Quench Air to Lift Pipes	G	3.3-3	--	--
17	Pyrolysis Vapors	G	3.3-3, 3.3-4	--	--
18*	Venturi Emission from Preheat Stack	G	3.3-3	4.2-22, 4.2-23	5.1.1
19*	Venturi Emission from Ball Elutriator	G	3.3-3	4.2-22, 4.2-23	5.1.1
20*	Venturi Emission from Processed Shale Moisturizer	G	3.3-3	--	5.1.1
21*	Raw Shale Sludge from Preheat System	L	3.3-3, 3.3-14	--	5.3.1
22*	Processed Shale Sludge from Ball Elutriator	L	3.3-3, 3.3-14	--	5.3.1

(Continued)

TABLE 1.7-1 (cont.)

Stream Number	Description of Stream	Type of Stream	Cross-References: Flow Diagram Numbers	Cross-References: Composition Table Numbers	Cross-References: Control Technology Sections
23*	Processed Shale Sludge from Moisturizer	L	3.3-3, 3.3-14	--	5.3.1
24	Hot Flue Gas from Steam Superheater	G	3.3-3	4.2-22, 4.2-23	--
25	Superheated Steam	G	3.3-3	--	--
26	Steam from Processed Shale Cooler	G	3.3-3, 3.3-15	--	--
27*	Processed Shale	S	3.3-3, 3.3-14	4.2-6, 4.2-7, 4.2-8	5.3.1, 5.3.2, 5.3.3, 5.3.4
28	Raw Retort Gas from Pyrolysis Fractionator	G	3.3-4	4.2-15	--
29	Foul Water from Pyrolysis Fractionator	L	3.3-4	4.2-26, 4.2-27, 4.2-28	5.2.1, 5.2.2, 5.2.3, 5.2.4
30	Foul Water from Retort Gas Compressor	L	3.3-4	--	5.2.1, 5.2.2, 5.2.3, 5.2.4
31	Total Foul Water Feed to Stripper	L	3.3-4	4.2-28, 4.2-29	5.2.1, 5.2.2, 5.2.3, 5.2.4
32	C_2 and Lighter Gases - Untreated	G	3.3-4, 3.3-5, 3.3-6	4.2-17, 4.2-18, 4.2-19	5.1.2
33	C_2 and Lighter Gases - Treated (Case Studies A, B)	G	3.3-5	4.2-16, 4.2-18	5.1.2
34	C_2 and Lighter Gases - Treated (Case Study C)	G	3.3-6	4.2-19	5.1.2
35	C_3/C_4 Gases - Untreated	G	3.3-4, 3.3-5, 3.3-6	4.2-17, 4.2-20, 4.2-21	5.1.2
36	C_3/C_4 Gases - Treated (Case Studies A, B)	G	3.3-5	4.2-20	5.1.2
37	Foul Water Stripper Overhead	G	3.3-4, 3.3-5, 3.3-12	4.2-29, 4.2-31	5.1.2, 5.2.2
38*	Stripped Foul Water	L	3.3-4, 3.3-13, 3.3-15	4.2-29, 4.2-32	5.2.2, 5.2.3, 5.2.4
39	Steam Condensate from Oil and Gas Recovery System	L	3.3-4, 3.3-15	--	--
40	Stabilized Raw Naphtha from Oil and Gas Recovery System	L	3.3-4, 3.3-11	4.2-12	--
41	Gas Oil from Pyrolysis Fractionator	L	3.3-4, 3.3-10	4.2-12	--
42	Bottoms Oil from Pyrolysis Fractionator	L	3.3-4, 3.3-9	4.2-12	--
43	Combustion Air to Claus Unit	G	3.3-5	4.2-24	--

(Continued)

TABLE 1.7-1 (cont.)

Stream Number	Description of Stream	Type of Stream	Cross-References: Flow Diagram Numbers	Cross-References: Composition Table Numbers	Cross-References: Control Technology Sections
44	Fuel Gas to Ball Heater (Case Studies A, B)	G	3.3-3, 3.3-5	--	5.1.2
45	Fuel Gas to Gas Oil Reboiler (Case Studies A, B)	G	3.3-5, 3.3-10	--	5.1.2
46	Fuel Gas to Wellman-Lord (Case Studies A, B)	G	3.3-5, 3.3-7	4.2-25	5.1.2
47	Fuel Gas to Steam Reformer Furnace (Case Studies A, B)	G	3.3-5, 3.3-8	--	5.1.2
48	Fuel Gas to Delayed Coker (Case Studies A, B)	G	3.3-5, 3.3-9	--	5.1.2
49	Fuel Gas to Gas Oil Hydrotreater (Case Studies A, B)	G	3.3-5, 3.3-10	--	5.1.2
50	Fuel Gas to Naphtha Hydrotreater (Case Studies A, B)	G	3.3-5, 3.3-11	--	5.1.2
51	Fuel Gas to Thermal Incinerator (Case Studies A, B)	G	3.3-3, 3.3-5	--	5.1.2
52	Fuel Gas to Utility Boilers (Case Studies A, B)	G	3.3-5, 3.3-15	--	5.1.2
53	Fuel Gas to Steam Reforming (Case Studies A, B)	G	3.3-5, 3.3-8	--	5.1.2
54	LPG Product (Case Studies A, B)	L	3.3-5	--	5.1.2
55	C_4 Liquid (Case Studies A, B)	L	3.3-3, 3.3-5	--	5.1.2
56	Acid Gas from Amine System (Case Studies A, B)	G	3.3-5	4.2-24	5.1.2
57	Tail Gas from Claus Unit (Case Studies A, B)	G	3.3-5, 3.3-7	4.2-24, 4.2-25	5.1.2
58	Steam from Claus Unit (Case Studies A, B)	G	3.3-5, 3.3-15	--	--
59	Steam Condensate from Claus Unit (Case Studies A, B)	L	3.3-5, 3.3-15	--	--
60	Sulfur Product from Claus Unit (Case Studies A, B)	L	3.3-5	4.2-14	5.1.2
61	Stripping Air to Stretford Unit (Case Study C)	G	3.3-6	--	--
62	Makeup Chemicals to Stretford Unit (Case Study C)	S	3.3-6	--	--

(Continued)

TABLE 1.7-1 (cont.)

Stream Number	Description of Stream	Type of Stream	Cross-References: Flow Diagram Numbers	Cross-References: Composition Table Numbers	Cross-References: Control Technology Sections
63	Fuel Gas to Ball Heater (Case Study C)	G	3.3-3, 3.3-6	--	5.1.2
64	Fuel Gas to Gas Oil Reboiler (Case Study C)	G	3.3-6, 3.3-10	--	5.1.2
65	Fuel Gas to Steam Reformer Furnace (Case Study C)	G	3.3-6, 3.3-8	--	5.1.2
66	Fuel Gas to Delayed Coker (Case Study C)	G	3.3-6, 3.3-9	--	5.1.2
67	Fuel Gas to Gas Oil Hydrotreater (Case Study C)	G	3.3-6, 3.3-10	--	5.1.2
68	Fuel Gas to Naphtha Hydrotreater (Case Study C)	G	3.3-6, 3.3-11	--	5.1.2
69	Fuel Gas to Thermal Incinerator (Case Study C)	G	3.3-3, 3.3-6	--	5.1.2
70	Fuel Gas to Utility Boilers (Case Study C)	G	3.3-6, 3.3-15	--	5.1.2
71	Fuel Gas to Steam Reforming (Case Study C)	G	3.3-6, 3.3-8	--	5.1.2
72	C_3/C_4 Gases - Treated (Case Study C)	G	3.3-6	4.2-21	5.1.2
73	LPG Product (Case Study C)	L	3.3-6	--	5.1.2
74	C_4 Liquid (Case Study C)	L	3.3-3, 3.3-6	--	5.1.2
75	Stretford Oxidizer Vent Gas (Case Study C)	G	3.3-3, 3.3-6	--	5.1.2
76*	Stretford Spent Liquor (Case Study C)	L	3.3-6	--	5.1.2
77	Sulfur Product from Stretford Unit (Case Study C)	L	3.3-6	4.2-14	5.1.2
78	Steam Condensate from Stretford Unit (Case Study C)	L	3.3-6, 3.3-15	--	--
79	Combustion Air to Wellman-Lord Unit (Case Studies A, B)	G	3.3-7	4.2-25	--
80	Caustic to Wellman-Lord (Case Studies A, B)	L	3.3-7	--	--
81	Makeup Na_2SO_3 to Wellman-Lord (Case Studies A, B)	S	3.3-7	--	--

(Continued)

TABLE 1.7-1 (cont.)

Stream Number	Description of Stream	Type of Stream	Cross-References: Flow Diagram Numbers	Cross-References: Composition Table Numbers	Cross-References: Control Technology Sections
82*	Flue Gas from Wellman-Lord Unit (Case Studies A, B)	G	3.3-7	4.2-25	5.1.2
83	Wellman-Lord Acid Gas Recycle to Claus Unit (Case Studies A, B)	G	3.3-5, 3.3-7	4.2-24, 4.2-25	5.1.2
84	Steam Condensate from Wellman-Lord (Case Studies A, B)	L	3.3-7, 3.3-15	--	--
85	High Pressure Steam from Wellman-Lord Waste Heat Boiler (Case Studies A, B)	G	3.3-7, 3.3-15	--	--
86*	Wellman-Lord Condensate (Case Studies A, B)	L	3.3-7, 3.3-15	4.2-25	5.1.2, 5.2.1
87	Makeup HDS Catalyst to Steam Reformer	S	3.3-8	--	--
88	Makeup ZnO Catalyst to Steam Reformer	S	3.3-8	--	--
89	Makeup Fe-Cr Catalyst to Steam Reformer	S	3.3-8	--	--
90	Makeup Cu-Zn Catalyst to Steam Reformer	S	3.3-8	--	--
91*	Flue Gas from Steam Reforming Furnace	G	3.3-8	4.2-22, 4.2-23	5.1.2
92	Acid Gas Recycle to Oil and Gas Recovery Unit - Steam Reformer	G	3.3-4, 3.3-8	--	5.1.2
93	Steam Condensate from Steam Reformer	L	3.3-8, 3.3-15	--	--
94*	Spent Catalysts from Steam Reformer	S	3.3-8, 3.3-14	--	5.3.1
95	Hydrogen to Gas Oil Hydrotreater	G	3.3-8, 3.3-10	--	--
96	Hydrogen to Naphtha Hydrotreater	G	3.3-8, 3.3-11	--	--
97*	Flue Gas from Steam Reformer Regenerator	G	3.3-8	--	--
98	Overhead Gas from Delayed Coker	G	3.3-4, 3.3-9	--	--
99	Foul Water from Delayed Coker	L	3.3-4, 3.3-9	4.2-28	5.2.1, 5.2.2, 5.2.3, 5.2.4

(Continued)

TABLE 1.7-1 (cont.)

Stream Number	Description of Stream	Type of Stream	Cross-References: Flow Diagram Numbers	Cross-References: Composition Table Numbers	Cross-References: Control Technology Sections
100	Naphtha Oil from Delayed Coker	L	3.3-4, 3.3-9	--	--
101	Gas Oil from Delayed Coker	L	3.3-9, 3.3-10	--	--
102	Steam Condensate from Delayed Coker	L	3.3-9, 3.3-15	--	--
103*	Coke	S	3.3-9, 3.3-14	4.2-14	5.3.1
104*	Flue Gas from Delayed Coker	G	3.3-9	4.2-22, 4.2-23	5.1.2
105	Makeup HDN Catalyst to Gas Oil Hydrotreater	S	3.3-10	--	--
106	Overhead Gas from Gas Oil Hydrotreater	G	3.3-4, 3.3-10	--	--
107	Naphtha Oil from Gas Oil Hydrotreater	L	3.3-4, 3.3-10	--	--
108	Diesel Fuel Product from Gas Oil Hydrotreater	L	3.3-2, 3.3-10, 3.3-14	4.2-14	--
109*	Spent Catalysts from Gas Oil Hydrotreater	S	3.3-10, 3.3-14	--	5.3.1
110	Sour Water from Gas Oil Hydrotreater	L	3.3-10, 3.3-12	4.2-30, 4.2-31	5.2.2
111	Gas Oil to Thermal Oxidizer (Case Studies A, B)	L	3.3-3, 3.3-10	--	--
112	Gas Oil to Thermal Oxidizer (Case Study C)	L	3.3-3, 3.3-10	--	--
113	Gas Oil to Ball Heater (Case Studies A, B)	L	3.3-3, 3.3-10	--	--
114	Gas Oil to Ball Heater (Case Study C)	L	3.3-3, 3.3-10	--	--
115	Gas Oil to Steam Superheater	L	3.3-3, 3.3-10	--	--
116	Treated Gas Oil Recycle to Naphtha Hydrotreater	L	3.3-10, 3.3-11	--	--
117	Net Upgraded Gas Oil Product	L	3.3-10	4.2-13	5.1.4
118*	Flue Gas from Gas Oil Feed Furnace	G	3.3-10	4.2-22, 4.2-23	5.1.2
119*	Flue Gas from Gas Oil Reboiler Furnace	G	3.3-10	4.2-22, 4.2-23	5.1.2
120	Makeup HDN Catalyst to Naphtha Hydrotreater	S	3.3-11	--	--

(Continued)

TABLE 1.7-1 (cont.)

Stream Number	Description of Stream	Type of Stream	Cross-References: Flow Diagram Numbers	Cross-References: Composition Table Numbers	Cross-References: Control Technology Sections
121	Overhead Gas from Naphtha Hydrotreater	G	3.3-4, 3.3-11	--	--
122*	Spent Catalysts from Naphtha Hydrotreater	S	3.3-11, 3.3-14	--	5.3.1
123	Naphtha Product	L	3.3-11	4.2-13	5.1.4
124	Sour Water from Naphtha Hydrotreater	L	3.3-11, 3.3-12	4.2-30, 4.2-31	5.2.2
125*	Flue Gas from Naphtha Hydrotreater	G	3.3-11	4.2-22, 4.2-23	5.1.2
126	Caustic to Ammonia Recovery Unit	L	3.3-12	--	--
127	Phosphoric Acid to Ammonia Recovery Unit	L	3.3-12	--	--
128	Overhead Vapors from Ammonia Recovery Unit	G	3.3-5, 3.3-6, 3.3-12	4.2-19, 4.2-24, 4.2-30, 4.2-31	5.1.2
129	Anhydrous Ammonia Product	L	3.3-12	4.2-14	5.1.3
130	Steam Condensate from Ammonia Recovery Unit	L	3.3-12, 3.3-15	--	--
131	Stripped Sour Water to Gas Oil Hydrotreater	L	3.3-10, 3.3-12	4.2-30, 4.2-31	5.2.2
132	Stripped Sour Water to Naphtha Hydrotreater	L	3.3-11, 3.3-12	4.2-30, 4.2-31	5.2.2
133*	Stripped Sour Water Purge Stream	L	3.3-12, 3.3-15	4.2-30, 4.2-31	5.2.1, 5.2.2
134	Phosphorus to Bio-oxidation Unit (Case Study B)	S	3.3-13	--	--
135	Oxygen to Bio-oxidation Unit (Case Study B)	G	3.3-13	--	--
136*	Bio-treated Foul Water (Case Study B)	L	3.3-13, 3.3-15	4.2-32	5.2.4
137*	Bio-oxidation Sludge (Case Study B)	L	3.3-13, 3.3-14	--	5.2.4, 5.3.4
138*	Diesel Emission - Disposal Equipment	G	3.3-14	--	5.1.4, 5.1.5
139*	Fugitive Dust - Disposal	G	3.3-14	--	5.1.1
140*	River Water	L	3.3-15	--	5.2.1
141	Cooling Water to Oil and Gas Recovery Unit	L	3.3-4, 3.3-15	--	5.2.3

(Continued)

TABLE 1.7-1 (cont.)

Stream Number	Description of Stream	Type of Stream	Cross-References: Flow Diagram Numbers	Cross-References: Composition Table Numbers	Cross-References: Control Technology Sections
142	Cooling Water to Stretford Unit (Case Study C)	L	3.3-6, 3.3-15	--	5.2.3
143	Cooling Water to Wellman-Lord Unit (Case Studies A, B)	L	3.3-7, 3.3-15	--	5.2.3
144	Cooling Water to Steam Reformer	L	3.3-8, 3.3-15	--	5.2.3
145	Cooling Water to Delayed Coker	L	3.3-9, 3.3-15	--	5.2.3
146	Cooling Water to Ammonia Recovery Unit	L	3.3-12, 3.3-15	--	5.2.3
147*	Potable and Sanitary Water	L	3.3-15	--	5.2.1
148*	Revegetation Water	L	3.3-14, 3.3-15	--	5.2.1
149*	Dust Suppression Water	L	3.3-2, 3.3-14, 3.3-15	--	5.2.1
150*	Service and Fire Water	L	3.3-15	--	5.2.1
151	Process Makeup Water to Stretford (Case Study C)	L	3.3-6, 3.3-15	--	5.2.1, 5.2.3
152	Process Makeup Water to Wellman-Lord (Case Studies A, B)	L	3.3-7, 3.3-15	--	5.2.1, 5.2.3
153	Boiler Feedwater to Steam Superheater	L	3.3-3, 3.3-15	--	5.2.1, 5.2.3
154	Boiler Feedwater to Processed Shale Cooler	L	3.3-3, 3.3-15	--	5.2.1, 5.2.3
155	Boiler Feedwater to Claus Unit (Case Studies A, B)	L	3.3-5, 3.3-15	--	5.2.1, 5.2.3
156	Boiler Feedwater to Wellman-Lord Unit (Case Studies A, B)	L	3.3-7, 3.3-15	--	5.2.1, 5.2.3
157	Boiler Feedwater to Utility Boilers	L	3.3-15	--	5.2.1, 5.2.3
158*	Processed Shale Moistening Water	L	3.3-3, 3.3-15	--	5.2.1, 5.3.3, 5.3.4
159	Steam to Oil and Gas Recovery Unit	G	3.3-4, 3.3-15	--	--
160	Steam to DEA Unit (Case Studies A, B)	G	3.3-5, 3.3-15	--	--
161	Steam to Stretford Unit (Case Study C)	G	3.3-6, 3.3-15	--	--

(Continued)

TABLE 1.7-1 (cont.)

Stream Number	Description of Stream	Type of Stream	Cross-References: Flow Diagram Numbers	Cross-References: Composition Table Numbers	Cross-References: Control Technology Sections
162	Steam to Wellman-Lord Unit (Case Studies A, B)	G	3.3-7, 3.3-15	--	--
163	Steam to Steam Reformer	G	3.3-8, 3.3-15	--	--
164	Steam to Delayed Coker Feed Heater	G	3.3-9, 3.3-15	--	--
165	Steam to Delayed Coker Drums	G	3.3-9, 3.3-15	--	--
166	Steam to Ammonia Recovery Unit	G	3.3-12, 3.3-15	--	--
167	Total Plant Steam	G	3.3-15	--	--
168*	Boiler Blowdown	L	3.3-15	--	5.2.1
169*	Boiler Feedwater Treatment Concentrate	L	3.3-15	--	5.2.1
170*	Cooling Tower Drift (Case Studies A, B)	L	3.3-15	--	5.2.3
171*	Cooling Tower Drift (Case Study C)	L	3.3-15	--	5.2.3
172	Total Cooling Water	L	3.3-15	--	5.2.1, 5.2.3
173*	Cooling Tower Evaporation (Case Studies A, B)	G	3.3-15	--	5.2.3
174*	Cooling Tower Evaporation (Case Study C)	G	3.3-15	--	5.2.3
175*	Cooling Tower Blowdown (Case Studies A, B)	L	3.3-15	--	5.2.1, 5.2.3
176*	Cooling Tower Blowdown (Case Study C)	L	3.3-15	--	5.2.1, 5.2.3
177*	Storm Runoff	L	3.3-14, 3.3-15	--	5.2.1, 5.3.2
178*	Processed Shale Leachate	L	3.3-14, 3.3-15	4.2-9, 4.2-10, 4.2-11	5.2.1, 5.3.3
179*	Flue Gas from Utility Boilers	G	3.3-15	4.2-22, 4.2-23	5.1.2

* Indicates streams that come into contact with the environment.

Source: DRI.

either Figure 3.3-5 (Case Studies A and B) or Figure 3.3-6 (Case Study C) is the destination for the gases.

Figure 3.3-5 exemplifies the processing of the untreated gases to produce the treated C_2 and lighter gases (stream 33) for which the detailed composition is given in Table 4.2-18. As a result of the treatment, a waste gas (acid gas from the amine system, stream 56), containing most of the hydrogen sulfide originally present in the untreated gases, is produced. This gas can be followed sequentially through Figures 3.3-5 (stream 57) and 3.3-7 (stream 82) to illustrate the recovery of sulfur from the acid gas and additional treatment of the tail gas before it is released into the atmosphere. Other process and waste streams can be followed in a similar manner.

SECTION 2

SUMMARY OF STUDY FEATURES

The Colony Shale Oil Project was initiated in 1964 as a joint venture of The Oil Shale Corporation (a subsidiary of Tosco Corporation), Sohio Petroleum Company, and Cleveland Cliffs Iron Company. The partnership formed the Colony Development Company to operate the project on an oil shale reserve known as the "Colony property," which consists of approximately 8,800 acres located at the head of Parachute Creek Valley in Colorado. Based on The Oil Shale Corporation's previously tested TOSCO II retorting process, a prototype mine and semi-works plant were built and operated from 1965 to 1967, and the design for a 47,000 BPSD (66,000 TPSD) commercial plant was subsequently completed in 1968.

In 1969, Atlantic Richfield Company joined the venture group as the operator and the partnership was renamed the Colony Development Operation. Also in 1969, a second semi-works program was initiated to provide more operating data on the process. Based on this new information, the design and cost estimates for a commercial oil shale plant were updated in 1972. Following this, Colony published its Environmental Impact Analysis (EIA) for the updated plant in 1974. However, because of the unfavorable economics of commercial shale oil production, the project was suspended in 1974 and Sohio Petroleum Company and Cleveland Cliffs Iron Company withdrew from the partnership. In that same year, Shell Oil Company and Ashland Oil, Inc. entered the Colony partnership, but these companies withdrew from the project in 1976 and 1977, respectively. The U.S. Department of Interior's Bureau of Land Management had issued an Environmental Impact Statement (EIS) in 1977, but a decision on granting the requested action (right of way, etc.) was deferred because the Colony project had been suspended indefinitely.

In 1980, Exxon Corporation bought Atlantic Richfield Company's share in the partnership and became the operator for the project. Exxon Corporation and Tosco Corporation pursued the development of the Colony property until May 1982, at which time Exxon announced that it was halting the development of the project. Consequently, Tosco Corporation decided to sell its interest in the project to Exxon. Future plans for the Colony Shale Oil Project are unknown at present.

Prior to this latest suspension of the Colony project, all major Federal and state permits had been issued for the proposed commercial facility, and the EPA had approved a Prevention of Significant Deterioration (PSD) permit (July 1979) under the Clean Air Act. However, additional analyses or statements may need to be prepared and new permits issued in the event that

any reactivated plans vary significantly from the originally proposed development.

2.1 PROCESS OVERVIEW

The case studies presented in this manual are based on the plans proposed by Colony (i.e., the plans upon which all environmental analyses, statements, and permits have been issued). The plant operations include underground mining, TOSCO II aboveground retorting, product upgrading, pollution control, waste disposal and several auxiliary activities.

Mining for the full-scale plant will be performed by the underground room-and-pillar method. This technique is fairly advanced in other industries, such as coal and mineral mining. Additionally, the oil shale zone under the Colony property is quite amenable to this type of mining. The overburden thickness varies from 300 feet to 1,200 feet; therefore, other mining methods such as open pit and strip mining are not suitable. The mineable Mahogany zone under the property has outcropped at various places, and it is easily accessible from the eroded canyon walls. The average zone thickness is about 60 feet and the grade about 35 gpt. Approximately 1.23 billion tons of such oil shale are estimated to be in place. Some 66,000 tons of oil shale from the Mahogany zone will need to be mined daily for the commercial operation, making this operation larger than any existing room-and-pillar mine in the world. Crushing will be achieved by standard crushing equipment.

A full-sized TOSCO II pyrolysis unit is designed to handle 11,000 TPSD of minus 1/2 inch feed material on a 24-hr/day basis; therefore, six such units will be required for the 66,000 TPSD of oil shale processing. Each pyrolysis unit will consist of systems for shale preheating, retorting, shale disposal, product recovery and ceramic ball heating. The gaseous products will be fractionated and cleaned before in-plant use or sale. A portion of the shale oil will be used as plant fuel, while the remainder will be upgraded to produce 47,000 BPSD of a light, sweet syncrude which will be pipelined for further refining. Sulfur and ammonia will be obtained as by-products from the pollution control activities.

Solid wastes will be disposed of in a surface landfill in a nearby shallow valley, using procedures required by the Colorado Mined Land Reclamation Board (CMLRB). Water for the process needs and processed shale moisturizing will be obtained by treatment and reuse of the process wastewaters and from the Colorado River.

If fully exploited by room-and-pillar mining, approximately 62% of the total in-place resource, or 760 million tons, can be recovered from the property (Tosco Corp., December 31, 1980). At the given processing rate of 66,000 TPSD, the resource should last over 30 years. However, in order to be consistent with other oil shale Pollution Control Technical Manuals, a project life of 20 years has been used for costing purposes.

The quantities defining the dimensions of the plant complex are listed in Table 2.1-1. Process related quantities have been estimated primarily

TABLE 2.1-1. MAJOR PARAMETERS DEFINING THE SIZE OF THE COMMERCIAL PLANT COMPLEX

Parameter, Unit	Quantity
Net Oil Produced, BPSD	47,000*
LPG Produced, BPSD	4,330
Retort Gas Produced (C_1-C_2 fraction, dry basis), 10^3 lb/hr	186
Retort Gas Heating Value (LHV, before treatment), Btu/lb	11,400
Retort Gas Heating Value (LHV, after treatment), Btu/lb	22,200
Raw Shale Processed, TPSD	66,000
Raw Shale Grade, gpt	35
Retorting Yield, % Fischer Assay	100
Processed Shale Disposed (dry basis), TPSD	53,400
Processed Shale Moisturizing Water, gpm	1,639
Foul Water Produced, gpm	498
Sulfur Produced, MTPSD	173
Ammonia Produced, TPSD	135-143
Coke Produced, TPSD	800
Fuel Consumed	
Fuel Gas (process fuel), 10^3 lb/hr	80
Fuel Gas (reforming), 10^3 lb/hr	40
C_4 Liquids, 10^3 lb/hr	27
Gas Oil, BPSD	4,900
Shale Processed per Retort, TPSD	11,000
Number of Retorts	6
On-stream Factor, %	
Year 1	50
Year 2	75
Years 3-20	90
Project Duration, years	20
Total Land Area, acres	8,800
Area Mined, acres	4,100
Processed Shale Disposal Area, acres	900
Source Water Consumed, acre-feet/year (bbl/bbl of oil)	8,420-8,540 (4.2-4.3)

* The crude shale oil production is equivalent to 55,000 BPSD, but in-plant use and upgrading reduce the net oil yield to 47,000 BPSD.

Source: DRI estimates based on data from Colony Development Operation, 1974.

from data published by Colony (Colony Development Operation, 1974). These quantities form the basis for the technical analyses and discussions presented in the document.

2.1.1 Site Description

The Colony property is located approximately 15 miles north of the town of Grand Valley, Colorado, as illustrated in Figure 2.1-1. The property covers approximately 8,800 contiguous mineral acres of which about 7,800 acres are believed to overlie the Mahogany oil shale zone.

The proposed mine and plant complex will be situated in the Upper Parachute Creek drainage basin, which is a part of the Grand division of the Upper Colorado River Basin. The entire Colony property is drained by three upper tributaries of Parachute Creek: Davis Gulch, Middle Fork and East Middle Fork. Two other tributaries, namely East Fork and West Fork, drain south of the property into Parachute Creek, which in turn discharges at the north bank of the Colorado River near Grand Valley.

The Parachute Creek tributaries have cut through the plateau-forming sediments to produce a network of steep-sided box canyons, in which rocky and heavily eroded lower slopes rise sharply to meet talus slopes at the base of oil shale cliffs. These canyons measure 1,000 feet in vertical wall height and in excess of 2,000 feet of total valley depths.

Except where eroded to form the deep canyons, the entire Parachute Creek Valley is underlain by the Green River Oil Shale Formation, which is characterized by four members: the Evacuation Creek member, the Parachute Creek member, the Garden Gulch member, and the Douglas Creek member (see Figure 2.1-2). The Parachute Creek member is the most important because it consists of the oil shale. Other mineral resources, such as nahcolite, dawsonite and halite, are usually abundant in the Green River Formation, but the core sample analysis indicates that these minerals are practically absent on the Colony property.

Surface water supplies are scarce, with the exception of the Colorado River. Water production occurs in the form of snow and rain throughout the area. In addition to the Parachute Creek tributaries mentioned above, there are numerous intermittent springs, gulches, and arroyos along the creek. Parachute Creek runs along the valley bottom from an elevation of 6,000 feet to below 5,000 feet. The flow of the creek depends mainly on springs which emerge near or in the creek bed, and they in turn depend on groundwater which varies with the amount of previous precipitation and runoff.

The water quality of Parachute Creek is lower than that of the Colorado River. Degradation caused by irrigation and subsequent drainage through salty soils result in a saline water containing higher concentrations of total dissolved solids, sodium, magnesium, sulfate, etc., than are found in the Colorado River. However, the organic content of Parachute Creek is low relative to the salt content.

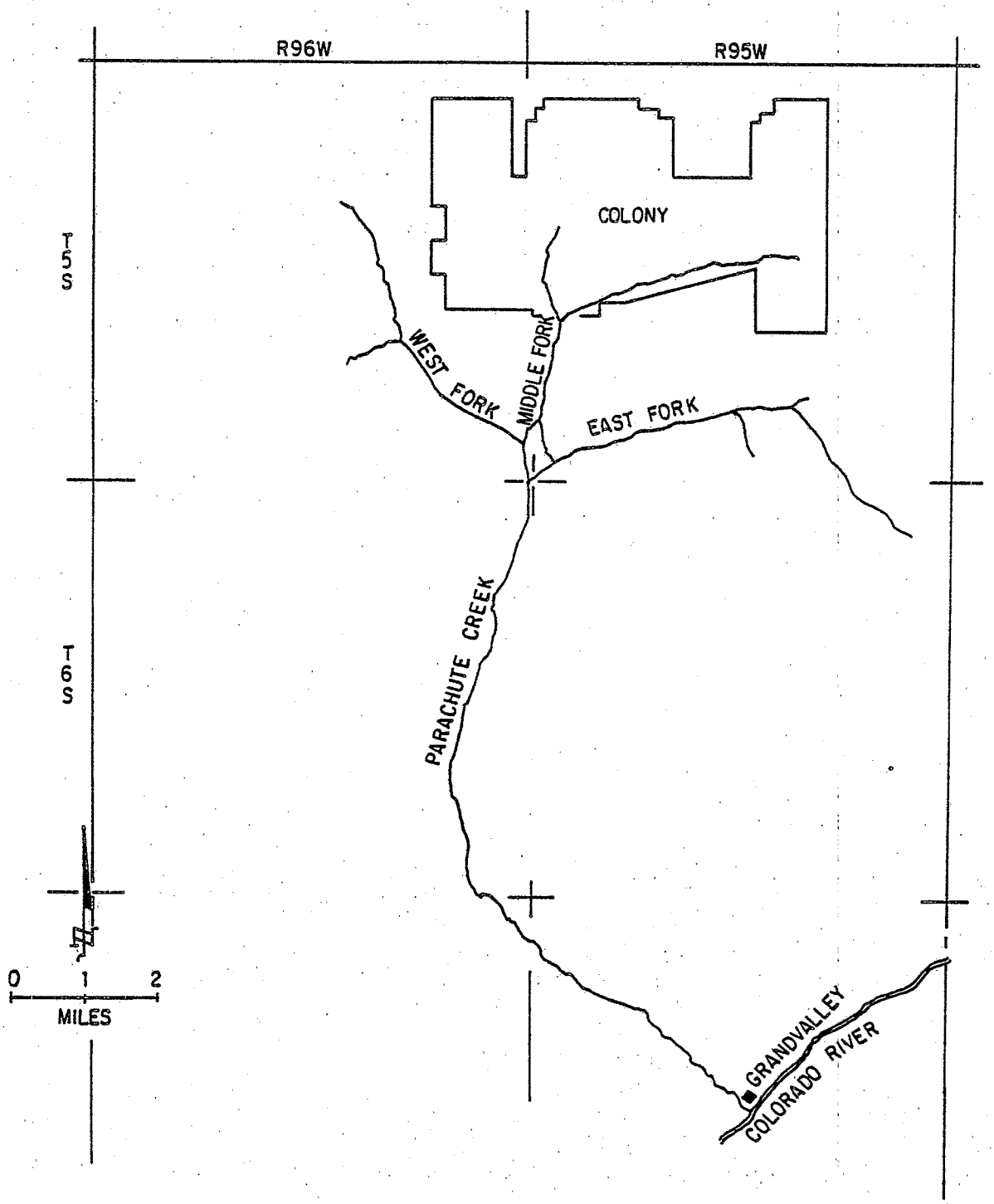

SOURCE: DRI based on Colony Development Operation, 1974

FIGURE 2.1-1 COLONY DEVELOPMENT OPERATION, SITE LOCATION

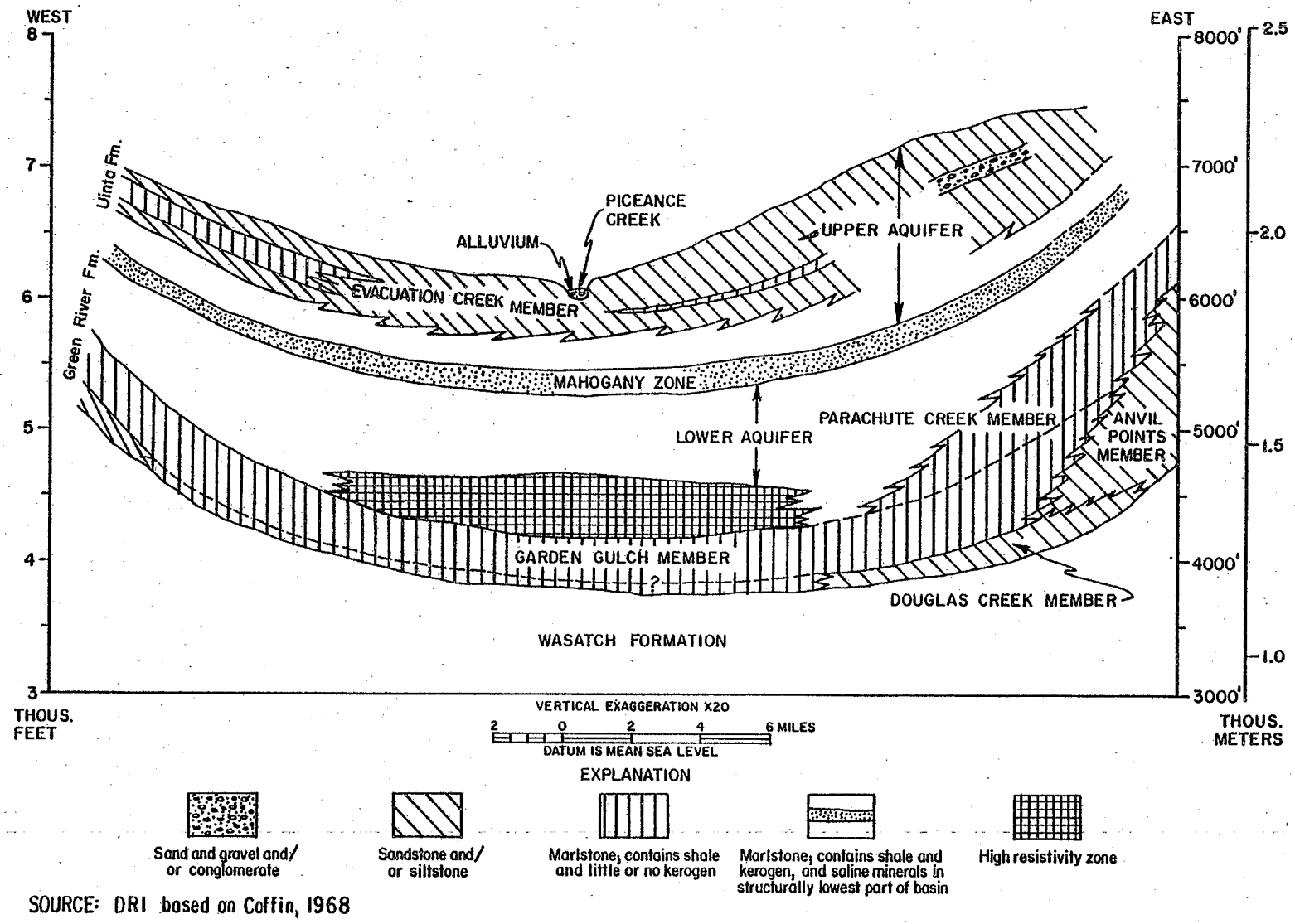

SOURCE: DRI based on Coffin, 1968

FIGURE 2.1-2 GEOLOGIC CROSS SECTION OF PICEANCE CREEK BASIN

There are two known aquifers which underlie the entire Piceance Creek Basin. The upper aquifer is found in the Evacuation Creek member of the formation and exists as a zone of saturation in fractures of the bedrock and pore spaces of the alluvium. The lower aquifer exists between the Parachute Creek member and the Garden Gulch member. The two aquifers are separated by the impervious Mahogany oil shale zone.

The climate of the area is arid, characterized by abundant sunshine, low precipitation, warm summer temperatures and low relative humidity. The local climate is strongly influenced by microclimatic features such as slope, aspect, elevation, soil moisture content, vegetation, etc. Wind patterns are highly influenced by the local topography but are prevalently west-southwest. The downslope of the narrow Parachute Creek valley shields local air flow from gradient wind flow fields. The shielding effects of the mountains to the west also cause an increase in mechanically induced turbulence above the plateau. Average temperatures recorded on the Colony property during the months of July and August are 68° and 67°F, respectively; in January and February, averages are 23° and 25°F. During the summer, strong outgoing terrestrial radiation provides cool nights, while in midwinter, strong solar radiation and dry air provide a pleasant environment despite low temperatures. The vertical temperature profiles are also influenced by the local topography.

2.1.2 Description of the Plant Complex

Figure 2.1-3 shows the relative locations of the mine bench, processing facilities, and processed shale disposal area on the Colony property. The property is divided into two sections: Colony East and Colony West. It is the Colony West property for which the development is planned.

The mine bench will be located on the upper portion of the Middle Fork Canyon. Entry into the mine will be through five portals on the east side of the canyon and three portals on the west side. Primary crushing will be performed on the bench, and the crushed ore will be conveyed to the plant. A coarse ore stockpile will be maintained near the plant.

The processing facilities will be located on Roan Plateau, some 900 feet above the mine bench and to the west. Figure 2.1-4 depicts a plot plan for the facilities which will include six TOSCO II processing trains, or pyrolysis units, fine ore crushing and storage, product upgrading, product tankage, and other auxiliary facilities.

The processed shale disposal area will be located in Davis Gulch, to the north of the processing facilities. The wastes from the plants will be transported to the disposal area in overland covered conveyors and then hauled by truck to the active area of the landfill.

2.1.3 Description of the Retorting Process

A detailed description of the TOSCO II pyrolysis system (retorting, preheating and processed shale removal) is presented below. Section 3

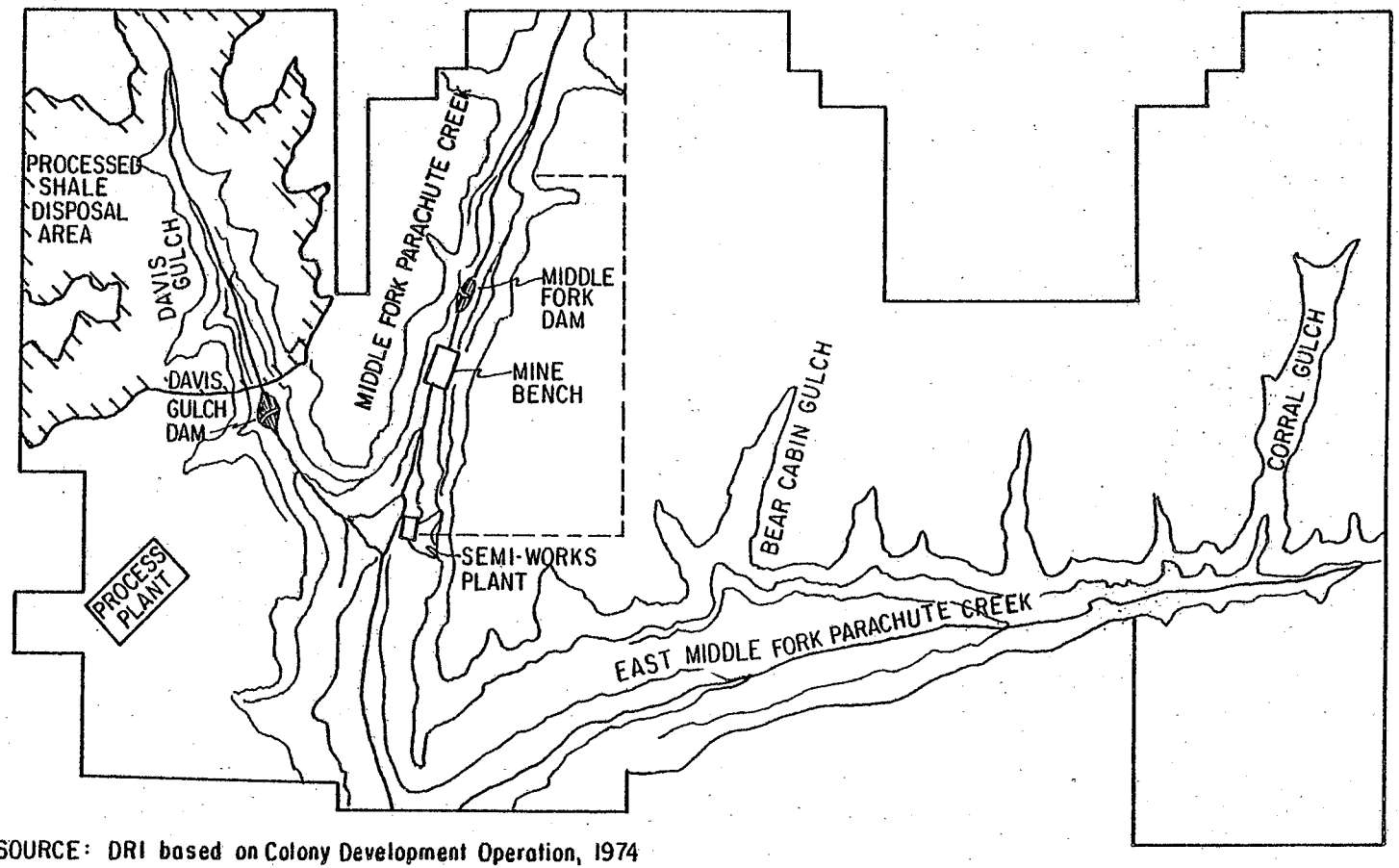

SOURCE: DRI based on Colony Development Operation, 1974

FIGURE 2.1-3 LOCATION OF OVERALL PROCESS ACTIVITIES

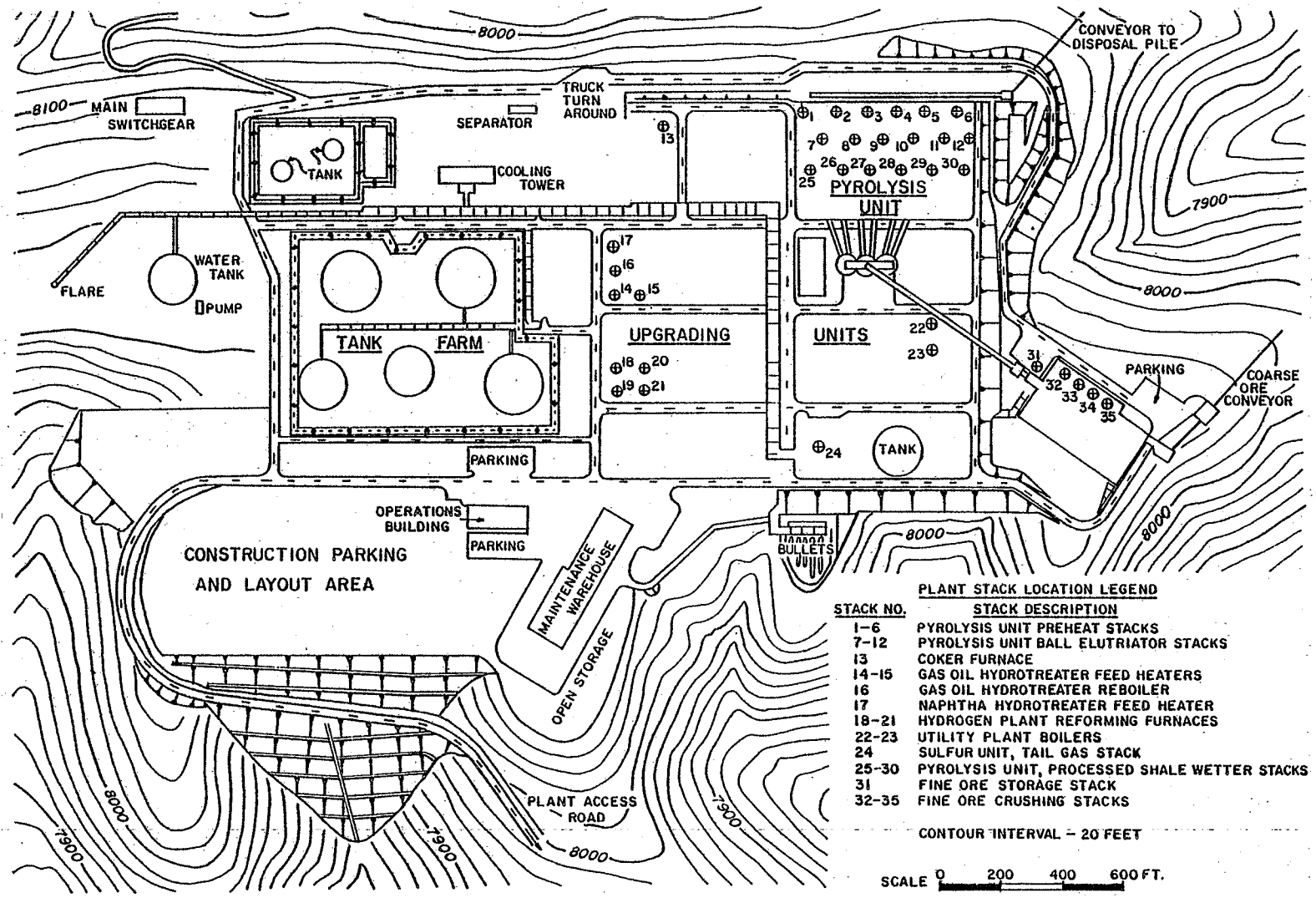

SOURCE: Colony Development Operation, 1974

FIGURE 2.1-4 PLOT PLAN FOR OVERALL PROCESSING FACILITY

presents unit flow diagrams describing the operation of other processing units in the integrated plant complex.

TOSCO II Retorting Process--

Figure 2.1-5 shows a conceptual flow diagram of the TOSCO II retorting process. The process is indirectly heated and employs a solid-to-solid heat exchange (between hot ceramic balls and raw shale) as a means for providing the heat of retorting.

The integral parts of the TOSCO II pyrolysis system are retorting, ball and raw shale heating, product recovery, and processed shale removal systems.

The TOSCO II retort is a horizontal, slightly inclined, rotating drum to which raw shale (minus 1/2-inch size, preheated to approximately 500°F) is fed. Ceramic balls, at 1.5 times the shale mass flow rate, and previously heated to about 1,300°F, are also added to the retort. The rotating, mixing action results in pulverization of the raw shale. Heat transfer from the ceramic balls raises the shale temperature to approximately 900°F, and pyrolysis, or retorting, of the kerogen in the shale occurs. The pyrolysis vapors and the mixture of balls and pyrolyzed shale are then taken to an accumulator vessel. This accumulator consists of a rotating, perforated screen or trommel which retains the balls but allows the pulverized shale to pass through, thus affording a separation of the two. The pyrolysis vapors are removed from the vapor dome at the top of the accumulator and sent to a fractionator for oil recovery, while the ceramic balls are sent for recycling and the processed shale is eventually sent for disposal.

In the oil recovery section, the pyrolysis vapors are separated by fractionation into gas, naphtha oil, gas oil, bottom oil, and gas condensate, or foul water. Each stream is sent to its respective processing unit for appropriate treatment.

Since some processed shale dust is contained with the ceramic balls as they emerge from the accumulator, the balls have to be cleaned before they can be recycled. Dusty balls are dropped into a ball-cleaner vessel where they are blasted by hot flue gas from the steam superheater. The airborne particulate matter is subsequently converted to a sludge in the venturi wet scrubber and sent to the disposal area, and the cleaned flue gas is emitted to the atmosphere through the scrubber stack. The clean ceramic balls are then transported by a bucket elevator to the ball heater for heating and recycling back to the retort.

The hot processed shale from the accumulator is taken to a rotating drum steam generator/cooler where it is cooled to about 300°F by indirect heat transfer to the feedwater, whereby some process steam is generated. The cooled processed shale is then taken to another rotating drum and processed shale moisturizing water is added. Steam incidentally produced during the moisturizing operation entrains some processed shale dust which is removed in the venturi wet scrubber; the steam, along with a little particulate matter, is released to the atmosphere through the scrubber stack. The processed shale, cooled to below 200°F, is moisturized to approximately 14% water by

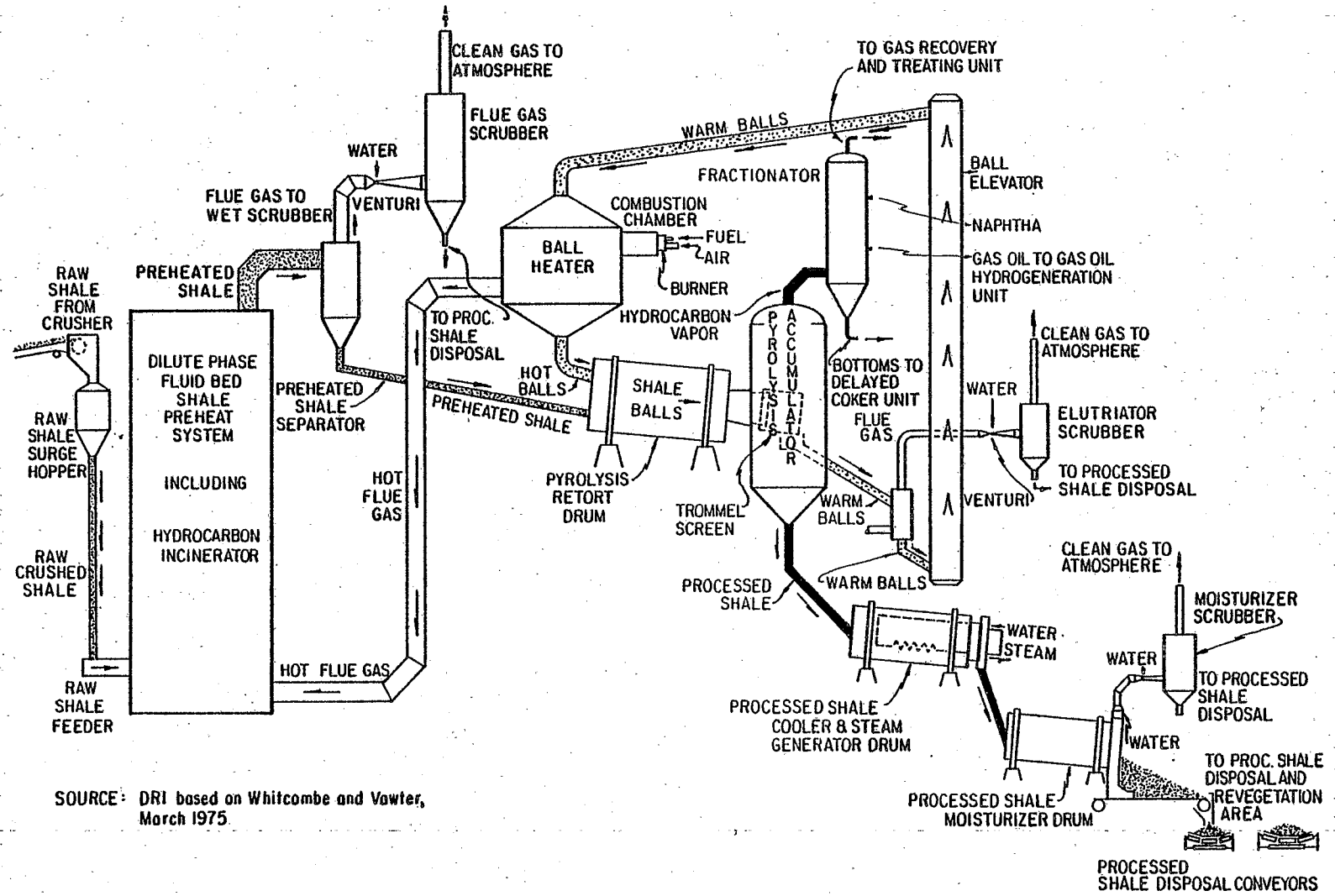

SOURCE: DRI based on Whitcombe and Vawter, March 1975

FIGURE 2.1-5 TOSCO II OIL SHALE RETORTING PROCESS

weight (to aid compaction and dust control) and then transported to the disposal area.

In the ball heater, treated fuel gas and shale oil are burned by atomizing the fuels with air in a vertical combustion chamber at the top of the vessel. Hot flue gas thus generated passes downward, concurrently with the balls, thereby heating them. The flue gas is separated from the balls in the gas disengagers and the hot balls are returned to the retort.

The disengaged hot flue gas is used to preheat the raw shale feed, thereby most of the waste heat is recovered. The preheating system consists of a series of three lift pipes (or preheat zones), a thermal oxidizer (incinerator), cyclones and wet scrubbers. The flue gas is introduced at the bottom of the last lift pipe (first preheat zone), where the raw shale stream from the second lift pipe (second preheat zone) is also received. The solids are lifted pneumatically and heat transfer from the gas to the shale occurs. The preheated shale is accumulated in a collecting bin at the top of the lift pipe and sent to the retort. Residual dust in the flue gas is separated by a cyclone and added to the feed to the retort.

Since the flue gas temperature is at its highest when introduced to the last lift pipe (first preheat zone), it partially retorts the very fine shale, which results in hydrocarbon vapor release into the flue gas. Therefore, the flue gas is introduced to a thermal oxidizer (located between the first and second preheat zones) to burn the hydrocarbons so that the hydrocarbon emission to the atmosphere is not too excessive. Some shale oil, C_4 liquids, and air are also added to the oxidizer to sustain combustion. The resulting flue gas is cooled, by heat recovery in raising some steam, then introduced to the bottom of the other two lift pipes. At this point, the temperature of the flue gas is low enough so that the extent of retorting of the fine shale is less than in the first preheat zone. Hydrocarbons released in these two lift pipes are emitted with the flue gas, without incineration.

All lift pipes operate in a similar fashion, i.e., the accumulated raw shale from a previous lift pipe is introduced to the bottom of the next lift pipe and the flue gas flows in an opposite direction. Finally, after heating the raw shale in the first lift pipe (third preheat zone), the flue gas is wet-scrubbed for dust removal in a high energy venturi scrubber and emitted to the atmosphere. The raw shale feed to the first lift pipe is received from the surge hopper.

The pyrolysis system also includes a shale oil-fired steam superheater which sends superheated steam to various units in the system. The function of this steam is to provide seals for rotating and moving parts, as well as to provide dew point control for the retort vapors. The flue gas from the superheater, as mentioned earlier, is used in dedusting of the ceramic balls.

2.2 POLLUTION CONTROL CASE STUDIES

Three different pollution control case studies have been examined in detail. Two of these cases depict different technologies for air pollution

control (retort gas treatment), while the remaining case considers additional cleanup of the process water. These changes in the otherwise integrated plant have only a minor impact on solid waste disposal; thus, only one approach, based on Colony's CMLRB permit for solid waste disposal, is provided. Although these specific cases are discussed throughout this manual, they are intended to serve as illustrative examples only and should not limit consideration of other alternatives.

Since standard industry practices are adopted for various minor treatments (e.g., boiler feedwater makeup treatment), these are not discussed in detail. The impact on the cost of treatment as a result of variations in the pollution control strategy in other processing areas is assessed, but a detailed analysis of the treatment technology itself is not presented.

2.2.1 Key Features of Pollution Control

One unique feature of this manual that is not included in other oil shale PCTMs is the inclusion of product upgrading. A portion of the retort gas (C_3 hydrocarbons) is upgraded to produce a salable product (LPG), while the shale oil (net amount after in-plant use) is upgraded to reduce its nitrogen and sulfur content, viscosity, and pour point so that the oil can be processed in conventional refineries to yield more useful products. Because of these specified end uses for the upgraded products, the cleanup of the raw materials is considered a part of the process rather than pollution control. However, there are certain caveats which should be emphasized.

The C_3 and C_4 hydrocarbons in the retort gas are separated from the remaining gaseous components as a single stream (see Section 3 for a detailed process description), subjected to removal of H_2S, and then fractionated into LPG and C_4 liquids. The latter is consumed as plant fuel; therefore, the removal of H_2S from C_4 hydrocarbons is essentially a pollution control measure. On the other hand, the LPG product is for sale; therefore, the removal of H_2S from C_3 hydrocarbons could be considered as a part of the process. Thus, a portion of the cost of C_3/C_4 hydrocarbons cleanup may be attributed to pollution control and the remainder to the process. If the C_3 and C_4 hydrocarbons had been fractionated before the removal of H_2S, the distinction between pollution control and process cost components would be clearer.

In the process of removing H_2S from a gaseous feed, either as a pollution control measure or as an integral part of the process, an H_2S-containing waste stream will be produced and its treatment would be considered pollution control.

In the case of oil upgrading, hydrotreatment produces ammonia and hydrogen sulfide as a result of reduction of organically bound nitrogen and sulfur. These species are removed as wastes from the upgraded product and eventually recovered as anhydrous ammonia and elemental sulfur, respectively. Clearly, producing the wastes (by hydrotreatment) is not a pollution control measure, but treating them in order to reduce the potential of pollutant release into the environment is a control measure.

By virtue of indirect retorting, the TOSCO II process produces a carbonaceous processed shale which is disposed of in a surface landfill. This landfill was designed by Colony in accordance with the requirements imposed in the CMLRB solid waste disposal permit.

Underground room-and-pillar mining will be a sizable undertaking. While most of the materials handling and transportation operations will have controls for dust emissions, the mine ventilation system will not employ any particulate controls. Instead, an adequate quantity of air from outside will be circulated in the mine to provide fresh air and also to clear blast fumes, diesel exhaust fumes, and dust so that applicable standards or guidelines are not violated.

2.2.2 Pollution Control Case Studies

The block flow diagrams for the three case studies (A, B and C) examined in this manual are presented in Figures 2.2-1 and 2.2-2. Major pollution control activities are indicated by the heavy-lined boxes in the figures. Case Study A is the base plant as presented in the Colony EIS (U.S. DOI, 1977) and in Colony's PSD permit application (Colony Development Operation, 1977). Case Study B is identical to A in the areas of air pollution control, solid waste disposal, and primary foul water treatment. In addition, it examines a secondary treatment (biological oxidation) for the foul water cleanup, as presented in Colony's EIA (Colony Development Operation, 1974). Case Study C analyzes an alternate technology (Stretford) for the retort gas cleanup, as proposed by several oil shale developers and included as part of the retort gas cleanup system in Colony's EIA; otherwise, Case Study C remains similar to A.

Case Study A: Proposed by Colony--

The basic processing and pollution control systems proposed by Colony are presented in this case study. A process flow diagram is shown in Figure 2.2-1, and a brief overview of the entire process follows.

Mined and crushed shale is preheated with the hot flue gases from the ball heater and then pyrolyzed using hot ceramic balls. The pyrolysis vapors are fractionated into retort gas, naphtha, gas oil, bottoms oil, and foul water, all of which are treated or upgraded before final disposition. The processed shale is separated from the balls and then sent for disposal. Fuels are burned during the course of the process, thereby creating stack emissions. Also, materials handling generates particulate emissions at several points in the process.

Particulate control in the pyrolysis system is achieved by wet scrubbing, while in other operations it is achieved with baghouses. Fugitive dusts are controlled with water and foam sprays. All of these are conventional industry practices. The mine ventilation system does not employ any control.

Catalytic converters on diesel-powered equipment reduce carbon monoxide emissions. Hydrocarbons are also controlled to some extent by these devices.

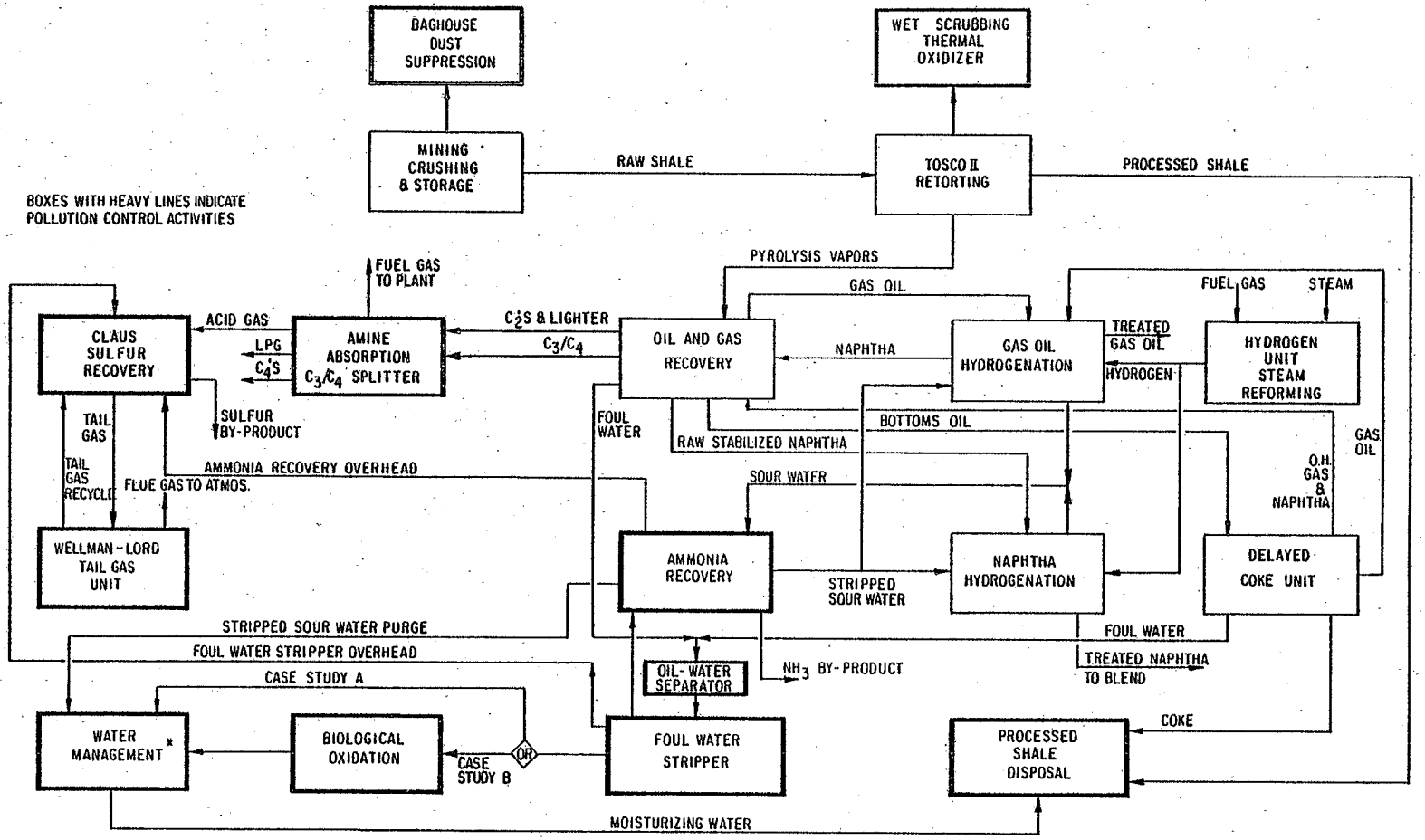

*SEE DISCUSSION IN SEC. 3.3.14
SOURCE: DRI based on Colony Development Operation, 1977 and U.S. DOI, 1977

FIGURE 2.2-1 PROCESS FLOW DIAGRAM, CASE STUDIES A and B

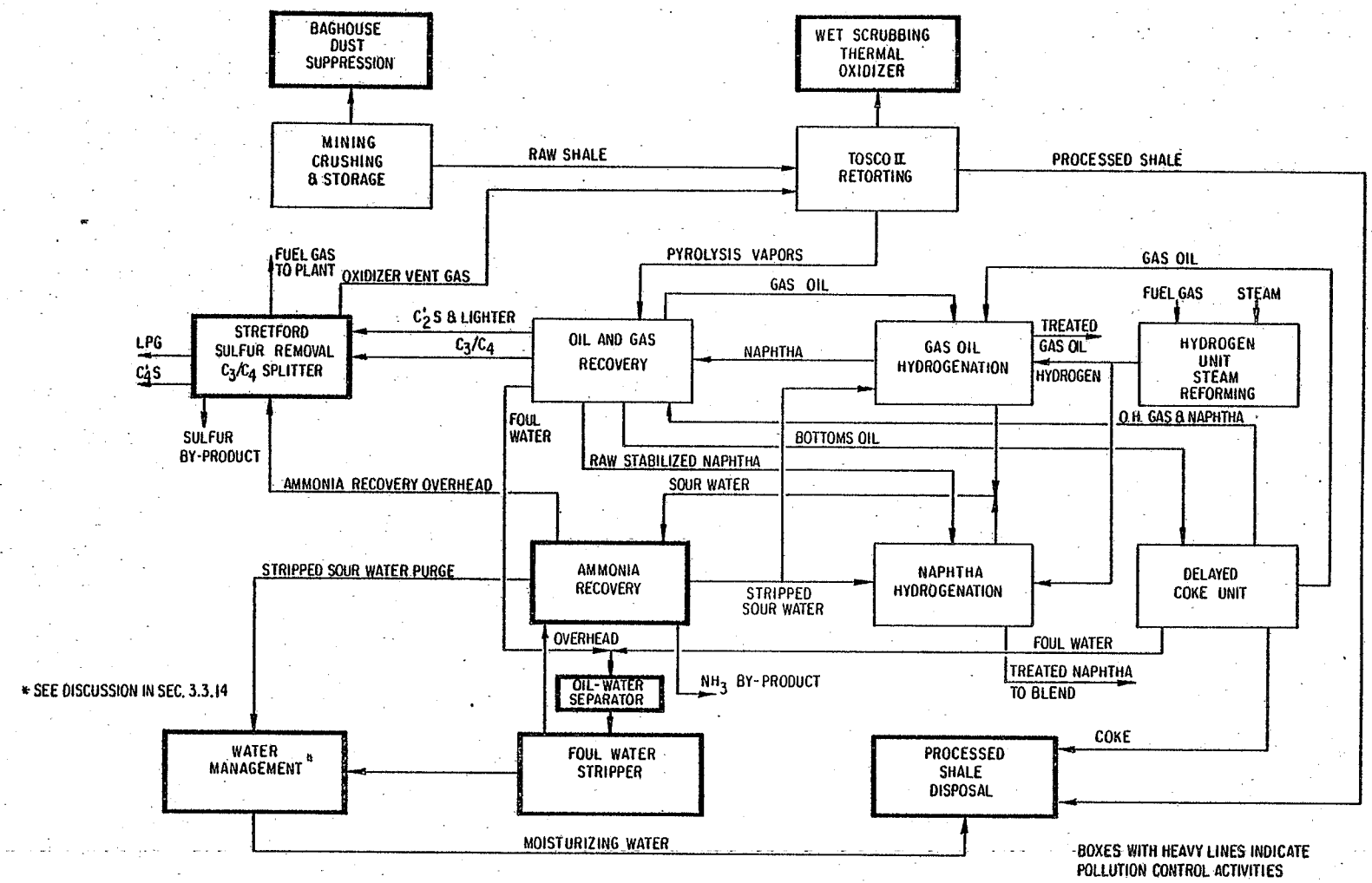

SOURCE: DRI based on Colony Development Operation, 1974

FIGURE 2.2-2 PROCESS FLOW DIAGRAM, CASE STUDY C

The retort gas is further fractionated into C_2 (and lighter) and C_3/C_4 hydrocarbon fractions. Hydrogen sulfide contained in the retort gas is also distributed between the two fractions. Each of these streams is treated for acid gas removal by absorption in diethanolamine (DEA); two individual DEA absorbers with a common regenerator are used to keep the streams separate. The acid gas-free C_2 and lighter gas is then used as plant fuel and in steam reforming. The C_3/C_4 fraction is further divided into LPG (C_3) for sale and C_4 liquids for in-plant consumption.

The DEA regenerator overhead gas (acid gas) is sent to a Claus sulfur plant for recovery of elemental sulfur. The tail gas stream from the Claus, containing unrecovered sulfur compounds, is fed to a Wellman-Lord unit which converts most of the sulfur compounds to sulfur dioxide, which is then recycled back to the Claus unit. Finally, the Wellman-Lord overhead gas containing some sulfur compounds is incinerated and emitted to the atmosphere. Thus, the DEA system, Claus sulfur plant, and Wellman-Lord tail gas unit provide control over sulfur emissions by removing sulfur containing species from the retort gas.

The naphtha and gas oil are hydrotreated with hydrogen from steam reforming. Nitrogen and sulfur in these oils are reduced to ammonia and hydrogen sulfide which are then removed by washing with water and in the overhead vapors. The wash or sour water is subjected to recovery of ammonia as an anhydrous product by an ammonia recovery process (e.g., Phosam-W). The hydrogen sulfide containing overhead gas from the ammonia recovery unit is sent to the Claus unit for recovery of sulfur. The stripped sour water from the ammonia recovery unit is recycled back to the hydrotreaters for reuse as wash water. In this manner, the ammonia recovery process provides an indirect control over nitrogen oxides emission by recovering ammonia from the fuels prior to their combustion.

The foul water, or gas condensate, containing dissolved ammonia, hydrogen sulfide, and organics, is steam stripped to remove these compounds. The stripped water, still containing significant amounts of dissolved organics, is used in processed shale moisturizing. The stripper overheads are directed to the Claus unit which converts the hydrogen sulfide to elemental sulfur and the ammonia to elemental nitrogen. By removing ammonia and hydrogen sulfide from the foul water, the steam stripper aids in controlling the pollution from these species.

The bottoms oil (or residuum) from the pyrolysis fractionator is coked to produce gas, naphtha, gas oil and coke. The first three streams are sent to their respective treatment and upgrading units, while the coke is disposed of with the processed shale. The coke can be sold if a commercial market exists for it; however, this is unlikely because the coke will have a high ash content due to the accumulation of particulates and asphaltines in the bottoms oil. Steam used for cutting the coked material condenses overhead to produce a small amount of foul water which is sent to the foul water stripper.

The processed shale and other plant wastes are disposed of in a surface landfill based on a design which has been permitted by the CMLRB.

Proper maintenance of valves, pumps, etc., and suitable product storage tanks provide control over fugitive hydrocarbon emissions.

Conventional water management practices (source water clarification, boiler feedwater softening, cooling water treatment, etc.) produce sludges and brines which are disposed of with the processed shale.

Case Study B: Foul Water; Biological Oxidation--

This case study examines cleanup of the steam-stripped foul water by biological oxidation. It is identical to the base case study (A) in all other aspects. A block flow diagram for this case study is included in Figure 2.2-1.

The foul water contains a substantial amount of dissolved organic matter. Approximately 80% of this amount is assumed to remain in the water after steam stripping. While it is possible that the steam-stripped foul water might be suitable for processed shale moisturizing, it is also possible that some additional control of organics may be necessary to meet specific requirements. A biological oxidation system is used in this case study to control the biologically degradable material in the stripped foul water. The bio-treated water is then used in processed shale moisturizing.

Case Study C: Retort Gas; Stretford Sulfur Recovery--

This case study is the same as the pollution control system in Case Study A, except that the Stretford sulfur process is used instead of the DEA, Claus and Wellman-Lord processes. The use of DEA and Stretford was proposed by Colony in its EIA (Colony Development Operation, 1974). The Stretford process is a technology that has been historically favored by the oil shale developers. A flow diagram for this case study is presented in Figure 2.2-2. The design was provided by a commercial vendor and is based on technology currently in use in the petroleum industry.

Two separate Stretford absorbers--one for the C_2 and lighter fraction and the other for the C_3/C_4 fraction--with a common regenerator are used to convert the hydrogen sulfide in the retort gas into elemental sulfur. Unlike the DEA system, the Stretford process removes only a small amount of carbon dioxide from the gas stream; therefore, the treated gases will contain about 94% of the original amount of carbon dioxide, thereby decreasing the heating value.

The Stretford process will also generate an additional stream: the oxidizer vent gas. A large amount of air is used to regenerate or oxidize the Stretford solution. This stripping air is then used in the ball heater as a supplemental source of combustion air, thus it is not emitted directly to the atmosphere. Also, adsorption on the fine raw shale in the lift pipes and scrubbing in high energy wet scrubbers would reduce the emission of sulfur dioxide resulting from the oxidizer vent gas.

2.3 SUMMARY OF POLLUTION CONTROL TECHNOLOGIES AND COST

The control technologies examined in the case studies are summarized in Table 2.3-1. As a means of organizing the presentation, the plant complex is divided into different areas of processing activities and pollution control. It should be noted that the control technologies examined here are not the only choices available nor are they necessarily sufficient for pollution control; rather, they are merely examples from broad classes of technologies. These examples have been examined on the basis that they have been proposed at one time or another by oil shale developers. Additionally, good vendor guarantees and cost data on these technologies were available for the economic analysis.

Throughout this analysis of the TOSCO II project, the distinction between process and pollution control is not always clear. For example, the diethanolamine treatment of the C_3 hydrocarbons could be considered a pollution control measure because it affords removal of H_2S. However, since the main purpose behind the treatment is to sell the gas as LPG and not to use it on site, the treatment could be considered a processing step. Similarly, boiler feedwater treatment, cooling tower makeup treatment, source water clarification, etc., are listed as pollution control measures, when they may also be classified as process related activities. In some such instances--for example, the cooling tower makeup treatment--only the cost increase due to the pollution control activities is included, but this distinction is not always possible. Consideration of an activity as a pollution control or as a process related activity becomes important when calculating the total cost of pollution control. Because all of the borderline activities are classified as pollution control, the user of this manual should be made aware that the total pollution control costs are conservatively stated due to the inclusion of activities which could also be considered process related.

Table 2.3-2 lists the control technologies examined in the case studies, along with information describing location, control function and size. The case study in which each control is shown is also indicated. More detailed design information for the technologies is presented in Section 5. A discussion of other possible control choices is also given in that section.

Table 2.3-3 summarizes the costs of air pollution control, water management and pollution control, and solid waste management for the three case studies analyzed for the TOSCO II facility. Detailed engineering costs for the technologies analyzed and the cost computation methodology are presented in Section 6.

In the area of air pollution control, Case Studies A and B are identical, with both including the DEA/Claus/Wellman-Lord technologies for the control of sulfur. In Case Study C, the Holmes-Stretford sulfur recovery process was analyzed as the control. The Stretford process has somewhat lower fixed capital and direct annual operating costs than those for the DEA/Claus/Wellman-Lord system; this is reflected in the lower total annual operating cost, total annual control cost, and per-barrel control costs for Case Study C.

TABLE 2.3-1. SUMMARY OF POLLUTION CONTROL TECHNOLOGIES

Case Study	Areas of Control					
	Mining, Crushing and Materials Handling	Preheating and Retorting	Retort Gas Treatment	Process Water Treatment	Steam, Power Generation	Solid Waste Management
A	Baghouses Water and Foam Sprays	High Energy Venturi Wet Scrubbers Venturi Wet Scrubbers Thermal Oxidizers	DEA Acid Gas Removal System Claus Sulfur Plant Wellman-Lord Tail Gas Unit	Foul Water Stripper Ammonia Recovery Unit	Low sulfur fuels used for steam generation; no control necessary Waste heat recovery	Surface Landfill for all wastes
B	Same as A	Same as A	Same as A	Foul Water Stripper Ammonia Recovery Unit Biological Oxidation Unit	Same as A	Same as A
C	Same as A	Same as A	Stretford Sulfur Plant	Same as A	Same as A	Same as A

Source: Colony Development Operation, 1974, 1977 and March 1980; Colorado Mined Land Reclamation Board, October 23, 1980; U.S. EPA, July 11, 1979.

TABLE 2.3-2. INVENTORY OF MAJOR POLLUTION CONTROL TECHNOLOGIES

Type of Control (Number of Units)	Origin of Material Controlled	Material Controlled	Flow Rate Each Unit	Processing Activity Area	Case Study
Water and Foam Sprays	Mine, Open Stockpiles, Conveyor Transfer Points	Raw Shale and Processed Shale Dust	--	Mining, etc.	All
Fabric Filter (1)	Portal Transfer Point	Raw Shale Dust	5,100 ACFM	Mining, etc.	All
Fabric Filter (1)	Primary Crusher	Raw Shale Dust	62,100 ACFM	Mining, etc.	All
Fabric Filter (1)	Reclaim Tunnel	Raw Shale Dust	48,000 ACFM	Mining, etc.	All
Fabric Filter (1)	Transfer Tower Feed Bin	Raw Shale Dust	44,000 ACFM	Mining, etc.	All
Fabric Filter (4)	Fine Crusher	Raw Shale Dust	72,000 ACFM	Mining, etc.	All
Fabric Filter (1)	Fine Ore Storage	Raw Shale Dust	36,000 ACFM	Mining, etc.	All
Thermal Oxidizer (6)	Raw Shale Preheat System	Hydrocarbons	346,700 ACFM	Shale Preheating (pyrolysis)	All
High Energy Venturi Wet Scrubber (6)	Raw Shale Preheat System	Raw Shale Dust	212,000 ACFM	Shale Preheating (pyrolysis)	All
Venturi Wet Scrubber (6)	Ball Circulation System	Processed Shale Dust	44,300 ACFM	Ball Circulation (pyrolysis)	All
Venturi Wet Scrubber (6)	Processed Shale Moisturizer	Processed Shale Dust	44,400 ACFM	Processed Shale Wetting (pyrolysis)	All
DEA Acid Gas Removal System (2 absorbers, 1 regenerator)	Gas Recovery Unit	Acid Gases	6,700 ACFM	Retort Gas Treatment	A,B
Claus Sulfur Plant (1)	DEA Acid Gas System	H_2S	14,500 ACFM	Retort Gas Treatment	A,B
Wellman-Lord Tail Gas Unit (1)	Claus Sulfur Plant	H_2S	25,000 ACFM	Retort Gas Treatment	A,B
Stretford Sulfur Plant (2 absorbers, 1 regenerator)	Gas Recovery Unit	H_2S	6,700 ACFM	Retort Gas Treatment	C
Oil/Water Separator (1)	Retort Product Fractionator	Oil Suspended in Water	498 gpm	Foul Water Treatment	All
Foul Water Stripper (1)	Oil/Water Separator	NH_3, H_2S and Volatile Organics in Water	498 gpm	Foul Water Treatment	All
Ammonia Recovery Unit (1)	Hydrotreaters	NH_3 and H_2S in Water	510 gpm	Sour Water Treatment	All
Biological Oxidation Unit (1)	Stripper Bottoms	Organics in Water	468 gpm	Foul Water Treatment	B

(Continued)

TABLE 2.3-2 (cont.)

Type of Control (Number of Units)	Origin of Material Controlled	Material Controlled	Flow Rate Each Unit	Processing Activity Area	Case Study
Double Seal Floating Roof Oil Storage Tank (3)	Product Storage	Hydrocarbons	370,000 bbl (total)	Miscellaneous Air Treatment	All
Ammonia Storage Tank (2)	Ammonia Recovery Unit	Ammonia	135-143 TPSD	Miscellaneous Air Treatment	All
Catalytic Converters	Diesel Equipment	Hydrocarbons, Carbon Monoxide	--	Miscellaneous Air Treatment	All
Low Flare and Thermal Oxidizer	Plant Upset Situations	Hydrocarbons	--	Miscellaneous Air Treatment	All
Proper Maintenance of Valves, Pumps, etc.	Valves, Pumps, etc.	Hydrocarbons	--	Miscellaneous Air Treatment	All
Boiler Feedwater Treatment (2)*	River Water	Calcium in Water	760 gpm	Miscellaneous Water Treatment	All
Cooling Tower Makeup Treatment (1)*	River Water	Calcium Carbonate in Water	3,060 gpm	Miscellaneous Water Treatment	A,B
Cooling Tower Makeup Treatment (1)*	River Water	Calcium Carbonate in Water	3,292 gpm	Miscellaneous Water Treatment	C
Equalization Pond (1)	Water Treatments	Blowdowns, Runoff, Concentrates, etc.	~2,700 gpm	Miscellaneous Water Treatment	All
Runoff Oil/Water Separator (1)	Plant Site Storm Sewer	Plant Runoff	126 gpm	Miscellaneous Water Treatment	All
River Water Clarifier (4)*	River Water	Suspended Matter	~6,000 gpm	Miscellaneous Water Treatment	All
Runon Diversion System	Davis Gulch Watershed	Leachable Compounds	--	Surface Hydrology	All
Runoff Collection System	Waste Landfill	Leachable Compounds	--	Surface Hydrology	All
Runoff Catchment Embankment (1)	Waste Landfill	Leached Compounds	--	Surface Hydrology	All
Surface Cover	Waste Landfill	Leachable Compounds	--	Subsurface Hydrology	All
Bottom Liner	Waste Landfill	Leached Compounds	--	Subsurface Hydrology	All
Groundwater Collection System	Waste Landfill	Leachable Compounds	--	Subsurface Hydrology	All

(Continued)

TABLE 2.3-2 (cont.)

Type of Control (Number of Units)	Origin of Material Controlled	Material Controlled	Flow Rate Each Unit	Processing Activity Area	Case Study
Leachate Collection System	Waste Landfill	Leached Compounds	--	Subsurface Hydrology	All
Dust Suppression	Waste Landfill	Particulates	--	Surface Stabilization	All
Grubbing, Stripping and Clearing	Waste Landfill	Soil (erosion)	--	Surface Stabilization	All
Reclamation and Revegetation	Waste Landfill	Soil (erosion)	--	Surface Stabilization	All

* The technologies marked with an asterisk (*) could be considered part of the process as well as pollution control.

Source: DRI based on information from Colony Development Operation, 1974, 1977, and March 1980.

TABLE 2.3-3. POLLUTION CONTROL COST SUMMARY*

Control Medium	Fixed Capital Cost ($000's)	Total Annual Capital Charge ($000's)	Total Annual Operating Cost ($000's)	Total Annual Control Cost ($000's)	Per-barrel Control Cost (cents)
CASE STUDY A					
Air Pollution	106,400	18,093	33,586	51,679	335
Water Management and Pollution Control	7,385	1,519	425	1,944	13
Solid Waste Management	5,397	691	3,800	4,492	29
CASE STUDY B					
Air Pollution	106,400	18,093	33,586	51,679	335
Water Management and Pollution Control	9,451	1,862	916	2,778	18
Solid Waste Management	5,397	691	3,800	4,492	29
CASE STUDY C					
Air Pollution	91,760	15,499	26,489	41,988	272
Water Management and Pollution Control	7,595	1,570	308	1,878	12
Solid Waste Management	5,397	691	3,800	4,492	29

* See Section 6 for details.

Source: DRI.

In the area of water management and pollution control, Case Studies A and C are essentially the same, except that the ammonia recovery unit in Case Study C is slightly larger than the one used in Case Study A due to processing of the foul water stripper overhead vapors. As a result, the fixed capital cost for Case Study C is higher; however, this is more than offset by a larger by-product credit from the recovered ammonia. In Case Study B, biological oxidation of the stripped foul water was analyzed as an additional wastewater treatment, causing the overall water treatment costs to be higher than those for Case Study A or B.

The costs for solid waste management are identical in all three case studies.

SECTION 3

PROCESS FLOW DIAGRAMS AND FLOW RATES

Flow diagrams illustrating all operations in the TOSCO II plant complex are presented in this section. The integrated designs shown are consistent with the development plans proposed by Colony.

3.1 STRUCTURE OF THE DIAGRAMS

In order to understand the interactions throughout the plant complex, an overall flow diagram is presented first, followed by flow diagrams for each unit process. Flow rates for all major process and waste streams are indicated on each of the more detailed diagrams; flow rates for streams of an auxiliary nature, such as cooling water and steam, are included only when relevant to pollution control activities. The following symbols are used to indicate the physical state of each stream:

- Gases--Circles
- Liquids--Squares
- Solids--Hexagons.

A unique stream number is placed within each symbol. In addition, an asterisk (*) is placed next to the symbol for a stream if it comes into contact with the environment at any point in the process. The stream numbering system established in this section is used throughout this manual.

3.2 OVERALL PLANT COMPLEX

The flow diagram of the complete plant complex, emphasizing the waste streams produced, is presented in Figure 3.2-1. Production-scale mining of the oil shale will be accomplished by conventional underground room-and-pillar mining. Initial excavation will begin from a portal bench constructed in the upper section of the Middle Fork Canyon, at an elevation of about 7,000 feet, at which point the Mahogany oil shale zone outcrops on opposite sides of the canyon. The excavated shale will be primary-crushed at the portal bench and then conveyed to the plant site on the Roan Plateau, approximately 900 feet above the bench, where the raw shale will be fine-crushed and fed to the retorts. The mining, crushing, and conveying operations will generate particulate emissions.

The retorting will be accomplished by mixing the raw shale with hot ceramic balls in rotating, drum-type retorts. The pyrolysis vapors will be fractionated into retort gas, foul water, naphtha oil, gas oil, and bottoms

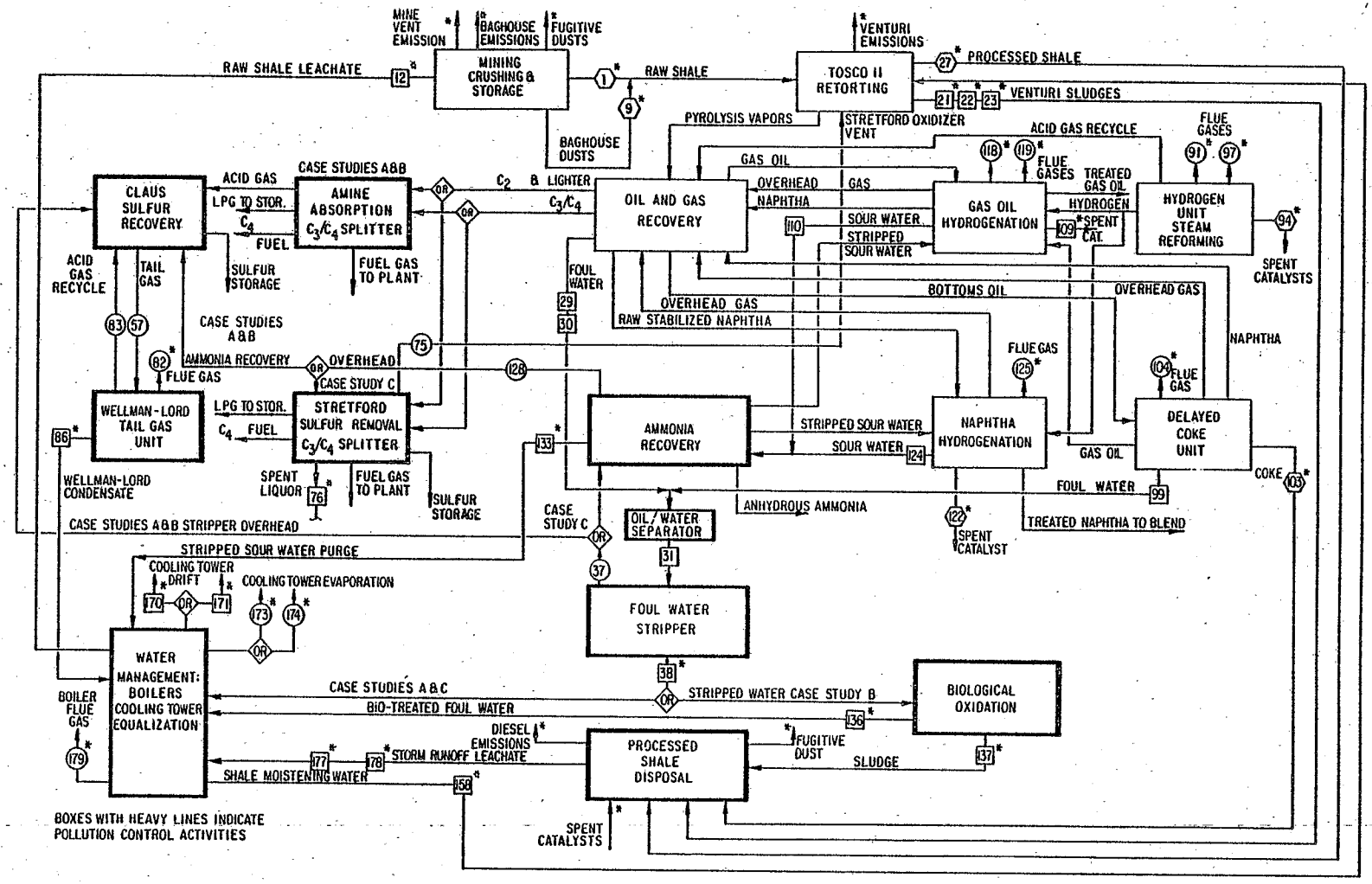

FOR LEGEND SEE FIGURE 3.3-1

SOURCE: DRI based on Colony Development Operation, 1974, and U.S. DOI, 1977

FIGURE 3.2-1 PROCESS OPERATIONS AND WASTE STREAMS

oil and sent for treatment to different sections of the plant. The ceramic balls are heated by direct combustion of process fuels in the ball heater. This, along with raw shale preheating, will create a flue gas emission containing entrained particulates. The ball dedusting and processed shale cooling and moisturizing operations will also generate flue gas and particulate emissions. Additionally, these operations produce particulate sludges because of final wet scrubbing of the flue gas streams.

In Case Studies A and B, the acid gases (H_2S, CO_2) in the retort gas are separated by absorption in a diethanolamine solution as a pretreatment step. The treated sweet gas is eventually separated into C_4 liquids, LPG, and C_2 and lighter process gas. Sulfur from the acid gases is recovered by the Claus/Wellman-Lord processes. A tail gas stream containing a small amount of sulfur dioxide is eventually emitted from the Wellman-Lord unit. An acidic condensate is also obtained from the Wellman-Lord unit; it is neutralized with alkali and then sent for disposal.

In Case Study C, the hydrogen sulfide in the retort gas is directly converted to elemental sulfur by the Stretford sulfur recovery process. Neither a pretreatment step nor a tail gas unit is necessary. Any unconverted sulfur compounds are released in the oxidizer vent gas which is used as a source of combustion air in the ball heater; thus, there is no direct emission from the Stretford process. The spent Stretford liquor is removed periodically and sent for reclamation.

The naphtha and gas oils are hydrotreated to produce upgraded syncrude. An ammoniacal wash water is produced from the hydrogenation and subjected to an ammonia recovery process. This latter process produces a sulfurous overhead which is sent either to the Claus plant (Case Studies A and B) or to the Stretford plant (Case Study C) for recovery of sulfur. The hydrotreatment operations consume process gas, thereby generating flue gases. The ammonia plant does not burn any fuels.

The bottoms oil is coked to yield a gaseous overhead, naphtha oil, and gas oil which are sent to their respective units for treatment, and a "green coke" residue which is disposed of with the processed shale. A small amount of aqueous condensate is also produced and sent to the foul water stripper. A gas-fired furnace is used for heating the feed to the coke drums. The flue gas from the furnace is emitted to the atmosphere.

Hydrogen for the oil hydrotreating is generated by steam reforming, using the treated process gas (C_2 and lighter fraction). The reforming furnaces burn fuel and generate a flue emission. Carbon dioxide, generated as a result of reforming, is separated from the hydrogen and is also released to the atmosphere.

The foul water condensed from the pyrolysis vapors is steam stripped to remove volatile matter which is sent to the Claus plant for recovery of sulfur. Ammonia in the stripper overheads is converted to elemental nitrogen during incineration in the Claus process. The stripped water either is used in processed shale moisturizing (Case Studies A and C) or it is treated further using biological oxidation (Case Study B) to reduce the biodegradable

organic matter. Bio-oxidation yields a cleaner water which is used in processed shale moisturizing and a sludge for disposal or possible use in revegetation if its composition is determined to be acceptable.

Water management activities in all case studies produce cooling tower evaporation and drift, boiler blowdown, clarifier sludge, and boiler feedwater treatment concentrate, all of which are either emitted to the atmosphere or used in processed shale moisturizing and thus come into contact with the environment. Also, materials handling produces fugitive dust, product storage generates hydrocarbon emissions, and diesel-powered equipment emit exhaust gases into the atmosphere.

The individual processing and pollution control activities that form the integrated plant are discussed below.

3.3 UNIT PROCESS FLOW DIAGRAMS

This section describes the operation of the TOSCO II plant complex in more detail using flow diagrams for each unit process in the plant. Figure 3.3-1 is intended to be used as a road map showing the relationship between the unit process flow diagrams for all case studies. Each box (except the product storage boxes) in the figure represents an individual flow diagram, and the appropriate figure number for each diagram is indicated. All streams are numbered as well. A complete list of all the streams, in numerical order, is included in Section 1.7, Table 1.7-1.

The individual, unit process flow diagrams are presented throughout this section (see Figures 3.3-2 through 3.3-15); also, Figures 3.3-16 through 3.3-18 provide details on the water management system for the entire plant complex. In each diagram, streams enter on the left and exit on the right, and mass flows are given at the bottom. Composition data on major process and waste streams can be found in Section 4.

3.3.1 Mining, Crushing and Transport of Raw Shale

As mentioned earlier, the underground mining will be carried out from a mine bench laterally traversing the upper portion of the Middle Fork Canyon. The mine bench will occupy approximately six acres and will contain a primary crusher, mine office, equipment service station, etc. Mine entry will be from eight 30-ft by 30-ft adits on the canyon walls, five on the east and three on the west. The conventional mining cycle (e.g., drilling, charging, blasting, wetting of the broken rock pile, loading, hauling, scaling and roof bolting) will yield approximately 66,000 TPSD of raw shale. The broken shale will be loaded in 60- to 90-ton dump trucks with the aid of large front-end loaders. Optimum room and pillar size is estimated to be 60 feet on each side. The underground mine will eventually traverse over 4,000 acres under the Colony West property during the 20-year project life. Several forced-air mine ventilation openings will provide fresh air in the mine and will also aid in flushing out the particulate and diesel emissions (stream 10). The mine ventilation system will not use any particulate scrubbers. Instead, a sufficiently large amount (~4 million ACFM) of air will be drawn in to keep the particulates and other gaseous emissions at an acceptable level.

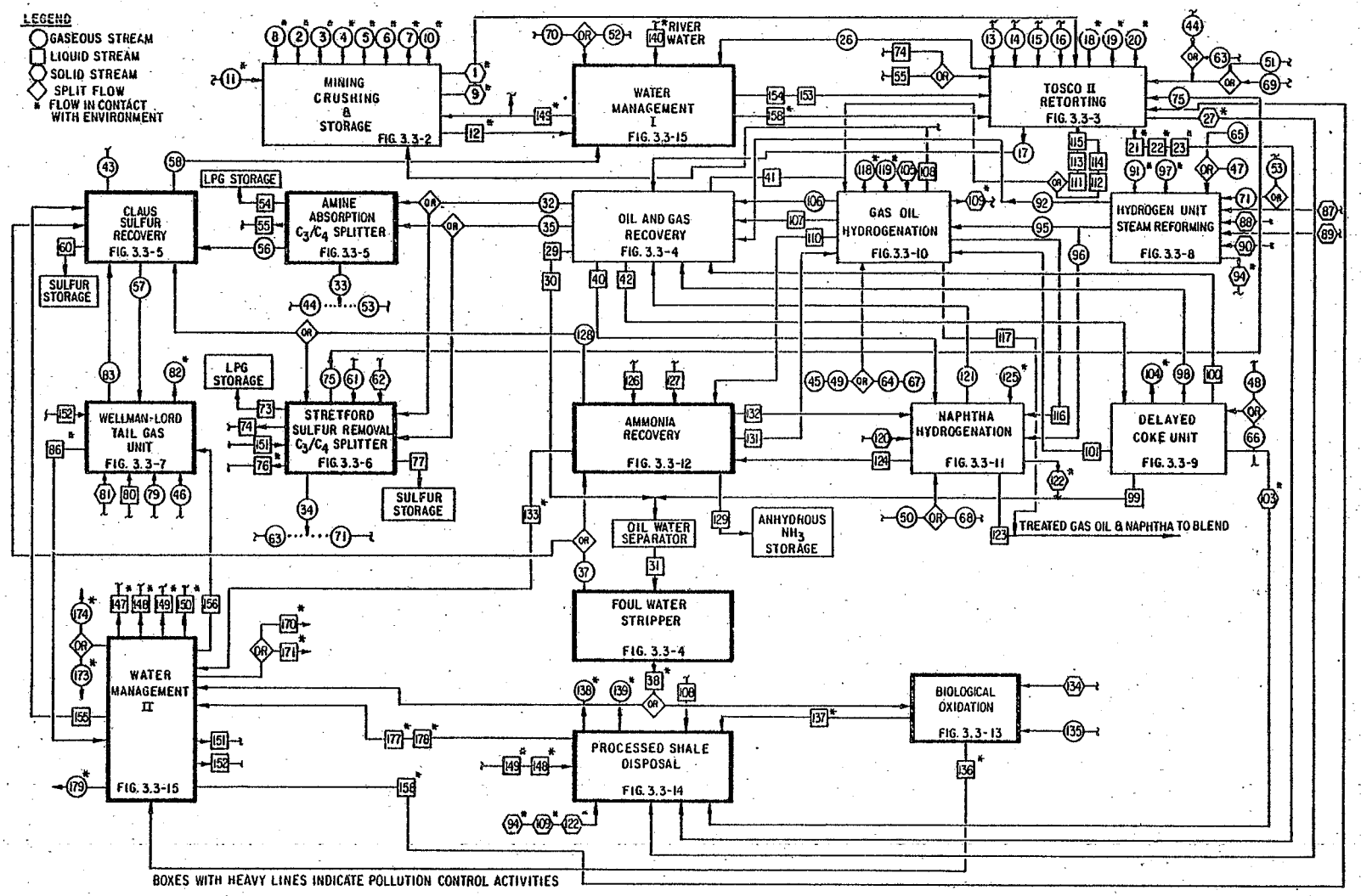

SOURCE: DRI based on Colony Development Operation, 1974, and U.S. DOI, 1977

NOTE: STEAM, STEAM CONDENSATE, AND COOLING WATER STREAMS HAVE BEEN DELETED FOR THE SAKE OF CLARITY.

FIGURE 3.3-1 OVERALL PLANT COMPLEX

A flow diagram for mining and crushing operations is illustrated in Figure 3.3-2. The run-of-mine shale from the dump trucks will be emptied into the top of the primary crusher, which is housed in a structure buried in the mine bench. The raw shale will be crushed to minus 8 inches in size and discharged onto the conveyor at the bottom of the crusher. The shale transfer and crushing operations within the primary crusher will produce particulates that will be controlled by baghouses and the treated gas, then emitted to the atmosphere (streams 2, 3 and 5).

Approximately 4,500 feet of enclosed conveyors will transport the crushed shale from the mine bench to the plant site--900 feet higher in elevation--for fine crushing. During a portion of the course, the conveyors will pass through a tunnel to minimize the distance, pitch, and angle of inclination of the conveyors. Transfer of shale between the conveyors will take place in a completely enclosed fashion, and the fugitive dusts will be controlled with foam sprays.

Under normal operation, the conveyors will carry the raw shale directly to the fine crushers; however, a raw shale stockpile of approximately 1,500,000 tons will be maintained on a plateau near the plant to assure continuous feed to the retorts should mining or conveying be interrupted. The airborne particulates from the stacking and reclaiming operations will be controlled with baghouses and foam sprays. Any particulates not controlled will be emitted in gaseous streams 4 and 8. Surface runoff and any leachate (stream 12) will be collected by a drainage system and redistributed, after oil/water separation, to the processed shale pile. The fine crushers will consist of multiple crushing, screening, and conveying systems, all enclosed in a single building. The raw shale will be reduced to minus one-half inch in size and conveyed to the fine ore storage silos. Particulate matter from the final crushing and storage operations will be controlled by baghouses, and any uncontrolled particulates will be emitted to the atmosphere (streams 6 and 7). The dust collected from all of the baghouses (stream 9) will be combined with the fine ore and fed to the retorts.

3.3.2 TOSCO II Aboveground Retorting Process

A full-sized TOSCO II pyrolysis unit consists of a raw shale preheat system, a ball heating and circulating system, a retorting system, and a processed shale cooling and moisturizing system. The commercial plant will consist of six identical pyrolysis units. Figure 3.3-3 shows a flow diagram for a single TOSCO II pyrolysis train (see Section 2 for a more detailed description of the pyrolysis unit). Fine crushed raw shale (stream 1) is fed through a surge hopper to a series of preheat lift pipes where hot flue gas from the ball heater also enters and pneumatically lifts the raw shale to a collecting bin at the top. During lifting, temperature of the raw shale is raised to about 500°F. Some hydrocarbons from the raw shale are consequently volatilized, and these are incinerated in a thermal oxidizer which is a part of the preheat system. Some entrained dust in the flue gas is separated by cyclones and added to the already settled raw shale in the collecting bin. Finally, the flue gas is wet scrubbed to remove the remainder of the particulates and emitted to the atmosphere (stream 18). The sludge from wet scrubbing (stream 21) is disposed of with the processed shale.

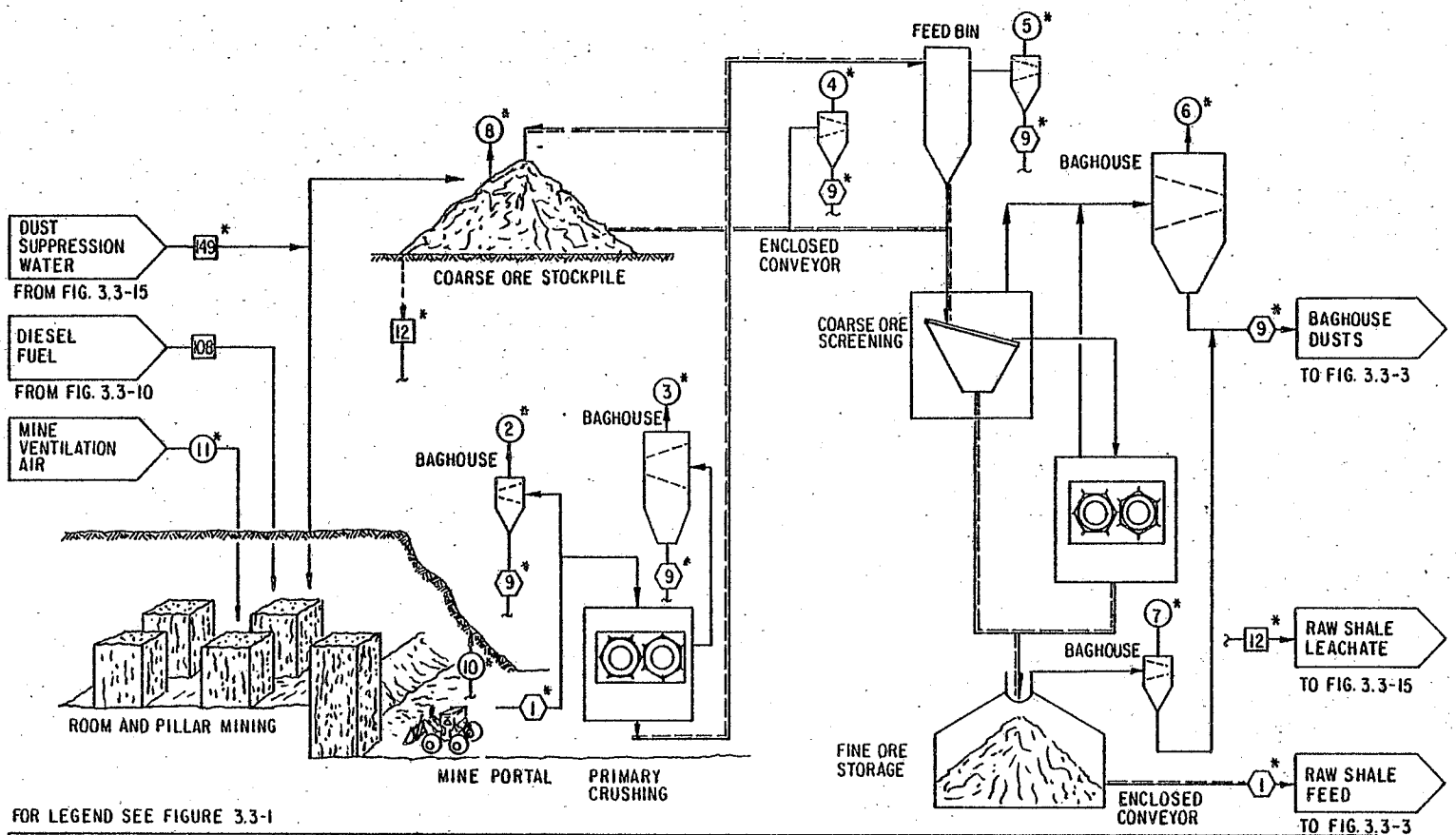

FOR LEGEND SEE FIGURE 3.3-1

STREAM NO.	1*	2*	3*	4*	5*	6*	7*	8*	9*	10*	11*	12*	108	149*
STREAM IDENTITY	RAW SHALE FEED	BAGHOUSE EMISSIONS: PORTAL TRANSFER POINT	PRIMARY CRUSHER	RECLAIM TUNNEL	TRANSFER TOWER FEED BIN	FINE CRUSHING & SCREEN	FINE ORE STORAGE	FUGITIVE DUST	BAGHOUSE DUSTS	MINE VENT EMISSION	MINE VENTILATION AIR	RAW SHALE LEACHATE	DIESEL FUEL	DUST SUPPR. WATER (MINING)
FLOW RATE: 10^3 ACFM		5.1	62.1	48.0	44.0	72.0	36.0			4000	4000			
10^3 lb/hr	5481.7	0.5 lb/hr	7.2 lb/hr	5.6 lb/hr	5.0 lb/hr	32.9 lb/hr	4.2 lb/hr	29.8 lb/hr	18.3				6	
gpm												N.D.		630
TEMP., °F	AMB →													→ AMB
PRESSURE, psig	AMB →													→ AMB

SOURCE: DRI based on Colony Development Operation, 1974

FIGURE 3.3-2 MINING AND CRUSHING

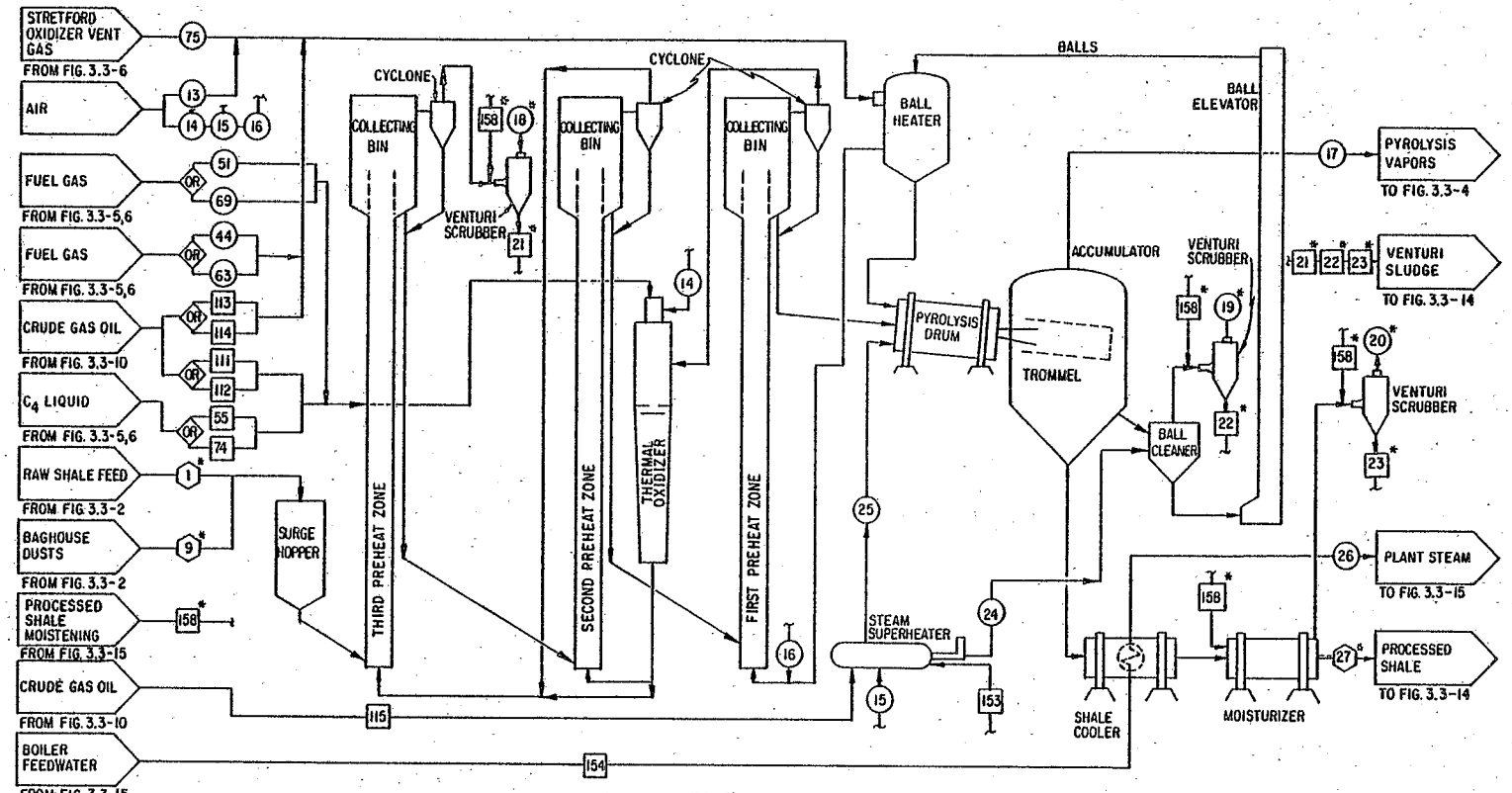

FOR LEGEND SEE FIGURE 3.3-1

STREAM NO.	1*	9*	13	14	15	16	17	18*	19*	20*	21*	22*	23*	24	25	26	27*	44	63	51	69	55	74	75	111	112	113	114	115	153	154	158*
STREAM IDENTITY	RAW SHALE FEED	BAG-HOUSE DUSTS	COMBUSTION AIR BALL. HTR.	OXID.	STEAM SUPHTR	QUENCH AIR	PYRLYS. VAPORS	VENTURI SCRUBBERS EMISSIONS			VENTURI SCRUBBERS SLUDGES			HOT FLUE GAS	STEAM (SUPER-HEATED)	PLANT STEAM	PROC. SHALE	FUEL GAS TO BALL HTR. (AMINE)	(STRET.)	FUEL GAS TO OXIDIZER (AMINE)	(STRET.)	C_4 FROM AMINE	FROM STRET.	STRET. OX. VENT	CRUDE GAS OIL TO OXIDIZER (AMINE)	(STRET.)	TO BALL HTR. (AMINE)	(STRET.)	TO STM. HTR.	BOILER FEED-WATER	PROC. SHALE MOIST.
FLOW RATE: 10^3 ACFM																																
10^3 lb/hr	548.7	18.3	502.0	648.4	131.3	N.D.	119.5	1272.0	265.8	266.4	143.4	10.8	7.2	138.4	150	45	517.0	23.1	59.8	N.D.	N.D.	26.8	26.8	N.D.	5.7	5.7	53.1	44.7	7.0	300/90	163.9
gpm																																
TEMP., °F	AMB	AMB	AMB	AMB	AMB	AMB	900	AMB	←				AMB	N.D.	N.D.	N.D.	200	105	95	105	95	105	95	N.D.	AMB	←						AMB
PRESSURE, psig	AMB	←											AMB	N.D.	N.D.	N.D.	AMB	150	150	150	150	150	150	AMB	←							AMB

SOURCE: DRI based on Colony Development Operation, 1974, and Whitcombe, et al., December 9, 1975

FIGURE 3.3-3 TOSCO II RETORTING

Preheated raw shale from the collecting bin is fed to the rotating drum retort along with hot ceramic balls. The temperature of the shale is raised to approximately 900°F and pyrolysis of the kerogen occurs. The pyrolysis vapors and the solids mixture are drawn into an accumulator vessel which separates the processed shale and the balls by screening through a trommel. Pyrolysis vapors (stream 17) are withdrawn from the top of the vessel and sent to a fractionator for product recovery. The ceramic balls are dedusted using flue gas from the steam superheater. The flue gas is then wet scrubbed for dust removal and emitted to the atmosphere (stream 19). The sludge from wet scrubbing (stream 22) is disposed of with the processed shale. Dedusted balls are sent via a bucket elevator to the ball heater where they are reheated and recycled to the retort. The ball heater burns process fuels (streams 44 or 63, and 113 or 114) for direct heating of the balls, and thus generates a hot flue gas which, as mentioned earlier, is used in raw shale preheating. In addition, in Case Study C, the ball heater also receives Stretford oxidizer vent gas (stream 75) as supplemental combustion air.

Hot processed shale from the accumulator vessel is first cooled by heat transfer to the boiler feedwater, which raises steam (stream 26), and then moisturized to approximately 14% moisture content and sent for disposal (stream 27). The moisturizing process creates more steam, which then entrains some processed shale dust. This steam is wet scrubbed for dust removal and vented to the atmosphere (stream 20). The processed shale sludge (stream 23) from the scrubber is mixed with the bulk of the processed shale for disposal.

The steam superheater burns process fuel (stream 115) to heat the steam that is used for sealing purposes in the pyrolysis unit.

3.3.3 Oil and Gas Recovery Unit

Figure 3.3-4 shows the initial treatment for upgrading the crude pyrolysis vapors. First, the unit separates the products of pyrolysis; then, it fractionates the gaseous products, while sending the liquid products to appropriate processing units for upgrading.

Pyrolysis vapors (stream 17) from the retort are introduced to a fractionator column which divides the vapors into raw retort gas (stream 28), foul water (stream 29), naphtha oil (stream 40), gas oil (stream 41), and bottoms oil (stream 42) fractions. The gas oil is sent to the gas oil hydrogenation unit (see Section 3.3.9), while the bottoms oil is sent for delayed coking (see Section 3.3.8).

The raw retort gas composite from the pyrolysis, hydrotreating, and coking units is compressed and introduced to a reboiled absorber stripper. A mixture of naphtha oil fractions from the same units is also added. Compression of the retort gas knocks out some moisture (stream 30) which is mixed with the foul water from the pyrolysis fractionator. The C_2 and lighter compounds (stream 32) in the feed to the reboiled absorber are stripped and removed from the top, while heavier compounds dissolve in naphtha which exits from the bottom.

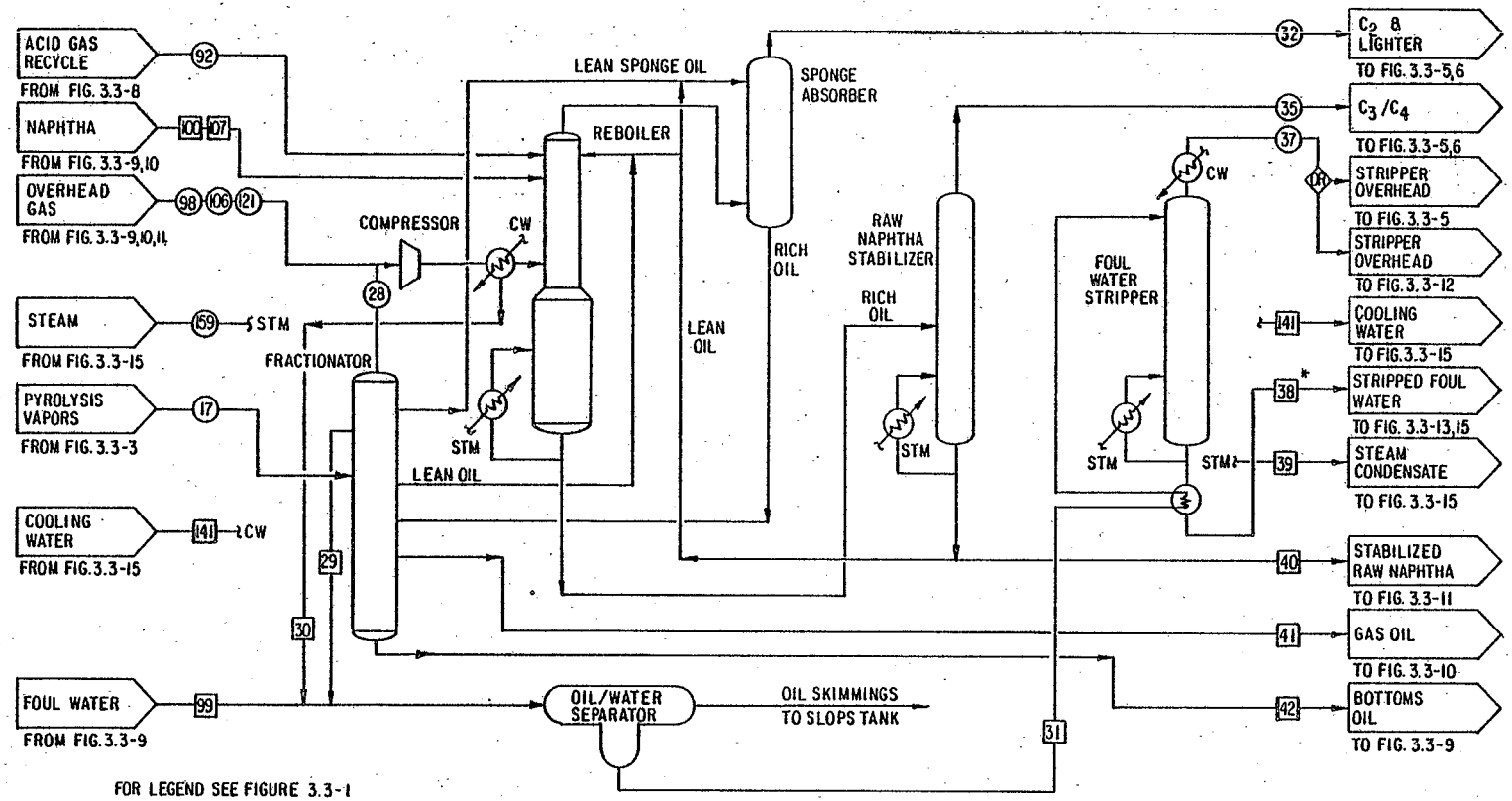

FOR LEGEND SEE FIGURE 3.3-1

STREAM NO.	17	28	29	30	31	32	35	37	38*	39	40	41	42	92	98	106	121	99	100	107	141	159
STREAM IDENTITY	PYROLYSIS VAPORS	RAW RETORT GAS	FOUL WATER (FROM FRACT.)	FOUL WATER (FROM COMP.)	FOUL WATER (TO STRIPPER)	C_2 & LIGHTER	C_3 & C_4	STRIPPER OVERHEAD	STRIPPED FOUL WATER	STEAM COND.	STAB. RAW NAPHTHA	GAS OIL	BOTTOMS OIL	ACID GAS RECYCLE	OVERHEAD GAS FROM COKER	OVERHEAD GAS FROM G.O. HYD.	OVERHEAD GAS FROM NAPHTHA HYD.	FOUL WATER (COKER)	NAPHTHA FROM COKER	NAPHTHA FROM G.O. HYD.	COOLING WATER	PLANT STEAM
FLOW RATE: 10^3 ACFM						6.7													(includes #107)	(included in #100		
10^3 lb/hr	1195	251.0	216.2		252.6	212.2	65.0	18.1	234.5	N.D.	106	450	189	N.D.	N.D.	N.D.	N.D.	36.4	90	N.D.		32.5
gpm			426	N.D.	498				468									72			1500	
TEMP., °F	900	N.D.	120	120	120	N.D.	N.D.	209	132	120	AMB	N.D.	N.D.	N.D.	N.D.	N.D.	N.D.	120	N.D.	N.D.	80	307
PRESS., psig	AMB	N.D.	AMB	AMB	AMB	N.D.	N.D.	3	AMB	AMB	AMB	AMB	AMB	N.D.	N.D.	N.D.	N.D.	AMB	N.D.	N.D.	AMB	60

SOURCE: DRI based on Colony Development Operation, 1974

FIGURE 3.3-4 OIL AND GAS RECOVERY AND FOUL WATER STRIPPING

Since the naphtha contains dissolved gases, it would need to be stabilized before further treatment. This is achieved by introducing the naphtha stream to a stabilizer column in which C_3/C_4 compounds (stream 35) in the naphtha are steam stripped. The stabilized naphtha is then sent to the naphtha oil hydrogenation unit (see Section 3.3.10). A portion of the stabilized naphtha is also used in a sponge oil absorber to remove traces of heavier compounds in the C_2 (and lighter) fraction; it is then returned to the pyrolysis fractionator.

Both C_2 (and lighter) and C_3/C_4 streams are treated for sulfur removal either by DEA/Claus/Wellman-Lord systems (Case Studies A and B) or by the Stretford process (Case Study C).

The foul water from the fractionator (stream 29), compression condensate from the gas recovery (stream 30), and a condensate from the delayed coker (stream 99) are combined (stream 31) and steam stripped to remove volatile matter (stream 37). The stripped water (stream 38) is either used directly in processed shale moisturizing (Case Studies A and C) or treated further (Case Study B) and then used in processed shale moisturizing. The overhead volatile gases from the steam stripper are sent to the Claus sulfur plant (see Section 3.3.4).

3.3.4 Amine Absorption/Claus Sulfur Recovery Units (Case Studies A and B)

The amine absorber/Claus system for retort gas treatment is shown in Figure 3.3-5. These technologies control the amount of hydrogen sulfide in the process gases; thus, they indirectly control the sulfur emissions from burning of the process fuels. The amine system removes H_2S from the gases and the Claus process, in turn, converts the H_2S to elemental sulfur.

The amine system includes two separate absorption columns which are used to treat two gas streams: the C_2 and lighter stream from the sponge oil absorber (stream 32) and the C_3/C_4 stream from the raw naphtha stabilizer (stream 35). These gas streams are scrubbed with a 30 weight percent DEA (diethanolamine) water solution to reduce H_2S to 130 ppmv concentration in the treated gas. The treated C_2 and lighter gas (stream 33) is used as plant fuel, while the C_3/C_4 stream (stream 36) is fractionated into LPG (stream 54) for sale and C_4 liquids (stream 55) for plant use. Approximately 50% of the COS is also removed, but the DEA solution does not remove any appreciable amount of mercaptans. The CO_2 in the gas streams is also reduced to a low level by absorption in the amine solution. The rich amine solution leaving the two absorption columns is combined and regenerated by steam stripping, which produces a concentrated acid gas stream from the top of the amine regenerator (stream 56). This concentrated acid gas stream is sent to the Claus sulfur recovery unit along with the overhead gas from the ammonia recovery process (stream 128).

In the Claus process, air is carefully introduced into the Claus feed stream to combust approximately one-third of the H_2S to SO_2, raising the gas stream temperature to approximately 1,200°F. This provides a stoichiometric amount of SO_2 to react with the H_2S. Elemental sulfur (stream 60) is produced by the reaction of H_2S with SO_2 in the feed incineration furnace and

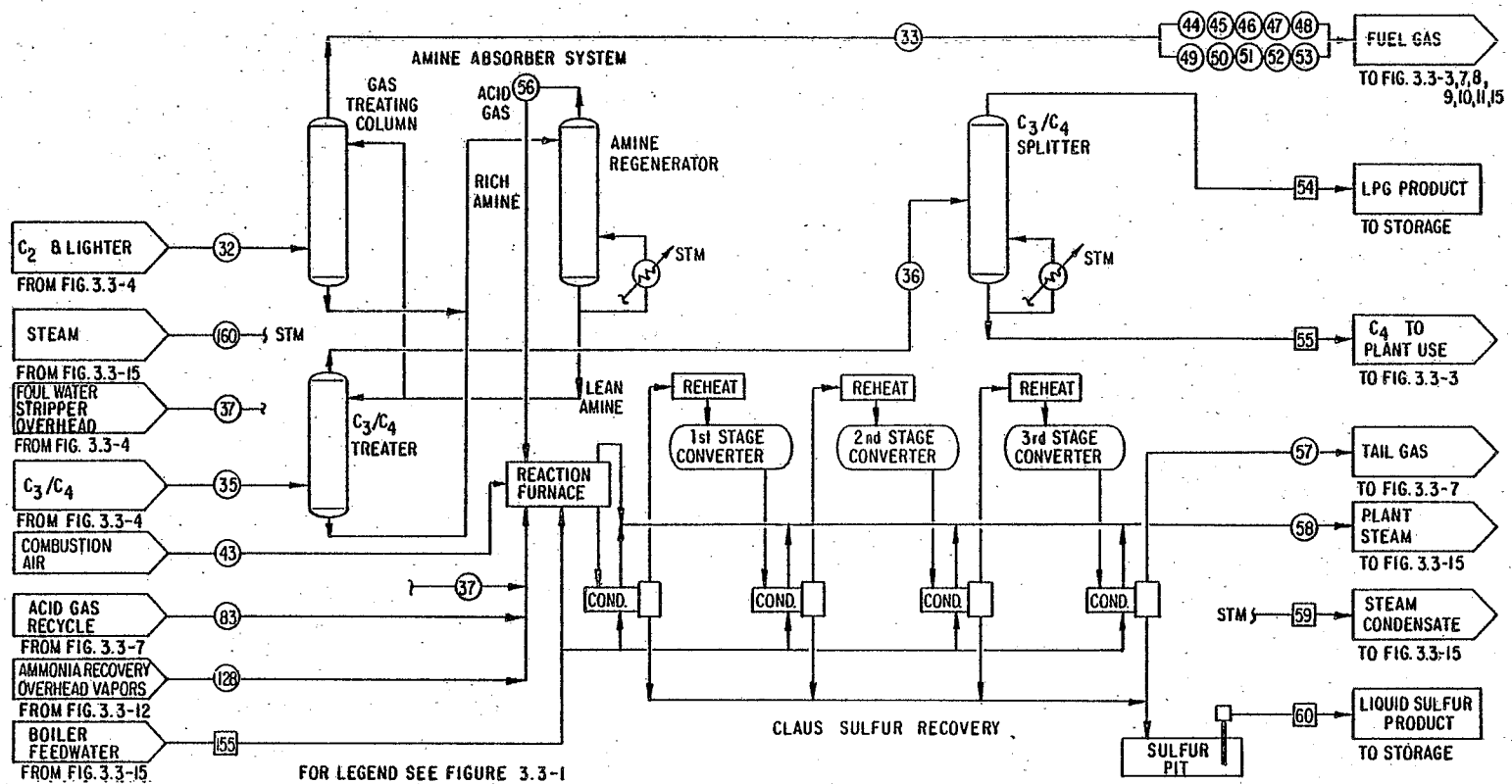

FOR LEGEND SEE FIGURE 3.3-1

STREAM NO.	32	33	35	36	37	43	44	45	46	47	48	49	50	51	52	53	54	55	56	57	58	59	60	83	128	155	160
STREAM IDENTITY	C_2 & LTR.	C_2& LTR. TREAT.	C_3/C_4	C_3/C_4 TREAT.	STRIPP. OVER-HEAD	COMB. AIR	FUEL GAS BALL HTR.	G.O. REBOIL.	WELL-LORD	REF. FURN.	COKER	G.O. HYD.	NAPH. HYD.	THERM. OXID.	BOILER	STEAM REF.	LPG PROD.	C_4 TO PLANT	ACID GAS	TAIL GAS	PLANT STEAM	STEAM COND.	LIQUID SULFUR PROD.	ACID GAS RECY.	AMMON. OVERHD VAPORS	BOILER FEED-WATER	PLANT STEAM
FLOW RATE: 10^3ACFM	6.7																		14.5	25.0		(includes # 84)					121 (incl. # 162)
10^3lb/hr	212.2	121.7	65.0	64.9	18.1	32.9	23.1	3.9	4.2	29.3	3.0	1.0	0.4	N.D.	9.8	40.3	37.5	26.8	90.8	117.4	38		16.5	1.7	8.6 (A,B)	76	
gpm																						242					
TEMP., °F	N.D.	105	N.D.	105	209	AMB	105	←								105	AMB	AMB	280	280	N.D.	100	260	110	210	AMB	360
PRESS., psig	N.D.	150	N.D.	150	3	AMB	150	←								150	N.D.	N.D.	5	5	N.D.	AMB	AMB	7	3	AMB	150

SOURCE: DRI based on Colony Development Operation, 1974

FIGURE 3.3-5 AMINE ABSORBER AND CLAUS SULFUR RECOVERY, CASE STUDIES A & B

in three catalyst (alumina or cobalt-moly) stages downstream of the furnace. Intermediate condensers after the furnace and each catalyst bed recover elemental sulfur and generate 60 psi steam (from cooling water) to be used elsewhere in the plant.

The rate at which air is introduced into the Claus unit is controlled to maintain a small excess amount of H_2S in the gas stream. After the third catalyst bed, the hot tail gas (stream 57), still containing a small amount of H_2S, is sent to a Wellman-Lord tail gas treating process (see Section 3.3.6). The H_2S is recovered from the tail gas by the Wellman-Lord process, converted to SO_2, and returned to the Claus plant.

3.3.5 Stretford Sulfur Process (Case Study C)

A flow diagram for the Stretford process is shown in Figure 3.3-6. This process affords simultaneous removal and recovery of hydrogen sulfide from the gaseous feeds.

The Stretford process includes two separate absorbers, one each for C_2 and lighter gases (stream 32) and C_3/C_4 gases (stream 35), with a single solution regeneration and sulfur recovery system. The Stretford solution consists of a buffered solution of sodium carbonates, anthraquinone disulfonic acid (ADA), and sodium vanadate which, in effect, oxidize H_2S to elemental sulfur. The reactants are regenerated by stripping and oxidizing with air, then are recycled.

The gas streams are introduced into the absorbers through venturi inlets under the solution level. By reacting with vanadate in the presence of ADA, H_2S is converted to elemental sulfur which then floats to the surface and is skimmed off in the oxidizer. After filtering and melting, the sulfur product (stream 77) is taken to storage. The treated C_2 and lighter gases (stream 34) are used as process gas, while C_3/C_4 gases (stream 72) are fractionated into LPG and C_4 liquids (streams 73 and 74).

Stripping air is purged through the Stretford solution in the oxidizer tank to regenerate the ADA. The oxidizer vent gas, containing the stripping air with some desorbed materials (stream 75), is then used as a combustion air source for the ball heater. The regenerated solution is recycled to the absorbers. Some nonregenerable compounds like thiosulfates form during the solution regeneration. These are removed periodically as part of the spent liquor (stream 76), which is sent for reclaim or disposal.

The Stretford process selectively removes H_2S, but it does not remove other sulfur compounds such as COS, RSH and CS_2. Some of these compounds are partially absorbed in the solution but are desorbed again during stripping. Unlike amine absorption, which also removes 99% of CO_2 from the gas, the Stretford process does not appreciably remove CO_2; therefore, the heating value of the Stretford treated process gas is considerably lower than that of the amine treated gas.

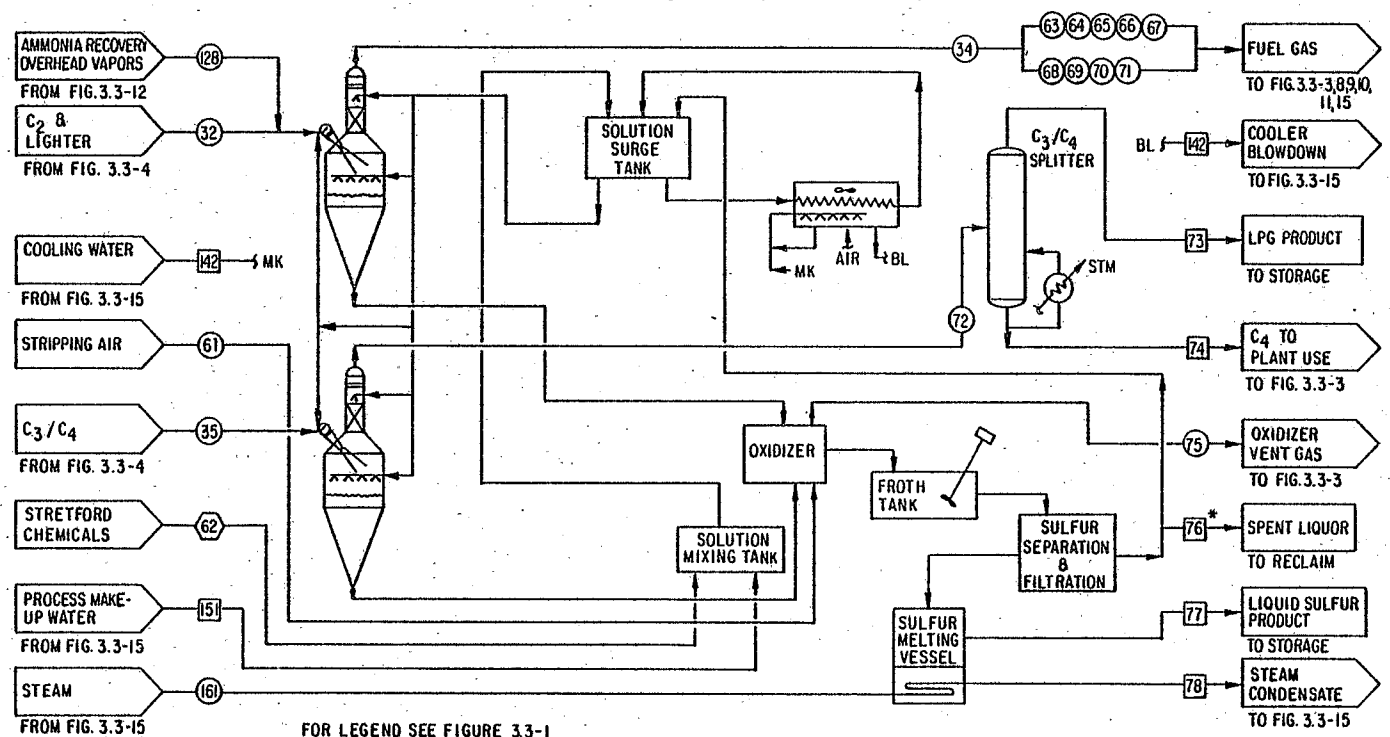

FOR LEGEND SEE FIGURE 3.3-1

STREAM NO.	32	34	35	61	62	63	64	65	66	67	68	69	70	71	72	73	74	75	76*	77	78	128	142	151	161
STREAM IDENTITY	C_2 & LTR.	C_2 & LTR. TREATED	C_3/C_4	STRIPP. AIR	STRET. CHEM.	← FUEL GAS FOR IN-PLANT USAGE →									SULFUR FREE C_3/C_4	LPG PROD.	C_4 TO PLANT	OX. VENT GAS	SPENT LIQUOR	LIQUID SULFUR	STEAM COND.	AMMONIA OVER-HEAD	COOL. WATER	PROC. MK. WATER	PLANT STEAM
						BALL HTR.	G.O. REBOIL.	REF. FURN.	COKER	G.O. HYD.	NAPH. HYD.	THERM. OXID.	BOILER	STEAM REF.											
FLOW RATE: 10^3ACFM	6.7			N.D.																					
10^3lb/hr	212.2	196.1	65.0		0.67	59.8	6.4	47.1	4.9	1.6	0.7	N.D.	10.7	64.5	64.9	37.5	26.8	N.D.	N.D.	17.0		10.6			
gpm																					38	(C)	116	65	19
TEMP., °F	N.D.	95	N.D.	AMB	AMB	95	95	95	95	95	95	95	95	95	95	AMB	AMB	N.D.	N.D.	260	120	210	AMB	AMB	460
PRESS., psig	N.D.	150	N.D.	AMB	AMB	150	150	150	150	150	150	150	150	150	150	N.D.	N.D.	AMB	AMB	AMB	AMB	3	AMB	AMB	460

SOURCE: DRI based on Peabody Process Systems, Inc., February 1981

FIGURE 3.3-6 STRETFORD SULFUR RECOVERY, CASE STUDY C

3.3.6 Wellman-Lord Tail Gas Process (Case Studies A and B)

A schematic for the Wellman-Lord process is presented in Figure 3.3-7. This process controls the sulfur emissions from the Claus unit by recovering H_2S from the Claus tail gas, converting it to SO_2, and then recycling it back to the Claus unit.

The Claus tail gas (stream 57) is introduced into an incinerator along with process fuel (stream 46) and combustion air (stream 79). Sulfur compounds in the feed streams are converted to SO_2 upon incineration. Hot combustion products are cooled, at first by waste heat recovery and then by quenching with water. Any sulfur trioxide produced during the feed incineration is condensed along with the moisture in the combustion products, forming sulfuric acid. The acidic condensate is removed from the bottom of the quench tower, neutralized with alkali, and then sent for disposal (stream 86).

The cooled gaseous stream is then introduced into the SO_2 absorption tower which circulates a solution of sodium sulfite, Na_2SO_3. The SO_2 in the gas is absorbed in the sulfite solution, producing sodium bisulfite, $NaHSO_3$. The resulting rich solution is removed from the bottom and sent to the evaporator for regeneration. A clean tail gas (stream 82), practically free from any SO_2, emerges from the top of the SO_2 absorber and is emitted to atmosphere without further treatment.

In the evaporator, the $NaHSO_3$ solution is indirectly heated with steam, whereby SO_2 desorbs and Na_2SO_3 reforms. Water vapors in the evaporator overhead are condensed, while the gas containing SO_2 (stream 83) is recycled to the Claus unit. The Na_2SO_3 slurry is withdrawn from the bottom of the evaporator into a dissolving tank. The evaporator overhead condensate, makeup chemicals, and makeup water are also added to the dissolving tank to reconstitute the Na_2SO_3 solution, which is then returned to the absorber.

3.3.7 Hydrogen Unit

Hydrogen is used in naphtha oil and gas oil hydrotreaters for oil upgrading. The hydrogen is produced from a portion of the treated C_2 and lighter process gas (stream 53 or 71) by using a conventional steam reforming process, as depicted in Figure 3.3-8. The catalysts used in reforming are vulnerable to poisoning by sulfur compounds; therefore, only the treated process gas is used.

The hydrogen unit consists of a hot, cobalt-molybdenum catalyst guard bed to convert most residual sulfur compounds in the process gas to H_2S, which is then absorbed in an amine solution, regenerated (stream 92), and sent to the Claus (or Stretford) unit. Any remaining H_2S in the process gas is removed by passing through a zinc oxide bed.

The desulfurized gas is then mixed with superheated steam and reformed over a nickel-based catalyst at 1,400° to 1,600°F to produce a mixture of hydrogen, carbon dioxide, carbon monoxide and unreacted steam. The latter two compounds are then reacted over a high temperature, iron-chromium oxide

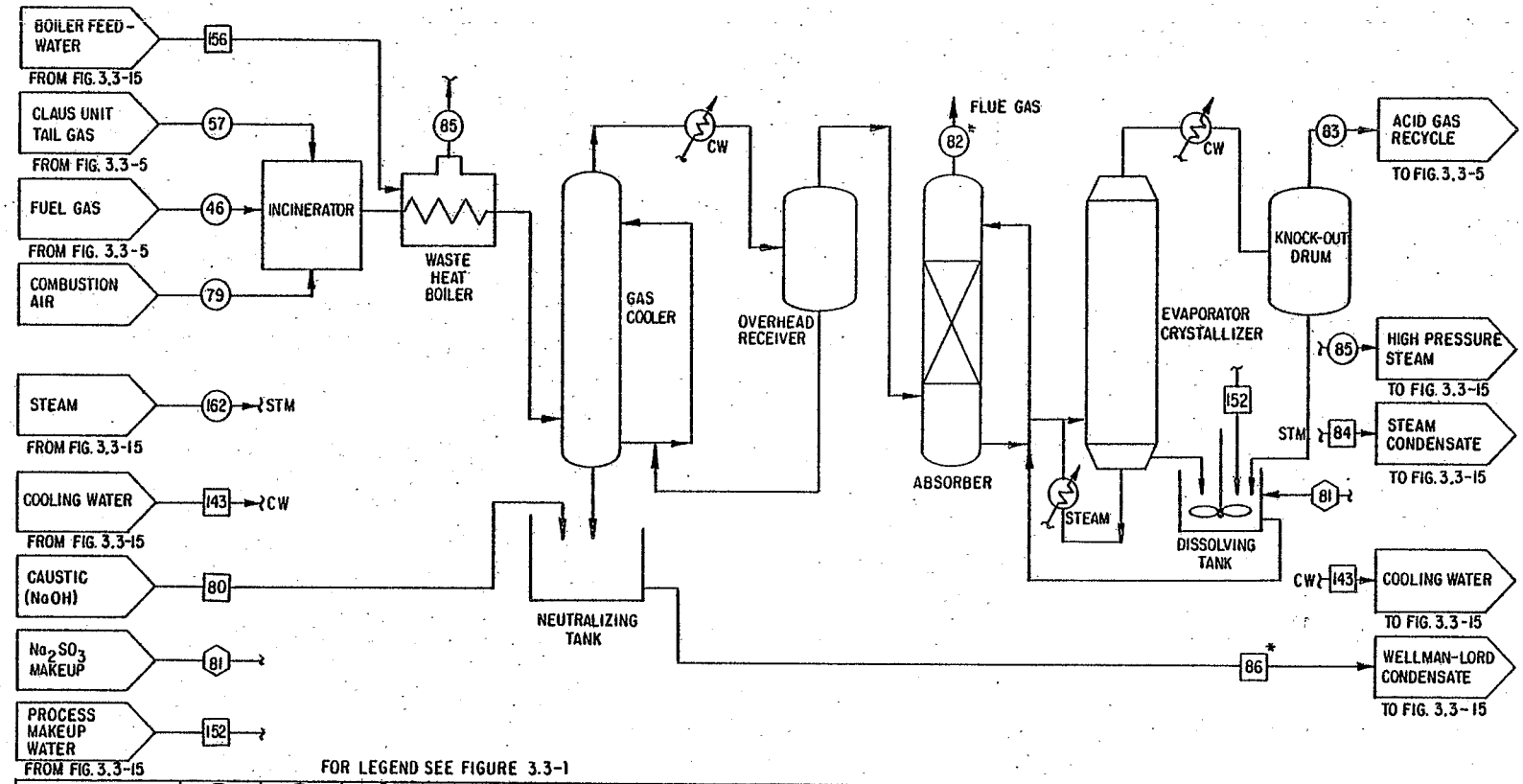

FOR LEGEND SEE FIGURE 3.3-1

STREAM NO.	46	57	79	80	81	82*	83	84	85	86*	143	152	156	162
STREAM IDENTITY	FUEL GAS	CLAUS TAIL GAS	COMBUSTION AIR	CAUSTIC (NaOH)	Na_2SO_3 MAKEUP	FLUE GAS	ACID GAS RECYCLE	STEAM COND.	H. P. STEAM	WELLMAN-LORD CONDENSATE	COOLING WATER	PROCESS MAKEUP WATER	BOILER FEEDWATER	PLANT STEAM
FLOW RATE: 10^3 ACFM		25.0												
10^3 lb/hr	4.2	117.4	85.9	N.D.	1.7	204.0	1.7	(included in #59) N.D.	N.D.	22.1			N.D.	N.D. (included in #160)
gpm										44	5760	2		
TEMP., °F	AMB	280	AMB	AMB	AMB	N.D.	280	120	460	N.D.	AMB	AMB	AMB	360
PRESSURE, psig	190	5	AMB	AMB	AMB	AMB	5	N.D.	460	AMB	AMB	AMB	AMB	150

SOURCE: DRI based on U.S. DOI, 1977

FIGURE 3.3-7 WELLMAN-LORD PROCESS, CASE STUDIES A & B

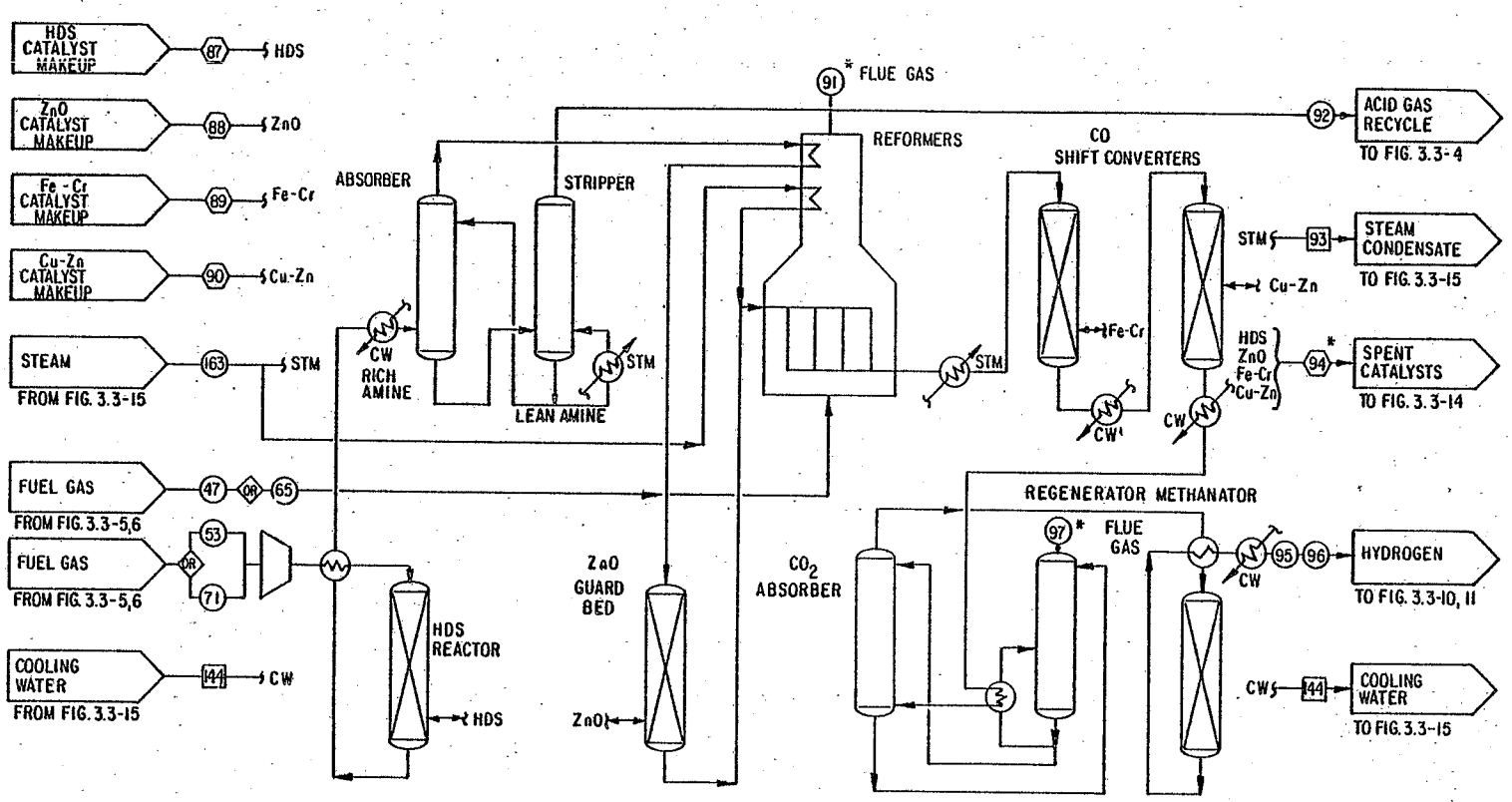

FOR LEGEND SEE FIGURE 3.3-1

STREAM NO.	47	65	53	71	87	88	89	90	91*	92	93	94*	95	96	97*	144	163
STREAM IDENTITY	FUEL GAS TO REF. FURNACE		FUEL GAS TO REFORMERS		HDS CATALYST MAKEUP	ZnO CATALYST MAKEUP	Fe-Cr CATALYST MAKEUP	Cu-Zn CATALYST MAKEUP	FLUE GAS (REF.)	ACID GAS RECYCLE	STEAM COND.	SPENT CATALYST	HYDROGEN TO G.O. HYD.	HYDROGEN TO NAPH. HYD.	FLUE GAS (REGEN.)	COOLING WATER	PLANT STEAM
	AMINE	STRET.	AMINE	STRET.													
FLOW RATE: 10^3 ACFM, 10^3 lb/hr, gpm	29.3	47.1	40.3	64.5	7.7 lb/hr	1.6 lb/hr	2.3 lb/hr	3.7 lb/hr	666.6 (A,B) 685.3(C)	N.D.	N.D.	15.3 lb/hr	N.D.	N.D.	242	N.D.	224
TEMP., °F	105	105	105	105	AMB	AMB	AMB	AMB	N.D.	N.D.	120	AMB	N.D.	N.D.	N.D.	AMB	460
PRESSURE, psig	N.D.	N.D.	N.D.	N.D.	AMB	AMB	AMB	AMB	AMB	N.D.	AMB	AMB	N.D.	N.D.	AMB	AMB	460

SOURCE: DRI based on Colony Development Operation, 1974

FIGURE 3.3-8 HYDROGEN UNIT

shift catalyst and a low temperature, copper-zinc oxide shift catalyst to produce more hydrogen and carbon dioxide. The carbon dioxide is removed by absorption in an amine solution and emitted to the atmosphere after amine regeneration. This emission (stream 97) also contains a large amount of steam which is produced during the regeneration process.

Finally, the hydrogen overhead from the amine absorber is passed through a nickel-based methanator to convert any residual carbon monoxide and carbon dioxide to methane by reaction with hydrogen. The treated hydrogen product is then split into a feed going to the gas oil hydrotreater (stream 95) and another going to the naphtha oil hydrotreater (stream 96).

The reforming furnaces burn process gas (stream 47 or 65) which generates a flue gas emission (stream 91) to the atmosphere. Several spent catalysts (stream 94) are also produced, and these are removed as required.

3.3.8 Delayed Coker

The residuum or bottoms oil (stream 42) from the pyrolysis fractionator has a high boiling point (~950°F) and contains asphaltene material. Since this oil has a low market value, it is upgraded into more useful lighter products by thermal cracking. Figure 3.3-9 presents a flow diagram for the delayed coker unit.

The bottoms oil is heated and charged to the bottom of a coker fractionator in which the lighter components are flashed off and fractionated. The oil is further heated to cracking temperatures and fed to an insulated coke drum where cracking of the oil occurs. Hot vapors containing gas, naphtha oil, and gas oil are produced, and coke is formed. The vapors are fed to the fractionator where they are separated into their respective products (streams 98, 100, and 101) and sent to appropriate upgrading units.

Once a coke drum is filled, the feed is diverted to another coke drum. Steam stripping of the coke is then carried out to remove volatile components. The coke is cooled by injecting water, removed from the drum by cutting with high pressure water jets, and then sent for disposal (stream 103). The steam used for stripping condenses overhead of the fractionator and forms a foul water (stream 99) which is separated from the condensed oil and sent to the foul water stripper.

The coker feed furnace combusts the process gas (stream 48 or 66), resulting in a flue gas (stream 104) that is emitted to the atmosphere.

3.3.9 Gas Oil Hydrotreater

This unit upgrades the crude gas oil fractions, obtained from the pyrolysis unit (stream 41) and the delayed coker (stream 101), into a low sulfur, low nitrogen gas oil. The oil viscosity and pour point are also decreased to facilitate better handling. A flow diagram for gas oil hydrogenation is presented in Figure 3.3-10.

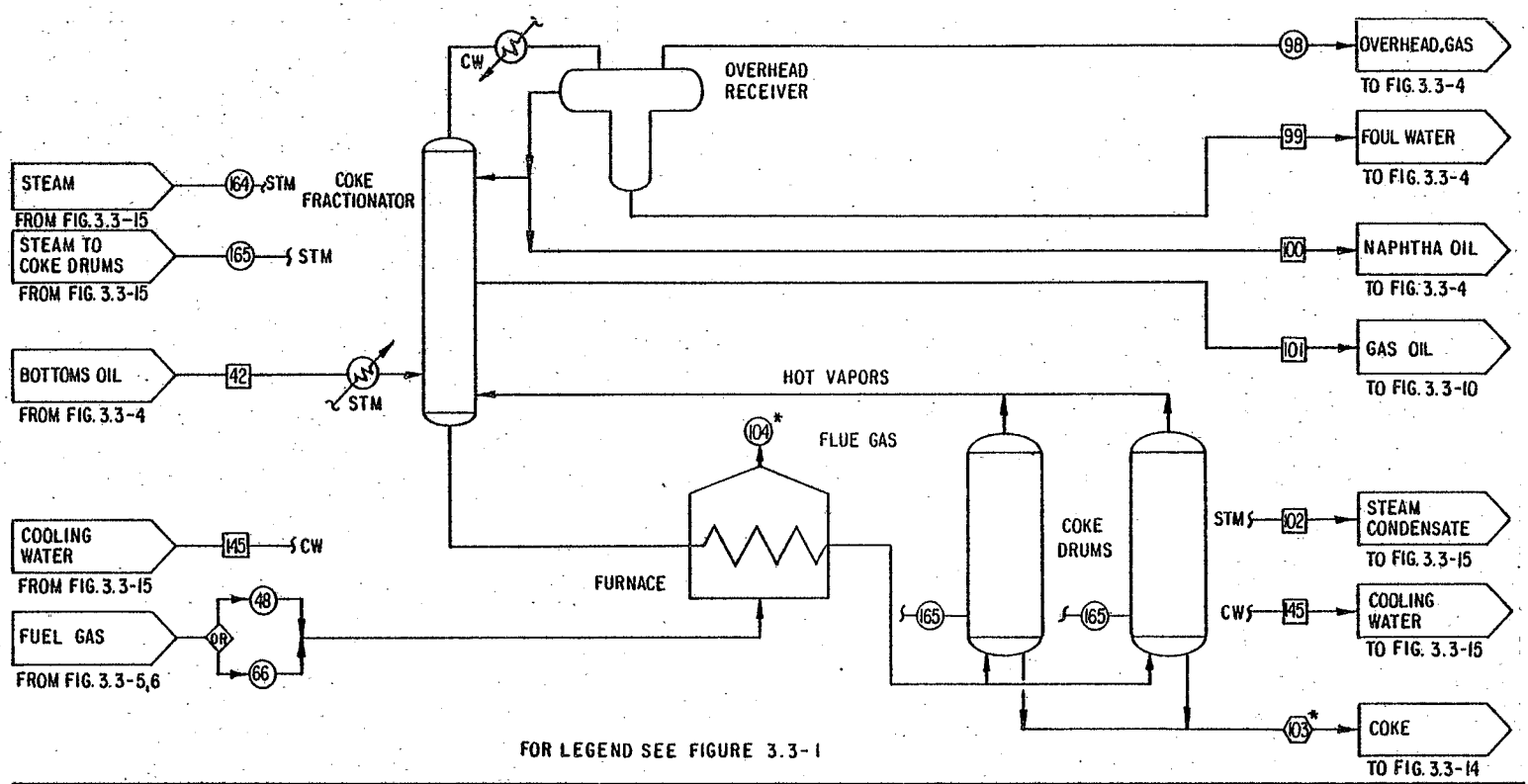

FOR LEGEND SEE FIGURE 3.3-1

STREAM NO.	42	48	66	98	99	100	101	102	103*	104*	145	164	165
STREAM IDENTITY	BOTTOMS OIL	FUEL GAS FROM AMINE	FUEL GAS FROM STRET.	OVERHEAD GAS	FOUL WATER	NAPHTHA OIL	GAS OIL	STEAM COND.	COKE	FLUE GAS	COOLING WATER	PLANT STEAM	STEAM TO COKE DRUMS
FLOW RATE: 10^3 ACFM						(includes # 107)							
10^3 lb/hr	189	3.0	4.9	N.D.	36.4	90	N.D.	N.D.	66.7	68.8(A,B) 70.9(C)	N.D.	N.D.	36
gpm					72								
TEMP., °F	N.D.	105	105	N.D.	120	N.D.	N.D.	120	N.D.	N.D.	AMB	460	460
PRESS., psig	AMB	N.D.	N.D.	N.D.	AMB	N.D.	AMB	AMB	AMB	AMB	AMB	460	460

SOURCE: DRI based on Colony Development Operation, 1974

FIGURE 3.3-9 DELAYED COKING

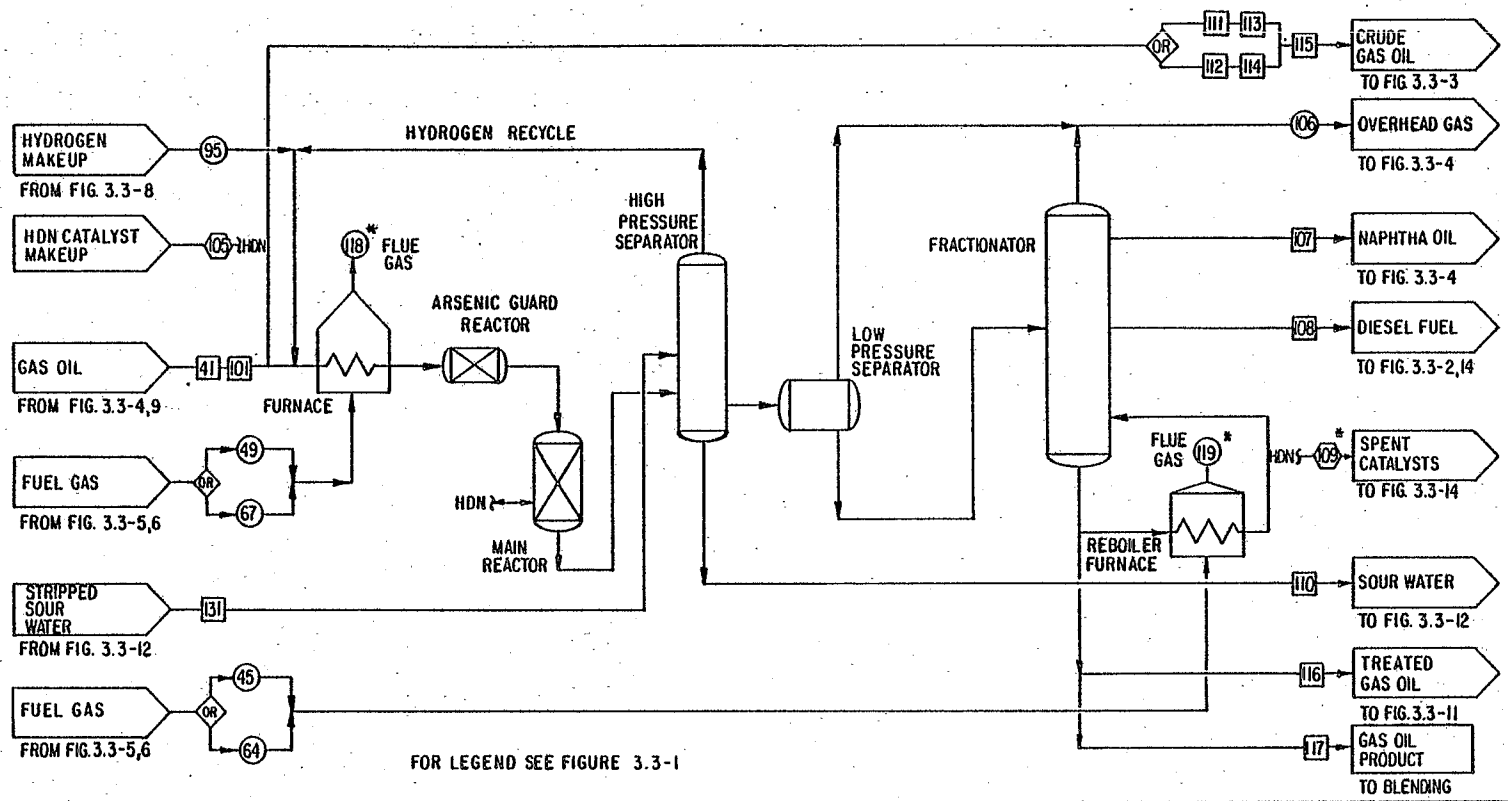

STREAM NO.	41	101	45	64	49	67	95	105	106	107	108	109*	110	111	112	113	114	115	116	117	118*	119*	131
STREAM IDENTITY	GAS OIL FROM FRACT.	GAS OIL FROM COKER	FUEL GAS FROM AMINE	FUEL GAS FROM STRET.	FUEL GAS FROM AMINE	FUEL GAS FROM STRET.	HYDROG. MAKEUP	HDN CATALYST MAKEUP	OVER-HEAD GAS	NAPHTHA OIL	DIESEL FUEL	SPENT CATALYST	SOUR WATER	CRUDE GAS OIL TO THERMAL (A,B)	CRUDE GAS OIL TO OXIDIZ. (C)	CRUDE GAS OIL TO BALL (A,B)	CRUDE GAS OIL TO HEATER (C)	CRUDE GAS OIL TO STEAM HTR.	TREATED GAS OIL TO NAPHTH. HYDROTR	TREATED GAS OIL TO BLEND.	FLUE GAS FURNACE	FLUE GAS RE-BOILER	STRIPP. SOUR WATER
FLOW RATE: 10^3 ACFM																					22.3 (A,B) 23.0(C)	90.0 (A,B) 92.6(C)	(includes #132)
10^3 lb/hr	450	N.D.	3.9	6.4	1.0	1.6	N.D.	0-30 lb/hr	N.D.	(included in #100) N.D.	6	0-30 lb/hr	(includes #124) 510	5.7	5.7	53.1	44.7	7.0	N.D.	336			
gpm																							485
TEMP., °F	N.D.	N.D.	105	105	105	105	AMB	AMB	N.D.	N.D.	N.D.	AMB	N.D.	AMB	AMB	AMB	AMB	AMB	N.D.	N.D.	N.D.	N.D.	180
PRESS., psig	AMB	AMB	N.D.	N.D.	N.D.	N.D.	N.D.	AMB	N.D.	N.D.	N.D.	AMB	N.D.	AMB								AMB	6

SOURCE: DRI based on Colony Development Operation, 1974

FIGURE 3.3-10 GAS OIL HYDROGENATION

The mixed gas oils and hydrogen (stream 95) from the hydrogen unit are blended together and heated to reaction temperatures in two parallel reaction furnaces. The preheated blend is then passed through a hydrodenitrogenation (HDN) catalyst at a high temperature and pressure. The oil is hydrogenated, and organically bound nitrogen and sulfur are reduced to ammonia and hydrogen sulfide during this reaction.

The hydrotreated mixture is then fed to a high pressure separator to which wash water (stream 131) is also added. Any unreacted hydrogen overhead from the separator is recycled back to be blended with the fresh gas oil feed, while most of the ammonia and some hydrogen sulfide dissolve in the wash water to form a sour water (stream 110). This sour water is removed from the bottom of the separator and sent to the ammonia plant for recovery of ammonia. The oil is also removed from the bottom and sent to a low pressure separator.

Dissolved gases in the oil are flashed in the low pressure separator and sent to the gas recovery unit. The oil is then further fractionated into overhead gas (stream 106), naphtha oil (stream 107), diesel oil (stream 108), and hydrotreated gas oil (stream 117). The overhead gas and naphtha are sent to the gas recovery unit, diesel is used as fuel for mining equipment, and the gas oil is blended with hydrotreated naphtha to yield the final upgraded product.

The reaction feed furnaces and fractionator reboiler furnace use process gas (streams 49 or 67, and 45 or 64, respectively) as fuel. The flue gases (streams 118 and 119) from these furnaces are emitted to the atmosphere.

3.3.10 Naphtha Oil Hydrotreater

In this unit, stabilized naphtha oil from the gas recovery unit is hydrotreated to produce a low sulfur, low nitrogen naphtha oil which is blended with the hydrotreated gas oil to produce the final upgraded fuel oil product. A flow diagram for the naphtha oil hydrotreater is shown in Figure 3.3-11.

The operation of this unit is quite similar to that of the gas oil hydrogenation unit. Stabilized naphtha (stream 40) from the gas recovery unit is mixed with the hydrogen (stream 96) feed from steam reforming and heated to reaction temperature. The preheated mixture is then passed through a bed of HDN catalyst at an elevated temperature and pressure. During this reaction, the unsaturated hydrocarbons in the oil are hydrogenated, and essentially all of the organic nitrogen and sulfur are reduced to form ammonia and hydrogen sulfide.

The excess hydrogen is flashed off in a low pressure separator and recycled to the front of the unit; at the same time, wash water (stream 132) is added to absorb ammonia and hydrogen sulfide. The sour water thus formed (stream 124) is removed from the bottom and sent to the ammonia plant for recovery of ammonia.

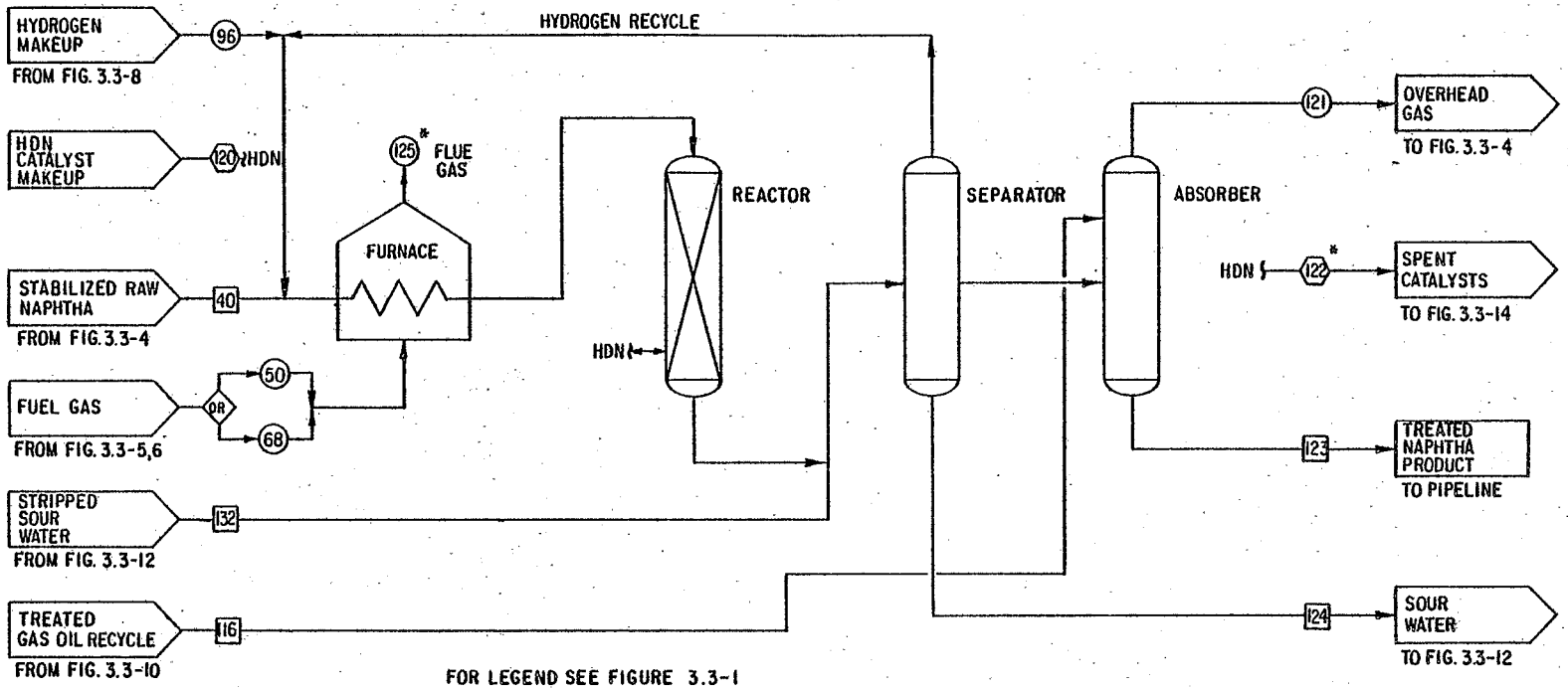

FOR LEGEND SEE FIGURE 3.3-1

STREAM NO.	40	50	68	96	116	120	121	122*	123	124	125*	132
STREAM IDENTITY	STABIL-IZED NAPHTHA	FUEL GAS FROM AMINE	FUEL GAS FROM STRET.	HYDRO-GEN MAKEUP	TREATED GAS OIL RECYCLE	HDN CATALYST MAKEUP	OVER-HEAD GAS	SPENT CATALYST	TREATED NAPHTHA	SOUR WATER	FLUE GAS	STRIPPED SOUR WATER
FLOW RATE: 10^3 ACFM 10^3 lb/hr gpm	106	0.4	0.7	N.D.	N.D.	0-17.1 lb/hr	N.D.	0-17.1 lb/hr	230	(included in #110) N.D.	(A,B) 10.0 10.3 (C)	(included in #131) N.D.
TEMP., °F	AMB	105	95	AMB	AMB	AMB	N.D.	N.D.	N.D.	N.D.	AMB	180
PRESSURE, psig	AMB	150	150	N.D.	AMB	AMB	N.D.	AMB	AMB	AMB	AMB	6

SOURCE: DRI based on Colony Development Operation, 1974

FIGURE 3.3-11 NAPHTHA HYDROGENATION

The washed naphtha from the separator is introduced to an absorber vessel in which more gases are flashed off (stream 121). A small stream of hydrotreated gas oil is added through the top of the absorber to scrub out heavier components in the gas. The hydrotreated naphtha exits from the bottom of the absorber and is blended with the bulk of hydrotreated gas oil to form the upgraded syncrude product.

The naphtha feed reaction furnace is fueled by the process gas (stream 50 or 68), resulting in a flue gas (stream 125) that is released to the atmosphere. Spent catalysts (stream 122) are also removed periodically.

3.3.11 Ammonia Recovery Process

A schematic flow diagram for an ammonia recovery process is presented in Figure 3.3-12. This unit treats combined ammoniacal sour water (streams 110 and 124) from the two hydrotreating units for recovery of anhydrous ammonia. In addition, in Case Study C, it receives the foul water stripper overheads (stream 37).

The ammonia recovery process illustrated consists of a water stripper, an ammonia absorber, an ammonia stripper, and an ammonia concentrator or boiler. The sour water feed is introduced to the water stripper in which the dissolved ammonia and other volatile matter are evolved by steam stripping the sour water. The stripped water (streams 131 and 132), for the most part, is returned back to the hydrotreaters as wash water. A small purge stream of the stripped water is used in processed shale moisturizing (stream 133).

In the ammonia absorber, the released ammoniacal gases and foul water stripper overhead (stream 37) are absorbed out of the vapor phase in a phosphoric acid solution. A solution stoichiometry between monoammonium phosphate and diammonium phosphate is maintained for efficient absorption of ammonia. Unabsorbed gases such as H_2S and CO_2 continue on, as the ammonia recovery unit overhead vapors (stream 128), to the Claus (or Stretford) unit for recovery of sulfur.

Desorption of the ammonia from the ammonium phosphate solution takes place in the ammonia stripper section. Both temperature and pressure are raised and steam is passed through the solution. An aqueous solution of 10-20% ammonia is condensed overhead, while the stripped or lean solution is recycled to the absorption section. Ammonia is then obtained in an anhydrous state (stream 129) in the distillation section by steam stripping the aqueous ammonia solution and fractionating the vapors. Sodium hydroxide may be added to the aqueous charge to facilitate release of dissolved ammonia.

3.3.12 Biological Oxidation (Case Study B)

Additional treatment of the foul water after initial steam stripping is provided to reduce the residual organic content of the process wastewater. In general, stripped oil shale wastewaters will retain much of the foul odor resulting from anaerobic decomposition of the organics, and oxidation of the odor contributing compounds serves to negate the problem. A properly designed biological oxidation system can remove up to 90% of the

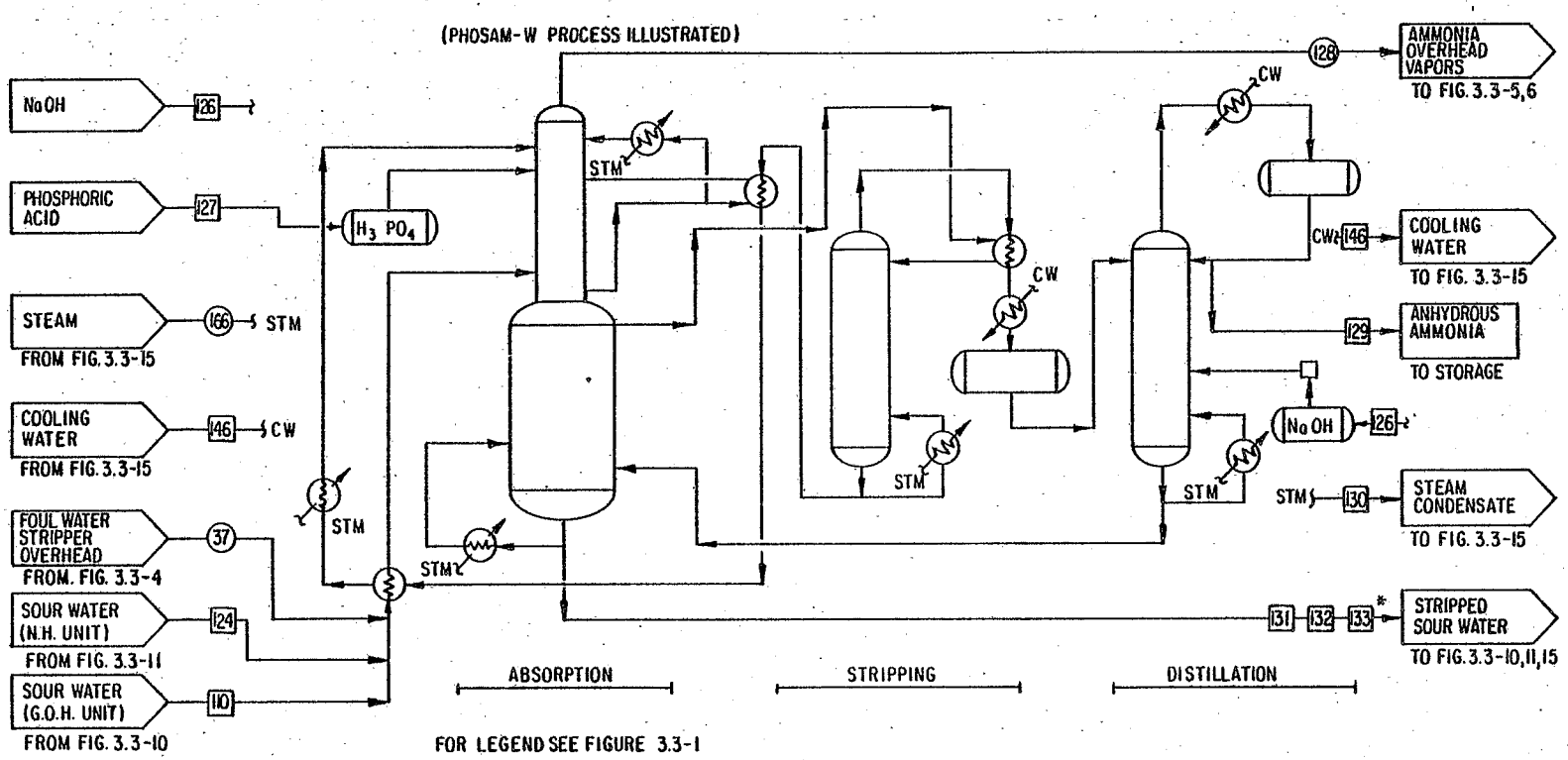

FOR LEGEND SEE FIGURE 3.3-1

STREAM NO.	37	110	124	126	127	128	129	130	131	132	133*	146	166
STREAM IDENTITY	FOUL WATER STRIPPER OVERHEAD	SOUR WATER G.O.H.	SOUR WATER N.H.	NaOH	PHOSPHORIC ACID	AMMONIA OVERHEAD VAPORS	ANHYDROUS AMMONIA	STEAM CONDENSATE	STRIPPED SOUR WATER G.O.H.	STRIPPED SOUR WATER TO N.H.	STRIPPED SOUR WATER BLEED	COOLING WATER	PLANT STEAM
FLOW RATE: 10^3 ACFM 10^3 lb/hr gpm	18.1	510(includes #124)	(included in # 110) N.D.	0.6	0.02	8.6 (A,B) 10.6 (C)	11	292	485(includes # 132)	(included in # 131) N.D.	19	6900	156
TEMP., °F	210	120	120	AMB	AMB	210	110	AMB	180	180	180	80	460
PRESS., psig	4	6	6	AMB	AMB	3	225	AMB	6	6	6	AMB	460

SOURCE: DRI based on U.S.S. Engineers and Consultants, Inc., April 1978

FIGURE 3.3-12 AMMONIA RECOVERY

biodegradable matter in wastewaters. The high purity, oxygen-activated sludge system was selected for the oxidation, and it is presented in Figure 3.3-13.

Activated sludge, nutrients, and stripped foul water (stream 38) are added to the bio-reactor, and pure oxygen from the oxygen plant is purged through the mixture. After a sufficient residence time, the mixture is clarified and filtered to produce both a treated water (stream 136) low in organic carbon and a sludge (stream 137). The water is used for processed shale dust control, while the digested sludge is used in revegetation of the processed shale disposal site.

3.3.13 Solid Waste Management

A conceptual drawing for solid waste disposal is presented in Figure 3.3-14. Davis Gulch, which is a side drainage of the Middle Fork of Parachute Creek in the northwestern portion of the Colony property, has been selected by Colony as the disposal site. Approximately 900 acres in the gulch will be covered with over 400 million tons of waste material at the completion of the project (20 years). The solid waste disposal technology described below is based on Colony's disposal permit from the Colorado Mined Land Reclamation Board. Colony has proposed to keep the hazardous wastes segregated from the nonhazardous wastes, but detailed plans for the disposal of hazardous wastes are not presented in the permit application. The following discussion applies to the disposal of nonhazardous wastes only.

The processed shale and other nonhazardous wastes will be combined and moisturized at the plant and then conveyed to the Davis Gulch disposal area. At the disposal area, the waste material will be loaded into 150-ton trucks and hauled to the active portion of the area.

The construction of the landfill will take place in three stages, beginning in the portion of the gulch nearest to the processing facility. This initial stage will last for approximately 7 1/3 years, during which time about 132 million tons of the waste material will be deposited. In the middle stage, the waste disposal will take place in the farthest portion of the gulch, and approximately 183 million tons of the wastes will be deposited over a period of 9 years. In the final stage, about 90 million tons of the wastes will be deposited to bridge the fills from the previous two stages.

The waste material will be placed in lifts of 6-18 inches for compaction. The bottom two feet of the wastes will be supercompacted to an in-place density in excess of 95 lb/ft^3 to form a liner which would isolate the wastes from the groundwater and spring seepage. The bulk of the fill will be compacted to a density of 85 lb/ft^3, except for the front and top two feet which will also be supercompacted to provide a cover to reduce the infiltration of runoff.

The face of the landfill will be constructed in a multiple-bench arrangement, with a segmented slope of no less than 3H:1V (3 units horizontal: 1 unit vertical) and an overall slope of 4H:1V. After every 45 feet in elevation, 15-foot wide benches will be constructed to allow for

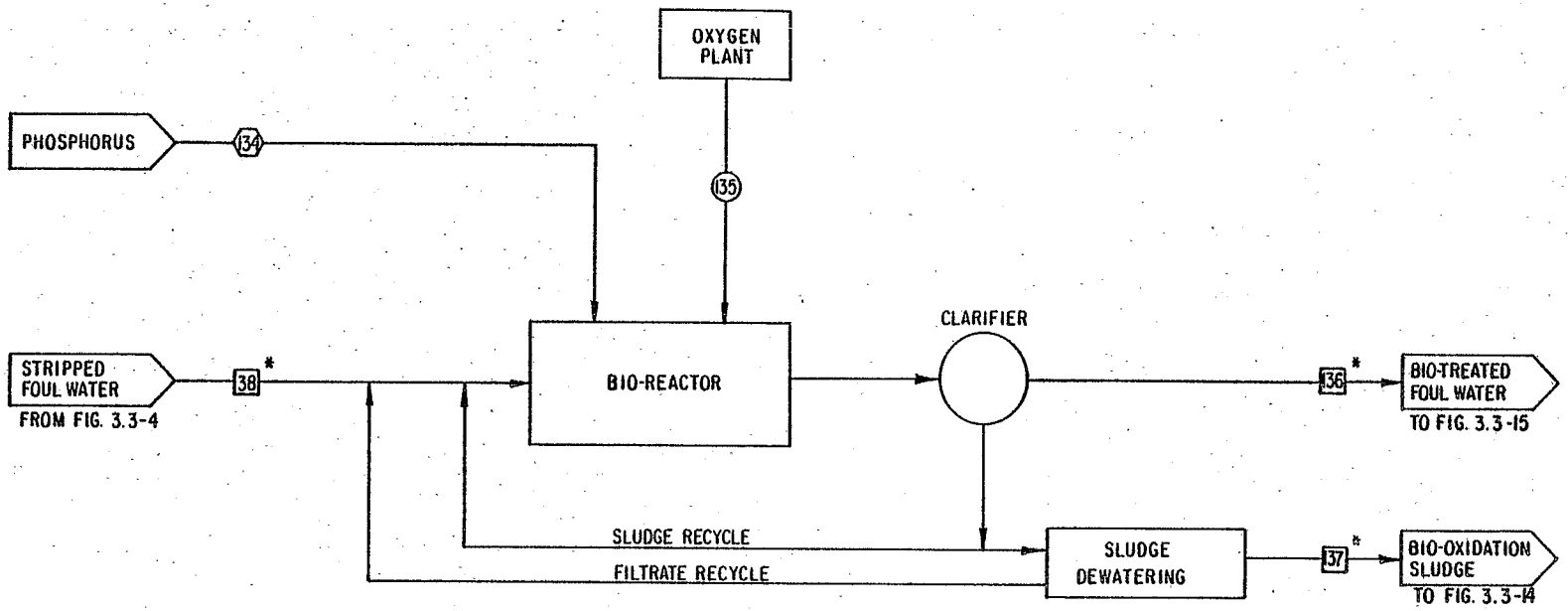

FOR LEGEND SEE FIGURE 3.3-1

STREAM NO.	38*	134	135	136*	137*
STREAM IDENTITY	STRIPPED FOUL WATER	PHOSPHORUS	OXYGEN	BIO-TREATED FOUL WATER	BIO-OXIDATION SLUDGE
FLOW RATE: 10^3 ACFM 10^3 lb/hr gpm	234.5 468	10 lb/hr	1.0	230.7 460	3.7 6
TEMP., °F	132	AMB	AMB	135	135
PRESS., psig	AMB	AMB	AMB	AMB	AMB

SOURCE: WPA

FIGURE 3.3-13 BIOLOGICAL OXIDATION, CASE STUDY B

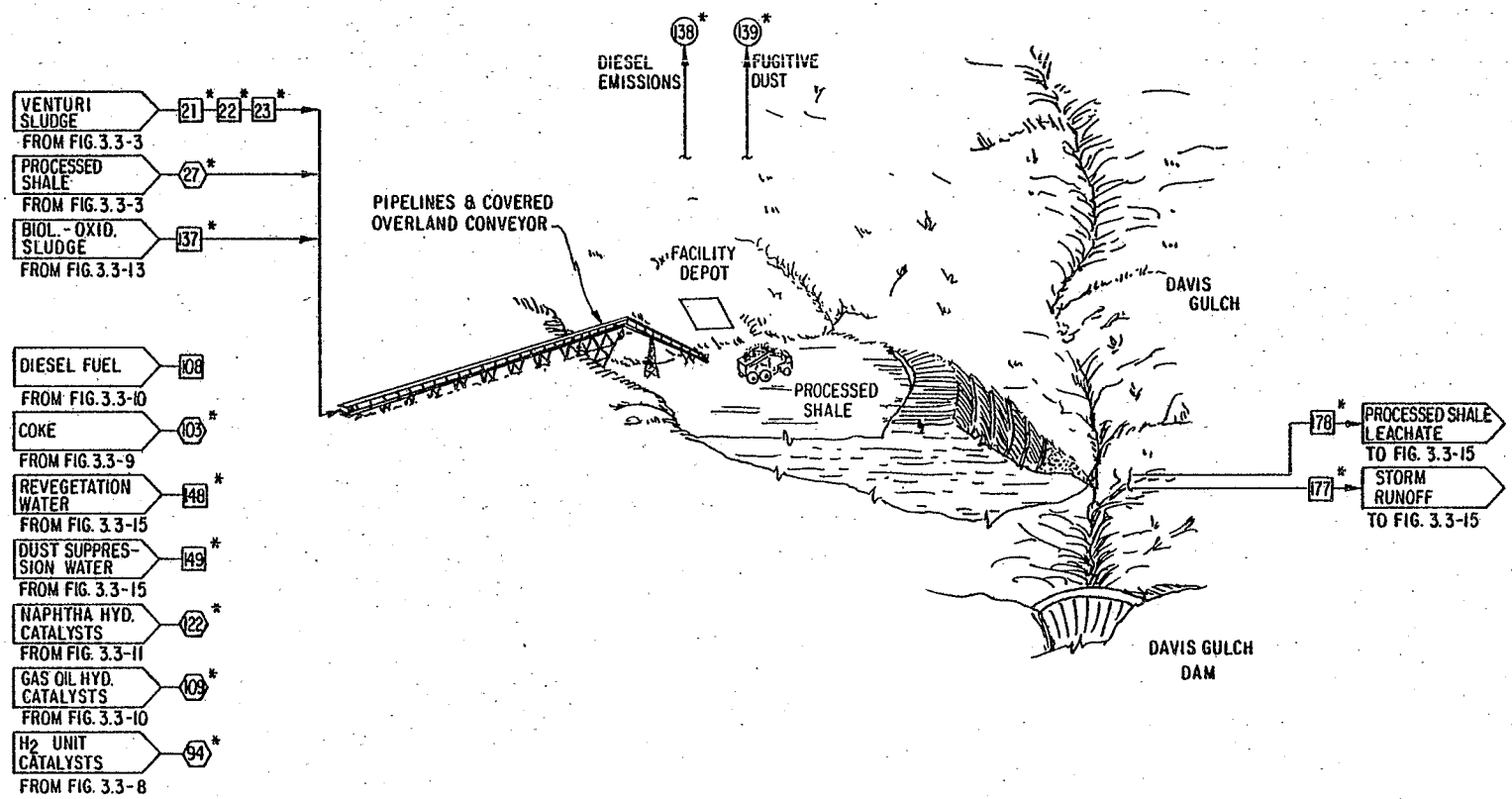

FOR LEGEND SEE FIGURE 3.3-1

STREAM NO.	21*	22*	23*	27*	94*	103*	108	109*	22*	137*	138*	139*	148*	149*	177*	178*
STREAM IDENTITY	VENTURI SLUDGE PRE-HEAT	VENTURI SLUDGE BALL ELUT.	VENTURI SLUDGE MOIST.	PROC. SHALE	SPENT CATALY. H_2	COKE	DIESEL FUEL	SPENT CATALY. G.O. HYD.	SPENT CATALY. NAPHT. HYD.	BIO-OX. SLUDGE	DIESEL EMISS.	FUGITIVE DUST	REVEG. WATER	DUST SUPPR. WATER (DISP.)	STORM RUNOFF	PROC. SHALE LEACH.
FLOW RATE: 10^3 ACFM 10^3 lb/hr gpm	143.4	10.8	7.2	5170	15.3 lb/hr	66.7	6	0-30 lb/hr	0-17.1 lb/hr	3.7 6	N.D.	N.D. (included in #81)	370	246	110	N.D.
TEMP., °F	N.D.	N.D.	N.D.	200	AMB	AMB	AMB	AMB	AMB	135	N.D.	AMB	AMB	AMB	AMB	AMB
PRESS., psig	AMB															AMB

SOURCE: DRI based on Colony Development Operation, March 1980

FIGURE 3.3-14 SOLID WASTE DISPOSAL

the passage of the disposal and compaction equipment. The benches will have a back slope of 10:1 to permit the collection of runoff.

After reaching a desired elevation, the landfill surface will be scarified and covered with 18 inches of previously stripped and stockpiled soil and subsoil. The surface will then be mulched, seeded, and irrigated as necessary to assure that the plant growth is reestablished. The final contouring of the landfill will include hills, valleys, and swells to blend into the surrounding terrain.

An embankment and collection pond will be constructed downstream from the landfill to collect the water from the Davis Gulch watershed. The water will include runoff from the landfill as well as runon from the area above the landfill. The runoff will be collected from the individual landfill benches using half-round pipes (1.5-foot diameter) installed at the junction of a bench and the landfill segment above it. The pipes will empty into lined ditches which route the water to the catchment pond. The runon will be collected above the landfill in unlined ditches which merge with the lined runoff collection ditches. The water collected in the catchment pond will be used for processed shale moisturizing.

In addition to the water collected in the catchment pond (streams 12, 150, 177, 178) many other waters, such as boiler blowdown (stream 168), cooling tower blowdown (stream 175 or 176) and stripped foul water (stream 38), are also used for processed shale moisturizing. Figures 3.3-15 through 3.3-18 (discussed in Section 3.3-14) give the makeup of the moisturizing water for the different case studies.

Transport of the wastes to the disposal area and subsequent compaction activities generate fugitive particulate emissions (stream 139). These emissions are controlled with dust suppression water (stream 149). The transportation and compaction vehicles create diesel emissions (stream 138) which are controlled by catalytic converters.

3.3.14 Water Management

Water management for all case studies is presented in Figure 3.3-15. Water management for the entire plant includes source water clarification, boiler and cooling tower feedwater treatments, steam generation, and distribution of water to wherever it is needed. Water needs and minimum quality requirements are closely associated to make the management economically effective and efficient.

Source water (stream 140) from the Colorado River is clarified and supplied to different processing and utility needs. A portion of the water is softened in a conventional zeolite system and then used as boiler feedwater makeup. The concentrate (stream 169) from the boiler feedwater treatment, as well as the blowdown from the boilers (stream 168), is placed in an equalization basin and eventually used in processed shale moisturizing.

The cooling tower feedwater treatment consists of the addition of sulfuric acid to prevent calcium carbonate scaling. Cooling tower blowdown

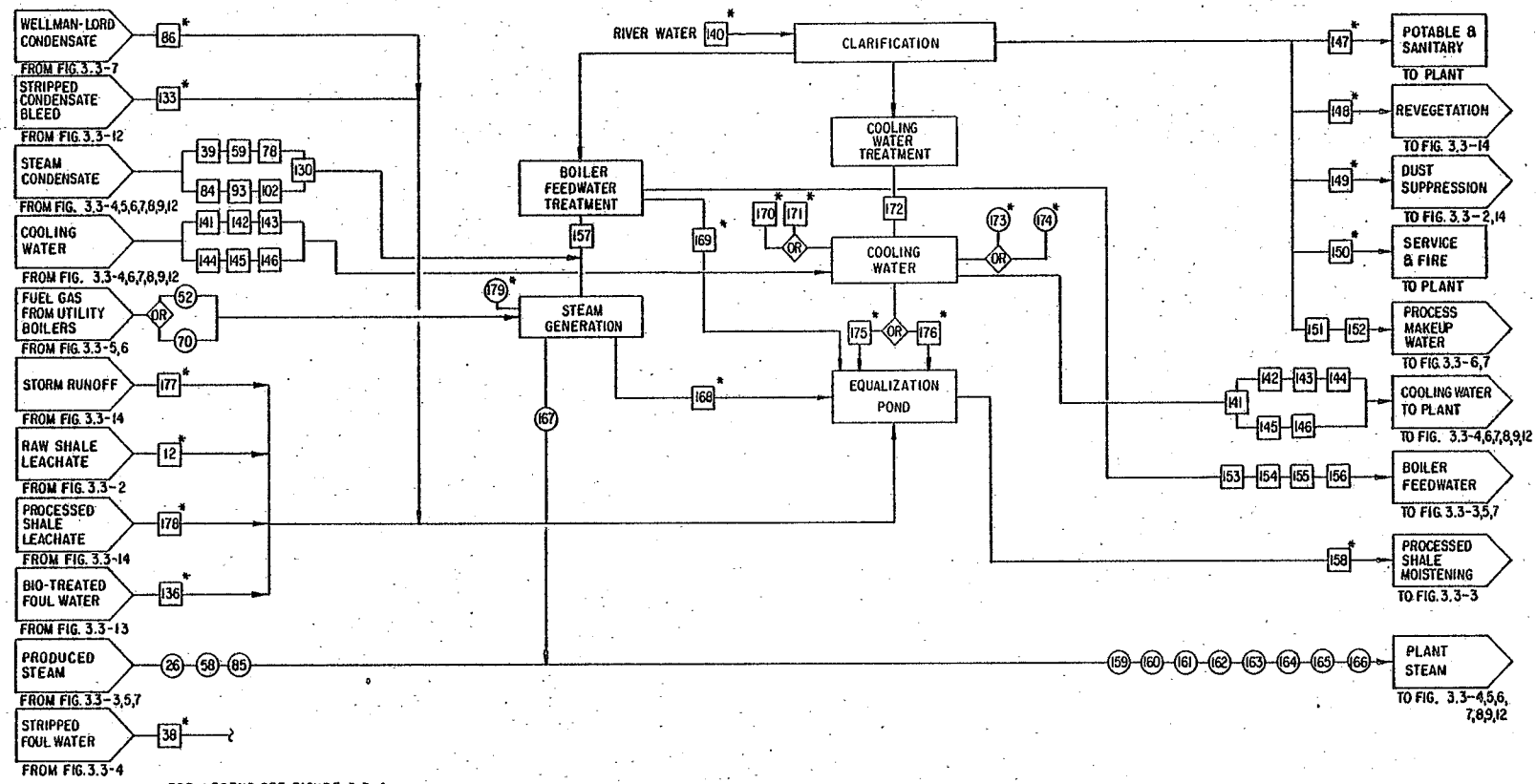

FOR LEGEND SEE FIGURE 3.3-1

STREAM NO.	12*	26 58 85			38*	39 59 78 84 93 102 130	52 70		86*	133*	136*	140*	141 TO 146	147*	148*	149*	150*	151 152						153 154 155 156 157	158*	159 TO 166	167	168*	169*	170*	171*	172	173*	174*	175*	176*	177*	178*	179*
STREAM IDENTITY	RAW SHALE LEACH	PRODUCED STEAM			STRIP FOUL WATER	STEAM CONDENSATE	FUEL GAS		W.L. CONDS.	STRIP COND. BLEED	BIO. TREAT F.W.	RIVER WATER	COOLING WATER	POTAB & SANIT	REVEG	DUST SUPR (TOT.)	SERV & FIRE	PROC. MAKEUP WATER		BOILER FEEDWATER					PROC SHLE MOIST	PLANT STEAM	TOTAL STM	BOILER BLO. DWN.		COOL. TWR. DRIFT		TREAT COOL. WATR.	COOL. TWR. EVAP		COOL TWR. BLO. DWN.		RUN-OFF	PROC. SHALE LEACH	FLUE GAS
FLOW RATE: 10^3ACFM						SEE FIGURES 3.3-4,5,6,7,8,9,12							SEE FIGURES 3.3-4,6,7,8,9,12													SEE FIGURES 3.3-4,5 6,7,8,9,12														222.2 (A,B) 155.3 (C)
10^3lb/hr																																							
gpm	N.D.	45	38	N.D.	468		9.8	10.7	44	19	460	5798-5884		20	370	876	36	65	2	300	90	76	N.D.	1522	1639		821	280	122	15	16	3060-3292	758	815	1530	1646	110	N.D.	
TEMP., °F	AMB	N.D.	N.D.	460	100-132	120	N.D.	N.D.	N.D.	180	135	AMB	80	AMB	←									AMB	AMB	360	360	N.D.	N.D.	AMB	AMB	N.D.	←						N.D.
PRESS., psig	AMB	N.D.	N.D.	460	AMB	AMB	N.D.	N.D.	N.D.	6	AMB	←												AMB	AMB	150	150	N.D.	AMB	AMB	AMB	N.D.	←						N.D.

SOURCE: WPA based on Colony Development Operation, 1974

FIGURE 3-3-15 WATER MANAGEMENT

(stream 175 or 176) is placed in the equalization basin, while the drift (stream 170 or 171) and evaporation (stream 173 or 174) are emitted to the atmosphere.

High quality water needs (e.g., for revegetation, fire and service, sanitary and potable uses) are fulfilled by the clarified source water. The equalization basin serves to provide low quality needs, such as processed shale moisturizing.

Figures 3.3-16 through 3.3-18 present overall water distribution schemes for the three case studies.

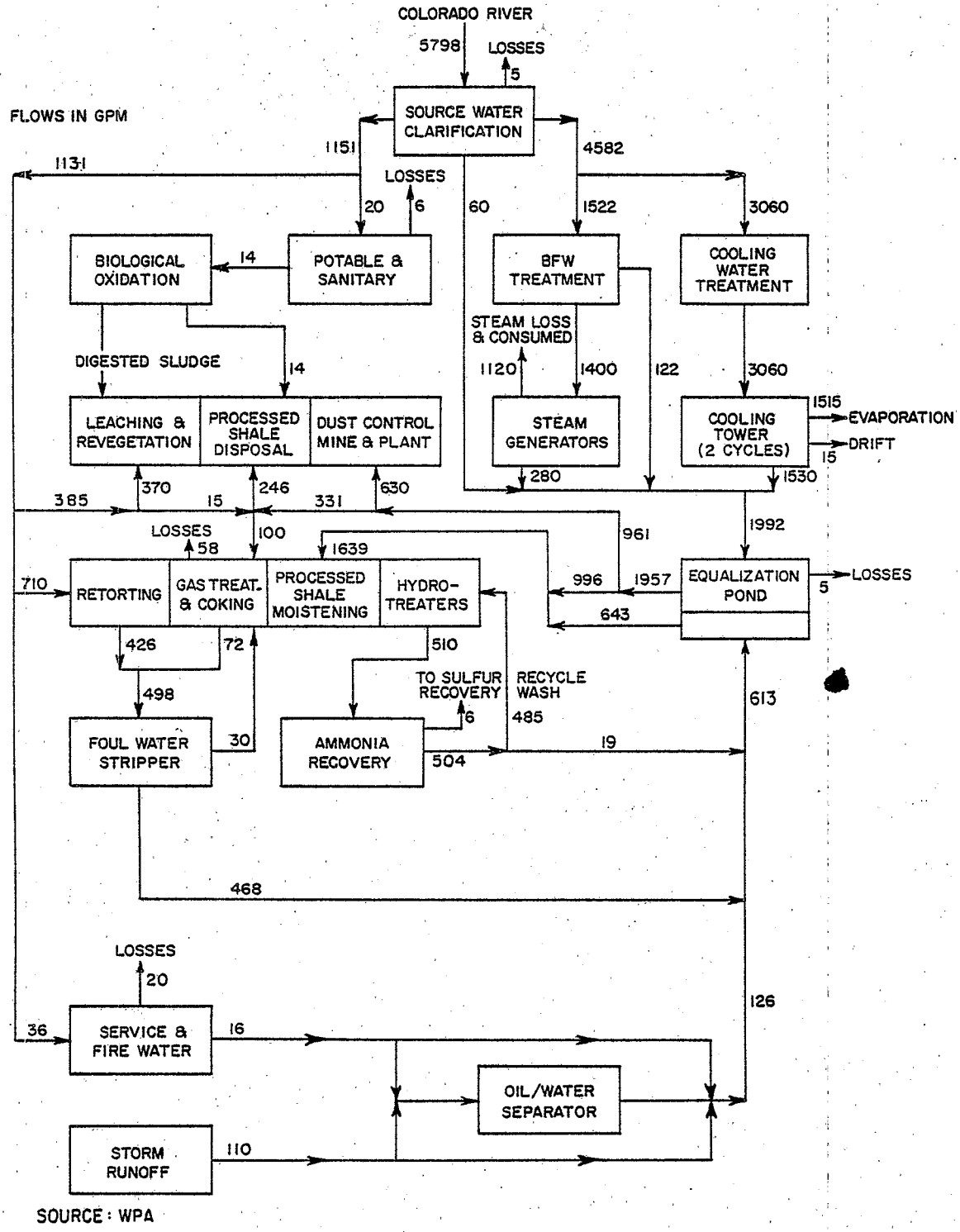

SOURCE: WPA

FIGURE 3.3-16 OVERALL WATER MANAGEMENT SCHEME, CASE STUDY A

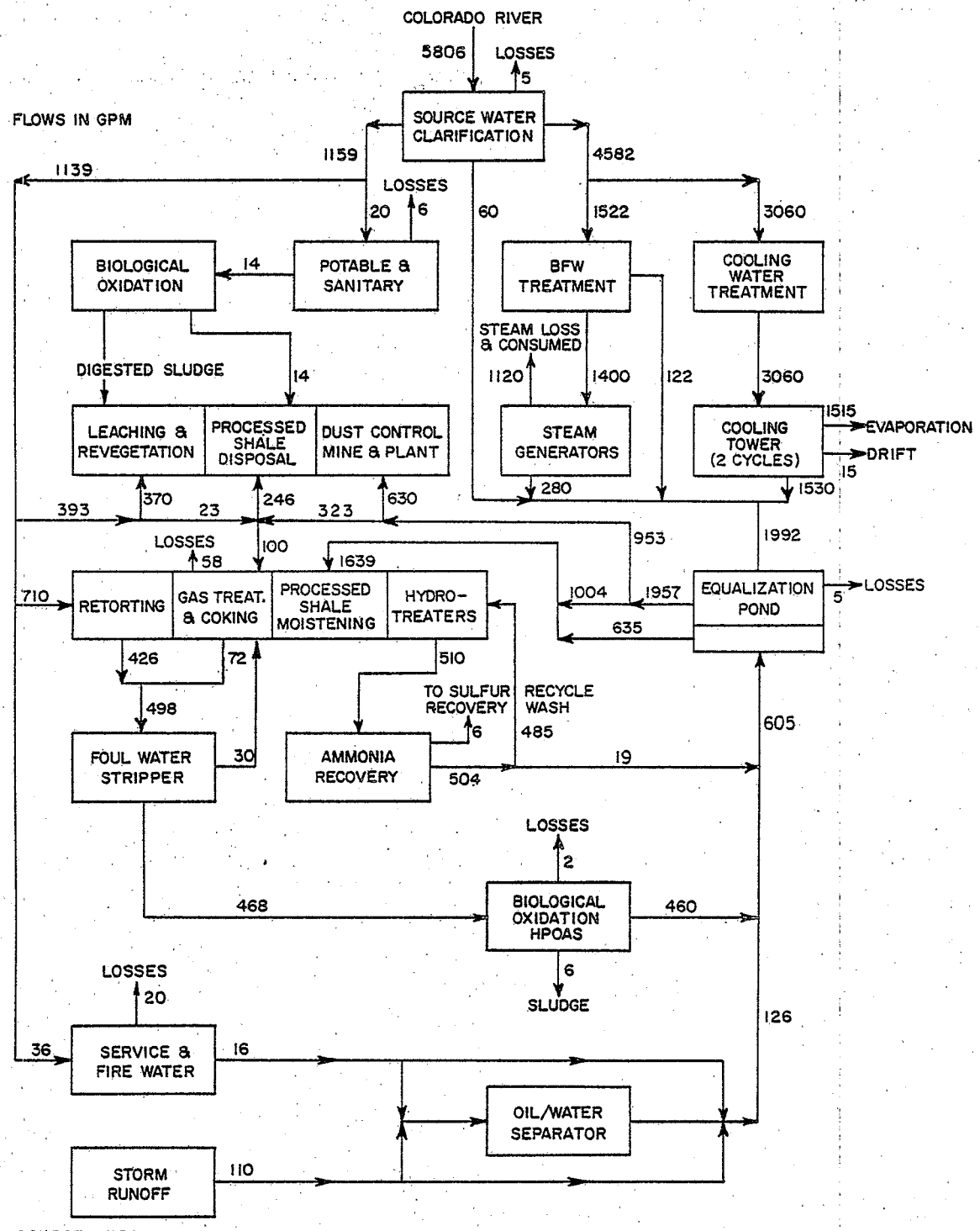

FIGURE 3.3-17 OVERALL WATER MANAGEMENT SCHEME, CASE STUDY B

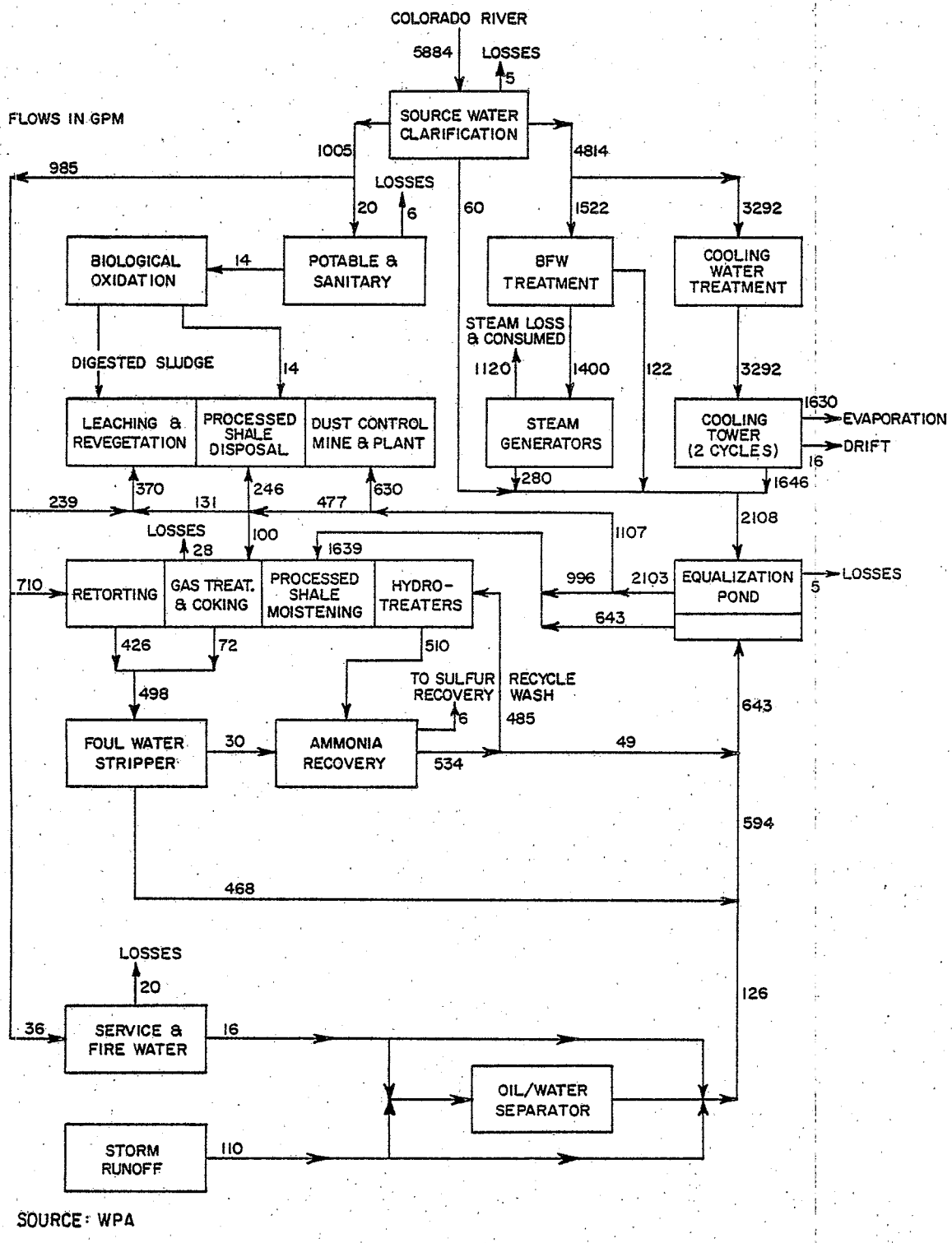

SOURCE: WPA

FIGURE 3.3-18 OVERALL WATER MANAGEMENT SCHEME, CASE STUDY C

SECTION 4

INVENTORY AND COMPOSITION OF PLANT PROCESS AND WASTE STREAMS

The stream compositions presented in this section were derived, to the extent possible, from pilot plant test data. In the absence of data from actual source testing, engineering analyses (by Denver Research Institute, Stone and Webster Engineering Corporation and Water Purification Associates) were performed on the technology and raw stream information from proposed industrial developments. The sources of these data, whether actual, estimated, or derived from published or unpublished information, are indicated.

The data presented are internally consistent for the overall plant complex; i.e., the principal chemical elements involved in emissions, effluents, and wastes are balanced throughout the plant. Trace elements generally are not considered because of the lack of consistent data available as a starting point. The stream compositions derived by engineering analysis generally agree with the available data from published sources. *Therefore, the data presented in this section, even though partly derived by engineering analysis, are believed to be both representative of the actual operations of such a plant and accurate enough to lead to relevant conclusions in analyses of various pollution controls.*

4.1 INVENTORY OF STREAMS

All but the most minor streams in the plant complex are inventoried in this section, and quantitative data are presented to define important characteristics of the streams. Section 4.2 presents detailed compositions of the major streams and shows changes in composition, from one point to the next, throughout the plant.

The streams encountered during the analysis of pollution control technologies for the plant are listed, along with their flow rates and components of concern, in Tables 4.1-1 (gases), 4.1-3 (liquids) and 4.1-5 (solids). Whether or not a stream must be controlled will depend upon its size, the quantities and characteristics of components, their allowable limits if released into the environment, and the disposition of the stream in an integrated plant design.

Tables 4.1-2, 4.1-4, and 4.1-6 list the major constituents in the streams. The streams are likewise divided into gases, liquids, and solids based on their physical characteristics. These tables summarize the data presented in Section 4.2, allowing for a quick comparison of the streams.

TABLE 4.1-1. INVENTORY OF GASEOUS STREAMS

Stream Number (Table No.)	Description of Stream	Mass Flow, 10^3 lb/hr (10^3 ACFM)	Components of Concern	Mass Flow of Component, lb/hr	Remarks[a]
2*	Portal Transfer Point, Baghouse Emission	(5.1)	Particulates	0.5	Baghouse controlled.
3*	Primary Crusher, Baghouse Emission	(62.1)	Particulates	7.2	Baghouse controlled.
4*	Reclaim Tunnel, Baghouse Emission	(48.0)	Particulates	5.6	Baghouse controlled.
5*	Transfer Tower Feed Bin, Baghouse Emission	(44.0)	Particulates	5.0	Baghouse controlled.
6*	Fine Ore Crushing and Screening, Baghouse Emission	(72.0)	Particulates	32.9	Baghouse controlled.
7*	Fine Ore Storage, Baghouse Emission	(36.0)	Particulates	4.2	Baghouse controlled.
8*	Fugitive Dust - Mining	N.D.[b]	Particulates	29.8	Water and foam spray controlled. Includes stream 139.
10*	Mine Vent Emission	(4,000)	CO NOx SO_2 Hydrocarbons Particulates	440.0 250.0 N.D. 50.0 25.0	In the mine, the dust is suppressed with water and foam applications, and catalytic converters are installed on the diesel-operated equipment.
11*	Mine Ventilation Air	(4,000)	--[c]	--	
13	Combustion Air to Ball Heater	502.0	--	--	
14	Combustion Air to Thermal Incinerator	648.4	--	--	
15	Combustion Air to Steam Superheater	131.3	--	--	
16	Quench Air to Lift Pipes	N.D.	--	--	
17	Pyrolysis Vapors	1,195	H_2S NH_3	12,320 770	Elemental sulfur is recovered either by the amine/Claus/Wellman-Lord processes or by the Stretford process. Ammonia is dissolved in the gas condensate and recovered by an ammonia recovery process.

(Continued)

TABLE 4.1-1 (cont.)

Stream Number (Table No.)	Description of Stream	Mass Flow, 10^3 lb/hr (10^3 ACFM)	Components of Concern	Mass Flow of Component, lb/hr	Remarks[a]
18* (4.2-22, 4.2-23)	Venturi Emission from Preheat Stack	(1,272.0)	NOx SO_2 Particulates Hydrocarbons CO	1,314.8 51.0 81 270 43.9	Crude shale oil is the predominant fuel used in the preheat system. According to the information in the Colony PSD permit application, about 95% of the flue gas SO_2 is adsorbed on the raw shale. Particulates are controlled by wet scrubbers.
19* (4.2-22, 4.2-23)	Venturi Emission from Ball Elutriator	(265.8)	CO NOx SO_2 Particulates Hydrocarbons	2.8 113.4 94.3 37.8 0.3	The emission is wet-scrubbed before being released to the atmosphere.
20*	Venturi Emission from Processed Shale Moisturizer	(266.4)	Particulates	38.3	See stream 19.
24 (4.2-22, 4.2-23)	Hot Flue Gas from Steam Superheater	138.4	NOx SO_2	165.9 106.4	Crude shale oil is used as a fuel to fire the steam superheater. The flue gas is used for dedusting the balls.
25	Superheated Steam	150	--	--	The steam is used in the pyrolysis unit for achieving seals around moving parts.
26	Steam from Processed Shale Cooler	45	--	--	Low pressure steam is obtained and used for various plant needs.
28 (4.2-15)	Raw Retort Gas from Pyrolysis Fractionator	251.0	H_2S Organic Sulfur Compounds	12,320 146	Sulfur is recovered from hydrogen sulfide before burning the retort gas. Organic sulfur compounds are very low in concentration.
32 (4.2-17, 4.2-18, 4.2-19)	C_2 and Lighter Gases - Untreated	212.2	H_2S Organic Sulfur Compounds	12,200 135	Sulfur is recovered from hydrogen sulfide before burning the retort gas. Other sulfur compounds are negligible in quantity.
33 (4.2-16, 4.2-18)	C_2 and Lighter Gases - Treated (Case Studies A, B)	121.7	H_2S Organic Sulfur Compounds	32.5 74.0	Most of the H_2S is removed by the amine/Claus/Wellman-Lord processes.

(Continued)

TABLE 4.1-1 (cont.)

Stream Number (Table No.)	Description of Stream	Mass Flow, 10^3 lb/hr (10^3 ACFM)	Components of Concern	Mass Flow of Component, lb/hr	Remarks[a]
34 (4.2-19)	C_2 and Lighter Gases - Treated (Case Study C)	196.1	H_2S	9.2	Most of the H_2S is removed by the Stretford process.
			Organic Sulfur Compounds	106.4	
35 (4.2-17, 4.2-20, 4.2-21)	C_3/C_4 Gases - Untreated	65.0	H_2S	123.0	Hydrogen sulfide is removed before selling the C_3 product and burning the C_4 liquid.
			Organic Sulfur Compounds	11.1	
36 (4.2-20)	C_3/C_4 Gases - Treated (Case Studies A, B)	64.9	H_2S	6.1	Most of the sulfur compounds are reduced in the treated gas by the amine/Claus/Wellman-Lord processes.
			Organic Sulfur Compounds	10.6	
37 (4.2-29, 4.2-31)	Foul Water Stripper Overhead	18.1	H_2S	481	Sulfur and ammonia are recovered from the overhead before it is released to the atmosphere.
			NH_3	722	
43 (4.2-24)	Combustion Air to Claus Unit	32.9	--	--	
44	Fuel Gas to Ball Heater (Case Studies A, B)	23.1	H_2S	6.2	Treated fuel gas is used for combustion. Sulfur dioxide from fuel combustion is in minor quantity.
			Organic Sulfur Compounds	14.0	
45	Fuel Gas to Gas Oil Reboiler (Case Studies A, B)	3.9	H_2S	1.0	See stream 44.
			Organic Sulfur Compounds	2.4	
46 (4.2-25)	Fuel Gas to Wellman-Lord (Case Studies A, B)	4.2	H_2S	1.1	See stream 44.
			Organic Sulfur Compounds	2.6	
47	Fuel Gas to Steam Reformer Furnace (Case Studies A, B)	29.3	H_2S	7.8	See stream 44.
			Organic Sulfur Compounds	17.8	
48	Fuel Gas to Delayed Coker (Case Studies A, B)	3.0	H_2S	0.8	See stream 44.
			Organic Sulfur Compounds	1.8	
49	Fuel Gas to Gas Oil Hydrotreater (Case Studies A, B)	1.0	H_2S	0.3	See stream 44.
			Organic Sulfur Compounds	0.6	

(Continued)

TABLE 4.1-1 (cont.)

Stream Number (Table No.)	Description of Stream	Mass Flow, 10^3 lb/hr (10^3 ACFM)	Components of Concern	Mass Flow of Component, lb/hr	Remarks[a]
50	Fuel Gas to Naphtha Hydrotreater (Case Studies A, B)	0.4	H_2S Organic Sulfur Compounds	0.1 0.2	See stream 44.
51	Fuel Gas to Thermal Incinerator (Case Studies A, B)	N.D.	H_2S COS	N.D. N.D.	See stream 44.
52	Fuel Gas to Utility Boilers (Case Studies A, B)	9.8	H_2S Organic Sulfur Compounds	2.6 6.0	See stream 44.
53	Fuel Gas to Steam Reforming (Case Studies A, B)	40.3	H_2S Organic Sulfur Compounds	10.8 24.5	See stream 44.
56 (4.2-24)	Acid Gas from Amine System (Case Studies A, B)	90.8	H_2S Organic Sulfur Compounds	12,281 60	The acid gases are treated by the Claus/Wellman-Lord processes before being released to the atmosphere.
57 (4.2-24, 4.2-25)	Tail Gas from Claus Unit (Case Studies A, B)	117.4	H_2S SO_2	617 580	The tail gas is treated by the Wellman-Lord process to reduce sulfur emission.
58	Steam from Claus Unit (Case Studies A, B)	38	--	--	Low pressure steam is produced from treated boiler feedwater.
61	Stripping Air to Stretford Unit (Case Study C)	N.D.	--	--	
63	Fuel Gas to Ball Heater (Case Study C)	59.8	H_2S Organic Sulfur Compounds	2.8 32.4	The fuel gas is treated by the Stretford process. Sulfur dioxide produced from fuel combustion is low in quantity, so it is not controlled further.
64	Fuel Gas to Gas Oil Reboiler (Case Study C)	6.4	H_2S Organic Sulfur Compounds	0.3 3.4	See stream 63.
65	Fuel Gas to Steam Reformer Furnace (Case Study C)	47.1	H_2S Organic Sulfur Compounds	2.21 25.6	See stream 63.

(Continued)

TABLE 4.1-1 (cont.)

Stream Number (Table No.)	Description of Stream	Mass Flow, 10^3 lb/hr (10^3 ACFM)	Components of Concern	Mass Flow of Component, lb/hr	Remarks[a]
66	Fuel Gas to Delayed Coker (Case Study C)	4.9	H_2S	0.2	See stream 63.
			Organic Sulfur Compounds	2.6	
67	Fuel Gas to Gas Oil Hydrotreater (Case Study C)	1.6	H_2S	0.1	See stream 63.
			Organic Sulfur Compounds	0.8	
68	Fuel Gas to Naphtha Hydrotreater (Case Study C)	0.7	H_2S	<0.1	See stream 63.
			Organic Sulfur Compounds	0.4	
69	Fuel Gas to Thermal Incinerator (Case Study C)	N.D.	H_2S	N.D.	See stream 63.
			Organic Sulfur Compounds	N.D.	
70	Fuel Gas to Utility Boilers (Case Study C)	10.7	H_2S	0.5	See stream 63.
			Organic Sulfur Compounds	5.7	
71	Fuel Gas to Steam Reforming (Case Study C)	64.5	H_2S	3.0	Sulfur compounds are further reduced before producing hydrogen.
			Organic Sulfur Compounds	34.9	
72 (4.2-21)	C_3/C_4 Gases - Treated (Case Study C)	64.9	H_2S	1.4	Sulfur is removed by the Stretford process.
			Organic Sulfur Compounds	8.0	
75	Stretford Oxidizer Vent Gas (Case Study C)	N.D.	--	--	The vent gas is mostly stripping air, carbon dioxide and some water vapor.
79 (4.2-25)	Combustion Air to Wellman-Lord Unit (Case Studies A, B)	85.9	--	--	
82* (4.2-25)	Flue Gas from Wellman-Lord Unit (Case Studies A, B)	204.0	NOx	49	The flue gas is released to the atmosphere.
			SO_2	139	
83 (4.2-24, 4.2-25)	Wellman-Lord Acid Gas Recycle to Claus Unit (Case Studies A, B)	1.7	SO_2	1,604	This is an internal recycle stream.

(Continued)

TABLE 4.1-1 (cont.)

Stream Number (Table No.)	Description of Stream	Mass Flow, 10^3 lb/hr (10^3 ACFM)	Components of Concern	Mass Flow of Component, lb/hr	Remarks[a]
85	High Pressure Steam from Wellman-Lord Waste Heat Boiler (Case Studies A, B)	N.D.	--	--	
91* (4.2-22, 4.2-23)	Flue Gas from Steam Reforming Furnace	666.6-685.3	NOx SO_2 Particulates	82.2 27.4-33.0 11.4	Only treated fuel gas is used in the furnace. Further emission control is not necessary.
92	Acid Gas Recycle to Oil and Gas Recovery Unit - Steam Reformer	N.D.	H_2S	N.D.	This is an internal recycle stream. H_2S is eventually recovered.
95	Hydrogen to Gas Oil Hydrotreater	N.D.	--	--	Pure hydrogen is obtained by steam reforming.
96	Hydrogen to Naphtha Hydrotreater	N.D.	--	--	See stream 95.
97*	Flue Gas from Steam Reformer Regenerator	242	--	--	The emission is essentially steam and carbon dioxide.
98	Overhead Gas from Delayed Coker	N.D.	H_2S NH_3	N.D. N.D.	The gas is sent to the oil and gas recovery unit for eventual removal of H_2S and NH_3.
104* (4.2-22, 4.2-23)	Flue Gas from Delayed Coker	68.8-70.9	NOx SO_2	8.4 2.8-3.4	Treated fuel gas is used for combustion. Further emission control is not necessary.
106	Overhead Gas from Gas Oil Hydrotreater	N.D.	H_2S NH_3	N.D. N.D.	See stream 98.
118* (4.2-22, 4.2-23)	Flue Gas from Gas Oil Feed Furnace	22.3-23.0	NOx SO_2 Particulates	2.7 0.9-1.1 0.4	See stream 104.
119* (4.2-22, 4.2-23)	Flue Gas from Gas Oil Reboiler Furnace	90.0-92.6	NOx SO_2 Particulates	11.2 3.8-4.5 1.6	Treated fuel gas is used. Further control is not necessary.
121	Overhead Gas from Naphtha Hydrotreater	N.D.	H_2S NH_3	N.D. N.D.	See stream 98.

(Continued)

TABLE 4.1-1 (cont.)

Stream Number (Table No.)	Description of Stream	Mass Flow, 10^3 lb/hr (10^3 ACFM)	Components of Concern	Mass Flow of Component, lb/hr	Remarks[a]
125* (4.2-22, 4.2-23)	Flue Gas from Naphtha Hydrotreater	10.0-10.3	NOx SO_2 Particulates	1.3 0.4-0.5 0.2	See stream 119.
128 (4.2-19, 4.2-24, 4.2-30, 4.2-31)	Overhead Vapors from Ammonia Recovery Unit	8.6-10.6	NH_3 H_2S	56-60 5,335-5,816	Hydrogen sulfide in the overhead is removed by the Claus or Stretford sulfur recovery processes.
135	Oxygen to Bio-oxidation Unit (Case Study B)	1.0	--	--	Pure oxygen is made in the oxygen plant.
138*	Diesel Emission - Disposal Equipment	N.D.	CO NOx SO_2 Hydrocarbons Particulates	23.0 267.9 20.0 7.7 19.0	Catalytic converters are installed on the diesel-operated equipment.
139*	Fugitive Dust - Disposal	N.D.	Particulates	N.D.	See stream 8.
159	Steam to Oil and Gas Recovery Unit	32.5	--	--	The steam is raised from treated boiler feedwater.
160	Steam to DEA Unit (Case Studies A, B)	121	--	--	See stream 159.
161	Steam to Stretford Unit (Case Study C)	19	--	--	See stream 159.
162	Steam to Wellman-Lord Unit (Case Studies A, B)	N.D.	--	--	Included in stream 160.
163	Steam to Steam Reformer	224	--	--	See stream 159.
164	Steam to Delayed Coker Feed Heater	N.D.	--	--	See stream 159.
165	Steam to Delayed Coker Drums	36	--	--	See stream 159.
166	Steam to Ammonia Recovery Unit	156	--	--	See stream 159.
167	Total Plant Steam	821	--	--	See stream 159.

(Continued)

TABLE 4.1-1 (cont.)

Stream Number (Table No.)	Description of Stream	Mass Flow, 10^3 lb/hr (10^3 ACFM)	Components of Concern	Mass Flow of Component, lb/hr	Remarks[a]
173*	Cooling Tower Evaporation (Case Studies A, B)	758	--	--	The emission is essentially water vapor.
174*	Cooling Tower Evaporation (Case Study C)	815	--	--	See stream 173.
179* (4.2-22, 4.2-23)	Flue Gas from Utility Boilers	155.3-222.2	NOx SO_2 Particulates	21.6 7.2-7.5 2.9	Treated fuel gas is used for the steam boilers. Additional control is not employed.

* Indicates streams that come into contact with the environment.

[a] The remarks indicate the stream disposition. The control technologies applied to the streams are those proposed by Colony.

[b] N.D. = Not determined.

[c] Dashes (--) indicate no known components of concern.

Source: DRI estimates based on information from Colony Development Operation, 1974 and 1977.

TABLE 4.1-2. COMPOSITIONS OF GASEOUS STREAMS

Stream Number (Table No.)	Stream Description	Mass Flow, 10^3 lb/hr (10^3 ACFM)	Components, 10^3 lb/hr											
			H_2	CO	CO_2	N_2	NH_3	H_2S	CH_4	C_2H_4	C_2H_6	C_3H_6	C_3H_8	C_4H_8
2*	Portal Transfer Point, Baghouse Emission	(5.1)	0**	0	0	N.D.**	0	0	0	0	0	0	0	0
3*	Primary Crusher, Baghouse Emission	(62.1)	0	0	0	N.D.	0	0	0	0	0	0	0	0
4*	Reclaim Tunnel, Baghouse Emission	(48.0)	0	0	0	N.D.	0	0	0	0	0	0	0	0
5*	Transfer Tower Feed Bin, Baghouse Emission	(44.0)	0	0	0	N.D.	0	0	0	0	0	0	0	0
6*	Fine Ore Crushing and Screening, Baghouse Emission	(72.0)	0	0	0	N.D.	0	0	0	0	0	0	0	0
7*	Fine Ore Storage, Baghouse Emission	(36.0)	0	0	0	N.D.	0	0	0	0	0	0	0	0
8*	Fugitive Dust - Mining (stream 139 included)	N.D.	0	N.D.	N.D.	N.D.	0	0	N.D.	0	0	0	0	0
10*	Mine Vent Emission	(4,000)	0	0.44	N.D.	N.D.	0	0	0	0	0	0	0	0
11*	Mine Ventilation Air	(4,000)	0	0	0	N.D.	0	0	0	0	0	0	0	0
13	Combustion Air to Ball Heater	502.0	0	0	0	382.6	0	0	0	0	0	0	0	0
14	Combustion Air to Thermal Incinerator	648.4	0	0	0	494.2	0	0	0	0	0	0	0	0
15	Combustion Air to Steam Superheater	131.3	0	0	0	100.1	0	0	0	0	0	0	0	0
16	Quench Air to Lift Pipes	N.D.	0	0	0	N.D.	0	0	0	0	0	0	0	0
17	Pyrolysis Vapors	1,195	3.59	8.38	79.07	N.D.	0.77	12.32	28.51	20.73	20.16	26.48	13.03	16.24
18* (4.2-22, 4.2-23)	Venturi Emission from Preheat Stack	(1,272.0)	0	0.044	314.4	1,636.2	N.D.	0	0	0	0	0	0	0
19* (4.2-22, 4.2-23)	Venturi Emission from Ball Elutriator	(265.8)	0	0.0028	20.4	100.1	0	0	0	0	0	0	0	0

(Continued)

TABLE 4.1-2 (cont.)

Stream Number (Table No.)	Stream Description	Mass Flow, 10^3 lb/hr (10^3 ACFM)	Components, 10^3 lb/hr												
			C_4H_{10}	Misc. HC	Naphtha	Gas Oil	Bottoms Oil	COS	CS_2	CH_3SH	H_2O	O_2	NOx lb/hr	SO_2 lb/hr	TPM lb/hr
2*	Portal Transfer Point, Baghouse Emission	(5.1)	0	0	0	0	0	0	0	0	N.D.	N.D.	0	0	0.5
3*	Primary Crusher, Baghouse Emission	(62.1)	0	0	0	0	0	0	0	0	N.D.	N.D.	0	0	7.2
4*	Reclaim Tunnel, Baghouse Emission	(48.0)	0	0	0	0	0	0	0	0	N.D.	N.D.	0	0	5.6
5*	Transfer Tower Feed Bin, Baghouse Emission	(44.0)	0	0	0	0	0	0	0	0	N.D.	N.D.	0	0	5.0
6*	Fine Ore Crushing and Screening, Baghouse Emission	(72.0)	0	0	0	0	0	0	0	0	N.D.	N.D.	0	0	32.9
7*	Fine Ore Storage, Baghouse Emission	(36.0)	0	0	0	0	0	0	0	0	N.D.	N.D.	0	0	4.2
8*	Fugitive Dust - Mining (stream 139 included)	N.D.	0	0	0	0	0	0	0	0	N.D.	N.D.	N.D.	N.D.	29.8
10*	Mine Vent Emission	(4,000)	0	50.0 lb/hr	0	0	0	0	0	0	N.D.	N.D.	250.0	N.D.	25.0
11*	Mine Ventilation Air	(4,000)	0	0	0	0	0	0	0	0	N.D.	N.D.	0	0	0
13	Combustion Air to Ball Heater	502.0	0	0	0	0	0	0	0	0	3.2	116.2	0	0	0
14	Combustion Air to Thermal Incinerator	648.4	0	0	0	0	0	0	0	0	4.1	150.1	0	0	0
15	Combustion Air to Steam Superheater	131.3	0	0	0	0	0	0	0	0	0.8	30.4	0	0	0
16	Quench Air to Lift Pipes	N.D.	0	0	0	0	0	0	0	0	N.D.	N.D.	0	0	0
17	Pyrolysis Vapors	1,195	10.52	0	106	450	189	0	0	0	210	0	0	0	0
18* (4.2-22, 4.2-23)	Venturi Emission from Preheat Stack	(1,272.0)	0	0.27	0	0	0	0	0	0	169.3	137.4	1,314.8	51.0	81
19* (4.2-22, 4.2-23)	Venturi Emission from Ball Elutriator	(265.8)	0	0.0003	0	0	0	0	0	0	9.3	8.3	113.4	94.3	37.8

(Continued)

TABLE 4.1-2 (cont.)

Stream Number (Table No.)	Stream Description	Mass Flow, 10^3 lb/hr (10^3 ACFM)	Components, 10^3 lb/hr											
			H_2	CO	CO_2	N_2	NH_3	H_2S	CH_4	C_2H_4	C_2H_6	C_3H_6	C_3H_8	C_4H_8
20*	Venturi Emission from Processed Shale Moisturizer	(266.4)	0	0	0	N.D.	0	0	0	0	0	0	0	0
24 (4.2-22, 4.2-23)	Hot Flue Gas from Steam Superheater	138.4	0	N.D.	20.4	100.1	0	0	N.D.	0	0	0	0	0
25	Superheated Steam	150	0	0	0	0	0	0	0	0	0	0	0	0
26	Steam from Processed Shale Cooler	45	0	0	0	0	0	0	0	0	0	0	0	0
28 (4.2-15)	Raw Retort Gas from Pyrolysis Fractionator	251.0	3.59	8.38	79.07	0	0	12.32	28.51	20.73	20.16	26.48	13.03	16.24
32 (4.2-17, 4.2-18, 4.2-19)	C_2's and Lighter Gases - Untreated	212.2	3.59	8.38	79.07	0	0	12.20	52.51	34.38	19.96	1.32	0.65	0
33 (4.2-16, 4.2-18)	C_2 and Lighter Gases - Treated (Case Studies A, B)	121.7	3.59	8.38	0.79	0	0	0.032	52.51	34.38	19.96	1.32	0.65	0
34 (4.2-19)	C_2 and Lighter Gases - Treated (Case Study C)	196.1	3.59	8.38	75.16	0	0	0.0092	52.51	34.38	19.96	1.32	0.65	0
35 (4.2-17, 4.2-20, 4.2-21)	C_3/C_4 Gases - Untreated	65.0	0	0	0	0	0	0.123	0	0.347	0.202	25.2	12.4	16.2
36 (4.2-20)	C_3/C_4 Gases - Treated (Case Studies A, B)	64.9	0	0	0	0	0	0.0061	0	0.347	0.202	25.2	12.4	16.2
37 (4.2-29, 4.2-31)	Foul Water Stripper Overhead	18.1	0	0	0.935		0.722	0.481	0	0	0	0	0	0
43 (4.2-24)	Combustion Air to Claus Unit	32.9	0	0	0	25.1	0	0	0	0	0	0	0	0
44	Fuel Gas to Ball Heater (Case Studies A, B)	23.1	0.68	1.59	0.15	0	0	0.0062	9.98	6.53	3.79	0.25	0.123	0

(Continued)

TABLE 4.1-2 (cont.)

Stream Number (Table No.)	Stream Description	Mass Flow, 10^3 lb/hr (10^3 ACFM)	Components, 10^3 lb/hr												
			C_4H_{10}	Misc. HC	Naphtha	Gas Oil	Bottoms Oil	COS	CS_2	CH_3SH	H_2O	O_2	NOx lb/hr	SO_2 lb/hr	TPM lb/hr
20*	Venturi Emission from Processed Shale Moisturizer	(266.4)	0	0	0	0	0	0	0	0	N.D.	N.D.	0	0	38.3
24 (4.2-22, 4.2-23)	Hot Flue Gas from Steam Superheater	138.4	0	0	0	0	0	0	0	0	9.3	8.3	165.9	106.4	N.D.
25	Superheated Steam	150	0	0	0	0	0	0	0	0	150	0	0	0	0
26	Steam from Processed Shale Cooler	45	0	0	0	0	0	0	0	0	45	0	0	0	0
28 (4.2-15)	Raw Retort Gas from Pyrolysis Fractionator	251.0	10.52	0	0	0	0	0.121	0	0.025	12.0	0	0	0	0
32 (4.2-17, 4.2-18, 4.2-19)	C_2's and Lighter Gases - Untreated	212.2	0	N.D.	0	0	0	0.12	0	0.0145	0	0	0	0	0
33 (4.2-16, 4.2-18)	C_2 and Lighter Gases - Treated (Case Studies A, B)	121.7	0	0	0	0	0	0.0595	0	0.0145	0	0	0	0	0
34 (4.2-19)	C_2 and Lighter Gases - Treated (Case Study C)	196.1	0	0	0	0	0	0.102	0	0.0044	0	0	0	0	0
35 (4.2-17, 4.2-20, 4.2-21)	C_3/C_4 Gases - Untreated	65.0	10.52	N.D.	0	0	0	0.001	0	0.0101	0	0	0	0	0
36 (4.2-20)	C_3/C_4 Gases - Treated (Case Studies A, B)	64.9	10.52	N.D.	0	0	0	0.0005	0	0.0101	0	0	0	0	0
37 (4.2-29, 4.2-31)	Foul Water Stripper Overhead	18.1	0	0.539	0	0	0	0	0	0	15.44	0	0	0	0
43 (4.2-24)	Combustion Air to Claus Unit	32.9	0	0	0	0	0	0	0	0	0.21	7.6	0	0	0
44	Fuel Gas to Ball Heater (Case Studies A, B)	23.1	0	0	0	0	0	0.011	0	0.0030	0	0	0	0	0

(Continued)

TABLE 4.1-2 (cont.)

Stream Number (Table No.)	Stream Description	Mass Flow, 10^3 lb/hr (10^3 ACFM)	Components, 10^3 lb/hr											
			H_2	CO	CO_2	N_2	NH_3	H_2S	CH_4	C_2H_4	C_2H_6	C_3H_6	C_3H_8	C_4H_8
45	Fuel Gas to Gas Oil Reboiler (Case Studies A, B)	3.9	0.12	0.27	0.03	0	0	0.0011	1.70	1.12	0.65	0.04	0.02	0
46 (4.2-25)	Fuel Gas to Wellman-Lord (Case Studies A, B)	4.2	0.12	0.29	0.03	0	0	0.001	1.81	1.19	0.69	0.05	0.02	0
47	Fuel Gas to Steam Reformer Furnace (Case Studies A, B)	29.3	0.86	2.02	0.19	0	0	0.0078	12.64	8.28	4.81	0.32	0.16	0
48	Fuel Gas to Delayed Coker (Case Studies A, B)	3.0	0.089	0.21	0.02	0	0	0.0008	1.30	0.85	0.50	0.033	0.016	0
49	Fuel Gas to Gas Oil Hydrotreater (Case Studies A, B)	1.0	0.029	0.067	0.006	0	0	0.0003	0.42	0.28	0.16	0.01	0.005	0
50	Fuel Gas to Naphtha Hydrotreater (Case Studies A, B)	0.4	0.012	0.03	0.003	0	0	0.0001	0.19	0.12	0.07	0.005	0.002	0
51	Fuel Gas to Thermal Incinerator (Case Studies A, B)	N.D.	N.D.	N.D.	N.D.	0	0	N.D.	N.D.	N.D.	N.D.	N.D.	N.D.	0
52	Fuel Gas to Utility Boilers (Case Studies A, B)	9.8	0.29	0.67	0.063	0	0	0.0026	4.21	2.76	1.60	0.106	0.052	0
53	Fuel Gas to Steam Reforming (Case Studies A, B)	40.3	1.19	2.78	0.26	0	0	0.0108	17.4	11.4	6.61	0.438	0.216	0
56 (4.2-24)	Acid Gas from Amine System (Case Studies A, B)	90.8	0	0	78.28	0	0	12.28	0	0	0	0	0	0
57 (4.2-24, 4.2-25)	Tail Gas from Claus Unit (Case Studies A, B)	117.4	0	0	78.32	25.08	0	0.62	0	0	0	0	0	0
58	Steam from Claus Unit (Case Studies A, B)	38	0	0	0	0	0	0	0	0	0	0	0	0
61	Stripping Air to Stretford Unit (Case Study C)	N.D.	0	0	0	N.D.	0	0	0	0	0	0	0	0
63	Fuel Gas to Ball Heater (Case Study C)	59.8	1.09	2.54	22.92	0	0	0.0028	15.95	10.44	6.06	0.40	0.20	0
64	Fuel Gas to Gas Oil Reboiler (Case Study C)	6.4	0.12	0.27	2.45	0	0	0.0003	1.70	1.11	0.65	0.04	0.02	0

(Continued)

TABLE 4.1-2 (cont.)

Stream Number (Table No.)	Stream Description	Mass Flow, 10^3 lb/hr (10^3 ACFM)	Components, 10^3 lb/hr												
			C_4H_{10}	Misc. HC	Naphtha	Gas Oil	Bottoms Oil	COS	CS_2	CH_3SH	H_2O	O_2	NOx lb/hr	SO_2 lb/hr	TPM lb/hr
45	Fuel Gas to Gas Oil Reboiler (Case Studies A, B)	3.9	0	0	0	0	0	0.0019	0	0.0005	0	0	0	0	0
46 (4.2-25)	Fuel Gas to Wellman-Lord (Case Studies A, B)	4.2	0	0	0	0	0	0.0021	0	0.0005	0	0	0	0	0
47	Fuel Gas to Steam Reformer Furnace (Case Studies A, B)	29.3	0	0	0	0	0	0.0143	0	0.0035	0	0	0	0	0
48	Fuel Gas to Delayed Coker (Case Studies A, B)	3.0	0	0	0	0	0	0.0014	0	0.0004	0	0	0	0	0
49	Fuel Gas to Gas Oil Hydrotreater (Case Studies A, B)	1.0	0	0	0	0	0	0.0005	0	0.0001	0	0	0	0	0
50	Fuel Gas to Naphtha Hydrotreater (Case Studies A, B)	0.4	0	0	0	0	0	0.0002	0	0	0	0	0	0	0
51	Fuel Gas to Thermal Incinerator (Case Studies A, B)	N.D.	0	0	0	0	0	N.D.	0	N.D.	0	0	0	0	0
52	Fuel Gas to Utility Boilers (Case Studies A, B)	9.8	0	0	0	0	0	0.0048	0	0.0012	0	0	0	0	0
53	Fuel Gas to Steam Reforming (Case Studies A, B)	40.3	0	0	0	0	0	0.0197	0	0.0048	0	0	0	0	0
56 (4.2-24)	Acid Gas from Amine System (Case Studies A, B)	90.8	0	0	0	0	0	0.060	0	0	0.19	0	0	0	0
57 (4.2-24, 4.2-25)	Tail Gas from Claus Unit (Case Studies A, B)	117.4	0	0	0	0	0	0	0	0	12.75	0	49	580	0
58	Steam from Claus Unit (Case Studies A, B)	38	0	0	0	0	0	0	0	0	38	0	0	0	0
61	Stripping Air to Stretford Unit (Case Study C)	N.D.	0	0	0	0	0	0	0	0	N.D.	N.D.	0	0	0
63	Fuel Gas to Ball Heater (Case Study C)	59.8	0	0	0	0	0	0.0311	0	0.0013	0	0	0	0	0
64	Fuel Gas to Gas Oil Reboiler (Case Study C)	6.4	0	0	0	0	0	0.0033	0	0.0001	0	0	0	0	0

(Continued)

TABLE 4.1-2 (cont.)

Stream Number (Table No.)	Stream Description	Mass Flow, 10^3 lb/hr (10^3 ACFM)	Components, 10^3 lb/hr											
			H_2	CO	CO_2	N_2	NH_3	H_2S	CH_4	C_2H_4	C_2H_6	C_3H_6	C_3H_8	C_4H_8
65	Fuel Gas to Steam Reformer Furnace (Case Study C)	47.1	0.86	2.01	18.09	0	0	0.0022	12.59	8.24	4.78	0.32	0.16	0
66	Fuel Gas to Delayed Coker (Case Study C)	4.9	0.09	0.21	1.88	0	0	0.0002	1.30	0.85	0.49	0.03	0.02	0
67	Fuel Gas to Gas Oil Hydrotreater (Case Study C)	1.6	0.03	0.07	0.61	0	0	0.0001	0.42	0.27	0.16	0.01	0.01	0
68	Fuel Gas to Naphtha Hydrotreater (Case Study C)	0.7	0.01	0.03	0.27	0	0	0	0.19	0.12	0.07	0	0	0
69	Fuel Gas to Thermal Incinerator (Case Study C)	N.D.	N.D.	N.D.	N.D.	0	0	N.D.	N.D.	N.D.	N.D.	N.D.	N.D.	0
70	Fuel Gas to Utility Boilers (Case Study C)	10.7	0.20	0.46	4.10	0	0	0.0005	2.85	1.87	1.08	0.07	0.04	0
71	Fuel Gas to Steam Reforming (Case Study C)	64.5	1.18	2.75	24.80	0	0	0.0030	17.25	11.30	6.56	0.44	0.21	0
72 (4.2-21)	C_3/C_4 Gases - Treated (Case Study C)	64.9	0	0	0	0	0	0.0014	0	0.35	0.20	25.16	12.38	16.24
75	Stretford Oxidizer Vent Gas (Case Study C)	N.D.	0	0	N.D.	N.D.	0	0	0	0	0	0	0	0
79 (4.2-25)	Combustion Air to Wellman-Lord Unit (Case Studies A, B)	85.9	0	0	0	65.47	0	0	0	0	0	0	0	0
82* (4.2-25)	Flue Gas from Wellman-Lord Unit (Case Studies A, B)	204.0	0	0	89.77	90.55	0	0	0	0	0	0	0	0
83 (4.2-24, 4.2-25)	Wellman-Lord Acid Gas Recycle to Claus Unit (Case Studies A, B)	1.7	0	0	0	0	0	0	0	0	0	0	0	0
85	High Pressure Steam from Wellman-Lord Waste Heat Boiler (Case Studies A, B)	N.D.	0	0	0	0	0	0	0	0	0	0	0	0
91* (4.2-22, 4.2-23)	Flue Gas from Steam Reforming Furnace	666.6-685.3	0	0	79.4-97.5	484.3-484.9	0	0	0	0	0	0	0	0

(Continued)

TABLE 4.1-2 (cont.)

Stream Number (Table No.)	Stream Description	Mass Flow, 10^3 lb/hr (10^3 ACFM)	Components, 10^3 lb/hr												
			C_4H_{10}	Misc. HC	Naphtha	Gas Oil	Bottoms Oil	COS	CS_2	CH_3SH	H_2O	O_2	NOx lb/hr	SO_2 lb/hr	TPM lb/hr
65	Fuel Gas to Steam Reformer Furnace (Case Study C)	47.1	0	0	0	0	0	0.0245	0	0.0011	0	0	0	0	0
66	Fuel Gas to Delayed Coker (Case Study C)	4.9	0	0	0	0	0	0.0025	0	0.0001	0	0	0	0	0
67	Fuel Gas to Gas Oil Hydrotreater (Case Study C)	1.6	0	0	0	0	0	0.0008	0	0	0	0	0	0	0
68	Fuel Gas to Naphtha Hydrotreater (Case Study C)	0.7	0	0	0	0	0	0.0004	0	0	0	0	0	0	0
69	Fuel Gas to Thermal Incinerator (Case Study C)	N.D.	0	0	0	0	0	N.D.	0	N.D.	0	0	0	0	0
70	Fuel Gas to Utility Boilers (Case Study C)	10.7	0	0	0	0	0	0.0055	0	0.0002	0	0	0	0	0
71	Fuel Gas to Steam Reforming (Case Study C)	64.5	0	0	0	0	0	0.0335	0	0.0014	0	0	0	0	
72 (4.2-21)	C_3/C_4 Gases - Treated (Case Study C)	64.9	10.52	0	0	0	0	0.0009	0	0.0071	0	0	0	0	0
75	Stretford Oxidizer Vent Gas (Case Study C)	N.D.	0	0	0	0	0	0	0	0	N.D.	0	0	0	0
79 (4.2-25)	Combustion Air to Wellman-Lord Unit (Case Studies A, B)	85.9	0	0	0	0	0	0	0	0	0.54	19.88	0	0	0
82* (4.2-25)	Flue Gas from Wellman-Lord Unit (Case Studies A, B)	204.0	0	0	0	0	0	0	0	0	19.76	3.73	49	139	N.D.
83 (4.2-24, 4.2-25)	Wellman-Lord Acid Gas Recycle to Claus Unit (Case Studies A, B)	1.7	0	0	0	0	0	0	0	0	0.09	0	0	1,604	0
85	High Pressure Steam from Wellman-Lord Waste Heat Boiler (Case Studies A, B)	N.D.	0	0	0	0	0	0	0	0	N.D.	0	0	0	0
91* (4.2-22, 4.2-23)	Flue Gas from Steam Reforming Furnace	666.6-685.3	0	0	0	0	0	0	0	0	62.4	40.4	82.2	27.4-33.0	11.4

(Continued)

TABLE 4.1-2 (cont.)

Stream Number (Table No.)	Stream Description	Mass Flow, 10^3 lb/hr (10^3 ACFM)	Components, 10^3 lb/hr											
			H_2	CO	CO_2	N_2	NH_3	H_2S	CH_4	C_2H_4	C_2H_6	C_3H_6	C_3H_8	C_4H_8
92	Acid Gas Recycle to Oil and Gas Recovery Unit - Steam Reformer	N.D.	0	0	N.D.	0	N.D.	N.D.	0	0	0	0	0	0
95	Hydrogen to Gas Oil Hydrotreater	N.D.	N.D.	0	0	0	0	0	0	0	0	0	0	0
96	Hydrogen to Naphtha Hydrotreater	N.D.	N.D.	0	0	0	0	0	0	0	0	0	0	0
97*	Flue Gas from Steam Reformer Regenerator	242	N.D.	0	108	N.D.	0	0	0	0	0	0	0	0
98	Overhead Gas from Delayed Coker	N.D.	N.D.	N.D.	N.D.	N.D.	N.D.	N.D.	N.D.	N.D.	N.D.	N.D.	N.D.	N.D.
104* (4.2-22, 4.2-23)	Flue Gas from Delayed Coker	68.8-70.9	0	0	8.2-10.1	50.0-50.1	0	0	0	0	0	0	0	0
106	Overhead Gas from Gas Oil Hydrotreater	N.D.	N.D.	N.D.	N.D.	N.D.	N.D.	N.D.	N.D.	N.D.	N.D.	N.D.	N.D.	N.D.
118* (4.2-22, 4.2-23)	Flue Gas from Gas Oil Feed Furnace	22.3-23.0	0	0	2.7-3.3	16.1-16.2	0	0	0	0	0	0	0	0
119* (4.2-22, 4.2-23)	Flue Gas from Gas Oil Reboiler Furnace	90.0-92.6	0	0	10.7-13.2	65.4-65.5	0	0	0	0	0	0	0	0
121	Overhead Gas from Naphtha Hydrotreater	N.D.	N.D.	N.D.	N.D.	N.D.	N.D.	N.D.	N.D.	N.D.	N.D.	N.D.	N.D.	N.D.
125* (4.2-22, 4.2-23)	Flue Gas from Naphtha Hydrotreater	10.0-10.3	0	0	1.2-1.5	7.3	0	0	0	0	0	0	0	0
128 (4.2-19, 4.2-24, 4.2-30, 4.2-31)	Overhead Vapors from Ammonia Recovery Unit	8.6-10.6	0	0	0.0-0.935	0	0.056-0.060	5.335-5.816	0.0-0.431	0	0	0	0	0
135	Oxygen to Bio-oxidation Unit (Case Study B)	1.0	0	0	0	0	0	0	0	0	0	0	0	0

(Continued)

TABLE 4.1-2 (cont.)

Stream Number (Table No.)	Stream Description	Mass Flow, 10^3 lb/hr (10^3 ACFM)	Components, 10^3 lb/hr												
			C_4H_{10}	Misc. HC	Naphtha	Gas Oil	Bottoms Oil	COS	CS_2	CH_3SH	H_2O	O_2	NOx lb/hr	SO_2 lb/hr	TPM lb/hr
92	Acid Gas Recycle to Oil and Gas Recovery Unit - Steam Reformer	N.D.	0	0	0	0	0	N.D.	N.D.	N.D.	N.D.	0	N.D.	N.D.	0
95	Hydrogen to Gas Oil Hydrotreater	N.D.	0	0	0	0	0	0	0	0	0	0	0	0	0
96	Hydrogen to Naphtha Hydrotreater	N.D.	0	0	0	0	0	0	0	0	0	0	0	0	0
97*	Flue Gas from Steam Reformer Regenerator	242	0	0	0	0	0	0	0	0	134	N.D.	0	N.D.	N.D.
98	Overhead Gas from Delayed Coker	N.D.	N.D.	N.D.	N.D.	N.D.	N.D.	N.D.	N.D.	N.D.	N.D.	N.D.	N.D.	N.D.	N.D.
104* (4.2-22, 4.2-23)	Flue Gas from Delayed Coker	68.8-70.9	0	0	0	0	0	0	0	0	6.4-6.5	4.2	8.4	2.8-3.4	1.2
106	Overhead Gas from Gas Oil Hydrotreater	N.D.	N.D.	N.D.	N.D.	N.D.	N.D.	N.D.	N.D.	N.D.	N.D.	N.D.	N.D.	N.D.	N.D.
118* (4.2-22, 4.2-23)	Flue Gas from Gas Oil Feed Furnace	22.3-23.0	0	0	0	0	0	0	0	0	2.1	1.4	2.7	0.9-1.1	0.4
119* (4.2-22, 4.2-23)	Flue Gas from Gas Oil Reboiler Furnace	90.0-92.6	0	0	0	0	0	0	0	0	8.4	5.5	11.2	3.8-4.5	1.6
121	Overhead Gas from Naphtha Hydrotreater	N.D.	N.D.	N.D.	N.D.	N.D.	N.D.	N.D.	N.D.	N.D.	N.D.	N.D.	N.D.	N.D.	N.D.
125* (4.2-22, 4.2-23)	Flue Gas from Naphtha Hydrotreater	10.0-10.3	0	0	0	0	0	0	0	0	0.9	0.6	1.3	0.4-0.5	0.2
128 (4.2-19, 4.2-24, 4.2-30, 4.2-31)	Overhead Vapors from Ammonia Recovery Unit	8.6-10.6	0	0	0	0	0	0	0	0	3.17-3.36	0	0	0	0
135	Oxygen to Bio-oxidation Unit (Case Study B)	1.0	0	0	0	0	0	0	0	0	0	1.0	0	0	0

(Continued)

TABLE 4.1-2 (cont.)

Stream Number (Table No.)	Stream Description	Mass Flow, 10^3 lb/hr (10^3 ACFM)	Components, 10^3 lb/hr											
			H_2	CO	CO_2	N_2	NH_3	H_2S	CH_4	C_2H_4	C_2H_6	C_3H_6	C_3H_8	C_4H_8
138*	Diesel Emission - Disposal Equipment	N.D.	N.D.	0.023	N.D.	N.D.	N.D.	N.D.	N.D.	N.D.	N.D.	N.D.	N.D.	N.D.
139*	Fugitive Dust - Disposal (included in stream 8)	N.D.	0	0	0	0	0	0	0	0	0	0	0	0
159	Steam to Oil and Gas Recovery Unit	32.5	0	0	0	0	0	0	0	0	0	0	0	0
160	Steam to DEA Unit (Case Studies A, B) (stream 162 included)	121	0	0	0	0	0	0	0	0	0	0	0	0
161	Steam to Stretford Unit (Case Study C)	19	0	0	0	0	0	0	0	0	0	0	0	0
162	Steam to Wellman-Lord Unit (Case Studies A, B) (included in stream 160)	N.D.	0	0	0	0	0	0	0	0	0	0	0	0
163	Steam to Steam Reformer	224	0	0	0	0	0	0	0	0	0	0	0	0
164	Steam to Delayed Coker	N.D.	0	0	0	0	0	0	0	0	0	0	0	0
165	Steam to Delayed Coker Drums	36	0	0	0	0	0	0	0	0	0	0	0	0
166	Steam to Ammonia Recovery Unit	156	0	0	0	0	0	0	0	0	0	0	0	0
167	Total Plant Steam	821	0	0	0	0	0	0	0	0	0	0	0	0
173*	Cooling Tower Evaporation (Case Studies A, B)	758	0	0	0	0	0	0	0	0	0	0	0	0
174*	Cooling Tower Evaporation (Case Study C)	815	0	0	0	0	0	0	0	0	0	0	0	0
179* (4.2-22, 4.2-23)	Flue Gas from Utility Boilers	155.3-222.2	0	0	22.1-26.5	109.9-161.4	0	0	0	0	0	0	0	0

(Continued)

TABLE 4.1-2 (cont.)

Stream Number (Table No.)	Stream Description	Mass Flow, 10^3 lb/hr (10^3 ACFM)	Components, 10^3 lb/hr												
			C_4H_{10}	Misc. HC	Naphtha	Gas Oil	Bottoms Oil	COS	CS_2	CH_3SH	H_2O	O_2	NOx lb/hr	SO_2 lb/hr	TPM lb/hr
138*	Diesel Emission - Disposal Equipment	N.D.	N.D.	0.0077	N.D.	0	0	0	N.D.	N.D.	N.D.	N.D.	267.9	20.0	19.0
139*	Fugitive Dust - Disposal (included in stream 8)	N.D.	0	0	0	0	0	0	0	0	0	0	0	0	N.D.
159	Steam to Oil and Gas Recovery Unit	32.5	0	0	0	0	0	0	0	0	32.5	0	0	0	0
160	Steam to DEA Unit (Case Studies A, B) (stream 162 included)	121	0	0	0	0	0	0	0	0	121	0	0	0	0
161	Steam to Stretford Unit (Case Study C)	19	0	0	0	0	0	0	0	0	19	0	0	0	0
162	Steam to Wellman-Lord Unit (Case Studies A, B) (included in stream 160)	N.D.	0	0	0	0	0	0	0	0	N.D.	0	0	0	0
163	Steam to Steam Reformer	224	0	0	0	0	0	0	0	0	224	0	0	0	0
164	Steam to Delayed Coker	N.D.	0	0	0	0	0	0	0	0	N.D.	0	0	0	0
165	Steam to Delayed Coker Drums	36	0	0	0	0	0	0	0	0	36.0	0	0	0	0
166	Steam to Ammonia Recovery Unit	156	0	0	0	0	0	0	0	0	156	0	0	0	0
167	Total Plant Steam	821	0	0	0	0	0	0	0	0	821	0	0	0	0
173*	Cooling Tower Evaporation (Case Studies A, B)	758	0	0	0	0	0	0	0	0	758	0	0	0	0
174*	Cooling Tower Evaporation (Case Study C)	815	0	0	0	0	0	0	0	0	815.0	0	0	0	0
179* (4.2-22, 4.2-23)	Flue Gas from Utility Boilers	155.3-222.2	0	0	0	0	0	0	0	0	14.1-20.8	9.2-13.5	21.6	7.2-7.5	2.9

* Indicates streams that come into contact with the environment.

**0 = Estimated to be insignificant (less than 1 lb); N.D. = Not determined.

Source: DRI estimates based on information from Colony Development Operation, 1974 and 1977.

TABLE 4.1-3. INVENTORY OF LIQUID STREAMS

Stream Number (Table No.)	Description of Stream	Mass Flow, gpm (10^3 lb/hr)	Components of Concern	Mass Flow of Component, lb/hr	Remarks[a]
12* (4.2-5)	Raw Shale Runoff and Leachate	N.D.[b]	N.D.	N.D.	A catchment basin is used for collecting runoff and leachate, which are used in processed shale moisturizing.
21*	Raw Shale Sludge from Preheat System	(143.4)	Organics (total) Leachable Salts	N.D. N.D.	The sludge is approximately a 50-50 mixture of raw shale dust and water, and it may contain absorbed sulfur compounds. It is disposed of with the processed shale.
22*	Processed Shale Sludge from Ball Elutriator	(10.8)	Organics (total) Leachable Salts	N.D. N.D.	The sludge is a 50-50 mixture of processed shale dust and water, and it may contain absorbed sulfur compounds. It is disposed of with the processed shale.
23*	Processed Shale Sludge from Moisturizer	(7.2)	Organics (total)	N.D.	See stream 22.
29 (4.2-26, 4.2-27, 4.2-28)	Foul Water from Pyrolysis Fractionator	426 (216.2)	CO_2 NH_3 H_2S TDS & TSS Organics (total)	935 770 99 7.0 1,078	Moisture in the retort vapors is condensed to form the foul water. Most of the ammonia in the gas is dissolved in the water.
30	Foul Water from Retort Gas Compressor	N.D.	NH_3 H_2S Organics (total)	N.D. N.D. N.D.	Compression of the retort gas before fractionation knocks out additional moisture which is combined with the bulk of the foul water.
31 (4.2-28, 4.2-29)	Total Foul Water Feed to Stripper	498 (252.6)	CO_2 NH_3 H_2S Organics (total)	935 770 485 1,078	Additional condensate from the coker unit is combined with the foul water.
38* (4.2-29, 4.2-32)	Stripped Foul Water	468 (234.5)	NH_3 H_2S Organics (total)	48 1 540	The foul water composite is steam stripped to remove volatile matter. Most of the NH_3 and H_2S, and 50% of the organics, are removed upon stripping.
39	Steam Condensate from Oil and Gas Recovery System	N.D.	--[c]	--	Steam is raised from clarified river water. The condensate should be fairly clean.

(Continued)

TABLE 4.1-3 (cont.)

Stream Number (Table No.)	Description of Stream	Mass Flow, gpm (10^3 lb/hr)	Components of Concern	Mass Flow of Component, lb/hr	Remarks[a]
40 (4.2-12)	Stabilized Raw Naphtha from Oil and Gas Recovery System	(106)	Organic - Nitrogen - Sulfur	 420 740	The raw naphtha is stabilized by removing high vapor pressure gases and liquids. Organic nitrogen and sulfur would need to be reduced before burning the naphtha as plant fuel.
41 (4.2-12)	Gas Oil from Pyrolysis Fractionator	(450)	Organic - Nitrogen - Sulfur	 9,000 3,600	Organic nitrogen and sulfur would need to be reduced prior to using the gas oil as plant fuel.
42 (4.2-12)	Bottoms Oil from Pyrolysis Fractionator	(189)	Organic - Nitrogen - Sulfur	 5,500 1,300	This is a residual oil with a very high boiling point. It would need to be cracked to produce more useful products.
54	LPG Product (Case Studies A, B)	(37.5)	--	--	The stream has already been treated to remove the sulfur and nitrogen.
55	C_4 Liquid (Case Studies A, B)	(26.8)	--	--	This is clean fuel that is used in the incinerators of the preheat system.
59	Steam Condensate from Claus Unit (Case Studies A, B)	242	--	--	The condensate is essentially pure water and is recycled to the boiler. Includes stream 84.
60 (4.2-14)	Sulfur Product from Claus Unit (Case Studies A, B)	(16.5)	--	--	High quality (+99%) sulfur is produced by the Claus process.
73	LPG Product (Case Study C)	(37.5)	--	--	The stream has already been treated to remove the organic sulfur.
74	C_4 Liquid (Case Study C)	(26.8)	--	--	See stream 55.
76*	Stretford Spent Liquor (Case Study C)	N.D.	N.D.	N.D.	The spent liquor is shipped off site for disposal or reclaiming useful chemicals.
77 (4.2-14)	Sulfur Product from Stretford Unit (Case Study C)	(17.5)	--	--	Stretford sulfur is reported to have +99.9% purity.
78	Steam Condensate from Stretford Unit (Case Study C)	38	--	--	The condensate is returned to the boilers as boiler feedwater.

(Continued)

TABLE 4.1-3 (cont.)

Stream Number (Table No.)	Description of Stream	Mass Flow, gpm (10^3 lb/hr)	Components of Concern	Mass Flow of Component, lb/hr	Remarks[a]
80	Caustic to Wellman-Lord (Case Studies A, B)	N.D.	--	--	Sodium hydroxide is used to neutralize the acidic condensate from the compressed gas cooler in the Wellman-Lord unit.
84	Steam Condensate from Wellman-Lord Unit (Case Studies A, B)	N.D.	--	--	Included in stream 59.
86* (4.2-25)	Wellman-Lord Condensate (Case Studies A, B)	44 (22.1)	H_2S SO_2	N.D. N.D.	Moisture in the Wellman-Lord incinerator gas is knocked out upon compression. The condensate may contain sulfuric acid; it is neutralized with caustic before disposition.
93	Steam Condensate from Steam Reformer	N.D.	--	--	See stream 78.
99 (4.2-28)	Foul Water from Delayed Coker	72 (36.4)	H_2S	386	The steam used for stripping volatile matter in the coke is condensed as foul water and combined with the foul water from the retort gas.
100	Naphtha Oil from Delayed Coker	(90)	Organic - Nitrogen - Sulfur	 N.D. N.D.	The bottoms oil is cracked to produce naphtha and gas oil. Individual quantities of these fractions are not known. The quantity given is for combined naphtha from different upgrading operations. Includes stream 107.
101	Gas Oil from Delayed Coker	N.D.	Organic - Nitrogen - Sulfur	 N.D. N.D.	See stream 100.
102	Steam Condensate from Delayed Coker	N.D.	--	--	See stream 78.
107	Naphtha Oil from Gas Oil Hydrotreater	N.D.	Organic - Nitrogen - Sulfur	 N.D. N.D.	Hydrotreated gas oil is fractionated to produce some naphtha oil. Organic nitrogen and sulfur should be essentially removed during hydrotreating. Included in stream 100.
108 (4.2-14)	Diesel Fuel Product from Gas Oil Hydrotreater	(6)	--	--	The fuel is fractionated from hydrotreated gas oil and used in the diesel-powered equipment.

(Continued)

TABLE 4.1-3 (cont.)

Stream Number (Table No.)	Description of Stream	Mass Flow, gpm (10^3 lb/hr)	Components of Concern	Mass Flow of Component, lb/hr	Remarks[a]
110 (4.2-30, 4.2-31)	Sour Water from Gas Oil Hydrotreater	510 (271.7)	NH_3 H_2S	11,280 5,340	Sour water from the naphtha hydrotreater (stream 124) is included. The ammonia and hydrogen sulfide quantities are also total. Ammonia is recovered by an ammonia recovery process.
111	Gas Oil to Thermal Oxidizer (Case Studies A, B)	(5.7)	Organic - Nitrogen - Sulfur	 114 46	Crude gas oil before upgrading is used as fuel.
112	Gas Oil to Thermal Oxidizer (Case Study C)	(5.7)	Organic - Nitrogen - Sulfur	 114 46	See stream 111.
113	Gas Oil to Ball Heater (Case Studies A, B)	(53.1)	Organic - Nitrogen - Sulfur	 1,142 457	See stream 111.
114	Gas Oil to Ball Heater (Case Study C)	(44.7)	Organic - Nitrogen - Sulfur	 894 358	See stream 111.
115	Gas Oil to Steam Superheater	(7.0)	Organic - Nitrogen - Sulfur	 140 56	See stream 111.
116	Treated Gas Oil Recycle to Naphtha Hydrotreater	N.D.	--	--	Internal recycling of streams to the naphtha hydrogenation unit and used as a sponge oil for naphtha collection.
117 (4.2-13)	Net Upgraded Gas Oil Product	(336)	--	--	Low-sulfur, low-nitrogen, hydrotreated gas oil is sent for blending with hydrotreated naphtha to yield the final oil product.
123 (4.2-13)	Naphtha Product	(230)	--	--	The naphtha is blended with treated gas oil.
124 (4.2-30, 4.2-31)	Sour Water from Naphtha Hydrotreater	N.D.	NH_3 H_2S	N.D. N.D.	Included in stream 110.
126	Caustic to Ammonia Recovery Unit	(0.6)	--	--	This is added to make up the reagent losses.
127	Phosphoric Acid to Ammonia Recovery Unit	(0.02)	--	--	See stream 126.

(Continued)

TABLE 4.1-3 (cont.)

Stream Number (Table No.)	Description of Stream	Mass Flow, gpm (10^3 lb/hr)	Components of Concern	Mass Flow of Component, lb/hr	Remarks[a]
129 (4.2-14)	Anhydrous Ammonia Product	(11)	NH_3 vapors	N.D.	Refrigerated storage is used to minimize fugitive ammonia vapors.
130	Steam Condensate from Ammonia Recovery Unit	292	--	--	See stream 78.
131 (4.2-30, 4.2-31)	Stripped Sour Water to Gas Oil Hydrotreater	485 (242.7)	NH_3 H_2S Organics (total)	15.5 4.6 N.D.	The water is recycled back as wash water to the gas oil and naphtha hydrotreaters. Flow rates to each unit not determined. Includes stream 132.
132 (4.2-30, 4.2-31)	Stripped Sour Water to Naphtha Hydrotreater	N.D.	NH_3 H_2S Organics (total)	N.D. N.D. N.D.	Included in stream 131.
133* (4.2-30, 4.2-31)	Stripped Sour Water Purge Stream	19 (9.5)	NH_3 H_2S Organics (total)	1.6 0.5 N.D.	Excess water formed during hydrotreating is used in processed shale moisturizing.
136* (4.2-32)	Bio-treated Foul Water (Case Study B)	460 (230.7)	NH_3 H_2S Organics (total) - BOD	N.D. N.D. 296 (69)	Approximately 90% of BOD (45% of TOC) is removed by bio-oxidation. The treated water is used in processed shale moisturizing.
137*	Bio-oxidation sludge (Case Study B)	6 (3.7)	NH_3 H_2S Organics (total) - BOD	N.D. N.D. N.D. N.D.	This sludge is discarded with the processed shale.
140*	River Water	5,798-5,884	--	--	Source water from the Colorado River is clarified and supplied to different processing and utility needs.
141	Cooling Water to Oil and Gas Recovery Unit	1,500	--	--	Clarified source water is used.
142	Cooling Water to Stretford Unit (Case Study C)	116	--	--	See stream 141.
143	Cooling Water to Wellman-Lord Unit (Case Studies A, B)	5,760	--	--	See stream 141.
144	Cooling Water to Steam Reformer	N.D.	--	--	See stream 141.
145	Cooling Water to Delayed Coker	N.D.	--	--	See stream 141.

(Continued)

TABLE 4.1-3 (cont.)

Stream Number (Table No.)	Description of Stream	Mass Flow, gpm (10^3 lb/hr)	Components of Concern	Mass Flow of Component, lb/hr	Remarks[a]
146	Cooling Water to Ammonia Recovery Unit	6,900	--	--	See stream 141.
147*	Potable and Sanitary Water	20	--	--	See stream 141.
148*	Revegetation Water	370	--	--	See stream 141.
149*	Dust Suppression Water	876	--	--	See stream 141.
150*	Service and Fire Water	36	--	--	See stream 141.
151	Process Makeup Water to Stretford (Case Study C)	65	--	--	See stream 141.
152	Process Makeup Water to Wellman-Lord (Case Studies A, B)	2	--	--	See stream 141.
153	Boiler Feedwater to Steam Superheater	300	--	--	Primarily clarified source water is used. Included in stream 157.
154	Boiler Feedwater to Processed Shale Cooler	90	--	--	Clarified source water is used. Quantity of feedwater is included in stream 157.
155	Boiler Feedwater to Claus Unit (Case Studies A, B)	76	--	--	Steam is produced by recovering the heat of H_2S combustion. Included in stream 157.
156	Boiler Feedwater to Wellman-Lord Unit (Case Studies A, B)	N.D.	--	--	Waste heat is recovered from the Claus tail gas incineration. Included in stream 157.
157	Boiler Feedwater to Utility Boilers	1,522	--	--	This includes the boiler feedwater makeup to all steam producing units (streams 153, 154, 155 and 156).
158*	Processed Shale Moistening Water	1,639	--	--	Various used waters are combined to provide processed shale moisturizing needs.
168*	Boiler Blowdown	280	--	--	Salts from the clarified river water are concentrated in the blowdown, which is used in processed shale moisturizing.
169*	Boiler Feedwater Treatment Concentrate	122	--	--	The boiler feedwater softener sludge is mixed with other water and used in processed shale moisturizing.

(Continued)

TABLE 4.1-3 (cont.)

Stream Number (Table No.)	Description of Stream	Mass Flow, gpm (10^3 lb/hr)	Components of Concern	Mass Flow of Component, lb/hr	Remarks[a]
170*	Cooling Tower Drift (Case Studies A, B)	15	--	--	Treated river water is used in the cooling tower. The drift is essentially pure water.
171*	Cooling Tower Drift (Case Study C)	16	--	--	See stream 170.
172	Total Cooling Water	3,060-3,292	--	--	See stream 141.
175*	Cooling Tower Blowdown (Case Studies A, B)	1,530	N.D.	N.D.	The blowdown is placed in the equalization pond for eventual use in processed shale moisturizing.
176*	Cooling Tower Blowdown (Case Study C)	1,646	N.D.	N.D.	See stream 175.
177*	Storm Runoff	110	N.D.	N.D.	The runoff is collected in a catchment basin and used in processed shale moisturizing. Includes stream 178.
178* (4.2-9, 4.2-10, 4.2-11)	Processed Shale Leachate	N.D.	Dissolved Salts Organics	N.D. N.D.	Included in stream 177.

* Indicates streams that come into contact with the environment.

[a] The remarks indicate the stream disposition. The controls and treatments applied to the streams are those specified by Colony.

[b] N.D. = Not determined.

[c] Dashes (--) indicate no known components of concern.

Source: DRI estimates based on information from Colony Development Operation, 1974.

TABLE 4.1-4. COMPOSITIONS OF LIQUID STREAMS

Stream Number (Table No.)	Stream Description	Mass Flow, gpm (10^3 lb/hr)	Components, lb/hr					
			CO_2	NH_3	H_2S	TDS & TSS	Organics	H_2O
12* (4.2-5)	Raw Shale Runoff and Leachate	N.D.**	0**	0	0	N.D.	N.D.	N.D.
21*	Raw Shale Sludge from Preheat System	(143.4)	0	0	0	71,700	N.D.	71,700
22*	Processed Shale Sludge from Ball Elutriator	(10.8)	0	0	0	5,400	N.D.	5,400
23*	Processed Shale Sludge from Moisturizer	(7.2)	0	0	0	3,600	N.D.	3,600
29 (4.2-26, 4.2-27, 4.2-28)	Foul Water from Pyrolysis Fractionator	426 (216.2)	935	770	99	7.0	1,078	213,300
30	Foul Water from Retort Gas Compressor	N.D.	N.D.	N.D.	N.D.	N.D.	N.D.	N.D.
31 (4.2-28, 4.2-29)	Total Foul Water Feed to Stripper	498 (252.6)	935	770	485	N.D.	1,078	249,350
38* (4.2-29, 4.2-32)	Stripped Foul Water	468 (234.5)	N.D.	48	1	6.2	540	233,915
39	Steam Condensate from Oil and Gas Recovery System	N.D.	0	0	0	0	0	N.D.
40 (4.2-12)	Stabilized Raw Naphtha from Oil and Gas Recovery System	(106)	0	0	N.D.	N.D.	106,000	N.D.
41 (4.2-12)	Gas Oil from Pyrolysis Fractionator	(450)	0	0	0	0	450,000	0
42 (4.2-12)	Bottoms Oil from Pyrolysis Fractionator	(189)	0	0	0	0	189,000	0
54	LPG Product (Case Studies A, B)	(37.5)	0	0	0	0	37,500	0
55	C_4 Liquid (Case Studies A, B)	(26.8)	0	0	0	0	26,800	0

(Continued)

TABLE 4.1-4 (cont.)

Stream Number (Table No.)	Stream Description	Mass Flow, gpm (10^3 lb/hr)	Components, lb/hr					
			CO_2	NH_3	H_2S	TDS & TSS	Organics	H_2O
59	Steam Condensate from Claus Unit (Case Studies A, B) (stream 84 included)	242	0	0	0	0	0	121,000
60 (4.2-14)	Sulfur Product from Claus Unit (Case Studies A, B)	(16.5)	0	0	0	0	0	0
73	LPG Product (Case Study C)	(37.5)	0	0	0	0	37,500	0
74	C_4 Liquid (Case Study C)	(26.8)	0	0	0	0	26,800	0
76*	Stretford Spent Liquor (Case Study C)	N.D.	N.D.	N.D.	N.D.	0	0	N.D.
77 (4.2-14)	Sulfur Product from Stretford Unit (Case Study C)	(17.5)	0	0	0	0	0	0
78	Steam Condensate from Stretford Unit (Case Study C)	38	0	0	0	0	0	19,000
80	Caustic to Wellman-Lord (Case Studies A, B)	N.D.	0	0	0	N.D.	0	N.D.
84	Steam Condensate from Wellman-Lord Unit (Case Studies A, B) (included in stream 59)	N.D.	0	0	0	0	0	N.D.
86* (4.2-25)	Wellman-Lord Condensate (Case Studies A, B)	44 (22.1)	N.D.	N.D.	N.D.	N.D.	N.D.	22,098
93	Steam Condensate from Steam Reformer	N.D.	0	0	0	0	0	N.D.
99 (4.2-28)	Foul Water from Delayed Coker	72 (36.4)	N.D.	0	386	N.D.	N.D.	36,050
100	Naphtha Oil from Delayed Coker (stream 107 included)	(90)	0	0	0	0	90,000	0
101	Gas Oil from Delayed Coker	N.D.	0	0	0	0	N.D.	0
102	Steam Condensate from Delayed Coker	N.D.	0	0	0	0	0	N.D.

(Continued)

TABLE 4.1-4 (cont.)

Stream Number (Table No.)	Stream Description	Mass Flow, gpm (10^3 lb/hr)	Components, lb/hr					
			CO_2	NH_3	H_2S	TDS & TSS	Organics	H_2O
107	Naphtha Oil from Gas Oil Hydrotreater (included in stream 100)	N.D.	0	0	0	0	N.D.	0
108 (4.2-14)	Diesel Fuel Product from Gas Oil Hydrotreater	(6)	0	0	0	0	6,000	0
110 (4.2-30, 4.2-31)	Sour Water from Gas Oil Hydrotreater (stream 124 included)	510 (271.7)	N.D.	11,280	5,340	N.D.	N.D.	255,120
111	Gas Oil to Thermal Oxidizer (Case Studies A, B)	(5.7)	0	0	0	0	5,670	0
112	Gas Oil to Thermal Oxidizer (Case Study C)	(5.7)	0	0	0	0	5,670	0
113	Gas Oil to Ball Heater (Case Studies A, B)	(53.1)	0	0	0	0	53,100	0
114	Gas Oil to Ball Heater (Case Study C)	(44.7)	0	0	0	0	44,700	0
115	Gas Oil to Steam Superheater	(7.0)	0	0	0	0	7,000	0
116	Treated Gas Oil Recycle to Naphtha Hydrotreater	N.D.	0	0	0	0	N.D.	0
117 (4.2-13)	Net Upgraded Gas Oil Product	(336)	0	0	0	0	336,000	0
123 (4.2-13)	Naphtha Product	(230)	0	0	0	0	230,000	0
124 (4.2-30, 4.2-31)	Sour Water from Naphtha Hydrotreater (included in stream 110)	N.D.	N.D.	N.D.	N.D.	N.D.	N.D.	N.D.
126	Caustic to Ammonia Recovery Unit	(0.6)	0	0	0	120	0	480
127	Phosphoric Acid to Ammonia Recovery Unit	(0.02)	0	0	0	N.D.	0	N.D.
129 (4.2-14)	Anhydrous Ammonia Product	(11)	0	11,000	0	0	0	0

(Continued)

TABLE 4.1-4 (cont.)

Stream Number (Table No.)	Stream Description	Mass Flow, gpm (10^3 lb/hr)	Components, lb/hr					
			CO_2	NH_3	H_2S	TDS & TSS	Organics	H_2O
130	Steam Condensate from Ammonia Recovery Unit	292	0	0	0	0	0	146,000
131 (4.2-30, 4.2-31)	Stripped Sour Water to Gas Oil Hydrotreater (stream 132 included)	485 (242.7)	N.D.	15.5	4.6	N.D.	N.D.	242,674
132 (4.2-30, 4.2-31)	Stripped Sour Water to Naphtha Hydrotreater (included in stream 131)	N.D.	N.D.	N.D.	N.D.	N.D.	N.D.	N.D.
133* (4.2-30, 4.2-31)	Stripped Sour Water Purge Stream	19 (9.5)	N.D.	1.6	0.5	N.D.	N.D.	9,450
136* (4.2-32)	Bio-treated Foul Water (Case Study B)	460 (230.7)	N.D.	N.D.	N.D.	N.D.	296	230,428
137*	Bio-oxidation Sludge (Case Study B)	6 (3.7)	N.D.	N.D.	N.D.	N.D.	N.D.	N.D.
140*	River Water	5,798-5,884	N.D.	0	0	N.D.	N.D.	2,899,000-2,942,000
141	Cooling Water to Oil and Gas Recovery Unit	1,500	N.D.	0	0	N.D.	N.D.	750,000
142	Cooling Water to Stretford Unit (Case Study C)	116	N.D.	0	0	N.D.	N.D.	58,000
143	Cooling Water to Wellman-Lord Unit (Case Studies A, B)	5,760	N.D.	0	0	N.D.	N.D.	2,880,000
144	Cooling Water to Steam Reformer	N.D.	N.D.	0	0	N.D.	N.D.	N.D.
145	Cooling Water to Delayed Coker	N.D.	N.D.	0	0	N.D.	N.D.	N.D.
146	Cooling Water to Ammonia Recovery Unit	6,900	N.D.	0	0	N.D.	N.D.	3,450,000
147*	Potable and Sanitary Water	20	N.D.	0	0	N.D.	N.D.	10,000
148*	Revegetation Water	370	N.D.	0	0	N.D.	N.D.	185,000
149*	Dust Suppression Water	876	N.D.	0	0	N.D.	N.D.	438,000

(Continued)

TABLE 4.1-4 (cont.)

Stream Number (Table No.)	Stream Description	Mass Flow, gpm (10^3 lb/hr)	Components, lb/hr					
			CO_2	NH_3	H_2S	TDS & TSS	Organics	H_2O
150*	Service and Fire Water	36	N.D.	0	0	N.D.	N.D.	18,000
151	Process Makeup Water to Stretford (Case Study C)	65	N.D.	0	0	N.D.	N.D.	32,500
152	Process Makeup Water to Wellman-Lord (Case Studies A, B)	2	N.D.	0	0	N.D.	N.D.	1,000
153	Boiler Feedwater to Steam Superheater (included in stream 157)	300	N.D.	0	0	N.D.	N.D.	150,000
154	Boiler Feedwater to Processed Shale Cooler (included in stream 157)	90	N.D.	0	0	N.D.	N.D.	45,000
155	Boiler Feedwater to Claus Unit (Case Studies A, B) (included in stream 157)	76	N.D.	0	0	N.D.	N.D.	38,000
156	Boiler Feedwater to Wellman-Lord Unit (Case Studies A, B) (included in stream 157)	N.D.	N.D.	0	0	N.D.	N.D.	N.D.
157	Boiler Feedwater to Utility Boilers (streams 153, 154, 155 and 156 included)	1,522	N.D.	0	0	N.D.	N.D.	761,000
158*	Processed Shale Moistening Water	1,639	N.D.	0	0	N.D.	N.D.	820,000
168*	Boiler Blowdown	280	N.D.	0	0	N.D.	N.D.	140,000
169*	Boiler Feedwater Treatment Concentrate	122	N.D.	N.D.	N.D.	N.D.	N.D.	61,000
170*	Cooling Tower Drift (Case Studies A, B)	15	N.D.	0	0	N.D.	N.D.	7,500
171*	Cooling Tower Drift (Case Study C)	16	N.D.	0	0	N.D.	N.D.	8,000
172	Total Cooling Water	3,060-3,292	N.D.	0	0	N.D.	N.D.	1,530,000-1,646,000

(Continued)

TABLE 4.1-4 (cont.)

Stream Number (Table No.)	Stream Description	Mass Flow, gpm (10^3 lb/hr)	Components, lb/hr					
			CO_2	NH_3	H_2S	TDS & TSS	Organics	H_2O
175*	Cooling Tower Blowdown (Case Studies A, B)	1,530	N.D.	0	0	N.D.	N.D.	765,000
176*	Cooling Tower Blowdown (Case Study C)	1,646	N.D.	0	0	N.D.	N.D.	823,000
177*	Storm Runoff (stream 178 included)	110	N.D.	N.D.	N.D.	N.D.	N.D.	55,000
178* (4.2-9, 4.2-10, 4.2-11)	Processed Shale Leachate (included in stream 177)	N.D.	N.D.	N.D.	N.D.	N.D.	N.D.	N.D.

* Indicates streams that come into contact with the environment.

**N.D. = Not determined; 0 = Estimated to be insignificant (less than 1 lb).

Source: DRI estimates based on information from Colony Development Operation, 1974.

TABLE 4.1-5. INVENTORY OF SOLID STREAMS

Stream Number (Table No.)	Description of Stream	Mass Flow, 10^3 lb/hr (lb/hr)	Components of Concern	Mass Flow of Component, lb/hr	Remarks[a]
1* (4.2-2, 4.2-3, 4.2-4)	Raw Shale Feed	5,481.7	Particulates	18,300	Dust collection and suppression are employed to minimize the particulate emissions from raw shale handling operations.
9*	Baghouse Dusts	18.3	--[b]	--	This dust is collected from raw shale handling operations and combined with the raw shale for retorting.
27* (4.2-6, 4.2-7, 4.2-8)	Processed Shale	5,170	Particulates Leachable Salts	N.D.[c] N.D.	The processed shale is properly moisturized to reduce dust emissions. Proper compaction should reduce water permeability, hence leaching of salts.
62	Makeup Chemicals to Stretford Unit (Case Study C)	0.67	--	--	Holmes-Stretford mix and soda ash.
81	Makeup Na_2SO_3 to Wellman-Lord (Case Studies A, B)	1.7	--	--	Makeup stream to compensate for the chemical losses.
87	Makeup HDS Catalyst to Steam Reformer	(7.7)	--	--	Makeup stream to compensate for spent catalyst.
88	Makeup ZnO Catalyst to Steam Reformer	(1.6)	--	--	See stream 87.
89	Makeup Fe-Cr Catalyst to Steam Reformer	(2.3)	--	--	See stream 87.
90	Makeup Cu-Zn Catalyst to Steam Reformer	(3.7)	--	--	See stream 87.
94*	Spent Catalysts from Steam Reformer	(15.3)	--	--	Reclaiming is not planned; catalysts sent for disposal.
103* (4.2-14)	Coke	66.7	--	--	A commercial market is not established at present. It is disposed of along with the processed shale.
105	Makeup HDN Catalyst to Gas Oil Hydrotreater	(0-30)	--	--	See stream 87.
109*	Spent Catalysts from Gas Oil Hydrotreater	(0-30)	--	--	See stream 94.

(Continued)

TABLE 4.1-5 (cont.)

Stream Number (Table No.)	Description of Stream	Mass Flow, 10^3 lb/hr (lb/hr)	Components of Concern	Mass Flow of Component, lb/hr	Remarks[a]
120	Makeup HDN Catalyst to Naphtha Hydrotreater	(0-17.1)	--	--	See stream 87.
122*	Spent Catalysts from Naphtha Hydrotreater	(0-17.1)	--	--	See stream 94.
134	Phosphorus to Bio-oxidation Unit (Case Study B)	(10)	--	--	Needed as a nutrient for bio-oxidation.

* Indicates streams that come into contact with the environment.

[a] The remarks indicate the stream disposition. The controls and treatments applied to the streams are those specified by Colony.

[b] Dashes (--) indicate no known components of concern.

[c] N.D. = Not determined.

Source: DRI estimates based on information from Colony Development Operation, 1974 and March 1980.

TABLE 4.1-6. COMPOSITIONS OF SOLID STREAMS

Stream Number (Table No.)	Stream Description	Mass Flow, 10^3 lb/hr (lb/hr)	Components,[a] 10^3 lb/hr					
			H	O	N	C	S	H_2O
1* (4.2-2, 4.2-3, 4.2-4)	Raw Shale Feed	5,481.7	117	61	28	909	44	75
9*	Baghouse Dusts	18.3	0.39	0.20	0.09	3.02	0.15	0.25
27* (4.2-6, 4.2-7, 4.2-8)	Processed Shale	5,170	15	5	13	179	27	720
62	Makeup Chemicals to Stretford Unit (Case Study C)	0.67	N.D.[b]	N.D.	N.D.	N.D.	N.D.	N.D.
81	Makeup Na_2SO_3 to Wellman-Lord (Case Studies A, B)	1.7	0[b]	0	0	0	N.D.	N.D.
87	Makeup HDS Catalyst to Steam Reformer	(7.7)	0	0	0	0	0	0
88	Makeup ZnO Catalyst to Steam Reformer	(1.6)	0	0	0	0	0	0
89	Makeup Fe-Cr Catalyst to Steam Reformer	(2.3)	0	0	0	0	0	0
90	Makeup Cu-Zn Catalyst to Steam Reformer	(3.7)	0	0	0	0	0	0
94*	Spent Catalysts from Steam Reformer	(15.3)	N.D.	N.D.	N.D.	N.D.	N.D.	N.D.
103* (4.2-14)	Coke	66.7	2.1	1.3	4.0	54.6	0.2	4.7
105	Makeup HDN Catalyst to Gas Oil Hydrotreater	(0-30)	0	0	0	0	0	0
109*	Spent Catalysts from Gas Oil Hydrotreater	(0-30)	N.D.	N.D.	N.D.	N.D.	N.D.	N.D.
120	Makeup HDN Catalyst to Naphtha Hydrotreater	(0-17.1)	0	0	0	0	0	0

(Continued)

TABLE 4.1-6 (cont.)

Stream Number (Table No.)	Stream Description	Mass Flow, 10^3 lb/hr (lb/hr)	Components,[a] 10^3 lb/hr					
			H	O	N	C	S	H_2O
122*	Spent Catalysts from Naphtha Hydrotreater	(0-17.1)	N.D.	N.D.	N.D.	N.D.	N.D.	N.D.
134	Phosphorus to Bio-oxidation Unit (Case Study B)	(10)	0	0	0	0	0	0

* Indicates streams that come into contact with the environment.

[a] Elements reported for organic portion of materials, except for sulfur which is total.

[b] N.D. = Not determined; 0 = Estimated to be insignificant (less than 1 lb).

Source: DRI estimates based on information from Colony Development Operation, 1974 and March 1980.

4.2 MAJOR STREAM COMPOSITIONS

Data on the TOSCO II retorting process and product upgrading are available in several documents published by the Colony Development Operation. Most of the data used in this manual have been obtained from the earlier 24 TPSD pilot plant and a later 1,000 TPSD semi-works plant which operated for over five years on the Colony site.

In the following sections, major streams generated from different plant operations (see Section 3) are listed along with their detailed compositions. Material balances for selected streams (both before and after treatment) are also presented. When detailed information on stream compositions or performance of a control technology was not available, calculations were made on the basis of engineering analysis.

4.2.1 Material Balance

The material balance for only the TOSCO II retort is presented in Table 4.2-1. This balance has been estimated from the data presented in Colony's Environmental Impact Analysis (EIA) (Colony Development Operation, 1974). Because of the incomplete data on upgrading processes and various recycle streams, the material balances were not extended for the remainder of the pyrolysis system or for the overall plant. The commercial plant would produce 55,000 BPSD of crude shale oil based on retorting 66,000 TPSD of 35 gpt shale at 100% Fischer assay yield. The net oil product after upgrading and in-plant use would be 47,000 BPSD.

4.2.2 Raw Oil Shale

Elemental analysis of the organic portion of the 35 gpt raw shale has been reported in Colony's EIA and is presented in Table 4.2-2. This analysis is representative of the Mahogany zone oil shale that Colony has proposed to retort and, therefore, it has been used without any modification. The amount of organic oxygen was not reported in the EIA; hence, it was calculated from the analysis of kerogen (Stanfield, et al., 1951). Moisture content was calculated from the amount of foul water obtained during pyrolysis of the raw shale and from the sealing steam added to the retort. Table 4.2-3 indicates an approximate mineral analysis of the raw shale as presented in the EIA. This analysis is useful for determining the extent of carbonate decomposition during retorting and in calculating the theoretical weight of processed shale. Trace elemental distribution in representative raw shale samples from the Colony mine is indicated in Table 4.2-4.

Raw Shale Leachate--

Recently, some literature on column leaching of Colorado oil shales has been published (McWhorter, 1980). Although the quality of field leachate may not be identical to the leachates obtained from laboratory leaching columns, the results from this reference are presented in Table 4.2-5.

TABLE 4.2-1. GROSS MATERIAL BALANCE FOR TOSCO II RETORT[a]

Material In		Flow, 10^3 lb/hr
Raw Shale		5,500
Steam to Retort[b]		150
	Total In	5,650
Material Out		**Flow, 10^3 lb/hr**
Processed Shale[c]		4,450
Retort Gas[d]		240
Foul Water[e]		210
Crude Shale Oil[f]		750
	Total Out	5,650

[a] The material balance is around the TOSCO II retort only. It does not include the balance for the entire pyrolysis system. The balance is based on 66,000 TPSD of 35 gpt shale retorting at 100% Fischer assay efficiency.

[b] Some steam is added to the retort to control the dew point of the pyrolysis vapors and also to seal the rotating joints.

[c] Dry basis.

[d] Only C_4 and lighter components are included in the retort gas.

[e] The foul water includes the steam added to the retort. The moisture contribution from the raw shale is approximately 60 x 10^3 lb/hr.

[f] The oil quantity given is for the product before upgrading. It represents 55,000 BPSD of crude oil.

Sources: DRI estimates based on data from Colony Development Operation, 1974.

TABLE 4.2-2. ORGANIC COMPOSITION OF RAW SHALE
(Stream 1)

Component	Weight Percent	Mass Flow, 10^3 lb/hr*	Flow, 10^3 lb-moles/hr
Raw Shale	100.00	5,500	--
Hydrogen (organic)	2.12	117	116.1
Moisture	1.36	75	4.2
Oxygen (organic)	1.11	61	3.8
Nitrogen (organic)	0.51	28	2.0
Carbon (organic)	16.53	909	75.7
Sulfur (total)	0.80	44	1.4

* Based on 66,000 TPSD of 35 gpt raw oil shale retorting at 100% of Fischer assay yield.

Source: DRI estimates based on data from Colony Development Operation, 1974, and Stanfield, et al., 1951.

TABLE 4.2-3. APPROXIMATE MINERAL ANALYSIS OF RAW OIL SHALE
(Stream 1)

Component	Weight Percent
Dolomite, $CaMg(CO_3)_2$	32
Calcite, $CaCO_3$	16
Quartz, SiO_2	15
Illite, $K_2O \cdot 3Al_2O_3 \cdot 6SiO_2 \cdot 2H_2O$	19
Albite, $NaAlSi_3O_8$	10
Microcline, $KAlSi_3O_8$	6
Pyrite, FeS_2	1
Analcite, $NaAlSi_2O_6 \cdot H_2O$	1
TOTAL	100

Source: Colony Development Operation, 1974.

TABLE 4.2-4. TRACE ELEMENTAL ANALYSIS OF RAW SHALE
(Stream 1)

Element	Concentration (ppmw)	Element	Concentration (ppmw)	Element	Concentration (ppmw)
As	7.2 (0.11)[a]	Ag	<0.01	Au	<0.1
B	140	Ba	32	Bi	0.36
Be	35	Cd	0.14	Gd	0.40
Br	0.01	Ce	1.6	Dy	0.40
Cl	72	Cs	1.2	Er	0.27
Co	39	Eu	0.12	Hf	<0.1
Cr	49	I	<0.01	Hg	<0.1
Cu	15	In	Standard[b]	Ho	0.07
F	1,700	La	1.4	Ir	<0.1
Ga	2.2	Mo	4.9	Lu	<0.1
Ge	0.40	Nb	3.4	Os	<0.1
Li	850	Nd	1.2	Pb	10
Mn	34	Pd	<0.1	Pt	<0.1
Ni	11	Pr	0.25	Re	<0.1
Rb	29	Rh	<0.1	Ta	0.04
Sc	2.4	Ru	<0.1	Tb	0.07
Se	0.08	Sb	0.39	Th	0.77
Sr	69	Sm	0.44	Ti	0.14
Ti	570	Sn	0.11	U	0.99
V	29	Te	<0.1	W	0.42
Y	1.2	Zr	9.3	Yb	0.25
Zn	13				

[a] Quantity in parentheses ( ) is water soluble.

[b] Indium is used as an internal standard in spark-source mass spectroscopy. Because of its presence as a standard, it cannot be measured in the sample.

Source: Colony Development Operation, 1974.

TABLE 4.2-5. LABORATORY COLUMN LEACHATES FROM SOME COLORADO RAW OIL SHALES
(Stream 12)

Component	Unit	USBM Raw Shale (Saline Zone)	Colony Raw Shale	C-a R-5/Mahog. Shale	C-a Composite	Raw Colony Shale (Weathered)	Colony Soil	C-b Soil	Drinking Water Criteria
Al	mg/l	0.34 - 7.54	0.05 - 0.75	0.3 - 3.53	<0.05 - 0.69	<0.05 - 0.17	<0.05 - 0.37	<0.05	--
As	"	<0.005	<0.005	<0.005	<0.005	<0.005	<0.005	<0.005	0.05
B	"	0.24 - 43	<0.025 - 2.75	<0.025 - 0.59	<0.025 - 1.97	0.12 - 0.365	0.47 - 0.76	0.65 - 0.985	--
Ba	"	0.061 - 0.17	0.07 - 0.48	0.088 - 0.27	0.027 - 0.22	0.088 - 0.495	0.12 - 0.57	0.038 - 0.240	1.0
Be	"	<0.025	<0.025	<0.025	<0.025	<0.025	<0.025	<0.025	--
Ca	"	36 - 750	40 - 1,550	180 - 1,510	18 - 970	25 - 500	40 - 960	6.5 - 330	--
Cl	"	<1.0 - 560	1.1 - 22	1.9 - 300	0.3 - 130	0.8 - 71	0.1 - 200	1.8 - 520	--
CO_3	"	0.1 - 1.1	0.03 - 1.6	<0.1 - 346	0.3 - 0.7	0.12 - 1.03	0.17 - 2.9	1.0 - 8.8	--
Cr	"	<0.025 - 0.68	<0.025 - 0.04	0.022 - 0.034	<0.025 - 0.043	<0.025	<0.025	<0.025 - 0.069	0.05
Cu	"	<0.025 - 0.30	<0.025 - 0.41	<0.025 - 0.69	<0.025 - 0.44	<0.039 - 0.31	0.075 - 0.38	<0.025 - 0.28	1.0
EC	µmhos/cm	280 - 13,000	240 - 5,400	1,900 - 37,000	125 - 8,200	240 - 4,200	370 - 9,000	840 - 3,000	--
F	mg/l	9.5 - 75	4.0 - 7.2	0.8 - 65	<0.5 - 3.0	4.0 - 8.7	1.2 - 10	4.5 - 25	1.8
Fe	"	0.01 - 1.8	<0.03 - 0.89	<0.1	<0.1	<0.03 - 0.08	<0.01 - 0.52	0.1 - 0.42	0.3
HCO_3	"	83.1 - 321	50 - 558	3.0 - 403	82 - 1,026	136 - 233	152 - 480	481 - 846	--
Hg	"	<0.0001 - 0.0035	<0.0005	<0.0001	<0.0001	<0.0005	<0.0005	<0.0001	0.002
K	"	1.1 - 22	1.7 - 59	8.2 - 640	0.4 - 34	0.83 - 57	25 - 270	1.3 - 22	--
Li	"	0.02 - 3.1	0.02 - 0.151	0.02 - 0.11	<0.02 - 0.79	0.004 - 0.02	0.03 - 0.47	0.02 - 0.08	--
Mg	"	6.7 - 1,050	5.5 - 140	0.675 - 108	4.9 - 820	17 - 365	17 - 1,450	2.6 - 145	--
Mn	"	0.075 - 3.2	0.074 - 2.74	<0.05 - 0.35	<0.05 - 0.40	0.05 - 0.11	<0.05 - 0.97	<0.05 - 0.16	0.05
MO	"	0.09 - 0.87	0.09 - 0.65	0.10 - 5.18	0.10 - 2.2	0.075 - 0.74	<0.05 - 0.84	<0.05 - 0.43	--
Na	"	<25 - 1,430	5.8 - 145	27 - 7,710	4.3 - 1,240	14 - 350	3.8 - 340	210 - 2,050	--
Ni	"	<0.025 - 0.60	<0.05 - 0.10	0.047 - 0.085	<0.05 - 0.16	<0.05 - 0.06	<0.05 - 0.07	<0.05 - 0.075	--
NO_3	"	<1.25 - 40	0.9 - 25	4 - 172	<0.5 - 140	<0.3 - 245	<0.2 - 180	1.4 - 30	10
Pb	"	<0.04 - 1.9	<0.05 - 0.64	<0.05 - 0.83	<0.05 - 0.77	0.12 - 0.35	0.12 - 0.38	0.07 - 0.31	0.05
pH	--	6.8 - 8.06	7.06 - 8.18	6.93 - 11.98	7.03 - 7.99	6.93 - 8.11	7.1 - 8.2	7.43 - 8.49	--
Se	mg/l	<0.01	<0.01	<0.005	<0.005	<0.01	<0.01	<0.005	0.01
Si	"	1.65 - 9.7	2.12 - 10.58	1.2 - 23.28	5.8 - 19.58	6.71 - 14.72	8.0 - 16.8	11.0 - 20.7	--
Sn	"	<0.025 - 1.28	0.12 - 0.67	--	--	0.041 - 0.67	<0.025 - 1.37	--	--
SO_4	"	20 - 5,700	28 - 5,150	5 - 6,600	7.9 - 6,100	15 - 2,650	60 - 4,200	23 - 860	250
TDS	"	70 - 13,300	110 - 7,160	610 - 30,130	164 - 9,450	120 - 4,760	250 - 7,450	1,050 - 3,760	500
Zn	"	0.01 - 6.8	<0.02 - 0.68	<0.01 - 0.09	<0.02 - 1.5	0.07 - 0.3	0.01 - 0.65	0.04 - 0.35	5.0

Source: McWhorter, 1980.

4.2.3 Processed Shale

TOSCO II processed shale has been analyzed for chemical as well as physical properties (Colony Development Operation, 1974). The reported chemical composition, including organic elemental analysis, is shown in Table 4.2-6. The quantity and composition of the processed shale, derived by material and elemental balances, are presented in Table 4.2-7. It can be seen that the two tables differ in terms of organic elemental composition. Since a fairly good balance between inputs and outputs has been obtained for the TOSCO II process, the composition obtained by material balance is used in calculating mass flows. Some of the physical properties are reported in Table 4.2-8.

TABLE 4.2-6. REPORTED ANALYSIS OF TOSCO II PROCESSED SHALE[a]
(Stream 27)

Component	Weight Percent
Hydrogen (organic)	0.44
Oxygen (organic)	NR[b]
Nitrogen (organic)	0.35
Carbon (organic)	4.49
Sulfur (total)	0.76
Na_2O	8.68
K_2O	3.28
CaO	15.80
MgO	5.31
Al_2O_3	6.80
SiO_2	33.00
Fe_2O_3	2.52
CO_2	20.92
Loss on Ignition at 900°C	27.60

[a] Dry basis.

[b] NR = Not reported.

Source: Colony Development Operation, 1974.

TABLE 4.2-7. COMPOSITION OF PROCESSED SHALE
(Stream 27)

Component	Weight Percent	Mass Flow, 10^3 lb/hr	Flow, 10^3 lb-moles/hr
Processed Shale*	100.00	5,170	--
Hydrogen (organic)	0.29	15	14.9
Oxygen (organic)	0.09	5	0.31
Nitrogen (organic)	0.24	13	0.9
Carbon (organic)	3.46	179	14.9
Sulfur (total)	0.52	27	0.8

* Moisturized to a 14% water content.

Source: DRI estimates based on material and elemental balances using data from Colony Development Operation, 1974.

TABLE 4.2-8. PHYSICAL PROPERTIES OF TOSCO II PROCESSED SHALE
(Stream 27)

Parameter	Unit	Quantity
Geometric Mean Size	cm	0.007
Geometric Standard Deviation	--	3.27
Permeability	cm^2	2.5×10^{-10}
Bulk Density	g/cc	1.30
Solids Density	g/cc	2.49
Porosity	--	0.47
Maximum Size	cm	<0.476
Minimum Size	cm	>0.00077

Source: Ward, Margheim and Löf, December 1971.

Processed Shale Leachate--

Trace element analysis performed on runoff and leachates from field test plots of TOSCO II processed shale is presented in Table 4.2-9 (Metcalf & Eddy, October 1975). For comparison, the trace element levels found in some naturally occurring waters are also presented in the table.

Leachable organics from the same batch of processed shale were determined in laboratory leaching experiments (Metcalf & Eddy, October 1975). The results of these experiments are presented in Table 4.2-10.

Some of the leachable inorganics from the TOSCO II processed shale were determined in a separate laboratory experiment (Ward, Margheim and Löf, December 1971) and these results are presented in Table 4.2-11.

4.2.4 Crude Shale Oil and Upgraded Oil Products

Fractionation of pyrolysis vapors results in product breakdown into retort gas, water, naphtha, gas oil and bottoms oil. The properties and elemental compositions of the last three oil fractions are presented in Table 4.2-12. Since product upgrading is considered an integral part of the process, the properties of the hydrotreated shale oil obtained as a result of upgrading are included in Table 4.2-13; quantities and estimated compositions of other products of the upgrading operations are listed in Table 4.2-14. The gross mass flows in these latter two tables do not agree. This is due to conversion of some liquid products into gaseous products upon upgrading treatments. The production of crude shale oil is 55,000 BPSD, and the yield is 100% of Fischer assay. The crude oil is upgraded to produce 47,000 BPSD of syncrude and 4,330 BPSD of liquid petroleum gas. During the upgrading process, 3,100 BPSD of C_4 liquids are also produced; this product is used as process fuel in the preheating system.

4.2.5 Retort Gas

The analysis of the raw retort gas as it emerges from the oil recovery system (pyrolysis fractionator) has been reported in Colony's EIA. However, the net gas entering the gas recovery and treating units is different due to addition of gaseous overheads from the other upgrading units. While the exact compositions of these additional streams are not known, an attempt was made to determine the gross addition to the raw retort gas by material as well as elemental balances for the inputs and outputs to the process. These analyses are shown in Table 4.2-15. Also, the retort gas contains sulfur species other than H_2S; the content of these species in the fuel gas, after treatment by the diethanolamine (DEA) process, has been measured in a pilot plant study and it is listed in Table 4.2-16 (Colony Development Operation, January 26, 1979). Since the removal efficiency of the amine system is not known for these compounds, their exact amounts in the untreated gas cannot be calculated. It is likely, however, that since diethanolamine (DEA) removes COS quite efficiently, the amount of COS in the untreated gas could be significantly higher than that found in the treated gas. The composite gas to the gas recovery unit is fractionated into C_1/C_2 and C_3/C_4 gases. Since the compositions of these fractions are not documented by Colony, an

TABLE 4.2-9. LEVELS OF TRACE ELEMENTS MEASURED IN RUNOFF AND LEACHATES FROM FIELD TEST PLOTS OF TOSCO II RETORTED SHALE (ppm)
(Stream 178)

Element	Runoff from Typical Rain Storms	First Leachate from Sloping Section of Plot	First Leachate from Deepest Portion of Bed	Maximum Levels in Surface Waters/Lease Tracts			Mean Levels in Ground Waters					
							C-a			C-b		
				C-a	C-b	U-a/U-b	Alluvial Aquifer	Upper Aquifer	Lower Aquifer	Alluvial Aquifer	Upper Aquifer	Lower Aquifer
Be		0.0006										
Hg	0.00002-0.00007	0.0005	0.0003	0.001	0.0008	0.0002	0.000	0.000	0.000	0.003	0.001	0.001
Cd		0.006	0.003	0.003	0.006	0.004	0.03	0.002	0.001	--	--	--
Sb		0.001-0.003	0.002									
Se	0.004-0.007	0.002-2	2	0.006	0.005	0.002	0.000	0.000	0.000	--	--	--
Mo	0.03-0.09	3-74	5-74									
Co	0.01	0.01	0.001-0.04									
Ni	0.05	0.05-0.02	0.2-0.6									
Pb	0.009	0.004	0.003	0.009	0.011	0.005	0.40	0.35	0.66	0.026	0.013	0.034
As	0.005-0.008	0.02	0.08-0.2	0.009	0.005	0.002	0.000	0.004	0.001	0.006	0.014	0.013
Cr	0.01-0.07	0.004-0.009	0.004	0.08	0.02	0.01	0.000	0.005	0.000	--	--	--
Cu	0.02	0.06-0.2	0.06-0.2	0.008	0.010	0.013	0.5	0.03	0.02			
Zr	0.001	0.001	0.003									
B	--	0.02-0.9	0.02	0.77	0.33	0.09	1.25	0.7	1.8	0.7	1.5	3.0
Zn	0.01-0.09	1	1-3									
Li	0.02-0.2	0.007-0.076	0.07-0.8									
V	0.003	0.003-0.006	0.004-0.1									
Mn	0.004	0.06-0.2	0.06-0.5									
F	0.02-3	2-17	0.006-12	10	1.3	0.3	0.37	4.1	14	0.97	18	19
Ba	0.02-0.04	0.06-0.1	0.1	0.40	0.20	0.14	0.003	0.000	0.000	0.09	0.10	0.10
Fe	0.09-0.6	0.6-2	1-3									

Source: Metcalf & Eddy Engineers, October 1975.

TABLE 4.2-10. LEACHABLE ORGANICS IN THE TOSCO II PROCESSED SHALE
(Stream 178)

Sample Number	Volume of Water Added (ml)	Volume of Water Recovered (ml)	TOC (mg/1)	TOC (mg)
1	250	165	176	29
2	250	215	94	20
3	250	240	52	12.5
4	250	250	40	10
5	250	245	30	7.4
TOTAL	1,250	1,115		78.9

Source: Metcalf & Eddy Engineers, October 1975.

TABLE 4.2-11. SOLUBLE SALTS IN TOSCO II PROCESSED SHALE
(Stream 178)

Volume of Leachate Sample (cc)	Total Volume of Leachate (cc)	Conductance of Sample (μmhos/cm @25°C)	Concentration (mg/l) of Sample				
			Na^+	Ca^{++}	Mg^{++}	$SO_4^=$	Cl^-
254	254	78,100	35,200	3,150	4,720	90,000	3,080
340	594	61,600	26,700	2,145	3,725	70,000	1,900
316	910	43,800	14,900	1,560	2,650	42,500	913
150	1,060	25,100	6,900	900	1,450	21,500	370
260	1,320	13,550	2,530	560	500	8,200	250
125	1,445	9,200	1,210	569	579	5,900	138
155	1,600	7,350	735	585	468	4,520	138
250	1,850	6,825	502	609	536	4,450	80
650	2,500	5,700	--	--	--	--	--
650	3,150	4,800	--	--	--	--	--
650	3,800	4,250	--	--	--	--	--
760	4,560	3,850	--	--	--	--	--
	∞*	1,800	86	64	118	740	11

* The values at infinite leaching are extrapolated and not actually measured.

Source: Ward, Margheim and Löf, December 1971.

TABLE 4.2-12. PROPERTIES OF TOSCO II CRUDE SHALE OIL
(Streams 40, 41, 42)

Component	Boiling Point, °F	Volume Percent (BPSD)	Gravity, °API	Weight Percent	Pour Point, °F	Mass Flow, 10^3 lb/hr	Flow, 10^3 lb-moles/hr
Crude Shale Oil	IBP - 950+	100 (55,000)	21	100	30	745	N.D.
Naphtha (Stream 40)	IBP - 400	17 (9,350)	51	14.2	N.D.[a]	106	N.D.
Gas Oil (Stream 41)	400 - 950	60 (33,000)	20	60.4	N.D.	450	N.D.
Bottoms Oil (Stream 42)	950+	23 (12,650)	6.5	25.4	N.D.	189	N.D.
Composition							
Hydrogen	--	--	--	11.3	--	84	83.5
Oxygen	--	--	--	1.23[b]	--	9	0.6
Nitrogen	--	--	--	2.01	--	15	1.1
Carbon	--	--	--	84.7	--	631	52.5
Sulfur	--	--	--	0.76	--	6	0.2

[a] N.D. = Not determined.

[b] From elemental balance.

Source: DRI estimates based on data from Whitcombe and Vawter, March 1975.

TABLE 4.2-13. PROPERTIES OF UPGRADED FUEL OIL FROM TOSCO II CRUDE SHALE OIL
(Streams 117, 123)

Component	Boiling Point, °F	Volume Percent (BPSD)	Gravity, °API	Weight Percent	Pour Point, °F	Mass Flow, 10^3 lb/hr	Flow, 10^3 lb-moles/hr
Hydrotreated Fuel Oil	C_5 - 650+	100 (47,000)	40	100	50-60	566	--
Treated Naphtha (Stream 123)	C_5 - 400	43 (20,200)	50	40.6	N.D.[a]	230	--
Treated Gas Oil (Stream 117)	400 - 650+	57 (26,800)	33	59.4	N.D.	336	--
Composition[b]							
Hydrogen	--	--	--	13.78	--	78	77
Moisture	--	--	--	0.18	--	1	0.1
Nitrogen	--	--	--	0.06	--	0.3	0.02
Carbon	--	--	--	86.04	--	487	41
Sulfur	--	--	--	0.001	--	0.01	--

[a] N.D. = Not determined.

[b] From material balance.

Source: DRI estimates based on data from Whitcombe and Vawter, March 1975.

TABLE 4.2-14. PROPERTIES OF OTHER PRODUCTS FROM UPGRADING OF TOSCO II CRUDE SHALE OIL
(Streams 60 or 77, 103, 108, 129)

Component	Coke[a] (Stream 103)	Diesel[b] (Stream 108)	Ammonia[c] (Stream 129)	Sulfur[c] (Streams 60 or 77)
Hydrogen				
Weight Percent	3.19	15.0	17.65	--
Mass Flow, 10^3 lb/hr	2.1	0.9	2.1	--
Flow, 10^3 lb-moles/hr	2.1	0.9	2.1	--
Moisture				
Weight Percent	7.00	--	--	--
Mass Flow, 10^3 lb/hr	4.7	--	--	--
Flow, 10^3 lb-moles/hr	0.3	--	--	--
Oxygen				
Weight Percent	2.0	--	--	--
Mass Flow, 10^3 lb/hr	1.3	--	--	--
Flow, 10^3 lb-moles/hr	0.1	--	--	--
Nitrogen				
Weight Percent	5.96	--	82.35	--
Mass Flow, 10^3 lb/hr	4.0	--	9.9	--
Flow, 10^3 lb-moles/hr	0.3	--	0.7	--
Carbon				
Weight Percent	81.48	85.0	--	--
Mass Flow, 10^3 lb/hr	54.6	5.1	--	--
Flow, 10^3 lb-moles/hr	4.5	0.4	--	--
Sulfur				
Weight Percent	0.37	--	--	100.0
Mass Flow, 10^3 lb/hr	0.2	--	--	16.5-17.0
Flow, 10^3 lb-moles/hr	0.01	--	--	0.5
Total Mass Flow, 10^3 lb/hr	67	6	11	16.5-17.0

[a] Analysis of coke estimated from elemental and material balances based on data from Colony Development Operation, 1974, and Whitcombe and Vawter, March 1975.

[b] Analysis of diesel assumed.

[c] Quantity of NH_3 and S from Colony Development Operation, 1974.

Source: DRI estimates based on data from Colony Development Operation, 1974, and Whitcombe and Vawter, March 1975.

TABLE 4.2-15. COMPOSITION OF RETORT GAS BEFORE TREATMENT
(Stream 28)

Component	MWt	Mass Flow, 10^3 lb/hr	Overhead Additions* 10^3 lb/hr	Composite Gas to Gas Recovery			
				Mass %	Mole %	Mass Flow, 10^3 lb/hr	Mass Flow, 10^3 lb-moles/hr
H_2	2	3.59	--	1.24	15.57	3.59	1.80
CO	28	8.38	--	2.90	2.60	8.38	0.30
H_2S	34	12.32	--	4.26	3.15	12.32	0.36
CO_2	44	79.07	--	27.36	15.61	79.07	1.80
CH_4	16	28.51	24	18.17	28.52	52.51	3.28
C_2H_4	28	20.73	14	12.02	10.78	34.73	1.24
C_2H_6	30	20.16	--	6.98	5.84	20.16	0.67
C_3H_6	42	26.48	--	9.16	5.48	26.48	0.63
C_3H_8	44	13.03	--	4.51	2.57	13.03	0.30
C_4H_8	56	16.24	--	5.62	2.52	16.24	0.29
i-C_4H_{10}	58	0.98	--	0.34	0.15	0.98	0.02
n-C_4H_{10}	58	9.54	--	3.30	1.43	9.54	0.16
H_2O	18	12.00	--	4.15	5.79	12.00	0.67
TOTAL		251.03	38	100.01	100.01	289.03	11.52
MWt				25.11			
Total H (excluding H_2O)		28.71		12.71		36.73	36.44
Total C		136.42		57.59		166.44	13.86
Total O (excluding H_2O)		62.30		21.56		62.31	3.89
Total S		11.60		4.01		11.59	0.36

* Approximately 30 x 10^3 lb/hr of carbon and 8 x 10^3 lb/hr of hydrogen are calculated to be generated during upgrading operations. This gives an empirical formula of C_5H_{16} which is assumed to be $3CH_4 + C_2H_4$.

Source: DRI estimates based on data from Colony Development Operation, 1974.

arbitrary proportion of the constituents between the two fractions is assumed. The resulting compositions are presented in Table 4.2-17. The estimated compositions of treated gaseous products, obtained by material and elemental balances, are presented in Tables 4.2-18 through 4.2-21. Calculations are performed separately for the C_1/C_2 and C_3/C_4 fractions treated either by the amine process or by the Stretford process.

TABLE 4.2-16. SULFUR CONTENT OF THE AMINE TREATED FUEL GAS
(Stream 33)

Component	Concentration, ppmv
H_2S	130
CH_3SH	20
C_2H_5SH	10
$i\text{-}C_3H_7SH$	5
COS	135
CS_2	nil
TOTAL	300

Source: Colony Development Operation, January 26, 1979.

4.2.6 Flue Gas

The total emissions from the three case studies were estimated, in part, using calculated flue gas compositions. The task of calculating these data is complicated by the presence of the upgrading facility.

Treated fuel gas (molecular weight approximately 16) is the principal fuel used in most furnaces and in the boiler; it is also consumed chemically in producing hydrogen. The fuel gas, mostly methane, is recovered by fractionating the gases, C_1 to C_4, after they have been separated from the liquid products. The total content of H_2S in the mixture of gases must also be fractionated between the various cuts to obtain the quantity in the C_1 fraction. Calculations were made to estimate the distribution of organics and H_2S in order to calculate flue gas compositions. Going from the amine process to the Stretford process, the composition of this treated gas also must be changed to reflect a different removal efficiency for H_2S, other sulfur species and CO_2. While the amine process removes most of the CO_2, the Stretford process removes very little, changing the heating value and size of the treated streams.

TABLE 4.2-17. ESTIMATED COMPOSITIONS OF C_1/C_2 AND C_3/C_4 FRACTIONS
(Streams 32, 35)

Component	MWt	Compressed Composite Gas 10^3 lb/hr	C_1/C_2 Fraction[a] (Stream 32) lb/hr	C_3/C_4 Fraction[a] (Stream 35) lb/hr
H_2S	34	12.32	12,197	123
RSH[b]	56	0.02	14.5	10.1
COS	60	0.12	120	1.0
H_2	2	3.59	3,590	--
CO	28	8.38	8,380	--
CO_2	44	79.07	79,070	--
CH_4	16	52.51	52,510	--
C_2H_4	28	34.73	34,383	347
C_2H_6	30	20.16	19,958	202
C_3H_6	42	26.48	1,324	25,156
C_3H_8	44	13.03	652	12,379
C_4H_8	56	16.24	--	16,240
i-C_4H_{10}	58	0.98	--	980
n-C_4H_{10}	58	9.54	--	9,540
TOTAL		277.17	212,198.5	64,978.1
Total H		36.72	26,648	10,077
Total O		62.33	62,326	0.3
Total C		166.46	111,675	54,780
Total S		11.67	11,549	122

[a] The compositions of C_1/C_2 and C_3/C_4 fractions are not documented; therefore, it is assumed that 1% each of H_2S, COS, C_2H_4, and C_2H_6 and 40% of RSH go into the C_3/C_4 fraction and 5% of C_3H_6 and C_3H_8 remain in the C_1/C_2 fraction. Other components are not proportionated between the two fractions.

[b] Assumed before treatment concentration of RSH 35 ppmv and COS 270 ppmv.

Source: DRI estimates based on data from Colony Development Operation, 1974.

TABLE 4.2-18. C_1/C_2 FRACTION RETORT GAS AFTER AMINE PROCESS
(Streams 32, 33)

Component	MWt	Untreated Gas (Stream 32) lb/hr	After Amine Absorber (Stream 33) Mass %	Mole %	Mass Flow, lb/hr	Flow, lb-moles/hr
H_2S	34	12,197	0.0266	0.0130	32.4*	0.95
RSH	56	14.5	0.0119	0.0035	14.5	0.26
COS	60	120	0.0489	0.0135	59.5	0.99
H_2	2	3,590	2.95	24.47	3,590	1,795.0
CO	28	8,380	6.89	4.08	8,380	299.29
CO_2	44	79,070	0.65	0.24	790	17.95
CH_4	16	52,510	43.15	44.74	52,510	3,281.88
C_2H_4	28	34,383	28.25	16.74	34,383	1,227.96
C_2H_6	30	19,958	16.40	9.07	19,958	665.27
C_3H_6	42	1,324	1.09	0.43	1,324	31.52
C_3H_8	44	652	0.54	0.20	652	14.82
TOTAL		212,198.5	100.01	100.00	121,693.5	7,335.89
MWt		22.40	16.59			
Total H			21.31		25,932.9	25,932.9
Total O			4.43		5,391.0	336.9
Total C			74.2		90,296.6	7,524.7
Total S			0.06		74.0	2.3
Heating Value, LHV Btu/lb (Btu/SCF)			20,555 (895)			

* Based on after treatment H_2S concentration of 130 ppmv as given by Colony Development Operation, January 26, 1979.

Source: DRI estimates based on data from Colony Development Operation, 1974 and January 26, 1979.

TABLE 4.2-19. C_1/C_2 FRACTION RETORT GAS AFTER STRETFORD PROCESS
(Streams 32, 34, 128)

Component	MWt	Untreated Gas (Stream 32) lb/hr	Ammonia Recovery Overhead[a] (Stream 128) lb/hr	After Stretford Process (Stream 34) Mass %	Mole %	Mass Flow, lb/hr	Flow, lb-moles/hr
H_2S	34	12,197	5,792	0.0047	0.0030	9.2[b]	0.27
RSH	56	14.5	--	0.0022	0.0009	4.4[c]	0.08
COS	60	120	--	0.0520	0.0188	102[b]	1.70
H_2	2	3,590	--	1.83	19.89	3,590	1,795.00
CO	28	8,380	--	4.27	3.32	8,380	299.29
CO_2	44	79,070	888	38.33	18.93	75,160[b]	1,708.18
CH_4	16	52,510	--	26.78	36.36	52,510	3,281.88
C_2H_4	28	34,383	--	17.54	13.60	34,383	1,227.96
C_2H_6	30	19,958	--	10.18	7.37	19,958	665.27
C_3H_6	42	1,324	--	0.68	0.35	1,324	31.52
C_3H_8	44	652	--	0.33	0.16	652	14.82
TOTAL		212,198.5	6,680	100.00	100.00	196,072.6	9,025.97
MWt				21.72			
Total H				13.17		25,933	25,933
Total O				30.52		59,485	3,718
Total C				56.28		110,590	9,216
Total S				0.035		66	2
Heating Value, LHV Btu/lb (Btu/SCF)				12,701 (610)			

[a] Composition presented is for compressed and cooled overhead vapors before they enter the Stretford absorber.

[b] Based on after treatment concentration of 30 ppmv H_2S as given by Peabody Process Systems, Inc., February 1981.

[c] Approximately 70% of RSH, 15% of COS, and 6% of CO_2 are assumed to be removed by the process.

Source: DRI estimates based on data from Colony Development Operation, 1974, and Peabody Process Systems, Inc., February 1981.

TABLE 4.2-20. C_3/C_4 FRACTION RETORT GAS AFTER AMINE PROCESS
(Streams 35, 36)

Component	MWt	Untreated Gas (Stream 35) lb/hr	After Amine Absorber (Stream 36) Mass %	Mole %	Mass Flow, lb/hr	Flow, lb-moles/hr
H_2S	34	123	0.0094	0.0130	6.1	0.18
RSH	56	10.1	0.0156	0.0131	10.1	0.18
COS	60	1.0	0.0008	0.0006	0.5*	0.008
C_2H_4	28	347	0.53	0.90	347	12.39
C_2H_6	30	202	0.31	0.49	202	6.73
C_3H_6	42	25,156	38.78	43.68	25,156	598.95
C_3H_8	44	12,379	19.09	20.52	12,379	281.34
C_4H_8	56	16,240	25.04	21.15	16,240	290.00
i-C_4H_{10}	58	980	1.51	1.23	980	16.90
n-C_4H_{10}	58	9,540	14.71	12.00	9,540	164.48
TOTAL		64,978.1	100.00	100.00	64,860.7	1,371.16
MWt			47.30			
Total H			15.52		10,065.2	10,065.2
Total O			0.0003		0.2	0.01
Total C			84.47		54,778.0	4,564.8
Total S			0.0005		11.2	0.35
Heating Value, LHV Btu/lb (Btu/SCF)			19,702 (2,458)			

* A 50% removal of COS is assumed.

Source: DRI estimates based on data from Colony Development Operation, 1974.

TABLE 4.2-21. C_3/C_4 FRACTION RETORT GAS AFTER STRETFORD PROCESS
(Streams 35, 72)

Component	MWt	Untreated Gas (Stream 35) lb/hr	After Stretford Process (Stream 72) Mass %	Mole %	Mass Flow, lb/hr	Flow, lb-moles/hr
H_2S	34	123	0.0022	0.0030	1.4[a]	0.04
RSH	56	10.1	0.0109	0.0095	7.1[b]	0.13
COS	60	1.0	0.0013	0.0010	0.9[b]	0.01
C_2H_4	28	347	0.54	0.90	347	12.39
C_2H_6	30	202	0.31	0.49	202	6.73
C_3H_6	42	25,156	38.79	43.69	25,156	598.95
C_3H_8	44	12,379	19.09	20.52	12,379	281.34
C_4H_8	56	16,240	25.04	21.15	16,240	290.00
i-C_4H_{10}	58	980	1.51	1.23	980	16.90
n-C_4H_{10}	58	9,540	14.71	12.00	9,540	164.48
TOTAL		64,978.1	100.00	99.99	64,853.4	1,370.97
MWt			47.30			
Total H			15.52		10,069.0	10,063.9
Total O			0.0003		0.2	0.01
Total C			84.47		54,778.7	4,564.5
Total S			0.0005		5.4	0.01
Heating Value, LHV Btu/lb (Btu/SCF)			19,702 (2,458)			

[a] Based on after treatment concentration of 30 ppmv H_2S as given by Peabody Process Systems, Inc., February 1981.

[b] Approximately 70% of RSH and 15% of COS are assumed to be removed by the process.

Source: DRI estimates based on data from Colony Development Operation, 1974, and Peabody Process Systems, Inc., February 1981.

The calculated flue gas compositions for the combustion of the entire quantity of fuel gas burned in the plant, as well as for combustion of the quantities of liquids and crude shale oil burned, are shown in Tables 4.2-22 and 4.2-23. Colony is planning to use crude shale oil in the ball heater and thermal oxidizer because approximately 95% of the SO_2 in the preheat system flue gas is claimed to be removed by adsorption on the raw shale (Colony Development Operation, 1977). This eliminates the need for using upgraded oil in the preheat system. If judged appropriate, the fuel balance may be shifted toward the use of upgraded oil after reaching full capacity operation.

The materials balance around the Claus unit is presented in Table 4.2-24. The acid gas from the amine regenerator is the primary feed stream to the unit. In addition, the overhead from the ammonia recovery unit and the tail gas recycle stream from the Wellman-Lord unit are introduced. A metered amount of air is added to cause oxidation of enough H_2S to provide a 2:1 (H_2S:SO_2) stoichiometric for a subsequent catalytic reaction, producing elemental sulfur. The unrecovered sulfur compounds in the Claus tail gas are then fed to the Wellman-Lord unit for further recovery.

The unreacted H_2S in the Claus tail gas is converted to SO_2 by introducing fuel and air in the Wellman-Lord incinerator. The SO_2 is then recovered by reaction with Na_2SO_3 and returned to the Claus unit as the tail gas recycle stream. The SO_2-free flue gas is emitted to the atmosphere. Table 4.2-25 gives the composition of the streams to and from the Wellman-Lord unit.

4.2.7 Process Wastewaters

There are two major process wastewater streams produced at the Colony plant: the foul water from the TOSCO II retorting process and the sour water obtained during upgrading of oil products.

The foul water is essentially gas condensate from the fractionator in the oil recovery system. For the most part, it is made up of the moisture contained in the raw oil shale and the steam added during retorting, as well as some dissolved materials. The quantity of inorganic salts present is small, as shown in Table 4.2-26, and most of the dissolved materials present are organic. Based on water samples collected from pilot plant runs, the organics may be classified into acids, bases, neutrals, and phenols, as shown in Table 4.2-27. As the name gas condensate implies, this water stream is evolved by condensation from a gas phase, so the dissolved materials can be expected to be relatively volatile and readily strippable. This is confirmed by the laboratory stripping data reported by Metcalf & Eddy (October 1975), which indicate that the organic concentration in the stripped water was less than 15% of that in the original sample. In practice, the extent of stripping will likely not be as high as obtained in the laboratory, and some species may not be as readily removed in a refluxed stripping tower. For these reasons, a 50% removal efficiency for organics by steam stripping was used.

TABLE 4.2-22. CALCULATED FLUE GAS COMPOSITIONS FOR FUELS BURNED IN THE COLONY PLANT, CASE STUDIES A AND B
(Streams 18, 19, 24, 91, 104, 118, 119, 125, 179)

Fuel Use	Fuel Rate/Type[a] (MMBtu/hr)	Combustion Products (10^3 lb/hr)					
		CO_2	H_2O	N_2	O_2	SO_2 (lb/hr)	NOx (lb/hr)
Preheat System:							
Incinerator[b]	510/C_4+	80.7	41.7	414.8	35.6	0.5	--
	102/Oil	16.2	7.4	79.4	6.6	86.1	134.3
Ball Heater[b]	474/Fuel Gas	62.8	49.3	382.6	31.9	21.6	--
	956/Oil	154.7	70.9	759.4	63.3	807.3	1,258.7
Subtotal		314.4	169.3	1,636.2	137.4	915.5	1,393.0
Total Flue Gas[c] (after venturi scrubber, Stream 18)		314.4	169.3	1,636.2	137.4	51.0	1,314.8
Steam Superheater[b] (Stream 24)	126/Oil	20.4	9.3	100.1	8.3	106.4	165.9
Total Flue Gas[c] (after venturi scrubber, Stream 19)		20.4	9.3	100.1	8.3	94.3	113.4
Wellman-Lord Process[d]	87/Fuel Gas	11.4	9.0	65.5	3.7	4.0	--
Heaters, Furnaces and Boiler:							
Hydrogen Furnace (Stream 91)	600/Fuel Gas	79.4	62.4	484.3	40.4	27.4	82.2
Naphtha Heater (Stream 125)	9/Fuel Gas	1.2	0.9	7.3	0.6	0.4	1.3
Gas Oil Heater (Stream 118)	20/Fuel Gas	2.7	2.1	16.1	1.4	0.9	2.7
Fractionator Reboiler (Stream 119)	81/Fuel Gas	10.7	8.4	65.4	5.5	3.8	11.2
Coker Feed Heater (Stream 104)	62/Fuel Gas	8.2	6.4	50.0	4.2	2.8	8.4
Boilers (Stream 179)	200/Fuel Gas	26.5	20.8	161.4	13.5	7.2	21.6

[a] The fuel rates and types are obtained from U.S. DOI, 1977, and Colony Development Operation, 1977.

[b] The quantity of NOx is that calculated from the fuel based nitrogen only.

[c] The quantity of SO_2 is that remaining after absorption on the shale. The quantity of NOx includes fixation of atmospheric nitrogen less any NOx absorbed on the shale.

[d] The combustion products are from burning the fuel only. See Table 4.2-25 for the total flue gas composition.

Source: DRI estimates based on data from Colony Development Operation, 1977, and U.S. DOI, 1977.

TABLE 4.2-23. CALCULATED FLUE GAS COMPOSITIONS FOR FUELS BURNED IN THE COLONY PLANT, CASE STUDY C
(Streams 18, 19, 24, 91, 104, 118, 119, 125, 179)

Fuel Use	Fuel Rate/Type[a] (MMBtu/hr)	Combustion Products (10^3 lb/hr)					
		CO_2	H_2O	N_2	O_2	SO_2 (lb/hr)	NOx (lb/hr)
Preheat System:							
Incinerator[b]	510/C_4^+	80.7	41.7	414.8	35.6	0.5	--
	102/Oil	16.2	7.4	79.4	6.6	86.1	134.3
Ball Heater[b]	625/Fuel Gas	126.6	80.0	614.2	51.2	41.9	--
	805/Oil	108.4	49.6	302.0	44.4	679.8	1,014.5
Subtotal		331.9	178.7	1,410.4	137.8	808.3	1,148.8
Total Flue Gas[c] (after venturi scrubber, Stream 18)		331.9	178.7	1,410.4	137.8	45.0	1,084.3
Steam Superheater[b] (Stream 24)	126/Oil	20.4	9.3	100.1	8.3	106.4	165.9
Total Flue Gas[c] (after venturi scrubber, Stream 19)		20.4	9.3	100.1	8.3	94.3	113.4
Heaters, Furnaces and Boiler:							
Hydrogen Furnace (Stream 91)	600/Fuel Gas	97.5	62.4	484.9	40.4	33.0	82.2
Naphtha Heater (Stream 125)	9/Fuel Gas	1.5	0.9	7.3	0.6	0.5	1.3
Gas Oil Heater (Stream 118)	20/Fuel Gas	3.3	2.1	16.2	1.4	1.1	2.7
Fractionator Reboiler (Stream 119)	81/Fuel Gas	13.2	8.4	65.5	5.5	4.5	11.2
Coker Feed Heater (Stream 104)	62/Fuel Gas	10.1	6.5	50.1	4.2	3.4	8.4
Boilers (Stream 179)	136/Fuel Gas	22.1	14.1	109.9	9.2	7.5	14.7

[a] The fuel rates and types are obtained from U.S. DOI, 1977, and Colony Development Operation, 1977, except the fuel savings due to decreased steam load and substitution of Stretford in place of amine/Claus/Wellman-Lord required that the fuels to the ball heater be redistributed. The fuel savings are equivalent to 600 BPSD of crude oil.

[b] The quantity of NOx is that calculated from the fuel based nitrogen only.

[c] The quantity of SO_2 is that remaining after absorption on the shale. The quantity of NOx includes fixation of atmospheric nitrogen less any NOx absorbed on the shale.

Source: DRI estimates based on data from Colony Development Operation, 1977, and U.S. DOI, 1977.

TABLE 4.2-24. MATERIALS BALANCE FOR THE CLAUS UNIT
(Streams 43, 56, 57, 83, 128)

Component	MWt	Mass Flow, lb/hr						
		Acid Gas (Stream 56)	Tail Gas Recycle (Stream 83)	Ammonia Recovery O.H. (Stream 128)	Total Feed	Incinerator Air (Stream 43)	Total After Incinerator	Tail Gas (Stream 57)
H_2S	34	12,281	--	5,335	17,616	--	12,335	617
SO_2	64	--	1,604	--	1,604	--	11,609	580
COS	60	60	--	--	60	--	--	--
CO_2	44	78,280	--	--	78,280	--	78,324	78,324
H_2O	18	194	90	3,172	3,456	207	6,549	12,752
N_2	28	--	--	--	--	25,057	25,080	25,080
O_2	32	--	--	--	--	7,610	--	--
NH_3	17	--	--	56	56	--	--	--
NO	30	--	--	--	--	--	49	49
TOTAL		90,815	1,694	8,563	101,072	32,874	133,946	117,402

Sulfur Recovered = 16,544 lb/hr (199 TPSD)*

* According to Colony, 193 TPSD of sulfur are recovered.

Source: SWEC estimates based on information from Pritchard Corp., September 14, 1981.

TABLE 4.2-25. MATERIALS BALANCE FOR THE WELLMAN-LORD UNIT
(Streams 46, 57, 79, 82, 83, 86)

Component	MWt	Mass Flow, lb/hr						
		Tail Gas (Stream 57)	Incineration Fuel Gas (Stream 46)	Incineration Air (Stream 79)	Total After Incineration	Condensate[a] (Stream 86)	Tail Gas Recycle (Stream 83)	Flue Gas (Stream 82)
H_2S	34	617	1	--	--	--	--	--
SO_2	64	580	--	--	1,743	--	1,604	139[b]
COS	60	--	3	--	--	--	--	--
H_2	2	--	123	--	--	--	--	--
CO	28	--	289	--	--	--	--	--
CO_2	44	78,324	27	--	89,756	--	--	89,756
CH_4	16	--	1,812	--	--	--	--	--
C_2H_4	28	--	1,187	--	--	--	--	--
C_2H_6	30	--	689	--	--	--	--	--
C_3H_6	42	--	46	--	--	--	--	--
C_3H_8	44	--	23	--	--	--	--	--
H_2O	18	12,752	--	541	21,667	21,577	90	19,757[c]
N_2	28	25,080	--	65,468	90,548	--	--	90,548
O_2	32	--	--	19,884	3,732	--	--	3,732
NO	30	49	--	--	49	--	--	49[b]
TOTAL		117,402	4,200	85,893	207,495	21,577	1,694	203,981

[a] The Wellman-Lord condensate may contain an unknown amount of sulfur acids which are neutralized with caustic before disposal.

[b] The values for SO_2 and NO do not agree with the values in the Colony PSD permit (94.5 lb/hr and 0 lb/hr for SO_2 and NO, respectively).

[c] The moisture in the flue gas results from the evaporation of the $NaHSO_3$ solution.

Source: SWEC estimates based on information from U.S. EPA, January 1975.

TABLE 4.2-26. INORGANIC SPECIES IN TOSCO II FOUL WATER
(Stream 29)

Component	Concentration, mg/l
Ca^{++}	6
Mg^{++}	2
Na^{+}	5
K^{+}	0.4
HCO_3^-	--
$CO_3^{=}$	--
Cl^-	5
F^-	0.3
$S_2O_3^{=}$	--
CN^-	12
Si	1.3
Other Components	**Range, mg/l**
Fe	1 - 10
B	0.1 - 1.0
Ce, Ag, Sr, Rb, Br, Se, As, Zn, Cu, Ni, Mn, Ti, P, Al	0.01 - 0.1
Pb, Ba, Mo, Zr, Co, Cr, Li	0.001 - 0.01

Source: Haas, June 1979.

TABLE 4.2-27. ORGANIC CONTENT OF GAS CONDENSATE (FOUL WATER)
(Stream 29)

Component	Concentration, mg/l	Mass % of Organics
Acids	1,710	39
Phenols	510	12
Bases	680	16
Neutrals	1,424	33
TOTAL	4,324	100
TOC	3,160	73

Source: Metcalf & Eddy Engineers, October 1975.

A small amount of moisture is also removed from the retort gas during compressing and after-cooling operations in the gas recovery and treating section, and this is added to the earlier foul water. Wash water from the coking operation is the last source of foul water. The composition of this water has been estimated from analyses of bottoms oil and coked products. Table 4.2-28 presents the composition along with the gas condensate composition and the resulting combined foul water stream composition. The material balance around the foul water steam stripper is given in Table 4.2-29.

The sour water is obtained from the hydrotreaters by washing the hydrogenated naphtha and gas oil with wash water. Most of the organically bound nitrogen, oxygen, and sulfur are reduced to ammonia, water, and hydrogen sulfide, respectively, during the hydrotreating operation and are dissolved in the wash water to form the sour water. The potential amounts of NH_3 and H_2S formed are calculated from the nitrogen and sulfur contents of the naphtha and gas oil before and after hydrotreating. Sour water is processed by the ammonia recovery unit to obtain ammonia and hydrogen sulfide. Most of the processed sour water is recycled back to the hydrotreaters, but a small bleed stream is blown down and combined with the stripped foul water. In Case Study C, the overhead vapors from the foul water stripper (which are normally fed to the Claus process) are added to the ammonia recovery system. This increases the ammonia by-product production from 135 TPSD to 143 TPSD. The compositions of the sour water, processed sour water, and ammonia recovery overhead vapors are presented in Tables 4.2-30 and 4.2-31.

4.2.8 Stripped Foul Water Treatment

One technology for cleaning the foul water after stripping--biological oxidation--was examined. This standard treatment technology provides some

TABLE 4.2-28. COMPOSITION OF FOUL WATER
(Streams 29, 31, 99)

Component	Amount in Raw Shale[a] lb/ton	Foul Water Flow (Stream 29) lb/hr (gpm)	Coker Wash Water Flow[b] (Stream 99) lb/hr (gpm)	Total Foul Water (Stream 31) lb/hr (gpm)	mg/l
NH_3	0.28	770	--	770	3,088
H_2S	0.036	99	386	485	1,945
CO_2	0.34	935	--	935	3,749
Organic Acids	0.155	426	--	426	1,710
Organic Phenols	0.046	127	--	127	510
Organic Bases	0.062	170	--	170	680
Organic Neutrals	0.129	355	--	355	1,424
H_2O	--	213,300 (426)	36,050 (72)	249,350 (498)	--
TOTAL		216,182	36,436	252,618	

[a] Pilot plant data obtained from Metcalf & Eddy Engineers, October 1975.

[b] Estimated from material balances based on data from Colony Development Operation, 1974, and Whitcombe and Vawter, March 1975.

Source: DRI estimates based on data from Colony Development Operation, 1974, Metcalf & Eddy Engineers, October 1975, and Whitcombe and Vawter, March 1975.

TABLE 4.2-29. MATERIAL BALANCE AROUND FOUL WATER STEAM STRIPPER
(Streams 31, 37, 38)

Component	Foul Water (Stream 31) Concentration, mg/l	Foul Water (Stream 31) Flow, lb/hr (gpm)	Stripped Foul Water (Stream 38) Concentration, mg/l	Stripped Foul Water (Stream 38) Flow, lb/hr (gpm)	Overhead Vapors (Stream 37) Flow, lb/hr (gpm)
NH_3	3,088	770	200	48	722
CO_2	3,749	935	--	--	935
H_2S	1,945	485	4	1	481
Organics	4,324	1,078	2,300	539*	539*
H_2O	--	249,350 (498)	--	233,915 (468)	15,435 (30)
TOTAL		252,618		234,503	18,112

* Assuming 50% of the organics are stripped in the refluxed tower.

Source: WPA estimates based on data from Metcalf & Eddy Engineers, October 1975.

TABLE 4.2-30. MATERIAL BALANCE AROUND AMMONIA RECOVERY UNIT, CASE STUDIES A AND B*
(Streams 110, 124, 128, 131, 132, 133)

Component	Sour Water (Streams 110 and 124) Concentration, mg/l	Sour Water (Streams 110 and 124) Flow, lb/hr (gpm)	Stripped Sour Water (Streams 131, 132, 133) Concentration, mg/l	Stripped Sour Water (Streams 131, 132, 133) Flow, lb/hr (gpm)	Ammonia Recovery Overhead (Stream 128) Flow, lb/hr (gpm)
NH_3	44,170	11,280	64	16.1	56
H_2S	20,910	5,340	19	4.8	5,335
H_2O	--	255,120 (510)	--	251,948 (504)	3,172 (6)
TOTAL		271,740		251,969	8,563

Ammonia Recovered = 11,208 lb/hr (135 t/d)

* Based on use of the Phosam-W ammonia recovery process.

Source: WPA estimates based on data provided by U.S.S. Engineers and Consultants, Inc., April 1978.

TABLE 4.2-31. MATERIAL BALANCE AROUND AMMONIA RECOVERY UNIT, CASE STUDY C[a]
(Streams 37, 110, 124, 128, 131, 132, 133)

Component	Sour Water (Streams 110, 124) Concentration, mg/l	Sour Water (Streams 110, 124) Flow, lb/hr (gpm)	Foul Water Stripper Overhead (Stream 37) Flow, lb/hr (gpm)	Stripped Sour Water (Streams 131, 132, 133) Concentration, mg/l	Stripped Sour Water (Streams 131, 132, 133) Flow, lb/hr (gpm)	Ammonia Recovery Overhead (Stream 128) Flow, lb/hr (gpm)
NH_3	44,170	11,280	722	64	17.1	60
H_2S	20,910	5,340	481	19	5.2	5,816
CO_2	--	--	935	--	--	935
Organics[b]	--	--	539	404	108	431
H_2O	--	255,120 (510)	15,435 (30)	--	267,191 (534)	3,364 (7)
TOTAL		271,740	18,112		267,321	10,606

Ammonia Recovered = 11,925 lb/hr (143 t/d)

[a] Based on use of the Phosam-W ammonia recovery process.

[b] Assuming 20% of the organics are absorbed in the Phosam solution and returned to the sour water.

Source: WPA estimates based on data provided by U.S.S. Engineers and Consultants, Inc., April 1978.

additional control of organics prior to use of the water for processed shale moistening. Table 4.2-32 presents the material balance for the biological oxidation plant; it shows that the overall organics destruction possible by biological processes is expected to be less than 50% efficient.

4.3 POLLUTANT CROSS-REFERENCE TABLES

Tables 4.3-1 through 4.3-3 list some pollutants of concern, by medium, and provide a cross-reference to the numbered streams in this manual. Many of these pollutants are trace constituents, and measurements to identify or quantify them in oil shale processing related streams have never been made. Those pollutants which have been identified in the plant streams are cross-referenced to the detailed composition tables. Engineering judgment was used in identifying other probable pollutants. The entry for "unknown" (U) indicates that no testing has been done and the presence of the pollutant is unlikely. Judgment was also used in specifying the pollutants which definitely should not be present.

TABLE 4.2-32. COMPOSITION OF FOUL WATER AFTER BIOLOGICAL OXIDATION
(Streams 38, 136)

Component	Stripped Foul Water (Stream 38)		Bio-Treated Effluent[a] (Stream 136)	
	Concentration, mg/l	Flow, lb/hr (gpm)	Concentration, mg/l	Flow, lb/hr (gpm)
NH_3	200	48	--	N.D.
H_2S	4	1	--	N.D.
Organics	2,300 [2,950][b]	539 [690]	937 [300]	296 [69]
H_2O	--	233,915 (468)	--	230,428 (460)
TOTAL		234,503		230,724

[a] A sludge stream containing 8 gpm water is discarded on the processed shale.

[b] Values in brackets [ ] are the BOD content of the organics. Approximately 50% of the organics are assumed to be biodegradable at an efficiency of 90%, for an overall removal efficiency of 45%.

Source: WPA estimates based on data from Hicks and Wei, December 1980.

TABLE 4.3-1. POLLUTANT CROSS-REFERENCE FOR GASEOUS STREAMS

		Pollutants															
Stream No.	Table No.	CO	NO_x	SO_x	TPM	O_3	As	Be	Hg	Fluorides	H_2SO_4 Mist	H_2S	Pb	Total Reduced Sulfur	Vinyl Chloride	Polynuclear Organic Matter	Asbestos
2*		U	U	U	Y	U	U	U	U	U	N	P	U	P	N	P	N
3*		U	U	U	Y	U	U	U	U	U	N	P	U	P	N	P	N
4*		U	U	U	Y	U	U	U	U	U	N	P	U	P	N	P	N
5*		U	U	U	Y	U	U	U	U	U	N	P	U	P	N	P	N
6*		U	U	U	Y	U	U	U	U	U	N	P	U	P	N	P	N
7*		U	U	U	Y	U	U	U	U	U	N	P	U	P	N	P	N
8*		U	U	U	Y	U	U	U	U	U	N	P	U	P	N	P	N
10*		U	U	U	Y	U	U	U	U	U	N	P	U	P	N	P	N
11*		N	N	N	N	N	N	N	N	N	N	N	N	N	N	N	N
13		N	N	N	N	N	N	N	N	N	N	N	N	N	N	N	N
14		N	N	N	N	N	N	N	N	N	N	N	N	N	N	N	N
15		N	N	N	N	N	N	N	N	N	N	N	N	N	N	N	N
16		N	N	N	N	N	N	N	N	N	N	N	N	N	N	N	N
17		Y	Y	Y	P	N	P	U	U	U	U	P	Y	U	Y	P	N
18*	4.2-22, 4.2-23	Y	Y	Y	Y	U	U	U	U	U	N	N	U	N	N	N	N
19*	4.2-22, 4.2-23	Y	Y	Y	Y	U	U	U	U	U	N	N	U	N	N	N	N
20*		U	U	U	Y	U	U	U	U	U	N	N	U	N	N	N	N
24	4.2-22, 4.2-23	Y	Y	Y	Y	U	U	U	U	U	N	N	U	N	N	N	N
25		N	N	N	N	N	N	N	N	N	N	N	N	N	N	N	N
26		N	N	N	N	N	N	N	N	N	N	N	N	N	N	N	N
28	4.2-15	Y	Y	Y	P	N	P	U	U	U	U	Y	Y	U	N	N	N
32	4.2-17, 4.2-18, 4.2-19	Y	Y	Y	P	N	P	N	U	U	N	Y	U	Y	N	N	N
33	4.2-16, 4.2-18	Y	Y	Y	P	N	P	U	U	U	U	Y	Y	U	N	N	N
34	4.2-19	Y	Y	Y	P	N	P	U	U	U	U	Y	Y	U	N	N	N
35	4.2-17, 4.2-20, 4.2-21	P	P	P	N	N	U	N	U	U	N	Y	U	Y	N	N	N
36	4.2-20	P	P	P	N	N	U	N	U	U	N	Y	U	Y	N	N	N
37	4.2-29, 4.2-31	N	N	P	N	N	N	N	N	N	N	Y	N	Y	N	N	N
43	4.2-24	N	N	N	N	N	N	N	N	N	N	N	N	N	N	N	N
44		P	P	P	U	N	N	N	N	N	N	U	N	P	U	U	N
45		P	P	P	U	N	N	N	N	N	N	U	N	P	U	U	N
46	4.2-25	P	P	P	U	N	N	N	N	N	N	U	N	P	U	U	N

(Continued)

TABLE 4.3-1 (cont.)

Stream No.	Table No.	Pollutants															
		CO	NO_x	SO_x	TPM	O_3	As	Be	Hg	Fluorides	H_2SO_4 Mist	H_2S	Pb	Total Reduced Sulfur	Vinyl Chloride	Polynuclear Organic Matter	Asbestos
47		P	P	P	U	N	N	N	N	N	N	U	N	P	U	U	N
48		P	P	P	U	N	N	N	N	N	N	U	N	P	U	U	N
49		P	P	P	U	N	N	N	N	N	N	U	N	P	U	U	N
50		P	P	P	U	N	N	N	N	N	N	U	N	P	U	U	N
51		P	P	P	U	N	N	N	N	N	N	U	N	P	U	U	N
52		P	P	P	U	N	N	N	N	N	N	U	N	P	U	U	N
53		P	P	P	U	N	N	N	N	N	N	U	N	P	U	U	N
56	4.2-24	P	U	U	N	N	N	N	N	N	N	Y	N	Y	N	N	N
57	4.2-24, 4.2-25	Y	Y	Y	P	N	N	N	N	N	P	Y	N	Y	N	N	N
58		N	N	N	N	N	N	N	N	N	N	N	N	N	N	N	N
61		N	N	N	N	N	N	N	N	N	N	N	N	N	N	N	N
63		P	P	P	U	N	N	N	N	N	N	U	N	P	U	U	N
64		P	P	P	U	N	N	N	N	N	N	U	N	P	U	U	N
65		P	P	P	U	N	N	N	N	N	N	U	N	P	U	U	N
66		P	P	P	U	N	N	N	N	N	N	U	N	P	U	U	N
67		P	P	P	U	N	N	N	N	N	N	U	N	P	U	U	N
68		P	P	P	U	N	N	N	N	N	N	U	N	P	U	U	N
69		P	P	P	U	N	N	N	N	N	N	U	N	P	U	U	N
70		P	P	P	U	N	N	N	N	N	N	U	N	P	U	U	N
71		P	P	P	U	N	N	N	N	N	N	U	N	P	U	U	N
72	4.2-21	P	P	P	U	N	N	N	N	N	N	U	N	P	U	U	N
75		P	P	P	N	U	N	N	N	N	N	U	N	U	N	N	N
79	4.2-25	N	N	N	N	N	N	N	N	N	N	N	N	N	N	N	N
82*	4.2-25	Y	Y	Y	Y	N	N	N	N	N	N	N	N	U	N	N	N
83	4.2-24, 4.2-25	Y	Y	Y	P	N	P	N	U	U	N	Y	U	Y	N	N	N
85		N	N	N	N	N	N	N	N	N	N	N	N	N	N	N	N
91*	4.2-22, 4.2-23	P	P	P	P	N	N	N	N	N	N	P	P	P	N	N	N
92		Y	Y	Y	P	N	P	N	U	U	N	Y	U	Y	N	N	N
95		N	N	N	N	N	N	N	N	N	N	N	N	N	N	N	N
96		N	N	N	N	N	N	N	N	N	N	N	N	N	N	N	N
97*		P	P	P	N	N	N	N	N	N	N	P	P	P	N	N	N
98		Y	Y	Y	P	N	P	U	U	U	U	N	Y	U	Y	N	N

(Continued)

TABLE 4.3-1 (cont.)

Stream No.	Table No.	Pollutants															
		CO	NO_x	SO_x	TPM	O_3	As	Be	Hg	Fluorides	H_2SO_4 Mist	H_2S	Pb	Total Reduced Sulfur	Vinyl Chloride	Polynuclear Organic Matter	Asbestos
104*	4.2-22, 4.2-23	P	P	P	P	N	N	N	N	N	N	P	P	P	N	N	N
106		Y	Y	Y	P	N	P	U	U	U	U	N	Y	U	Y	N	N
118*	4.2-22, 4.2-23	P	P	P	P	N	N	N	N	N	N	P	P	P	N	N	N
119*	4.2-22, 4.2-23	P	P	P	P	N	N	N	N	N	N	P	P	P	N	N	N
121		Y	Y	Y	P	N	P	U	U	U	U	N	Y	U	Y	N	N
125*	4.2-22, 4.2-23	P	P	P	P	N	N	N	N	N	N	P	P	P	N	N	N
128	4.2-19, 4.2-24, 4.2-30, 4.2-31	N	N	N	N	N	N	N	N	N	N	Y	N	Y	N	N	N
135		N	N	N	N	U	N	N	N	N	N	N	N	N	N	N	N
138*		Y	Y	Y	Y	N	N	N	N	N	N	N	N	P	N	U	N
139*		N	N	N	N	N	P	P	P	P	N	N	P	U	N	P	N
159		N	N	N	N	N	N	N	N	N	N	N	N	N	N	N	N
160		N	N	N	N	N	N	N	N	N	N	N	N	N	N	N	N
161		N	N	N	N	N	N	N	N	N	N	N	N	N	N	N	N
162		N	N	N	N	N	N	N	N	N	N	N	N	N	N	N	N
163		N	N	N	N	N	N	N	N	N	N	N	N	N	N	N	N
164		N	N	N	N	N	N	N	N	N	N	N	N	N	N	N	N
165		N	N	N	N	N	N	N	N	N	N	N	N	N	N	N	N
166		N	N	N	N	N	N	N	N	N	N	N	N	N	N	N	N
167		N	N	N	N	N	N	N	N	N	N	N	N	N	N	N	N
173*		N	N	N	N	N	N	N	N	N	N	N	N	N	N	N	N
174*		N	N	N	N	N	N	N	N	N	N	N	N	N	N	N	N
179*	4.2-22, 4.2-23	Y	Y	Y	Y	N	N	N	N	N	N	N	N	P	N	U	N

* Indicates streams that come into contact with the environment.

Key: Y = Present
N = Not Present
P = Probably Present
U = Presence Unknown

Source: DRI estimates.

TABLE 4.3-2. POLLUTANT CROSS-REFERENCE FOR LIQUID STREAMS

Stream No.	Table No.	Pollutants																		
		Al	As	B	Cd	Cr	Co	F	Hg	Ni	Pb	Ra	V	Zn	NH_3	COD	TOC	Phenols	TDS	TSS
12*	4.2-5	P	P	P	P	P	P	P	P	P	P	P	P	P	P	Y	Y	P	Y	Y
21*		P	P	P	P	P	P	P	P	P	P	P	P	P	P	Y	Y	P	Y	Y
22*		P	P	P	P	P	P	P	P	P	P	P	P	P	P	Y	Y	P	Y	Y
23*		P	P	P	P	P	P	P	P	P	P	P	P	P	P	Y	Y	P	Y	Y
29	4.2-26, 4.2-27, 4.2-28	N	U	N	N	N	N	U	U	N	N	N	N	N	Y	Y	Y	Y	Y	P
30		N	U	N	N	N	N	U	U	N	N	N	N	N	Y	Y	Y	Y	Y	P
31	4.2-28, 4.2-29	N	U	N	N	N	N	U	U	N	N	N	N	N	Y	Y	Y	Y	Y	P
38*	4.2-29, 4.2-32	N	U	N	N	N	N	U	U	N	N	N	N	N	Y	Y	Y	P	Y	P
39		N	N	N	N	N	N	N	N	N	N	N	N	N	N	N	N	N	N	N
40	4.2-12	N	P	N	N	N	N	U	U	N	N	N	N	N	N	Y	Y	P	N	P
41	4.2-12	N	P	N	N	N	N	U	U	N	N	N	N	N	N	Y	Y	Y	N	P
42	4.2-12	N	P	N	N	N	N	U	U	N	N	N	N	N	N	Y	Y	Y	P	P
54		N	U	N	N	N	N	N	N	N	N	N	N	N	N	P	P	N	N	N
55		N	U	N	N	N	N	N	N	N	N	N	N	N	N	P	P	N	N	N
59		N	N	N	N	N	N	N	N	N	N	N	N	N	N	N	N	N	N	N
60	4.2-14	N	U	N	N	U	N	N	N	N	N	N	P	N	N	N	N	N	N	N
73		N	U	N	N	N	N	N	N	N	N	N	N	N	N	P	P	N	N	N
74		N	U	N	N	N	N	N	N	N	N	N	N	N	N	P	P	N	N	N
76*		N	N	N	N	N	N	N	N	N	N	N	Y	N	N	Y	Y	N	Y	P
77	4.2-14	N	U	N	N	N	N	N	N	N	N	N	P	N	N	N	N	N	N	N
78		N	N	N	N	N	N	N	N	N	N	N	N	N	N	N	N	N	N	N
80		N	N	N	N	N	N	N	N	N	N	N	N	N	N	N	N	N	N	N
84		N	N	N	N	N	N	N	N	N	N	N	N	N	N	N	N	N	N	N
86*	4.2-25	N	U	N	N	N	N	U	U	N	N	N	N	N	N	P	P	U	U	P
93		N	N	N	N	N	N	N	N	N	N	N	N	N	N	N	N	N	N	N
99	4.2-28	N	U	N	N	N	N	U	U	N	N	N	N	N	Y	Y	Y	Y	Y	P
100		N	U	N	N	N	N	U	U	N	N	N	N	N	N	Y	Y	P	N	N
101		N	U	N	N	N	N	U	U	N	N	N	N	N	N	Y	Y	P	N	N
102		N	N	N	N	N	N	N	N	N	N	N	N	N	N	N	N	N	N	N
107		N	U	N	N	N	N	N	U	N	N	N	N	N	Y	Y	Y	Y	P	P
108	4.2-14	N	U	N	N	N	N	U	U	N	N	N	N	N	N	Y	Y	P	N	N
110	4.2-30, 4.2-31	N	U	N	N	N	N	U	U	N	N	N	N	N	Y	Y	Y	Y	Y	P

(Continued)

TABLE 4.3-2 (cont.)

Stream No.	Table No.	Pollutants																		
		Al	As	B	Cd	Cr	Co	F	Hg	Ni	Pb	Ra	V	Zn	NH_3	COD	TOC	Phenols	TDS	TSS
111		N	U	N	N	N	N	U	U	N	N	N	N	N	N	Y	Y	P	N	N
112		N	U	N	N	N	N	U	U	N	N	N	N	N	N	Y	Y	P	N	N
113		N	U	N	N	N	N	U	U	N	N	N	N	N	N	Y	Y	P	N	N
114		N	U	N	N	N	N	U	U	N	N	N	N	N	N	Y	Y	P	N	N
115		N	U	N	N	N	N	U	U	N	N	N	N	N	N	Y	Y	P	N	N
116		N	U	N	N	N	N	U	U	N	N	N	N	N	N	Y	Y	P	N	N
117	4.2-13	N	U	N	N	N	N	U	U	N	N	N	N	N	N	Y	Y	P	N	N
123	4.2-13	N	U	N	N	N	N	U	U	N	N	N	N	N	N	Y	Y	P	N	N
124	4.2-30, 4.2-31	N	U	N	N	N	N	U	U	N	N	N	N	N	Y	Y	Y	Y	Y	P
126		N	N	N	N	N	N	N	N	N	N	N	N	N	N	N	N	N	Y	N
127		N	N	N	N	N	N	N	N	N	N	N	N	N	N	N	N	N	N	N
129	4.2-14	N	N	N	N	N	N	N	N	N	N	N	N	N	Y	N	N	N	N	N
130		N	N	N	N	N	N	N	N	N	N	N	N	N	N	N	N	N	N	N
131	4.2-30, 4.2-31	N	U	N	N	N	N	U	U	N	N	N	N	N	Y	Y	Y	P	P	N
132	4.2-30, 4.2-31	N	U	N	N	N	N	U	U	N	N	N	N	N	Y	Y	Y	P	P	N
133*	4.2-30, 4.2-31	N	U	N	N	N	N	U	U	N	N	N	N	N	Y	Y	Y	P	P	N
136*	4.2-32	N	U	N	N	N	N	U	U	N	N	N	N	N	P	Y	Y	P	Y	P
137*		N	U	N	N	N	N	U	U	N	N	N	N	N	P	Y	Y	Y	Y	Y
140*		P	P	P	P	P	P	P	P	P	P	P	P	P	P	Y	P	P	Y	Y
141		P	P	P	P	P	P	P	P	P	P	P	P	P	P	Y	P	P	Y	N
142		P	P	P	P	P	P	P	P	P	P	P	P	P	P	Y	P	P	Y	N
143		P	P	P	P	P	P	P	P	P	P	P	P	P	P	Y	P	P	Y	N
144		P	P	P	P	P	P	P	P	P	P	P	P	P	P	Y	P	P	Y	N
145		P	P	P	P	P	P	P	P	P	P	P	P	P	P	Y	P	P	Y	N
146		P	P	P	P	P	P	P	P	P	P	P	P	P	P	Y	P	P	Y	N
147*		P	P	P	P	P	P	P	P	P	P	P	P	P	P	Y	P	P	Y	N
148*		P	P	P	P	P	P	P	P	P	P	P	P	P	P	Y	P	P	Y	N
149*		P	P	P	P	P	P	P	P	P	P	P	P	P	P	Y	P	P	Y	N
150*		P	P	P	P	P	P	P	P	P	P	P	P	P	P	Y	P	P	Y	N
151		P	P	P	P	P	P	P	P	P	P	P	P	P	P	Y	P	P	Y	N
152		P	P	P	P	P	P	P	P	P	P	P	P	P	P	Y	P	P	Y	N
153		P	P	P	P	P	P	P	P	P	P	P	P	P	P	Y	P	P	Y	N

(Continued)

TABLE 4.3-2 (cont.)

Stream No.	Table No.	Pollutants																		
		Al	As	B	Cd	Cr	Co	F	Hg	Ni	Pb	Ra	V	Zn	NH_3	COD	TOC	Phenols	TDS	TSS
154		P	P	P	P	P	P	P	P	P	P	P	P	P	P	Y	P	P	Y	N
155		P	P	P	P	P	P	P	P	P	P	P	P	P	P	Y	P	P	Y	N
156		P	P	P	P	P	P	P	P	P	P	P	P	P	P	Y	P	P	Y	N
157		P	P	P	P	P	P	P	P	P	P	P	P	P	P	Y	P	P	Y	N
158*		P	P	P	P	P	P	P	P	P	P	P	P	P	P	Y	Y	P	Y	P
168*		P	P	P	P	P	P	P	P	P	P	P	P	P	N	Y	P	Y	Y	P
169*		P	P	P	P	P	P	P	P	P	P	P	P	P	N	Y	Y	P	Y	Y
170*		P	P	P	P	P	P	P	P	P	P	P	P	P	N	P	P	P	P	N
171*		P	P	P	P	P	P	P	P	P	P	P	P	P	N	Y	P	P	Y	N
172		P	P	P	P	P	P	P	P	P	P	P	P	P	P	Y	P	P	Y	N
175*		P	P	P	P	P	P	P	P	P	P	P	P	P	N	Y	P	P	Y	Y
176*		P	P	P	P	P	P	P	P	P	P	P	P	P	N	Y	Y	P	Y	Y
177*		P	P	P	P	P	P	P	P	P	P	P	P	P	P	Y	Y	Y	Y	Y
178*	4.2-9, 4.2-10, 4.2-11	P	P	P	P	P	P	P	P	P	P	P	P	P	P	Y	Y	P	Y	Y

* Indicates streams that come into contact with the environment.

Key: Y = Present
N = Not Present
P = Probably Present
U = Presence Unknown

Source: DRI estimates.

TABLE 4.3-3. POLLUTANT CROSS-REFERENCE FOR SOLID STREAMS

Stream No.	Table No.	Pollutants/Hazards														
		Ag	As	Ba	Cd	Cr	Hg	Pb	Se	Pesti-cides	Ignit-ability	Corro-sivity	Reactivity, Explo.	Radio Activity	Phyto-toxicity	Mutageni-city
1*	4.2-2, 4.2-3, 4.2-4	Y	Y	Y	Y	Y	Y	Y	Y	N	P	N	U	P	U	U
9*		Y	Y	Y	Y	Y	Y	Y	Y	N	P	N	U	P	U	U
27*	4.2-6, 4.2-7, 4.2-8	Y	Y	Y	Y	Y	Y	Y	Y	N	P	N	U	P	U	U
62		N	N	N	N	N	N	N	N	N	N	P	N	N	P	P
81		N	N	N	N	N	N	N	N	N	N	U	N	N	P	U
87		N	N	N	N	U	N	N	N	N	U	U	U	U	U	U
88		N	N	N	N	N	N	N	N	N	N	U	N	N	U	N
89		N	N	N	N	Y	N	N	N	N	N	U	N	N	N	N
90		N	N	N	N	N	N	N	N	N	N	U	N	N	N	N
94*		N	Y	N	N	Y	N	N	N	N	N	U	N	N	N	N
103*	4.2-14	N	P	N	N	N	N	N	N	N	P	U	N	N	N	U
105		N	N	N	N	U	N	N	N	N	N	U	N	N	N	N
109*		N	P	N	N	P	N	N	N	N	U	U	N	N	U	U
120		N	N	N	N	U	N	N	N	N	N	U	N	N	N	N
122*		N	P	N	N	P	N	N	N	N	U	U	N	N	U	U
134		N	N	N	N	N	N	N	N	N	Y	P	P	N	N	N

* Indicates streams that come into contact with the environment.

Key: Y = Present
N = Not Present
P = Probably Present
U = Presence Unknown

Source: DRI estimates.

SECTION 5

POLLUTION CONTROL TECHNOLOGY

This section presents an inventory of pollution control technologies and discusses, in depth, some representative controls for each medium (air, water and solid waste). The inventory expands beyond describing the technologies that have been proposed by developers of the TOSCO II process. That is, it discusses alternate and additional technologies that provide varying levels of control. Although the inventory is quite extensive, other possibilities may exist and should not be excluded from consideration. Changes in the design of the plant complex, changes in the assumptions made (see Section 1.5), and/or improved data from future testing could lead to the selection of different controls.

Each subject area for control (e.g., particulate control) begins with an inventory of available technical approaches, or technologies. Promising new control technologies not yet applied commercially, even in related industries, are also included in the inventory but are not described in detail. Such new technologies may be applicable to the oil shale industry if they are sufficiently developed and tested in the future. The inventory is followed by a discussion of the most important considerations in selecting a control. Finally, a more detailed analysis of performance and cost is presented for the control technologies that have been considered by Colony Development Operation in conjunction with the TOSCO II process (see Sections 2 and 3 for descriptions of the case studies which include the proposed processes and technologies).

The detailed analysis seeks to estimate pollution control performance and cost. Performance estimates generally require no more than conceptual designs; however, the reliability of the performance estimates varies depending upon the application. The estimates should be highly reliable where a proven technology is applied to a stream for which experience exists (e.g., flue gas desulfurization) but may be much less accurate for controls which require testing and which are applied to unconventional streams (e.g., biological oxidation). All performance levels are given for instantaneous control and reflect optimal operation, which may be higher than the average level of performance actually achieved. All cost estimates are in mid-1980 dollars and are taken to the level of detail believed to be necessary to achieve ±30% accuracy. This level of accuracy is based on the cost of equipment already built and operating in related industries.

5.1 AIR POLLUTION CONTROL

As in other industrial and oil shale operations, the TOSCO II plant--from mining activities to final product storage and transfer--will generate particulate and gaseous component emissions. The primary air emissions are:

- Particulates, TPM
- Sulfur Dioxide, SO_2
- Nitrogen Oxides, NOx
- Carbon Monoxide, CO
- Hydrocarbons, HC.

This section describes the current, commercially available alternative systems for controlling the above primary pollutants. The following subsections provide inventories of control technologies for each of the air pollutants, a discussion of advantages and disadvantages, and important points to consider in selecting a particular technology. Performance, design, and cost data for the leading technologies examined are also presented.

5.1.1 Particulate Control

Particulate matter is generated during the mining, crushing, conveying, and processing of oil shale. Particulates are emitted from fugitive sources such as conveyor belts and from point sources such as flue gas stacks. Federal and State standards and regulations limit these particulate emissions because of their potentially hazardous effects on human health and the environment.

Inventory of Control Technologies--

As shown in Figure 5.1-1, particulate control can be divided into two general categories:

- Control of point sources
- Control of fugitive sources.

The particulate matter from a point source is confined within some equipment boundaries and is controlled by passing the dust-laden stream through a control device. Fugitive particulate matter is unconfined and is generally controlled by wet suppression techniques which are generally not as efficient as the point source control techniques. Table 5.1-1 presents a listing and review of particulate control technologies.

Control of point sources. There are two primary classes of particulate control equipment for point sources: dry and wet. Both classes offer processes that are feasible for particulate control in oil shale applications. Dry dust collectors can only be used with dry dusts. Sticky particulates tend to clog the dry collector and reduce its performance. In such cases, wet collectors are used.

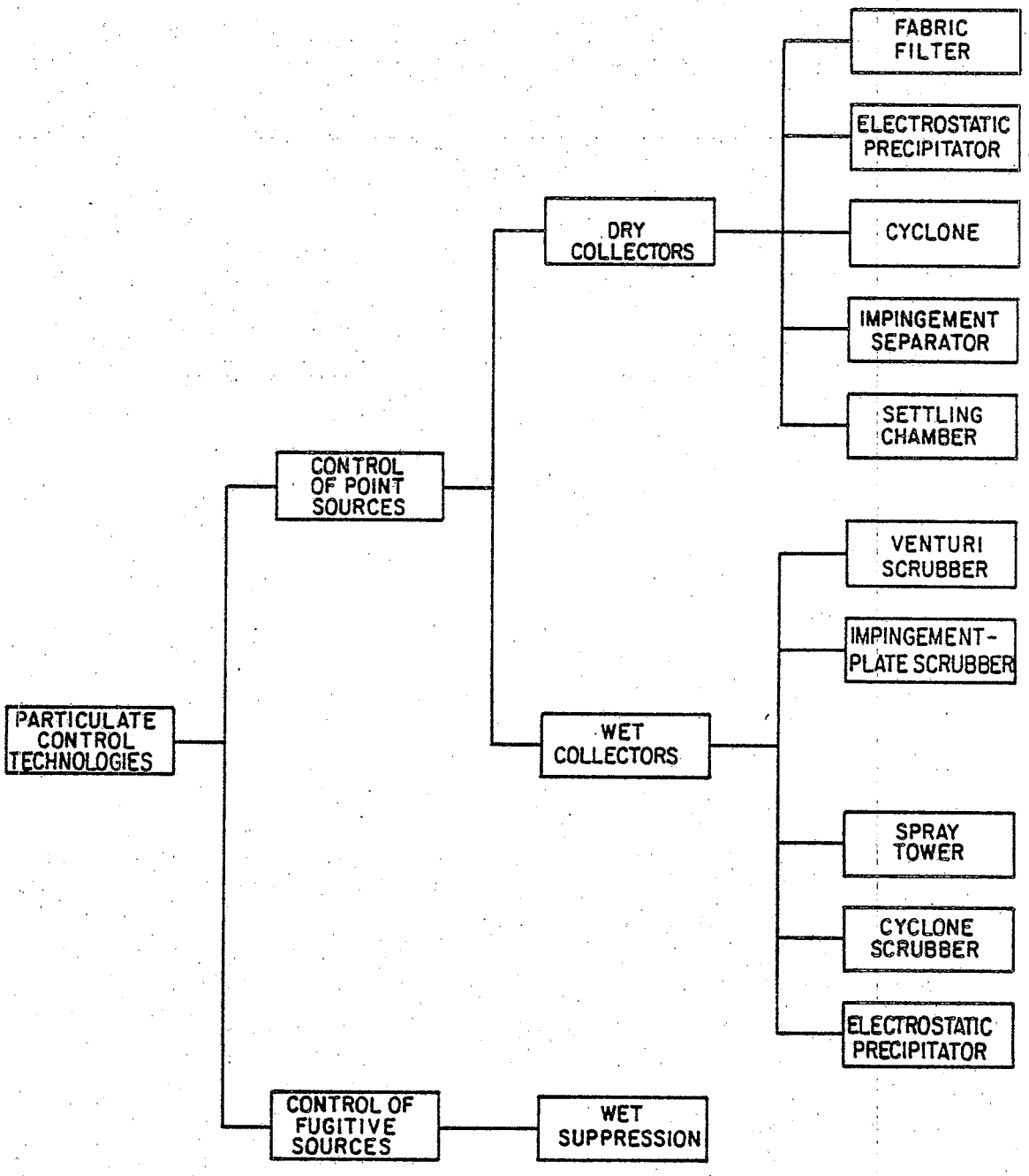

SOURCE: SWEC

FIGURE 5.1-1 PARTICULATE CONTROL TECHNOLOGIES

TABLE 5.1-1. KEY FEATURES OF PARTICULATE CONTROL TECHNOLOGIES

Control Technology	Operating Principle	Performance	Development Status	Advantages	Disadvantages
DRY COLLECTORS					
Fabric Filter	The dust-laden gas passes through woven fabric or felt material which filters out the dust, allowing the gas to pass on. The filters are cleaned by mechanical shaking or reverse jet compressed air flow.	Removal efficiency is 99.7-99.9%. Operating temperature is limited to 600°F, depending on the fabric material, and the pressure drop is typically 4 in. H_2O.	Commercially proven.	High removal efficiency and low operating cost.	The fabric can be sensitive to gas humidity, velocity and temperature, as well as particulate characteristics.
Electrostatic Precipitator	Particles suspended in a gas are exposed to gas ions in an electrostatic field. These particles then become charged and migrate under the action of the field to collector plates.	Removal efficiency is 99-99.9%. Operating temperature is limited to 850°F, and the pressure drop is typically 1 in. H_2O.	Commercially proven.	High removal efficiency and a very low pressure drop.	High energy consumption. Sensitive to varying process conditions and particle properties.
Cyclone	The dust-laden gas enters a cylindrical or conical chamber tangentially at one or more points and leaves through a central opening. The dust particles, because of their inertia, will tend to move toward the outside separator wall and then into a receiver.	Removal efficiency is 50-90%. Operating temperature is limited to 1,000°F, and the pressure drop is typically 1-5 in. H_2O.	Commercially proven.	Low capital and operating cost. Good as a gas precleaner before a more efficient removal device.	Low removal efficiency for small particles.
Impingement Separator	The dust-laden gas impinges on a body, and the gas is deflected while the dust particle, by virtue of its greater inertia, collects on the surface of the body.	Removal efficiency is 0-80%. Operating temperature is limited to 1,000°F, and the pressure drop is typically 4 in. H_2O.	Commercially proven.	Low capital and operating cost. Good as a gas precleaner before a more efficient removal device.	Low removal efficiency.
Settling Chamber	The simplest type of dust collection equipment, consisting of a chamber in which the gas velocity is reduced to enable dust to settle out by the action of gravity.	Removal efficiency is 0-50%. Operating temperature is limited to 1,000°F, and the pressure drop is typically 0.1 in. H_2O.	Commercially proven.	Low operating cost and a low pressure drop.	Low removal efficiency and a very large space requirement.

(Continued)

TABLE 5.1-1 (cont.)

Control Technology	Operating Principle	Performance	Development Status	Advantages	Disadvantages
WET COLLECTORS					
Venturi Scrubber	Gas and liquid are passed concurrently through a venturi throat at 200 to 800 ft/sec.	Removal efficiency is 95-99%. Operating temperature is limited to 40-700°F, and the pressure drop is typically 1-50 in. H_2O.	Commercially proven.	High removal efficiency.	Efficiency drops for small particles.
Impingement-Plate Scrubber	The high velocity gas passes through a perforated tray with an impingement baffle above each perforation. The gas atomizes the liquid on the tray into droplets which then collect the dust.	Removal efficiency is 80-99%. Operating temperature is limited to 40-700°F, and the pressure drop is typically 1-20 in. H_2O.	Commercially proven.	High removal efficiency.	Efficiency drops for small particles.
Spray Tower	Liquid droplets produced by spray nozzles settle through rising gas stream and remove dust by impaction.	Removal efficiency is 50-80%. Operating temperature is limited to 40-700°F, and the pressure drop is typically 0.5 in. H_2O.	Commercially proven.	Low pressure drop and a low operating cost.	Low removal efficiency.
Cyclone Scrubber	Liquid is sprayed into the gas stream and removes the dust particles by inertial impaction.	Removal efficiency is 50-75%. Operating temperature is limited to 40-700°F, and the pressure drop is typically 2 in. H_2O.	Commercially proven.	Low pressure drop and a low operating cost.	Low removal efficiency.
Electrostatic Precipitator	SEE DRY COLLECTORS				
Wet Suppression	Fugitive dust generated in the crushing and handling of the oil shale is sprayed with a foam suppressant made from a water/surfactant mixture.	Removal efficiency is 95-99%. Operating temperature is limited to 40-200°F.	Commercially proven.	Low capital and operating cost and a high removal efficiency.	Used only for conveyor transfer points and crushing and grinding operations.

Source: SWEC based on information from Research and Education Association, 1980.

Dry particulate removal from gases can be accomplished by several methods (shown in Figure 5.1-1 and reviewed in Table 5.1-1). The baghouse (fabric filter) collector operates by passing the dust-laden gas through a fabric network that acts as a dust filter. Its removal efficiency is over 99% and operating costs are low compared to other approaches. The electrostatic precipitator, which also has a high removal efficiency, affords separation of dust by passing the dust-laden gas through an electrostatic field. The dust particles become charged and migrate to collector plates. Another technique is the cyclone separator which operates on the principle of centrifugal force. The dust-laden gas enters the chamber tangentially. The dust particles have a higher inertia than the gas, so they travel to the wall of the cylindrical or conical chamber and then into a receptacle. The removal efficiency for cyclones varies from 50 to 90 percent. In the impingement process, the dust-laden gas impinges on a body which collects the particles as the gas deflects around the body. The removal efficiency is 0 to 80 percent. The simplest mechanical separator is the settling chamber. The dust just settles to the bottom of the tank due to its heavier mass, resulting in a removal efficiency from 0 to 50 percent.

Wet collectors require mixing the dust-laden gas with an aqueous solution that captures and removes the dust particles from the gas stream. Examples of such equipment are shown in Figure 5.1-1 and described in Table 5.1-1. In the venturi scrubber, the gas and liquid pass through a throat at a high velocity, promoting collisions between the dust and liquid droplets. These units require a high pressure drop (~50 in. H_2O) and have removal efficiencies of greater than 90 percent. Another wet scrubber, the impingement-plate type, consists of a perforated tray with an impingement baffle located above each perforation. A liquid level maintained over the trays collects the dust as the gas passes through it. These units are similar to the venturi scrubber and have about the same removal efficiencies; however, the process requires a larger pressure drop across the plates. Another type of wet scrubber is the spray tower; it utilizes countercurrent spraying of liquid droplets to remove the dust particles by impaction at an efficiency of 50 to 80 percent. The operation of the wet cyclone scrubber is similar to that of the dry cyclone except liquid is introduced into the gas stream, removing the dust by inertial impaction. The removal efficiency of the wet cyclone is 50 to 75 percent. The wet electrostatic precipitator operates under the same principle and at about the same efficiency as the dry precipitator.

<u>Control of fugitive sources</u>. Wet dust suppression can be used for the containment of fugitive dust. This process consists of spraying the dust source with water or a foam suppressant which traps the dust and prevents it from becoming airborne. The foam sprays are relatively inexpensive, consume less water than pure water sprays, and are very effective. In a foam spray system, foam is produced by pumping a mixture of water and a surfactant through an air atomizing nozzle which produces small bubbles of approximately 100 to 200 microns. These wet bubbles are broken by contact with dust, coating the particle. The foam is only effective when applied directly to the source, such as on a conveyor, or to a falling stream of material, such as at a conveyor transfer point. Once the wetted dust agglomerates with other particles, it no longer becomes airborne at subsequent transfer points.

The suppression (or removal) efficiency is 95 to 99% in terms of the material contacted.

Paving the heavily traveled roads with a hard surface and providing vegetative covers for the disturbed areas are additional technologies for reducing fugitive dust emissions. These technologies are described in Section 5.3.

Particulate Control Technologies Analyzed--

The TOSCO II plant has two major areas where particulate matter is produced and must be controlled: (1) raw shale mining, crushing, conveying, and storage, and (2) shale pyrolysis.

Dry dust is generated at point sources, such as the primary and secondary crushers, and at the enclosed fine ore storage area. For these point sources, baghouses were examined for particulate removal due to their high removal efficiency, relatively low operating costs, and the dry nature of the particulate.

The flow rates and particulate removal efficiencies reported by Colony (Colony Development Operation, 1977) were used as the design basis for estimating the size and cost of the baghouses. Depending upon the type of dust, particle size distribution, and grain loading, the baghouses were designed with an air-to-cloth ratio of 5.9-6.7 to 1 (ACFM to sq. ft. of cloth), using Dacron HCE filter bags. The baghouses are equipped with adjustable pulse durations and cycle times for compressed air discharge through rotary airlock valves. When in multiples, the baghouses are manifolded to a common self-cleaning inlet, allowing part of any baghouse system to be shut down for repairs without taking the entire baghouse out of service.

In the shale pyrolysis process, hot, sticky shale dust is generated at three points: the raw shale preheater, the ball circulation system, and the processed shale wetter. For these point sources, venturi wet scrubbers were evaluated due to their high particulate removal efficiency and the wet, sticky properties of the dust. Again, the information reported by Colony was used as the basis for the design and cost estimates. The high energy scrubbers used for the shale preheater require a larger pressure drop than conventional scrubbers.

Fugitive dust is generated from mining and blasting, raw and processed shale conveying, conveyor transfer points, baghouse dust discharge points to conveyor systems, truck loading and unloading, and disposal operations. These fugitive sources of particulates are controlled by water and foam spray suppression. This system is inexpensive and offers low water consumption and high removal efficiency.

In addition to the major particulate sources mentioned above, there are several minor point sources, such as the furnace and boiler stacks, for which no controls are applied.

Table 5.1-2 lists the design parameters for each of the baghouses and venturi wet scrubbers examined. The capital, operating, and annual costs for the particulate control equipment are presented in Table 5.1-3. Figures 5.1-2 and 5.1-3 present the cost curves for the baghouses and venturi wet scrubbers, respectively.

Total Particulate Emissions--

The controlled particulates from the point as well as fugitive sources are summarized in Table 5.1-4, along with the type of control technology examined for each source. The uncontrolled emissions are also included in the table to give total particulate emissions from the commercial operation. Estimates for these emissions were taken from Colony's PSD permit application (Colony Development Operation, 1977).

5.1.2 Sulfur Control

Processing of sulfur-containing fossil fuels will result in emissions of sulfur compounds, such as H_2S, COS, CS_2, RSH, etc., or their combustion product, SO_2. Federal and State standards limit sulfur emissions because of their potentially hazardous effects on human health and the environment.

Inventory of Control Technologies--

Two general categories of technologies are available for the control of sulfur emissions: (1) removal of sulfur compounds from flue gases after combustion (sulfur dioxide removal, or flue gas desulfurization) and (2) removal of sulfur compounds from gases prior to combustion (hydrogen sulfide removal). Several technologies in both categories offer recovery of sulfur in a useful form, while others chemically fix the sulfur compounds on a reagent which then requires disposal.

Sulfur dioxide control (flue gas desulfurization). Removal of sulfur compounds from flue gases--that is, flue gas desulfurization (FGD)--is based on the physical and chemical properties of SO_2 because fuel-based sulfur is usually converted to SO_2 upon combustion. Flue gas desulfurization can be divided into two categories:

- Wet scrubbing
- Dry scrubbing.

Wet scrubbing utilizes a solution or a slurry to absorb the SO_2. Dry scrubbing uses either a dry reagent bed or an atomized solution of an aqueous reagent at a high temperature to remove the SO_2. Both categories can be divided into regenerable and nonregenerable processes. The different types of SO_2 removal processes are shown in Figure 5.1-4, and Table 5.1-5 gives a brief description of each process.

Wet scrubbing--The regenerable wet scrubbing processes generally employ a clean alkaline solution to absorb SO_2 in a scrubber. The resulting spent solution is treated with an insoluble alkali makeup which precipitates the

TABLE 5.1-2. PARTICULATE CONTROL EQUIPMENT AND DESIGN PARAMETERS

Stream Number	Control Description	Control Location	Number of Units	Flow Rate Each (ACFM)	Dust Load (lb/hr)	Removal Efficiency (%)	Total Particulate Emissions (lb/hr)
2	Baghouse	Portal Transfer Point	1	5,100	166.7	99.7	0.5
3	Baghouse	Primary Crusher	1	62,100	2,400.0	99.7	7.2
4	Baghouse	Reclaim Tunnel	1	48,000	1,866.7	99.7	5.6
5	Baghouse	Transfer Tower Feed Bin	1	44,000	1,666.7	99.7	5.0
6	Baghouse	Fine Crusher	4	72,000	10,966.7	99.7	32.9
7	Baghouse	Fine Ore Storage	1	36,000	1,400.0	99.7	4.2
18	Venturi Wet Scrubber (high energy)	Raw Shale Preheat System	6	212,000	40,500.0	99.8	81.0
19	Venturi Wet Scrubber	Ball Circulation System	6	44,300	18,900.0	99.8	37.8
20	Venturi Wet Scrubber	Processed Shale Moisturizer	6	44,400	3,830.0	99.0	38.3
8, 139	Water and Foam Sprays	Conveyor Transfer Points, Open Stockpiles, etc.	--	--	--	50.0*	29.8*

* Estimated by SWEC using a removal efficiency of 50% for the material contacted. The efficiency in terms of the total airborne particulates would be considerably higher.

Source: Colony Development Operation, 1977, except as noted.

TABLE 5.1-3. COST OF PARTICULATE POLLUTION CONTROL

Stream Number	Control Description	Control Location	Number of Units	Flow Rate Each (ACFM)	Fixed Capital Cost ($000's)	Total Annual Operating Cost ($000's)	Total Annual Control Cost ($000's)*
2	Baghouse	Portal Transfer Point	1	5,100	44	4	12
3	Baghouse	Primary Crusher	1	62,100	450	42	127
4	Baghouse	Reclaim Tunnel	1	48,000	415	35	113
5	Baghouse	Transfer Tower Feed Bin	1	44,000	381	32	104
6	Baghouse	Fine Crusher	4	72,000	2,180	191	602
7	Baghouse	Fine Ore Storage	1	36,000	310	27	85
18	Venturi Wet Scrubber (high energy)	Raw Shale Preheat System	6	212,000	7,200	1,752	2,947
19	Venturi Wet Scrubber	Ball Circulation System	6	44,300	2,190	422	783
20	Venturi Wet Scrubber	Processed Shale Moisturizer	6	44,400	1,330	255	475
8, 139	Water and Foam Sprays	Conveyor Transfer Points, Open Stockpiles, etc.	--	--	500	824	932
TOTAL					15,000	3,584	6,180

* See Section 6 for details on computation of the total annual control cost.

Source: DRI estimates based on information provided by SWEC.

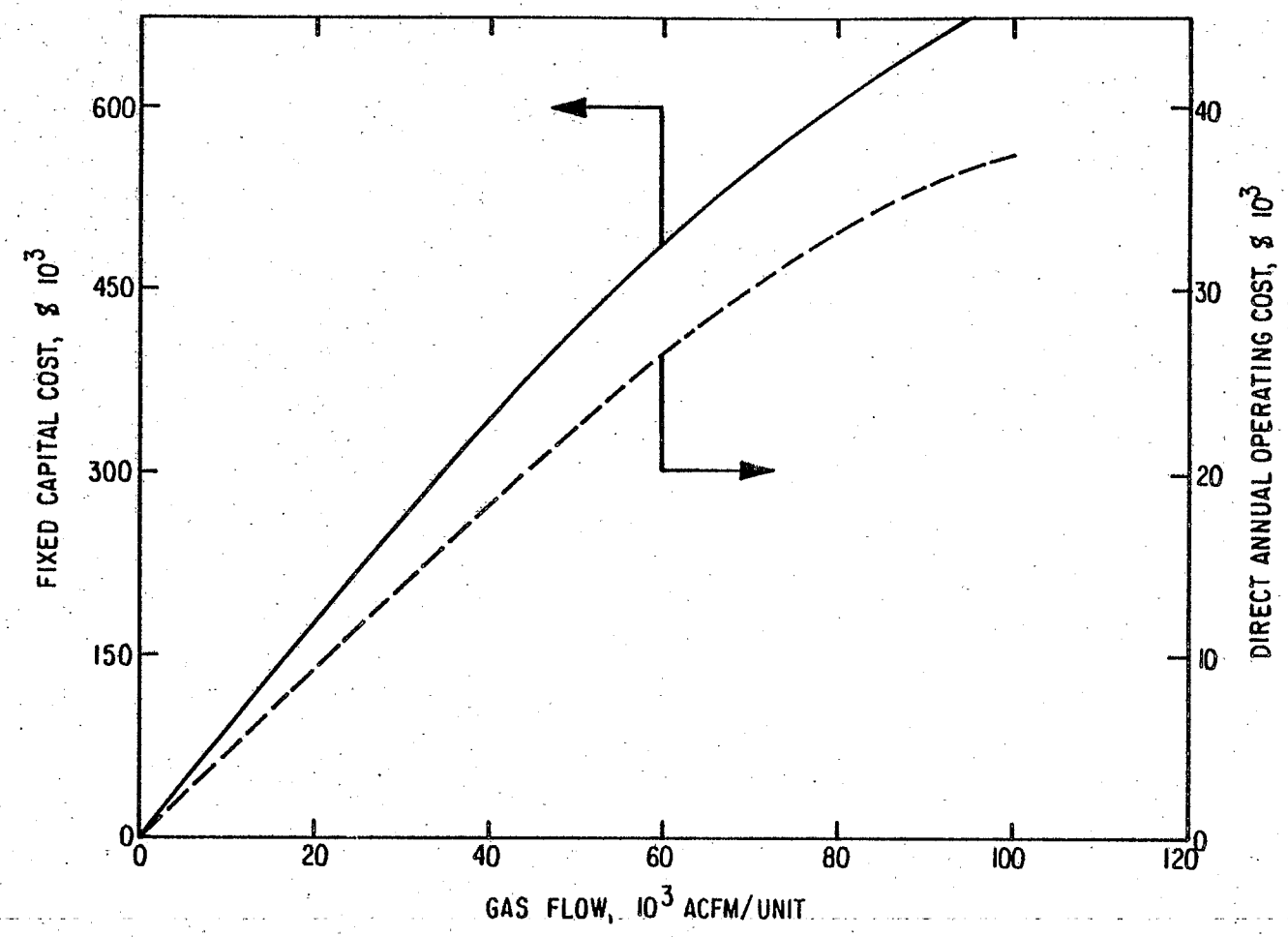

SOURCE: DRI based on information provided by SWEC

FIGURE 5.1-2 COST OF PARTICULATE CONTROL WITH BAGHOUSES

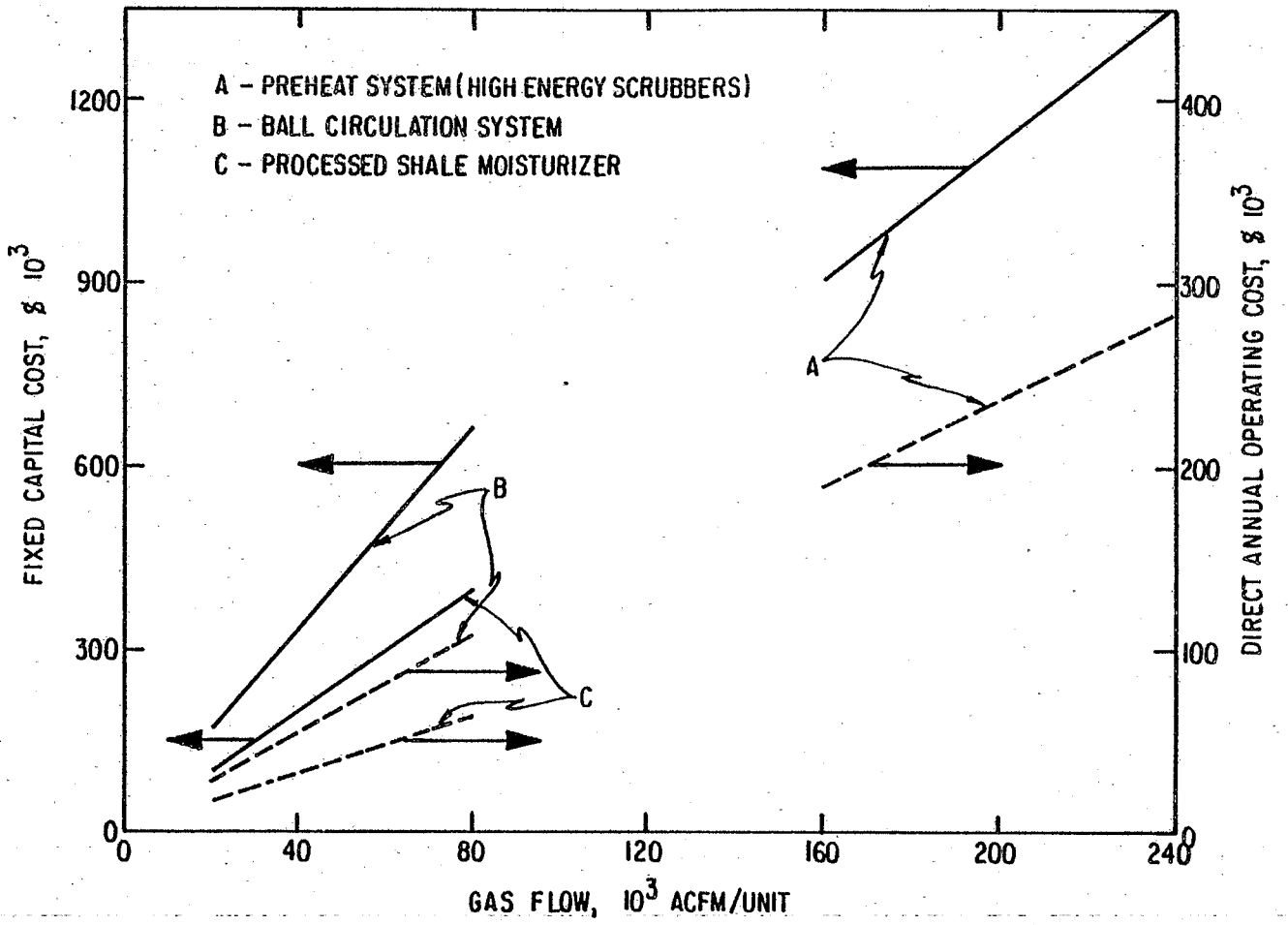

SOURCE: DRI based on information provided by SWEC

FIGURE 5.1-3 COST OF PARTICULATE CONTROL WITH VENTURI WET SCRUBBERS

TABLE 5.1-4. TOTAL PARTICULATE EMISSIONS FROM THE PLANT

Stream Number	Emission Source	Control Description	Particulate Emissions (lb/hr)
2	Portal Transfer Point	Baghouse	0.5
3	Primary Crusher	Baghouse	7.2
4	Reclaim Tunnel	Baghouse	5.6
5	Transfer Tower Feed Bin	Baghouse	5.0
6	Fine Crusher	Baghouse	32.9
7	Fine Ore Storage	Baghouse	4.2
10	Mine Vent	--	25.0
18	Raw Shale Preheat System	Venturi Wet Scrubber (high energy)	81.0
19	Ball Circulation System	Venturi Wet Scrubber	37.8
20	Processed Shale Moisturizer	Venturi Wet Scrubber	38.3
91	Hydrogen Furnace	--	11.4
104	Coker Feed Heater	--	1.1
118	Gas Oil Heater	--	0.4
119	Gas Oil Reboiler	--	1.6
125	Naphtha Heater	--	0.2
138	Diesel Equipment	Catalytic Converters	19.0*
179	Utility Boiler	--	2.9
8, 139	Conveyor Transfer Points, Open Stockpiles, etc.	Water and Foam Sprays	29.8*
TOTAL			303.8

Source: Colony Development Operation, 1977, except those quantities noted with an asterisk (*) were estimated by SWEC.

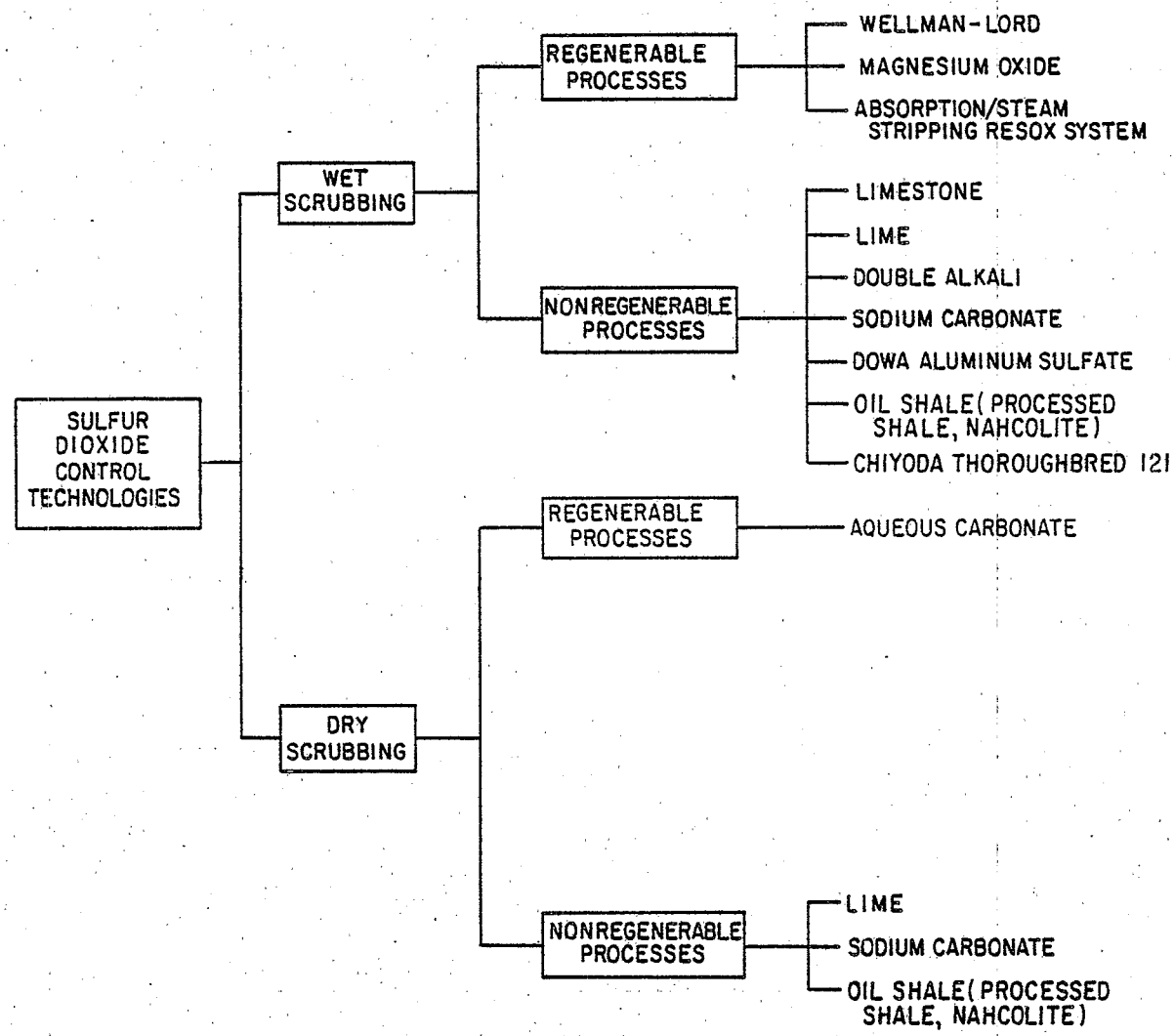

SOURCE: SWEC

FIGURE 5.1-4 SULFUR DIOXIDE CONTROL TECHNOLOGIES

TABLE 5.1-5. KEY FEATURES OF SULFUR DIOXIDE CONTROL TECHNOLOGIES

Control Technology	Operating Principle	Performance*	Development Status	Advantages	Disadvantages
REGENERABLE WET SCRUBBING PROCESSES					
Wellman-Lord[a]	Absorbs SO_2 with a sodium sulfite/bisulfite solution. A bleed stream of the rich solution is sent to evaporators where SO_2 and water are driven off and the reagent is regenerated.	Reduces the outlet flue gas SO_2 concentration to 50 ppmv.	About 30 commercial units are in operation in the U.S. and Japan.	Produces a concentrated SO_2 stream which can be used to make salable sulfur or sulfuric acid.	Requires fuel for the solution evaporators.
Magnesium Oxide[a]	Absorbs SO_2 with a magnesium oxide slurry. A bleed stream of the spent slurry is dried and calcined to regenerate the magnesium oxide and produce a dilute SO_2 stream (10% SO_2).	Reduces the outlet flue gas SO_2 concentration to 50 ppmv.	Three demonstration plants have been tested in Japan (each about 100 MW size). Two commercial units are under construction in the U.S.	Produces an SO_2 stream suitable for manufacture of sulfuric acid.	Requires fuel for the $MgSO_3/MgSO_4$ dryer and calciner.
Absorption/ Steam Stripping Resox System[a]	An aqueous solution of a suitable reagent (e.g., sodium carbonate, citric acid) absorbs the SO_2, and the solution is regenerated by indirect steam heating to evolve a concentrated SO_2 stream. The SO_2 is then reacted with crushed coal in the Resox system to produce elemental sulfur.	Reduces the outlet flue gas SO_2 concentration to 50 ppmv.	The systems have been tested in separate demonstration plants. A demonstration plant for the combined system has been proposed.	Uses a simple absorption/ steam stripping system and produces salable elemental sulfur.	Has not been demonstrated as a combined system.
NONREGENERABLE WET SCRUBBING PROCESSES					
Limestone[a]	Absorbs SO_2 with a limestone slurry. A bleed stream of the slurry is partially dewatered and disposed of in a landfill.	Reduces the outlet flue gas SO_2 concentration to 50 ppmv.	Many commercial units in operation worldwide.	Low capital and operating cost. Simple and proven process with conventional process equipment.	Has a low operability factor due to scaling, erosion and corrosion. Sulfur is nonrecoverable.
Lime[a]	Absorbs SO_2 with a lime slurry. A bleed stream of the slurry is partially dewatered and disposed of in a landfill.	Reduces the outlet flue gas SO_2 concentration to 50 ppmv.	Many commercial units in operation worldwide.	Very similar to the limestone process and can potentially give a greater SO_2 removal efficiency than limestone.	Lime costs are rising rapidly because of higher energy costs. Sulfur is nonrecoverable.

(Continued)

TABLE 5.1-5 (cont.)

Control Technology	Operating Principle	Performance*	Development Status	Advantages	Disadvantages
Double Alkali[a]	Uses two alkaline solutions, sodium hydroxide and sodium sulfite, to convert SO_2 to sodium bisulfite. The spent solution is regenerated by lime addition. The precipitated solids are partially dewatered and disposed of in a landfill.	Reduces the outlet flue gas SO_2 concentration to ≤50 ppmv.	Nine commercial units in operation and three under construction in the U.S.	Low in capital and operating cost like the limestone system, but the use of a clear scrubbing solution reduces scaling, erosion, and corrosion in the scrubbing loop.	Requires soda ash (Na_2CO_3) makeup in addition to lime for precipitation. Soda ash is an expensive raw material. The sludge contains soluble and leachable sodium salts. Sulfur is nonrecoverable.
Sodium Carbonate[a]	Absorbs SO_2 with a sodium carbonate solution. A bleed stream of the spent solution is partially dewatered and disposed of in a landfill.	Reduces the outlet flue gas SO_2 concentration to 50 ppmv.	Four commercial units in operation worldwide.	Low capital cost. A very simple and reliable process.	Soda ash is an expensive raw material. Produces a sludge which is very difficult to dewater and dispose of. Sulfur is nonrecoverable.
Dowa Aluminum Sulfate[b]	Absorbs SO_2 with an acidic clear solution of basic aluminum sulfate. The spent solution is oxidized to aluminum sulfate. Limestone is added to the solution to regenerate basic aluminum sulfate and produce gypsum which is partially dewatered and disposed of in a landfill.	Reduces the outlet flue gas SO_2 concentration to 50 ppmv.	Not used commercially in the U.S.	Uses the same basic process design as the double alkali process and, therefore, has the same advantages. The process uses a clear scrubbing solution which reduces scaling, erosion, and corrosion in the scrubbing loop.	Requires dewatering and landfill disposal.
Oil Shale[b] (Processed Shale, Nahcolite)	Absorbs SO_2 with a shale slurry. A bleed stream of the slurry is partially dewatered and disposed of in a landfill.	Reduces the outlet flue gas SO_2 concentration to ~50 ppmv.	The process is only conceptual at this time and has not been tested on a pilot scale.	Low capital and operating cost. Also, an abundant supply of processed shale is available at the plant site. Nahcolite is plentiful in the Piceance Basin.	Has not yet been tested, even on a pilot plant scale. Sulfur is nonrecoverable.

(Continued)

TABLE 5.1-5 (cont.)

Control Technology	Operating Principle	Performance*	Development Status	Advantages	Disadvantages
Chiyoda Thorough-bred 121 (CT-121)[c]	The flue gas is first quenched to its saturation temperature and then sparged into a limestone slurry, generating a jet bubbling froth layer. The SO_2 in the flue gas is absorbed by the limestone slurry in the jet bubbling layer. The calcium sulfite formed by this reaction is oxidized to calcium sulfate (gypsum) by the introduction of air into the jet bubbling layer. A bleed stream of the waste slurry can be dewatered and landfilled as a recoverable resource or given away to local cement, fertilizer or wallboard industries.	Reduces the outlet flue gas SO_2 concentration to 50 ppmv.	The process has been tested on a demonstration size scale.	Absorbs SO_2 and oxidizes calcium sulfite to gypsum in one reactor vessel.	Has only been tested on a demonstration size scale. Sulfur is nonrecoverable.
REGENERABLE DRY SCRUBBING PROCESS					
Aqueous Carbonate[a]	Flue gas is contacted with an atomized solution of aqueous sodium carbonate in a spray dryer scrubber. The sodium carbonate absorbs the SO_2, is dried, and then collected in a baghouse or electrostatic precipitator (ESP). The dried product is sent to the reducer vessel where it is reacted with coal in a molten sodium carbonate and sodium sulfide solution to form sodium sulfide. The sodium sulfide is then reacted in another vessel with CO_2 in the off-gas from the reducer vessel to regenerate sodium carbonate and evolve hydrogen sulfide gas. The hydrogen sulfide gas is sent to a Claus unit to produce elemental sulfur.	Reduces the outlet flue gas SO_2 concentration to 75-100 ppmv.	The process steps have been tested individually on a pilot scale. An integrated demonstration size (100 MW) unit is currently under construction in the U.S.	Produces salable elemental sulfur using coal as a fuel instead of higher priced and less available oil and natural gas.	The hot molten carbonate solution used in the regeneration section of the process is very corrosive and will require very expensive, special construction materials.

(Continued)

TABLE 5.1-5 (cont.)

Control Technology	Operating Principle	Performance*	Development Status	Advantages	Disadvantages
NONREGENERABLE DRY SCRUBBING PROCESSES					
Lime[a]	Flue gas is contacted with an atomized lime slurry in a spray dryer scrubber. The lime absorbs the SO_2, is dried, and then collected in a baghouse or electrostatic precipitator (ESP).	Reduces the outlet flue gas SO_2 concentration to 100-150 ppmv.	Two commercial units are in operation in the U.S. Three additional units are currently under construction.	Since the flue gas is not saturated, slightly less makeup water is needed and less stack gas reheat is needed.	This system is usually only economically feasible where low sulfur fuel is burned because of the low reagent utilization rate. Very high removal efficiencies are also not usually possible because of the low reagent utilization rate. Sulfur is nonrecoverable.
Sodium Carbonate[a]	Flue gas is contacted with an atomized solution of aqueous sodium carbonate in a spray dryer scrubber. The sodium carbonate absorbs the SO_2, is dried, and then collected in a baghouse or electrostatic precipitator (ESP).	Reduces the outlet flue gas SO_2 concentration to 75-100 ppmv.	The process has been tested on a demonstration size scale.	Same as for the lime dry scrubbing process.	Same as for the lime dry scrubbing process. Also, soda ash is an expensive raw material. Sulfur is nonrecoverable.
Oil Shale[b] (Processed Shale, Nahcolite)	Flue gas is contacted with an atomized absorbent slurry in a spray dryer scrubber. The alkaline minerals in the shale (primarily calcium and sodium carbonates) absorb the SO_2, are dried, and then collected in a baghouse or electrostatic precipitator (ESP).	Reduces the outlet flue gas SO_2 concentration to ~100-150 ppmv.	The process is only conceptual at this time and has not been tested on a pilot plant scale; however, the Lurgi oil shale retorting process lift pipe and flue gas treating equipment and the TOSCO II preheat unit closely resemble this system.	Same as for the lime dry scrubbing process. Also, an abundant supply of processed shale is available at the plant site. Nahcolite is plentiful in the Piceance Basin.	Same as for the lime dry scrubbing process. Sulfur is nonrecoverable.

* Performance somewhat depends on inlet SO_2 concentrations, fuel quantities and reagent utilization.

Sources: SWEC based on information from:

[a] Kohl and Riesenfeld, 1979.

[b] Stone and Webster Engineering Corp., January 30, 1979.

[c] Electric Power Research Institute, April 1980.

absorbed SO_2. The insoluble alkali sulfite and sulfate crystals are then separated from the regenerated solution in a clarifier and possibly a second dewatering step such as a centrifuge. The spent alkali sludge is treated by calcining, evaporation, stripping, etc., which drive off the SO_2. The SO_2 can then be converted to a useful form of sulfur such as sulfuric acid or elemental sulfur.

In the nonregenerable processes, this spent alkali sludge is sent to a disposal area for land filling.

Dry scrubbing--The dry scrubbing processes use a concentrated slurry of alkaline crystals which are atomized and injected into the flue gas stream as it passes through a spray dryer. The scrubbing slurry absorbs the SO_2 and is dried by the hot flue gases. The dried spent alkali is then removed from the flue gas by an electrostatic precipitator or a baghouse.

In the regenerable processes, the spent alkali is reduced to a sulfide and then reacted with CO_2 to regenerate the alkali and evolve H_2S gas. The regenerated alkali is recycled, while the H_2S gas may be converted to elemental sulfur in a sulfur recovery unit.

In the nonregenerable processes, the spent material is sent to a disposal area for landfilling. The spent material also may be recycled to increase alkali utilization.

Hydrogen sulfide control. H_2S removal can be divided into two categories:

- Direct conversion
- Indirect conversion.

Direct conversion actually oxidizes H_2S to elemental S. Indirect conversion involves removing acid gases (H_2S and CO_2) from the gas stream and requires downstream direct conversion or further processing to treat the sulfur compounds. Figure 5.1-5 lists the H_2S removal systems available, and Table 5.1-6 presents a brief description of the process technologies.

Direct conversion--As shown in Table 5.1-6, several direct conversion technologies are currently available, including Claus, IFP, Stretford, Beavon, Giammarco-Vetrocoke, Takahax, Ferrox and Haines. The conversion of H_2S to elemental sulfur takes place in the liquid-phase in all the processes, except the Claus and Haines which are dry gas-phase removal processes.

Liquid-phase direct conversion processes are ideal for treatment of gases containing low concentrations of H_2S. In these processes, the acid gas components are absorbed by alkali solutions and then oxidized with dissolved oxygen to elemental sulfur. High circulation rates of the alkali solution are required for high performance and to reduce thiosulfate precipitate formation. High selectivity for H_2S removal can also be achieved by taking advantage of the higher H_2S versus CO_2 absorption rates.

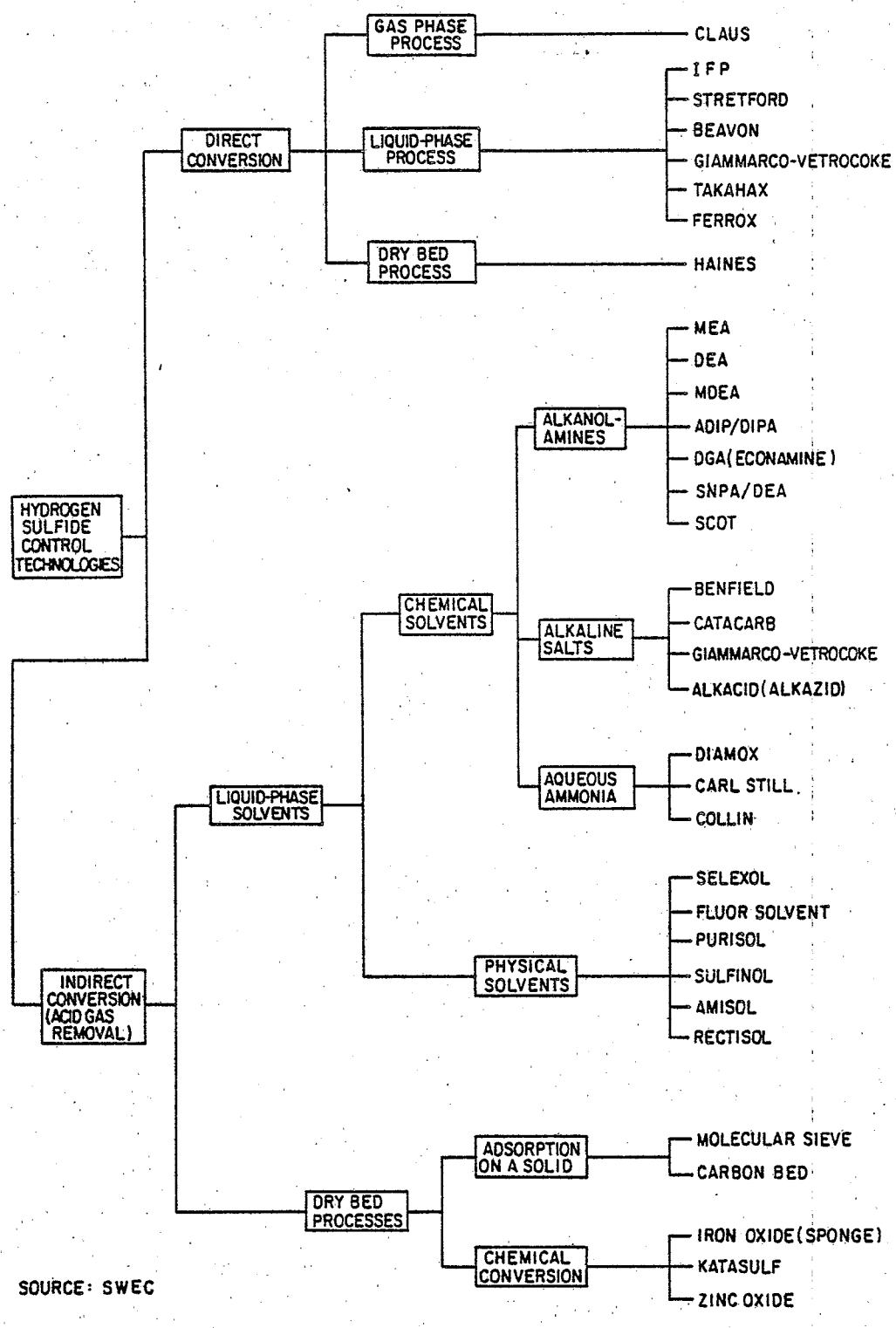

SOURCE: SWEC

FIGURE 5.1-5 HYDROGEN SULFIDE CONTROL TECHNOLOGIES

TABLE 5.1-6. KEY FEATURES OF HYDROGEN SULFIDE CONTROL TECHNOLOGIES

Control Technology	Operating Principle	Performance	Development Status	Advantages	Disadvantages
DIRECT CONVERSION					
Claus[a,b]	Partial oxidation of H_2S to SO_2 and subsequent reaction $2H_2S + SO_2 \rightarrow S + 2H_2O$ in gas-phase.	95% removal of H_2S.	Continuously improved designs available.	Provides extremely good quality elemental sulfur. Partially removes COS.	Side reactions with CO_2 and light hydrocarbons result in stable sulfur compounds emitted from the process. Tail gas may need to be treated.
IFP[b]	Absorption of H_2S and SO_2 (Claus tail gas) in polyalkene glycol, followed by conversion to elemental sulfur using a catalyst (liquid phase Claus reaction).	Reduces sulfur species to <1,500 ppmv.	Available for desulfurization of Claus tail gas.	Presence of high concentration of CO_2 has no adverse effect.	Low removal efficiency.
Stretford[a,b]	H_2S absorption and liquid-phase oxidation $H_2S + \frac{1}{2}O_2 \rightarrow S + H_2O$ in an alkaline solution of a vanadium salt.	Reduces the outlet H_2S concentration to 30 ppmv.	Process commercially available.	Process suitable for desulfurization of a variety of gas streams.	CO_2 absorbed in the process causes significant increases in absorber height requirements. HCN in feed produces a nonregenerable compound with high pollution potential.
Beavon[a,b]	Catalytic hydrogenation and hydrolysis of all sulfur compounds to H_2S, followed by recovery of elemental sulfur using the Stretford process (see above).	Reduces the outlet H_2S concentration to <50 ppmv.	Process commercially available.	Removes all sulfur compounds.	Same as the Stretford process (see above).
Giammarco-Vetrocoke[b]	H_2S absorption and liquid-phase oxidation $H_2S + \frac{1}{2}O_2 \rightarrow S + H_2O$ in a solution of arsenic salt.	99.99% removal of H_2S.	Available for desulfurization of coke-oven and synthesis gases and natural gas.	Capable of producing purified gas containing less than 1 ppmv H_2S even at temperatures up to 300°F.	Hazardous nature of arsenic solution.
Takahax[b]	H_2S absorption and liquid-phase oxidation $H_2S + \frac{1}{2}O_2 \rightarrow S + H_2O$ in an alkaline solution of naphthoquinone compounds.	99.99% removal of H_2S.	More than 100 units operating in Japan.	Capable of producing treated gas containing no detectable H_2S even at high inlet concentrations.	Sulfur precipitation is of very fine grain and amenable to removal via flotation techniques.

(Continued)

TABLE 5.1-6 (cont.)

Control Technology	Operating Principle	Performance	Development Status	Advantages	Disadvantages
Ferrox[b]	H_2S absorption and liquid-phase oxidation $H_2S + \frac{1}{2}O_2 \rightarrow S + H_2O$ in a solution of Na_2CO_3 and $Fe(OH)_3$.	85-99% removal of H_2S.	Few ferrox plants are still in operation.	Marked improvement over dry-box purification due to reduced installation and labor costs.	Sulfur from the ferrox process is not suitable for most uses and chemical replacement costs are high.
Haines[b]	Molecular sieves remove H_2S and water. H_2S is stripped from the bed and reacted with SO_2 to form elemental sulfur.	Reduces the outlet H_2S concentration to <5 ppmv.	Pilot plants in operation in Canada.	Selective adsorption of H_2S in the presence of CO_2. Also, removes mercaptans.	Zeolite adsorption beds may become fouled, impairing regeneration.
INDIRECT CONVERSION					
MEA[b]	H_2S and CO_2 absorbed by a regenerable reaction with Monoethanolamine at ambient temperatures.	Reduces the outlet H_2S concentration to 30 ppmv.	Used almost exclusively for years to remove H_2S and CO_2 from natural and certain synthesis gases.	Simultaneous removal of H_2S and CO_2. Applicable to low concentrations of H_2S and CO_2.	Nonselective for H_2S (e.g., CO_2 also absorbed). Reacts irreversibly with COS and CS_2.
DEA[b]	H_2S and CO_2 absorbed by a regenerable reaction with Diethanolamine at ambient temperature.	99% removal of H_2S.	Preferred choice for treatment of high-pressure natural gas with high concentrations of COS and CS_2.	Predominantly used in refining or manufacturing. Does not absorb COS and CS_2.	Nonselective for H_2S. Reclaiming requires vacuum distillation.
MDEA[a,b]	Selective absorption of H_2S by a regenerable reaction with Methyldiethanolamine.	99% removal of H_2S, 30-65% removal of CO_2.	Commercial plant under construction.	Higher selectivity to H_2S than primary or secondary amines.	Reactions between MDEA and HCN are irreversible.
ADIP/DIPA[a,b]	Selective absorption of H_2S by a regenerable reaction with Diisopropanolamine.	Reduces the outlet H_2S concentration to <100 ppmv.	More than 100 plants constructed world-wide.	Selective for H_2S removal. Substantial amounts of COS removed without detrimental effects. Low regeneration steam requirements.	Can require long residence times for sufficient removal.
DGA[b] (Econamine)	Absorption of H_2S by a regenerable reaction with Diglycolamine.	99% removal of H_2S.	Sour gas processing in operation.	DGA similar to DEA with lower vapor pressure. Lower circulation rates and steam consumption than DEA.	DGA costs are high. High corrosivity. Losses due to reaction with CO_2, COS and CS_2 are high. Reclaiming requires vacuum distillation.

(Continued)

TABLE 5.1-6 (cont.)

Control Technology	Operating Principle	Performance	Development Status	Advantages	Disadvantages
SNPA/DEA[b]	Process utilizes experience gained by SNPA in using DEA.	99% removal of H_2S.	Widely accepted choice for the treatment of high-pressure natural gases with high concentrations of acidic components.	COS and CS_2 are not harmful to the solution. Decomposition products removed by filtering through activated carbon.	High pressure process. Vacuum distillation probable.
SCOT[a,b]	Process uses DIPA to absorb H_2S from the Claus tail gas. Non-H_2S sulfur compounds are converted to H_2S before absorption in DIPA. Regenerated H_2S is oxidized to SO_2 before venting.	Reduces the outlet SO_2 concentration to 300 ppmv.	Several commercial units in operation since 1972.	Removes all sulfur compounds. Specifically suited for the Claus tail gas cleanup.	DIPA removes ~30% CO_2 which is recycled to the Claus process, diluting the feed.
Benfield[a,b] (Hot Potassium Carbonate)	Process uses hot (190°F) potassium carbonate to absorb CO_2 and H_2S. Regenerated by pressure reduction.	90-98% removal of H_2S, 10-40% removal of CO_2.	Process utilized worldwide, with further developments in recent years.	High temperature permits use of highly concentrated solution. Process is very simple. COS, CS_2 and RSH easily removed.	High pressure process.
Catacarb[b]	Similar to Benfield with the use of a proprietary catalytic additive to the hot $KHCO_3$.	Reduces the outlet H_2S concentration to <5 ppmv.	Plants in operation worldwide.	Higher gas purity and lower steam consumption than Benfield. Lower capital cost.	High pressure process.
Giammarco-Vetrocoke	SEE DIRECT CONVERSION PROCESSES				
Alkacid[a,b] (Alkazid)	Process uses various proprietary absorption solutions of alkaline salts and organic acid.	Reduces the outlet H_2S concentration to <5 ppmv.	Although operated abroad since the 1930's, no known commercial installations exist in the U.S.	Solutions are relatively noncorrosive. Solution tailored to requirements for H_2S selectivity and to minimize effect of contaminants.	May require special alloys to handle hot solutions. High CO_2 concentrations result in lower H_2S removal efficiency.
DIAMOX[b]	Selective H_2S removal process using absorption characteristics of ammonia with total (0.7 wt% NH_3) liquid recycle.	Reduces the outlet H_2S concentration to 100 ppmv.	Recently developed and commercialized in Japan.	Acid gas produced is suitable Claus feed or sulfuric acid plant feed. Low pressure process.	Purge stream of ammonia liquor is produced.
Carl Still[a,b]	Selective H_2S removal process using ammonia for absorption (2.0 wt% NH_3) with total liquid recycle.	Reduces the outlet H_2S concentration to ~560 ppmv.	Commercial process now in operation in the U.S.	Low pressure process. Good Claus plant feed.	H_2S selectivity less than DIAMOX. Concentrated NH_3 solutions are highly corrosive. Organic sulfides are not removed.

(Continued)

TABLE 5.1-6 (cont.)

Control Technology	Operating Principle	Performance	Development Status	Advantages	Disadvantages
Collin[b]	Selective H_2S removal process using NH_3 for absorption with total liquid recycle in a six-stage spray tower.	Reduces the outlet H_2S concentration to ~2,000 ppmv.	Commercial process now in use in Europe.	Low pressure process. Good Claus plant feed.	Does not remove organic sulfur compounds.
Selexol[a,b]	Uses an anhydrous organic solvent dimethylether of polyethylene glycol which physically dissolves acid gases and is stripped by reducing pressure without adding heat.	Reduces the outlet H_2S concentration to <1 ppmv.	Few plants in operation for natural gas treatment and for synthesis and coal-derived gas purification.	Nontoxic solvent. Partially removes COS and organic sulfur compounds.	Requires high partial pressure of acid gas.
Fluor Solvent[b]	Uses an anhydrous organic solvent proprylene carbonate which physically dissolves acid gases.	Reduces the outlet H_2S concentration to <5 ppmv.	Plants in operation for CO_2 gases and combination CO_2 and H_2S gases.	Low operation costs.	Solvent intended primarily for removal of CO_2.
Purisol[a,b]	Uses an anhydrous organic solvent N-methyl-2-pyrolidine which physically dissolves acid gases.	Reduces the outlet H_2S concentration to <4 ppmv and CO_2 concentration to 2-3 vol. %.	Four commercial installations in operation as of 1979.	High H_2S selectivity. Partially removes COS and organic sulfur compounds.	Operating temperatures must be near ambient and a certain minimum acid gas partial pressure is required.
Sulfinol[a,b]	Uses a mixture of chemical (DIPA) and physical solvent (sulfolane) and water.	Reduces the outlet H_2S concentration to <1 ppmv and CO_2 to <50 ppmv.	Wide application in the treatment of natural, refinery and synthesis gases.	Removes COS and RSH. Capacity of the sulfinol high at high partial pressure of H_2S.	Optimum operation requires high pressure. Solution absorbs heavy HC's, requiring flash tank separation.
Amisol[b]	Uses a mixture of a chemical (MEA/DEA) and a physical solvent (methanol).	Reduces the outlet H_2S concentration to <0.1 ppmv and CO_2 to <5 ppmv.	Only semi-commercial plants in operation.	Capable of removing all sulfur compounds.	Nonselective for H_2S.
Rectisol[a,b]	Uses physical absorption in methanol at low temperature.	Reduces the outlet H_2S concentration to <0.1 ppmv.	Thirty-six plants are in operation worldwide. Twelve units are under construction.	Heat input low because temperature is maintained by flashing. Removes all undesirable components (COS, CS_2, RSH, HCN) in a single step.	Complex operation. High solvent losses. Best suited for higher pressures. Low temperature process.
Molecular Sieve[a,b]	Use of molecular sieves to adsorb sulfur compounds.	Reduces the outlet H_2S concentration to <4 ppmv.	Not widely used for removing H_2S from gas streams.	Extended useful life (3-5 years) of adsorbent possible with properly designed molecular sieve. Removes mercaptans.	Preferably used on high pressure streams. Regeneration gas disposal.

(Continued)

TABLE 5.1-6 (cont.)

Control Technology	Operating Principle	Performance	Development Status	Advantages	Disadvantages
Carbon Bed[a,b]	Activated carbon catalytically oxidizes H_2S to elemental sulfur at ambient temperatures. Sulfur removed by solvent washing.	Reduces the outlet H_2S concentration to 0.2 ppmv.	Sixty commercial plants in operation in the U.S.	Very pure sulfur is obtained. Complete H_2S removal.	Carbon deactivated rapidly. Purification required to remove tar and ammonia. Complicated sulfur extraction procedures. 1,500 ppmv/ H_2S limit in feed.
Iron Oxide[a,b] (Iron Sponge)	H_2S removed completely by reaction with ferric oxide $2Fe_2O_3 + 6H_2S \rightarrow 2Fe_2S_3 + 6H_2O$. Exposure to air oxidizes Fe_2S_3 to Fe_2O_3 and sulfur.	Reduces the outlet H_2S concentration to 0.3 ppmv.	Very old process, still used on a large scale for the treatment of coal gases.	Low pressure drop process. Complete removal of H_2S.	Suitable for low volume/ low pressure gases. Fouled Fe_2O_3 disposal is required. Tar and HCN contaminated Fe_2O_3.
Katasulf[b]	Air and preheated gas with H_2S catalyzed to form SO_2 which is absorbed in an aqueous ammonium sulfite-bisulfite solution.	Reduces the outlet H_2S concentration to <4 ppmv.	Large commercial units in operation worldwide.	Produces a salable ammonium sulfate.	Carbon-steel corrosion problems exist with some forms of the process.
Zinc Oxide[a]	The gas is passed through a bed of zinc oxide, resulting in the reaction $ZnO + H_2S \rightarrow ZnS + H_2O$.	Reduces the outlet H_2S concentration to 0.2-0.5 ppmv.	One hundred commercial plants in operation worldwide.	Virtually complete removal of H_2S.	ZnO is not regenerable and is expensive.

Sources: SWEC based on information from:

[a] Dravo Corp., February 1976.

[b] Kohl and Riesenfeld, 1979.

The gas-phase direct conversion (Claus and Haines processes) consists of thermal oxidation of one-third of the H_2S to SO_2, followed by a series of catalytic reactors that react SO_2 with the remaining H_2S to form elemental sulfur. The heat for combustion in the furnace is obtained from the oxidation of H_2S; thus, the H_2S concentration must be high enough to sustain spontaneous combustion. Therefore, the gas-phase conversion requires an acid gas stream with a higher H_2S concentration than the liquid-phase conversion.

Indirect conversion--There are essentially five classes of commercially available, indirect H_2S removal technologies that are used in conjunction with direct conversion technologies; these are, removal of H_2S by:

I. Alkanolamine

II. Alkaline salts

III. Aqueous ammonia

IV. Physical solvents

V. Dry bed processes.

The alkanolamine processes (I) remove acidic impurities, i.e., H_2S, CO_2, COS, and CS_2, from gases by an acid-base chemical reaction with the amine. The process involves an absorption-regeneration cycle of a circulating amine. Commonly used amines are monoethanolamine (MEA), methyldiethanolamine (MDEA), diethanolamine (DEA), diisopropanolamine (DIPA) and diglycolamine (DGA). Major equipment systems used in the amine process are a gas-amine contactor (absorber) for absorption of the acid gases and a regenerator (stripper) for releasing the acid gas from solution. A downstream sulfur recovery facility is required to oxidize, or recover, the H_2S.

Alkaline salt processes (II) use an aqueous solution of a buffered potassium salt. The weak alkaline solution absorbs the acid gas components of the feed gas. The process operates at medium to high pressures because the absorption capability is influenced by the acid gas (H_2S and CO_2) partial pressures. The alkaline solution is regenerated by reducing the rich solution pressure to near ambient pressure, followed by steam stripping and sulfur recovery.

The ammonia process (III) uses the same mechanism for H_2S removal as the alkaline salt process (II) except the ammonia is used as the absorption agent. Regeneration and additional sulfur recovery are necessary.

Physical solvents (IV) have low heats of solution and can absorb acid gases in proportion to their partial pressures. These processes require high acid gas partial pressures which are achieved at low gas pressures and high acid gas concentrations, or at high gas pressures and low acid gas concentrations. Physical solvent processes are most economical when the feed gas is at high pressure and bulk removal of the acid components is desired. A high degree of selectivity of H_2S absorption is possible, but additional equipment is required, increasing costs. A downstream sulfur facility is also necessary to recover the H_2S.

Dry bed processes (V) generally employ two techniques to remove H_2S from a gas stream: (1) adsorption onto a dry bed, such as a molecular sieve or activated carbon, followed by desorption of the H_2S from the bed using a hot gas stream; and (2) reacting the H_2S with a dry bed material such as iron oxide to form a solid sulfide compound, which is then oxidized by air to regenerate the dry bed and to form elemental sulfur.

Sulfur Control Technologies Analyzed--

The prime sources of SO_2 emissions from the TOSCO II plant are the fuels consumed in various unit processes and auxiliary facilities. All of the gaseous fuels except the C_3 fraction (Colony had planned to market this liquefied petroleum gas, or LPG) are used in the plant. In addition, a portion of the crude gas oil product (before upgrading) is combusted in the ball heater, thermal oxidizer and steam superheater.

According to Colony's PSD permit application (Colony Development Operation, 1977), the TOSCO II preheat system is capable of removing 95% of the SO_2 from the ball heater and thermal oxidizer flue gases. Furthermore, the amount of SO_2 in the steam superheater flue gas is fairly small. If these conditions exist in a commercial operation, then there would appear to be little need for removing the fuel-based sulfur from the gas oil in order to reduce the SO_2 emissions. From the processing viewpoint, however, the sulfur is removed from the net oil products by hydrotreating, but this is not considered a pollution control measure for costing purposes in this document.

The sulfurous gaseous streams from the retort, foul water stripper, ammonia recovery unit, hydrotreaters, and delayed coker are treated for sulfur removal. The most significant compound of sulfur in these streams is H_2S (although COS, CS_2, and mercaptans also have been reported); therefore, the technologies examined are based on removing and recovering the H_2S. Since the H_2S is recoverable as salable elemental sulfur (as proposed by Colony), flue gas desulfurization technologies were not analyzed in detail.

Two separate H_2S removal and recovery processes, based on the information provided by Colony (Colony Development Operation, 1974 and 1977), have been examined in this manual. These systems are:

- DEA/Claus/Wellman-Lord
- Stretford.

Both of these systems have been used in oil shale related industries at a scale necessary for the TOSCO II plant. The individual technologies in these systems have been proven to be technologically and economically feasible, and substantial cost and design criteria are available in the open literature and from the technology vendors.

The amine process (alkanolamine process I) proposed by Colony to desulfurize the retort gas is the DEA (diethanolamine) process. It removes approximately 99% of the CO_2 and all but 135 ppmv of the H_2S from the retort gas (Colony Development Operation, 1977). The acidic gases in the retort gas

are absorbed in the DEA solution, and the rich amine stream is regenerated in a steam stripper column and returned to the absorption column. The stripped acid gases (primarily H_2S and CO_2) are treated in a Claus unit for sulfur recovery. This high removal of CO_2 is not required for LPG and fuel gas production and it increases operating costs because of the large quantities of steam needed in the stripping (regenerating) section of the process. An alternate amine system using MDEA (methyldiethanolamine) is highly selective for H_2S removal. This selectivity allows a reduction in steam requirements of approximately 20% as compared to DEA and, consequently, reduces operating costs.

The stripped acid gas stream leaving the amine unit is approximately 14% H_2S by weight. This stream and overhead gases from the ammonia recovery unit and foul water stripper are treated in the Claus process.

In the Claus process, the acid gas is blown into a sulfur burner where it is mixed with sufficient air to oxidize one-third of the H_2S to SO_2. Portions of the other organic sulfur compounds are also converted to SO_2 during combustion. The SO_2 and remaining H_2S enter a reaction furnace and then pass through a three-stage catalytic reactor where they react at 95% efficiency to form elemental sulfur. A higher conversion efficiency is attainable with additional catalytic stages. The unreacted SO_2 and H_2S are sent to a Wellman-Lord tail gas unit.

In the Wellman-Lord unit, the non-SO_2 sulfur compounds in the Claus tail gas are converted to SO_2 by incineration. A majority of the SO_2 is then absorbed in Na_2SO_3 solution, while the remainder is vented to the atmosphere. The SO_2-rich solution is regenerated by steam stripping and the desorbed SO_2 is recycled back to the Claus unit for further recovery. An SO_2 absorption efficiency of 92% is assumed for the process, but higher efficiencies may be obtained by increasing the contact time between the reactants. Both the 95% efficiency for the Claus process and 92% efficiency for the Wellman-Lord process have been specified by Colony (Colony Development Operation, 1977).

The other H_2S removal system examined is the Holmes-Stretford process, which has the capability of treating gas streams with low H_2S concentrations. The Stretford process is a liquid-phase direct conversion system which selectively removes the H_2S and catalytically converts it to elemental sulfur. The process is capable of reducing the H_2S in the treated gas stream to 30 ppmv. Appreciable amounts of carbon dioxide and other non-H_2S sulfur compounds are not removed by the Stretford process.

Tables 5.1-7 through 5.1-9 give the major equipment lists for the DEA, Claus, and Wellman-Lord processes, respectively. The major capital and operating cost items for the Stretford technology are presented in Table 5.1-10. The cost of sulfur control in the TOSCO II plant, using either the DEA/Claus/Wellman-Lord processes or the Stretford process, is presented in Table 5.1-11. Figures 5.1-6 through 5.1-9 provide cost curves that are specific to the design of the DEA, Claus, Wellman-Lord, and Stretford processes examined in this manual. Process descriptions and stream compositions for these technologies are presented in Sections 3 and 4.

TABLE 5.1-7. MAJOR ITEMS IN THE DEA GAS TREATING PROCESS*

Capital Cost Items	Operating Cost Items
Absorbers (5) 4' diameter × 70'	Diethanolamine (DEA) Makeup 65 gpd
Regenerators (4) 12' diameter × 70'	150 psig Steam 330,750 lb/hr
Flash Tanks (8) 7' diameter × 21'	Process Water 368 gpd
Surge Tanks (8) 7' diameter × 35'	Electricity 2,930 kW
Reflux Tanks (8) 3'6" diameter × 14'	Manpower ½ Operator per Shift ½ Supervisor on the Day Shift Only
Lean Amine Pumps (8) 1,619 gpm @ 200 HP	
Still Reflux Pumps (8) 135 gpm @ 10 HP	
Lean DEA/Rich DEA Heat Exchangers (4) 66×10^6 Btu/hr	
Still Reboiler Heat Exchangers (4) 106×10^6 Btu/hr	
Amine Reclaimers (4) 10.6×10^6 Btu/hr	
Still Condenser Aerial Coolers (4) 66×10^6 Btu/hr	
Lean DEA Aerial Coolers (4) 29 MMBtu/hr with a 558-HP Motor	
Site Preparation and Foundations	
Piping	
Electrical	
Instrumentation and Controls	
Painting	

* Design basis: 6,700 ACFM.

Source: SWEC estimates based on information from Maddox, April 1977.

TABLE 5.1-8. MAJOR ITEMS IN THE CLAUS PROCESS*

Capital Cost Items	Operating Cost Items
Reaction Furnace	Boiler Feedwater 43 gpm
Combustion Air Blower	Electricity 825 kW
Waste Heat Boiler	
Catalytic Reactors (3)	
Sulfur Condensers (4)	
Reactor Preheaters (2)	
Sulfur Rundown Tank	
Knock-out Vessel	
Piping	
Electrical	
Instrumentation and Controls	
Site Preparation and Foundations	
Painting	

* Design basis: 14,500 ACFM, 173 LTPSD sulfur recovered.

Source: SWEC estimates based on information provided by Pritchard Corp., September 14, 1981.

TABLE 5.1-9. MAJOR ITEMS IN THE WELLMAN-LORD PROCESS*

Capital Cost Items	Operating Cost Items
Stack 8' diameter × 210'	Na_2CO_3 Makeup 1,728 lb/day
Package Boiler 50×10^6 Btu/hr	Antioxidant 29 lb/day
Spray Tower 16' diameter × 20'	150 psig Steam 19,170 lb/hr
Spray Tower Condenser 2,600 ft^2	Cooling Water 5,760 gpm
Spray Tower Recycle Pumps (2) 2,220 gpm @ 50 HP	Makeup Water 2 gpm
Liquid Vapor Separator 11' diameter × 17'	Fuel 83×10^6 Btu/hr
Absorber 14' diameter × 40'	Electricity 56 kW
Absorber Recycle Pumps (4) 61 gpm @ 1 HP (2) 47 gpm @ 1 HP (2)	Manpower 1 Man/day
Surge Tank 14,000 gal	
Surge Tank Pumps (2) 19 gpm @ 1 HP	
Evaporator-Crystallizer 4' diameter × 12'	
Evaporator-Crystallizer Recycle Pumps (2) 12 gpm @ 1 HP	
Evaporator Heat Exchanger 200 ft^2	
Evaporator Condenser 400 ft^2	

(Continued)

TABLE 5.1-9 (cont.)

Capital Cost Items	Operating Cost Items
Evaporator Liquid-Vapor Separator 1' diameter × 4'	
Dissolving Tank 14,250 gal	
Feed Pumps (2) 30 gpm @ 1 HP	
Storage Tank 6,400 gal	
Absorber Heat Exchanger 630 ft^2	
Weighing Belt	
Piping	
Electrical	
Instrumentation and Controls	
Site Preparation and Foundations	
Painting	

* Design basis: 25,000 ACFM, 173 LTPSD sulfur recovered in the Claus plant.

Source: SWEC estimates based on information from U.S. EPA, January 1975.

TABLE 5.1-10. MAJOR ITEMS IN THE HOLMES-STRETFORD PROCESS*

Capital Cost Items	Operating Cost Items
Knock-Out Drum 10' diameter × 22'	Holmes-Stretford Mix 760 lb/day
Absorber 18' diameter × 75'	Soda Ash 15,222 lb/day
Oxidizers (7) 37' diameter × 62'	Process Water 65 gpm
Pump Tanks (4) 37' diameter × 50'	Steam 4,500 lb/hr
Circulation Pumps (5) 20,000 gpm	Cooling Water 225 gpm
Flash Drums (2) 20' diameter × 50'	Electricity 18,600 kW
Slurry Tanks (2) 35' diameter × 50'	Manpower 2 Men/day
Slurry Pumps (4) 430 gpm	
Filter Systems (5) 8,500 lb/hr	
Sulfur Melters (4) 4×10^6 Btu/hr	
Sulfur Decanters (4) 6' diameter × 17'	
Sulfur Storage Pits (2) 4×10^6 lb	
Evaporators (2) 6,000 gpm	
Heater/Coolers (4) Heating Duty = 10×10^6 Btu/hr Cooling Duty = 5×10^6 Btu/hr	
Plot Area 49,000 ft^2	

* Design basis: 6,700 ACFM, 173 LTPSD sulfur recovered.

Source: SWEC estimates based on information from Peabody Process Systems, Inc., February 1981.

TABLE 5.1-11. COST OF SULFUR POLLUTION CONTROL

Stream Number	Case Studies	Control Description	Control Location	Fixed Capital Cost ($000's)	Total Annual Operating Cost ($000's)	Total Annual Control Cost ($000's)[a]
32 (35)	A, B	Amine (DEA)	Gas Recovery and Treatment[b]	45,900	11,268	18,886
56	A, B	Claus	Amine Overhead	11,740	(829)[c]	1,167
57	A, B	Wellman-Lord	Claus Tail Gas	9,000	2,320	3,878
TOTAL (Case Studies A,B)				66,640	12,759	23,931
32 (35)	C	Stretford	Gas Recovery and Treatment[b]	52,000	5,662	14,240
TOTAL (Case Study C)				52,000	5,662	14,240

[a] See Section 6 for details on computation of the total annual control cost.

[b] Treatment of the C_3 fraction (LPG) of the retort gas could be considered as part of the process, rather than pollution control, because the LPG is prepared for sale.

[c] The value in parentheses ( ) indicates profit after subtracting the total annual capital and operating charges from the annual by-product credit of $781,000 from steam at $3/MMBtu and $1,360,000 from sulfur at $30/long ton.

Source: DRI estimates based on information provided by SWEC.

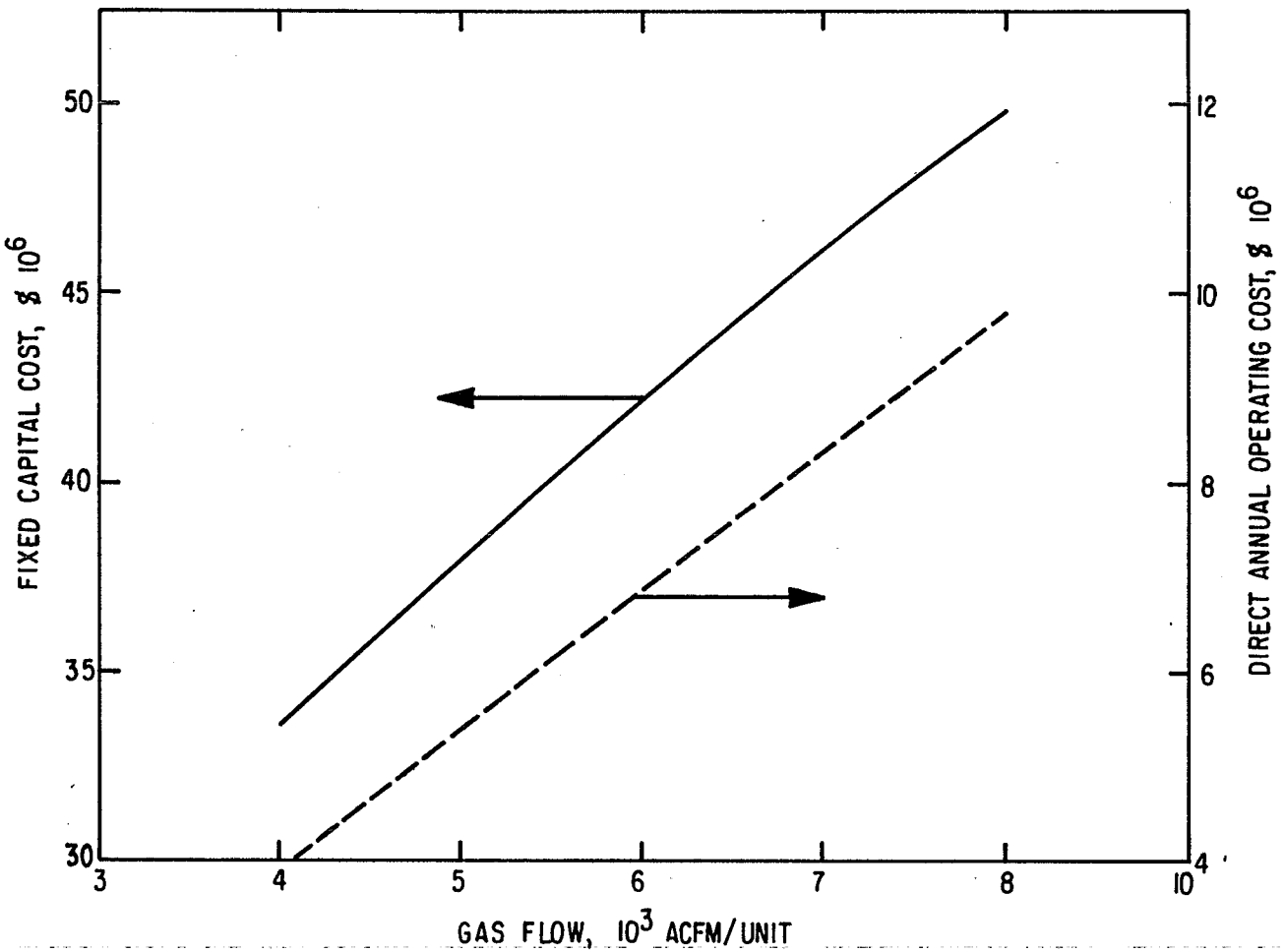

SOURCE: DRI based on information provided by SWEC

FIGURE 5.1-6 COST OF ACID GAS REMOVAL WITH DEA PROCESS

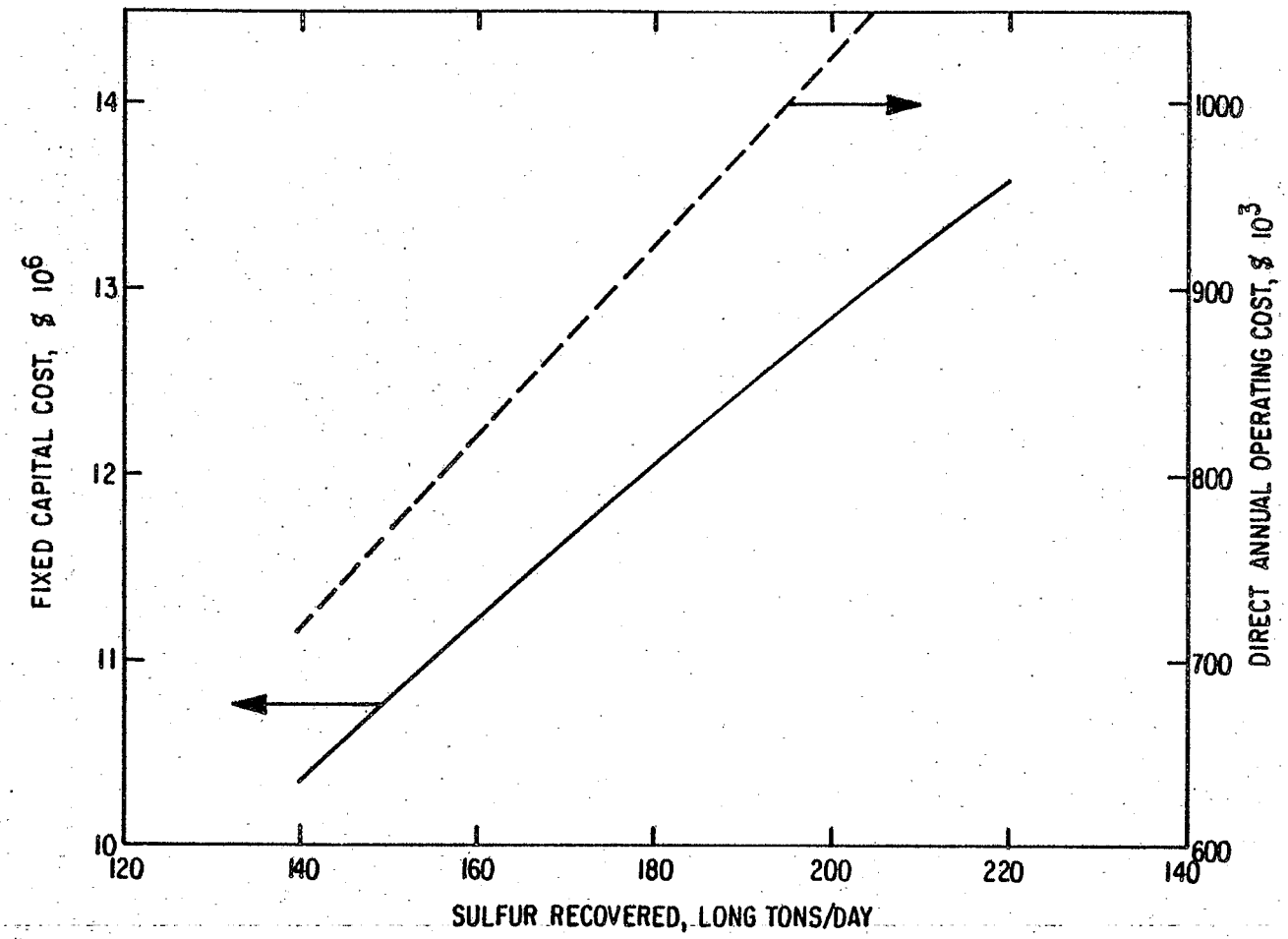

SOURCE: DRI based on information provided by SWEC

FIGURE 5.1-7 COST OF SULFUR RECOVERY WITH CLAUS PROCESS

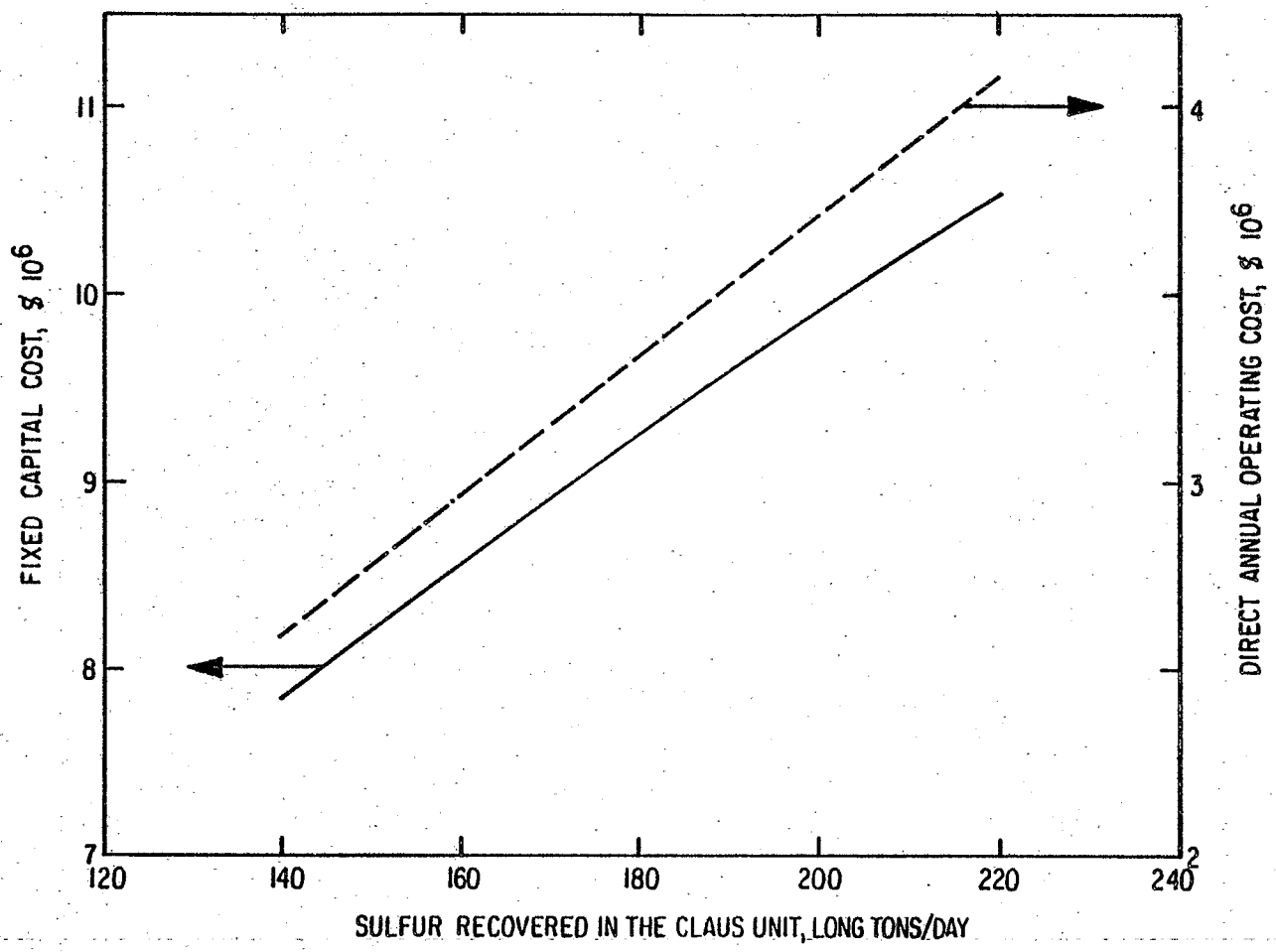

SOURCE: DRI based on information provided by SWEC

FIGURE 5.1-8 COST OF CLAUS TAIL GAS TREATMENT WITH WELLMAN-LORD PROCESS

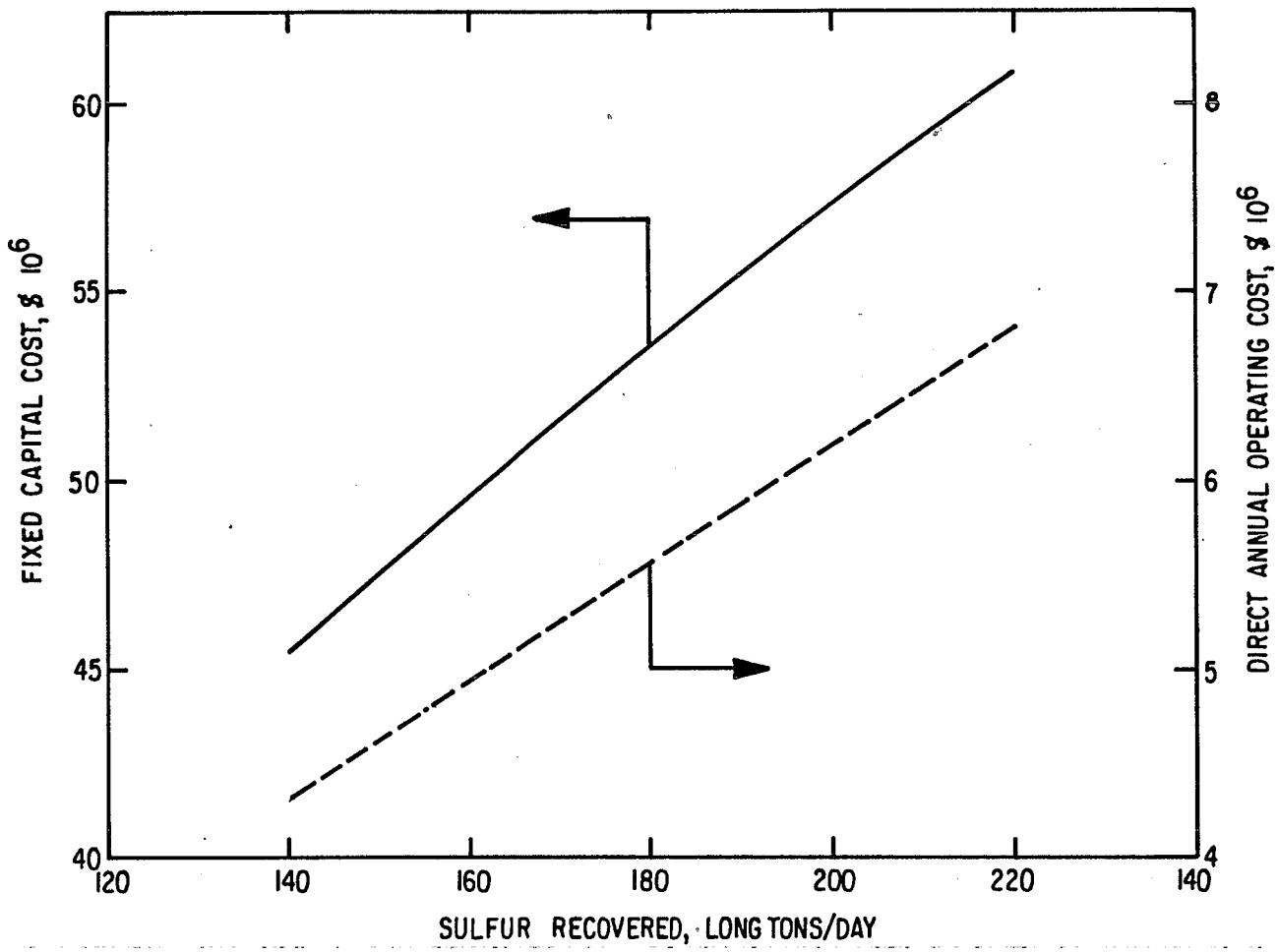

SOURCE: DRI based on information provided by SWEC

FIGURE 5.1-9 COST OF SULFUR RECOVERY WITH STRETFORD PROCESS

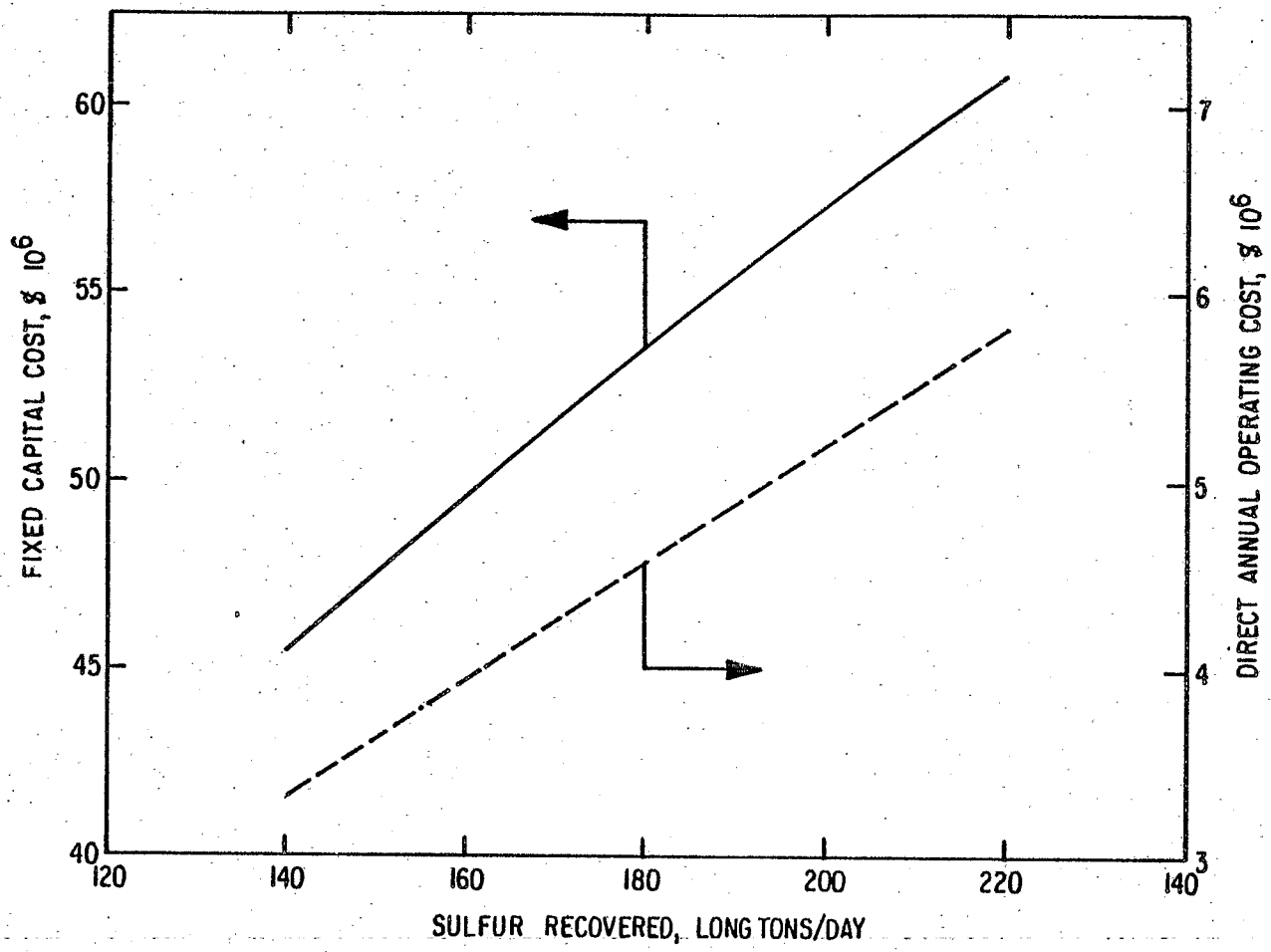

SOURCE: DRI based on information provided by SWEC

FIGURE 5.1-9 COST OF SULFUR RECOVERY WITH STRETFORD PROCESS

Other Sulfur Control Technologies Analyzed--

In addition to the DEA/Claus/Wellman-Lord processes and the Stretford process, the Shell Claus Off-gas Treating (SCOT) and methyldiethylamine (MDEA) processes were analyzed. These technologies have not been proposed by Colony, but they may be applicable to the TOSCO II retort gas.

The SCOT process can be used as an alternate for the Wellman-Lord technology, while the MDEA process can be used as a replacement for the DEA and Wellman-Lord (or SCOT) technologies.

The SCOT technology has been developed specifically for the Claus tail gas cleanup. The sulfur species in the feed stream to the SCOT unit are first converted to SO_2 by incineration, then to H_2S over a catalyst in the presence of a reducing gas. The resulting gas is cooled in a quench tower to knock out moisture, and the H_2S is subsequently absorbed in diisopropanolamine (DIPA). The clean gas is incinerated and then vented to the atmosphere, while the rich amine is regenerated by steam stripping. The H_2S-containing overhead vapors from the DIPA regenerator are recycled to the Claus unit for further recovery of sulfur. A removal efficiency to $\leq$300 ppmv H_2S in the fuel gas is obtainable with the SCOT technology. The DIPA solution absorbs approximately 25% of the CO_2 and recycles it to the Claus unit. Figure 5.1-10 presents the flow scheme for the SCOT process.

The material balances for the Claus and SCOT processes, when applied specifically to the acid gas from the TOSCO II plant, are given in Tables 5.1-12 and 5.1-13. The treated fuel gas is used as the reducing gas (a substoichiometric amount of air is used in the line heater to oxidize the fuel gas to CO and H_2 which then react with SO_2 to produce H_2S and CO_2). To avoid the H_2S odor problem, the SCOT flue gas is incinerated before it is vented to the atmosphere. Table 5.1-14 contains the equipment breakdown, as well as capital and operating costs, for the SCOT process. A cost curve for the process is presented in Figure 5.1-11.

The MDEA process is selective in removing H_2S from a gaseous stream when appreciable quantities of CO_2 are present. The DEA process scrubs out practically all of the CO_2 at 30 ppmv H_2S level in the treated gas. On the other hand, the MDEA process at the same H_2S removal efficiency absorbs only 30-40% of the CO_2. This selectivity results in a significantly lower steam requirement for the MDEA regenerator. In addition, the acid gas stream is smaller in volume, resulting in a reduction in the size of the downstream treatment equipment. The acid gas is also higher in H_2S concentration; therefore, it is more suited as a feed to the Claus process.

A process flow scheme for the MDEA technology is presented in Figure 5.1-12. The operation of this process is similar to the DEA or any other amine process. The acidic gaseous components such as H_2S and CO_2 react with the amine to form rather stable sulfide or carbonate salts; thus, they are retained by the amine. Other gaseous components pass through the amine unreacted. The rich amine solution is then regenerated by steam stripping, where the salts are decomposed back to the amine and the acid gases. The lean amine is recycled, while the acid gases can be treated further.

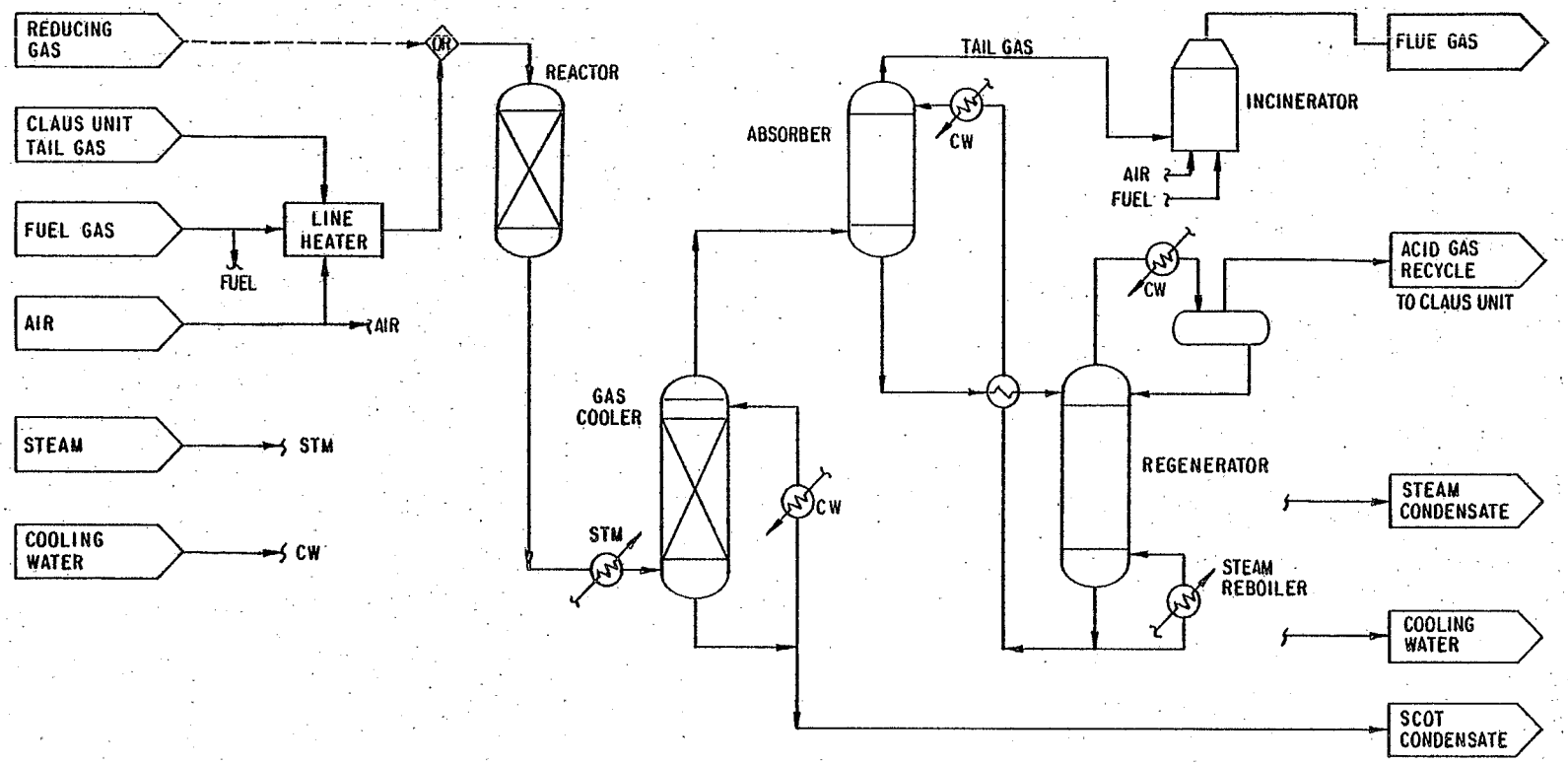

STREAM IDENTITY	FUEL GAS	CLAUS TAIL GAS	REDUCING GAS	AIR	SCOT FLUE GAS	ACID GAS RECYCLE	STEAM CONDENSATE	SCOT CONDENSATE	COOLING WATER	STEAM
FLOW RATE: 10^3 ACFM		25								
10^3 lb/hr	0.9(HEATER) 1.7(INCINER)	148.8	N.D.	12.0(HEATER) 33.2(INCINER)	121.5	27.9		15.2		121
gpm							242		5500	
TEMP, °F	AMB	280	AMB	AMB	N.D.	N.D.	N.D.	N.D.	AMB	460
PRESS., psig	150	5	N.D.	AMB	AMB	N.D.	AMB	AMB	AMB	450

SOURCE: DRI based on Prichard Corp., September 14, 1981

FIGURE 5.1-10 SCOT PROCESS FLOW SCHEME

TABLE 5.1-12. MATERIALS BALANCE FOR THE CLAUS PROCESS

Component	MWt	Mass Flows, lb/hr					
		Acid Gas From Amine	Tail Gas Recycle	Ammonia Recovery Overhead	Incineration Air	Total After Incineration	Claus Tail Gas
H_2S	34	12,281	892	5,335	--	12,362	618
SO_2	64	--	--	--	--	11,635	582
COS	60	60	--	--	--	--	--
CO_2	44	78,280	26,110	--	--	104,434	104,434
H_2O	18	194	852	3,172	240	7,800	14,017
N_2	28	--	--	--	29,075	29,098	29,098
O_2	32	--	--	--	8,831	--	--
NH_3	17	--	--	56	--	--	--
NO	30	--	--	--	--	49	49
TOTAL		90,815	27,854	8,563	38,146	165,378	148,798

Source: SWEC estimates based on information from Pritchard Corp., September 14, 1981.

TABLE 5.1-13. MATERIALS BALANCE FOR THE SCOT PROCESS

Component	MWt	Mass Flows, lb/hr										
		Fuel Gas	Combustion Air	Claus Tail Gas	Total After Combustion	Total After Reduction	SCOT Condensate	Acid Gas Recycle	Flue Gas Before Incineration	Incineration Fuel	Incineration Air	Flue Gas After Incineration
H_2S	34	--	--	618	--	927	--	892	35	--	--	--
SO_2	64	--	--	582	1,745	--	--	--	--	--	--	66
CO_2	44	6	--	104,434	104,434	106,834	--	26,110	80,724	11	--	85,509
H_2	2	26	--	--	55	--	--	--	--	52	--	--
CO	28	61	--	--	1,527	--	--	--	--	121	--	--
CH_4	16	381	--	--	--	--	--	--	--	759	--	--
C_2H_4	28	249	--	--	--	--	--	--	--	497	--	--
C_2H_6	30	145	--	--	--	--	--	--	--	289	--	--
C_3H_6	42	10	--	--	--	--	--	--	--	19	--	--
C_3H_8	44	5	--	--	--	--	--	--	--	9	--	--
H_2O	18	--	76	14,017	15,624	15,624	15,163	852*	2,491*	--	209	6,093
N_2	28	--	9,138	29,098	38,236	38,236	--	--	38,236	--	25,294	63,530
O_2	32	--	2,775	--	--	--	--	--	--	--	7,682	1,230
NO	30	--	--	49	49	49	--	--	49	--	--	49
TOTAL		883	11,989	148,798	161,670	161,670	15,163	27,854	121,535	1,757	33,185	156,477

* A portion of the water originates from the amine solution.

Source: SWEC estimates based on information provided by Pritchard Corp., September 14, 1981.

TABLE 5.1-14. MAJOR ITEMS IN THE SCOT PROCESS*

Capital Cost Items	Operating Cost Items	
Feed Heater	DIPA Makeup	
	4 gpd	
Fixed Bed Reactor		
	Fuel Gas	
Waste Heat Boiler	1,970 CFM	
Cooling Tower	Cooling Water	
	5,500 gpm	
Cooling Tower Pumps (2)		
	Electricity	
Cooling Tower Condenser	1,650 kW	
Amine Absorber	Manpower	
	½ Man/day	
Amine Pumps (2)		
	Direct Annual Operating Cost, 10^3	
Absorber Cooler	Maintenance	214
	Operating Supplies	7
Stripper	Labor	39
	Electricity	1,375
Absorber/Stripper Heat Exchanger	TOTAL	1,635
Stripper Condenser		
Reflux Drum		
Reflux Pumps (2)		
Stripper Reboiler		
Lean Solution Pumps (2)		
Piping		
Electrical		
Instrumentation and Controls		
Site Preparation and Foundations		
Painting		
Fixed Capital Cost, 10^3 8,295		

* Design basis: 25,000 ACFM, 173 LTPSD sulfur recovered in the Claus plant.

Source: SWEC estimates based on information provided by Pritchard Corp., September 14, 1981.

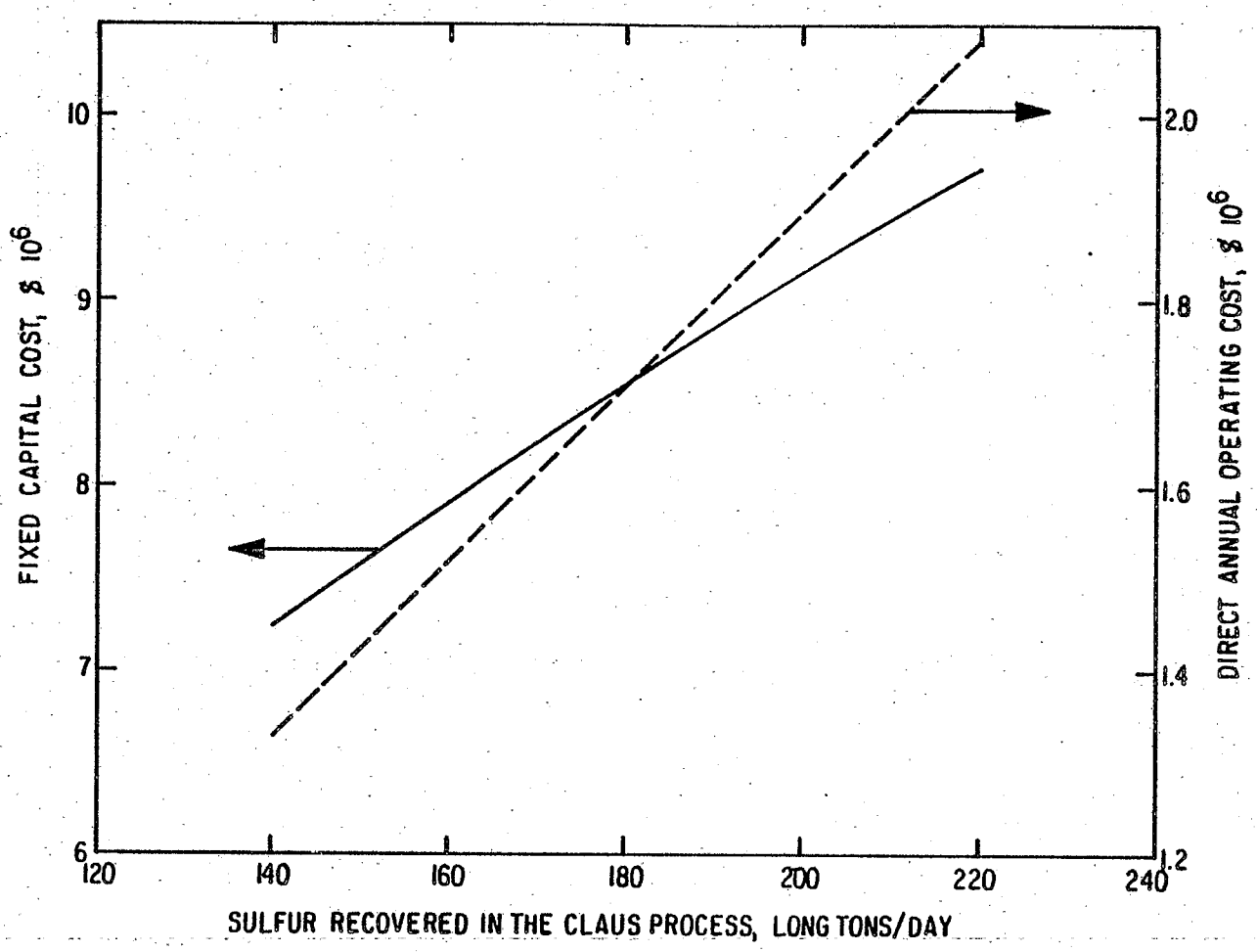

SOURCE: DRI based on information provided by SWEC

FIGURE 5.1-11 COST OF CLAUS TAIL GAS TREATMENT WITH SCOT PROCESS

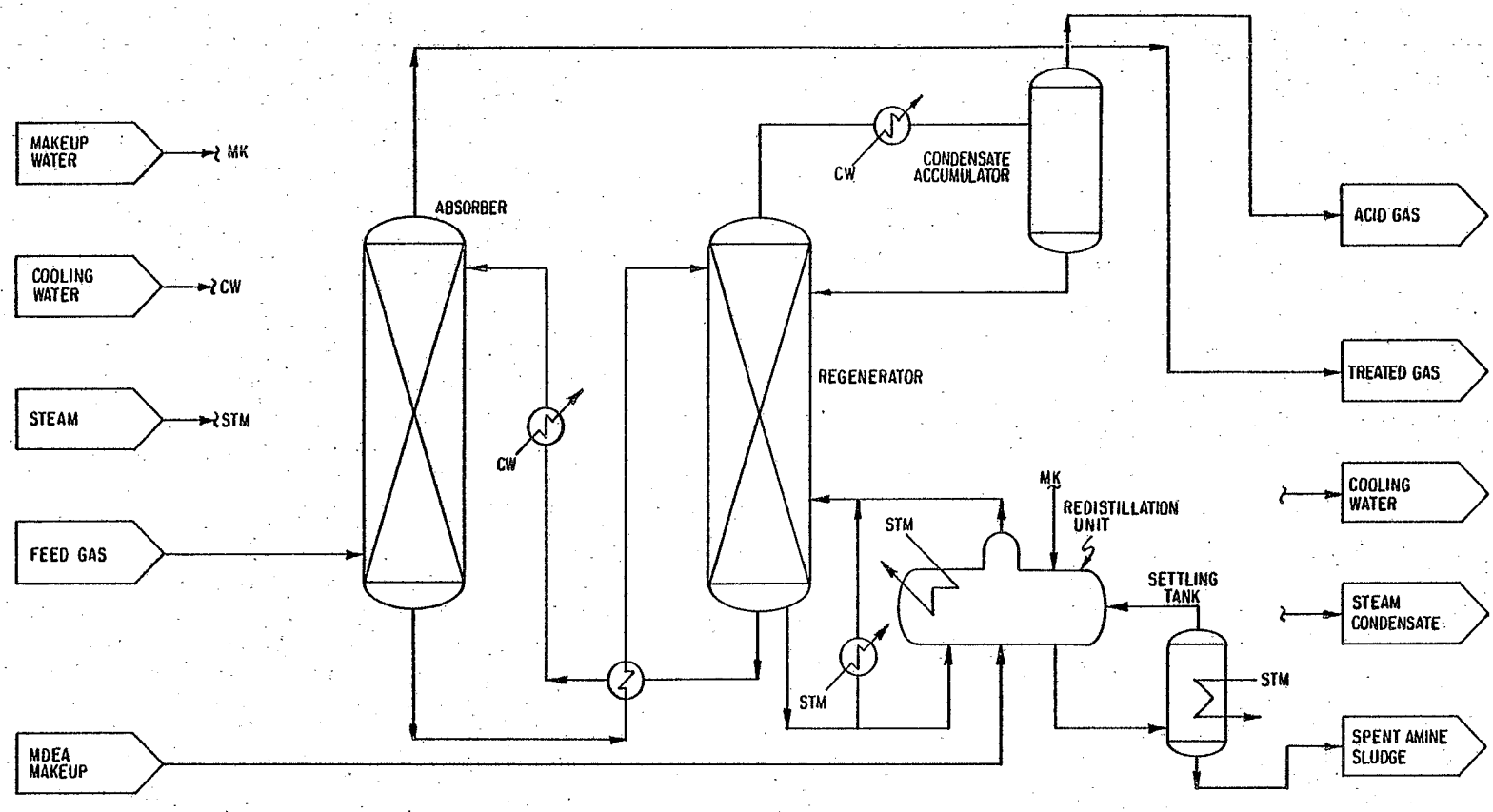

STREAM IDENTITY	FEED GAS	MDEA MAKEUP	COOLING WATER	STEAM	MAKEUP WATER	TREATED GAS	ACID GAS	COOLING WATER RETURN	STEAM CONDENSATE	SPENT AMINE SLUDGE
FLOW RATE: 10^3 ACFM										
10^3 lb/hr	213.1	0.05		22.1		177.1	36.0			
gpm			N.D.		N.D.			N.D.	44	N.D.
TEMP., °F	N.D.	AMB	AMB	350	AMB	N.D.	←		→	N.D.
PRESS., psig	150	AMB	AMB	150	AMB	150	N.D.	AMB	AMB	AMB

SOURCE: DRI based on Pearce, 1978

FIGURE 5.1-12 MDEA PROCESS FLOW SCHEME

The MDEA process can also be used in the Claus tail gas cleanup. Its operation would be similar to the SCOT process, except the DIPA solution in the SCOT process would be replaced with the MDEA solution.

Table 5.1-15 gives the composition of the TOSCO II retort gas before and after MDEA treatment. The C_3/C_4 gases may be similarly treated. Table 5.1-16 presents the capital and operating cost components of the MDEA process as an acid gas removal technology as well as a tail gas treatment technology. Specific cost curves for the two applications are presented in Figure 5.1-13.

TABLE 5.1-15. RETORT GAS COMPOSITION BEFORE AND AFTER MDEA TREATMENT

Component	MWt	Untreated Gas lb/hr	Treated Gas Mass %	Treated Gas Mole %	Treated Gas Mass Flow, lb/hr	Treated Gas Flow, lb-moles/hr
H_2S	34	12,197	0.005	0.003	8.8*	0.26
RSH	56	14.5	0.008	0.003	14.5	0.26
COS	60	120	0.03	0.01	60	1.0
H_2	2	3,590	2.03	20.82	3,590	1,795.0
CO	28	8,380	4.73	3.47	8,380	299.3
CO_2	44	79,070	31.26	14.59	55,350	1,258.0
CH_4	16	52,510	29.65	38.06	52,510	3,281.9
C_2H_4	28	34,383	19.42	14.24	34,383	1,228.0
C_2H_6	30	19,958	11.27	7.72	19,958	665.3
C_3H_6	42	1,324	0.75	0.37	1,324	31.52
C_3H_8	44	652	0.37	0.17	652	14.82
H_2O	18	932	0.48	0.54	843	46.83
TOTAL		213,130.5	100.00	100.00	177,073.3	8,622.2
MWt			20.54			
Total H			14.64		25,930.6	
Total O			25.45		45,059.1	
Total C			59.41		105,192.9	
Total S			0.03		47.8	

* Assuming the after treatment concentration of 30 ppmv H_2S.

Source: DRI estimates based on information provided by SWEC.

TABLE 5.1-16. MAJOR ITEMS IN THE MDEA PROCESS

Acid Gas Removal[a]		Tail Gas Treatment[b]	
Capital Cost Items	Operating Cost Items	Capital Cost Items	Operating Cost Items
Absorbers (2) 1-7' diameter × 52' 1-3' diameter × 36'	MDEA Makeup 50 lb/hr	Absorber 9' diameter × 40'	MDEA Makeup 0.7 lb/hr
Stripper 3' diameter × 30'	150 psig Steam 22,140 lb/hr	Stripper 11.5' diameter × 60'	150 psig Steam 8,370 lb/hr
Flash Tank 4,000 gal	Electricity 1,075 kW	Flash Tanks (2) 6' diameter × 18'	Electricity 3,190 kW
Surge Tank 11,000 gal	Manpower 2 Men/day	Surge Tanks (2) 6' diameter × 30'	Manpower 2 Men/day
Amine/Amine Heat Exchanger 24,700 ft^2	Direct Annual Operating Cost, $\$10^3$ Maintenance 480 Operating Supplies 17 Labor 138 Steam 591 Electricity 255 TOTAL 1,481	Reflux Tank 2' diameter × 8'	Direct Annual Operating Cost, $\$10^3$ Maintenance 244 Operating Supplies 7 Labor 138 Steam 284 Electricity 149 TOTAL 822
Still Condenser 17,110 ft^2 285-HP fan		MDEA Pump 1,360 gpm @ 125 HP	
Lean Amine Cooler 31,350 ft^2 830-HP fan		Reflux Pump 1,400 gpm @ 9 HP	
Still Reboiler 24,810 ft^2		Amine/Amine Heat Exchanger 16,000 ft^2	
Amine Reclaimer 2,480 ft^2		Lean Amine Cooler 20,000 ft^2 530-HP fan	
Reflux Tank 2,150 gal		Still Condenser 10,900 ft^2 182-HP fan	
MDEA Pump 2,500 gpm @ 310 HP		Still Reboiler 15,800 ft^2	
Still Reflux Pump 10 HP		Amine Reclaimer 1,600 ft^2	
Piping		Piping	
Electrical		Electrical	
Instrumentation and Controls		Instrumentation and Controls	
Site Preparation and Foundations		Site Preparation and Foundations	
Painting		Painting	
Fixed Capital Cost, $\$10^3$ 19,000		Fixed Capital Cost, $\$10^3$ 9,420	

[a] Design basis: 2,500 gpm MDEA circulated.

[b] Design basis: 1,360 gpm MDEA circulated.

Source: SWEC.

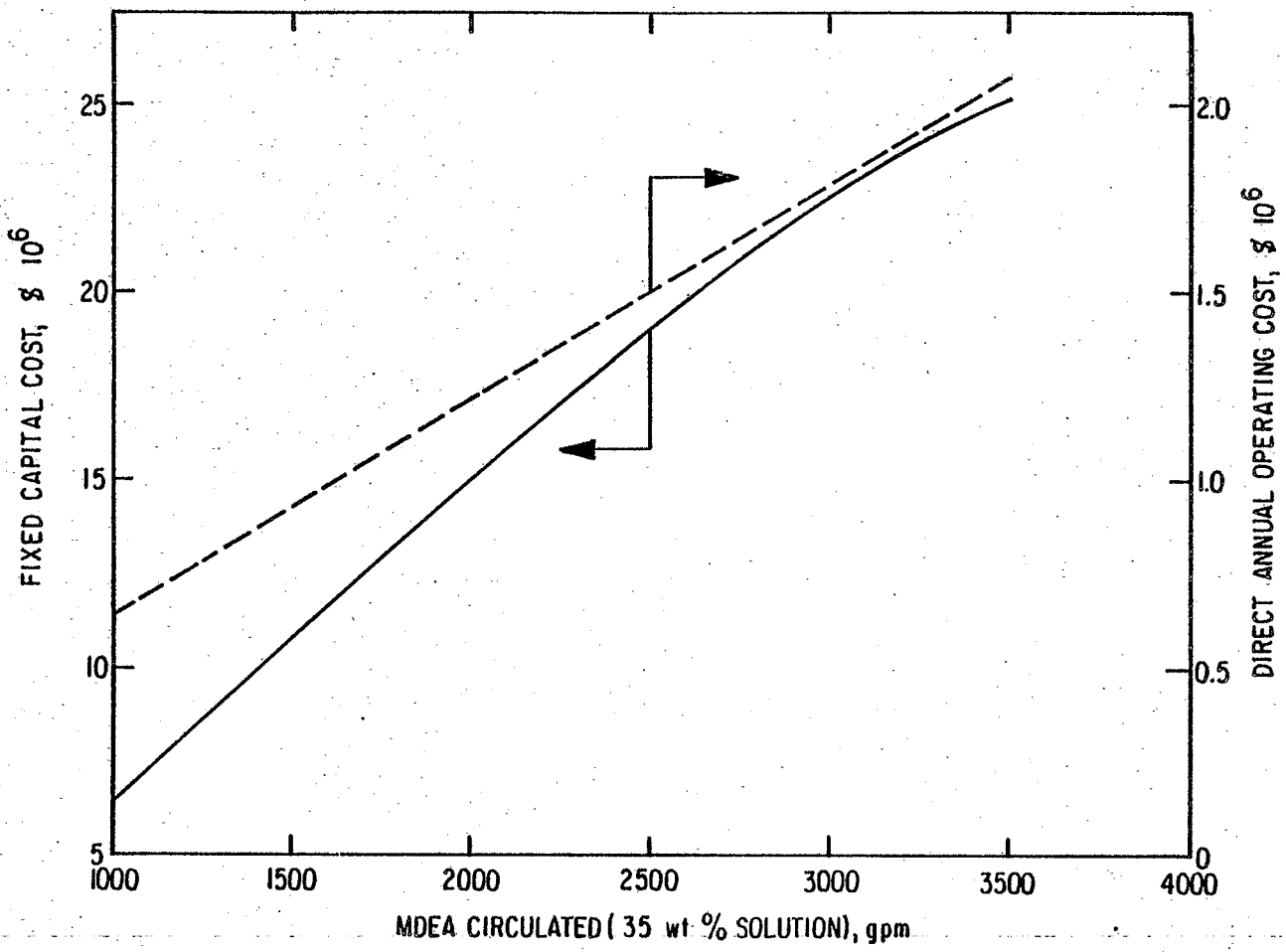

SOURCE: DRI based on information provided by SWEC

FIGURE 5.1-13 COST OF ACID GAS REMOVAL AND TAIL GAS TREATMENT WITH MDEA PROCESS

Total Sulfur Emissions--

The four major sources of sulfur emissions (as SO_2) from the TOSCO II plant are:

- Ball heater/thermal oxidizer
- Ball circulation system stack
- Tail gas from the Wellman-Lord unit
- Process heaters/furnaces and utility boilers.

The ball heater burns the treated fuel gas (135 ppmv H_2S) and untreated shale oil, while the thermal oxidizer uses the C_4 liquids and untreated shale oil as the fuels. The major source of SO_2 in these systems is the shale oil, as it contains approximately 0.9% sulfur by weight. The total SO_2 emissions from these sources would be in excess of 1,100 lb/hr; however, Colony claims that about 95% of the SO_2 is absorbed on the raw shale, thus only 5% of the SO_2 is emitted to the atmosphere (Colony Development Operation, 1977). The ball circulation system emits the flue gas from the steam superheater which also burns the crude shale oil. The tail gas from the Wellman-Lord process contains approximately 105 lb/hr of SO_2 (at a sulfur removal efficiency of 92%). All process heaters and furnaces and the utility boilers consume the treated fuel gas; therefore, they emit insignificant amounts of SO_2, with the noted exception of the hydrogen unit furnaces. These furnaces consume a large quantity of the fuel gas, hence emit a significant quantity of SO_2. The fuel needs for various heating systems have been provided in Tables 4.2-22 and 4.2-23. The total SO_2 emissions from the plant are presented in Table 5.1-17.

5.1.3 Nitrogen Oxides Control

In oil shale processes, nitrogen enters the system from two primary sources: (1) the fuels derived from the raw shale, and (2) the air required for combustion in the various furnaces, heaters, auxiliary boilers and incinerators. A portion of this nitrogen is converted into other forms such as nitrogen oxides (NOx) and ammonia (NH_3). The NOx produced during fossil fuel combustion are emitted as NO and NO_2 in flue gases. These compounds are formed from the oxidation of nitrogen compounds (e.g., ammonia, cyanides) in the shale-derived fuels and/or from the fixation of atmospheric nitrogen (N_2). A large portion of ammonia resulting from the pyrolysis of the shale is usually removed in the gas condensate, or foul water, when the retort gas is cooled or scrubbed with water. This removal and subsequent recovery of ammonia provide an indirect control over NOx emissions. Since the recovery of ammonia from an aqueous solution also constitutes water pollution control, this aspect of the NOx control is discussed under water management (Section 5.2). The portions of ammonia and fuel-based nitrogen that are not removed in the gas condensate may require removal or control prior to emission to the environment. Federal and Colorado State standards and regulations limit NOx emissions because of their potential role in the formation of photochemical smog and acid precipitation.

TABLE 5.1-17. TOTAL SO_2 EMISSIONS FROM THE PLANT

Stream Number	Emission Source	Control Description	SO_2 Emissions (lb/hr) Case Studies A,B[a]	C[b]
18	Raw Shale Preheat System	c	51.0	44.7
19	Ball Circulation System	--	94.3	94.3
57	Sulfur Plant	Wellman-Lord	94.5	--
91	Hydrogen Furnace	d	27.4	23.9
104	Coker Feed Heater	d	2.8	2.4
118	Gas Oil Heater	d	0.9	0.8
119	Gas Oil Reboiler	d	3.8	3.3
125	Naphtha Heater	d	0.4	0.3
138	Diesel Equipment	--	20.0	20.0
179	Utility Boilers	d	7.2	6.3
TOTAL			302.3	196.0

[a] The SO_2 emissions have been taken from Colony's PSD permit application.

[b] The data are calculated. The emission from the preheat system has been reduced by 95%, as claimed by Colony.

[c] Amine is the primary control for the process fuel. Adsorption of SO_2 on the raw shale serves as the secondary control.

[d] Amine (or Stretford) is the primary control as the treated fuel gas is used.

Source: DRI estimates based on Colony Development Operation, 1977.

Inventory of Control Technologies--

There are three categories of NOx control technologies:

- Reduction of nitrogen in the fuel
- Combustion modifications
- Stack gas removal.

These processes are shown in Figure 5.1-14 and are discussed briefly in Table 5.1-18.

Reduction of nitrogen in the fuel. Burning fuels low in nitrogen is the simplest method of controlling NOx emissions arising from fuel-based nitrogen. Hydrotreatment of fuel oils and water scrubbing of fuel gases are fairly effective in removing the fuel-based nitrogen.

Combustion modifications. The generation of NOx by thermal fixation of atmospheric nitrogen is dependent upon the flame temperature, concentration of nitrogen, time history of individual combustion gas pockets, and the amount of excess air present. To some extent, these variables are controllable, and the production of NOx can be minimized for a particular combustion process.

Combustion control of NOx may be accomplished by several methods. One approach is design and operation of burners with fuel-rich mixture ratios. This technique, called off-stoichiometric combustion, produces low flame temperatures and, hence, potentially low NOx formation. A significant excess of oxygen is avoided in the combustion zone by diverting some portion of the inlet air through remote locations in the burner or through entirely separate secondary combustion air ports.

Another NOx reduction technique, based on combustion modification, takes advantage of the strong temperature dependency of nitric oxide (NO) formation on peak combustion temperatures. Reduced flame temperatures may be obtained by direct reduction of gas temperature or by indirectly increasing heat transfer. Direct techniques include recirculating product flue gases back into the combustion zone where they serve as diluents absorbing heat, thereby reducing maximum flame temperatures achieved. Other direct techniques are reduced combustion air preheat and water/steam injection. The latter is more applicable to gas turbines. Indirect NOx reduction relating to the combustion process usually involves furnace designs with increased burner spacing and heat removal capability. Flame temperature reduction does not reduce NOx formation from fuel nitrogen but does reduce atmospheric N_2 fixation.

Stack gas removal. Flue gas treatment for NOx removal is a relatively new, developing technology. Two broad categories may be defined: wet processes in which NOx is absorbed into an aqueous solution, and dry processes in which NOx is reduced by ammonia.

The wet NOx removal processes also serve as a mechanism to reduce sulfur dioxide emissions and, as such, can provide effective environmental control

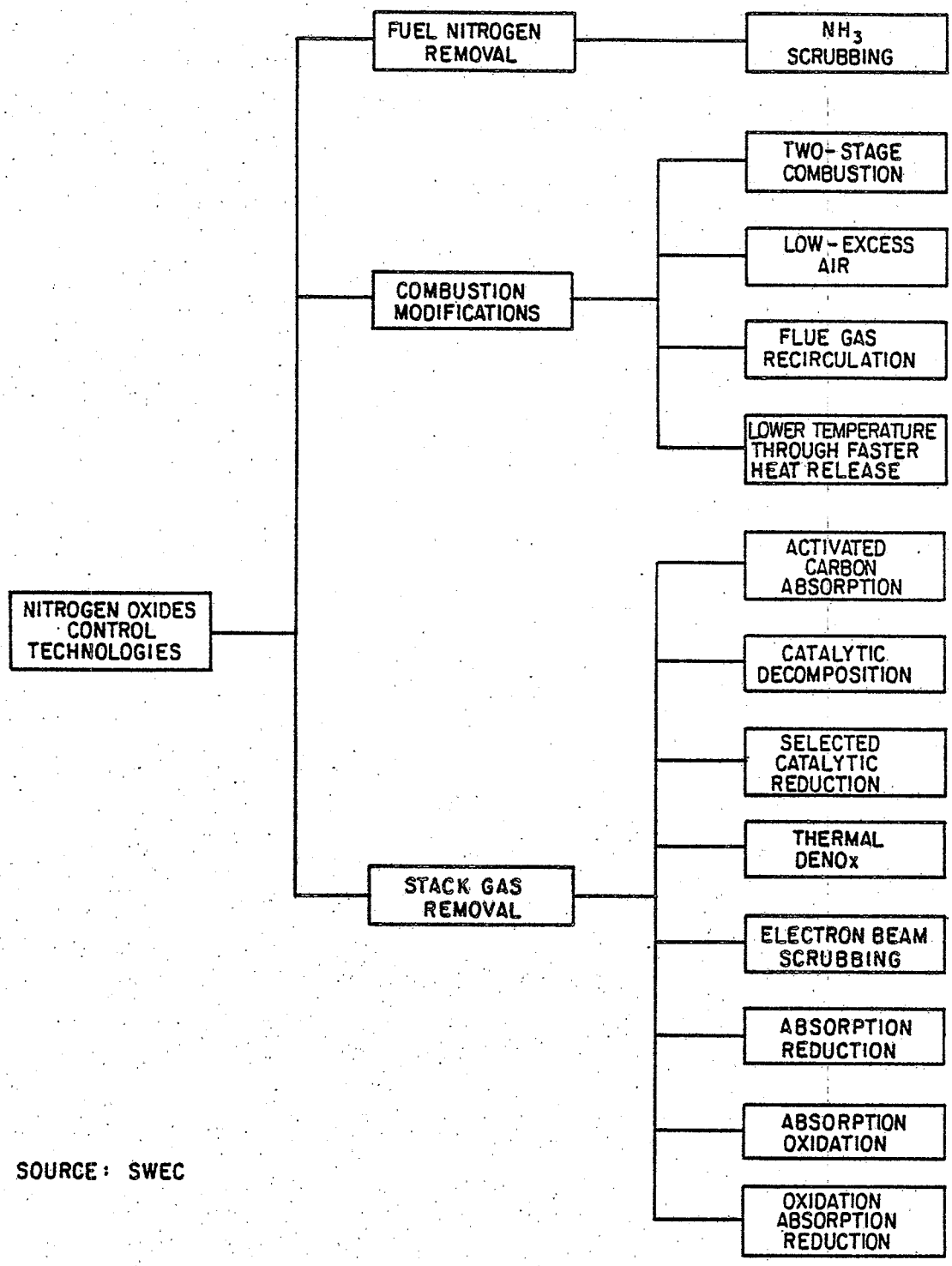

SOURCE: SWEC

FIGURE 5.1-14 NITROGEN OXIDES CONTROL TECHNOLOGIES

TABLE 5.1-18. KEY FEATURES OF NITROGEN OXIDES CONTROL TECHNOLOGIES

Control Technology	Operating Principle	Performance	Development Status	Advantages	Disadvantages
FUEL NITROGEN REMOVAL					
NH_3 Scrubbing	Absorption of NH_3 by counter-current scrubbing with water.	Up to 100% of NH_3 removal possible by changing water rate, composition and temperature.	Commercially proven.	Removes source of NOx before formed. By-product NH_3 is produced.	Does not reduce NOx emissions formed by thermal fixation of nitrogen and oxygen in combustion air.
COMBUSTION MODIFICATIONS					
Two-Stage Combustion (either low-emission burners or engineered combustion box)	Air is introduced in two zones. Zone 1) combustion occurs under reducing conditions; Zone 2) additional air added to complete combustion.	40-60% of thermal NOx reduction. Less reduction for fuel-nitrogen.	Burners and boiler designs commercially available.	Burner system is inexpensive in relation to total cost.	Reducing zone can cause boiler tube damage.
Low-Excess Air	Reduce excess air available to reduce reaction kinetics of N-radical and O_2 reaction.	10-20% NOx reduction.	Commercially proven.	Requires only operational changes.	Boiler is more difficult to operate. Possible increase in CO/HC emissions.
Flue Gas Recirculation (FGR)	Some flue gas recirculated to combustion zone to reduce peak temperature in furnace.	Up to 20% NOx reduction.	Commercially proven.	Useful in controlling outlet steam temperatures.	High capital and operating cost.
Lower Temperature Through Faster Heat Release	A larger boiler is used to reduce temperature in the furnace.	Up to 20% NOx reduction.	Commercially proven.	Results in significant reduction of NOx.	Difficult to implement in existing plants.
STACK GAS REMOVAL OF NOx					
Activated Carbon Adsorption	Adsorption of NOx (and SO_2) on activated carbon.	70-100% NOx, 72-90% SO_2 removal.	Sumitomo Huy Ind -1- plant discontinued operation due to high cost.	Simultaneous removal of SO_2 and NOx.	High consumption of carbon and fuel.
Catalytic Decomposition	No data available.		R.M. Parsons conceptual stage.		
Selective Catalytic Reduction (SCR)	NOx reduced by NH_3 over a catalyst (all processes similar using various proprietary catalysts).	Up to 90% NOx removal.	Four processes in commercial-scale operation, 20 processes available.	Low operating temperatures and low consumption of NH_3.	Particulates and SO_3 can cause catalyst plugging and poisoning. High capital cost.

(Continued)

TABLE 5.1-18 (cont.)

Control Technology	Operating Principle	Performance	Development Status	Advantages	Disadvantages
Thermal DeNOx	NH_3 injected in a 1,300-1,800°F flame zone where $NO + NH_3 \rightarrow N_2 + H_2O$.	Up to 70% NOx removal.	Demonstrated commercially.	By-product recovery not required. Low capital cost.	Requires large amounts of NH_3. Narrow operating range.
Electron Beam Scrubbing	Removal of SO_2 and NOx by reaction with NH_3 in the presence of electrons. Products are $(NH_4)_2SO_4$ + NH_4NO_3.	Up to 85% NOx, 90% SO_2 removal.	Pilot plant stage only.	Simultaneous removal of SO_2 and NOx.	Power consumption is 3% of plant output for beam accelerator. High capital cost. Requires high efficiency ESP.
Absorption Reduction	NOx is converted to NH_3 by the reducing effect of SO_2 to make $(NH_4)_2SO_4$ with a liquid Fe EDTA catalyst in a 20-tray column.	70-85% NOx, 90% SO_2 removal.	Not demonstrated commercially.	No oxidizing agent required.	Requires an expensive column. Consumes large quantities of NH_3 and H_2SO_4.
Absorption Oxidation	NOx and SO_2 are absorbed in a $KOH/KMnO_4$ solution and are oxidized to KNO_3 and K_2SO_4.	No data available.	Not demonstrated commercially.	Simultaneous removal of SO_2 and NOx.	Costly due to consumption of KOH and regeneration of $KMnO_4$.
Oxidation Absorption Reduction	Either O_3 or ClO_2 are used to oxidize NO to NO_2.	Up to 85% NOx, 95% SO_2 removal if SO_2/NOx ratio is 2.5.	Not demonstrated commercially.	Simultaneous removal of SO_2 and NOx.	Chloride in the waste stream causes disposal problems. Nitrate formation can also cause disposal problems. Oxidation material is very expensive.

Source: SWEC based on information from Battelle, Columbus Laboratories, October 1978.

TABLE 5.1-19. TOTAL NOx EMISSIONS FROM THE PLANT

Stream Number	Emission Source	NOx Emissions (lb/hr)
10	Mine Vent	250.0
18	Raw Shale Preheat System	1,314.8
19	Ball Circulation System	113.4
91	Hydrogen Furnace	82.2
104	Coker Feed Heater	8.4
118	Gas Oil Heater	2.7
119	Gas Oil Reboiler	11.2
125	Naphtha Heater	1.3
138	Diesel Equipment	267.9*
179	Utility Boilers	21.6
TOTAL		2,073.5

Source: Colony Development Operation, 1977, except the quantity noted with an asterisk (*) was estimated by SWEC.

in government regulations restricting their emission. Federal and State regulations limit these hydrocarbon emissions because of their role in the formation of photochemical smog and ozone production.

Inventory of Control Technologies--

As illustrated in Figure 5.1-15 and discussed in Table 5.1-20, hydrocarbon emissions can be controlled by the following categories of control technologies:

- Additional sealing of process equipment
- Vapor recovery
- Complete fuel combustion
- Catalytic converters
- Thermal oxidizers.

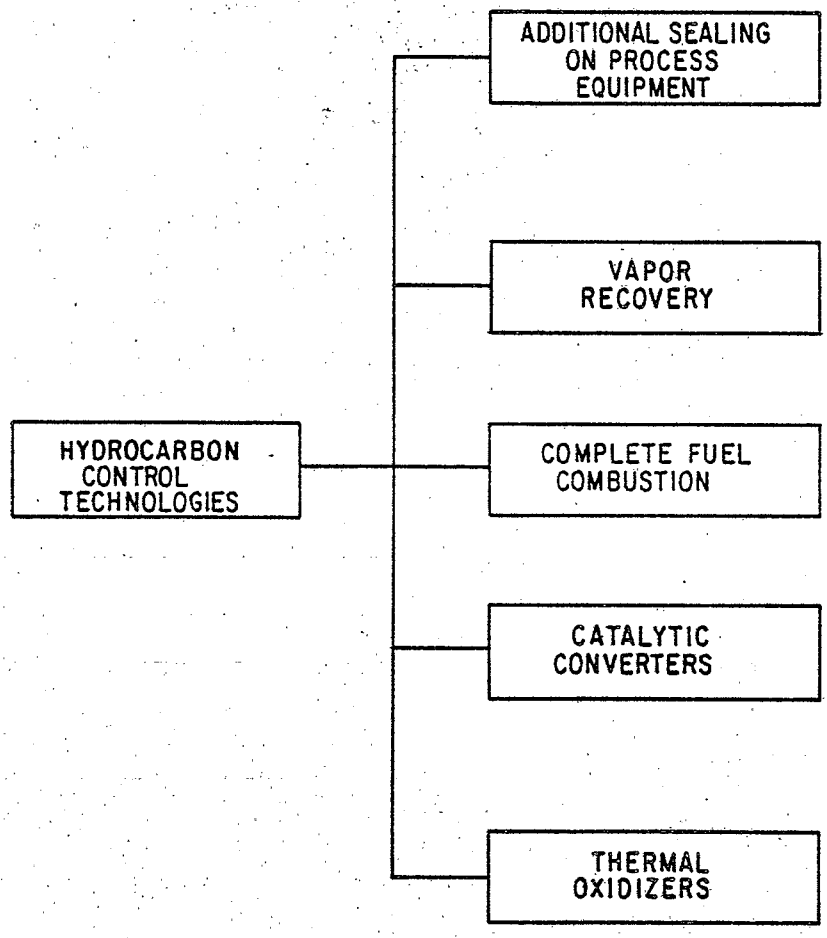

SOURCE: SWEC

FIGURE 5.1-15 HYDROCARBON CONTROL TECHNOLOGIES

TABLE 5.1-20. KEY FEATURES OF HYDROCARBON CONTROL TECHNOLOGIES

Control Technology	Operating Principle	Performance	Development Status	Advantages	Disadvantages
Additional Sealing on Process Equipment	Double seals on pumps and rotating machinery and caps on open-ended valves reduce hydrocarbon losses from the equipment.	About 60%-65% reduction of fugitive hydrocarbon emissions is possible with this level of control.	Commercially proven.	Requires a small capital and operating cost and will probably more than pay for this cost due to the value of the hydrocarbons which are prevented from being emitted.	Should be implemented during new plant construction. Requires more capital investment to retrofit the controls of an existing plant.
Vapor Recovery	Hydrocarbon vapors emitted from process equipment are collected and condensed by refrigeration and then returned to the process.	About 80-90% of the hydrocarbon vapors can usually be condensed and returned to the system.	Commercially proven.	A reliable system which is best applied to potential point source emission streams.	Can be a high energy requirement to operate the refrigeration system.
Complete Fuel Combustion	Combustion process is operated with excess air to ensure complete oxidation of all hydrocarbons to CO_2 and H_2O.	Can convert close to 100% of all hydrocarbons in the fuel to CO_2 and H_2O.	Commercially proven.	Eliminates the need for downstream equipment to complete the conversion of CO to CO_2.	An adequate air:fuel ratio must be maintained.
Catalytic Converters	Hot exhaust gas is passed over a catalyst where the unburned hydrocarbons are reacted with the excess air in the exhaust gas and are converted to CO_2 and H_2O.	Can convert up to 80% of the hydrocarbons in diesel exhaust gas streams to CO_2 and H_2O; for other fuel burning processes, up to 99% conversion is possible.	Commercially proven.	Does not require any fuel and has no moving parts so that routine maintenance is minimal.	The catalyst, which is expensive, must be replaced periodically.
Thermal Oxidizers	Waste gas streams containing unburned hydrocarbons are burned with excess air and additional fuel if needed to completely oxidize all hydrocarbons to CO_2 and H_2O.	Can convert close to 100% of all hydrocarbons in the gas stream to CO_2 and H_2O.	Commercially proven.	Will ensure complete oxidation of hydrocarbons and any other unwanted components in the gas stream.	Can have a high energy requirement when supplemental fuel is used.

Source: SWEC based on information from Research and Education Association, 1980.

Additional sealing of process equipment. Hydrocarbon emission control by additional sealing of process and storage equipment is best accomplished by engineering these features into the plant. This includes double seals on tanks, pumps, and other rotating machinery, closed-loop sampling, caps on open-ended valves, and periodic monitoring of equipment to find hydrocarbon leaks quickly. This will result in a minimum additional plant capital cost and will more than pay for itself due to the value of the hydrocarbons which are prevented from being emitted.

Vapor recovery. When hydrocarbon vapor emissions cannot be controlled by additional sealing of equipment, a vapor recovery system can be installed to collect and condense the vapors by refrigeration and return them to the process.

Complete fuel combustion. The most cost-effective way to control hydrocarbon emissions from fuel combustion processes is to operate the process with enough excess air to ensure complete oxidation of all hydrocarbons to CO_2 and H_2O, i.e., complete fuel combustion.

Catalytic converters. When complete fuel combustion does not occur, the hot exhaust gas from the process can be sent through a catalytic converter. In the catalytic converter, the gas is passed over a catalyst where the unburned hydrocarbons are reacted with the excess air in the exhaust gas and are converted to CO_2 and H_2O.

Thermal oxidizers. Hydrocarbon vapor streams or any other waste gas stream containing unburned hydrocarbons can be burned in a thermal oxidizer with excess air and additional fuel, if needed; this completely oxidizes all hydrocarbons to CO_2 and H_2O.

Hydrocarbon Control Technologies Analyzed--

The hydrocarbon emissions in the TOSCO II plant emanate from the leakage in the valves, pumps, etc., as the fugitive emissions from oil product storage, and due to the incomplete combustion of the fuels.

A thermal oxidizer system was examined for controlling the hydrocarbon vapors generated in the lift pipes in order to reduce the emissions from the preheat system. The oxidizer system burns additional fuel in order to incinerate hydrocarbons picked up by the hot flue gas during preheating of the fine, raw shale. This system has been proposed by Colony (Colony Development Operation, 1977).

Hydrocarbon emissions from diesel-burning equipment are controlled by installation of catalytic conversion systems. The least costly fugitive hydrocarbon emissions control for storage tanks is proper sealing. Alternatively, vapor recovery can be used, but the expense is extremely high for these systems. As a standard industry practice, double-sealed, floating roof storage tanks are provided for volatile product storage. Internal plant leaks are controlled by use of adequate seals and strict maintenance procedures. The furnace and boiler stacks emit partially burned hydrocarbons.

Except for using proper combustion practices, no other technologies are provided for controlling hydrocarbons from the fuel combustion sources.

Table 5.1-21 lists the design parameters for the thermal oxidizer, while Table 5.1-22 lists other hydrocarbon control practices and equipment considered. Table 5.1-23 presents the costs for hydrocarbon control for the entire plant. A cost curve for the thermal oxidizer is presented in Figure 5.1-16.

TABLE 5.1-21. MAJOR ITEMS IN THE THERMAL OXIDIZER*

Capital Cost Items	Operating Cost Items
Oxidizer with Brick Liner	Fuel
Piping	610×10^6 Btu/hr
Electrical	Maintenance
Instrumentation and Controls	
Supports	
Painting	

* Design basis: 2,080,200 ACFM.

Source: SWEC.

TABLE 5.1-22. HYDROCARBON CONTROL PRACTICES AND EQUIPMENT

Capital Cost Items	Operating Cost Items
Floating Roof Storage Tanks 1 - 150' diameter × 40', 150,000 bbl 2 - 140' diameter × 40', 219,000 bbl total Welded API 650 code Double seals Carbon steel	Maintenance
Complete Combustion of Fuels	
Dual Mechanical Seals on Pumps and Valves	
Catalytic Converters on all Diesel Equipment	
Monitoring Equipment	

Source: SWEC.

TABLE 5.1-23. COST OF HYDROCARBON POLLUTION CONTROL

Stream Number	Control Description	Control Location	Number of Units	Fixed Capital Cost ($000's)	Total Annual Operating Cost ($000's)	Total Annual Control Cost ($000's)[a]
18	Thermal Oxidizers	Raw Shale Preheat System	6	23,120	17,205	21,242
10, 138	Catalytic Converters	Diesel Equipment	--	100	37	75
28	Low Flare and Thermal Oxidizer	Gas Recovery and Treating Unit	1	810	26	157
--	Floating Roof Storage Tanks	Product Storage	3	350	(1)[b]	54
--	Maintenance	Valves, Pumps, etc.	--	50	(35)[b]	(23)[b]
TOTAL				24,430	17,232	21,505

[a] See Section 6 for details on computation of the total annual control cost.

[b] Values in parentheses ( ) indicate profit after subtracting the total annual capital and operating charges from the annual by-product credit of $12,000 from the storage tanks and $86,000 from maintenance, both at $32/bbl of oil.

Source: DRI estimates based on information provided by SWEC.

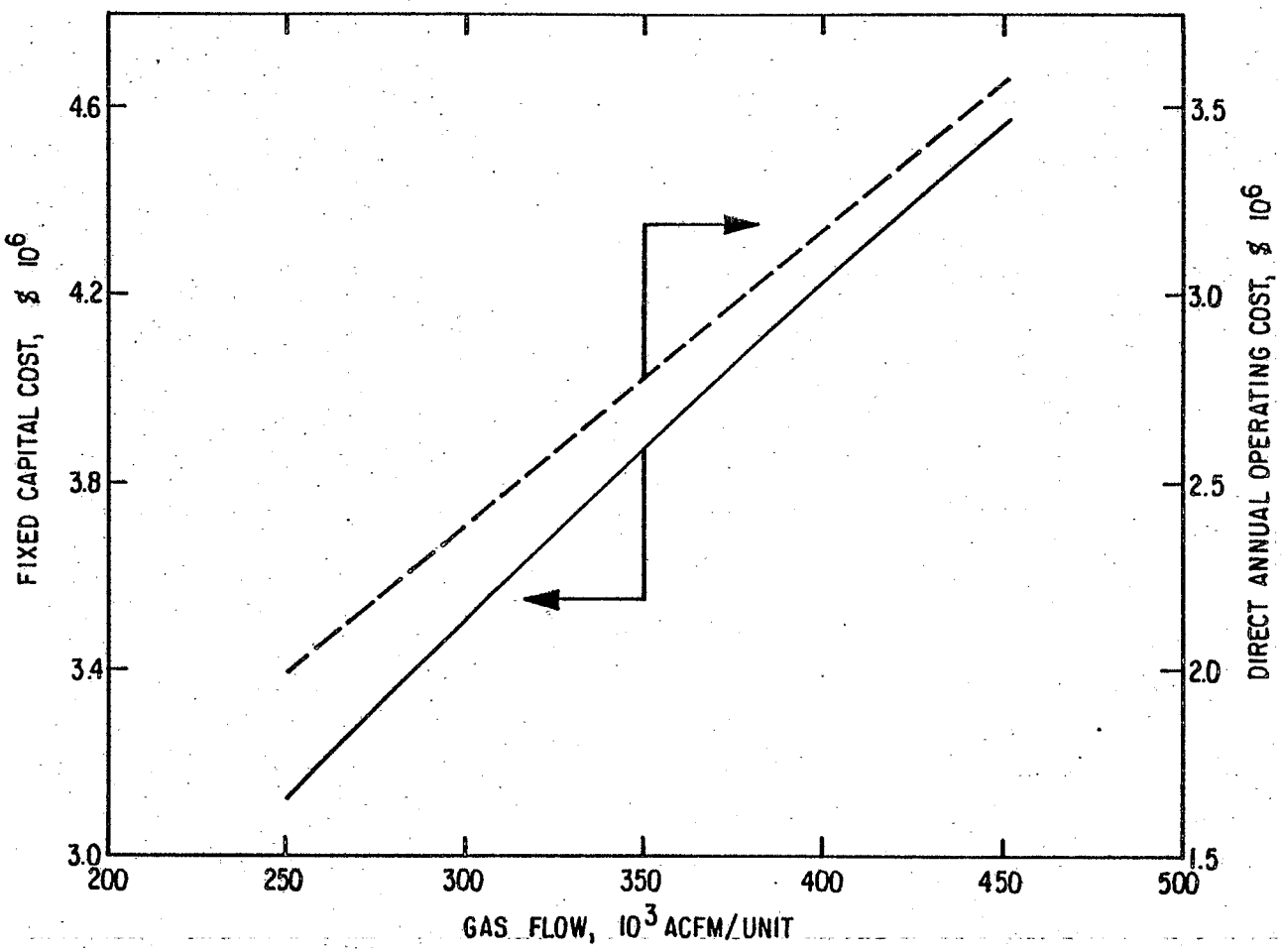

SOURCE: DRI based on information provided by SWEC

FIGURE 5.1-16 COST OF HYDROCARBON CONTROL WITH THERMAL OXIDIZER

Total Hydrocarbon Emissions--

Table 5.1-24 summarizes the hydrocarbon emission sources and control equipment used for the emissions.

TABLE 5.1-24. TOTAL HYDROCARBON EMISSIONS FROM THE PLANT

Stream Number	Emission Source	Control Description	Hydrocarbon Emissions (lb/hr)
10	Mine Vent	--	50.0
18	Raw Shale Preheat System	Thermal Oxidizer	270.0
19	Ball Circulation System	--	0.3
91	Hydrogen Furnace	--	1.6
104	Coker Feed Heater	--	0.2
118	Gas Oil Heater	--	0.1
119	Gas Oil Reboiler	--	0.2
125	Naphtha Heater	--	0.1
138	Diesel Equipment	Catalytic Converters	7.7*
179	Utility Boilers	--	0.4
--	Product Storage	Floating Roof Storage Tanks	24.4*
--	Valves, Pumps, etc.	Maintenance	28.0*
TOTAL			383.0

Source: Colony Development Operation, 1977, except those quantities noted with an asterisk (*) were estimated by SWEC.

5.1.5 Carbon Monoxide Control

Carbon monoxide (CO) is usually formed by incomplete combustion of fossil fuels. Normally, an excess of oxygen is supplied to a combustion process to ensure that all of the carbon in the fuel is converted to carbon dioxide (CO_2). When a shortage of oxygen occurs in the combustion process, some of the carbon is only partially oxidized to CO. Federal and State standards and regulations limit CO emissions because of their deleterious effect on the human respiratory system.

The easiest and most cost-effective way to control CO emissions is to use excess oxygen in the combustion processes to ensure complete combustion. When incomplete combustion does occur, catalytic converters or thermal or chemical oxidizers may be used to oxidize the remaining CO to CO_2.

Inventory of Control Technologies--

Figure 5.1-17 shows a list of the applicable carbon monoxide control technologies, and Table 5.1-25 describes in detail the features of these control methods.

Complete fuel combustion controls CO emissions by not allowing them to be formed. This is done by operating with enough excess air to ensure complete oxidation of all carbon to CO_2 instead of only partial oxidation to CO. When CO is formed in a combustion process, a catalytic converter or thermal or chemical oxidizer can be used.

Carbon Monoxide Control Technologies Analyzed--

Diesel equipment will be used in mining activities, processed shale handling, and transportation systems at the TOSCO II facility. The CO emissions from these sources are controlled by using catalytic converters on all diesel engines. Since the catalytic converters also control hydrocarbon emissions, they have been included under hydrocarbon emission control.

Process fuels are burned in the thermal oxidizer, ball circulation system, and process heaters/furnaces and utility boilers. The CO emissions from these sources are controlled by operating the units with 20 to 25% excess air to ensure complete oxidation of all carbon to CO_2. This is a standard combustion practice, so no additional equipment or cost is associated with it.

Total Carbon Monoxide Emissions--

Table 5.1-26 summarizes the carbon monoxide emission sources and control equipment used for the emissions.

5.1.6 Control of Other Criteria Pollutants

In addition to the primary air pollutants discussed so far, there may be other criteria pollutants, such as lead, mercury, beryllium and fluorides, emitted from the TOSCO II facility. Some of these pollutants are nonvolatile; therefore, they may be released only as fugitive dust constituents. Any control of the dust will also serve to control the nonvolatile pollutants. Volatile pollutants may potentially be released with the stack gases. Some pollutants do not occur naturally and some are unlikely to form during oil shale processing.

5.1.7 Control of Noncriteria Air Pollutants

Meaningful test data are not available to determine whether emissions of noncriteria air pollutants are a concern. Consequently, no information on

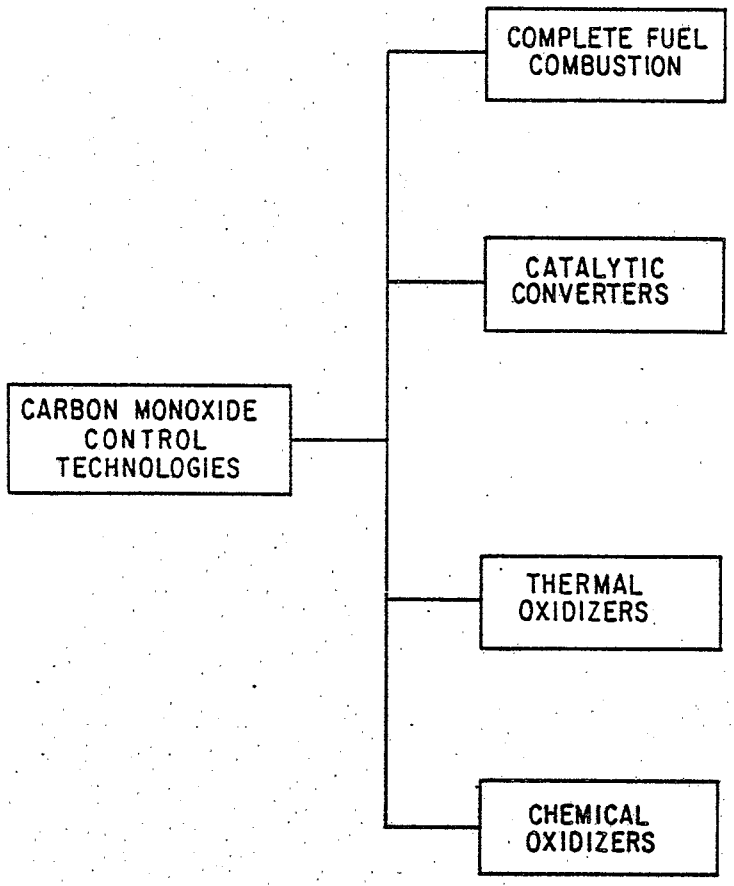

SOURCE: SWEC

FIGURE 5.1-17 CARBON MONOXIDE CONTROL TECHNOLOGIES

TABLE 5.1-25. KEY FEATURES OF CARBON MONOXIDE CONTROL TECHNOLOGIES

Control Technology	Operating Principle	Performance	Development Status	Advantages	Disadvantages
Complete Fuel Combustion	Combustion process is operated with excess air to ensure complete oxidation of all carbon to CO_2, instead of only partial oxidation to CO.	Can convert close to 100% of all carbon in the fuel to CO_2.	Commercially proven.	Eliminates the need for downstream equipment to complete the conversion of CO to CO_2.	An adequate air:fuel ratio must be maintained.
Catalytic Converters	Hot exhaust gas is passed over a catalyst where the CO in the gas is reacted with the excess air in the exhaust gas and is converted to CO_2.	Can convert up to 90% of all CO in diesel exhaust gas to CO_2; for other fuel burning processes, up to 99% conversion is possible.	Commercially proven.	Does not require any fuel and has no moving parts so that routine maintenance is minimal.	The catalyst, which is expensive, must be replaced periodically.
Thermal Oxidizers	Waste gas streams containing CO are burned with excess air and additional fuel if needed to completely oxidize all CO to CO_2.	Can convert up to 100% of all CO in the gas stream to CO_2.	Commercially proven.	Will ensure complete oxidation of CO to CO_2 and complete oxidation of any other unwanted components in the gas stream.	Can have a high energy requirement when supplemental fuel is used.
Chemical Oxidizers	Gas streams containing CO are scrubbed with a solution containing a chemical oxidizing agent which oxidizes the CO to CO_2.	Can convert up to 99% of all CO in the gas stream to CO_2.	Commercially proven.	Oxidizes the CO to CO_2 without using fuel to heat up the entire gas stream.	Requires the use of expensive chemicals.

Source: SWEC based on information from Research and Education Association, 1980.

TABLE 5.1-26. TOTAL CO EMISSIONS FROM THE PLANT

Stream Number	Emission Source	Control Description	CO Emissions (lb/hr)
10	Mine Vent	--	440.0
18	Raw Shale Preheat System	--	43.9
19	Ball Circulation System	--	2.8
91	Hydrogen Furnace	--	9.9
104	Coker Feed Heater	--	1.0
118	Gas Oil Heater	--	0.4
119	Gas Oil Reboiler	--	1.4
125	Naphtha Heater	--	0.2
138	Diesel Equipment	Catalytic Converters	23.0*
179	Utility Boilers	--	2.6
TOTAL			525.2

Source: Colony Development Operation, 1977, except the quantity noted with an asterisk (*) was estimated by SWEC.

control technologies for such pollutants was generated for this manual. Mention of species such as POMs (U.S. EPA, 1980) and trace elements such as arsenic (Fox, Mason and Duvall, 1979; Girvin, Hadeishi and Fox, June 1980) are noted.

5.2 WATER MANAGEMENT AND POLLUTION CONTROL

As in other industries and oil shale operations, the TOSCO II plant--from mining activities to final product and waste disposition--will produce water effluents which will require proper disposal. These effluents may contain the following pollutants:

- Suspended Matter, Oil and Grease
- Dissolved Gases and Volatiles
- Dissolved Inorganics
- Dissolved Organics.

This section describes the current, commercially available alternate systems for controlling the above pollutants. The following subsections provide inventories of control technologies for each of the pollutant classes, a discussion of advantages and disadvantages, and important points to consider in selecting a particular technology. The performance, design, and cost data for the leading technologies are also presented.

5.2.1 Suspended Matter, Oil and Grease

Undissolved matter found in wastewater effluents includes solid particles as well as oils and greases. The solids are usually the raw and processed shale particles that are washed into the retort water and those that are entrained in the retort vapors and subsequently removed in the gas condensates. The retort water and gas condensate also contain trapped oil and oil-in-water emulsions. Service and storm runoffs contain suspended matter, as well as oils and greases. Also, the source water contains suspended soil particles and debris.

In general, the control of suspended matter at oil shale plants will be accomplished using conventional technology. For example, clarification in gravity settlers (with addition of flocculants) and multimedia filtration will, in most cases, provide adequate control. Associated energy consumption and costs are generally low.

The control of undissolved oils and greases in oil shale wastewaters has not been studied in detail. API-type gravity settlers have the potential to provide adequate control for most of the waste streams generated. It is possible, however, that some wastewaters will contain oil-in-water emulsions; if so, additional control steps may be required. Heating the water or adding chemicals may be sufficient to break the emulsion; otherwise, filter coalescence (or possibly ultrafiltration) may be required.

The degree to which emulsified oil needs removal is dependent on downstream processing and reuse. In cooling towers, the oil may foul heat exchange surfaces and thus require prior removal. Similarly, fouling, and possibly foaming, may occur when stripping the retort water or gas condensate. The extent to which such problems will arise is not known.

The energy consumption and cost of oil separation by gravity means are generally low. Thermal or chemical treatment, if required, would cause some increase in costs. Filter coalescence and, in particular, ultrafiltration generally are more costly and would be considered only if other procedures prove inadequate.

Inventory of Control Technologies--

Figure 5.2-1 shows different types of technologies that apply to control of suspended matter and oils and greases. Key features of these technologies are provided in Table 5.2-1.

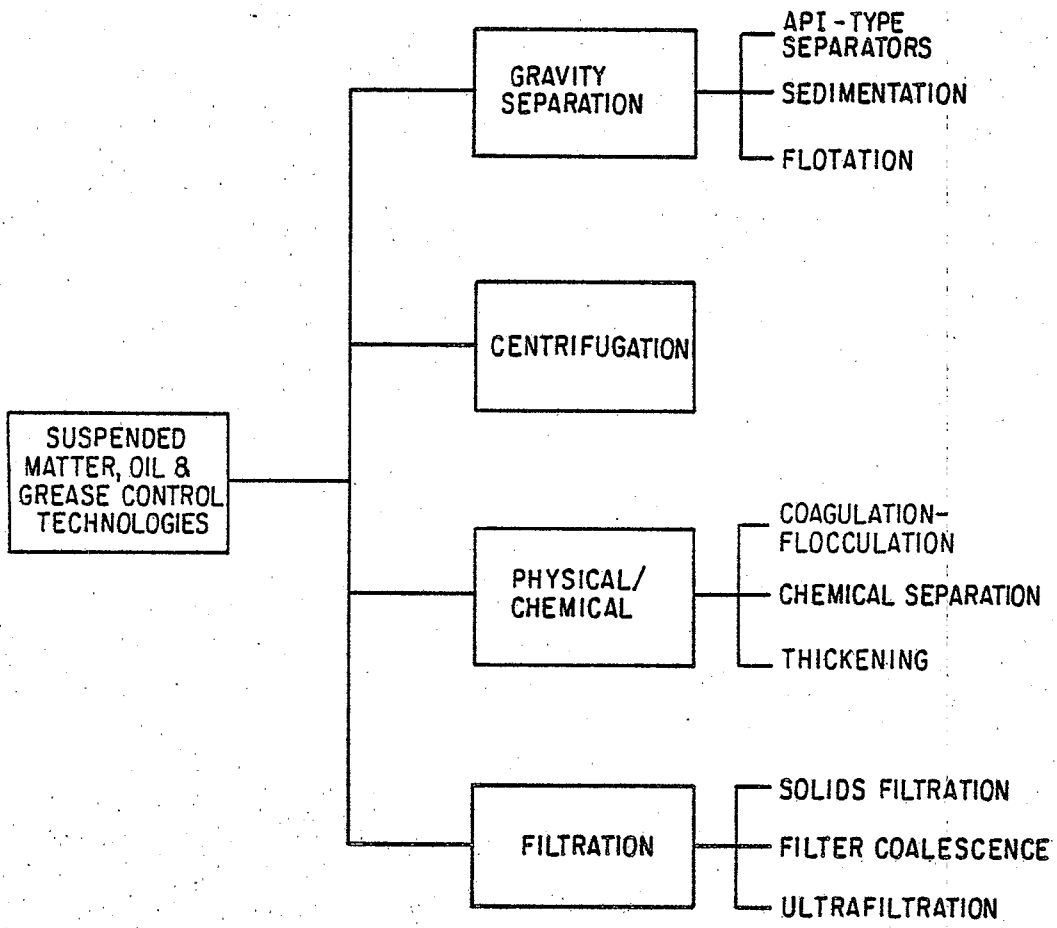

SOURCE: WPA

FIGURE 5.2-1 SUSPENDED MATTER, OIL AND GREASE CONTROL TECHNOLOGIES

TABLE 5.2-1. KEY FEATURES OF CONTROL TECHNOLOGIES FOR SUSPENDED MATTER, OILS AND GREASES

Control Technology	Operating Principle	Components Removed	Removal Efficiency	Feed Requirements/ Restrictions	By-products and Wastes	Comments
Gravity Separation (API-type Separators, Sedimentation, Flotation)	Provision of adequate residence time in a stagnant vessel to allow suspended matter to separate into lighter and heavier than water components. Extra surfaces may be included to save space (lamella settler), or rising air bubbles may be used to assist separation (dissolved air flotation).	Suspended solids, tars, oils, immiscible liquids.	90+% removal of TSS typical for sedimentation, 50% for flotation.	Minimum feed stream turbulence.	Oils, sludges, solids.	Not useful for emulsions or very fine particles.
Centrifugation	A greater than gravity force field is applied by rapid rotation to accelerate the separation.	As above.	As above.		As above.	More expensive than gravity separation. Used for predrying sludges from gravity separation devices or for separation of fine particles.
Physical/Chemical (Coagulation-Flocculation, Chemical Separation, Thickening)	Use of agents to promote the coalescence of fine suspended solids, tars and oils. Generally used in conjunction with a gravity separation process.	Promotes removal of finely dispersed particles.	90+% removal of fine solids is achievable with proper design.	A wide range of commercial flocculants are available.	Same as gravity separation.	Widely used in makeup water treatment systems to remove fine solids.
Filtration (Solids Filtration, Filter Coalescence, Ultrafiltration)	Involves passing wastewater through a suitable filter medium. Filter material is discarded or cleaned by backflushing.	Depends on medium. Both coarse and fine structure materials are used industrially.	90-99% is typical.	Filter media (sand,clay, fabric or polymeric membrane).	Filter backwash, spent filter media.	Filter coalescence or ultrafiltration are useful for oil emulsions.

Source: WPA.

API-type separators. For gravity separation of oil in large holding tanks, separators should be designed within the following limits: (a) horizontal velocity of less than 3 fpm, (b) depth between 3-8 ft, and (c) depth-to-width ratio of approximately 0.4. Oil is skimmed from the surface and collected for reuse or disposal. Gravity separation is not effective for emulsified oils that might be present in some retort waters (American Petroleum Institute, 1969).

Sedimentation. This is a gravity process in which the solid phase settles and is withdrawn as a slurry. Clarification may be carried out in large holding ponds, plate (lamella) settlers or hydrocyclones. Chemicals (flocculants and coagulants) may be added to precipitate salts (softening) or to aid settling of suspended solids (Humenick, 1977).

Flotation. This is a gravity process in which the solid phase rises to the surface and is skimmed off as a slurry. Air bubbles may be introduced into the flotation vessels to assist separation (Humenick, 1977).

Centrifugation. This is a modified gravity method to afford separation or settling of fine, suspended matter and oils. The wastewater is subjected to a radial force greater than the gravity field by rapidly rotating it. Suspended matter denser than water moves radially away from the center of rotation, while the lighter matter moves toward the center. Concentrated matter can be removed periodically or in a continuous manner. For continuous operations, the sludge should be fluid to facilitate its removal. The technology may not be applicable to highly viscous fluids.

Coagulation - flocculation. Fine particles suspended in a fluid are subjected to size enlargement by addition of chemicals (coagulants and flocculants), then allowed to settle by gravity or under applied force. Gentle agitation alone sometimes may afford the flocculation of the particles. The technology may also be applicable to liquid dispersions and liquid particulates.

Chemical separation. Addition of chemicals to break emulsion may be used in conjunction with filtration and is normally followed by gravity separation. The type and dosage of chemicals required is determined by trial (American Petroleum Institute, 1969). Chemicals may also be added to precipitate salts or to increase crystal size.

Thickening. Slurries previously obtained from gravity, centrifugation, and filtration methods can be further concentrated, or thickened, by addition of chemical agents or binders. The thickened slurry may then be subjected to the same methods for final disposition (Adams and Eckenfelder, 1974; Humenick, 1977).

Solids filtration. The water stream is passed through a filter medium which holds back the solid phase. Filters may be of the fabric type, as in plate and frame, rotating drum (vacuum) and cartridge units, or granular, as in sand filters. Filtration is generally more expensive than sedimentation but can remove smaller particles (Humenick, 1977).

Filter coalescence. Gravity separation of oil from water is standard industrial and refinery practice; however, the API-type separators are inadequate for very small oil particles. One very important method for removal of small oil droplets is coalescence (Water Purification Associates, December 1975).

When a dispersion of micron-sized droplets of one liquid (oil) in another (water) flows through an appropriate porous solid, coalescence of the dispersed phase is induced and separation of the liquids results. The dispersed phase can be allowed to accumulate without leaving the porous medium, with periodic regeneration to remove accumulated oil.

Filter media are usually either the packed fibrous type (e.g., fiber glass, steel wool) or unconsolidated granular materials (e.g., sand, gravel, crushed coal). Because of their large specific surface and high voids, fibrous media are usually more efficient in removing droplets for a given bed depth than are granular media. However, fibrous media are more susceptible to blockage by suspended solids and are more difficult to regenerate, in addition to being more costly than most granular media.

Advantages of filter-coalescers include high separation efficiency for dilute suspensions of very small droplets, potentially small space requirements, the possibility of continuous operation, and the potential for the recovery of the dispersed phase. Disadvantages of this process are that suspended solids can accumulate to require frequent medium regeneration or replacement, and pumping costs can be substantial. As far as is known, the system has not been evaluated on retort waters, and extensive pilot plant testing would be required to determine its feasibility on these waters.

Ultrafiltration. Passage through a submicron-sized membrane filter separates emulsified oil as well as suspended matter and large organic molecules (MWt $\geqq$ 1,000). The oil droplets are collected in the concentrate and removed by gravity separation. This process is significantly more costly than normal filtration (Water Purification Associates, December 1975).

Control Technologies Analyzed--

The streams that require removal of suspended matter, oils and greases are:

- River Water (stream 140)
- Foul Water (stream 29)
- Runoffs and Leachates (streams 12, 177, 178)
- Blowdowns and Concentrates (streams 168, 169, 175 or 176).

Colony has proposed obtaining the river water from the Colorado River. While it does not contain any oils and greases, it does contain suspended matter. Sedimentation by gravity settling and clarification with addition of alum are the approaches proposed to reduce the suspended matter in the river water.

Table 5.2-2 presents the design features and cost data for clarification, and Figure 5.2-2 shows a cost curve for the clarifier. This activity could be considered as part of the process rather than pollution control.

TABLE 5.2-2. DESIGN AND COST OF RIVER WATER CLARIFICATION[a]

Item	Unit	Quantity
River Water Flow Rate	gpm	5,798-5,884
Flow Rate/Clarifier	gpm	1,460
Number of Clarifiers	--	4
Retention Time	hrs	2
Diameter	ft	50
Alum Rate (30 ppm)	ton/yr	350
Fixed Capital Cost	$\$10^3$	788
Direct Annual Operating Cost	$\$10^3$	
Maintenance @ 4%[b]		26
Alum @ 12¢/lb		84
TOTAL		110
Total Annual Control Cost[c]	$\$10^3$	308

[a] This technology could be considered as part of the process rather than pollution control.

[b] Maintenance is based on the fixed capital cost less contingency.

[c] See Section 6 for details on computation of the total annual control cost.

Source: WPA estimates.

In the TOSCO II retorting process, foul water is condensed along with naphtha and gas oils in the pyrolysis fractionator. It may also contain some particulate matter captured in the pyrolysis vapors, as well as some light oils. An API-type oil/water separator with channel covers was examined for this purpose. As stated earlier, the separators are not fully established as useful devices for shale oils, but difficulty in achieving separation from light oils is not anticipated. Table 5.2-3 and Figure 5.2-3 present the cost and design information and the cost curve, respectively, for the API separator.

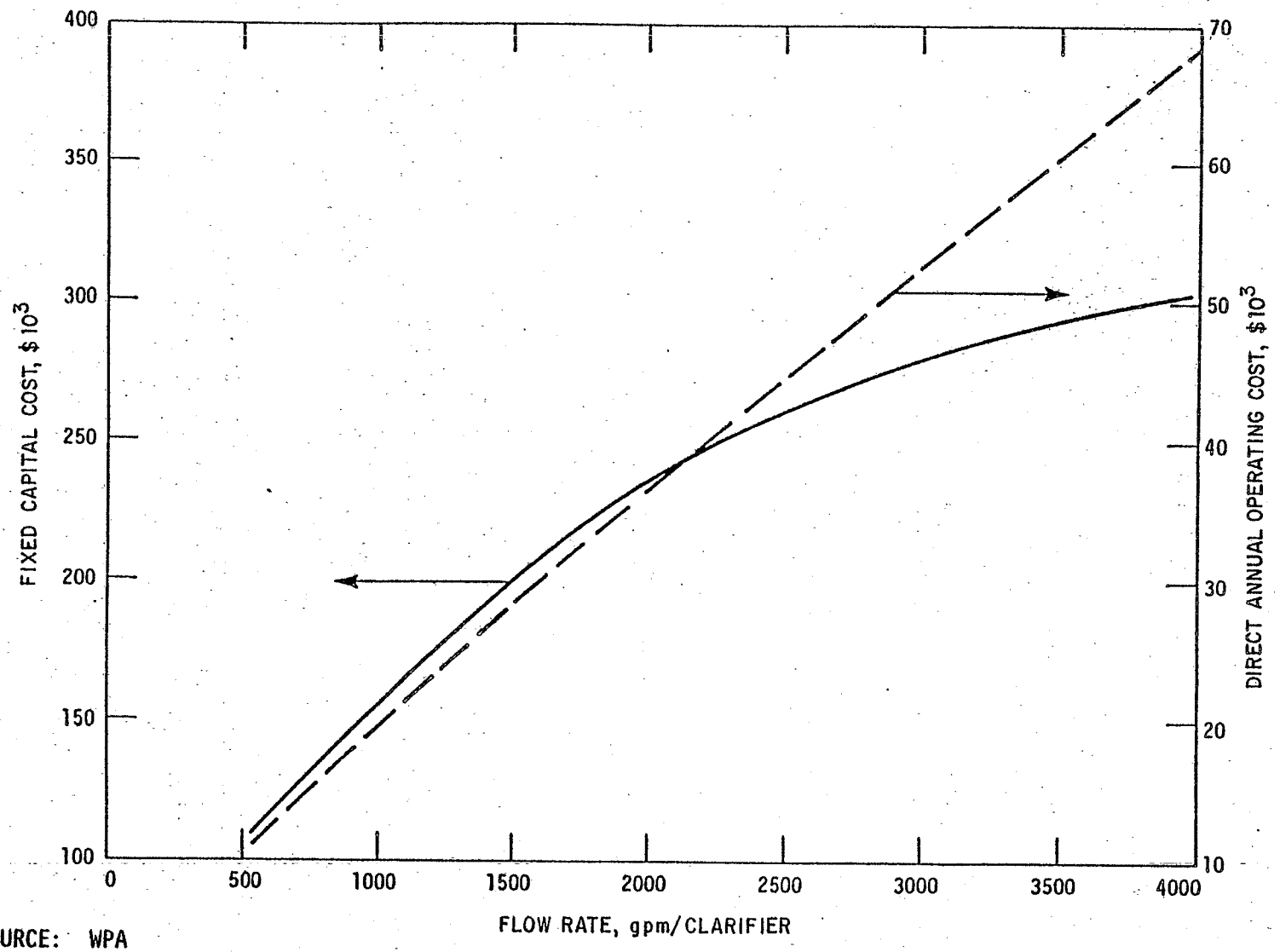

SOURCE: WPA

FIGURE 5.2-2 COST OF RIVER WATER CLARIFICATION

TABLE 5.2-3. DESIGN AND COST OF API OIL/WATER SEPARATOR FOR FOUL WATER

Item	Unit	Quantity
Foul Water Flow Rate	gpm 10^3 lb/hr	498 253
No. of Channels (1 standby)	--	2
Channel Cross Sectional Area	ft^2	24
Channel Depth	ft	3
Channel Width	ft	8
Channel Length (channel is covered)	ft	65
Fixed Capital Cost[a]	$\$10^3$	140
Direct Annual Operating Cost[a]	$\$10^3$	
Maintenance @ 3%[b]		3.4
Total Annual Control Cost[c]	$\$10^3$	31

[a] The fixed capital cost and direct annual operating cost for the standby channel are included.

[b] Maintenance is based on the fixed capital cost less contingency.

[c] See Section 6 for details on computation of the total annual control cost.

Source: WPA estimates based on information from American Petroleum Institute, 1969.

Service and fire water runoff, storm runoff, and leachate from shale piles may contain oily materials. Again, an API-type oil/water separator (without channel covers) was examined as the control. This will also allow separation of suspended matter along with the water. The cost and design data for this separator are given in Table 5.2-4, while a cost curve is already included in Figure 5.2-3.

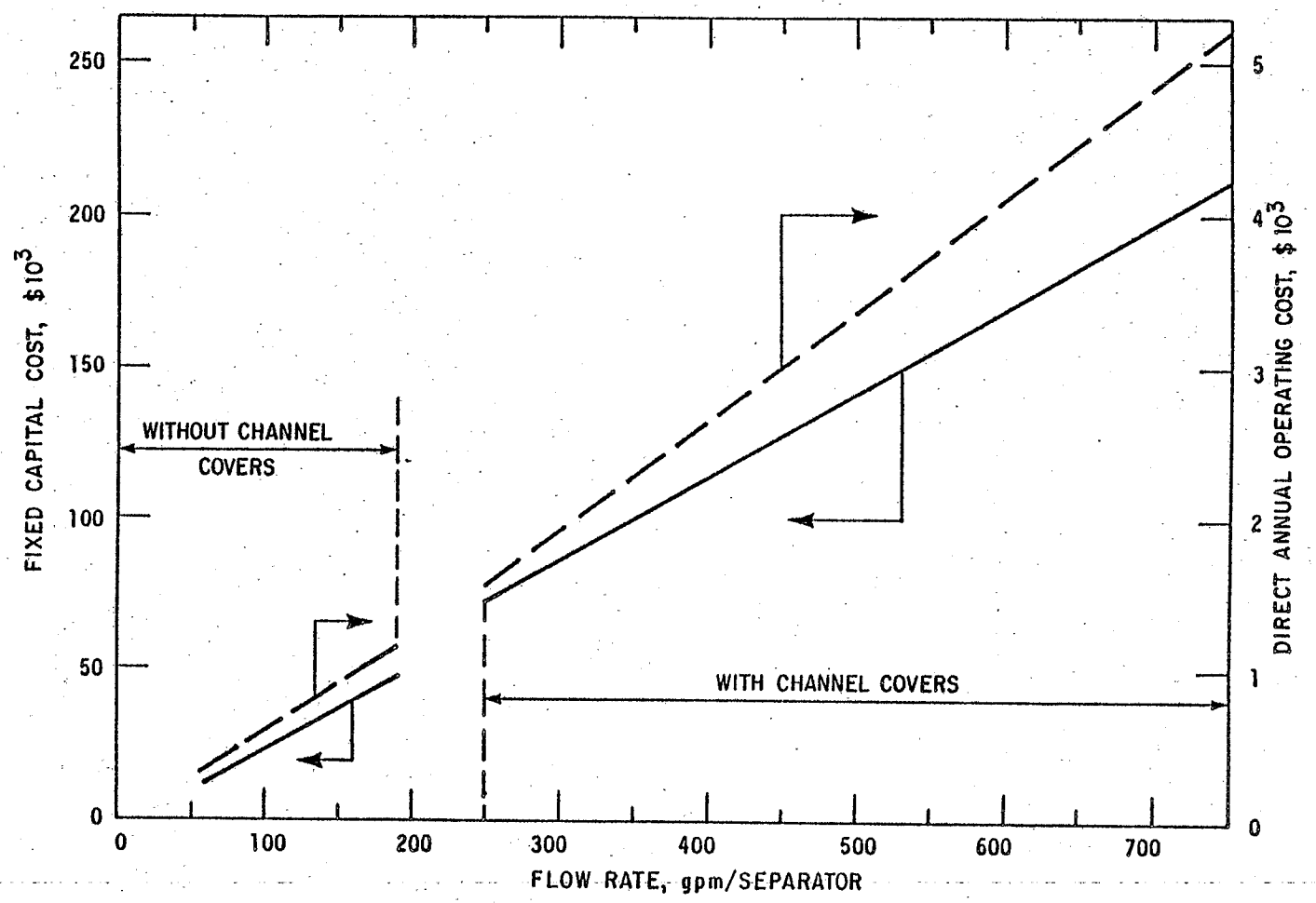

SOURCE: WPA

FIGURE 5.2-3 COST OF OIL/WATER SEPARATION

TABLE 5.2-4. DESIGN AND COST OF API OIL/WATER SEPARATOR FOR RUNOFFS AND LEACHATE

Item	Unit	Quantity
Runoff Flow Rate	gpm	126
No. of Channels (1 standby)	--	2
Channel Cross Sectional Area	ft^2	6
Channel Depth	ft	3
Channel Width	ft	2
Channel Length	ft	65
Fixed Capital Cost[a]	$\$10^3$	27.4
Direct Annual Operating Cost[a]	$\$10^3$	
Maintenance @ 3%[b]		0.7
Total Annual Control Cost[c]	$\$10^3$	8

[a] The fixed capital cost and direct annual operating cost for the standby channel are included.

[b] Maintenance is based on the fixed capital cost less contingency.

[c] See Section 6 for details on computation of the total annual control cost.

Source: WPA estimates based on information from American Petroleum Institute, 1969.

The blowdowns, sludges, and concentrates from various processing units will also contain suspended matter. These streams are collected in an equalization pond for possible use in processed shale moisturizing. Since gravity settlement affords separation of the suspended matter, the equalization pond also might be viewed as a pollution control. Its design and cost are presented in Table 5.2-5, and a cost curve is given in Figure 5.2-4.

5.2.2 Dissolved Gases and Volatiles

Dissolved gases include ammonia, carbon dioxide, and hydrogen sulfide, while volatile materials are low molecular weight organics. Methods for removing these substances from water are summarized in Figure 5.2-5. Steam stripping is the most likely process to be used and has been successfully demonstrated on a laboratory scale for some oil shale wastewaters (Hicks and Liang, January 1981).

TABLE 5.2-5. DESIGN AND COST OF EQUALIZATION POND

Item	Unit	Quantity
Flow Rate into Pond	gpm acre-ft/yr	2,600 3,770
Pond Area	acre	2.7
Pond Depth	ft	10
Liner Material	--	Bentonite
Fixed Capital Cost	$\$10^3$	150
Direct Annual Operating Cost	$\$10^3$	
Maintenance @ 2%[a]		2.4
Total Annual Control Cost[b]	$\$10^3$	40

[a] Maintenance is based on the fixed capital cost less contingency.

[b] See Section 6 for details on computation of the total annual control cost.

Source: WPA estimates.

Inventory of Control Technologies--

Table 5.2-6 presents an inventory of applicable control technologies, along with their key features, for the dissolved volatiles. Basically, most technologies involve stripping of the dissolved gases by either elevating the temperature, applying vacuum, or displacement with carrier gases. More specific removal can be accomplished by using an adsorbent selective for the gas in question.

Steam stripping. Steam stripping of sour waters (e.g., waters containing dissolved ammonia and hydrogen sulfide) and coke-oven liquors (e.g., waters containing dissolved ammonia and carbon dioxide) is standard practice in the petroleum and steel industries. Stripping has also been used as part of the "Phenosolvan" process on coal gasification process condensates (American Petroleum Institute, March 1978; Beychok, 1967).

The dissolved gases are stripped from the solution by bubbling steam through it, generally in packed or tray columns. The steam may be directly sparged (live) or used indirectly in a reboiler, as in distillation columns. The stripped gases, along with other volatile materials, are removed in a relatively concentrated gas stream which may be treated for adsorption/

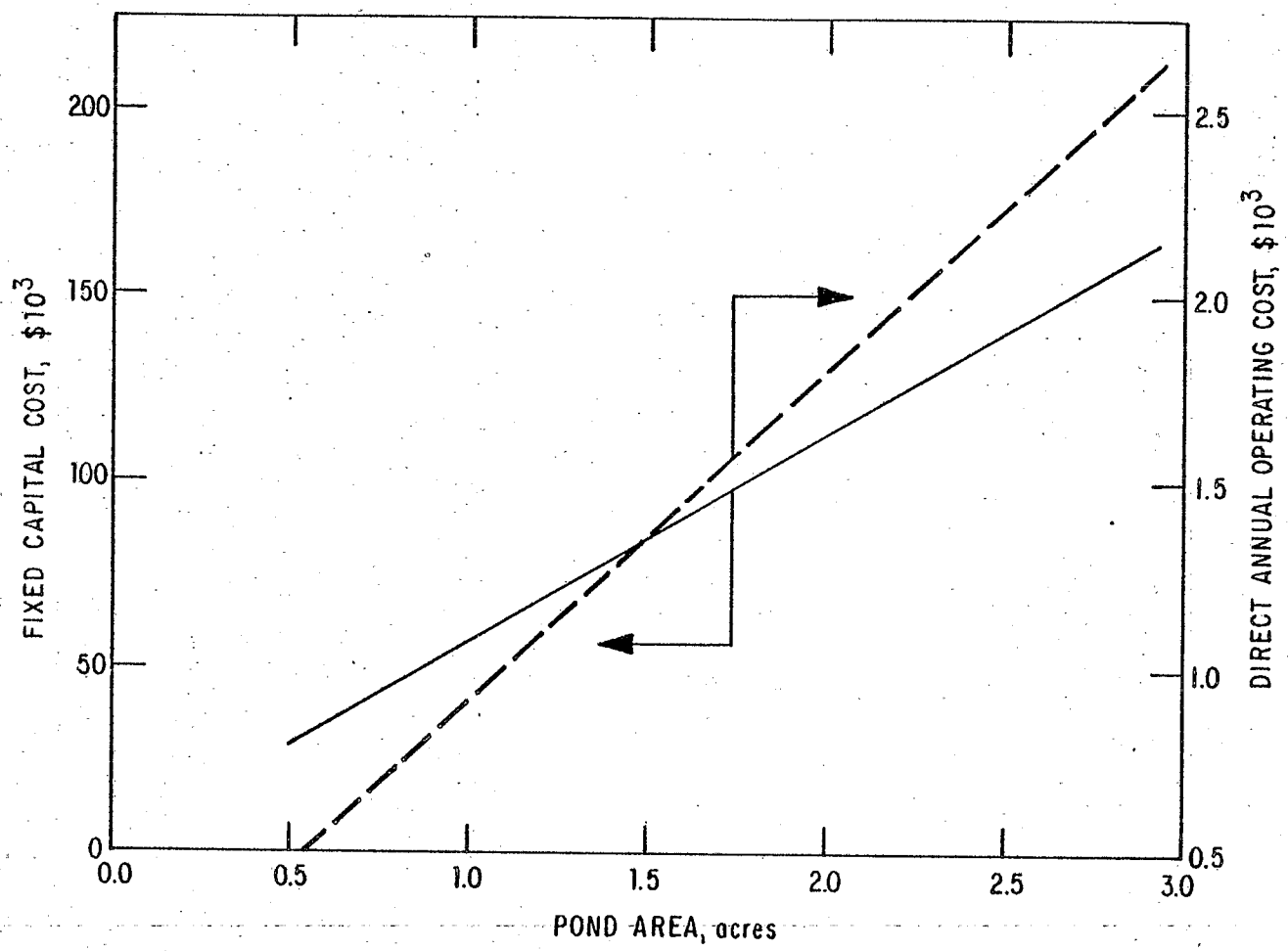

SOURCE: WPA

FIGURE 5.2-4 COST OF EQUALIZATION POND

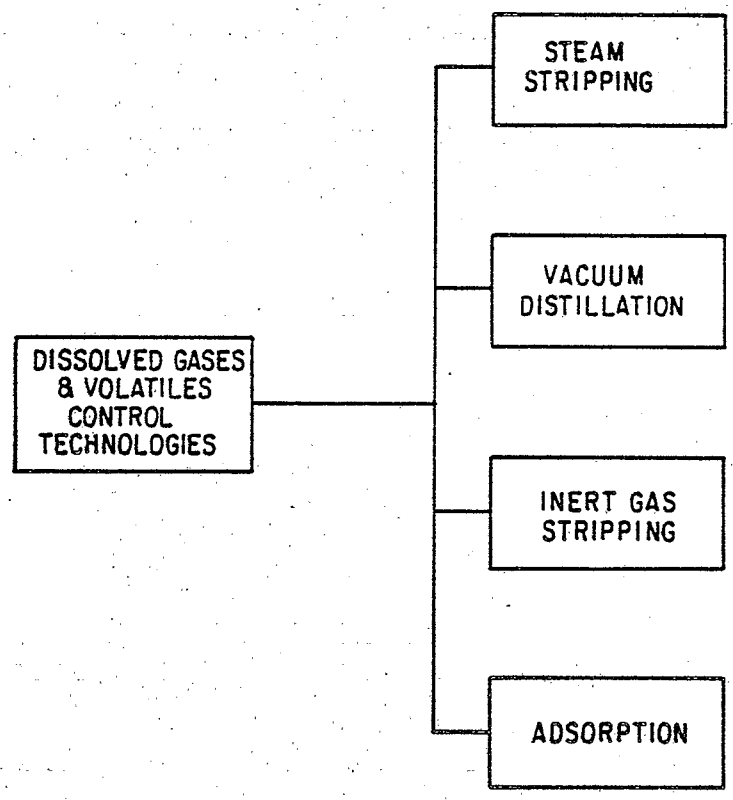

SOURCE: WPA

FIGURE 5.2-5 DISSOLVED GASES AND VOLATILES CONTROL TECHNOLOGIES

TABLE 5.2-6. KEY FEATURES OF CONTROL TECHNOLOGIES FOR DISSOLVED GASES AND VOLATILES

Control Technology	Operating Principle	Components Removed	Removal Efficiency	Feed Requirements/ Restrictions	By-products and Wastes	Comments
Steam Stripping	Increasing temperature and providing a positive flow of steam through the wastewater. Removes volatile organics and inorganics with overhead steam.	NH_3, acid gases (CO_2, H_2S, HCN), light hydrocarbons.	90+% of "free" ammonia and acid gases typical. Hydrocarbon removal varies with volatility of stripped components.	Acid/caustic for pH adjustment optional.	Stripped gases, uncondensed steam.	Acid/caustic addition can be used to improve the efficiency and selectivity of the stripping process.
Vacuum Distillation	Low pressure, low temperature stripping process.	As above.	As above.	As above.	Stripped gases.	High energy requirements. Not cost competitive in a plant where stripping steam is readily available.
Inert Gas Stripping	Same as stream stripping, but using air, nitrogen, or other available inert gas in place of steam.	As above.	As above.	As above.	Stripped and inert gases.	Normally used at ambient temperature; most suitable for low concentration wastes.
Adsorption	Adsorption of NH_3 onto clinoptilolite and volatile organics onto polymeric resins.	NH_3, volatile organics.	High removal efficiencies possible.	Not suitable for high concentrations.	Regenerant and adsorbent wastes.	Generally used as a polishing step.

Source: WPA.

recovery of a specific substance or incinerated. Carbon dioxide is readily stripped at efficiencies of +99%; ammonia strips less easily, and pH elevation may be required in some cases for 99% removal. Hydrogen sulfide does not strip as easily as carbon dioxide but can generally be removed down to the 10-20 ppm range. Costs are for equipment and steam and are proportional to the volume of water to be treated.

Steam requirements range from approximately 10 to 15 lbs steam per 100 lbs water treated. For a given separation, a greater column height is required for a lower steam rate. The selection of steam rate and column height is based on energy and equipment costs.

The stripped gases may be incinerated or treated further to recover ammonia and sulfur. Ammonia may be recovered as anhydrous ammonia, aqua (20-30%) ammonia or ammonium sulfate. In cases where the sulfate is derived from flue gas desulfurization, the sulfate route may be viable depending, in part, on the marketability of ammonium sulfate and on the costs of alternative flue gas desulfurization processes. Because oil shale plants generally will have ammonia available as a by-product, SO_2 scrubbing with NH_3 may be attractive when the technology is sufficiently developed and tested. Recovery of anhydrous ammonia involves considerable capital and energy (steam) requirements, but these are partially offset with by-product ammonia sales. The stability of the ammonia market must be considered when selecting a recovery process.

Vacuum distillation. Distillation at reduced pressure has many industrial applications, but these primarily involve distillation or fractionation of compounds with high boiling points or low thermal stability. The method may be applicable to stripping of gases and volatile compounds, but the energy requirements are high relative to those for steam or inert gas stripping.

Inert gas stripping. This method is applicable to dilute, or low strength, wastewaters for which steam stripping may not be practical. The operating principle is similar to that for steam stripping, except air, nitrogen, carbon dioxide, or other inert gases may be used. Its application to high strength liquids is generally not practical because large column heights and gas compression costs are required.

Adsorption. Dissolved gases and volatile components may be adsorbed on specific surface-active materials by passing wastewaters through a bed of the adsorbent. The gases may then be desorbed thermally, and the regenerated adsorbent is recycled. This method is generally used in trace removal applications.

Control Technologies Analyzed--

The streams that require removal of dissolved gases and volatiles are:

- Foul Waters (streams 29, 30, 99)
- Sour Water (streams 110, 124).

The foul waters are previously freed from the separated oil and emulsion in the oil/water separator, but some polar organics (e.g., phenols, fatty acids) remain dissolved. A portion of the dissolved organics can be steam stripped along with other dissolved gases. The foul waters also contain free ammonia, hydrogen sulfide and carbon dioxide. Steam stripping removes these dissolved gases and most of the volatile organic matter. A further control of the released ammonia is also desirable and this may be accomplished with an ammonia recovery unit. Design parameters and cost information for steam stripping are given in Table 5.2-7, and a cost curve based on this specific design is presented in Figure 5.2-6. The description and material balance for the stripper are presented in Sections 3.3.3 and 4.2.7, respectively.

Steam stripping and ammonia recovery were examined as controls for the sour waters. The design specifications for the ammonia recovery unit for all case studies are given in Table 5.2-8, while the costs are presented in Table 5.2-9. Figure 5.2-7 presents a cost curve for the ammonia recovery unit specifically designed for treating the TOSCO II sour waters. The process description for the unit is given in Section 3.3.11 and a material balance for the process is included in Section 4.2.7.

5.2.3 Dissolved Inorganics

Dissolved inorganics are usually not a problem unless the compounds are judged to be hazardous (e.g., trace metals) or when fouling of equipment (e.g., boilers) occurs because of the high salt content of the waters being used. Natural waters and waters that come into contact with the solids may need to be treated if they are intended for critical uses in the plant. Processed shale moisturizing, on the other hand, may not require control of dissolved inorganics. In fact, waters with high salt content can be used for this purpose, thereby avoiding the need for other controls. Since gas condensates do not contain significant amounts of dissolved inorganics, a treatment may not be necessary.

Inventory of Control Technologies--

Methods for removal of dissolved inorganics are shown in Figure 5.2-8, while some of the key features of the technologies are presented in Table 5.2-10. The operating principles for some of the methods shown in the figure are detailed below.

Precipitation. Chemicals may be added to precipitate salts, e.g., lime addition for carbonate (hardness) removal. Processed shale is also believed to behave like a softener for inorganic carbon reduction (Humenick, 1977). The process is simple, but it will usually require the use of other methods (e.g., gravity separation, centrifugation, filtration) to remove the precipitate.

Ion exchange. Cations and anions in solution are replaced with hydrogen and hydroxyl ions on exchange resins capable of producing a water virtually free of common salts. The resins are regenerated with relatively strong acid and alkali solutions, and the regenerant wastes must be controlled. Costs go

TABLE 5.2-7. DESIGN AND COST OF FOUL WATER STRIPPER

Design Parameter	Unit	Quantity
Foul Water Feed Rate	gpm	498
Steam Rate	10^3 lb/hr	32.5
Cooling Water Circulated	gpm	1,500
Stripping Column		
Number	--	1
Diameter	ft	6.5
Height	ft	60
Material	--	CS/SS
Reboiler		
Number	--	1
Surface area	ft^2	1,880
Material	--	CS/SS
Partial Condenser		
Number	--	1
Surface area	ft^2	1,670
Material	--	CS/SS
Feed Heat Exchanger		
Number	--	3
Surface area (each)	ft^2	4,000
Material	--	CS
Fixed Capital Cost	$\$10^3$	
Stripping column		492
Heat exchangers		638
TOTAL		1,130
Direct Annual Operating Cost	$\$10^3$	
Maintenance @ 4%[a]		37
Labor, 12 hr/day @ $30/hr		118
Steam @ $3/MMBtu		704
Cooling water @ 3¢/m^3 circulated		81
TOTAL		940
Total Annual Control Cost[b]	$\$10^3$	1,176

[a] Maintenance is based on the fixed capital cost less contingency.

[b] See Section 6 for details on computation of the total annual control cost.

Source: WPA estimates based on information from Peters and Timmerhaus, 1980.

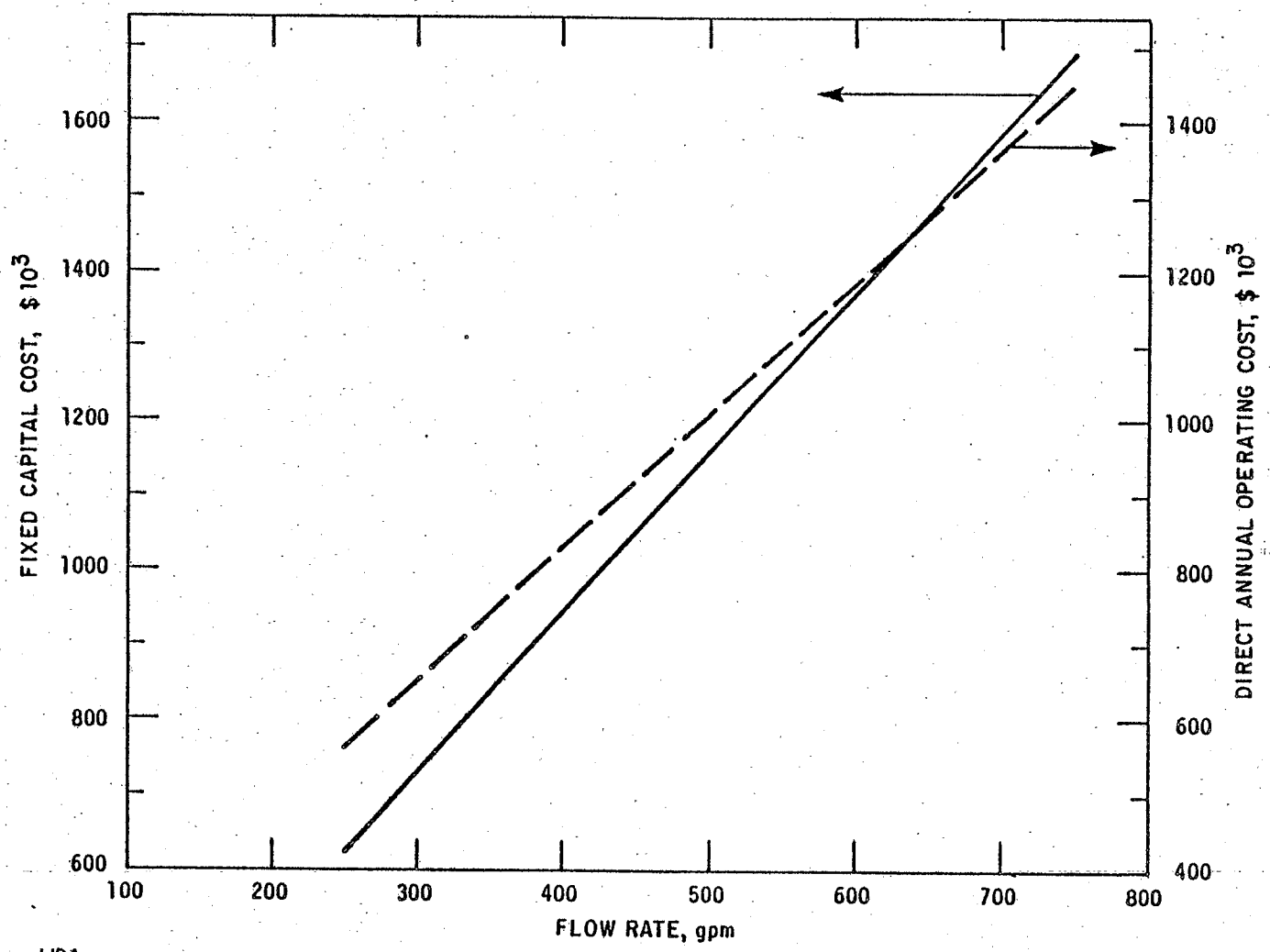

SOURCE: WPA

FIGURE 5.2-6 COST OF FOUL WATER STEAM STRIPPING

TABLE 5.2-8. DESIGN OF AMMONIA RECOVERY SYSTEM*

Design Parameter	Unit	Quantity
Sour Water Feed Rate	gpm	510
Ammonia Rate	lb/hr	11,208
Steam Rate	10^3 lb/hr	156
Cooling Water Circulated	gpm	6,900
Electricity	kW	300
Chemicals		
H_3PO_4	lb/hr	19
NaOH	lb/hr	120
Steam Stripping Column		
Number	--	1
Diameter	ft	6.0
Height	ft	95
Material	--	CS/SS
Reboilers on Steam Stripping Column		
Number	--	1
Surface area	ft^2	1,400
Material	--	CS/SS
Phosam Absorber		
Number	--	1
Diameter	ft	5
Height	ft	50
Material	--	SS
Reboiler on Phosam Absorber		
Number	--	1
Surface area	ft^2	4,175
Material	--	CS/SS
Cooler on Phosam Absorber		
Number	--	1
Surface area	ft^2	5,640
Material	--	CS/SS
Phosam Stripper		
Number	--	1
Diameter	ft	8
Height	ft	60
Material	--	SS

(Continued)

TABLE 5.2-8 (cont.)

Design Parameter	Unit	Quantity
Condenser on Phosam Stripper		
Number	--	2
Surface area (each)	ft^2	3,380
Material	--	SS
Ammonia Fractionator		
Number	--	1
Diameter	ft	3.8
Height	ft	64
Material	--	SS
Fractionator Feed Tank		
Number	--	1
Diameter	ft	7
Height	ft	26
Capacity	gal	7,250
Material	--	SS
Reboiler on Fractionator		
Number	--	1
Surface area	ft^2	1,240
Material	--	CS/SS
Condenser on Fractionator		
Number	--	1
Surface area	ft^2	3,835
Material	--	CS/SS
Flash Drum		
Number	--	1
Diameter	ft	4
Height	ft	9
Capacity	gal	820
Material	--	SS
Lean Solution Cooler		
Number	--	2
Surface area (each)	ft^2	4,625
Material	--	CS/SS
Solution Exchanger		
Number	--	1
Surface area	ft^2	1,810
Material	--	SS

* This table is based on the Phosam-W process, which is only one example of many available processes for the recovery of ammonia.

Source: WPA estimates based on information provided by U.S.S. Engineers and Consultants, Inc., April 1978.

TABLE 5.2-9. COST OF AMMONIA RECOVERY

Item	Unit	Quantities	
		Example I[a]	Example II[a]
Fixed Capital Cost	$\$10^3$		
Towers		1,945	2,035
Heat exchangers		2,614	2,729
Drums, etc.		100	105
TOTAL		4,659	4,869
Direct Annual Operating Cost	$\$10^3$		
Maintenance @ 4%[b]		152	158
Labor, 24 hr/day @ $30/hr		237	237
Steam @ $3/MMBtu		2,653	2,834
Cooling water @ 3¢/m^3 circulated		345	369
Electricity @ 3¢/kW-hr		71	76
Chemicals			
NaOH (475 tons/yr @ $350/ton)		166	180
H_3PO_4 (75 tons/yr @ $474/ton)		35	38
TOTAL		3,659	3,892
Credit for Ammonia Sales @ $110/ton	$\$10^3$/yr	4,878	5,203
Credit for Low Pressure Steam Return	$3/MMBtu	183	229
Total Annual Control Cost[c]	$\$10^3$	(122)[d]	--[e]

[a] In Example I, the foul water stripper overheads are not fed to the ammonia recovery unit. Example II reflects recovery of additional ammonia from the foul water stripper overhead.

[b] Maintenance is based on the fixed capital cost less contingency.

[c] See Section 6 for details on computation of the total annual control cost.

[d] Value in parentheses ( ) indicates that the annual by-product credit is higher than the total annual control cost.

[e] Example II is not part of the case studies; therefore, the total annual control cost was not determined for it.

Source: WPA estimates based on information provided by U.S.S. Engineers and Consultants, Inc., April 1978.

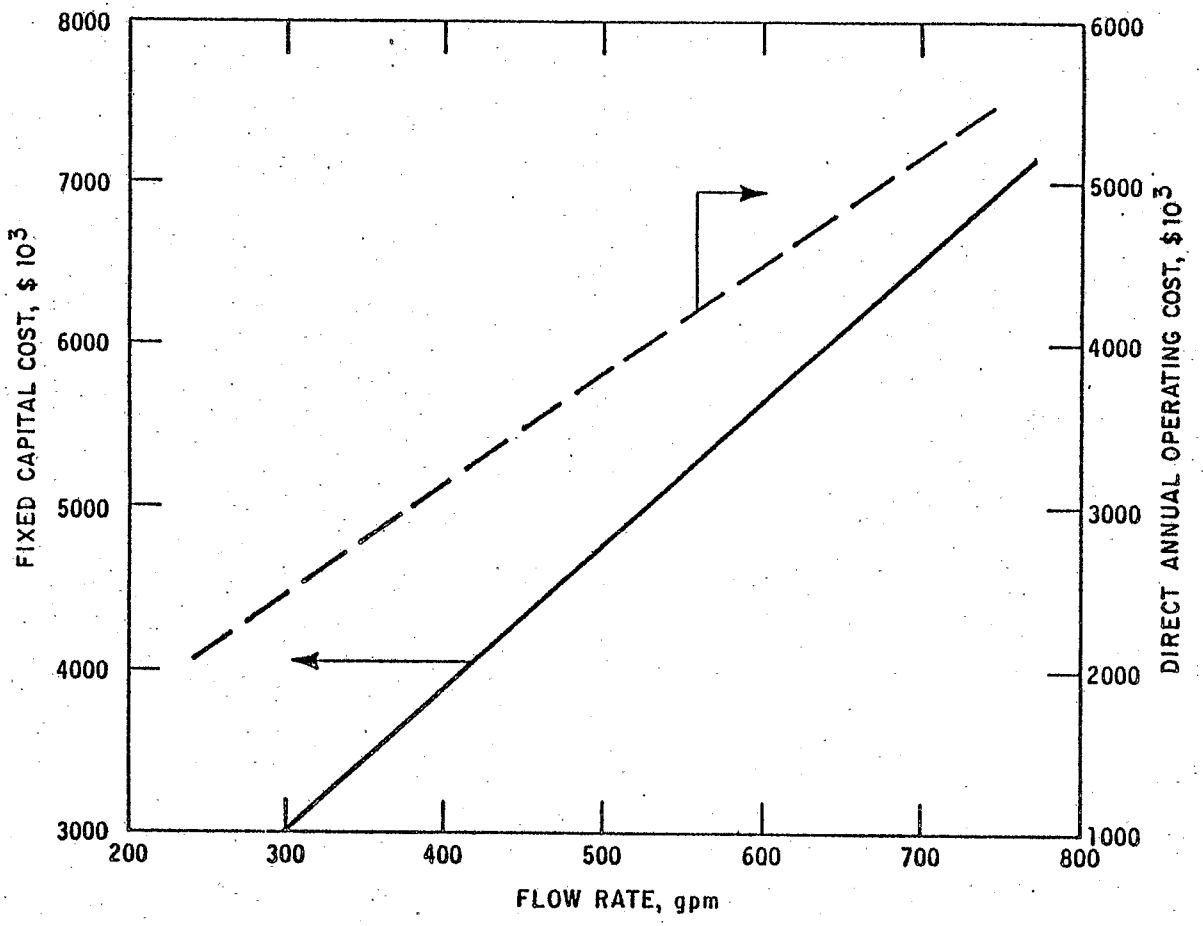

SOURCE: WPA

FIGURE 5.2-7 COST OF AMMONIA RECOVERY WITH PHOSAM-W PROCESS

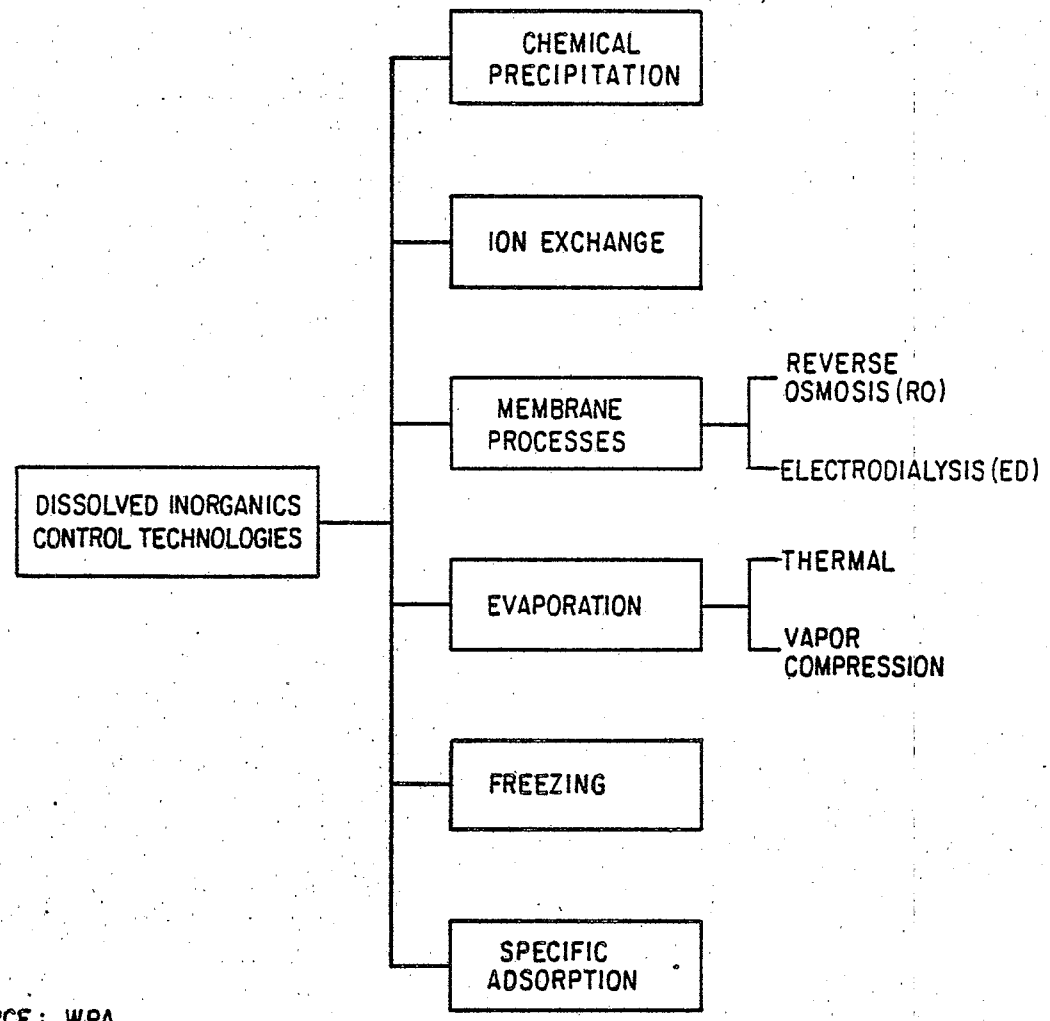

SOURCE: WPA

FIGURE 5.2-8 DISSOLVED INORGANICS CONTROL TECHNOLOGIES

TABLE 5.2-10. KEY FEATURES OF CONTROL TECHNOLOGIES FOR DISSOLVED INORGANICS

Control Technology	Operating Principle	Components Removed	Removal Efficiency	Feed Requirements/ Restrictions	By-products and Wastes	Comments
Chemical Precipitation	Use of agents to promote the precipitation of inorganic solids from wastewaters.	Ca, Mg, heavy metals, alkalinity.	Variable, depending on constituents.	Lime, polymer, and soda ash may be required.	Sludge contaminated with heavy metals.	Generally followed by filtration and/or activated carbon adsorption.
Ion Exchange	Substitution of H^+ and OH^- ions for objectionable ionic species. Exchange resins regenerated with acid base or salt solutions.	Heavy metals, F^-, CN^-, scaling species.	90+% for most ions. Regeneration frequency is a key parameter.	Regenerants, replacement resins.	Spent regenerants and resins.	Most effective as a polishing process. Clearly applicable to boiler feedwater treatment needs; of limited use in treating process wastewaters containing high concentrations of organics or dissolved solids.
Membrane Processes (RO, ED)	Separation of dissolved matter by a semipermeable membrane under a pressure (RO) or electric (ED) gradient.	Ionized salts.	90-99% removal of dissolved salts.	Filtration, pH adjustment, foulant control.	Concentrate, spent membranes.	RO and ED have been used commercially for desalination. Concentrate stream may be 10-30% of input stream.
Evaporation (Thermal, Vapor Compression)	Application of heat (solar, steam, etc.) to evaporate wastewater or concentrate streams.	All nonvolatile species will remain in brine.	99+% rejection of nonvolatile dissolved solids.	Fouling/scaling of heat exchange surfaces must be prevented.	Recovered condensate, noncondensible gases, waste brine.	Solar evaporation may be unacceptable due to air pollution. Vapor compression evaporation has been successfully tested on retort waters.
Freezing	Cooling with formation of ice which is separated from remaining brine.	Dissolved salts, including organics.	90+% possible.		Concentrate stream.	Not yet demonstrated commercially.
Specific Adsorption	Adsorption of specific ions onto resins or other adsorbent.	Boron, fluoride, trace metals.	90+% in properly designed systems.	As above.	As above.	Useful as a polishing process.

Source: WPA.

up with increasing concentration of salts in the water. Ion exchange is normally used only where a very clean water is required from a relatively clean or mildly brackish supply. The organics present are not removed and may foul the exchange resins (Calmon and Gold, 1979).

Reverse osmosis (RO). Sometimes called "hyperfiltration," RO is a process for recovering relatively pure water from solutions. Water is passed through a hyperfilter, or semipermeable membrane, which rejects dissolved materials. As in normal filtration, the driving force is hydrostatic pressure, but in this case, the pressure has to be greater than the osmotic pressure of the solution. Osmotic pressures are related to the total molar concentration of the solution and its temperature (Hicks and Liang, January 1981).

The water is passed under pressure (greater than 200 psi) through a membrane which is impermeable to most inorganic salts and many organics. These "rejected" substances remain in a concentrate stream which may be 10-20% of the feedwater volume. The treated water or permeate will generally contain less than 10%, and often less than 1%, of the rejected substances. Costs scale primarily with the volume of water to be treated but are also dependent on concentration. At very high solute concentrations (e.g., seawater), costs increase rapidly due to the high applied pressures that are required. The flux of water through the membrane, i.e., the permeate recovery rate, increases linearly with the pressure by which the applied pressure exceeds the osmotic pressure. Fluxes of 10 gal/ft^2/day have been measured for retort water at an applied pressure of 600 psi. Typical applied pressures for brackish waters range from 200 to 600 psi and greater.

Membranes consist essentially of a thin skin (0.1 to 0.25 μm) of active chemical (cellulose acetate, polyamide) on a porous substructure, which may then be housed in a spiral-wound module for commercial application. Other geometries are also available. Rejection of strong electrolytes is normally in excess of 90% and can exceed 99 percent. Nearly complete rejection is obtained from most species with molecular weights greater than about 150. However, low molecular weight nonelectrolytes (e.g., small organic molecules like urea, and weak acids such as boric acid) are poorly rejected. Rejections of these substances can sometimes be improved by adjusting the solution pH to a value where the compound dissociates (e.g., boron is rejected above pH = 10).

Some advantages of RO treatment are the low labor and space requirements and the high rejection rates obtained for a wide range of dissolved contaminants. Of particular relevance to oil shale retort water is that both organic and inorganic compounds can be simultaneously removed under favorable pH conditions and that such a system can accommodate changing water flow rates. A serious disadvantage of the process is that the membranes are susceptible to blockage by deposition of solids. This so-called fouling results from solids present in the feed solution or from precipitation of solids as the concentration in the brine exceeds the solubility limit; it may even result from biological activity on the membrane surface.

Fouling rates may be reduced by proper pretreatment and by reducing the concentration increase in the brine. Reverse osmosis does not destroy the pollutants, it merely concentrates them into a smaller liquid stream. Reducing the concentration increase implies reducing the product recovery and increasing the amount of brine for disposal. Fouling can be further controlled by periodic washing, although there is generally a certain amount of irreversible fouling that determines membrane life and operating costs.

Costs scale proportionately with the volume of product water recovered, but they are also dependent on the degree of recovery and membrane fouling characteristics. As the concentration of pollutants in wastewater increases, so does the osmotic pressure; hence, higher applied pressures are required to maintain the desired permeate flux. Energy costs, however, are normally small relative to membrane costs.

Electrodialysis (ED). Electrodialysis is the use of an electromotive force to transport ionized materials in a solution through a diaphragm, or membrane. The process can be made selective by using ion-specific membranes which allow passage of only certain ions. A common application of electrodialysis is in the desalting of brackish waters containing 1,000-5,000 ppm of salts. A removal efficiency of 90-99% is usually achievable.

Thermal evaporation. This approach includes processes in which heat is applied to vaporize water, leaving a concentrated solution or slurry for disposal. The high energy required for evaporation is recovered in most processes by condensing the water vapor and, as a result, producing a stream of relatively pure water. Volatile contaminants, if present, may require removal in an upstream stripping process in cases where a clean product water is necessary. Multiple effect boiling (MEB) and multistage flash (MSF) are two procedures commonly used for evaporation (Water Purification Associates, December 1975).

Disadvantages of thermal processes are that volatile substances are not controlled, and (energy) costs are generally higher than for processes not involving a phase change. Problems related to scaling of heat transfer surfaces and corrosion are also encountered. These problems may be accentuated with waters containing high organic loadings, such as oil shale wastewater. Thermal processes may find application if there is a need for dirty steam, as occurs in many in situ processes.

Vapor compression evaporation. This is a method for evaporating water by the use of mechanical energy. Thermal energy required for evaporation is obtained by mechanical compression of the vapor instead of by heating. The wastewater is boiled in an evaporator to produce a vapor which is compressed in order to raise its temperature, and then it is passed through the tubes in the evaporator where the necessary heat exchange between the vapor and wastewater takes place. The vapor cools and condenses upon heat exchange and a relatively pure water is produced.

The advantage of vapor compression is that the heat required for vapor formation is recirculated so that the amount that must be dissipated is much less than the latent heat of vaporization. This approach results in

relatively low energy requirements and essentially negligible cooling water requirements. The penalties are the high capital costs associated with the compressor, which must handle the large volumes of vapor, and increased maintenance costs. Other disadvantages of vapor compression evaporation are similar to those of the thermal processes.

The energy required for the single effect vapor compression units is about 70-90 kW-hr per thousand gallons of product water. Some single effect vapor compression units (RCC evaporator) can recover up to 98% of the wastewater containing up to 11,000 mg/l total dissolved solids.

Freezing. The water is reduced in temperature to produce a solid (ice) phase and a concentrated brine. The ice is washed free of salts and then melted to produce a virtually pure water. Both inorganics and organics are removed in the brine stream. Since the costs scale with the volume of water to be treated, freezing would normally be applied to relatively concentrated low volume wastes. While this process is theoretically more efficient than evaporation, it has yet to be applied commercially. It is included in this inventory as it may be useful for controlling retort waters, provided operating problems can be resolved in the future (Barduhn, September 1967; Water Purification Associates, December 1975).

Specific adsorption. The processes in this category are similar to the ion exchange processes, except that the affinity between the sorbent materials and the solutes being removed is of a physical nature. The sorbents may be natural or synthetic and usually have pores, or lattice vacancies, of uniform size and dimensions which are specific for the solutes. The processes are not applicable to high strength wastewaters and are generally used for trace removal applications.

Control Technologies Analyzed--

The following streams may require control of dissolved inorganics:

- Boiler Feedwater (streams 153, 154, 155, 156, 157)
- Cooling Water (streams 141, 142, 143, 144, 145, 146).

Softening was examined as the most economical treatment of the river water makeup to prevent scaling in the boilers. In this process, calcium and magnesium ions are replaced by sodium ions using a zeolite ion exchange resin. Total dissolved solids and silica are not removed by softening, and a relatively large boiler blowdown is required to maintain acceptable concentration levels in the boilers. The boiler blowdown is used for processed shale moistening. The blowdown does represent an energy loss from the boiler system, and some heat recovery from this stream might prove cost effective. The zeolite softener is regenerated with a saline solution prepared from salt and clarified river water. The waste regenerant, containing mainly calcium chloride, is disposed of on the processed shale after equalization with other blowdowns. Table 5.2-11 gives the basis for design and costs of boiler feedwater treatment, while a cost curve for the zeolite system is presented

in Figure 5.2-9. The boiler feedwater treatment could be considered as part of the process rather than pollution control.

TABLE 5.2-11. DESIGN AND COST OF BOILER FEEDWATER TREATMENT[a]

Item	Unit	Quantity
Boiler Blowdown (20% of softened river water makeup)	gpm	280
Steam Consumption and Losses	gpm	1,120
TOTAL MAKEUP (clarified river water)	gpm	1,400
Fixed Capital Cost (includes one spare train)	$\$10^3$	
Resin: 940 ft^3 @ $\$50/ft^3$		47
Installed equipment		361
Contingency and contractor fee		83
TOTAL		491
Direct Annual Operating Cost	$\$10^3$	
Maintenance @ 4%[b]		14
Labor, 2 hr/regeneration @ $30/hr		66
Chemicals		
Resin replacement @ 3% per year		2
Salt @ $45/ton		290
TOTAL		372
Total Annual Control Cost[c]	$\$10^3$	474

[a] This technology could be considered as part of the process rather than pollution control.

[b] Maintenance is based on the fixed capital cost less contingency.

[c] See Section 6 for details on computation of the total annual control cost.

Source: WPA estimates based on information from Peters and Timmerhaus, 1980.

Clarified river water is used as cooling tower makeup. As a treatment, some sulfuric acid is added to convert calcium carbonate to the more soluble calcium sulfate. The cooling tower is operated at two cycles of concentration, which means that the concentration of dissolved species in the blowdown is twice that in the makeup. Since this concentration is not excessive, the

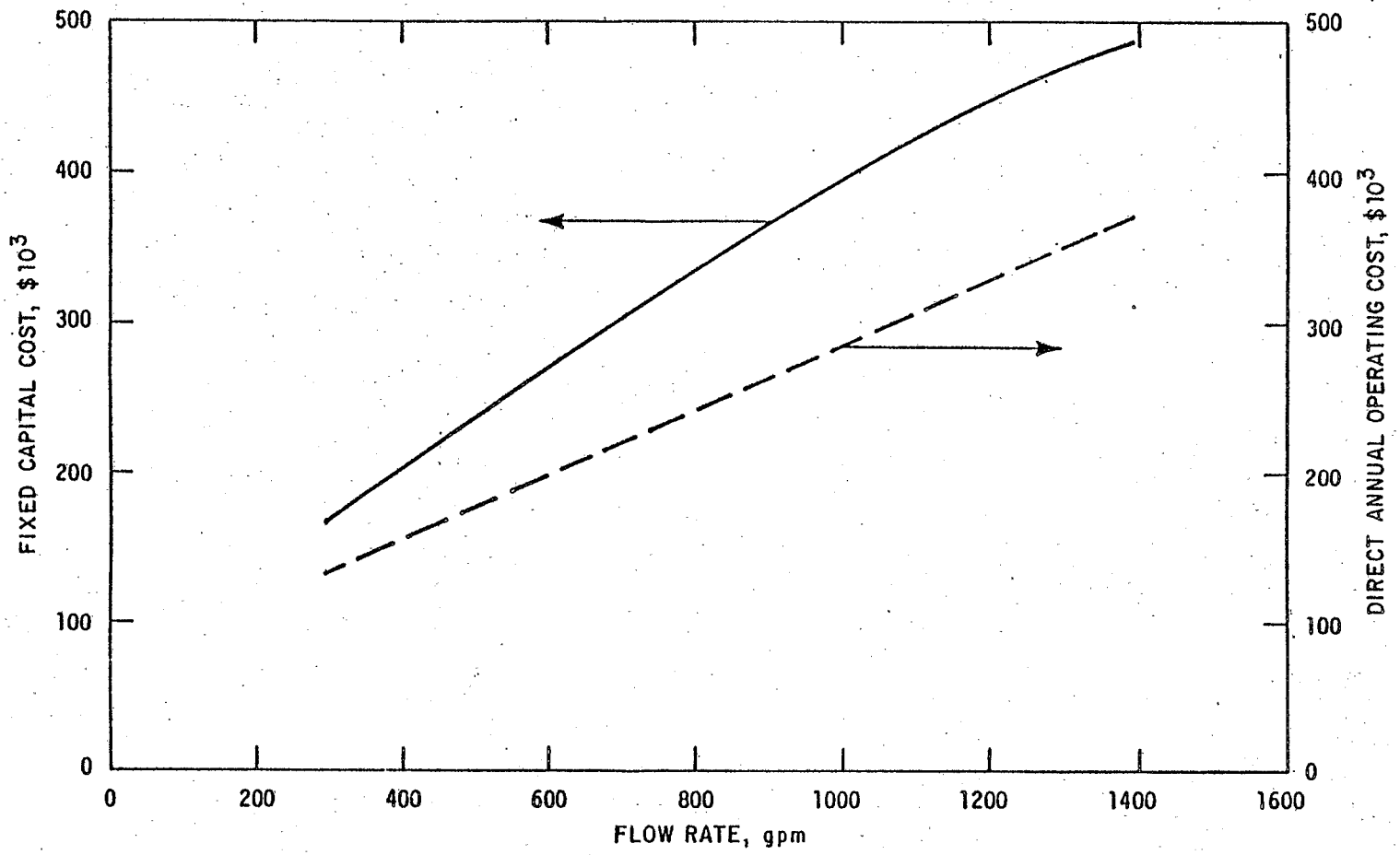

SOURCE: WPA

FIGURE 5.2-9 COST OF BOILER FEEDWATER TREATMENT WITH ZEOLITE RESIN

cooling tower blowdown may be used for processed shale moisturizing. Table 5.2-12 contains design and cost information for the cooling tower makeup treatment, and a cost curve for the treatment is shown in Figure 5.2-10. This technology could be considered as part of the process rather than pollution control.

TABLE 5.2-12. DESIGN AND COST OF COOLING WATER TREATMENT[a]

Item	Unit	Case Studies A, B	Case Studies C
Evaporation and Drift Losses	gpm	1,530	1,646
Blowdown	gpm	1,530	1,646
TOTAL MAKEUP (clarified river water)	gpm	3,060	3,292
Cycles of Concentration	--	2	2
Sulfuric Acid Addition	mg/l (ppm)	71	71
	ton/yr	428	461
Direct Annual Operating Cost	$10^3		
Sulfuric acid @ $65/ton		28	30
Total Annual Control Cost[b]		29	31

[a] This technology could be considered as part of the process rather than pollution control.

[b] See Section 6 for details on computation of the total annual control cost.

Source: WPA estimates based on information from Peters and Timmerhaus, 1980.

Other Control Technologies Analyzed--

One additional dissolved inorganics control technology--a solar evaporation pond--was evaluated as a post-treatment for the process waters. A solar pond is simply a lined pond with enough surface area to provide an evaporation rate that is higher than the rate of inflow. The precipitated sludge can be removed periodically and disposed of in a proper manner. This technology has not been proposed by Colony; however, it was analyzed as a viable option in the event that the process waters are reused in the plant and the resulting wastes are disposed of separately from the processed shale.

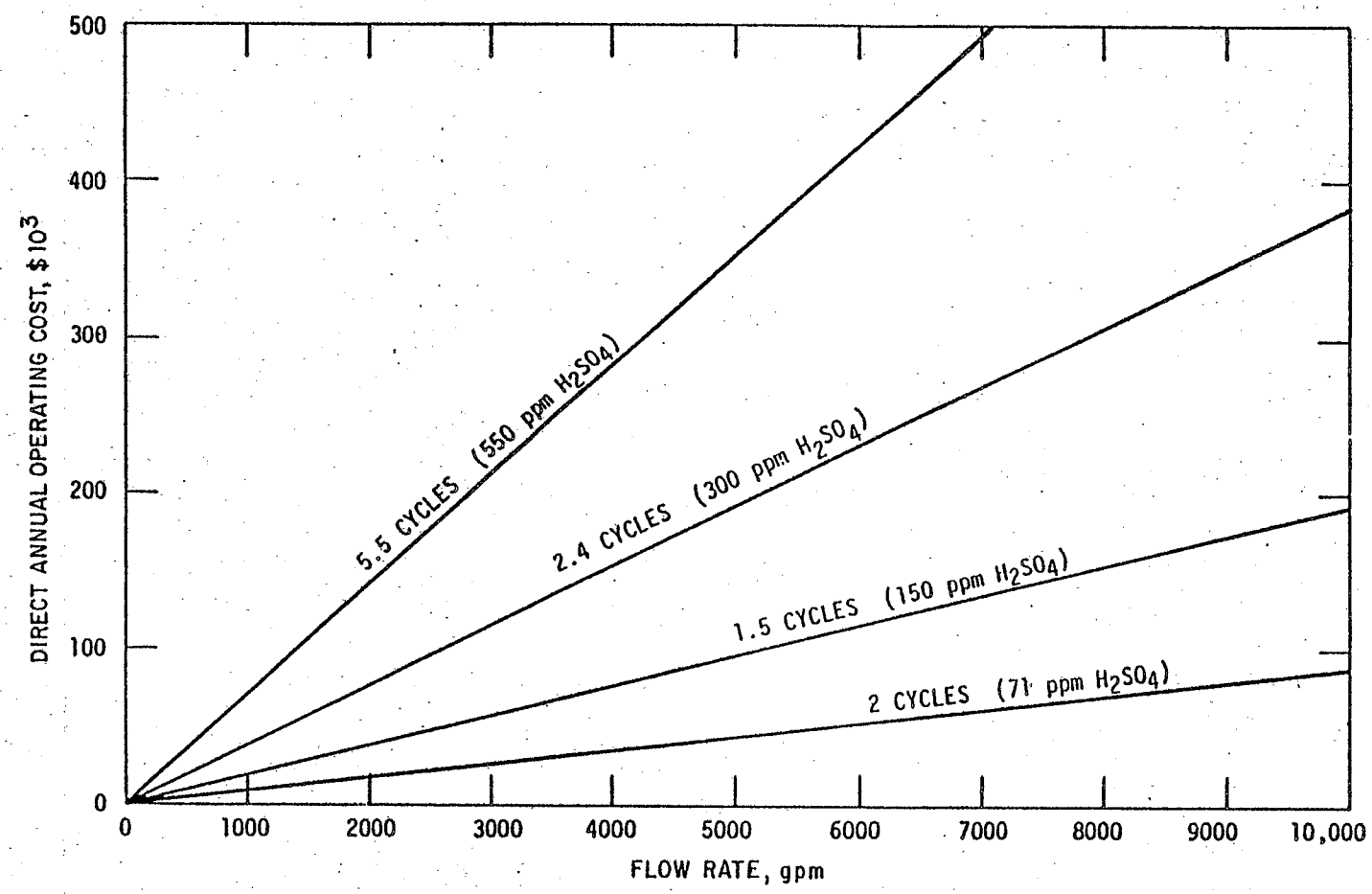

SOURCE: WPA

FIGURE 5.2-10 COST OF COOLING WATER TREATMENT

For example, the foul water after steam stripping can be concentrated by evaporation, whereby most of the water and volatile components would be removed. The foul water concentrate can then be subjected to chemical oxidation to destroy nonvolatile organics. At this point, only nonvolatile inorganics should remain in the oxidized sludge. The sludge can then be placed in a solar evaporation pond for further concentration of the inorganics. If the treated foul water is used as makeup to the boilers or cooling tower, the blowdowns from these operations can also be placed in the solar pond. A flow scheme depicting the above treatment and reuse options, when applied specifically to the TOSCO II process waters, is presented in Figure 5.2-11, the design and cost data are given in Table 5.2-13, and a cost curve for the pond is presented in Figure 5.2-12.

TABLE 5.2-13. DESIGN AND COST OF SOLAR EVAPORATION POND

Item	Unit	Quantity
Flow Rate to Pond	gpm acre-ft/yr	214 311
Evaporation Rate	in/yr	15
Pond Area	acres	300
Liner (chlorosulfonated polyethylene)	10^3 ft^2	13,000
Fixed Capital Cost	$\$10^3$	16,600
Direct Annual Operating Cost	$\$10^3$	
Maintenance @ 2%*		270

* Maintenance is based on the fixed capital cost less contingency.

Source: WPA estimates.

5.2.4 Dissolved Organics

Removal of volatile organics by stripping may be sufficient for reuse of process waters in processed shale moisturizing; however, nonvolatile organic components are not removable by stripping. Therefore, for higher quality uses, further treatment may be necessary. Some of the available approaches are discussed below.

Inventory of Control Technologies--

The technologies available for dissolved organics control are shown in Figure 5.2-13 and are described in Table 5.2-14.

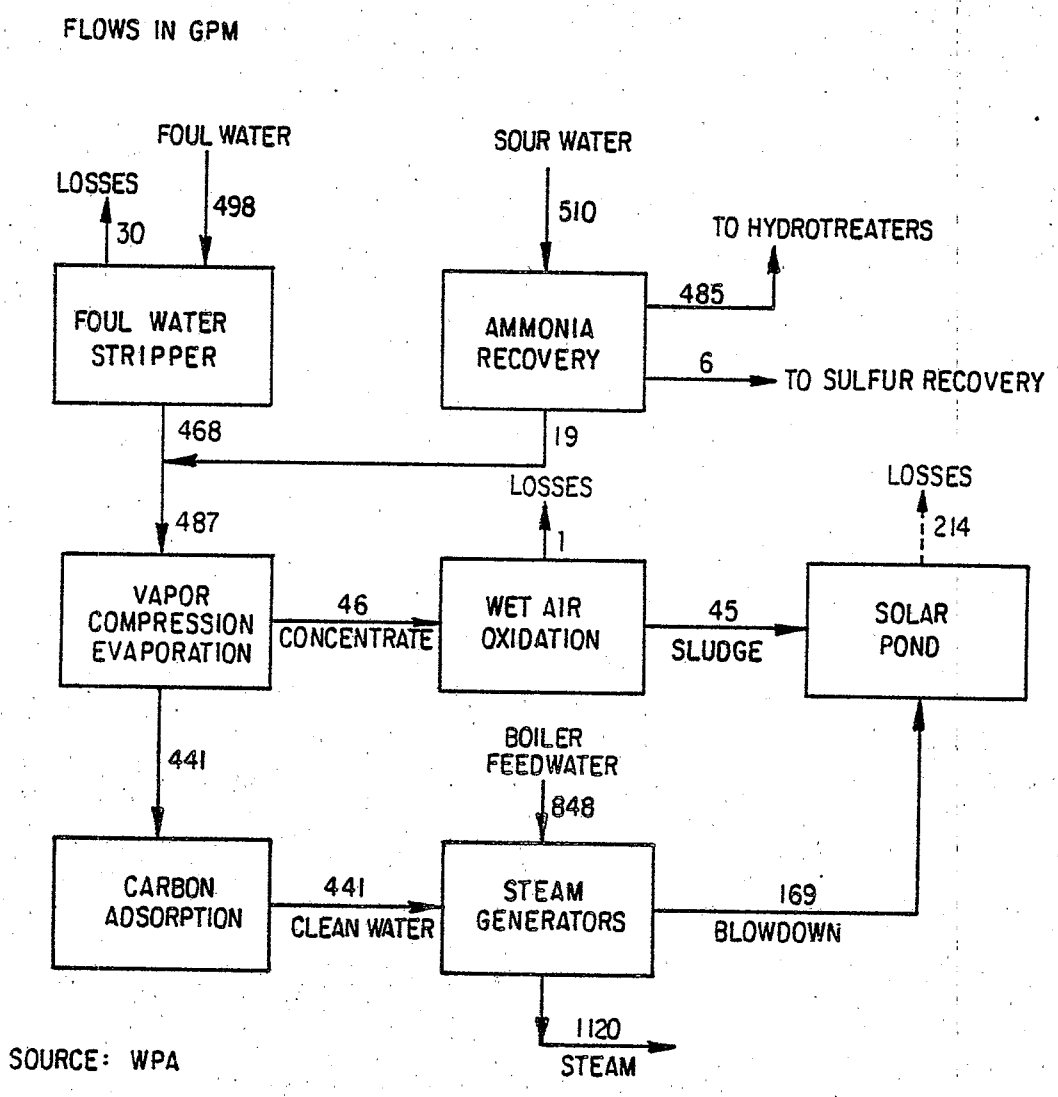

FIGURE 5.2-11 FLOW SCHEME FOR SOLAR EVAPORATION TREATMENT

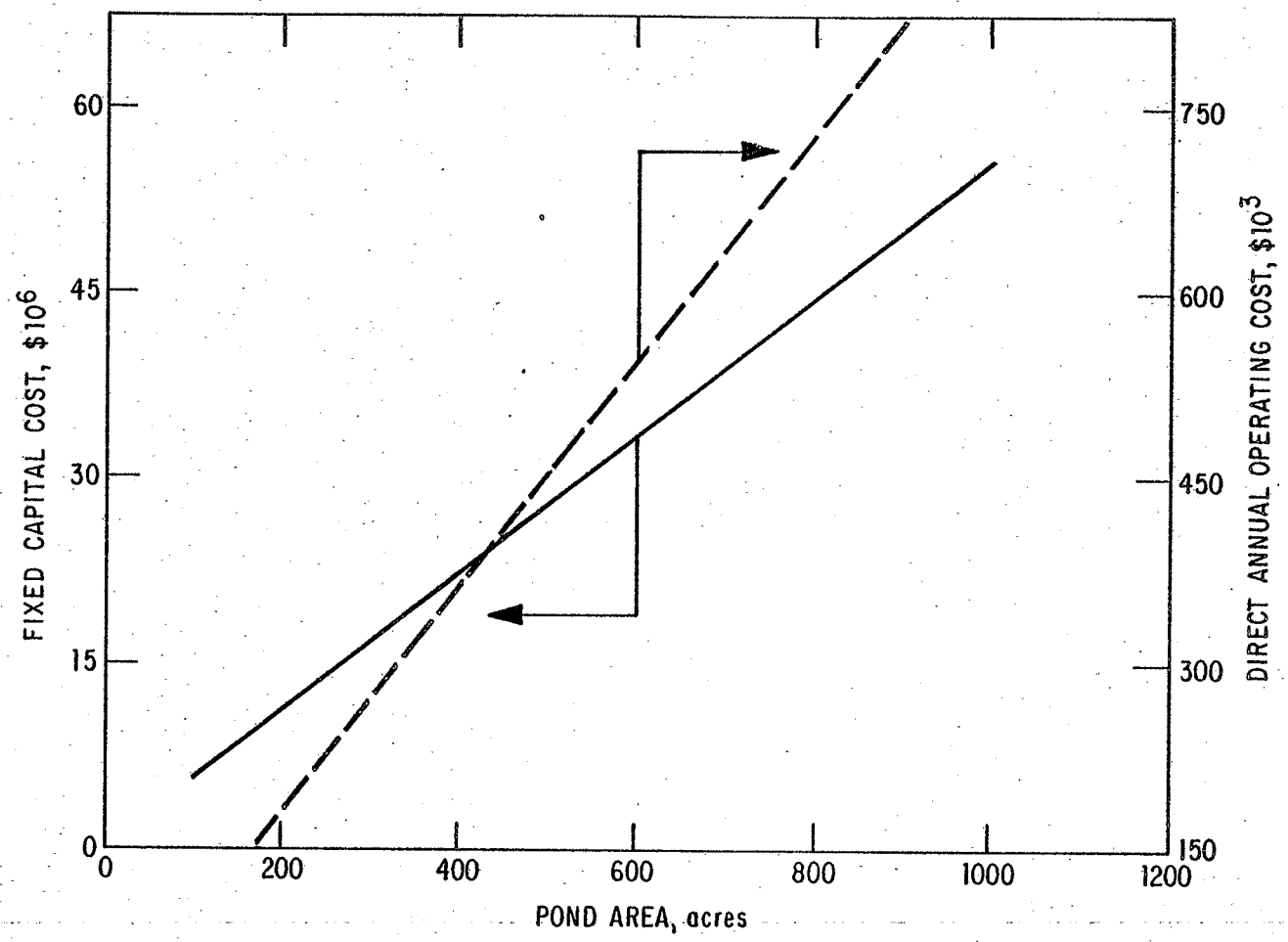

SOURCE: WPA

FIGURE 5.2-12 COST OF SOLAR POND

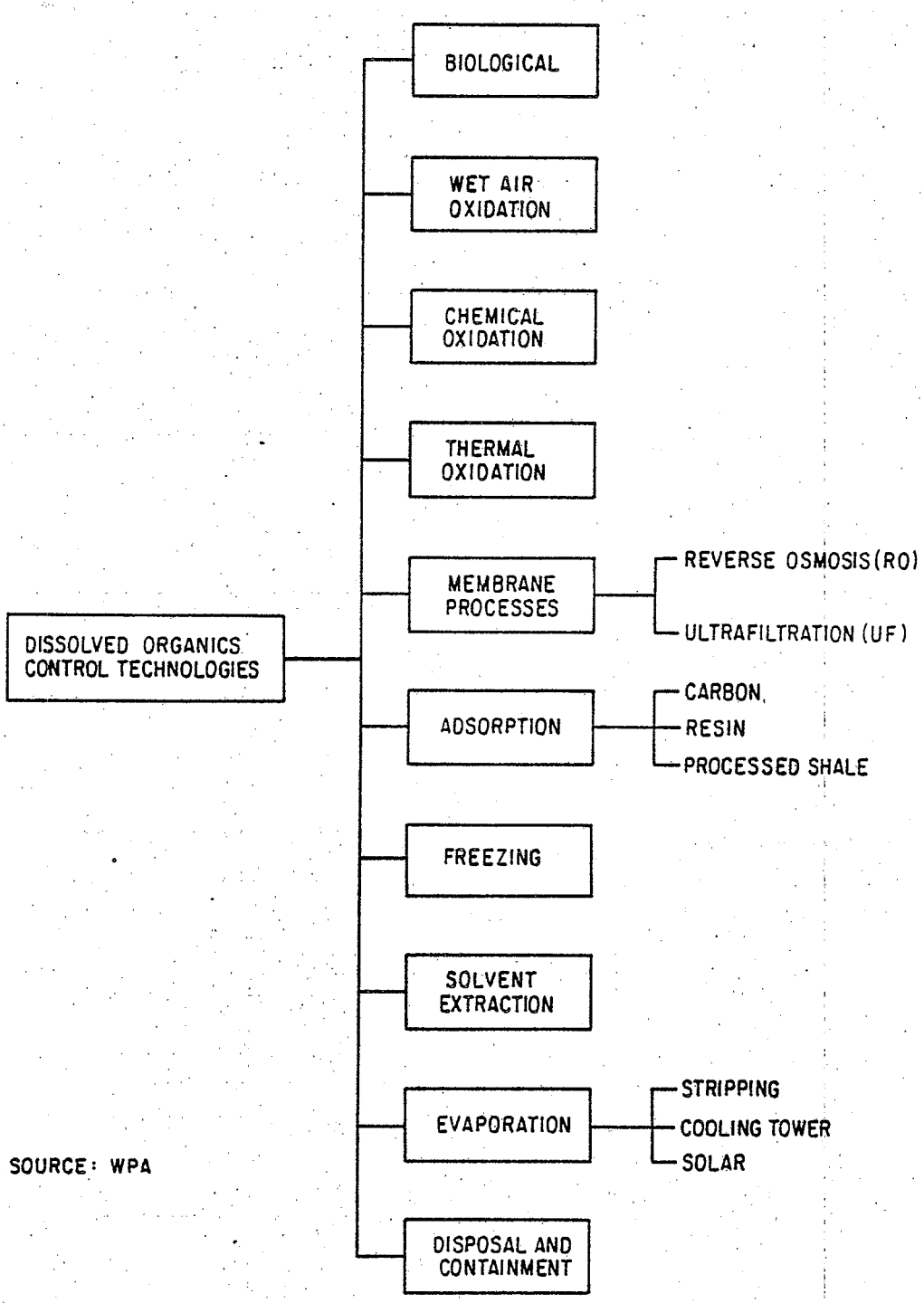

SOURCE: WPA

FIGURE 5.2-13 DISSOLVED ORGANICS CONTROL TECHNOLOGIES

TABLE 5.2-14. KEY FEATURES OF CONTROL TECHNOLOGIES FOR DISSOLVED ORGANICS

Control Technology	Operating Principle	Components Removed	Removal Efficiency	Feed Requirements/ Restrictions	By-products and Wastes	Comments
Biological	Oxidation to CO_2 and H_2O (aerobic) or reduction to CH_4 (anaerobic) in the presence of suspended bacteria.	TOC, BOD, COD.	50% removal of TOC typical for retort waters. Efficiency enhanced by addition of PAC.	Relatively constant feed temperature and pollutant loadings are required to minimize "shocks" to the system. Air or oxygen must be added to aerobic systems. Supplemental nutrients may be required.	Biosludge, CO_2 in aerobic, CH_4 in anaerobic process.	Long residence times (days) require large reactor vessels. Air emissions during aeration may require that the vessels be enclosed.
Wet Air Oxidation	Direct reaction of O_2 with wastewater in a closed, pressurized vessel at elevated temperatures.	TOC, BOD, COD, as well as some oxidizable inorganics.	90+% removal of BOD, COD, TOC is possible in a system with a residence time of one hour or greater.	Air or oxygen; heat if autothermic reaction conditions are not present.	Vent gases containing CO, CO_2, light hydrocarbons, NH_3, sulfur species.	Promising, but not proven in this application. Fairly rigorous construction materials are required.
Chemical Oxidation	Reaction of organics in wastewater with O_3, peroxides or chlorine-based oxidants.	TOC, BOD, COD, oxidizable inorganics.	90+% achievable depending upon conditions of operation.	Oxidant.	Vent gases, wastewater and reaction products.	Chlorine-based oxidants may cause problems with treated wastewater.
Thermal Oxidation	Organics are combusted and the water stream is simultaneously evaporated.	All oxidizable organics.	Essentially 100% in properly designed system.	Feed should be concentrated to reduce fuel required for water evaporation.	Flue gases.	If NH_3 or sulfur species are present, NOx and SO_2 emissions may require control. Effective but expensive control.
Membrane Processes (UF, RO)	Separation of water and dissolved matter by semi-permeable membrane under influence of pressure field.	Large molecules (UF); intermediate size and ionizable molecules (RO).	50-98% of separable components.	Filtration, pH adjustment, removal of foulants.	Concentrate stream, spent membranes.	Long-term membrane fouling not yet studied.
Adsorption (Carbon, Resin, Processed Shale)	Adsorption of organics in water by activated carbon or polymeric resin. Powdered activated carbon has been used in conjunction with biological processes.	Many organics.	50% removal of TOC typical for raw and pretreated oil shale wastewaters.	Adsorbent.	Spent adsorbent.	Probably more effective as a polishing rather than a bulk organics removal process.

(Continued)

TABLE 5.2-14 (cont.)

Control Technology	Operating Principle	Components Removed	Removal Efficiency	Feed Requirements/ Restrictions	By-products and Wastes	Comments
Freezing	Cooling to form pure ice crystals which are separated from the concentrated brine.	TOC, TDS.	90+% possible.		Concentrate stream, ice.	Volatile components are removed along with the nonvolatiles. Not yet demonstrated commercially.
Solvent Extraction	Wastewater is intimately mixed with a water-immiscible organic solvent. Dissolved organics partition occurs between water and organic solvent phase.	Components soluble in organic solvent used.	Found to be ineffective for oil shale wastewaters.	Solvent, solvent regeneration system.	Recovered organics.	Will not be used unless suitable solvent is found.
Evaporation (Stripping, Cooling Tower, Solar)	Evaporate volatile components by applying heat via steam, solar energy, or exchange with the cooling water return from the plant. Simultaneously concentrate the nonvolatile compounds.	TOC, TDS.	Variable, depending on the volatility of the compounds.	Removal of volatile components preferred.	Overhead vapors and concentrate stream.	Direct steam stripping may remove azeotropic components. Slow air and biological oxidation are possible with the cooling tower and solar evaporation.
Disposal and Containment	Fixing of the contaminants on a substrate or disposal or containment with isolation from surroundings.	TOC, TDS.	Variable, depending upon the method used and surrounding factors.	Removal of volatile components preferred.		The wastewater may be contained, or reinjected, underground. Contaminants may be chemically and physically fixed on the processed shale.

Source: WPA.

Biological treatment. Biological processes may be aerobic, where organics are oxidized to carbon dioxide and water, or anaerobic, where the organics are reduced to methane. Both approaches produce sludge as a waste. Aerobic processes are faster and less susceptible to toxicity problems than anaerobic processes, but oxygenation equipment is required. Bench-scale tests on retort waters have shown that minor changes in retort water composition can result in a significant reduction in the performance of a well-acclimated system. In the presence of biorefractory (nonbiodegradable) organics, powdered-activated carbon may be added to the bioreactors to achieve acceptable reduction in organic content. Necessary pretreatment includes stripping, pH adjustment, and nutrient addition; control of specific toxic materials may be required as well (Adams and Eckenfelder, 1974; Hicks, et al., June 1979; Hicks and Wei, December 1980).

Wet air oxidation (WAO). This is a procedure for the destruction of organic matter dissolved or suspended in water or wastewater by oxidizing with air at high temperatures. The temperatures used are above the normal boiling point of water, and the reaction is carried out under pressure to prevent boiling. The pressure is usually 600 psig or above. The degree of oxidation achieved depends on the temperature and the material oxidized.

The advantage of WAO is that the organics do not have to be biodegradable to be oxidized. In fact, WAO often produces biodegradable substances from refractory material. For economic reasons, it is recommended that WAO systems be designed to remove no more than 80% of the organics. The optimum effluent is one that has a COD/BOD ratio of unity, i.e., the chemically oxidizable material is also biologically oxidizable. Biological oxidation can be used as a post treatment (Water Purification Associates, December 1975; Wilhelmi and Knopp, August 1979).

The WAO procedure is normally used for high strength wastes because costs scale with the volume of water to be treated. The energy needs for WAO often can be supplied by heat released in the process itself if the wastewater has a high concentration of reactive material. It is an expensive process and would be considered only for high strength wastes not amenable to other treatments, such as solvent extraction.

Chemical oxidation. In this process, oxidation of the organics is caused by adding oxidizing agents to the wastewaters. The oxidants are usually comprised of ozone, peroxides, chlorine, chlorates, etc. These chemicals are nonselective; that is, they oxidize total organic carbon as well as some inorganics. The oxidation may be carried out at ambient temperature, which is an advantage. Formation of obnoxious wastes is likely with chlorinated oxidants. Explosion is also a possibility under uncontrolled conditions.

Thermal oxidation. The wastewater is evaporated and the dissolved organics are simultaneously combusted by directly firing burners that are submerged under the wastewater. Organic nitrogen and sulfur compounds will convert to NOx and SO_2, which is a disadvantage. Additional waste gases may form if the fuel combustion is incomplete. Heat transfer within the wastewater is efficient; however, due to the presence of a large amount of

noncondensable combustion gases, waste heat recovery from the overhead vapors may not be practical. Energy requirements can be reduced by using a preconcentrated wastewater.

Reverse osmosis. In addition to removing inorganics, this process removes organics to a certain extent, particularly if the organics are ionized. Tests on in situ retort waters have shown that, at a high pH, about 95% of the organics are removed. Modern polyamide thin film membranes are available for high pH operation, but additional data on membrane fouling characteristics with retort waters are required. The concentrate stream produced requires treatment, possibly by WAO (Water Purification Associates, December 1975; Hicks and Liang, January 1981).

Ultrafiltration. In addition to separation of oils and suspended particles, ultrafiltration will also separate large organic molecules (MWt ≧ 1,000). It is unlikely that ultrafiltration will be incorporated into a treatment train for the removal of large organic molecules, as these are not a significant fraction of total organics in retort waters. However, ultrafiltration may be used for emulsified oil separation and, in that case, would serve as a useful pretreatment to RO (Water Purification Associates, December 1975).

Carbon adsorption. This technology is used to remove organic materials from sewage and industrial water, as well as taste and odor from drinking water. It is usually used in conjunction with biological treatment as a pretreatment or polishing treatment (Cheremisinoff and Ellerbusch, 1978; Water Purification Associates, December 1975). Laboratory results from combined carbon adsorption and biological treatment of modified in situ oil shale retort water indicate that up to 85% removal of dissolved organics can be achieved compared to approximately 50% removal with biological treatment alone (Jones, Sakaji and Daughton, August 1982).

Activated carbon is produced by charring wood or coal at high temperatures. Charring temperature is the main factor determining the adsorption characteristics of granular or powdered-activated carbon.

Carbon must be regenerated when it is exhausted. The regeneration is accomplished by passing the carbon through a furnace at high temperature, usually around 800-1,000°C, with restricted oxidation to remove the adsorbed layer on the carbon. The quality of carbon after regeneration is slightly lower than the virgin carbon, and small quantities of virgin carbon must be added to retain the required activity.

Activated carbon has ion exchange groups and can be used to remove metal ions from water. It has been found that, under proper conditions of pH and oxidation, some metal ions are adsorbed very strongly.

Regeneration costs are a significant part of overall treatment costs, making the process uneconomical for high strength wastes, for which frequent regeneration is required. Regeneration also is not attractive for small units. Energy costs for running an activated carbon wastewater treatment plant are small, not considering regeneration, and are proportional to the

pressure drop across the activated carbon contactor. Fouling in carbon adsorption units is reduced if the influent stream is adequately pretreated.

Resin adsorption. Resin adsorption is a physical process for removal of organic materials. Normally, it is considered as a polishing step, after bulk organic removal in upstream wastewater treatment steps, but may be used on waters having higher loadings than would be used for carbon. Also, it is useful for removal of specific toxic materials and phenol.

The polymer (resin) surface can be made hydrophobic or hydrophilic. Activated groups can be introduced to increase selectivity. Regeneration can be accomplished by washing with methanol, weak acid or weak base. Steam can be used to vaporize adsorbed materials.

Adsorption on processed shale. This method has been proposed for organics control in retort waters at oil shale plants. In studies at Lawrence Berkeley Laboratory, processed shale from the Lurgi, Paraho, TOSCO II, and three simulated in situ processes were contacted with four separate simulated in situ retort waters in batch and continuous (column) systems (Fox, Jackson and Sakaji, 1980). These studies indicated that the processed shale reduces the inorganic carbon by 50-98%, the organic carbon by 7-73%, and elevates the pH from initial levels of 8-9 to a final level of 10-11. An advantage of the process is that the increase in pH would facilitate downstream ammonia stripping and would reduce the loading on downstream organic removal steps.

Freezing. As previously discussed, freezing also removes dissolved organics. One advantage of freezing over evaporation processes is that volatile organics are removed as well. This process has yet to be applied commercially (Barduhn, September 1967; Water Purification Associates, December 1975).

Solvent extraction. When wastewater is contacted with a sparingly soluble immiscible organic solvent, the dissolved organic contaminants partition themselves between the aqueous and organic phases according to their relative solubility in each. The organic phase is separated and the dissolved contaminants removed in a distillation step. Alternatively, the solvent and dissolved organics may be incinerated. Solvent extraction is most economical for high strength wastes because costs scale with the volume of water to be treated and are relatively independent of the amount of substances removed. Unfortunately, effective solvents for the wide range of organics present in retort water have not been found, and it appears unlikely that solvent extraction will be useful in retort water treatment (Hicks, et al., June 1979).

Stripping. Volatile organics are removed along with ammonia and the acid gases in a stripping column or other thermal evaporative process. The amount of organics removed depends essentially on their volatility relative to water. Organics in retort water are relatively nonvolatile and indications are that less than 20% will be removed in a column stripping 99% of the ammonia. Organics in gas condensates, such as the TOSCO II foul water, are significantly more volatile, and bench-scale tests have shown that up to 85%

of the organics are removed along with the ammonia. The volatile organics may then be incinerated, along with the other stripped gases, or may be adsorbed from the gas stream prior to ammonia recovery (Hicks and Liang, January 1981).

Cooling tower. The cooling tower may be regarded as a water treatment system. As such, its main function is to concentrate the dissolved salts, which may then be removed at lower cost in a sidestream or blowdown treatment stage. When using process wastewaters as cooling tower makeup, upstream removal of ammonia and organics need not be as efficient (and therefore as expensive) as when the wastewater is discharged. It has been demonstrated that refinery phenolic wastewaters can be used in a cooling tower and that bio-oxidation of phenol will occur with very high efficiencies (Hart, June 11, 1973). The conditions necessary for successful bio-oxidation are low sulfide (below 2 ppm) and small variations in pH (between 7.8 to 8.3). Chlorination is used to prevent biological growth. Corrosion of steel has been low. Ammonia will not concentrate in a cooling tower, but it will vaporize with the water.

Solar evaporation. Solar radiation incident upon the surface of an open evaporation pond is used as the energy source. Large, lined, shallow ponds are feasible for this application. The rate of evaporation depends on humidity, wind velocity and solar energy absorbed. Dyes may be added to the wastewater to increase the energy absorption, with a consequent increase in the rate of evaporation. Land is a major cost, and problems related to final disposition of the concentrated wastes may arise. Biological and slow air oxidation of the organics may occur. Volatile and odoriferous components must be removed from the wastewater prior to its evaporation.

Disposal and containment. Wastewater can be "controlled" with a minimum of treatment by some disposal or containment options. These options include processed shale wetting as part of the disposal procedure. The water and contaminants are either "cemented" or adsorbed into the processed shale. Provision of an impermeable lining under the shale pile can prevent water from percolating through to the ground if the shale does not cement. Water used for processed shale wetting should not contain any volatiles. Since water used for revegetation and leaching of processed shale piles will contribute to runoff, it may have to be of considerably higher quality than that used for moistening.

Wastewater may be injected underground (deep well injection), as in disposal of some oil well brine wastes (Mercer, Campbell and Wakayima, May 1979). However, costs for underground injection may be significant because deep wells are required to prevent contamination of upper level aquifers. Legal and environmental problems associated with underground injection have not been clarified. Reinjection of mine drainage waters may be a possibility for disposal of this stream when excesses exist. Geologic and hydrologic effects may require evaluation.

Control Technologies Analyzed--

A major stream requiring control of dissolved organics is foul water (stream 29). Volatile organics are already removed from the foul water by steam stripping, but the nonvolatile organic components may still remain in the stripped foul water (stream 38). In addition, some organics from the foul water stripper overhead and sour water may be held down in the ammonia fractionator of the ammonia recovery (e.g., Phosam-W) unit. These organics are bled down and combined with the stripped foul water.

Biological oxidation, suggested as a possible wastewater treatment technology by Colony (Colony Development Operation, 1974), was examined for the removal of bulk organics in the combined process waters. It is applicable only to biologically degradable organic matter (assumed to be about 50% of the total organics in the foul water); therefore, only a partial control is expected from the process. Biological oxidation of oil shale wastewaters has been studied, but it is unclear whether the treatment is necessary when the water is used for processed shale moisturizing (Hicks and Wei, December 1980). The design basis and cost information for biological oxidation are presented in Table 5.2-15, and a cost curve for the process when applied specifically to the TOSCO II stripped foul water is presented in Figure 5.2-14. The description and material balance for the treatment are given in Sections 3.3.12 and 4.2.8, respectively.

Other Control Technologies Analyzed--

If the use of wastewaters with high organics loading is not acceptable for processed shale moisturizing or reuse in the plant, additional organics removal efficiency can be achieved by several technologies, such as reverse osmosis, vapor compression evaporation, carbon adsorption and wet air oxidation. Again, these technologies have not been proposed by Colony, but they were analyzed based on their potential for application in oil shale wastewater treatment.

Reverse osmosis (RO) is a useful technology in that it affords simultaneous removal of the dissolved organics and inorganics. With this technology, the wastewater is forced through a semipermeable membrane which allows the water to pass through but rejects the dissolved matter, especially that which is highly ionized. At optimum pH, up to 95% of the organics and inorganics can be rejected. The permeate is usually a fairly clean water that is suitable for high quality water needs. Reverse osmosis of in situ retort water has been successfully demonstrated on a bench scale (Hicks and Liang, January 1981). A specific application of the RO technology to the TOSCO II foul water is illustrated in Figure 5.2-15; the estimated compositions of the feed, permeate, and concentrate are given in Table 5.2-16; design and cost data for the RO unit are presented in Table 5.2-17; and a cost curve for the treatment is given in Figure 5.2-16.

Vapor compression evaporation (VCE) also removes the nonvolatile organics and inorganics from the wastewaters. A majority of the water is evaporated along with the volatile components. The vapors are then heated by mechanical compression and used indirectly to heat the wastewater. Upon heat

TABLE 5.2-15. DESIGN AND COST OF BIOLOGICAL OXIDATION OF STRIPPED FOUL WATER

Item	Unit	Quantity
Stripped Foul Water Flow Rate	gpm	468
Organic Loading		
TOC	mg/l	1,680
COD	mg/l	5,890
BOD	mg/l	2,940
Fixed Capital Cost	$\$10^3$	
Covered basin (154,000 ft^3)		1,130
Mixers		130
Clarifiers		130
Filter		120
Oxygen plant (1,000 lb/hr)		170
Contingency and contractor fee		386
TOTAL		2,066
Direct Annual Operating Cost	$\$10^3$	
Maintenance @ 4%[a]		67
Labor, 24 hr/day @ $30/hr		237
Electricity @ 3¢/kW-hr		32
Oxygen (operating cost only @ 0.6¢/lb)		51
Phosphorus @ 52¢/lb		38
TOTAL		425
Total Annual Control Cost[b]	$\$10^3$	834

[a] Maintenance is based on the fixed capital cost less contingency.

[b] See Section 6 for details on computation of the total annual control cost.

Source: WPA estimates based on information from Hicks and Wei, December 1980.

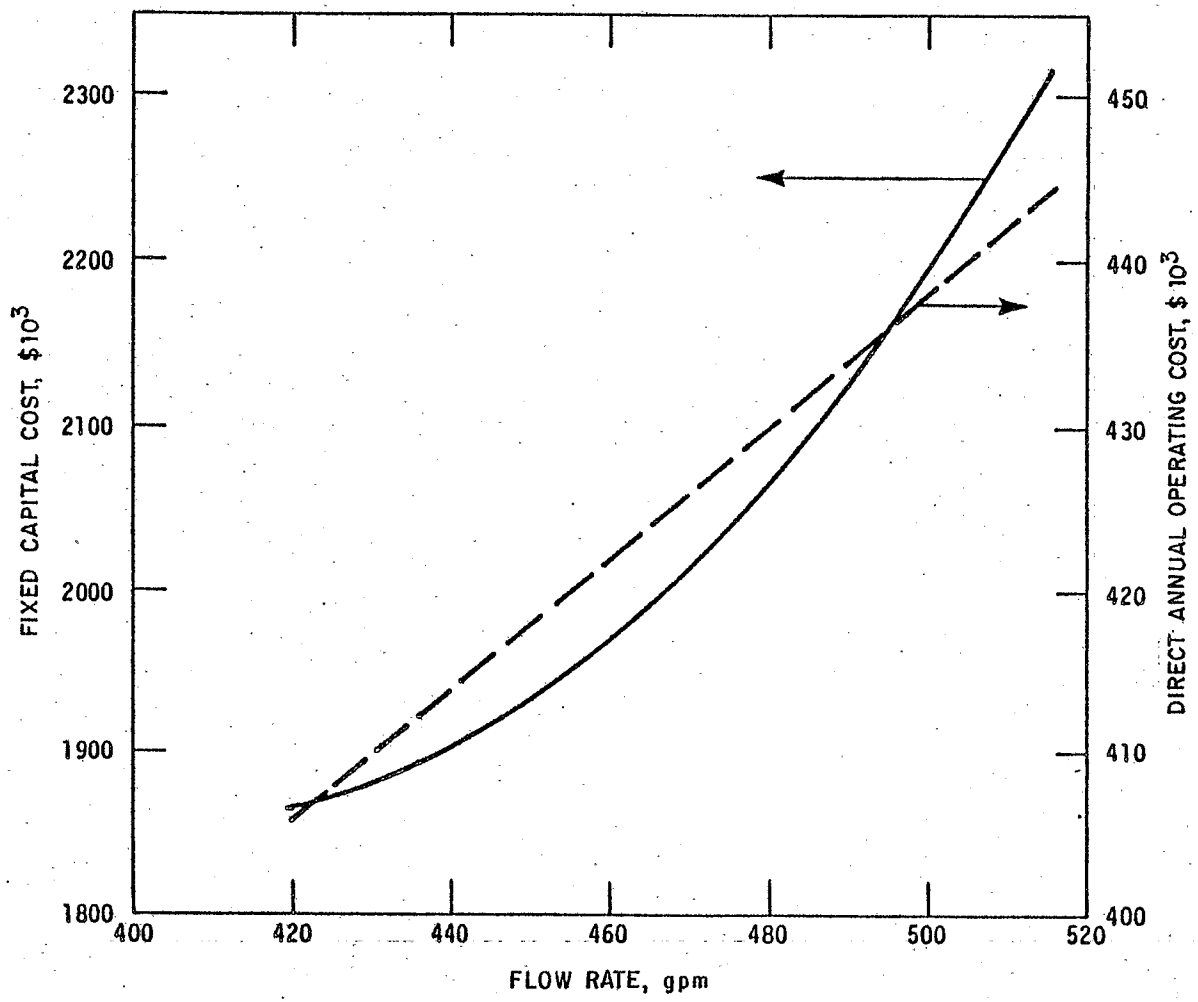

SOURCE: WPA

FIGURE 5.2-14 COST OF ORGANICS CONTROL WITH BIOLOGICAL OXIDATION

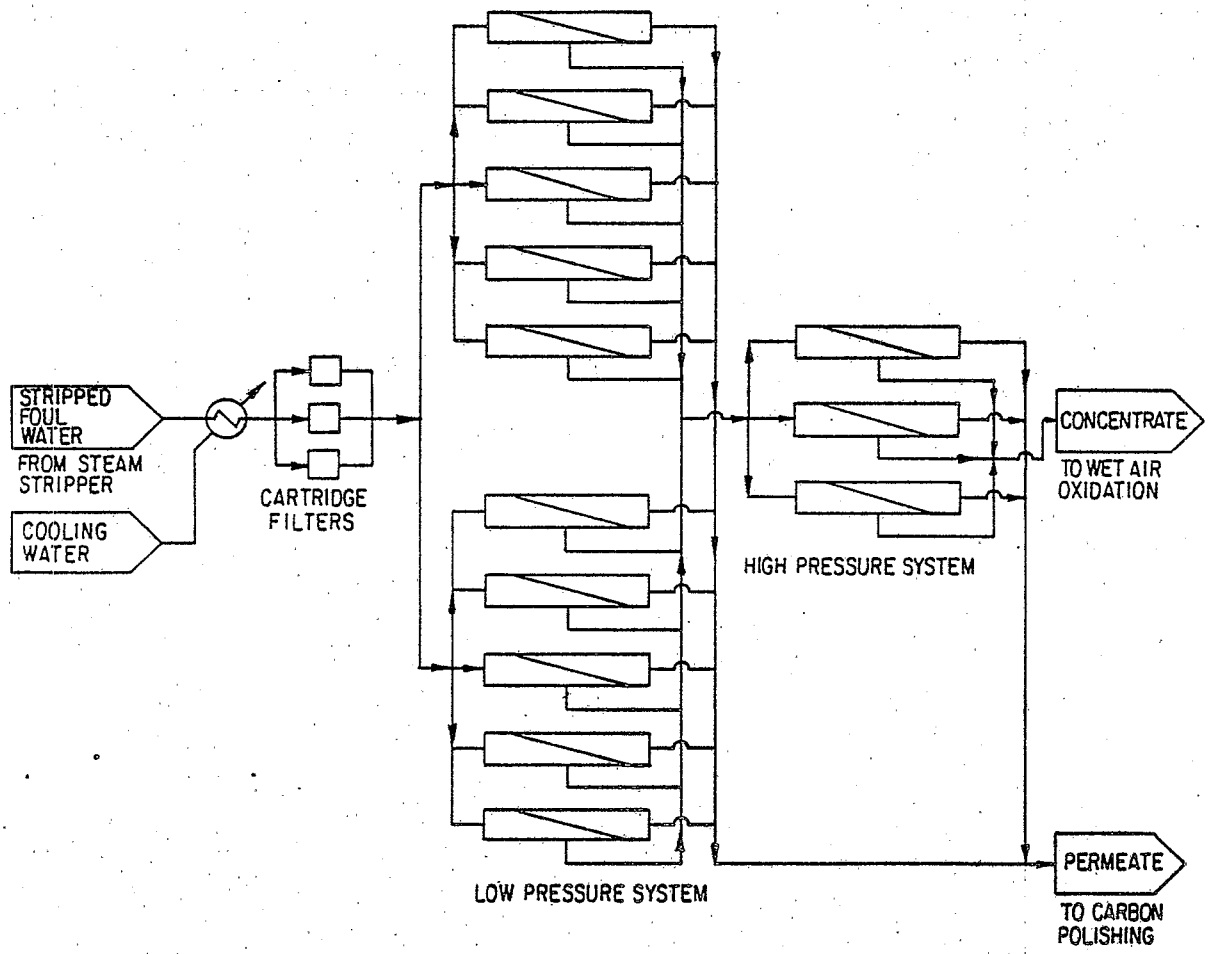

STREAM IDENTITY	STRIPPED FOUL WATER	R O PERMEATE	R O CONCENTRATE	COOLING WATER
FLOW RATE:				
10^3 lb/hr	234.3	200	34.3	
gpm	468	400	68	500
TEMPERATURE, °F	100	110	110	80
PRESSURE, psig	AMB	AMB	AMB	AMB

SOURCE: WPA

FIGURE 5.2-15 REVERSE OSMOSIS PROCESS FLOW SCHEME

TABLE 5.2-16. COMPOSITION OF STRIPPED FOUL WATER BEFORE AND AFTER REVERSE OSMOSIS TREATMENT

Component	Stripped Foul Water Feed		Reverse Osmosis		
			Permeate		Concentrate
	Concentration, mg/l	Flow, lb/hr (gpm)	Concentration, mg/l	Flow, lb/hr (gpm)	Flow, lb/hr (gpm)
NH_3	200	48	60	12	36
CO_2	--	--	--	--	--
H_2S	4	1	3	0.5	0.5
TOC	1,680	394	100	20	374
Ca	6	1.4	--	--	1.4
Mg	2	0.5	--	--	0.5
Na	5	1.2	--	0.1	1.1
CN	12	2.8	2	0.3	2.5
Si	1	0.3	--	0.1	0.2
H_2O	--	233,915 (468)	--	200,000 (400)	33,915 (68)
TOTAL		234,364.2		200,033	34,331.2

Source: WPA estimates based on information from Hicks and Liang, January 1981.

TABLE 5.2-17. DESIGN AND COST OF REVERSE OSMOSIS TREATMENT OF STRIPPED FOUL WATER

Item	Unit	Quantity
Stripped Foul Water Flow Rate	gpm	468
Permeate Flow (85% recovery)	gpm	400
Low Pressure (500 psi) System		
No. of membrane elements (UOP, TFC 8,600 PA)	--	138
No. of pressure vessels	--	32
High Pressure (800 psi) System		
No. of membrane elements (Film Tec)	--	66
No. of pressure vessels	--	11
Fixed Capital Cost	$\$10^3$	1,686
Direct Annual Operating Cost	$\$10^3$	
Maintenance @ 4%*		55
Labor, 12 hr/day @ $30/hr		118
Electricity @ 3¢/kW-hr		53
Membrane replacement (18-month life)		204
TOTAL		430

* Maintenance is based on the fixed capital cost less contingency.

Source: WPA estimates based on information from Hicks and Liang, January 1981.

transfer, more water is vaporized and the compressed vapors condense to a fairly clean water. This operation is continued until sufficient concentration of the wastewater is achieved. The quality of the condensate is generally appropriate for uses requiring clean water. Vapor compression evaporation has proven effective for oil shale wastewaters in bench-scale applications (Wakayima, May 1981). A process flow diagram for the VCE technology is presented in Figure 5.2-17, while Tables 5.2-18 and 5.2-19 contain the stream composition data and design and cost information, respectively. A cost curve for the process, based on the specific design used in this manual, is presented in Figure 5.2-18.

The permeate from RO or the condensate from VCE may still contain some organics--the low molecular weight, unionized compounds in the former case and the volatile, steam strippable compounds in the latter case. Further organics polishing can be achieved by adsorption on activated carbon. With this technology, the wastewater is allowed to pass through a bed of activated

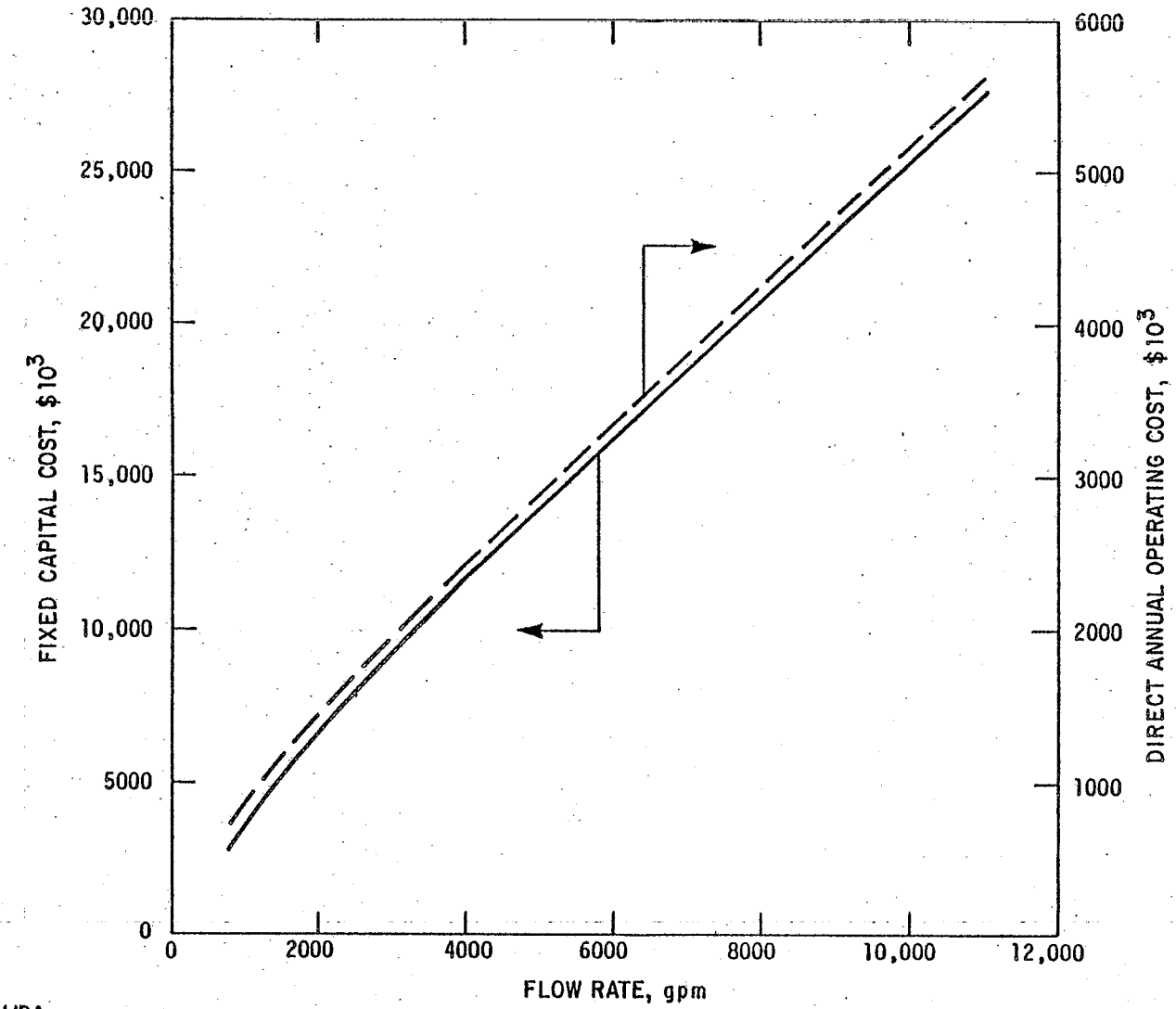

SOURCE: WPA

FIGURE 5.2-16 COST OF ORGANICS REMOVAL WITH REVERSE OSMOSIS

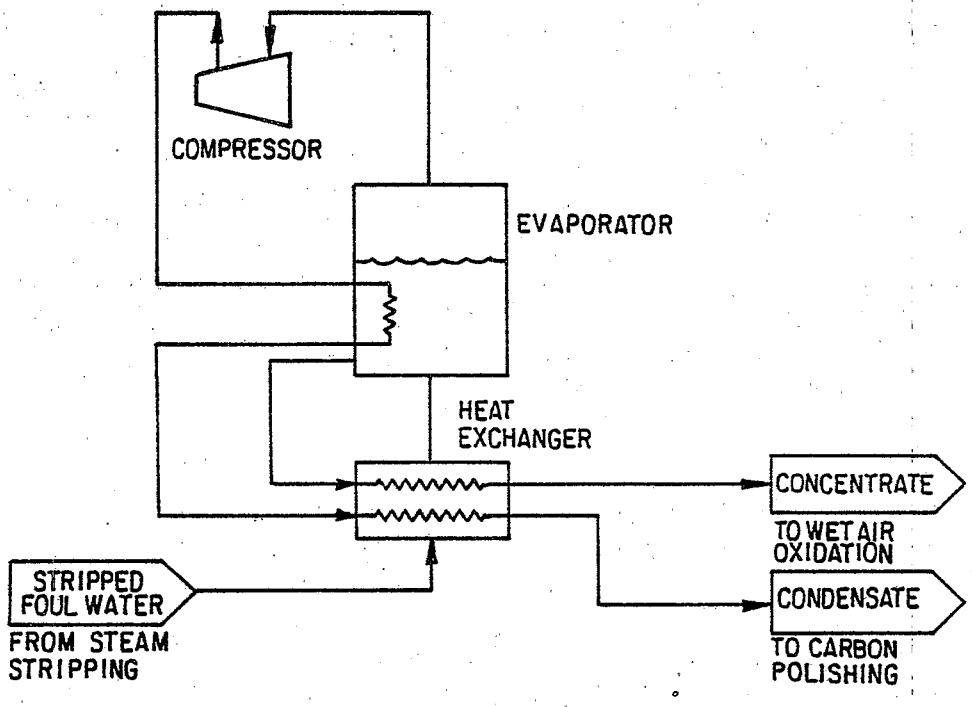

STREAM IDENTITY	STRIPPED FOUL WATER	CONDENSATE	CONCENTRATE
FLOW RATE: 10^3 lb/hr	243.9	220.8	23.1
gpm	487	441	46
TEMPERATURE, °F	132	150	150
PRESSURE, psig	AMB	AMB	AMB

SOURCE: WPA

FIGURE 5.2-17 VAPOR COMPRESSION EVAPORATION PROCESS FLOW SCHEME

TABLE 5.2-18. COMPOSITION OF FOUL WATER AFTER VAPOR COMPRESSION EVAPORATION TREATMENT

Component	Stripped Foul Water Feed*		Evaporator		
			Condensate		Concentrate
	Concentration, mg/l	Flow, lb/hr (gpm)	Concentration, mg/l	Flow, lb/hr (gpm)	Flow, lb/hr (gpm)
NH_3	200	49	111	25	24
CO_2	--	--	--	--	--
H_2S	4	1	2	0.5	0.5
TOC	1,832	446	341	75	371
Inorganics	26	6	--	0	6
H_2O	--	243,410 (487)	--	220,695 (441)	22,715 (46)
TOTAL		243,912		220,795	23,116

* After blending with sour water stripper blowdown.

Source: WPA estimates based on information from Wakayima, May 1981.

TABLE 5.2-19. DESIGN AND COST OF VAPOR COMPRESSION EVAPORATION OF STRIPPED FOUL WATER

Item	Unit	Quantity
Stripped Foul Water Flow Rate	gpm	487
Condensate Flow (~90% recovery)	gpm	441
No. of Evaporators	--	2
Nominal Capacity of Each Evaporator	gpm	250
Fixed Capital Cost	$\$10^3$	3,410
Direct Annual Operating Cost	$\$10^3$	
Maintenance @ 4%*		111
Labor, 8 hr/day @ $30/hr		79
Electricity, 2,250 kW @ 3¢/kW-hr		532
TOTAL		722

* Maintenance is based on the fixed capital cost less contingency.

Source: WPA estimates based on information provided by Resources Conservation Corp., September 1981.

carbon on which the dissolved organics are adsorbed and a cleaner water emerges. The spent carbon is regenerated periodically by steam or hot gas stripping, and the desorbed material is incinerated before it is vented to the atmosphere. If the bulk organics and inorganics have been removed previously (e.g., by RO or VCE treatments), the carbon adsorption treated water can be used for high quality water needs. Figure 5.2-19 presents the flow scheme for the technology when applied to the TOSCO II foul water, while Table 5.2-20 indicates the clean water compositions for the feed, either from RO or VCE. Table 5.2-21 gives the design specifications and cost information, and Figure 5.2-20 presents a cost curve for the carbon adsorption unit when used on RO and VCE treated waters.

The material rejected by RO and the concentrate from VCE would contain the bulk of the dissolved organics from the wastewater. The organics can be destroyed by chemical oxidation before the wastes are sent for disposal. In comparison to biological oxidation, which destroys only the biodegradable organics, chemical oxidation is nonselective; thus, it will destroy any organic matter.

One available technology for oxidation of the organics is wet air oxidation (WAO). With WAO, the wastewater is subjected to high temperatures

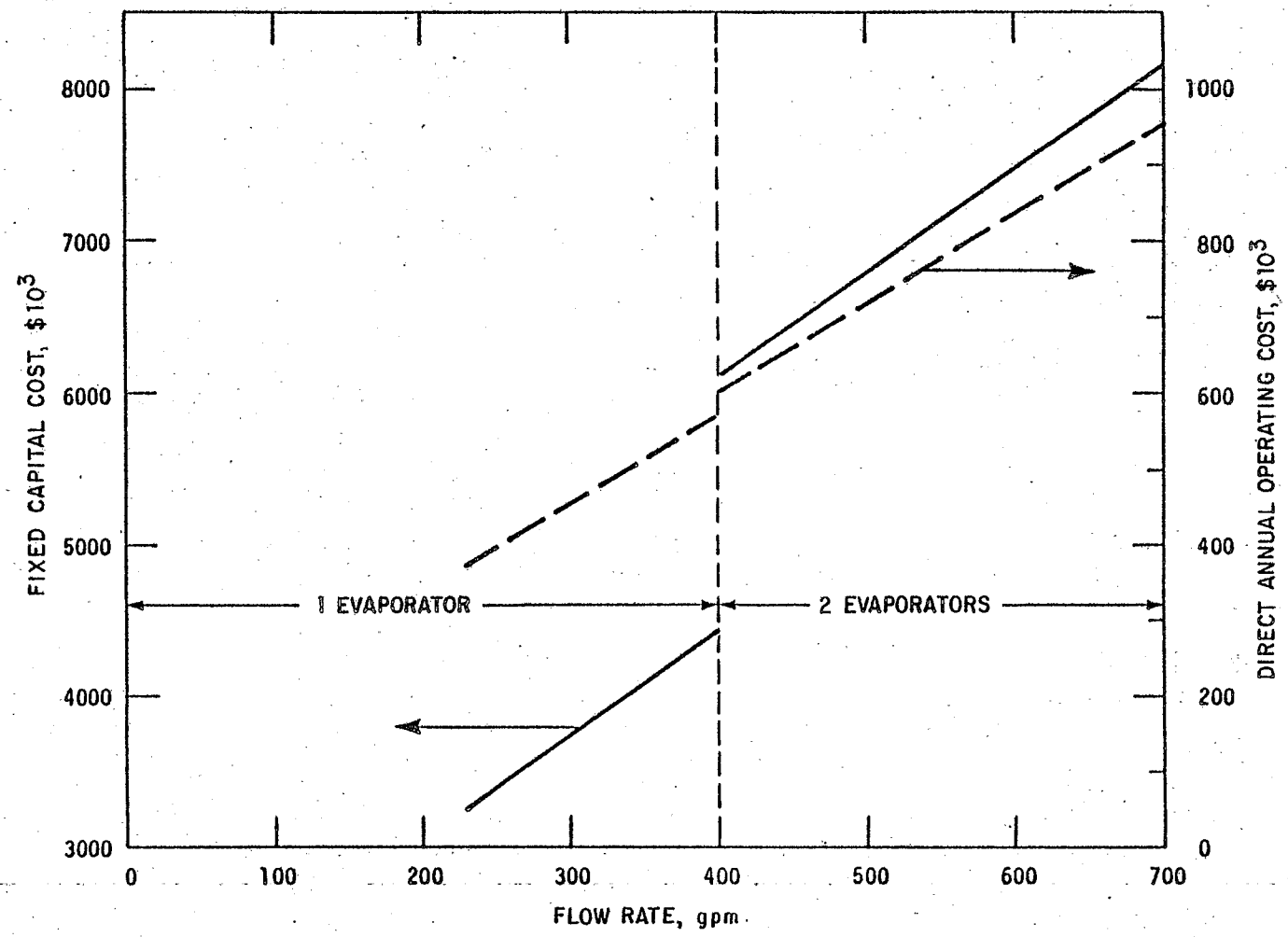

SOURCE: WPA

FIGURE 5.2-18 COST OF ORGANICS CONTROL WITH VAPOR COMPRESSION EVAPORATION

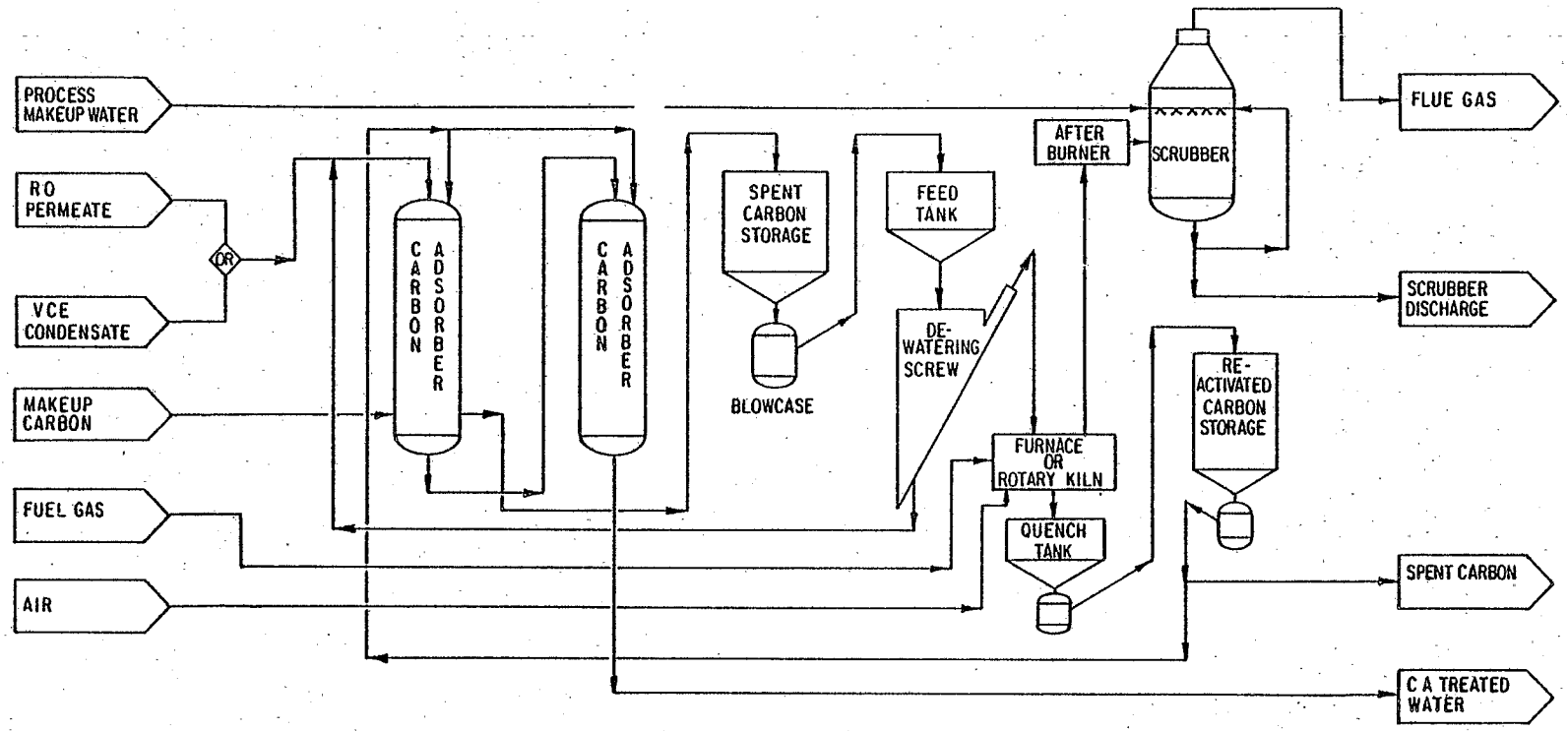

STREAM IDENTITY	FUEL GAS	R O PERMEATE	VCE CONDENSATE	MAKEUP CARBON	AIR	SCRUBBER DISCHARGE	SPENT CARBON	C A TREATED WATER RO	C A TREATED WATER VCE	SCRUBBER FLUE GAS	PROCESS MAKEUP WATER
FLOW RATE: 10^3 ACFM 10^3 lb/hr gpm	10.4(RO) 42.7(VCE)	200.0 400	220.8 441	0.01(RO) 0.04(VCE)	N.D.	N.D.	0.01(RO) 0.04(VCE)	200.0 400	220.7 441	N.D.	N.D.
TEMP., °F	AMB	110	150	AMB	AMB	N.D.	N.D.	AMB	AMB	N.D.	AMB
PRESS., psig	N.D.	AMB ←									← AMB

SOURCE: WPA

FIGURE 5.2-19 CARBON ADSORPTION PROCESS FLOW SCHEME

TABLE 5.2-20. MATERIAL BALANCE FOR THE CARBON ADSORPTION PROCESS

Component	RO Permeate		VCE Condensate	
	Before Treatment Flow, lb/hr (gpm)	After Treatment Flow, lb/hr (gpm)	Before Treatment Flow, lb/hr (gpm)	After Treatment Flow, lb/hr (gpm)
NH_3	12	6	25	12
H_2S	0.5	0.3	0.5	0.2
TOC	20	4	75	15
Inorganics	0.5	0.3	--	--
H_2O	200,000 (400)	200,000 (400)	220,695 (441)	220,695 (441)
TOTAL	200,033	200,011	220,795	220,722

Source: WPA estimates based on information from Water Purification Associates, December 1975.

TABLE 5.2-21. DESIGN AND COST OF ACTIVATED CARBON ADSORPTION FOR RO OR VCE TREATED WATER

Item	Unit	Treated Feed RO	Treated Feed VCE
Stripped Foul Water Flow Rate	gpm	400	441
Organic Loading	mg/l		
TOC		84	325
COD		252	975
Organics Removed	lb COD/hr	40	168
Carbon Capacity	lb COD/lb C	0.6	0.6
Hydraulic Loading	gpm/ft^2	5	5
Total No. of Adsorption Beds	--	4	4
No. of beds on line	--	3	3
Bed Diameter	ft	3.8	4.0
Carbon Volume/Bed	ft^3	130	135
Regeneration Period	days	6	1.5
Carbon Loss in Regeneration (10%)	lb/day	214	900
Carbon Inventory in Beds	lb	12,800	13,400
Furnace Area	ft^2	24	100
Fuel Rate	10^6 Btu/day	5.1	21
Fixed Capital Cost	$\$10^3$	1,600	2,000
Direct Annual Operating Cost	$\$10^3$		
Maintenance @ 4%*		52	65
Labor @ $30/hr		59	108
Fuel @ $\$3/10^6$ Btu		5	22
Carbon replacement @ $1.80/lb		126	530
TOTAL		242	725

* Maintenance is based on the fixed capital cost less contingency.

Source: WPA estimates based on information from Cheremisinoff and Ellerbusch, 1978.

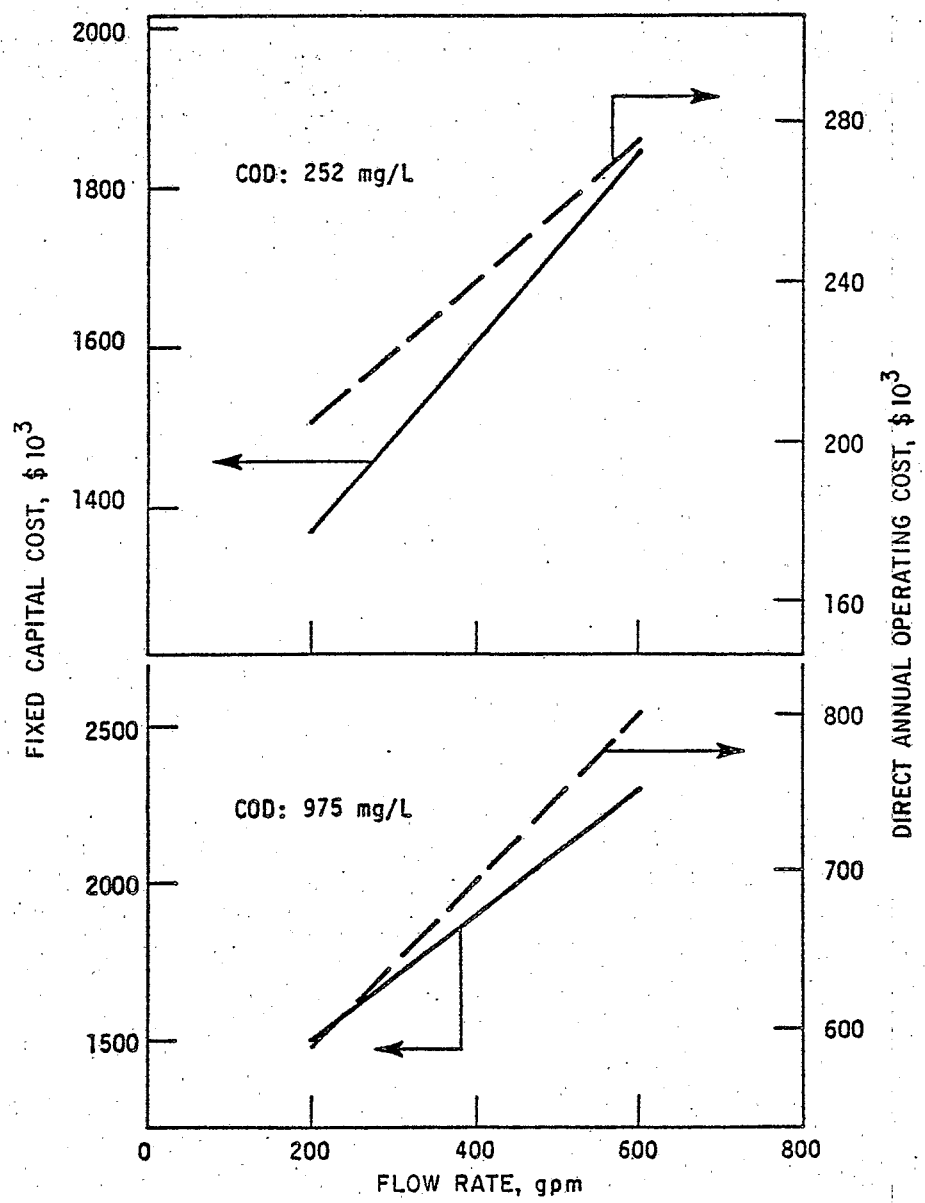

SOURCE: WPA

FIGURE 5.2-20 COST OF ORGANICS CONTROL WITH CARBON ADSORPTION

and pressures, and air or oxygen is introduced into the reactor to cause the oxidation of the organics. Only high strength feeds are economical for WAO treatment; therefore, a preconcentration of the waste, such as by RO or VCE, is desirable. A process flow scheme for the WAO technology is presented in Figure 5.2-21. The composition of the WAO sludge and the design and cost information for the process are given in Tables 5.2-22 and 5.2-23, respectively, while Figure 5.2-22 presents a cost curve for the technology.

5.2.5 Water Requirements

Steam Production--

The steam balance for the TOSCO II plant is presented in Table 5.2-24. Approximately 820,000 lb/hr of steam are produced by the utility boilers, with approximately 70% of this steam being used in consumptive applications such as steam reforming, retort sealing, etc. The remainder is condensed upon use and returned to the boilers. About 20% of the feedwater makeup is removed as blowdown. The losses from consumptive steam uses and blowdown are compensated with clarified and softened river water. Estimated water quality parameters for the boiler feedwater are indicated in Table 5.2-25.

Cooling Water--

Typical cooling water requirements for the three TOSCO II case studies are summarized in Table 5.2-26. Treated river water could be used as the makeup to the cooling tower. The water quality parameters for the cooling water are indicated in Table 5.2-27. The cycles of concentration are kept low, at about 2; the relatively large amount of blowdown is used, after equalization with other streams, for processed shale quenching and moistening. Sulfuric acid is added to the makeup water to control carbonate scaling.

Processed Shale Moistening--

The hot processed shale leaving the TOSCO II retorting area must be cooled and moistened with water in the processed shale moisturizing mixer before being sent to the disposal area. The hot shale is first quenched, resulting in evaporation of approximately 500 gpm of water. The quenched shale is then moisturized, with approximately 1,640 gpm of composite water from the equalization basin, to a final moisture content of approximately 14% to facilitate compaction and stabilization. The optimum moisture content and the extent to which wastewaters should be treated have not yet been determined. The blowdowns from the cooling tower, boilers, and clarifiers could be used for quenching and moistening. These water streams should not contain volatile material which would be released upon contact with the hot shale. Table 5.2-28 indicates the water flow rates (gpm) for quenching and moisturizing.

Processed Shale Disposal--

At the disposal area, water is needed for dust suppression and for revegetation. Table 5.2-28 also includes the water requirements for these

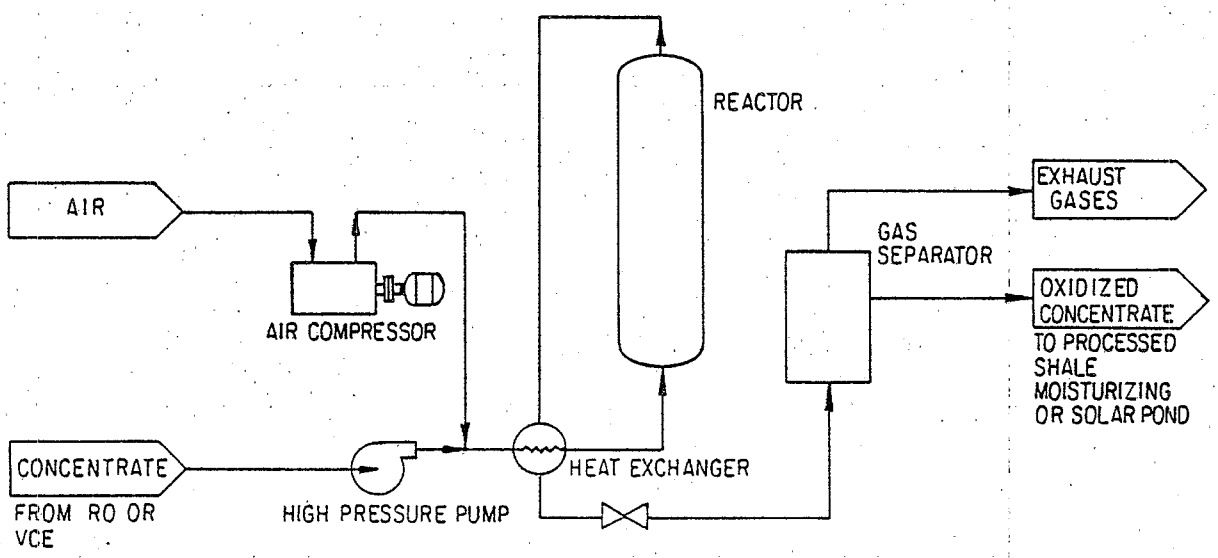

STREAM IDENTITY	CONCENTRATE	OXIDIZED CONCENTRATE	AIR	EXHAUST GAS
RO FLOW RATE:				
10^3 lb/hr	34.3	33.9	5.1	5.5
gpm	68	68		
VCE FLOW RATE:				
10^3 lb/hr	23.1	22.2	4.5	5.3
gpm	46	45		
TEMPERATURE, °F	110-150	160	AMB	160
PRESSURE, psig	AMB	AMB	AMB	AMB

SOURCE: WPA

FIGURE 5.2-21 WET AIR OXIDATION PROCESS FLOW SCHEME

TABLE 5.2-22. MATERIAL BALANCE FOR THE WET AIR OXIDATION PROCESS

Component	RO Concentrate		VCE Concentrate	
	Before Treatment Flow, lb/hr (gpm)	After Treatment[a] Flow, lb/hr (gpm)	Before Treatment Flow, lb/hr (gpm)	After Treatment[b] Flow, lb/hr (gpm)
NH_3	36	--	24	--
CO_2	--	N.D.[c]	--	N.D.
H_2S	0.5	--	0.5	--
TOC	374	37	371	37
Inorganics	6	4	6	4
H_2O	33,915 (68)	33,854 (68)	22,715 (46)	22,130 (45)
TOTAL	34,331	33,895	23,116	22,171

[a] The vent gases will contain approximately 100 lb/hr NOx, 8 lb/hr SO_2 and some water vapor.

[b] The vent gases will contain approximately 65 lb/hr NOx, 6 lb/hr SO_2 and some water vapor.

[c] N.D. = Not determined.

Source: WPA estimates based on information from Wilhelmi and Knopp, August 1979.

TABLE 5.2-23. DESIGN AND COST OF WET AIR OXIDATION OF RO AND VCE CONCENTRATE STREAMS

Item	Unit	Concentrated Feed RO	Concentrated Feed VCE
Concentrate Feed Rate	gpm	68	46
Organic Concentration: TOC	mg/l	10,750	13,900
Reactor Residence Time	hr	1	1
Reactor Pressure	psi	900	900
Oxygen Demand	lb/hr	1,160	990
Air Compressor Rating	lb/hr	5,100	4,500
Fixed Capital Cost	$\$10^3$	5,360	4,060
Direct Annual Operating Cost	$\$10^3$		
Maintenance @ 4%*		174	132
Labor, 12 hr/day @ $30/hr		118	118
Electricity @ 3¢/kW-hr		79	63
TOTAL		371	313

* Maintenance is based on the fixed capital cost less contingency.

Source: WPA estimates based on information from Wilhelmi and Knopp, August 1979.

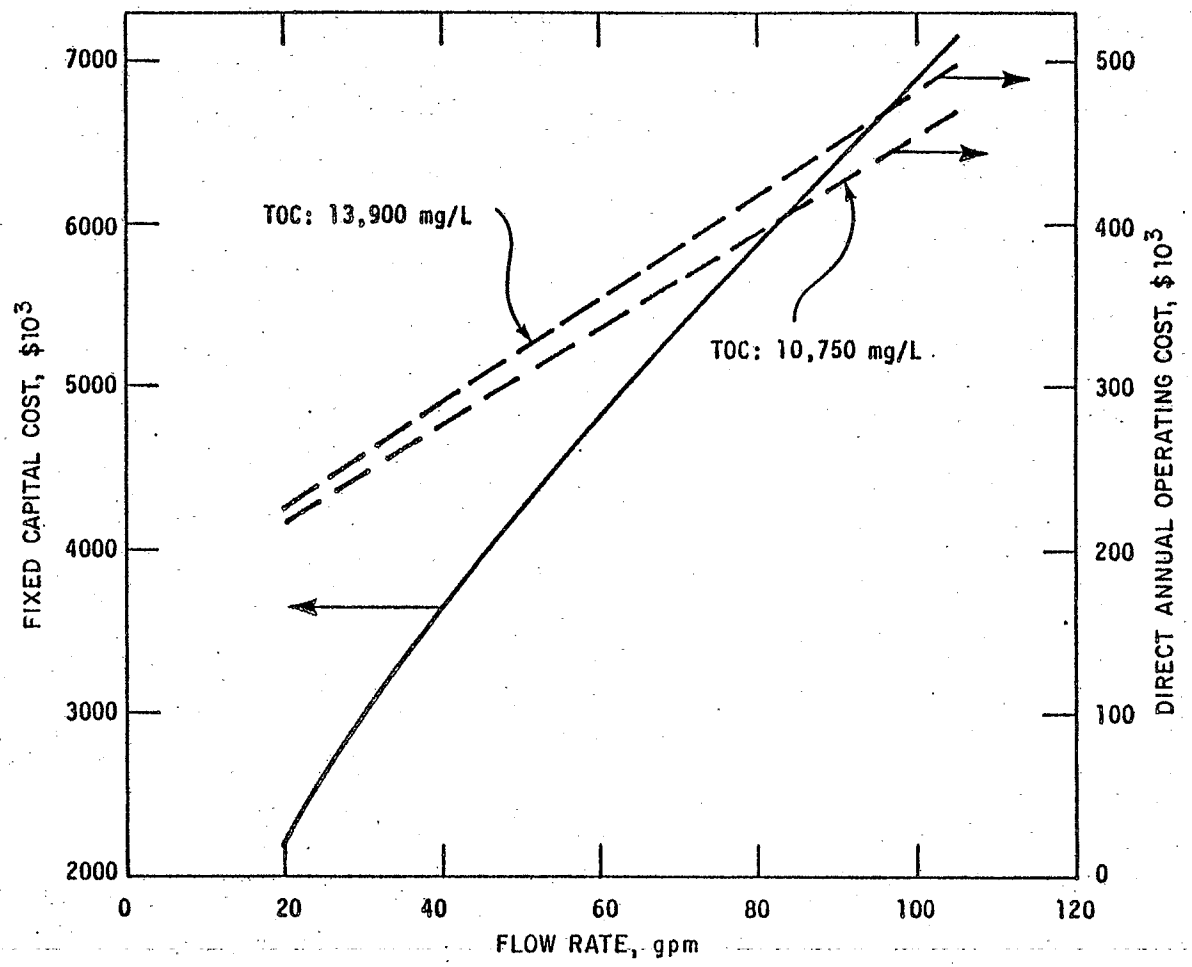

SOURCE: WPA

FIGURE 5.2-22 COST OF ORGANICS CONTROL WITH WET AIR OXIDATION

TABLE 5.2-24. STEAM PRODUCTION, USES AND BOILER FEEDWATER NEEDS

Parameter	Unit	Case Studies A	B	C
Steam Production				
Consumptive Steam Uses	gpm			
Pyrolysis		390	390	390
Steam reforming		448	448	448
Miscellaneous		282	282	282
TOTAL		1,120	1,120	1,120
Nonconsumptive Steam Uses	gpm			
Amine/Claus/Wellman-Lord		242	242	--
Stretford		--	--	38
Ammonia recovery plant		312	312	312
Foul water stripper		65	65	65
TOTAL		619	619	415
Steam Credit	gpm			
Claus		76	76	--
Ammonia recovery plant		20	20	20
TOTAL		96	96	20
Net Steam Circulated	gpm	1,643	1,643	1,515
Feedwater Makeup Requirements				
Boiler Blowdown	gpm	280	280	280
Softner Regeneration Waste	gpm	122	122	122
Consumptive Steam Uses	gpm	1,120	1,120	1,120
TOTAL FEEDWATER MAKEUP		1,522	1,522	1,522

Source: WPA estimates.

TABLE 5.2-25. WATER QUALITY PARAMETERS FOR BOILER FEEDWATER

Parameter	Low Pressure 0-300 psi	High Pressure 600-750 psi
TDS, mg/l	2,300*	1,300*
Total Alkalinity, mg/l $CaCO_3$	470*	270*
Total Hardness, mg/l $CaCO_3$	0.3	0.2
Iron, mg/l Fe	0.1	0.025
Copper, mg/l Cu	0.05	0.02
Silica, mg/l SiO_2	100*	20*
Specific Conductance, μmhos/cm	4,700*	2,700*

* For a boiler concentration factor of 1.5.

Source: WPA estimates based on data from Krisher, August 28, 1978.

TABLE 5.2-26. PLANT COOLING WATER REQUIREMENTS

Water Use	Unit	Case Studies A, B	Case Studies C
Evaporation and Drift	gpm	1,530	1,530
Stretford Cooling	gpm	--	116
TOTAL LOSSES		1,530	1,646
Blowdown	gpm	1,530	1,646
TOTAL COOLING TOWER MAKEUP		3,060	3,292
Cycles of Concentration	--	2	2

Sources: WPA estimates based on information from Colony Development Operation, 1974.

TABLE 5.2-27. WATER QUALITY PARAMETERS FOR COOLING TOWER RECIRCULATION[a]

Parameter	Limits Minimum	Limits Maximum	Remarks
Langelier Saturation Index[b]	+0.5	+1.5	Nonchromate treatment
Ryznar Stability Index	+6.5	+7.5	Nonchromate treatment
pH	6.0	8.0	
Calcium, mg/l as $CaCO_3$	20-50	300 400	Nonchromate treatment Chromate treatment
Total Iron, mg/l		0.5	
Manganese, mg/l		0.5	
Copper, mg/l		0.08	
Aluminum, mg/l		1	
Sulfide, mg/l		5	
Silica, mg/l		150 100	For pH < 7.5 For pH > 7.5
$(Ca)\cdot(SO_4)$, product		500,000	Both calcium and sulfate expressed as mg/l $CaCO_3$
TDS, mg/l		2,500	
Conductivity, micromhos/cm^3		4,000	
Suspended Solids, mg/l		100-150	
TOC mg/l		600	
NH_3 mg/l		100	
CN^- mg/l		5	

[a] Concentration in makeup obtained by dividing values above by cycles of concentration.

[b] The limits for the Langelier Saturation Index (an indication of $CaCO_3$ saturation) presume the presence of precipitation inhibitors in nonchromate treatment programs. In the absence of such additives, the limits would be reduced to 0 and 0.5.

Source: WPA estimates based on data from Hart, June 11, 1973.

TABLE 5.2-28. WATER REQUIREMENTS FOR PROCESSED SHALE DISPOSAL AND DUST CONTROL

Water Use	Water Required Mass % of Shale	Shale Rate 10^3 lb/hr	Water Rate gpm
Processed Shale Disposal			
Quenching and Moistening	18.2	4,514*	1,640
Processed Shale Dust Control	2.9	4,514	260
Revegetation	4.1	4,514	370
Raw Shale Dust Control			
At Mine	3.2	5,465	367
Crushing	1.4	5,465	153
At Plant	1.0	5,465	110

* Dry processed shale rate.

Source: WPA estimates.

needs. The water required for dust control is 2.9 mass percent of the dry processed shale rate, and the requirement for revegetation is 4.1 mass percent. Any water used in revegetation at the disposal area should be of a quality acceptable for agricultural use.

Dust Control--

The water requirements for mining, crushing, and fugitive dust control are also summarized in Table 5.2-28. These requirements are given as flow rates (gpm), as well as mass percents of the raw shale rate. The mass percents are 3.2%, 1.4%, and 1.0% for mining, crushing, and fugitive dust control, respectively.

Water used in confined mining operations should be low in volatile or toxic materials because mining personnel will be directly exposed to it. Also, the water should contain low amounts of suspended and dissolved solids to reduce clogging and scaling in spray nozzles. The water used in mining, crushing, and fugitive dust control operations cannot be recovered.

Miscellaneous Requirements--

These include potable and sanitary needs, as well as service and fire water requirements. Table 5.2-29 summarizes these water requirements in terms of makeup, discharge and overall water consumption. Any treatment necessary for these waters is standard practice and not a pollution control activity and, therefore, is not discussed in depth.

TABLE 5.2-29. POTABLE AND SERVICE WATER REQUIREMENTS

Water Use	Usage gal/Man-Shift	Consumption %	Employees No.	Makeup gpm	Discharge gpm
Sanitary/Potable					
At Plant	33	28	800	12	8
At Mine	33	28	500	8	6
Service/Firewater					
At Plant	66	33	800	24	16
At Mine	50	100	500	12	--

Source: WPA estimates.

5.3 SOLID WASTE MANAGEMENT

The TOSCO II processing facility will be a source of large quantities of plant wastes which will require disposal. Table 5.3-1 indicates the makeup of the waste material that will be discarded from the plant over a period of 20 years (project life). Sections 3 and 4 give information about the origin and composition of these streams.

The waste material disposal approach and the practices used in the disposal can have a long-lasting impact on the atmosphere and hydrology of the area as well as on the local aesthetics and habitat. The primary areas of environmental concern in this regard are:

- Surface Hydrology
- Subsurface Hydrology
- Surface Stabilization
- Hazardous Wastes.

This section briefly describes the disposal approaches that may be applicable to the wastes produced from an aboveground retorting facility (e.g., TOSCO II) involving underground mining of the oil shale. In addition, a discussion of control technologies available to mitigate the potential impacts in the areas mentioned above is presented. The applicability of these technologies should be determined on a site-specific, case-by-case basis. Specific information for the facilities involving open pit mining and aboveground retorting can be found in the Lurgi-Open Pit PCTM, while specific information for the combined Modified In Situ-aboveground retorting operations can be found in the MIS-Lurgi PCTM.

5.3.1 Disposal Approaches

The following discussion applies to the basic methods for handling solid wastes produced by the TOSCO II process. Generally, the mining method, geography and hydrology of the area, and the waste characteristics influence the applicability of a disposal approach. The key features of each approach are summarized in Table 5.3-2. A discussion of the control technologies applicable to these disposal alternatives is presented later in this section.

Landfills--

A landfill basically entails placing the waste material as a compacted fill in a suitable location. The wastes from the processing facility are transported to the disposal site by conveyors or trucks and then hauled to the active portion of the landfill. Usually, the solids are laid down in lifts of 9-18 inches and compacted to a suitable in-place density. The compacted fill may be built with a proper slope to a vertical height of 40-50 feet and then flattened, or benched, to provide a passageway for the disposal equipment and to facilitate runoff collection. The overall landfill can be constructed gradually in this fashion, using a multiple-bench arrangement.

TABLE 5.3-1. MAJOR WASTES PRODUCED OVER A PERIOD OF 20 YEARS

Stream Number	Stream Description	Quantity, 10^6 tons	Material Quantity as a Percent of Total Waste Quantity
12	Raw Shale Runoff and Leachate	N.D.*	N.D.
21	Raw Shale Sludge - Preheat System	11.31	2.27
22	Processed Shale Sludge - Ball Elutriator	0.85	0.17
23	Processed Shale Sludge - Moisturizer	0.57	0.11
27	Processed Shale	350.84	70.43
38	Stripped Foul Water	18.49	3.71
86	Compression Condensate - Wellman-Lord Unit	1.73	0.35
103	Coke	5.26	1.06
133	Stripped Sour Water Purge Stream	0.75	0.15
148	Revegetation Water	14.59	2.93
149	Dust Suppression Water	9.70	1.95
168	Boiler Blowdown	11.04	2.22
169	Boiler Feedwater Treatment Concentrate	4.81	0.97
175	Cooling Tower Blowdown	60.31	12.11
177	Storm Runoff	4.34	0.87
178	Processed Shale Leachate	N.D.	N.D.
94, 109, 122	Spent Catalysts	0.005	0.001
--	Treated Sanitary Water	0.55	0.11
--	Sanitary Water Treatment Sludge	N.D.	N.D.
--	Service and Fire Water Runoff	0.63	0.13
--	Source Water Clarifier Sludge	2.37	0.48
--	Trash, Construction Debris, etc.	N.D.	N.D.
TOTAL		498.15	99.93

* N.D. = Not determined.

Source: DRI estimates based on information from Colony Development Operation, 1974, and U.S. DOI, 1977.

TABLE 5.3-2. KEY FEATURES OF SOLID WASTE DISPOSAL APPROACHES

Disposal Approach	Principle	Advantages	Disadvantages
Landfills	Place wastes as fill in a convenient surface location and isolate from the surrounding environment.	Relatively simple placement and isolation of wastes. Does not interfere with production.	Dust and erosion control and reclamation/revegetation are relatively labor-intensive operations. Occupies a significant amount of land surface.
Underground Mine Backfill	Place wastes as fill in the inactive parts of the mine.	Decreases subsidence and size of necessary surface landfill. No additional maintenance or reclamation work is required. May enhance total resource recovery.	Difficult to isolate the wastes from the surrounding environment. Placement is relatively difficult, complex, and interferes with production.
Hazardous Waste Lagoon	Place hazardous wastes in a lined pond and isolate them.	The oil shale developer can maintain absolute control over the waste disposition.	Design, construction, and reclamation may be complex. Requires a relatively level site.

Source: SWEC.

Depending upon the geography of the disposal site, the landfill may be built on a level or nearly level surface, in the head of a valley, or across a valley. The applicable control technologies will vary somewhat with site topography but still will be designed to protect the surface and subsurface waters. Applicable control technologies include runon and runoff catchment ponds, embankments and diversion systems, liners and covers, and revegetation. Provision for structural stability of the fill is also a major consideration.

A surface landfill of some type will need to be included in most oil shale developments. This results from the shale undergoing a volume expansion upon mining, crushing, and processing, which precludes all of the shale being returned to the mine.

The head-of-valley disposal approach for the TOSCO II processing wastes has been proposed by the Colony Development Operation (March 1980) and a permit has been granted by the Colorado Mined Land Reclamation Board (October 23, 1980). A description of the permitted landfill design is presented in Section 3 of this manual.

Underground Mine Backfill--

In this disposal approach, the waste material is placed in the inactive portion of the underground mine (e.g., a room-and-pillar mine), while production continues in other parts of the mine. This approach is attractive from several viewpoints. By returning the wastes to the mine, the size of a surface landfill would be greatly reduced. The potential for mine subsidence would be diminished, and revegetation would not be necessary. Backfilling the mine may enhance resource recovery by increasing the amount of shale that can be mined safely. Disadvantages include possible release of volatiles underground in the workplace and possible groundwater contamination.

The major considerations in backfilling involve developing logistics for carrying out simultaneous mining and disposal operations while providing protection for workers and the groundwater. For fine processed shales, like the TOSCO II, hydraulic or slurry backfilling may be practical. However, additional water, above the moistening needs, would be required and a drainage collection system would be needed. The wastes may be transported to the mine by conveyors or trucks, then compacted in place, but the space limitations reduce the practicability of this approach. Alternatively, the wastes may be backfilled pneumatically, but this approach may be difficult to implement at the scale required.

A study on the above backfilling techniques has been conducted for the wastes from the Colony project (Dravo Corp., 1975). The results indicate that, while theoretically 80% of the wastes could be returned to the mine, only 60% of the wastes can actually be placed in the mine during the project life due to a time lag of 5-10 years between the mining and backfilling operations. It was also concluded that none of the placement techniques were developed sufficiently to be applied on a large scale.

Hazardous Waste Lagoon--

A hazardous waste lagoon would be a permitted facility either on the project site or off site. It would likely consist of a lined pond designed to be suitable for the containment of hazardous wastes. The major considerations in the design of such a pond would include a runon diversion system, an embankment, one or two impervious bottom liners with a drained sand layer below or between them, a slurry wall beneath the embankment, a surface seal layer, and provisions for reclamation and revegetation (U.S. EPA, September 1980).

Once the lagoon is filled to its capacity, wick drains could be installed to facilitate evaporation, allowing quicker consolidation of the sludge. Gravel could also be added to aid consolidation. An impermeable surface seal may then be added on top and joined with the bottom liner to isolate the wastes from the surrounding environment. The final aspects would include placing subsoil and topsoil over the seal, followed by revegetation of the surface.

5.3.2 Surface Hydrology Control Technologies

Solid waste management practices in the area of surface hydrology entail the handling of surface waters on and around the disposal facility. Specifically, surface streams and precipitation are prevented from running onto the waste pile and contaminated waters (runoff, leachate) are kept from mixing with the natural waters.

The technologies discussed below are those that are applicable to a surface landfill, and they are summarized in Figure 5.3-1. The key features of the technologies are highlighted in Table 5.3-3 and a more detailed description with cost data is presented in the text.

Runon Diversion System--

A runon diversion system will generally be needed with any surface landfill to prevent surface water from flowing onto the waste material and becoming contaminated or causing erosion. The system may include ditches, lined channels, conduits, and embankments arranged to direct the flow of surface water around or away from the waste material, and energy dissipators to moderate the impact of the flow.

The complexity and extent of the system will vary widely based on the amount of water to be diverted and the arrangement of the site. For a fill on a relatively level site, runon diversion may require only a system of channels and small embankments to deflect surface flow away from the landfill. In the case of a head-of-valley fill or a cross-valley fill, runon diversion might include an embankment dam to retain peak flows from the design storm until they can be passed through a conduit beneath or around the fill. Alternatively, the system may consist of a conduit or channel large enough to pass the design flow without an embankment (without retention).

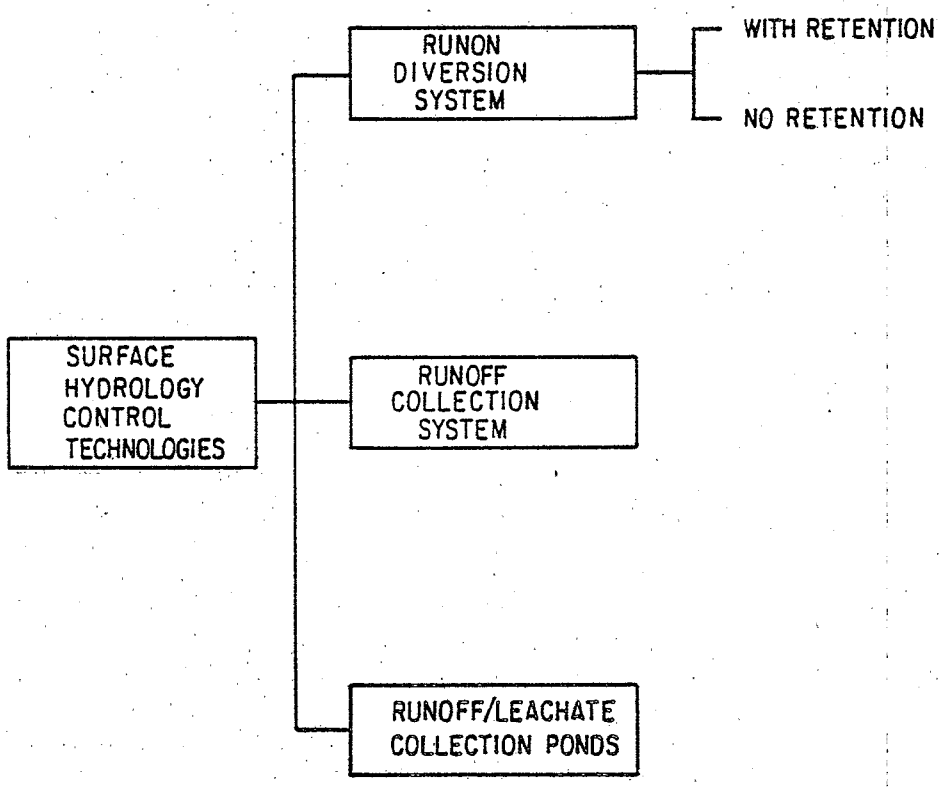

SOURCE: SWEC

FIGURE 5.3-1 SURFACE HYDROLOGY CONTROL TECHNOLOGIES

TABLE 5.3-3. KEY FEATURES OF SURFACE HYDROLOGY CONTROL TECHNOLOGIES

Control Technology	Principle	Purpose	Comments
Runon Diversion System	Uses channels and embankments to prevent surface water from contacting the waste material.	Reduces erosion and increases site stability. Reduces the amount of water contacting the waste material, thereby reducing the potential for surface water pollution.	Reduces the amount of water contaminated, thereby reducing treatment costs.
With Retention	Embankment dam holds peak flows for controlled release, evaporation, or percolation into the ground.		Requirements for the channel or conduit are greatly reduced. Provides flexibility in the use of the collected water.
No Retention	Channel or conduit is sized to convey peak flow with no retention of water.		Eliminates the need for runon retention structures and associated maintenance. More expensive than using an embankment for retention and controlled discharge of the peak flow.
Runoff Collection System	Drained benches collect and remove precipitation falling on the disposal site.	Reduces erosion of fill and infiltration into fill. Collects water for reuse or discharge.	Decreases erosion and infiltration. Requires maintenance.
Runoff/Leachate Collection Ponds	Lined ponds are used to retain leachate and runoff.	Prevents release of contaminated waters.	Collects water for reuse, treatment and discharge.

Source: SWEC.

The costs for three runon diversion systems were estimated and they are plotted in Figure 5.3-2. Examples 1 and 2 consisted of runon retention in combination with continuous controlled release. Example 3 was designed for no retention, which necessitated a large channel and extensive use of reinforced concrete energy dissipators; the higher cost associated with such a system is illustrated in the figure.

Examples 1 and 2 also consisted of an earth embankment for the retention of runon and an embedded conduit for controlled release. Channeling of the controlled release flow around the waste pile in Example 1 was accomplished with a lined canal, while Example 2 utilized an extension of the embedded conduit for the controlled release.

The cost of a runon diversion system will be influenced by: the size of the drainage area and topography which affect the runon rates, retentions, and embankment material quantities; the size, length, and complexity of controlled release structures and channeling systems; and the need for and extent of energy dissipators and/or drop structures. For example, the runon from a site with a large drainage area in a gently sloping topography could be diverted quite efficiently by an unlined canal or channel; another site with small runoff rates, but highly erodible steep topography, may necessitate cost-intensive lined channels, flumes or conduits, as well as drop structures or energy dissipators. In summary, the cost of this system is highly site-specific.

Runoff Collection System--

A runoff collection system usually consists of a system of channels, ditches, and conduits arranged to prevent the surface water that has contacted the waste material from leaving the site. Another purpose of this system is to drain the surface water from the wastes to limit the erosion and infiltration potential. Collected water may also be used to meet process needs.

The basic elements of this system are backsloped benches on the face of the landfill and a means of collecting the water from the fill surface. Generally, half-round pipes, impervious membranes, or highly compacted soil or wastes are used to line ditches which collect the runoff from the bench and the segment of the landfill slope above it, as shown in Figures 5.3-3 and 5.3-4. The ditches empty into central conduits leading to a containment/evaporation pond at the toe of the landfill. On larger piles or in areas with extensive rainfalls, small embankments on the crest of the landfill or on the benches might be used to retain the runoff and thus limit the peak flows into the rest of the drainage system.

A problem with limiting the peak flows using embankments on the waste pile is that the water ponded on the landfill will have a greater tendency to infiltrate the waste material. This increased infiltration could have a detrimental effect on the stability of the slope and will somewhat increase the amount of water which must be handled by the leachate collection system (discussed under subsurface hydrology).

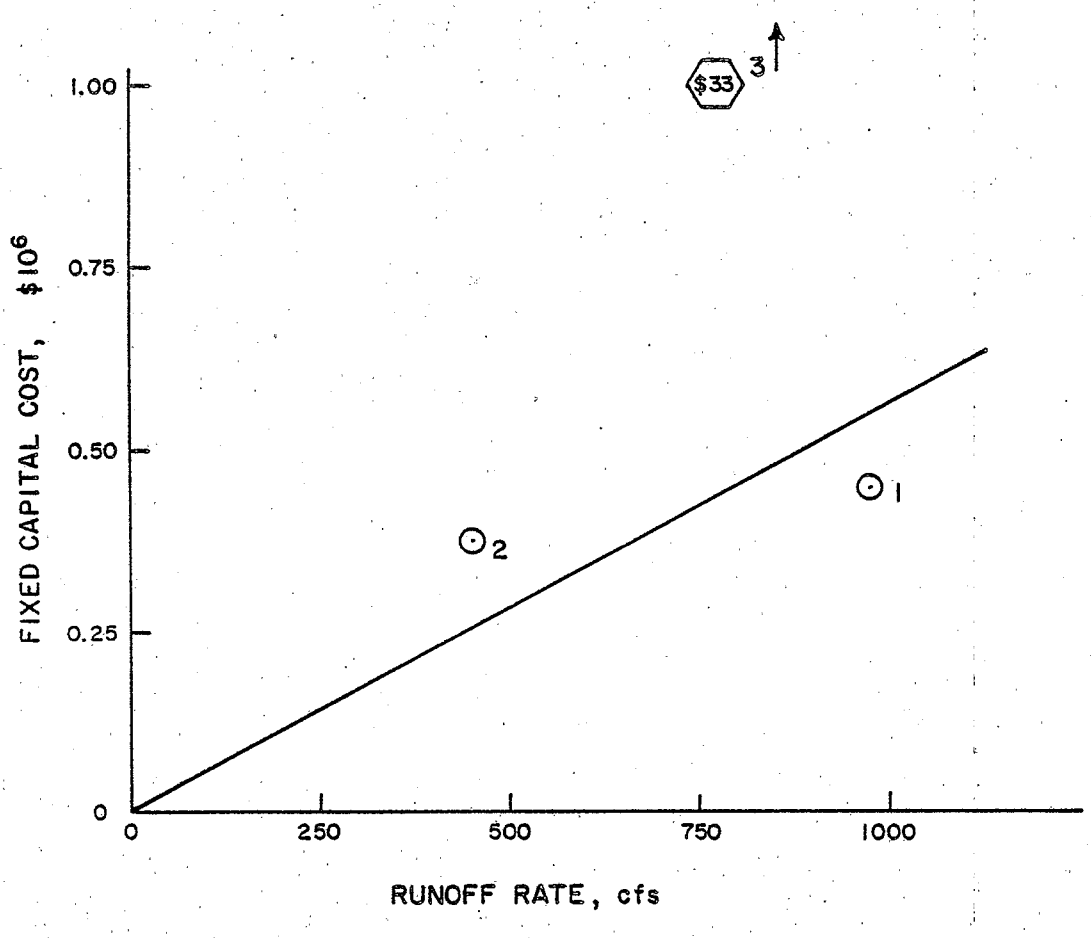

NOTES:

Examples 1 & 2 include retention with embankments and continuous controlled release through an embedded conduit.

Example 3 was designed to handle the maximum flow without retention.

Example 2 is specific to the TOSCO II case studies, except the embankment dam is smaller than the one proposed by Colony.

See Section 6.2.3 for details on the solid waste management cost methodology.

SOURCE: SWEC

FIGURE 5.3-2 RUNON DIVERSION COSTS

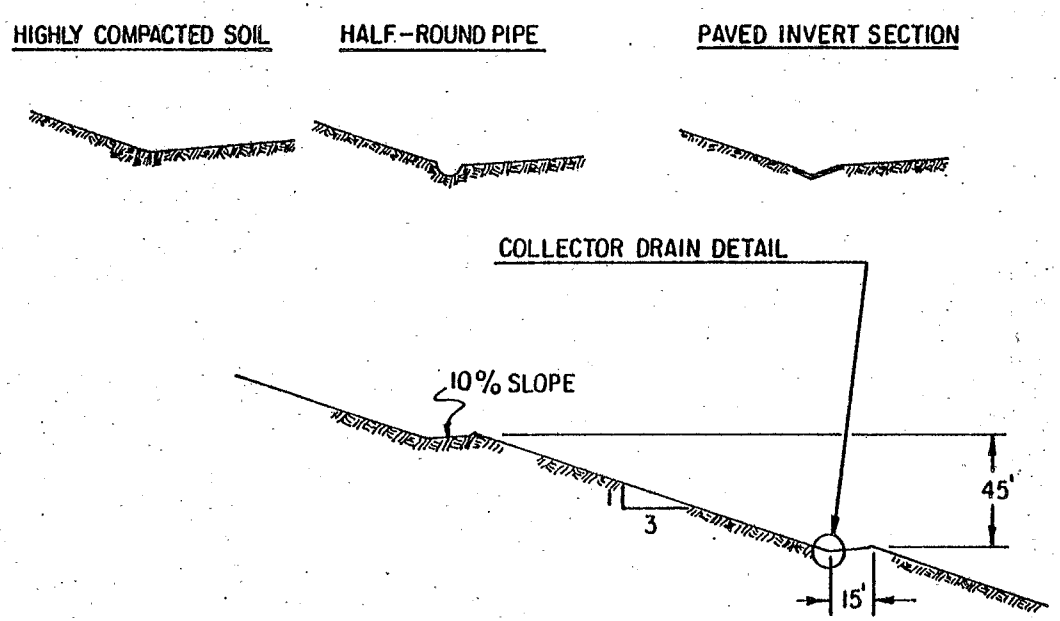

SOURCE: SWEC based on Colony Development Operation, March 1980

FIGURE 5.3-3 TYPICAL RUNOFF COLLECTION SYSTEMS

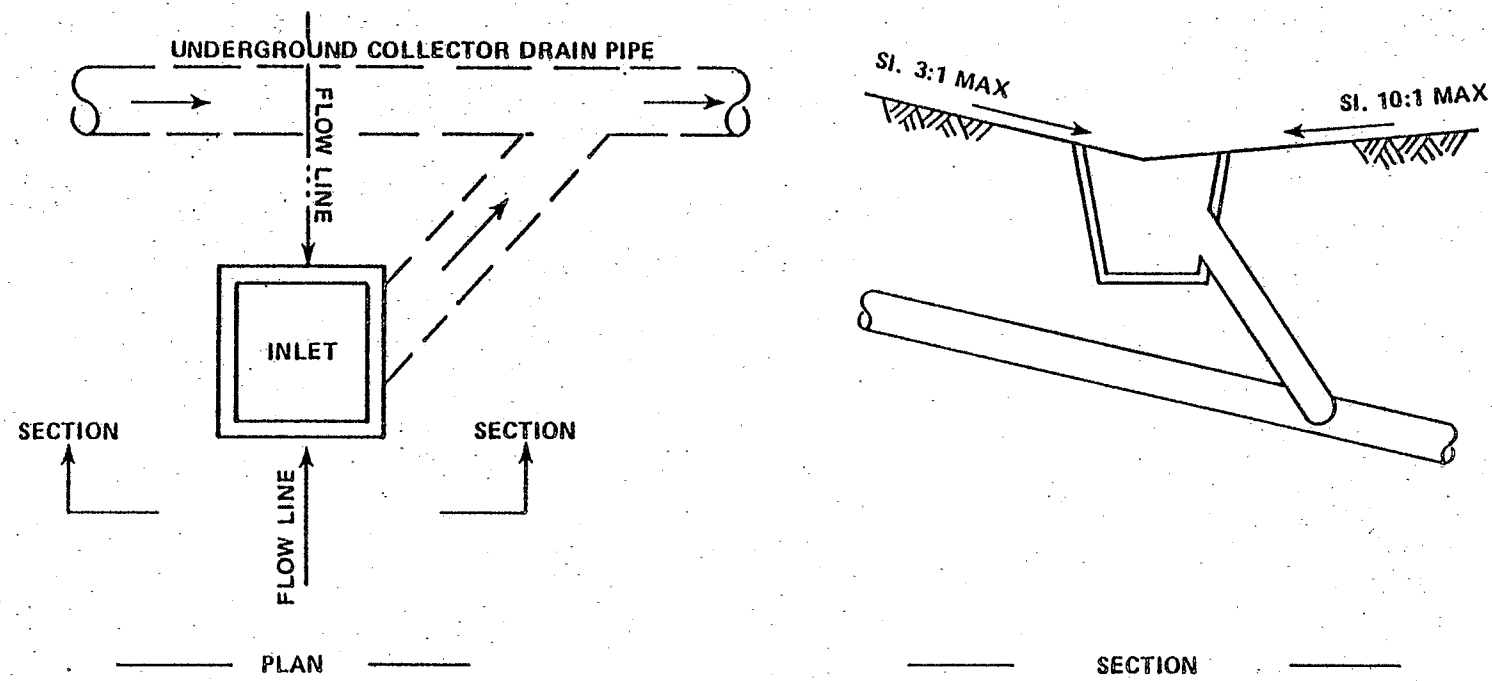

SOURCE: SWEC based on Colony Development Operation, March 1980

FIGURE 5.3-4 RUNOFF COLLECTION AND CHANNELING

The costs for a variety of runoff collection system designs were estimated and these are plotted in Figure 5.3-5. Example 1 used shaped benches with unlined ditches for lateral conveyance and concrete weir collectors and corrugated metal pipe with energy dissipators for vertical conveyance. It also incorporated some temporary retention of runoff on the waste pile surface, which reduced the necessary capacity and cost of the vertical conveyance portion of the system. Example 2 used split corrugated metal pipe to line the collection ditches to facilitate lateral conveyance, and concrete weir collectors and corrugated metal pipe with energy dissipators for vertical conveyance. Example 3 used the lined ditches for lateral conveyance, with a concrete flume and a stilling basin for vertical conveyance.

The cost data, as can be seen in the plot, are highly dependent on the particular design, and no single cost curve relationship can be drawn through the data points. Example 1, which assumes a more modest design, defines the lower boundary of the cost envelope, and Example 3 defines the high end of the cost envelope.

Runoff/Leachate Collection Ponds--

At the outlet of the collection system for surface runoff, a structure is needed to contain the collected water for reuse, treatment and discharge, or for evaporation. The structure would consist of an embankment across a former stream channel to form a pond, and the pond may be lined or unlined depending upon the nature of the impounded material. If a liner is needed, it would be protected from wave action, as necessary, using rip-rap, a sand layer, soil cement or similar materials. Since the pond would be located at the base of the landfill, it might also be used to collect the leachate from the fill.

Cost data for four examples of runoff/leachate collection ponds are presented in Figures 5.3-6 and 5.3-7. Figure 5.3-6 presents the total cost of the embankment and liner as a function of the construction material quantities used in each case, while Figure 5.3-7 isolates the cost of the liner as a function of the liner material quantity only. Examples 1, 2 and 3 utilized compacted processed shale as the liner, while Example 4 used Mancos Shale as the liner. The relatively high cost of using an off-tract material (Example 4) is evident in the figures. The cost increase is incurred due to the source development, processing and hauling of Mancos Shale. Slight cost differences may be observed between similar systems, and these can be attributed to site-specific features, such as the arrangement and configuration of the embankments and ponds.

5.3.3 Subsurface Hydrology Control Technologies

The technologies and practices in the area of subsurface hydrology involve the handling of groundwater seepage under a landfill to prevent infiltration of the pile and the control of water from the pile to prevent contamination of the groundwater. The technologies, as summarized in Figure 5.3-8, are applicable to a surface landfill, and their key features

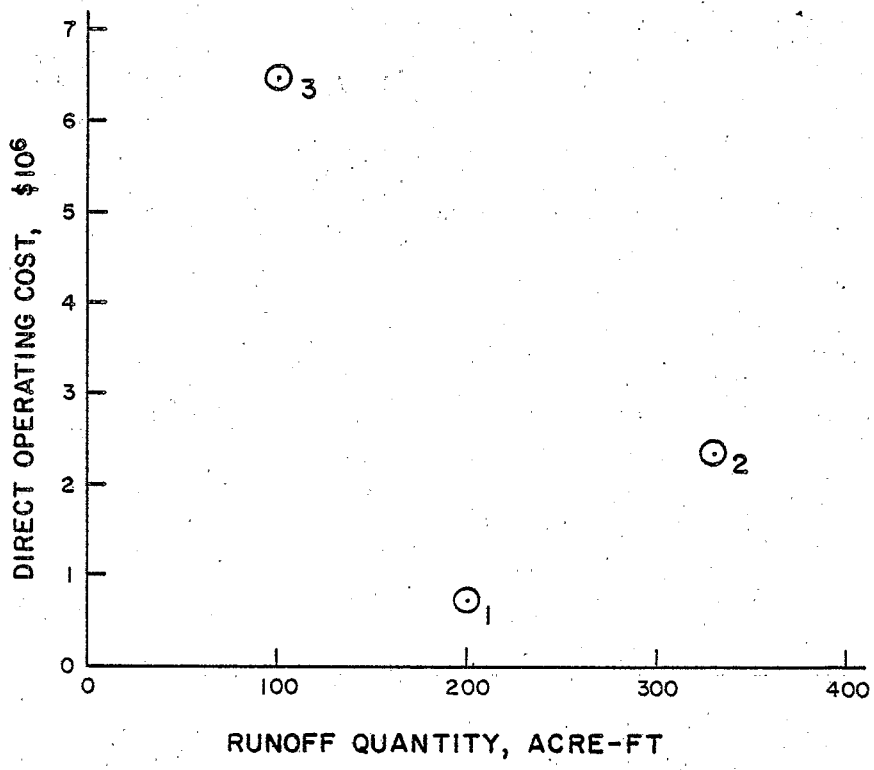

NOTES:

Example 1 utilizes shaped benches as unlined ditches for lateral runoff conveyance.

Examples 2 & 3 utilize split corrugated metal pipe to line ditches for lateral runoff conveyance.

Examples 1 & 2 utilize buried corrugated metal pipe and energy dissipators for vertical runoff conveyance.

Example 3 utilizes a concrete flume with stilling basin for vertical runoff conveyance.

Example 2 is specific to the TOSCO II case studies, except that Colony has proposed lined ditches for vertical conveyance.

The costs indicated are cumulative for the project life.

See Section 6.2.3 for details on the solid waste management cost methodology.

SOURCE: SWEC

FIGURE 5.3-5 RUNOFF COLLECTION COSTS

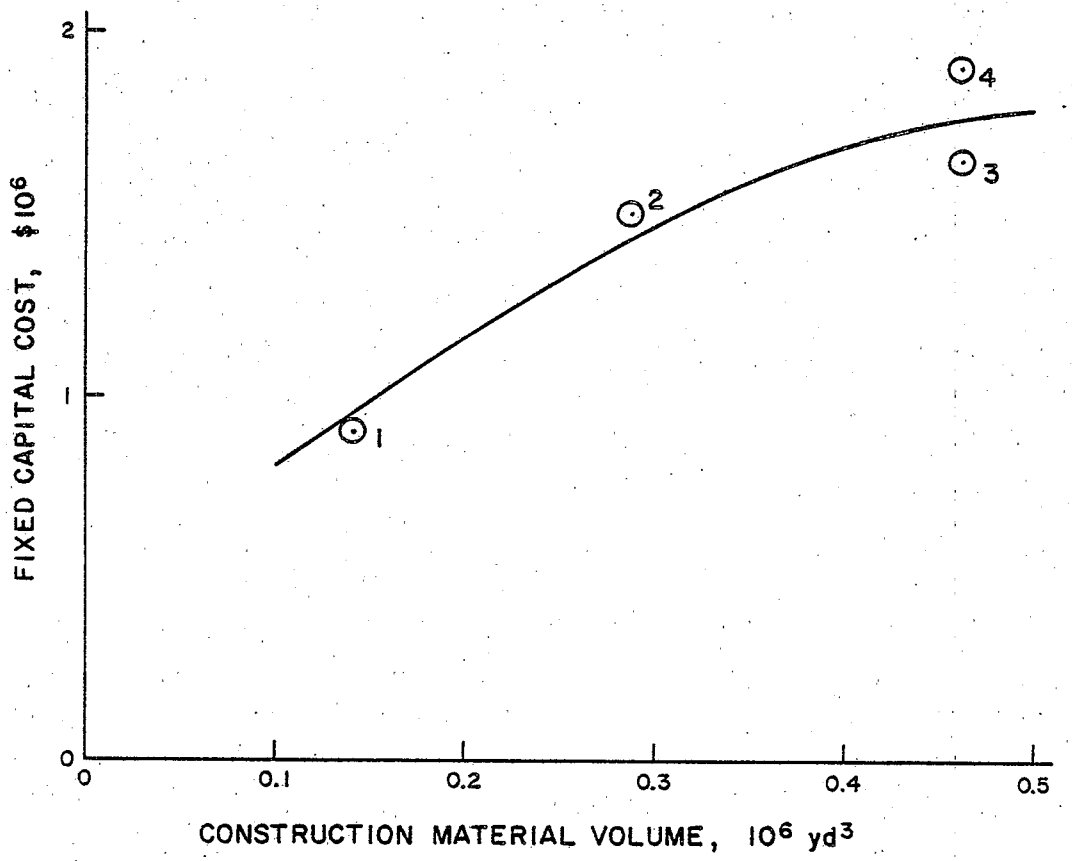

NOTES:

All Examples include cost of embankments and pond liners.

Examples 1, 2 & 3 include pond liners constructed of processed shale.

Example 4 includes a liner constructed of Mancos Shale (off-tract material); cost is increased due to processing and transport.

Example 2 is specific to the TOSCO II case studies, except no liner is mentioned in the Colony proposal.

See Section 6.2.3 for details on the solid waste management cost methodology.

SOURCE: SWEC

FIGURE 5.3-6 RUNOFF/LEACHATE POND COSTS

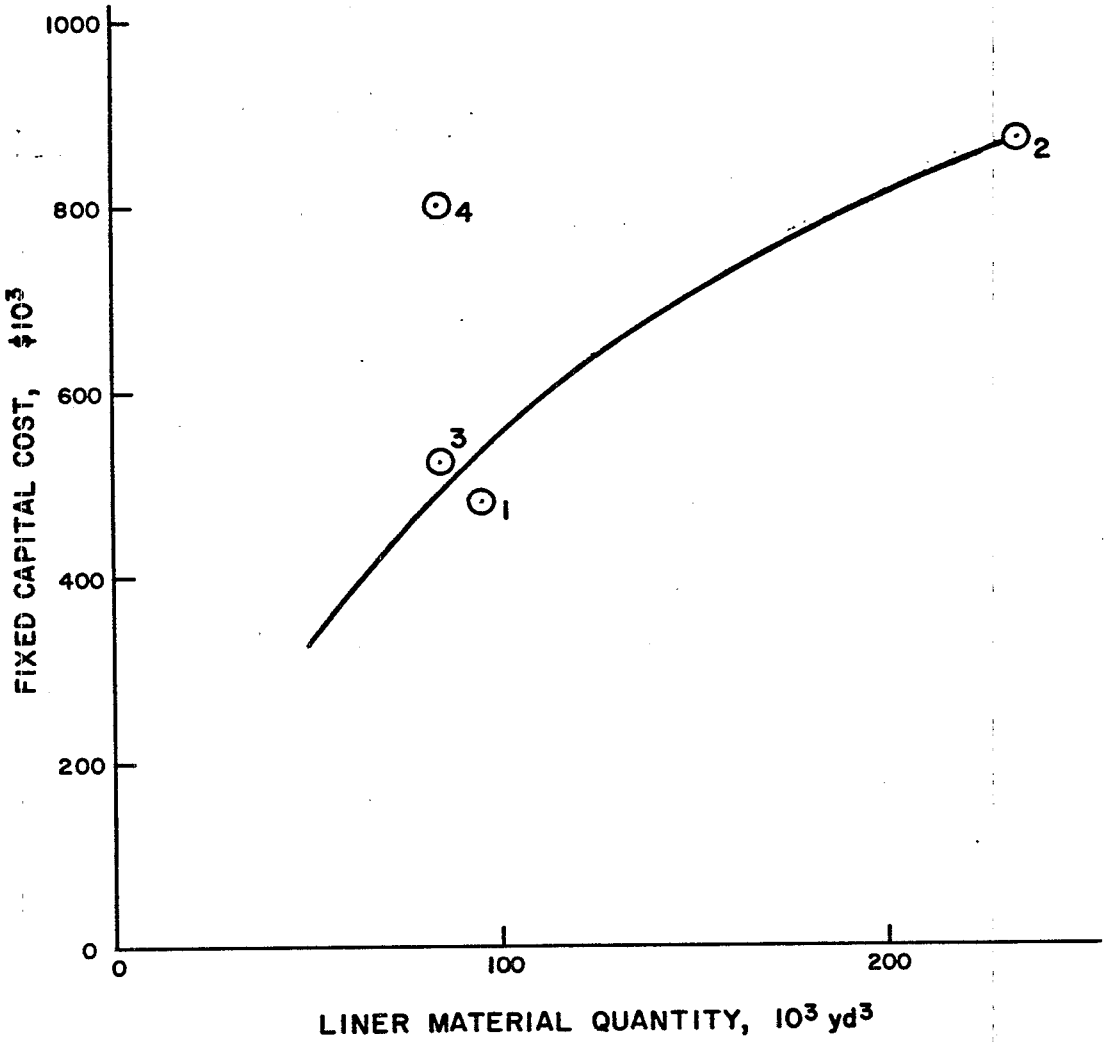

NOTES:

Examples 1, 2 & 3 include liners constructed of processed shale.

Example 4 includes a liner constructed of Mancos Shale (off-tract material); cost is increased due to processing and transport.

Example 2 is specific to the TOSCO II case studies, except no liner is mentioned in the Colony proposal.

See Section 6.2.3 for details on the solid waste management cost methodology.

SOURCE: SWEC

FIGURE 5.3-7 RUNOFF/LEACHATE POND LINER COSTS

are presented in Table 5.3-4. Detailed descriptions of the technologies, along with cost information, are presented below.

Liners and Covers--

A liner is essentially a material with low water permeability that is installed at the bottom of a landfill or pond. Its purpose is to prevent the contaminated waters from the wastes from mixing with the groundwater. It also prevents groundwater from infiltrating the bottom of the landfill.

A cover is also made up of a low-permeability material and it is used as a surface sealer for the landfill. It prevents the runoff from infiltrating the pile, thereby reducing the quantity of the leachate and minimizing stability problems.

There are several materials which can be considered for the liners and covers. Probably the least expensive material would be compacted processed shale. It has the advantage of being readily available at the site. A similar lining could be made of processed shale or clay from off site if the quality of the processed shale from the site is unsuitable; however, these options would be relatively expensive due to the extra handling and hauling costs. There is also a variety of synthetic liners which could be considered. High-density polyethylene, for example, would range upward from a price similar to that for the off-site materials, depending upon the thickness used. This would make it very expensive for use in a processed shale landfill and it may have questionable long-term durability. Another option that could be considered, particularly for a hazardous waste lagoon, is simply a combination of a synthetic liner with one of the other liners mentioned above.

Linings made of natural materials will dry and crack if they are left exposed to the weathering elements for long periods. Therefore, if a pond is not expected to remain at a relatively consistent level, a synthetic liner might be considered. Hazardous waste lagoons sometimes have double liners; however, the catchment and evaporation ponds presumably will need only one liner or no liner since they will not contain hazardous materials. If a combination of two liners is used, the synthetic liner may be placed above the natural material liner to prevent its drying and cracking. In cases where a synthetic liner is used, it should be covered by a layer of sand or gravel to protect it from traffic and wave action. Also, because of the weight of the fill and because the fill may be placed above an underground mine, the liner must accommodate a certain amount of subsidence and stretching and still function properly.

The cost of liners and covers depends on the quantity and type of material used. Figure 5.3-9 presents the costs for three separate liner and cover systems. Examples 1 and 2 assumed the use of highly compacted processed shale for construction of the liners, while Example 3 assumed the use of Mancos Shale. The compacted processed shale represents the lowest material cost option, while Mancos Shale is a more expensive natural material since it has associated source development, processing and hauling costs. The cost curve in the figure may be used to obtain an "order-of-magnitude"

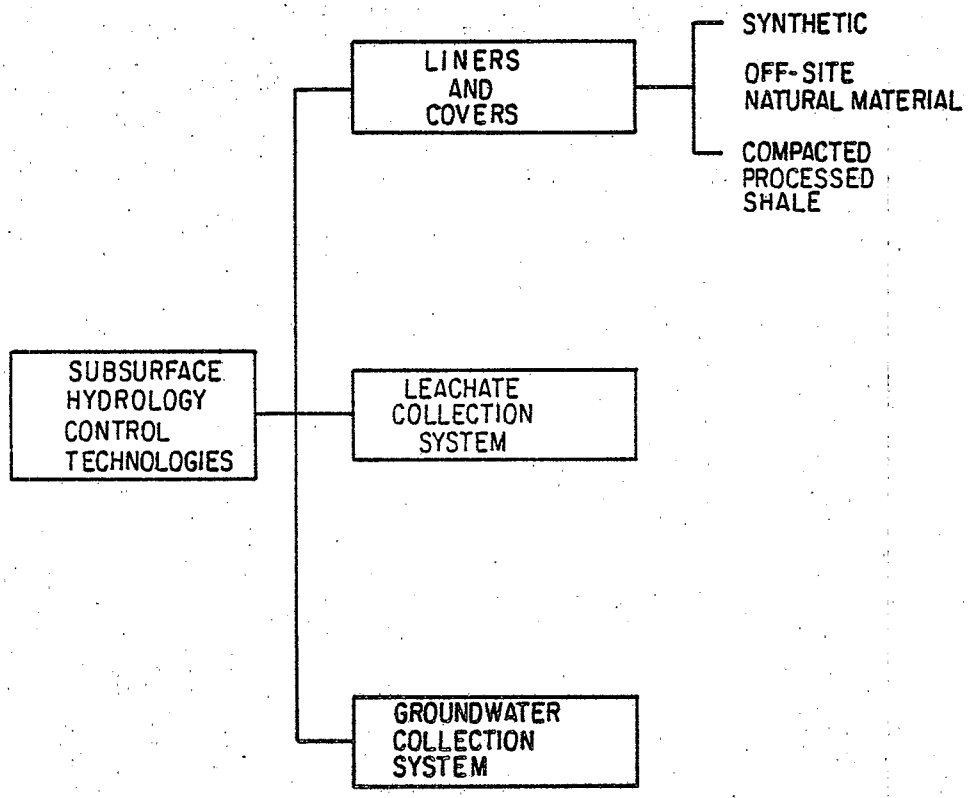

SOURCE: SWEC

FIGURE 5.3-8 SUBSURFACE HYDROLOGY CONTROL TECHNOLOGIES

TABLE 5.3-4. KEY FEATURES OF SUBSURFACE HYDROLOGY CONTROL TECHNOLOGIES

Control Technology	Principle	Purpose	Comments
Liners and Covers	Low permeability layer severely restricts seepage.	Reduce formation of leachate. Prevent contamination of the groundwater by leachate from the fill. Prevent groundwater invasion of the fill, which might produce instability and additional leachate.	
Synthetic			Provide the lowest permeability but have the highest cost. Long-term durability is questionable.
Off-site Natural Material			High cost. Advantage is long-term durability.
Compacted Processed Shale			Lowest cost. Small particles may infiltrate adjacent drains. Advantage is long-term durability.
Leachate Collection System	Collects leachate at the base of the landfill and drains into the pond.	Reduces groundwater contamination by effectively removing the leachate. Prevents loss of fill stability due to saturation.	Collected water may be used for process needs.
Groundwater Collection System	Collects groundwater seepage beneath the landfill and drain.	Prevents loss of fill stability due to buildup of groundwater pressure beneath the liner.	Collected water may be used for process needs.

Source: SWEC.

estimate of liner cost utilizing highly compacted processed shale as the construction material. The estimated cost for other liner materials would fall above this curve to a degree which is dependent on the source development, processing, and hauling costs associated with delivering these materials to the disposal site.

Leachate Collection System--

The purpose of a leachate collection system is to collect water which infiltrates a landfill and drain it efficiently in order to prevent the saturation of the landfill and contamination of groundwater beneath the waste pile, as well as to facilitate handling of the leachate.

Leachate collection systems typically consist of blankets, or zones, of highly pervious sand and gravel. In some cases this is augmented with embedded perforated pipe to increase the capacity, and it may also include collector ditches where the system emerges onto a broad level area. The sand or gravel layer would be located just above the bottom liner and it may be wrapped in filter fabric or surrounded by carefully graded sand filters to prevent infiltration by the processed shale particles. In either case, the collection system should be designed so that movement and settlement do not result in discontinuity of the gravel layer or impede drainage to the collection or evaporation ponds.

The costs for four distinct leachate collection systems were estimated and these are presented in Figure 5.3-10. In Examples 1 and 2, due to the valley shape of the disposal site, only the drain material was necessary for the collection system. The leachate in these two cases was drained in the runoff/leachate collection pond located downstream from the landfill. In Example 3, a toe ditch was necessary to collect the leachate due to the presence of the broad valley area at the toe of the landfill. The ditch was then drained into the common runoff/leachate collection pond. Example 4 also required a toe ditch which was drained into a leachate collection pond, while the runoff was impounded separately in evaporation ponds on the waste pile surface. Examples 3 and 4 required the same drainage material quantity. The cost difference between the two examples is due to the inclusion of a separate collection pond in Example 4. Data point 5 on the figure represents the cost of drainage material only for Examples 3 and 4. The cost of the toe ditch may be obtained by subtracting data point 5 from 4.

The costs for similar systems should be proportional to the volume of drainage material used, but slight deviations may be encountered due to the site-specific conditions.

Groundwater Collection System--

The purpose of a groundwater collection system is to relieve pressure from the seeps and springs beneath a landfill. This situation is most likely in the cases of cross-valley or head-of-valley landfills. The system will be essentially identical to the leachate collection system except it would be below the bottom liner rather than above it.

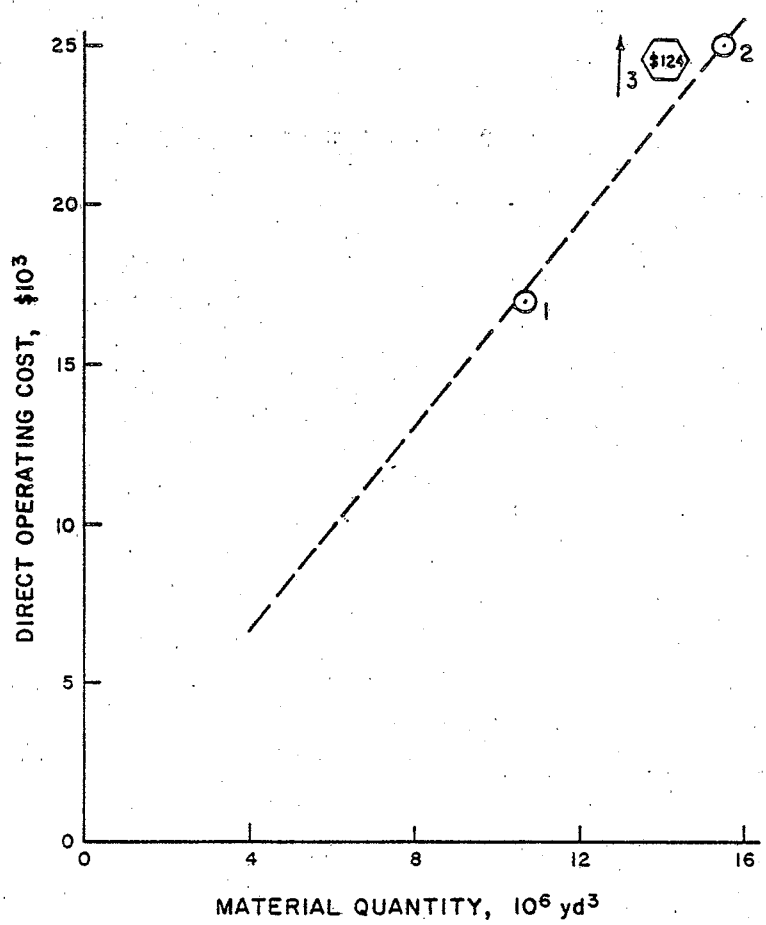

NOTES:

Examples 1 & 2 utilize 3 feet of highly compacted processed shale for liner material.

Example 3 utilizes 3 feet of compacted Mancos Shale (off-tract material) for liner material; cost of processing and hauling this material makes this option more expensive than the others.

Example 1 is specific to the TOSCO II case studies, except the Colony proposal includes only a 2-foot, rather than 3-foot, thickness.

The costs indicated are cumulative for the project life.

See Section 6.2.3 for details on the solid waste management cost methodology.

SOURCE: SWEC

FIGURE 5.3-9 LINER COSTS

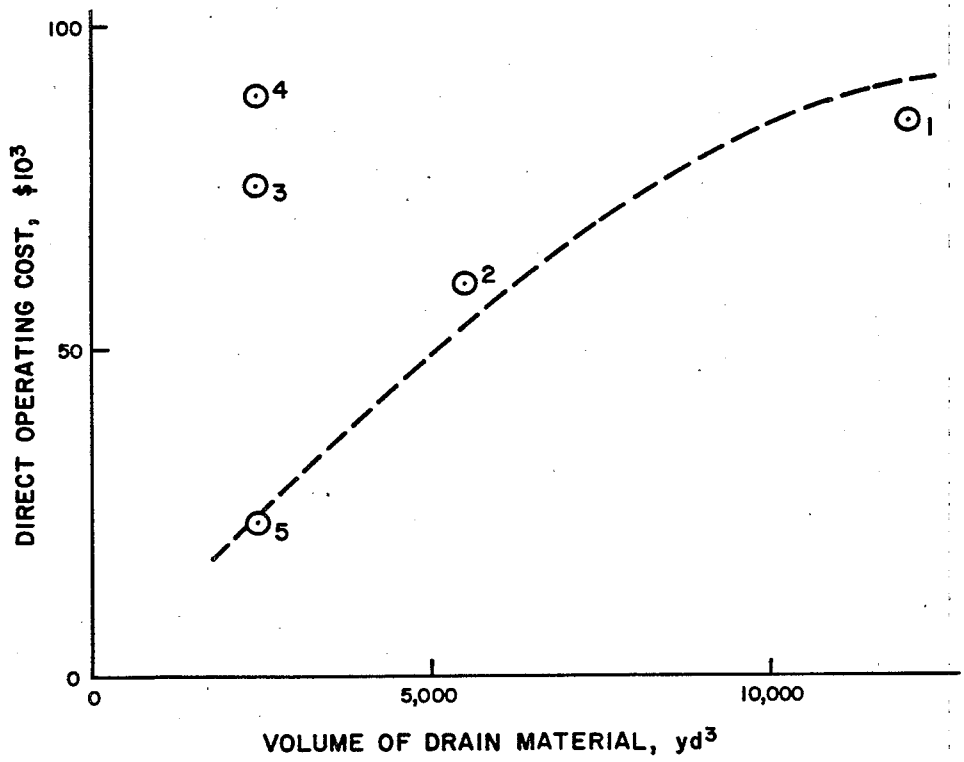

NOTES:

Examples 1 & 2 require only drain material due to the valley shape; leachate containment is performed by the contaminated runoff catchment pond of which the leachate is a negligible component.

Example 3 includes cost of toe ditch for collection due to broad valley at waste pile toe; containment is also by the contaminated runoff catchment pond.

Example 4 includes toe ditch collection and separate containment pond because, in this case, contaminated runoff is contained in evaporation ponds on the waste pile surface.

Example 5 includes only the drain material cost of Examples 3 & 4.

Example 2 is specific to the TOSCO II case studies, except the Colony proposal includes a layer of drain material only at the toe of the fill slope.

The costs indicated are cumulative for the project life.

See Section 6.2.3 for details on the solid waste management cost methodology.

SOURCE: SWEC

FIGURE 5.3-10 LEACHATE COLLECTION COSTS

Groundwater collection systems typically consist of blankets or zones of pervious sand and gravel drained beyond the perimeter of the landfill. This may be augmented with embedded perforated pipe to increase capacity and with collector ditches. The sand or gravel layer would be lined as necessary with filter fabric or surrounded by properly graded sand filters to prevent infiltration of smaller particles from adjacent materials. The system must also be designed to maintain its continuity despite possible subsidence or settlement of the landfill.

The costs of two groundwater collection systems were estimated and these are plotted in Figure 5.3-11. Both systems used gravel blankets under the pile to collect the groundwater seepage. In Example 2 the gravel blankets were used only above the seeps and springs, while in Example 1 an extensive network of the blankets was considered, resulting in a higher cost. The cost of the collection system should be proportional to the quantity of the drainage material used.

5.3.4 Surface Stabilization Technologies

The activities and technologies in the area of surface stabilization involve the treatment of the disturbed land surface and the problems associated with the disposal and reclamation of the waste material. These technologies are outlined in Figure 5.3-12 and their key features are presented in Table 5.3-5.

Dust Control--

The purpose of dust suppression is to limit pollution from airborne dust, particularly during the placement of the waste material in a fill. Dust suppression can be accomplished by spraying the haul roads and fill surface with water or a combination of water and a chemical binder. Haul roads could, alternatively, be paved.

Use of water alone for dust suppression would necessitate repeated applications, often more than one per day, to be effective. Water with a chemical binder should necessitate only a few applications to a given surface to stabilize it for a year or more unless it receives heavy traffic. Finally, vegetation would provide perhaps the most permanent means of dust control, but this would not be practical except on surfaces which would not be disturbed for a number of years.

The dust suppression technology assumed in developing the cost data for two examples consisted of routine spraying of the processed shale pile with water and additives to minimize the dust generated due to the wind and the waste hauling and placement activities. Depending on the processed shale characteristics, this operation could either be continuous or intermittent. The cost curve in Figure 5.3-13 is based on the assumption that both the manpower and equipment operation requirements are continuous. Theoretically, these requirements could differ depending on the rate of waste production and the surface area of the particular waste pile; however, both cases estimated were assumed to be equivalent in this respect.

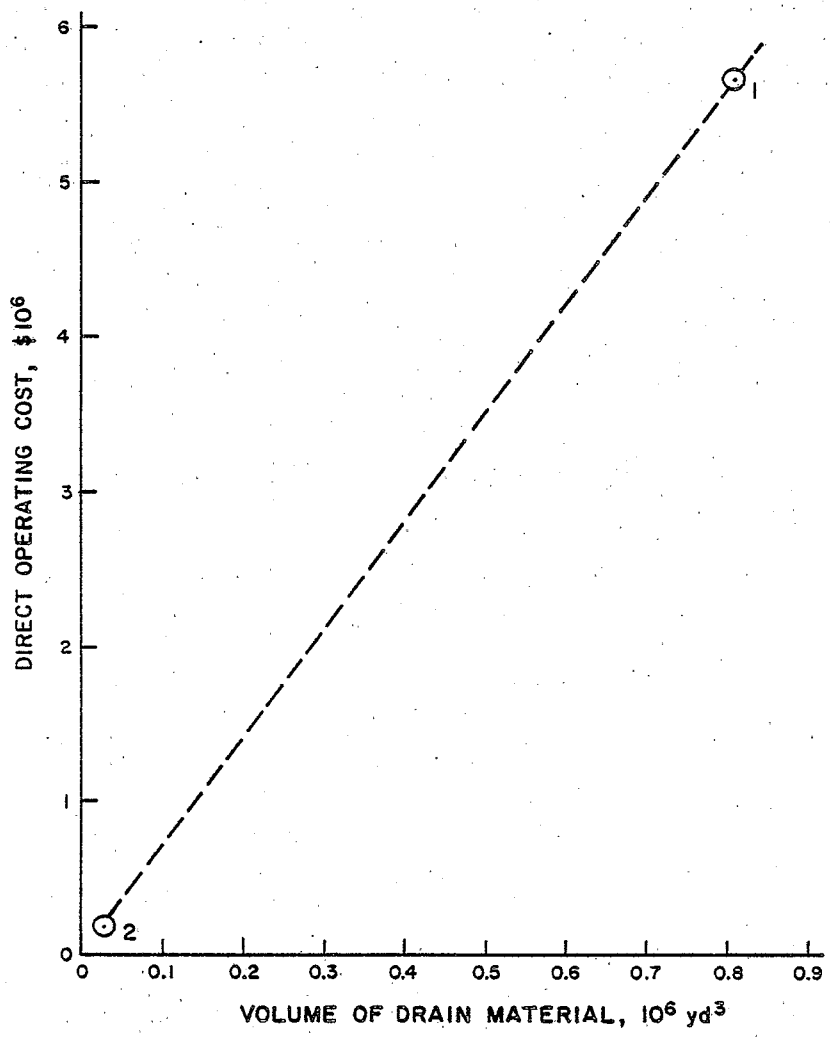

NOTES:

Examples 1 & 2 consist of gravel blankets for collection of groundwater from springs and seeps; extent of blankets dictated by the existence and extent of such conditions.

Example 2 is specific to the TOSCO II case studies, except the drainage layer is placed only above seeps and springs according to the Colony proposal.

The costs indicated are cumulative for the project life.

See Section 6.2.3 for details on the solid waste management cost methodology.

SOURCE: SWEC

FIGURE 5.3-11 GROUNDWATER COLLECTION COSTS

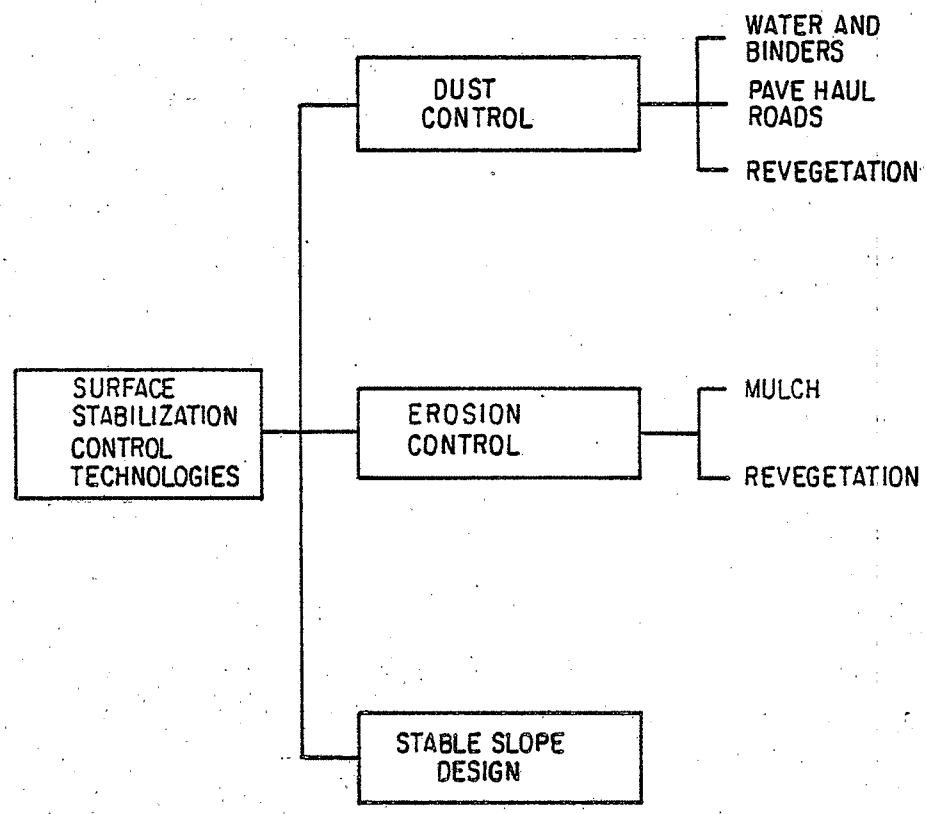

SOURCE: SWEC

FIGURE 5.3-12 SURFACE STABILIZATION TECHNOLOGIES

TABLE 5.3-5. KEY FEATURES OF SURFACE STABILIZATION TECHNOLOGIES

Control Technology	Principle	Purpose	Comments
Dust Control		Prevents or limits dust pollution from wind blowing across exposed surfaces or from vehicular traffic.	
Water and Binders	Fluid sprayed on the surface binds the fine particles together.		Well developed technology that is commonly used in mining operations.
Pave Haul Roads	A hard surface on the haul road prevents generation of dust by vehicular traffic.		Should improve traffic conditions on the road.
Revegetation	Vegetation prevents dust caused by wind.		Not useful in areas with any equipment traffic or where the surface is being disturbed by other activities.
Erosion Control		Simplifies reclamation, prevents blockage of the drains, and prevents contamination of surface waters by eroded material.	
Mulch	Various materials are placed on the slope to limit erosion.		Quick and easy to accomplish but is only a temporary measure.
Revegetation	Plant growth is started on the slope to limit erosion.		Permanent control but slow to achieve.
Stable Slope Design	Design slope to minimize stability problems and maintenance.	Makes erosion control, revegetation, and drainage easier. Restricts waste material to a definite, predefined area.	

Source: SWEC.

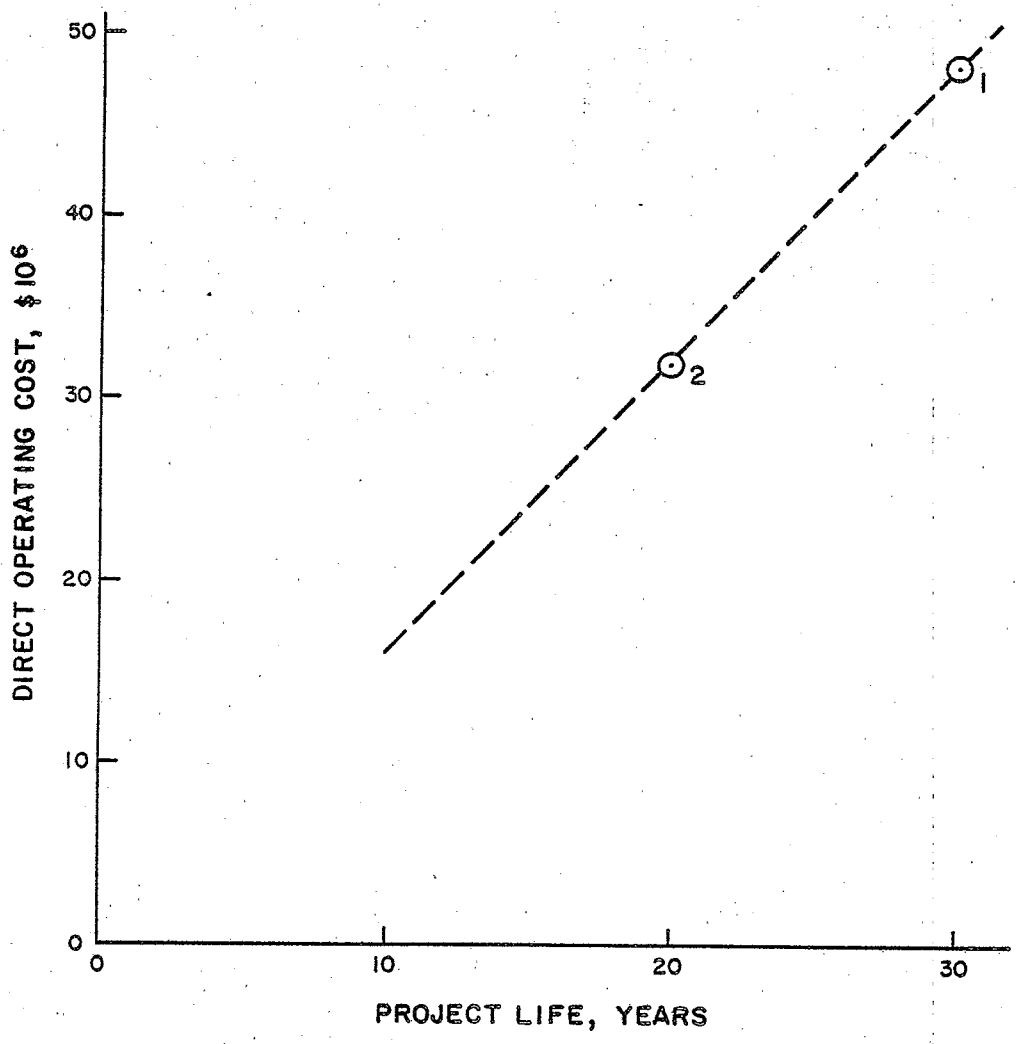

NOTES:

Example 1 assumes a 30-year project life, while Example 2 assumes a 20-year life.

The TOSCO II case studies have a project life of 20 years according to the Colony proposal.

The costs indicated are cumulative for the project life.

See Section 6.2.3 for details on the solid waste management cost methodology.

SOURCE: SWEC

FIGURE 5.3-13 DUST CONTROL COSTS

Erosion Control--

The purpose of erosion control is to keep the waste material in place so that the surface drains remain free flowing, the slopes remain stable, eroded material does not pollute surface streams, and reclamation and revegetation efforts are not hampered. Some means of limiting erosion include contouring the surface with short and gentle slopes, providing for drainage of the slopes at frequent intervals, using mulch or filter fabric to dampen the impact of water flow, and revegetating the completed faces. Of these measures, grading and drainage are essential, take effect immediately, and last as long as they are maintained. Mulch or filter fabric also provide a quick control, but they are of a temporary nature. Revegetation provides a permanent control, but it is generally slower to take effect.

A major consideration in planning erosion control measures is the severity of rainfall in the area. A large proportion of the water from a high-intensity rainfall would run off the surface, thus increasing the erosion.

Reclamation and revegetation consist of placing a subsoil and topsoil strata of sufficient thickness to support vegetation, and then seeding the disposal area with native or introduced species. The greatest contributor to the magnitude of cost for this control technology is the thickness of the soil strata and the costs associated with the delivered soil material, i.e., the source development, processing and hauling costs. Soil and subsoil stripped from the disposal site may not be available in sufficient quantity to meet the reclamation needs. The cost curves presented in Figure 5.3-14 illustrate five examples. Examples 1 and 5 included 2 feet of subsoil (sand-gravel material) and 30 inches of topsoil, both of which were brought in from off-site sources and thus had additional costs involved. Examples 2 and 3 also used the same thicknesses, but the soils were available on the site. Example 4 used no subsoil and only 6 inches of topsoil which was available on the site; therefore, additional material costs were not involved. All examples included the cost of revegetation. It is evident from the figure that the cost of erosion control can vary significantly depending on the factors considered; however, in any category, the costs are proportional to the area reclaimed and revegetated.

Stable Slope Design--

The purpose of designing the slopes to be stable under prevailing conditions is to minimize the maintenance of the landfill and to avoid hampering of the reclamation and revegetation efforts. The techniques used in designing stable slopes are a well developed part of soils engineering. To arrive at the most advantageous slope design, other factors besides basic stability, such as erosion, ease of placement, reclamation and revegetation, must be considered. However, the physical characteristics of the waste material will dictate a limiting slope angle. The costs of achieving a stable slope design are incidental to the placement and revegetation of the fill material; hence, additional costs are not involved.

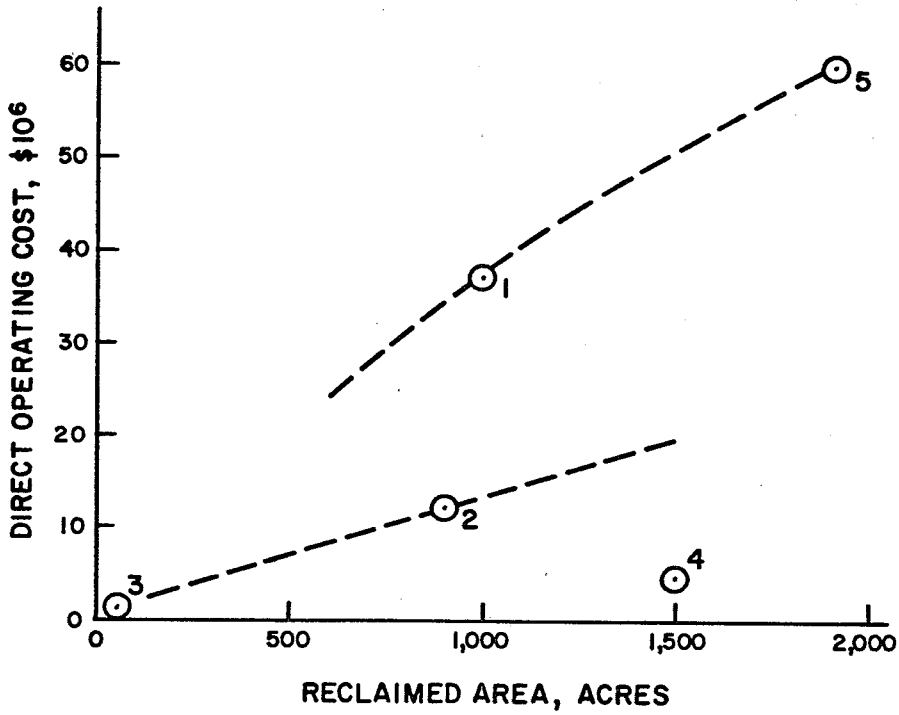

NOTES:

Examples 1 & 5 include 2 feet of subsoil and 30 inches of topsoil, both obtained off site.

Examples 2 & 3 include 2 feet of subsoil and 30 inches of topsoil obtained on site.

Example 4 includes no subsoil and only 6 inches of topsoil obtained on site.

Example 2 is specific to the TOSCO II case studies, except the Colony proposal includes a total of 18 inches of soil cover.

The costs indicated are cumulative for the project life.

See Section 6.2.3 for details on the solid waste management cost methodology.

SOURCE: SWEC

FIGURE 5.3-14 RECLAMATION AND REVEGETATION COSTS

5.3.5 Hazardous Waste Control Technologies

The control of hazardous waste involves its permanent impoundment in a permitted disposal facility. This facility may be built on the project site or the wastes may be sent to an existent, off-site permitted facility. These options are outlined in Figure 5.3-15 and their key features are presented in Table 5.3-6.

On-site Disposal--

Hazardous waste lagoons are a well developed and accepted approach to solid waste management. They are actually an integration of several control technologies discussed in Sections 5.3.2, 5.3.3 and 5.3.4. Some of the included technologies would be an embankment surrounding the lagoon, a runon diversion system, one or two bottom liners, a surface cover, reclamation and revegetation, and monitoring.

There are certain advantages to building a hazardous waste facility on site. This option automatically assumes segregation of the hazardous and nonhazardous wastes and, hence, their separate disposal. An advantage of this approach is that much of the material necessary for the lagoon would be available on site or it already would have been brought in for the non-hazardous waste landfill. Furthermore, transport of the wastes beyond the property boundaries will not be required. A significant advantage may be that the producer of the hazardous wastes (the oil shale developer) will have complete control over the disposal of the wastes.

There are also certain disadvantages to on-site disposal of the hazardous wastes. To be efficient in evaporating the liquids and consolidating the sludge, the lagoon should be located preferably on a level site, which may not be readily available. Rugged, uneven terrain would increase the cost of site preparation, runon control and reclamation. There is also a possibility that the lagoon may interfere with other ongoing activities and the resource recovery.

Off-site Disposal--

Off-site existent facility. This would be an already existing facility where the wastes can be disposed of on an "as needed" basis. A payment is required for every shipment, but the cost may be lower than that of building and maintaining a new facility. Also, a significant amount of time and effort involved in the licensing, design, and construction of a new facility can be saved. The capacity and distance of the existent facility must also be considered in selecting the disposal approach.

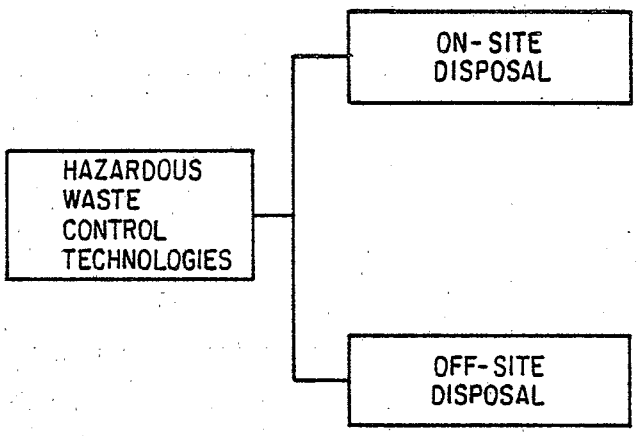

SOURCE: SWEC

FIGURE 5.3-15 HAZARDOUS WASTE CONTROL TECHNOLOGIES

TABLE 5.3-6. KEY FEATURES OF HAZARDOUS WASTE CONTROL TECHNOLOGIES

Control Technology	Principle	Purpose	Comments
On-site Disposal	Dispose of hazardous wastes in a lagoon established on site.	Dispose of hazardous wastes produced by processing of oil shales.	The oil shale developer has complete control of hazardous wastes produced by the facility.
Off-site Disposal	Establish lagoon off site or pay for disposal in existing permitted facility.	Dispose of hazardous wastes produced by processing of oil shales.	Provides a broader selection of sites, although the wastes must be transported. Potentially less involvement with the wastes.

Source: SWEC.

SECTION 6

POLLUTION CONTROL COSTS

This section provides an analysis of estimated pollution control costs for the TOSCO II case studies analyzed in this manual (see Sections 2 and 3 for descriptions of these case studies). Section 6.1 presents fixed capital and direct annual operating costs for each control and explains how they were developed. These costs are referred to as the "engineering costs."

Section 6.2 explains the cost analysis methodology used to develop the total annual and per-barrel pollution control costs. These costs combine capital and annual operating costs, allow for taxes, and incorporate a return on investment. This is an approach similar to that which a private developer might use to determine costs or assess the economic feasibility of a project. Section 6.2 also details the economic assumptions that are incorporated into the calculation of total annual control costs.

Section 6.3 presents estimated total annual control costs and per-barrel costs for each control using a set of standard economic assumptions. These costs are assembled into total per-barrel costs for air, water, and solid waste pollution control for the case studies examined in this manual. This section also examines the sensitivity of the per-barrel control costs to a series of changes in the engineering costs and economic assumptions.

Section 6.4 provides more detailed information supporting Sections 6.1, 6.2 and 6.3. Section 6.4.1 provides the algorithms that were used to determine total annual control costs and per-barrel control costs, and Sections 6.4.2 and 6.4.3 provide examples, respectively, of fixed charge rate calculations and cost levelizing calculations.

Section 6 uses a large number of cost and economic terms. The interrelationships among the more important of these terms is illustrated in Figure 6.0-1. Each term is explained when it is first used in the text, but the reader may find it helpful to use this figure to provide an overview while reading the various sections. In addition, Table 6.2-4, presented later in this section, indicates the estimated relative magnitude of the components of per-barrel control cost for a typical major pollution control.

6.1 ENGINEERING COST DATA

6.1.1 Bases of Engineering Cost Data

Throughout this manual a distinction is made between capital costs and annual operating costs. There are two types of capital cost, fixed capital

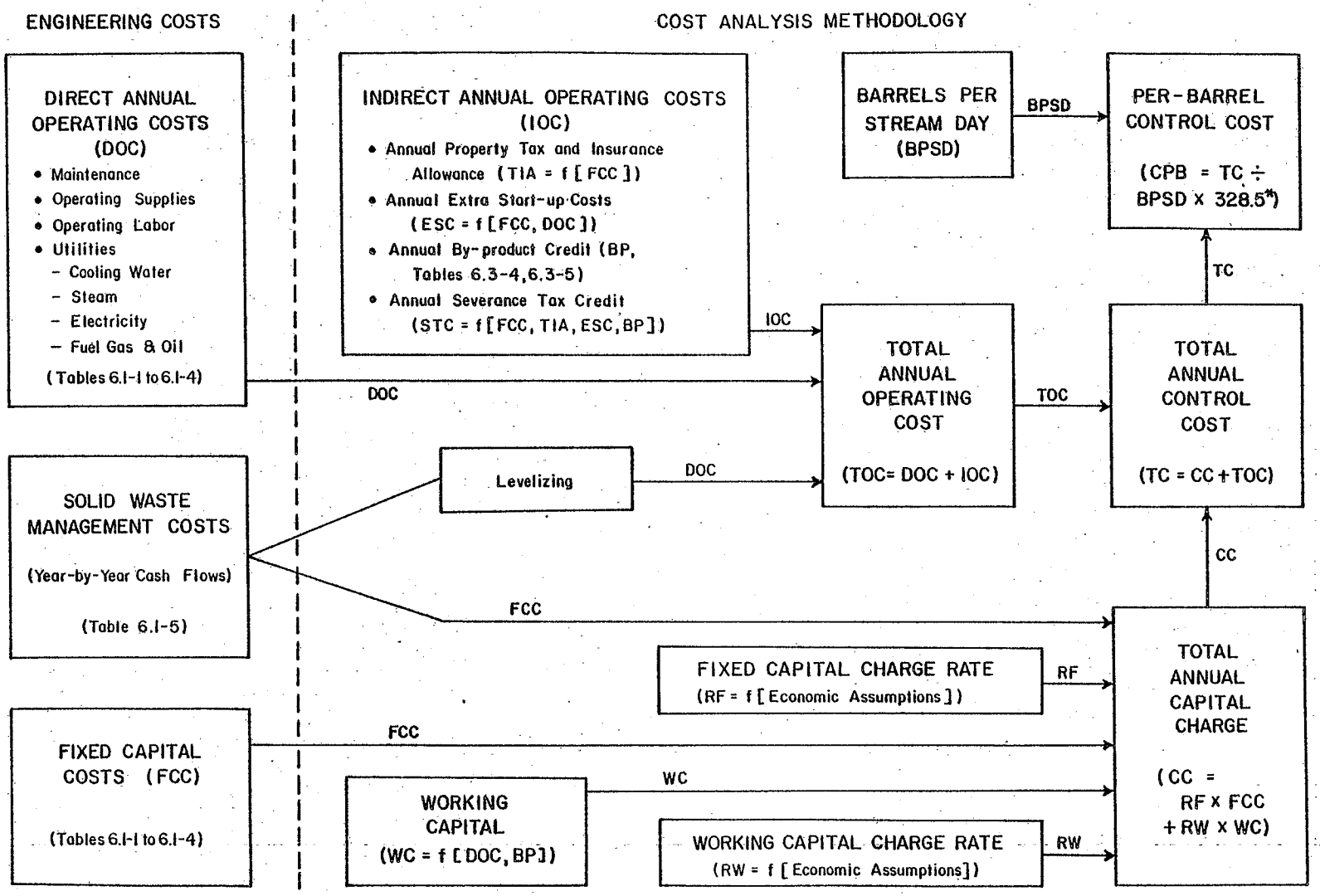

* 328.5 is the number of operating days in a normal year.

Note: f means "a function of"

SOURCE: DRI

FIGURE 6.0-1 INTERRELATIONSHIPS AMONG VARIOUS COST AND ECONOMIC TERMS

and working capital, and two types of annual operating cost, direct and indirect.

Fixed capital is investment in construction and equipment, whereas working capital is money that is required to operate the plant, e.g., that which is tied up in inventories.

Direct annual operating costs include maintenance, operating supplies, operating labor and utilities costs. Indirect annual operating costs comprise additional annual costs, i.e., property tax and insurance, an allowance for extra start-up costs, a credit for severance tax not paid and by-product credits.

Section 6.1 only considers fixed capital costs and direct annual operating costs. Working capital and indirect annual operating costs are considered in Section 6.2.

Assumptions Used to Develop Costs--

All costs are expressed in mid-1980 constant dollars. The following data apply to air and water pollution control costs. Solid waste management costs were developed on the basis that these activities are contracted out, since they are all construction-type activities (see discussion later in this subsection).

Fixed capital costs. Fixed capital costs are of the "preliminary estimate" category. Physical plant costs for air emission controls were developed by Stone and Webster Engineering Corporation (SWEC) and for water pollution controls by Water Purification Associates (WPA). Actual vendor quotes were used for major items of equipment; costs for other equipment were obtained from data files maintained by SWEC and WPA. Total physical plant costs were developed from the equipment costs by adding appropriate allowances for the following:

- Site preparation, excavation and foundations
- Concrete and rebar
- Support structures
- Piping, ductwork, joints, valves, dampers, etc.
- Duct and pipe insulation
- Pumps and blowers
- Electrical
- Instrumentation and controls
- Monitoring equipment
- Erection and commissioning
- Painting
- Buildings.

To arrive at the total fixed capital cost, the following factors were added to the physical plant cost:

Engineering and construction overhead:	25% of physical plant cost.
Contractor's fee:	3% of bare module cost (physical plant cost plus engineering and construction overhead).
Contingency:	20% of bare module cost.

For an explanation of this method of developing estimates of fixed capital costs, see Uhl (June 1979). A 20% contingency factor was chosen because there are only pilot plant data for the TOSCO II retorting process.

It is considered that the accuracy of these cost estimates is within ±30 percent. Although the accuracy of a preliminary fixed capital cost estimate is normally regarded as ±20 percent, uncertainties about stream magnitudes and composition decrease the accuracy of these estimates to ±30 percent.

Direct annual operating costs. There are two components which make up the total annual operating cost. The direct annual operating cost can be regarded as the basic (or engineering) cost, while calculation of the indirect annual operating cost makes some adjustments to this cost. By-product credits are included in the indirect annual operating cost. Data on the bases of direct annual operating costs are given below, while the bases of indirect annual operating costs are outlined in Section 6.2.

Direct annual operating costs are made up of the following components:

- Maintenance
- Operating supplies
- Operating labor
- Utilities
  - --Cooling water
  - --Steam
  - --Electricity
  - --Fuel oil and gases.

Maintenance costs include maintenance labor and replacement parts, consumables used for maintenance, etc.

Operating supplies are consumable items (such as chemicals) used in the regular operation of the control (as opposed to use for maintenance).

Operating (and maintenance) labor is costed at $30/hr. This is a "loaded" rate, meaning that it incorporates some overhead-type costs to avoid developing them separately. The rate is made up as follows:

A.	Wages for direct labor	$11.00/hr
B.	Fringe benefits (45% of A)	4.95
C.	Field supervision (15% of A + B)	2.40
D.	Overhead (50% of A + B + C)	9.20
E.	General & administrative charge (9% of A + B + C + D)	2.45
	Total	$30.00/hr

In mid-1980, examination of union agreements showed that oil refinery direct operating labor was receiving approximately $10/hr in Colorado. However, it is anticipated that when oil shale development occurs, this will bid up local labor rates, so $11/hr, which was used for the oil shale PCTMs, is a reasonable value. The multiplier factors, used to arrive at the "loaded" labor rate of $30/hr, were suggested by SWEC based on project experience in the western U.S.A.

Cooling water is costed at 11.3 cents per 10^3 gal circulated (3¢/m^3). This is only a charge for the use of the cooling tower. The cost of makeup water for the Claus and Wellman-Lord systems is charged at $19 per 10^3 gal, reflecting the estimated cost of providing treated water from an external source. The cost of treating other makeup water is included under water pollution control.

Process steam and fuel gases, including butane, are charged at $3.00 per million Btu, and fuel oil is charged at $32 per barrel.

Electricity is charged at 3 cents per kW-hr.*

There is no contingency factor in the direct annual operating costs for air and water pollution controls.

Solid Waste Management Costs--

Solid waste management costs in the form of a year-by-year cash flow were developed by SWEC using company cost data files. They include the same engineering and construction overhead, contractor's fee, and contingency factor (20%) as the fixed capital costs discussed earlier. The use of a 20% contingency factor is appropriate since all solid waste management costs are

* To be consistent among the three oil shale PCTMs, electricity is charged at 3 cents per kW-hr, whether purchased or generated on site. This figure represents a compromise between the value of electricity sold by plants that will have surplus on-site generated power and the higher cost of power purchased from a utility.

of a construction nature, subject to uncertainties similar to those inherent in fixed capital costs.

6.1.2 Details of Engineering Costs

Tables 6.1-1 through 6.1-4 present details of the fixed capital and direct annual operating costs for each air and water pollution control. The operating costs relate to a year of normal operation, i.e., full production. For the start-up period, direct annual operating costs are modified to an appropriate level by the cost analysis methodology.

Table 6.1-5 details the solid waste management costs on a year-by-year basis. These costs are allocated to fixed capital or direct annual operating categories in Section 6.2 (Table 6.2-3).

6.2 COST ANALYSIS METHODOLOGY

In the cost analysis, engineering cost data are transformed into two primary measures--the total annual pollution control cost and the control cost per barrel of shale oil. These costs incorporate both capital and annual operating costs and consider project timing, taxes, and the necessary return on investment.

6.2.1 Overview of Cost Analysis Methodology

In private industry, one of the most widely accepted methods of evaluating the economics of a project is the discounted cash flow (DCF) approach. Using this approach, a project must be able to demonstrate that it can produce some established minimum rate of return on investment--known as a "hurdle" rate--to be acceptable.

One method for applying the DCF approach to a complete oil shale project is to determine the selling price which would provide the revenue required to produce a minimum acceptable rate of return (DCF ROR). With this method, a selling price for oil can be established by distributing the required revenue uniformly over every barrel of oil produced.

The same technique can be utilized to determine the total annual and per-barrel costs of pollution control. In practice, pollution control is not a separable aspect of an oil shale project. Consequently, a private developer will require the same DCF ROR on pollution controls as for the entire project.

If the revenue necessary to provide the required DCF ROR for each control (expressed in constant dollars) is distributed uniformly over each barrel of shale oil produced, then this also implies a constant total revenue requirement in each year of normal (full) production. However, in the start-up years, less oil is produced, with the result that the annual revenue requirement is prorated. Additional costs incurred in the start-up period were spread over all production in order to produce a uniform per-barrel control cost.

TABLE 6.1-1. DETAILED ENGINEERING COSTS FOR AIR POLLUTION CONTROLS

Case Study	Control (No. of Units)	Control Location	Fixed Capital Cost ($000's)	Components of Direct Annual Operating Cost ($000's/yr)				Total Direct Annual Operating Cost ($000's/yr)
				Maintenance	Operating Supplies	Operating Labor	Electricity	
Particulate Controls								
All	Fabric Filter (1)	Transfer Tower Feed Bin	381	6	--	--	14	20
All	Fabric Filter (1)	Reclaim Tunnel	415	6	--	--	16	22
All	Fabric Filter (1)	Portal Transfer Point	44	1	--	--	2	3
All	Fabric Filter (1)	Primary Crusher	450	8	--	--	20	28
All	Fabric Filters (4)	Fine Crusher	2,180	34	--	--	88	122
All	Fabric Filter (1)	Fine Ore Storage	310	5	--	--	12	17
All	Water and Foam Sprays	Mine, Open Stockpiles Conveyor Transfer Points	500	65	591	--	152	808
All	High Energy Venturi Scrubbers (6)	Raw Shale Preheat System	7,200	156	--	--	1,366	1,522
All	Venturi Scrubbers (6)	Processed Shale Moisturizer	1,330	29	--	--	184	213
All	Venturi Scrubbers (6)	Ball Circulation System	2,190	48	--	--	304	352
Retort Gas Treatment								
A,B	DEA (1)	Gas Recovery Unit	45,900	1,194	107	158	8,345[a]	9,804
A,B	Claus (1)	DEA Acid Gas System	11,740	306	--	40	540[b]	886
A,B	Wellman-Lord (1)	Claus Sulfur Plant	9,000	234	50	40	2,875[c]	3,199
C	Stretford (1)	Gas Recovery Unit	52,000	1,161	872	237	3,063	5,333
Miscellaneous Controls								
All	Thermal Oxidizers (6)	Raw Shale Preheat System	23,120	168	--	--	16,294[d]	16,462
All	Low Flare & Thermal Oxidizer (1)	Interrupt Situations	810	--	--	--	--	--
All	Floating Roof Oil Storage Tanks (3)	Product Storage	350	--	--	--	--	--
All	Ammonia Storage (2)	Ammonia Separation	330	--	--	--	--	--
All	Proper Maintenance	Valves, Pumps, Etc.	50	42	--	5	--	47
All	Catalytic Converters	Diesel Equipment	100	34	--	--	--	34

[a] This includes $7,823,000 for steam at $3/MMBtu.

[b] This includes $386,000 for process makeup water at $19/1,000 gal.

[c] This includes $2,058,000 for fuel gas at $3/MMBtu, $478,000 for steam at $3/MMBtu, $310,000 for cooling water at 11.3¢/1,000 gal (3¢/m^3), and $16,000 for process makeup water at $19/1,000 gal.

[d] This includes $12,063,000 for butane at $3/MMBtu and $4,232,000 for fuel oil at $32/bbl.

Source: DRI estimates based on information provided by SWEC.

TABLE 6.1-2. DETAILED ENGINEERING COSTS FOR WATER POLLUTION CONTROLS, CASE STUDY A

Control	Fixed Capital Cost ($000's)	Components of Direct Annual Operating Cost ($000's/yr)						Total Direct Annual Operating Cost ($000's/yr)
		Maintenance	Operating Supplies	Operating Labor	Cooling Water	Steam	Electricity	
API Oil/Water Separator	140	3	--	--	--	--	--	3
Ammonia Recovery Unit	4,659	152	201	237	345	2,653	71	3,659
Foul Water Stripper	1,130	37	--	118	81	704	--	940
River Water Clarifier*	788	26	84	--	--	--	--	110
Cooling Water Treatment*	0	--	28	--	--	--	--	28
Boiler Feedwater Treatment*	491	14	292	66	--	--	--	372
Equalization Pond	150	2	--	--	--	--	--	2
Runoff Oil/Water Separator	27	1	--	--	--	--	--	1
TOTAL	7,385	235	605	421	426	3,357	71	5,115

* These technologies could be considered as part of the process rather than pollution control.

Source: DRI estimates based on information provided by WPA.

TABLE 6.1-3. DETAILED ENGINEERING COSTS FOR WATER POLLUTION CONTROLS, CASE STUDY B

Control	Fixed Capital Cost ($000's)	Components of Direct Annual Operating Cost ($000's/yr)						Total Direct Annual Operating Cost ($000's/yr)
		Maintenance	Operating Supplies	Operating Labor	Cooling Water	Steam	Electricity	
API Oil/Water Separator	140	3	--	--	--	--	--	3
Ammonia Recovery Unit	4,659	152	201	237	345	2,653	71	3,659
Foul Water Stripper	1,130	37	--	118	81	704	--	940
Bio-oxidation Unit	2,066	67	89	237	--	--	32	425
River Water Clarifier*	788	26	84	--	--	--	--	110
Cooling Water Treatment*	0	--	28	--	--	--	--	28
Boiler Feedwater Treatment*	491	14	292	66	--	--	--	372
Equalization Pond	150	2	--	--	--	--	--	2
Runoff Oil/Water Separator	27	1	--	--	--	--	--	1
TOTAL	9,451	302	694	658	426	3,359	103	5,540

* These technologies could be considered as part of the process rather than pollution control.

Source: DRI estimates based on information provided by WPA.

TABLE 6.1-4. DETAILED ENGINEERING COSTS FOR WATER POLLUTION CONTROLS, CASE STUDY C

Control	Fixed Capital Cost ($000's)	Components of Direct Annual Operating Cost ($000's/yr)						Total Direct Annual Operating Cost ($000's/yr)
		Maintenance	Operating Supplies	Operating Labor	Cooling Water	Steam	Electricity	
API Oil/Water Separator	140	3	--	--	--	--	--	3
Ammonia Recovery Unit	4,869	158	218	237	369	2,834	76	3,892
Foul Water Stripper	1,130	37	--	118	81	704	--	940
River Water Clarifier*	788	26	84	--	--	--	--	110
Cooling Water Treatment*	0	--	30	--	--	--	--	30
Boiler Feedwater Treatment*	491	14	292	66	--	--	--	372
Equalization Pond	150	2	--	--	--	--	--	2
Runoff Oil/Water Separator	27	1	--	--	--	--	--	1
TOTAL	7,595	241	624	421	450	3,538	76	5,350

* These technologies could be considered as part of the process rather than pollution control.

Source: DRI estimates based on information provided by WPA.

TABLE 6.1-5. ENGINEERING COSTS AND TIMING OF SOLID WASTE MANAGEMENT ACTIVITIES
(Thousands of Dollars)

Activity	Project Year → 0	1	2	3	4	5	6	7	8	9	10	11	12	13	14	15	16	17	18	19	20	21
SURFACE HYDROLOGY																						
Runoff Collection			162	162	162	162	162	162	162	162	162	162	162	162	162	162	162	162	162	162	162	162
Surface Cover			564	564	564	564	564	564	564	564	564	564	564	564	564	564	564	564	564	564	564	564
Upper Embankment		209																				
Lower Embankment		304	304	304																		
Runon Diversion		261																				
Stilling Basins		2	2	2	2	2	2	2	2	2	2	2	2	2	2	2	2	2				
Water Impoundments		1338	1338	1338																		
SUBSURFACE HYDROLOGY																						
Bottom Liner		594	594	594	594	594	594	594	594	594	594	594	594	594	594	594	594	594	594	594		
Shale Underdrain		4	4	4	4	4	4	4	4	4	4	4	4	4	4	4	4	4	4	4		
Monitoring Wells	83										17									17		
Groundwater Collection	6	12	12	12	12	12	12	12	12	12	12	12	12	12	12							
SURFACE STABILIZATION																						
Clear and Grub	62	62	62	62	62	62	62	62	62	62	62	62	62	62	62	62	62	62	62	31		
Strip Topsoil	289	289	289	289	289	289	289	289	289	289	289	289	289	289	289	289	289	289	289	144		
Dust Suppression		1615	1615	1615	1615	1615	1615	1615	1615	1615	1615	1615	1615	1615	1615	1615	1615	1615	1615	1615	1615	
Reclamation and Revegetation			60	120	120	120	120	120	120	120	120	120	120	120	120	120	120	120	120	120	120	120
TOTAL (all items)	440	4690	5006	5066	3424	3424	3424	3424	3424	3424	3441	3424	3424	3424	3424	3412	3412	3412	3410	3251	2461	846

Note: Year 1 is the first year of production.

Source: DRI estimates based on information provided by SWEC.

The total annual required revenue is utilized to satisfy two major components: the total annual operating cost, and a component that provides the necessary return on investment, called the total annual capital charge. Note that with the DCF approach, profit is based solely on investment; operating costs are passed straight through as one component of the total revenue requirement, without addition of any profit element. This is normal practice for industrial project assessments.

To relate an annual capital charge to the corresponding investment, a "capital charge rate" was used. In practice, there are two types of capital investment: fixed capital (i.e., physical equipment) and working capital (which is nondepreciable investment). The "fixed charge rate" is defined as the proportion of investment in fixed capital that must be recovered in a year of normal production in order to provide the required DCF ROR. The "working capital charge rate" performs a similar function for the working capital. The total annual capital charge for a pollution control is the sum of the annual fixed capital charge and the annual working capital charge.

Fixed charge rates have several economic assumptions embedded in them. Some of these assumptions are common to all pollution controls, i.e., the project life and operating (stream) factors, the income tax rate, and the required DCF ROR.

Other assumptions vary according to the pollution control or group of controls. These are: the timing of the investment in fixed capital, the depreciation period, and the investment tax credit details. Consequently, different fixed charge rates are used for different groups of pollution controls.* (These rates, as well as the underlying standard economic assumptions, are listed later in Table 6.2-2.)

The working capital charge rate depends only on the project life and operating factors, the timing of the investment in working capital and the required DCF ROR. Since none of these assumptions varies among controls, the same working capital charge rate is used for each control.

As already indicated, the total annual cost for a control is the sum of the total annual capital charge and the total annual operating cost. The total annual operating cost comprises two components. The "direct annual operating cost" consists of maintenance, operating supplies, operating labor and utilities. The "indirect annual operating cost" comprises an annual allowance for property taxes and insurance, any annual by-product credits, and an allowance for extra start-up costs, i.e., those that are in excess of the direct annual operating cost prorated in accordance with production. It also includes a credit reflecting a reduction in the Colorado severance tax

---

* The use of several different fixed charge rates in the same oil shale PCTM may appear complex. However, since the manuals examine several alternatives for pollution control, an accurate evaluation of capital charges is needed. A less accurate approach, such as assuming a single capital expenditure profile for all controls, could conceivably affect the per-barrel cost ranking of pollution control alternatives.

that must be paid, because the cost of each pollution control reduces the severance tax liability.* Extra start-up costs and the severance tax credit are "levelized" to distribute them uniformly over each barrel of shale oil produced since they do not vary in proportion to production. (Levelizing takes a cost that does not vary in proportion to production and finds an economically equivalent cost that has the same time-profile as production [see Sections 6.2.3 and 6.4.3].) To summarize:

Total Annual Control Cost = Annual Fixed Capital Charge + Annual Working Capital Charge + Direct Annual Operating Cost + Indirect Annual Operating Cost.

For air and water pollution controls, direct annual operating costs are specified for a normal year of production and are implicitly prorated during the start-up years. In practice, operating costs during the start-up period will be higher, but this is allowed for via the extra start-up costs discussed in Section 6.2.2. The solid waste management costs are developed in the form of a year-by-year cash flow (see Table 6.1-5) which must be converted into equivalent fixed capital and direct annual operating costs for a full production year (see Section 6.2.3 and Table 6.2-3).

The per-barrel control cost is obtained by dividing the total annual control cost by the production in a normal (full production) year. (Per-barrel operating costs and capital charges can be calculated in the same way.) The detailed algorithms for these calculations and for determining fixed and working capital charge factors are given in Section 6.4.1.

6.2.2 Economic Assumptions Used in Total Cost Calculations

To transform engineering cost data provided in Section 6.1.2 into total annual capital charges, total annual operating costs, and total annual or per-barrel control costs, a number of economic assumptions were made. Most of these assumptions are listed in Table 6.2-1, and Table 6.2-2 summarizes those assumptions that vary from control to control. The values given in these two tables are the standard values, known as the "standard economic assumptions," which have been used for the cost analyses presented in the oil shale PCTMs. Some of these are varied in the sensitivity analyses which are used to show how control costs change in response to alternative economic assumptions and to changes in the engineering costs.

---

* The distinction between the two components of operating cost is made for convenience in performing the calculations and is not fundamental. The direct annual operating cost is comprised of basic cost elements, whereas the indirect annual operating cost comprises a series of adjustments that are influenced by other factors, such as tax assumptions. Direct annual operating costs for each control are given in Tables 6.1-1 through 6.1-4 and 6.2-3. Indirect annual operating costs for all controls are calculated using a standard algorithm (see Section 6.2.2), except for any by-product credits which are given in Tables 6.3-4 and 6.3-5.

TABLE 6.2-1. SUMMARY OF STANDARD COST AND ECONOMIC ASSUMPTIONS

Assumptions
COST ASSUMPTIONS
• Base Year: Mid-1980 dollars
• Basic Labor Rate: $11.00/hr*
• "Loaded" Labor Rate*: $30.00/hr
• Fixed Capital Costs: 25% engineering and construction overhead and 3% contractor's fee included*
• Contingency Allowances: 20%, all fixed capital costs* 0%, most operating costs* 20%, solid waste direct operating costs
ECONOMIC ASSUMPTIONS
• Project Life: 20 years*
• Normal Output: 47,000 Barrels per Stream Day (BPSD)
• Operating Factors: Year 1 - 50% Year 2 - 75% Years 3-20 - 90%*
• Approach: Discounted Cash Flow Evaluation (DCF)*
• Discount Factors: Discrete,* year-end basis
• Method: Determination of Revenue Requirement to provide specified DCF ROR*
• Technique: Annual Capital Charge plus Annual Operating Cost
• Required DCF ROR: 12% (100% Equity Basis)*
• Cost Escalation: None (constant dollar evaluation)*
• Combined State and Federal Income Tax Rate: 48%*
• Depreciation: Method - Sum-of-Year's Digits* Period - 16 years, most items* 10 years, solid waste area 5 years, mobile equipment
• Investment Tax Credit: 20%, most items* 13 1/3%, mobile equipment
• Additional Start-up Costs (in Year 1): 3% of fixed capital, plus 20% of a normal year's direct operating cost
• Working Capital: 30 days' total operating cost (excluding by-product credit), plus 60 days' by-product credit
• Annual Allowance for Property Taxes and Insurance: 3% of fixed capital
• Colorado Severance Tax: Credit allowed
• Timing of Investment: Initial fixed capital expenditures can occur in Years -3 through +3; expenditures and tax considerations for each control are phased in accordance with the construction and initial operation of each control (see Table 6.2-2 for schedules)
• Corporate Financing: Tax credits and allowances can be passed through to a parent company that can benefit from them immediately, without waiting for the project to become profitable*
• Federal Depletion Allowance: Does not affect pollution control costs

* These methods and factors are in accordance with the recommendations, dated April 22, 1980, of EPA's ad hoc synfuels cost committee.

Source: DRI.

TABLE 6.2-2. ECONOMIC ASSUMPTIONS THAT VARY FROM CONTROL TO CONTROL

	Capital Expenditure Profile	Investment Tax Credit Rate %	Investment Tax Credit Profile	Depreciation Life (years)	Depreciation Starts	Fixed Charge Rate[a] Percent
Retort Timing All controls not identified elsewhere; these items are primarily associated with the retorts	Year -2: 10% Year -1: 30% Year 0: 60%	20	Same as capital[b]	16	Year 1	16.17
Mine Timing Fabric filters and water and foam sprays	Year -3: 10% Year -2: 20% Year -1: 70%	20	Same as capital[b]	16	Year 1	18.70
Early Water Management River water clarifier, runoff oil/water separator, and equalization pond	Year -3: 100%	20	Year -2: 100%	16	Year -2	21.64
Ammonia/Hydrocarbon Controls Ammonia storage, proper maintenance of valves and pumps, and floating roof oil storage tanks	Year -1: 30% Year 0: 70%	20	Same as capital[b]	16	Year 1	15.61
Catalytic Converters[c] (on mobile mining equipment)	Year -3: 100% Year 3: 100% Year 9: 100% Year 15: 100%	13 1/3[d]	Year -2: 100% Year 4: 100% Year 10: 100% Year 16: 100%	5	Year -2 Year 4 Year 10 Year 16	37.50
Solid Waste Management (Year 1) Runon diversion and upper embankment	Year 1: 100%	20	Year 2: 100%	10	Year 2	12.49
Solid Waste Management (Years 1,2,3) Lower embankment and water impoundments	Year 1: 33 1/3% Year 2: 33 1/3% Year 3: 33 1/3%	20	Same as capital[b]	10	Year 4	11.51

[a] For standard economic assumptions (see Table 6.2-1).

[b] Qualifies for investment tax credit progress payments.

[c] Capital is replaced three times during project life.

[d] Investment tax credit is reduced because equipment life is less than 7 years.

Source: DRI.

Where appropriate, the standard economic assumptions are discussed below. Others are discussed in connection with the sensitivity analyses in Section 6.3.2.

Timing of Control Capital Expenditures--

Table 6.2-2 includes the fixed capital expenditure profiles for each category of control. The construction schedule is based on Colony's PSD permit (Colony Development Operation, 1977). Engineering judgment was then used to determine when the pollution controls would be procured and installed, incorporating the impact of payments made during off-site fabrication. In general, expenditures on controls tend to be incurred later than those for most retort construction activities, since the controls are usually among the last items to be installed.

Part of the water pollution control system constitutes an exception to the above discussion. Basic site water management facilities must be installed and operational before most other activities can commence. Consequently, these items were assumed to be installed in Year -3 (i.e., 4 years before production commences) and placed into service in Year -2 for depreciation purposes.

Assumptions for Taxation*--

Depreciation. All oil shale PCTMs used a 16-year depreciation period for most assets. This corresponds to the mid-point of the IRS' Asset Depreciation Range (ADR) guidelines for oil refineries. In practice, many companies would use the lower end of the ADR range, which is 13 years; however, it has been found that this would make very little difference in the results of the analysis.

Some equipment clearly qualifies for a shorter life. Capital items associated with processed shale disposal, i.e., embankments, runon diversion, and water impoundments, were regarded as mining equipment, for which a 10-year depreciation period was used. A 5-year depreciation period was used for the mobile diesel equipment, and it was assumed that this equipment was replaced three times during the project life.

The depreciation method used for all taxation calculations was the Sum-of-the-Year's Digits method.

---

* All analyses were conducted prior to enactment of the Economic Recovery Tax Act of 1981 (PL 97-34). As far as an oil shale project is concerned, the main impact of this act is to permit very rapid depreciation under the Accelerated Cost Recovery System (ACRS). Using ACRS, most property would be depreciated over 5 years and mobile equipment would be depreciated over 3 years. A rough estimate of the effect of the provisions of the Economic Recovery Tax Act of 1981 on the pollution control costs is given in Section 6.3.1.

Investment Tax Credit (ITC). A basic 20% ITC was used for all items in accordance with the Energy Tax Act of 1978 (PL 95-618). The mobile equipment has a depreciation period of only 5 years, so the credit is reduced by one-third, to 13 1/3 percent.

Where payments for a control extend over more than one year, the tax credit can be taken as the capital is expended, in accordance with the IRS' progress payments rule. Otherwise, it is taken when the asset is placed into service.

Under present tax law, equipment associated with hydrotreatment (i.e., the ammonia recovery unit) would not qualify for the 20% ITC and would only receive 10% ITC. This restriction was not taken into account in the calculations; however, had it been incorporated, the air pollution control cost would only be increased by about one cent per barrel under standard economic assumptions.

Income tax rate. A combined State and Federal tax rate of 48% was used. In practice, Colorado has a 5% tax rate, so the effective percentage rate should be: $5 + ([1 - 0.05] \times 46) = 48.7\%$. The error introduced by using 48% is negligible.

Depletion allowance. The Federal depletion allowance has not been incorporated into the calculation of taxes. The justification for this is as follows. The percentage depletion allowance is 15% on the "gross income" from an oil shale property. In this case, since the sales or transfer price of shale oil (and, hence, gross income) is independent of pollution control costs, the depletion allowance will not affect those costs. However, there is a limitation that the percentage depletion allowance cannot exceed 50% of the taxpayer's taxable income from the property, computed without allowance for depletion. Since pollution control costs reduce the taxable income, they could affect the depletion allowance if it was limited under the above rule, and this would then be a cost attributable to pollution control. While this might well be the case in a start-up year, it appears that this limit is unlikely to apply during a normal year's operation. This is because the complete project's total annual operating costs are a comparatively low proportion of its total annual control costs, including capital-related costs (Nutter and Waitman, 1978).

Hence, the impact of the Federal percentage depletion allowance on pollution control costs has been disregarded. This may introduce minor errors during start-up years, but complete project cost data are not publicly available to permit the effect to be calculated. Cost depletion, which might at times be taken instead of percentage depletion, is clearly irrelevant to pollution control costs.

Other Assumptions--

DCF ROR. Twelve percent (per year) was used as a standard assumption (see Section 6.3.2).

Project life. The expected project life (measured from the commencement of production) will be determined by exhaustion of the oil shale reserves or by technological obsolescence. Planned project lives used for evaluations of oil shale developments range from 18 to 30 years. Twenty years is a common period to use for economic evaluations and was used in this manual. Increasing the life has a very small effect on the results at normal DCF RORs (i.e., 12% or more).

Start-up profile. The start-up profile and normal year operating factor are based on projections for a TOSCO II plant (Nutter and Waitman, 1978). The operating (stream) factors are as follows: Year 1 - 50%, Year 2 - 75% and Years 3-20 - 90%.

Components of Annual Indirect Operating Costs--

The annual indirect operating cost is composed as follows:

Annual property tax and insurance allowance

+ Extra start-up costs (levelized)

- Severance tax credit (levelized)

- Annual by-product credit (if any).

Property tax and insurance allowance. The annual indirect operating cost includes 3% of the fixed capital cost as an allowance for property tax and insurance. This value was selected by DRI after review of a wide variety of sources.

Extra start-up cost. The total extra start-up cost (which is treated as an operating cost, as opposed to being capitalized) is derived from the fixed capital and direct annual operating costs. The capital-related component is 3% of the fixed capital cost as an allowance for "fix it" costs. The operating cost-related component, which is 20% of a normal year's direct operating cost, allows for hiring and training employees before production commences and for higher unit costs during the start-up period. This value for the extra start-up cost for surface retorting plants with a 2-year start-up period was selected by DRI after a review of several sources, including estimates for TOSCO II (Nutter and Waitman, 1978) and Paraho (Pforzheimer and Kunchal, March 24, 1977) plants. The extra start-up cost was assumed to be incurred during the first year of production but is levelized to spread it uniformly over every barrel of oil produced (see Sections 6.4.1 and 6.4.3).

Severance tax credit. Under Colorado HB 1076, enacted in 1977, severance tax is levied on the production of a commercial oil shale facility at the rate of 4% of the "gross proceeds" for surface retorted oil. "Gross proceeds" is defined as the value of the oil shale at the point of severance and is calculated by subtracting costs (e.g., retorting and mining) from the gross sales income. Since pollution controls add to costs, they reduce the gross proceeds by a corresponding amount. Hence, a credit for severance tax not paid should be deducted from the pollution control costs.

While operating costs are clearly allowable in calculating gross proceeds, return on capital does not appear to be (the statute refers to allowing "...costs, including direct and indirect expenditures for: (a) equipment and machinery...."). Hence, when this credit is calculated, the capital charge must be replaced by some form of amortization. For this analysis, the severance tax credit calculations are based on direct and indirect annual operating costs, plus 5% of the fixed capital cost to provide capital amortization over the 20-year project life.

In applying this credit, allowance was also made for exemptions to the tax for the first 10,000 barrels per day of production and for plants that have not achieved 50% of their design capacity, together with reduced rates of tax in the early years. The credit is levelized in order to achieve a uniform per-barrel cost. The methodology utilized (LFAC2 in Section 6.4.1) is not precise, but since the severence tax correction is typically less than 2% of the total annual or per-barrel control cost (see Section 6.2.4), further refinement is not justified.*

By-product credits. The by-product credit (if any) for each control is shown in Tables 6.3-4 and 6.3-5. (There are no salable by-products from solid waste management.) By-product values of $110 per ton for ammonia, $30 per long ton for sulfur, and $32 per barrel for oils were used.

At present, there is no significant market for sulfur in the Rocky Mountain Region; in the past, shipping costs to move recovered sulfur to a chemical complex could have been greater than its delivered value. However, the price of high quality sulfur has gone up substantially in recent years, reaching values as high as $129 per long ton (U.S. DOI, August 1981). High demand for sulfur is projected through the year 2000 (Rangnow and Fasullo, September 28, 1981). Hence, a nominal $30 per long ton has been included for recovered sulfur. However, if in the future a sulfuric acid plant and fertilizer complex are developed in the area, the values of by-product sulfur and ammonia would be raised.

The by-product value of $32 per barrel for recovered oil is lower than the selling price assumed for upgraded shale oil, which is $36 per barrel. Most of the by-product, or recovered oil, is likely to be recovered prior to upgrading, and $32 per barrel is a value appropriate for light shale oils that have not been upgraded.

Working Capital--

The working capital associated with a control was taken as one month's total operating cost plus three months' by-product credit. This is

---

* Since this analysis was conducted, the Colorado Legislature has amended the severance tax legislation pertaining to oil shale. While the basic rate for aboveground retorting is unchanged, the various exemptions discussed above are reduced. This will result in plants paying slightly more severance tax, which marginally increases the severance tax credit, thereby marginally (much less than 1%) reducing the pollution control cost.

equivalent to be one month's total operating cost disregarding the by-product credit, plus two months' by-product credit. Two months' by-product credit represents one month's inventory and one month's receivables. These values were selected by DRI after review of a variety of data sources.

Working capital is advanced in accordance with the direct annual operating cost plus the extra start-up cost, as follows:

	Operating (On-Stream) Factor	Output as % of Full Production	Operating Cost Relative to Full Production	Working Capital Increment
Year 1	50%	56%	76%	76%
Year 2	75%	83%	83%	7%
Year 3	90%	100%	100%	17%
				100%

Seventy-six percent is advanced in Year 1 because this includes the 20% extra start-up cost (56% + 20% = 76%). In Year 2, the operating cost increases from 76% to 83% of normal, hence 7% more working capital is required. A similar argument applies to Year 3, leading to a 17% working capital increment. All working capital is recovered in Year 20.

The working capital charge rate (RW) is calculated in a similar way to a fixed charge rate (see Sections 6.4.1 and 6.4.2). For 12% DCF ROR and normal project-timing assumptions, RW = 20.83%.

6.2.3 Solid Waste Management Costs

Throughout this manual a distinction is made between fixed capital costs and annual operating costs. The importance of this distinction is related to the treatment for determining income tax liability. Operating costs can be claimed as an expense in the year in which they are incurred, whereas a fixed capital cost must be depreciated over the period for which the asset is expected to be used. The effect of classifying a cost as an operating cost rather than a capital cost is to reduce the tax liability in any given year.

For air and water pollution controls, the distinction between fixed capital and annual operating costs is unequivocal. For solid waste management costs which are developed in the form of year-by-year cash flows (Table 6.1-5), the distinction is less clear. Costs that occur in only Year 1 or Years 1, 2 and 3 were treated as fixed capital costs, while those that continue for 15 or more years were considered as operating costs. Costs that occur at the end of the project (e.g., regevetation) were also treated as operating costs, since there is no remaining project life over which to depreciate them. In one case, monitoring wells, costs occur in Years 0, 10 and 19. Although by no means a clear-cut decision, this cost stream was treated as an operating cost.

Since the solid waste management operating costs are not proportional to production, they were "levelized" to transform them into equivalent direct

annual operating costs that are proportional to production, so that they can be treated in the same way as other direct annual operating costs. Levelizing involves determining the annual cost that is proportional to production and which has the same present value (for a given DCF ROR) as the irregular operating cost stream. Further explanation and an example are provided in Section 6.4.3. Costs designated as fixed capital were not levelized.

Table 6.2-3 presents the solid waste management fixed capital costs and direct annual operating costs (levelized at 12% DCF ROR) derived from Table 6.1-5.

6.2.4 Control Cost Example

Table 6.2-4 provides an example of the composition of the various elements of per-barrel control cost for a single major pollution control, the diethanolamine (DEA) unit. Per-barrel costs follow identical proportions to annual costs.

It can be seen that the fixed capital charge amounts to 39.3% of the total cost, whereas the working capital charge is only 1.1% of the total cost. It is interesting to note that the fixed capital charge is almost entirely return on equity, as the investment tax credit (20% of fixed capital cost) almost offsets the income tax liability over the project life when both are discounted at 12%, which is the specified DCF ROR. This illustrates the effect of the time-value of money, as the tax credit is given before production commences, whereas the regular tax liability is weighted toward the later years of the project.

For this particular control, the direct operating costs make up 51.9% of the total cost and are dominated by the charge for steam, although maintenance is significant. Several other controls have very large utility costs, which points up the need for sensitivity analysis (see Section 6.3.2) since unit values for utilities cannot be established with much certainty without knowing more about the entire plant.

The indirect operating costs amount to 7.7% of the total cost for this control, of which 7.3% results from the cost of property tax and insurance. Extra start-up costs and the severance tax credit are each about 2% of the total.

Except for the high cost of steam, these cost proportions for the DEA unit are typical of those for air and water pollution controls. However, for some controls, the indirect operating cost or even the per-barrel control cost can become negative where there is a significant by-product credit.

Water pollution control costs tend to be less capital-intensive, i.e., the the ratio of the total annual capital charge to the total annual operating cost is lower. This is because some controls have high utility costs.

Solid waste management costs are different in that they are basically either a fixed capital cost or a direct annual operating cost, but not both

TABLE 6.2-3. FIXED CAPITAL AND DIRECT ANNUAL OPERATING COSTS FOR SOLID WASTE MANAGEMENT

Activity	Fixed Capital Cost ($000's)	Direct Annual Operating Cost[a] ($000's/yr)
SURFACE HYDROLOGY		
Runoff Collection		155
Surface Cover		542
Upper Embankment	209[b]	
Lower Embankment	912[c]	
Runon Diversion	261[b]	
Stilling Basins		2
Water Impoundments	4,015[c]	
SUBSURFACE HYDROLOGY		
Bottom Liner		630
Shale Underdrain		5
Monitoring Wells		13
Groundwater Collection		13
SURFACE STABILIZATION		
Clear and Grub		75
Strip Topsoil		346
Dust Suppression		1,738
Reclamation and Revegetation		108

[a] The direct annual operating costs are levelized with respect to production at 12% DCF ROR.

[b] Spent in first year of production, Year 1.

[c] Spent uniformly in Years 1-3.

Source: DRI.

TABLE 6.2-4. PER-BARREL COST BREAKDOWN FOR DEA UNIT
(Standard Economic Assumptions, Case Study A)

Cost Category	Cents/Barrel		Percentage of Total	
Fixed Capital Charge				
Equity Return (12% ROR)	45.5		37.2	
Income Taxes Paid	11.7		9.5	
Investment Tax Credit	(9.1)		(7.4)	
		48.1		39.3
Working Capital Charge		1.3		1.1
Direct Operating Costs				
Maintenance	7.7		6.3	
Operating Supplies	0.7		0.6	
Operating Labor	1.0		0.8	
Cooling Water	--		--	
Steam	50.7		41.4	
Electricity	3.4		2.8	
		63.5		51.9
Indirect Operating Costs				
Taxes and Insurance	8.9		7.3	
Extra Start-up Costs	2.8		2.3	
Severance Tax Credit	(2.3)		(1.9)	
By-product Credit	--			
		9.4		7.7
TOTAL COST		122.3		100.0

Source: DRI.

for a given control. This reduces working capital and indirect annual operating costs, respectively, to essentially zero.

6.3 COST ANALYSIS RESULTS

The methodology used to develop the data presented in this section is identical to a complete discounted cash flow evaluation; that is, it solves for the per-barrel revenue required to provide the specified return on the investment (DCF ROR) associated with a control. This revenue requirement is known as the total annual or per-barrel control cost. The cost methodology is outlined in Section 6.2, and further details are provided in Section 6.4.1.

Two control items--proper maintenance of valves and pumps and the ammonia recovery unit--have relatively large by-product credits which lead to negative total annual costs (i.e., total annual cost credits). Although these items might consequently not be considered pollution controls, their costs have been included in the total cost of pollution control. The net credits associated with these items are a very small proportion of the total control costs (about 0.1% of the total air pollution control cost for proper maintenance of valves and pumps, and 4 to 10% of the total water pollution control cost for the ammonia recovery unit).

6.3.1 Results for Standard Economic Assumptions*

The term "standard economic assumptions" is used to describe the normal economic assumptions presented in Tables 6.2-1 and 6.2-2. The majority of these assumptions are in reasonable accord with normal engineering and economic evaluation practices. The most critical economic assumption is that of 12% required DCF ROR. This figure was adopted for the oil shale PCTMs and would be appropriate for a mature industry, but it is probably low for a pioneer plant at this time (see Sections 6.2.1 and 6.3.2 for a discussion of factors influencing the selection of a DCF ROR).

---

* As already mentioned, this analysis was developed prior to enactment of the Economic Recovery Tax Act of 1981. The rapid depreciation (ACRS) permitted by this act would significantly reduce the values of the fixed charge factors, especially for normal ("pass through") financing as opposed to stand-alone financing.

For standard economic assumptions, very rough estimates of the decreases in total annual control costs are as follows:

Air controls:	5% decrease on aggregate.
Water controls:	10% decrease on aggregate.
Solid waste mgt.:	little change.

As an alternative assumption, if the energy portion (10%) of the investment tax credit were allowed to expire at the end of 1982, the combined effect of this and ACRS would be to cause small increases in the total annual control costs.

Table 6.3-1 provides a summary of pollution control costs developed using the standard economic assumptions for each of the case studies considered in this manual. Table 6.3-2 provides additional detail based on the control groupings listed in Table 6.3-3.

Table 6.3-1 shows that the total investment in fixed capital for air pollution control equipment ranges from $91.8 million (Case Study C) to $106.4 million (Case Studies A and B), while the total air control cost ranges from $2.72 per barrel to $3.35 per barrel, respectively. Investment in fixed capital for water pollution control equipment ranges from $7.4 million (Case Study A) to $9.5 million (Case Study B). The water pollution control cost ranges from 12 cents per barrel (Case Study C) to 18 cents per barrel (Case Study B). Solid waste management requires $5.4 million in fixed capital and has a control cost of 29 cents per barrel.

Table 6.3-1 also compares the total cost of pollution control to an assumed $36 per-barrel value for upgraded shale oil.* For air pollution control, the proportion ranges from 7.6% (Case Study C) to 9.3% (Case Studies A and B). For water pollution control, the range is from 0.3% (Case Study C) to 0.4% (Case Study A). The total solid waste management cost for all case studies is 0.8% of the $36 per-barrel value of upgraded shale oil.

The works-gate value of $36 per barrel (mid-1980 dollars) for TOSCO II upgraded syncrude was based on three sources: a developer's estimate of $35 to $40 per barrel of upgraded syncrude, a study for the U.S. Department of Energy by Lester W. Scharmm (March 1980), and an MIT-Energy Laboratory report (Weiss, Ball and Barbara, June 1979). Scharmm concluded that upgraded shale oil can bring the same price as the best light, sweet, imported petroleum crudes. The 1980 price of such a petroleum crude was about $36. The MIT-Energy Laboratory report suggests that the cost of upgrading TOSCO II shale oil would be about $3.00 per barrel (in 1978 dollars) at a 12% rate of return and that the industry average cost would be about $4.00 per barrel (in 1978 dollars). Since the 1980 value of surface retorted shale oil was estimated to be $30 per barrel (used in the Lurgi-Open Pit PCTM), the MIT-Energy Laboratory data suggest that upgraded syncrude would have a 1980 value of about $34 per barrel. Considering all three data sources, a value of $36 per barrel was chosen for the price of upgraded shale oil.

It is generally anticipated that the real price of oil will increase in the future. Hence, the value of $36 may be considered to be a conservative estimate because it does not include any element of escalation relative to the general level of prices. For example, if oil prices were to escalate at only 2% per annum relative to general cost levels (which can be expected to include pollution control costs), the real value of upgraded shale oil would reach $53 per barrel (in mid-1980 dollars) by the year 2000, i.e., at the end of the 20-year project life.

---

* Other prices for the value of shale oil are used in the other oil shale PCTMs, reflecting quality differences.

TABLE 6.3-1. SUMMARY OF POLLUTION CONTROL COSTS FOR STANDARD ECONOMIC ASSUMPTIONS

Case Study	Fixed Capital Cost[a] ($000's)	Total Annual Capital Charge[b] ($000's/yr)	Total Annual Operating Cost ($000's/yr)	Total Annual Control Cost ($000's/yr)	Per-barrel Control Cost (cents/bbl)	Per-barrel Control Cost as a Proportion of Oil Value[c] (%)
Air Pollution Control						
A & B	106,400	18,093	33,586	51,679	335	9.3
C	91,760	15,499	26,489	41,988	272	7.6
Water Pollution Control						
A	7,385	1,519	425	1,944	13	0.4
B	9,451	1,862	916	2,778	18	0.5
C	7,595	1,570	308	1,878	12	0.3
Solid Waste Management						
A, B & C	5,397	691	3,800	4,492	29	0.8

[a] Does not include working capital.

[b] Includes charge for working capital.

[c] Assuming upgraded shale oil is valued at $36/barrel.

Source: DRI.

TABLE 6.3-2. POLLUTION CONTROL COSTS, BY CONTROL GROUP, FOR THE STANDARD ECONOMIC ASSUMPTIONS

Control Group[a]	Case Study A			Case Study B			Case Study C		
	Fixed Capital Cost[b] ($000's)	Total Annual Control Cost ($000's/yr)	Per-barrel Control Cost (cents/bbl)	Fixed Capital Cost[b] ($000's)	Total Annual Control Cost ($000's/yr)	Per-barrel Control Cost (cents/bbl)	Fixed Capital Cost[b] ($000's)	Total Annual Control Cost ($000's/yr)	Per-barrel Control Cost (cents/bbl)
Air Pollution Control									
Particulate Control	15,000	6,180	40	15,000	6,180	40	15,000	6,180	40
Retort Gas Treatment	66,640	23,931	155	66,640	23,931	155	52,000	14,240	92
Miscellaneous Air	24,760	21,568	140	24,760	21,568	140	24,760	21,568	140
TOTAL AIR	106,400	51,679	335	106,400	51,679	335	91,760	41,988	272
Water Pollution Control									
Condensate Treatment	5,929	1,085	7	7,995	1,919	12	6,139	1,017	6
Miscellaneous Water	1,456	859	6	1,456	859	6	1,456	861	6
TOTAL WATER	7,385	1,944	13	9,451	2,778	18	7,595	1,878	12
Solid Waste Management									
Surface Hydrology	5,397	1,513	10	5,397	1,513	10	5,397	1,513	10
Subsurface Hydrology	0	672	4	0	672	4	0	672	4
Surface Stabilization	0	2,307	15	0	2,307	15	0	2,307	15
TOTAL SOLID WASTE	5,397	4,492	29	5,397	4,492	29	5,397	4,492	29

[a] Refer to Table 6.3-3 for a listing of the items that are included in each control group.

[b] Does not include working capital.

Source: DRI.

TABLE 6.3-3. CONTROL GROUPINGS

Group Designation	Specific Controls
Air Pollution Control	
Particulate Control:	Fabric filters, dust suppression, high energy venturi scrubbers, venturi scrubbers.
Retort Gas Treatment:	DEA, Claus, Wellman-Lord, Stretford.
Miscellaneous Air:	Thermal oxidizers, low flare and thermal oxidizer, oil storage tanks, ammonia storage, proper maintenance of valves and pumps, diesel emission controls.
Water Pollution Control	
Condensate Treatment:	API oil/water separator, ammonia recovery unit, foul water strippers, bio-oxidation unit.
Miscellaneous Water:	River water clarifier,* boiler feed-water treatment,* cooling water treatment,* equalization pond, runoff oil/water separator.
Solid Waste Management	
Surface Hydrology:	Runoff collection, surface cover, upper embankment, lower embankment, runon diversion, stilling basins, water impoundments.
Subsurface Hydrology:	Bottom liner, shale underdrain, monitoring wells, groundwater collection.
Surface Stabilization:	Clear and grub, strip topsoil, dust suppression, reclamation and revegetation.

* These technologies could be considered as part of the process rather than pollution control.

Source: DRI.

Cost Details--

Full cost details for each control (using standard economic assumptions) are presented in Tables 6.3-4 through 6.3-6. As already noted, proper maintenance of valves and pumps and the ammonia recovery unit were found to have negative total annual costs. In these cases, the annual by-product credits were large enough to more than offset the total annual capital charges and total annual operating costs. These items were, nevertheless, incorporated into the control cost totals.

6.3.2 Sensitivity Analyses

This section explores the sensitivity of the results to changes in the engineering costs and economic assumptions. In general, only a single change from the standard economic assumptions was made in each case, enabling the impact of this change to be isolated. Table 6.3-7 summarizes the changes made for each case, while Table 6.3-8 displays the fixed and working capital charge rates used to calculate per-barrel control costs. Per-barrel pollution control costs for all case studies, expressed as a percentage of a $36 per-barrel upgraded shale oil value, are given in Table 6.3-9. Table 6.3-10 provides additional detail for the absolute per-barrel control costs and includes percentage changes from the standard economic assumptions. Comparative results for Case Study A for the various sensitivity analyses are presented graphically in Figures 6.3-1 and 6.3-2. Each sensitivity analysis is discussed below.

Twenty Percent Increase in Fixed Capital Costs--

Cost escalation is always a problem with pioneer plants because of the numerous uncertainties (Merrow, September 1978; Merrow, Chapel and Worthing, July 1979). A 20% increase is not at all unreasonable despite the inclusion of a 20% contingency in the standard economic assumptions.

Table 6.3-10 shows that the effect of a 20% increase in fixed capital costs varies significantly among the control groups. Those that are capital-intensive (such as retort gas treatment) show a greater percentage increase (11-14%) than those that are operating cost intensive (such as solid waste management--only 4%). Relative to results under the standard economic assumptions, the increase in total air pollution control cost is 8 to 9%, or 23 to 27 cents per barrel. The percentage increase in the total water pollution control cost is larger (14 to 16%), but the cost increase is quite small in absolute terms (2 cents per barrel). These results indicate that, in aggregate, the pollution controls are not highly capital-intensive.

Twenty Percent Increase in Operating Costs--

Operating costs are often better defined than capital costs, which is why an operating cost contingency is not normally included in the direct annual operating costs. However, there are many reasons why operating costs could be higher than anticipated. For example, regional shortages of skilled labor could result in higher wages and reduced productivity. Also, labor costs may escalate faster than other costs. Maintenance costs could be

TABLE 6.3-4. DETAILS OF AIR POLLUTION CONTROL COSTS, STANDARD ECONOMIC ASSUMPTIONS

Control Identification (No. of Units)	Fixed Charge Factor (%)	Fixed Capital Cost ($000's)	Working Capital ($000's)	Total Annual Capital Charge[a] ($000's/yr)	Direct Annual Op. Cost ($000's/yr)	Annual By-product Credit ($000's/yr)	Indirect Annual Op. Cost[b] ($000's/yr)	Total Annual Op. Cost ($000's/yr)	Total Annual Control Cost ($000's/yr)	Per-barrel Control Cost (cents)
CONTROLS COMMON TO ALL CASE STUDIES										
Fabric Filter (1)	18.70	381	3	72	20	--	12	32	104	0.7
Fabric Filter (1)	18.70	415	3	78	22	--	13	35	113	0.7
Fabric Filter (1)	18.70	44	<1	8	3	--	1	4	12	0.1
Fabric Filter (1)	18.70	450	4	85	28	--	14	42	127	0.8
Fabric Filters (4)	18.70	2,180	16	411	122	--	69	191	602	3.9
Fabric Filter (1)	18.70	310	2	58	17	--	10	27	85	0.6
Water and Foam Sprays	18.70	500	69	108	808	--	16	824	932	6.0
High Energy Venturi Scrubbers (6)	16.17	7,200	146	1,195	1,522	--	230	1,752	2,947	19.1
Venturi Scrubbers (6)	16.17	1,330	21	220	213	--	42	255	475	3.1
Venturi Scrubbers (6)	16.17	2,190	35	361	352	--	70	422	783	5.1
Subtotal Particulate Controls		15,000	299	2,596	3,107	--	477	3,584	6,180	40.1
Thermal Oxidizers (6)	16.17	23,120	1,434	4,037	16,462	--	743	17,205	21,242	137.6
Low Flare & Thermal Oxidizer (1)	16.17	810	2	131	--	--	26	26	157	1.0
Floating Roof Oil Storage Tanks (3)	15.61	350	3	55	--	12[c]	(1)	(1)	54	0.4
Ammonia Storage (2)	15.61	330	1	52	--	--	11	11	63	0.4
Maintenance, etc.	15.61	50	19	12	47	86[c]	(82)	(35)	(23)	(0.2)
Catalytic Converters	37.50	100	3	38	34	--	3	37	75	0.5
Subtotal Misc. Air Controls		24,760	1,462	4,325	16,543	98	700	17,243	21,568	139.7
CONTROLS USED IN CASE STUDIES A & B ONLY										
DEA (1)	16.17	45,900	939	7,618	9,804	--	1,464	11,268	18,886	122.3
Claus (1)	16.17	11,740	466	1,996	886	2,141[d]	(1,715)	(829)	1,167	7.6
Wellman-Lord (1)	16.17	9,000	492	1,558	3,199	1,196[e]	(879)	2,320	3,878	25.1
TOTAL AIR POLLUTION CONTROLS		106,400	3,658	18,093	33,539	3,435	47	33,586	51,679	334.8
CONTROL USED IN CASE STUDY C ONLY										
Stretford (1)	16.17	52,000	812	8,578	5,333	1,360[f]	329	5,662	14,240	92.2
TOTAL AIR POLLUTION CONTROLS		91,760	2,573	15,499	24,983	1,458	1,506	26,489	41,988	272.0

[a] Includes fixed and working capital charges. RW = 20.83%.

[b] Includes annual by-product credit.

[c] For shale oil at $32/barrel.

[d] $781,000 for steam at $3/MMBtu and $1,360,000 for sulfur at $30/long ton.

[e] For steam at $3/MMBtu.

[f] For sulfur at $30/long ton.

Source: DRI estimates based on data provided by SWEC.

TABLE 6.3-5. DETAILS OF WATER POLLUTION CONTROL COSTS, STANDARD ECONOMIC ASSUMPTIONS

Control Identification	Fixed Charge Factor (%)	Fixed Capital Cost ($000's)	Working Capital ($000's)	Total Annual Capital Charge[a] ($000's/yr)	Direct Annual Op. Cost ($000's/yr)	Annual By-product Credit ($000's/yr)	Indirect Annual Op. Cost ($000's/yr)	Total Annual Op. Cost[b] ($000's/yr)	Total Annual Control Cost ($000's/yr)	Per-barrel Control Cost (cents)
CASE STUDY A										
API Oil/Water Separator	16.17	140	1	23	3	--	5	8	31	0.2
Ammonia Recovery Unit	16.17	4,659	1,170	997	3,659	5,052[c]	(4,778)	(1,119)	(122)	(0.8)
Foul Water Stripper	16.17	1,130	81	200	940	--	36	976	1,176	7.6
Subtotal Condensate Treatment		5,929	1,252	1,220	4,602	5,052	(4,737)	(135)	1,085	7.0
River Water Clarifier[d]	21.64	788	11	173	110	--	25	135	308	2.0
Cooling Water Treatment[d]	16.17	--	2	1	28	--	<1	28	29	0.2
Boiler Feedwater Treatment[d]	16.17	491	32	86	372	--	16	388	474	3.1
Equalization Pond	21.64	150	1	33	2	--	5	7	40	0.3
Runoff Oil/Water Separator	21.64	27	<1	6	1	--	1	2	8	0.1
Subtotal Misc. Water		1,456	46	299	513	--	47	560	859	5.7
TOTAL WATER POLLUTION CONTROLS		7,385	1,298	1,519	5,115	5,052	(4,690)	425	1,944	12.7
CASE STUDY B										
API Oil/Water Separator	16.17	140	1	23	3	--	5	8	31	0.2
Ammonia Recovery Unit	16.17	4,659	1,170	997	3,659	5,052[c]	(4,778)	(1,119)	(122)	(0.8)
Foul Water Stripper	16.17	1,130	81	200	940	--	36	976	1,176	7.6
Bio-oxidation Unit	16.17	2,066	41	343	425	--	66	491	834	5.4
Subtotal Condensate Treatment		7,995	1,293	1,563	5,027	5,052	(4,671)	356	1,919	12.4
River Water Clarifier[d]	21.64	788	11	173	110	--	25	135	308	2.0
Cooling Water Treatment[d]	16.17	--	2	1	28	--	<1	28	29	0.2
Boiler Feedwater Treatment[d]	16.17	491	32	86	372	--	16	388	474	3.1
Equalization Pond	21.64	150	1	33	2	--	5	7	40	0.3
Runoff Oil/Water Separator	21.64	27	<1	6	1	--	1	2	8	0.1
Subtotal Misc. Water		1,456	46	299	513	--	47	560	859	5.7
TOTAL WATER POLLUTION CONTROLS		9,451	1,339	1,862	5,540	5,052	(4,624)	916	2,778	18.1

(Continued)

TABLE 6.3-5 (cont.)

Control Identification	Fixed Charge Factor (%)	Fixed Capital Cost ($000's)	Working Capital ($000's)	Total Annual Capital Charge[a] ($000's/yr)	Direct Annual Op. Cost ($000's/yr)	Annual By-product Credit ($000's/yr)	Indirect Annual Op. Cost[b] ($000's/yr)	Total Annual Op. Cost ($000's/yr)	Total Annual Control Cost ($000's/yr)	Per-barrel Control Cost (cents)
CASE STUDY C										
API Oil/Water Separator	16.17	140	1	23	3	--	5	8	31	0.2
Ammonia Recovery Unit	16.17	4,869	1,252	1,048	3,892	5,420[e]	(5,130)	(1,238)	(190)	(1.2)
Foul Water Stripper	16.17	1,130	81	200	940	--	36	976	1,176	7.6
Subtotal Condensate Treatment		6,139	1,334	1,271	4,835	5,420	(5,089)	(254)	1,017	6.6
River Water Clarifier[d]	21.64	788	11	173	110	--	25	135	308	2.0
Cooling Water Treatment[d]	16.17	--	3	1	30	--	<1	30	31	0.2
Boiler Feedwater Treatment[d]	16.17	491	32	86	372	--	16	388	474	3.1
Equalization Pond	21.64	150	1	33	2	--	5	7	40	0.3
Runoff Oil/Water Separator	21.64	27	<1	6	1	--	1	2	8	0.1
Subtotal Misc. Water		1,456	46	299	515	--	47	562	861	5.7
TOTAL WATER POLLUTION CONTROLS		7,595	1,380	1,570	5,350	5,420	(5,042)	308	1,878	12.3

[a] Includes fixed and working capital charges. RW = 20.83%.

[b] Includes annual by-product credit.

[c] $4,878,000/yr for ammonia at $110/ton and $174,000/yr for steam at $3/MMBtu.

[d] These technologies could be considered as part of the process rather than pollution control.

[e] $5,203,000/yr for ammonia at $110/ton and $217,000/yr for steam at $3/MMBtu.

Source: DRI estimates based on data provided by WPA.

TABLE 6.3-6. DETAILS OF SOLID WASTE MANAGEMENT COSTS, STANDARD ECONOMIC ASSUMPTIONS

Control Identification	Fixed Charge Factor (%)	Fixed Capital Cost ($000's)	Working Capital ($000's)	Total Annual Capital Charge* ($000's/yr)	Direct Annual Op. Cost ($000's/yr)	Indirect Annual Op. Cost ($000's/yr)	Total Annual Op. Cost ($000's/yr)	Total Annual Control Cost ($000's/yr)	Per-barrel Control Cost (cents)
SURFACE HYDROLOGY									
Runoff Collection	--	--	13	3	155	<1	155	158	1.0
Surface Cover	--	--	45	9	542	<1	542	552	3.6
Upper Embankment	12.49	209	1	26	--	7	7	33	0.2
Lower Embankment	11.51	912	2	106	--	29	29	135	0.9
Runon Diversion	12.49	261	1	33	--	8	8	41	0.3
Stilling Basins	--	--	<1	<1	2	<1	2	2	<0.1
Water Impoundments	11.51	4,015	11	464	--	128	128	592	3.8
Subtotal Surface Hydrology		5,397	73	641	699	172	871	1,513	9.8
SUBSURFACE HYDROLOGY									
Bottom Liner	--	--	53	11	630	<1	630	641	4.2
Shale Underdrain	--	--	<1	<1	5	<1	5	5	<0.1
Monitoring Wells	--	--	1	<1	13	<1	13	13	0.1
Groundwater Collection	--	--	1	<1	13	<1	13	13	0.1
Subtotal Subsurface Hydrology		--	55	11	661	<1	661	672	4.4
SURFACE STABILIZATION									
Clear and Grub	--	--	6	1	75	<1	75	76	0.5
Strip Topsoil	--	--	29	6	346	<1	346	352	2.3
Dust Suppression	--	--	145	30	1,738	1	1,739	1,769	11.5
Reclamation and Revegetation	--	--	9	2	108	<1	108	110	0.7
Subtotal Surface Stabilization		--	189	39	2,267	1	2,268	2,307	15.0
TOTAL SOLID WASTE CONTROLS		5,397	317	691	3,627	173	3,800	4,492	29.2

* Includes fixed and working capital charges. RW = 20.83%.

Note: There are no by-product credits.

Source: DRI estimates based on data provided by SWEC.

TABLE 6.3-7. ASSUMPTIONS FOR SENSITIVITY ANALYSES*

Sensitivity Analysis	DCF ROR	Fixed Capital Costs	Direct Operating Costs	By-product Credits	Solid Waste Operating Costs	Comments
+20% Fixed Capital Costs	12%	Increased 20%	SEA	SEA	SEA	
+20% Direct Operating Costs	12%	SEA	Increased 20%	SEA	SEA	
+66.7% Utilities Costs	12%	SEA	Utility portion increased 66.7%	Utility portion increased 66.7%	SEA	
80% of Planned Output	12%	SEA	Decreased 10%	Decreased 20%	SEA	
Delayed Start-up	12%	SEA	SEA	SEA	Levelized at 12% with 2-yr. delay	A 2-year delay was incorporated into the RC and RW calculations by halting production in Years 2 and 3 and resuming in Year 4. Project life was increased to 22 years.
15% DCF ROR	15%	SEA	SEA	SEA	Levelized at 15%	
Stand-alone Financing	12%	SEA	SEA	SEA	SEA	For RC and RW calculations, investment tax credit and depreciation earned in or before Year 3 were accumulated and taken as a lump sum in Year 3. The schedules after Year 3 remained unchanged.
Stand-alone Financing at 15% DCF ROR	15%	SEA	SEA	SEA	Levelized at 15%	
+20% Fixed Capital Costs, Delayed Start-up and 15% DCF ROR	15%	Increased 20%	SEA	SEA	Levelized at 15% with 2-yr. delay	A 2-year delay was incorporated into the RC and RW calculations by halting production in Years 2 and 3 and resuming in Year 4. Project life was increased to 22 years.
+20% Fixed Capital Costs, Delayed Start-up, 15% DCF ROR and Stand-alone Financing	15%	Increased 20%	SEA	SEA	Levelized at 15% with 2-yr. delay	A 2-year delay was incorporated into the RC and RW calculations as above, and the investment tax credit and depreciation were accumulated to Year 5.

*SEA indicates that the costs are the same as those used for analysis based on standard economic assumptions.

Source: DRI.

TABLE 6.3-8. CHARGE RATES FOR SENSITIVITY ANALYSES

	Standard Economic Assumptions	Sensitivity Analyses: +20% Fixed Capital Costs	+20% Direct Operating Costs	+66.7% Utilities Costs	80% of Planned Output	Delayed Start-up	15% DCF ROR	Stand-alone Financing	Stand-alone Financing at 15% DCF ROR	Combined Assumptions[a]	Combined Assumptions with Stand-alone Financing[a]
Fixed Charge Rate[b]											
Retort Timing	16.17	16.17	16.17	16.17	16.17	19.92	20.92	18.52	24.31	26.94	33.92
Mine Timing	18.70	18.70	18.70	18.70	18.70	23.03	24.79	21.67	29.14	31.91	40.13
Early Water Management	21.64	21.64	21.64	21.64	21.64	26.66	30.01	31.19	44.86	38.63	61.45
Ammonia/Hydrocarbon Controls	15.61	15.61	15.61	15.61	15.61	19.23	20.06	17.81	23.23	25.82	32.53
Catalytic Converters	37.50	37.50	37.50	37.50	37.50	41.78	46.06	44.53	56.36	53.34	70.83
Solid Waste (Year 1)	12.49	12.49	12.49	12.49	12.49	15.39	15.60	12.65	15.87	20.08	23.64
Solid Waste (Years 1,2,3)	11.51	11.51	11.51	11.51	11.51	11.06	13.99	12.00	14.69	13.74	20.57
Working Capital Charge Rate	20.83	20.83	20.83	20.83	20.83	20.96	25.58	20.83	25.58	25.80	25.80

[a] Combined assumptions are 20% increase in capital costs, 15% DCF ROR and delayed start-up.

[b] Refer to Table 6.2-2 for pollution controls included in each category.

Source: DRI.

TABLE 6.3-9. SENSITIVITY ANALYSES EXPRESSED AS A PERCENTAGE OF SHALE OIL VALUE

	Per-barrel Control Cost as a Percent of $36/Barrel Shale Oil Value					
	Air		Water			Solid Waste
Sensitivity Analysis	A, B	C	A	B	C	All Cases
Standard Economic Assumptions	9.3	7.6	0.3	0.5	0.3	0.8
+20% Fixed Capital Costs	10.0	8.2	0.4	0.6	0.4	0.8
+20% Direct Operating Costs	10.5	8.5	0.5	0.7	0.5	0.9
+66.7% Utilities Costs	12.4	10.2	0.7	0.9	0.8	0.8
80% of Planned Output	11.0	8.9	0.5	0.7	0.5	0.9
Delayed Start-up	10.0	8.2	0.4	0.6	0.4	0.8
15% DCF ROR	10.3	8.4	0.4	0.6	0.4	0.8
Stand-alone Financing	9.8	7.9	0.4	0.5	0.4	0.8
Stand-alone Financing at 15% DCF ROR	11.0	9.0	0.5	0.7	0.5	0.9
Combined Assumptions*	12.6	10.4	0.6	0.8	0.6	0.9
Combined Assumptions with Stand-alone Financing*	14.2	11.8	0.7	1.0	0.7	1.0

* Combined assumptions are 20% increase in fixed capital costs, 15% DCF ROR and delayed start-up.

Source: DRI.

TABLE 6.3-10. SENSITIVITY ANALYSES BY CONTROL GROUP

Media and Control Group	Standard Economic Assumptions ¢/bbl	20% Increase in Fixed Capital Costs ¢/bbl	% Change	20% Increase in Direct Operating Costs ¢/bbl	% Change	66.7% Increase in Utilities Costs ¢/bbl	% Change	80% of Planned Output ¢/bbl	% Change	Delayed Start-up ¢/bbl	% Change
AIR POLLUTION CONTROL											
Particulate and Misc. Air Controls											
All Case Studies	180	190	+5.7	206	+14.4	261	+45.1	209	+16.3	190	+5.5
Retort Gas Treatment											
Case Studies A & B	155	172	+10.8	173	+11.8	186	+20.3	188	+21.0	171	+10.5
Case Study C	92	105	+14.2	99	+7.6	106	+14.6	113	+22.6	105	+13.7
TOTAL AIR, CASE STUDIES A & B	335	362	+8.0	379	+13.2	447	+33.6	397	+18.5	361	+7.8
TOTAL AIR, CASE STUDY C	272	295	+8.6	305	+12.1	367	+34.8	322	+18.4	294	+8.3
WATER POLLUTION CONTROL											
Case Study A	13	15	+15.3	19	+53.6	27	+114.1	19	+52.8	14	+14.9
Case Study B	18	20	+13.6	25	+40.6	32	+80.6	26	+42.5	20	+13.2
Case Study C	12	14	+16.2	19	+58.0	27	+123.4	19	+56.7	14	+15.9
SOLID WASTE MANAGEMENT											
All Case Studies	29	30	+3.6	34	+16.5	29	0.0	33	+15.0	29	+0.7

(Continued)

TABLE 6.3-10 (cont.)

Media and Control Group	Standard Economic Assumptions ¢/bbl	15% DCF ROR ¢/bbl	15% DCF ROR % Change	Stand-alone Financing ¢/bbl	Stand-alone Financing % Change	Stand-alone Financing at 15% DCF ROR ¢/bbl	Stand-alone Financing at 15% DCF ROR % Change	Combined Assumptions* ¢/bbl	Combined Assumptions* % Change	Combined Assumptions with Stand-alone Financing* ¢/bbl	Combined Assumptions with Stand-alone Financing* % Change
AIR POLLUTION CONTROL											
Particulate and Misc. Air Controls											
All Case Studies	180	194	+7.8	186	+3.5	203	+12.9	225	+25.5	248	+37.7
Retort Gas Treatment											
Case Studies A & B	155	177	+14.1	165	+6.5	192	+23.6	229	+47.8	265	+71.1
Case Study C	92	109	+18.1	100	+8.6	120	+30.5	150	+62.2	178	+92.8
TOTAL AIR, CASE STUDIES A & B	335	371	+10.7	351	+4.9	394	+17.8	455	+35.8	513	+53.2
TOTAL AIR, CASE STUDY C	272	303	+11.3	286	+5.2	323	+18.8	375	+37.9	425	+56.4
WATER POLLUTION CONTROL											
Case Study A	13	16	+24.6	14	+10.3	18	+39.5	22	+73.1	26	+108.7
Case Study B	18	22	+20.9	20	+9.0	24	+33.9	29	+63.9	35	+94.9
Case Study C	12	15	+26.2	13	+10.9	17	+41.9	22	+77.6	26	+115.5
SOLID WASTE MANAGEMENT											
All Case Studies	29	30	+4.8	29	+0.6	31	+5.6	32	+10.3	35	+19.8

* Combined assumptions are 20% increase in capital costs, 15% DCF ROR and delayed start-up.

Source: DRI.

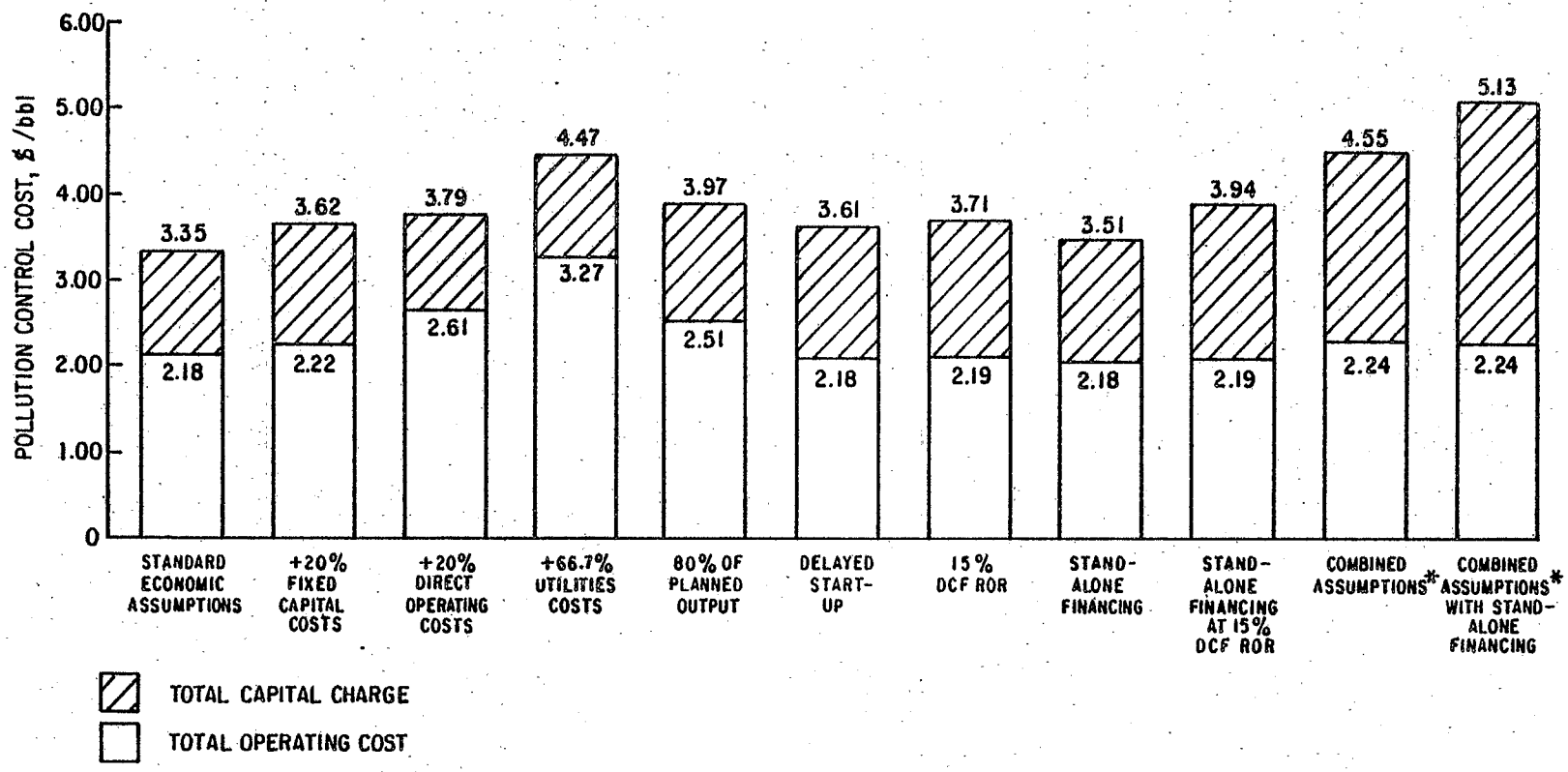

* COMBINED ASSUMPTIONS ARE 20% INCREASE IN FIXED CAPITAL COSTS, 15% DCF ROR AND DELAYED START-UP
SOURCE: DRI

FIGURE 6.3-1 SENSITIVITY ANALYSES FOR CASE STUDY A: TOTAL AIR POLLUTION CONTROL COSTS

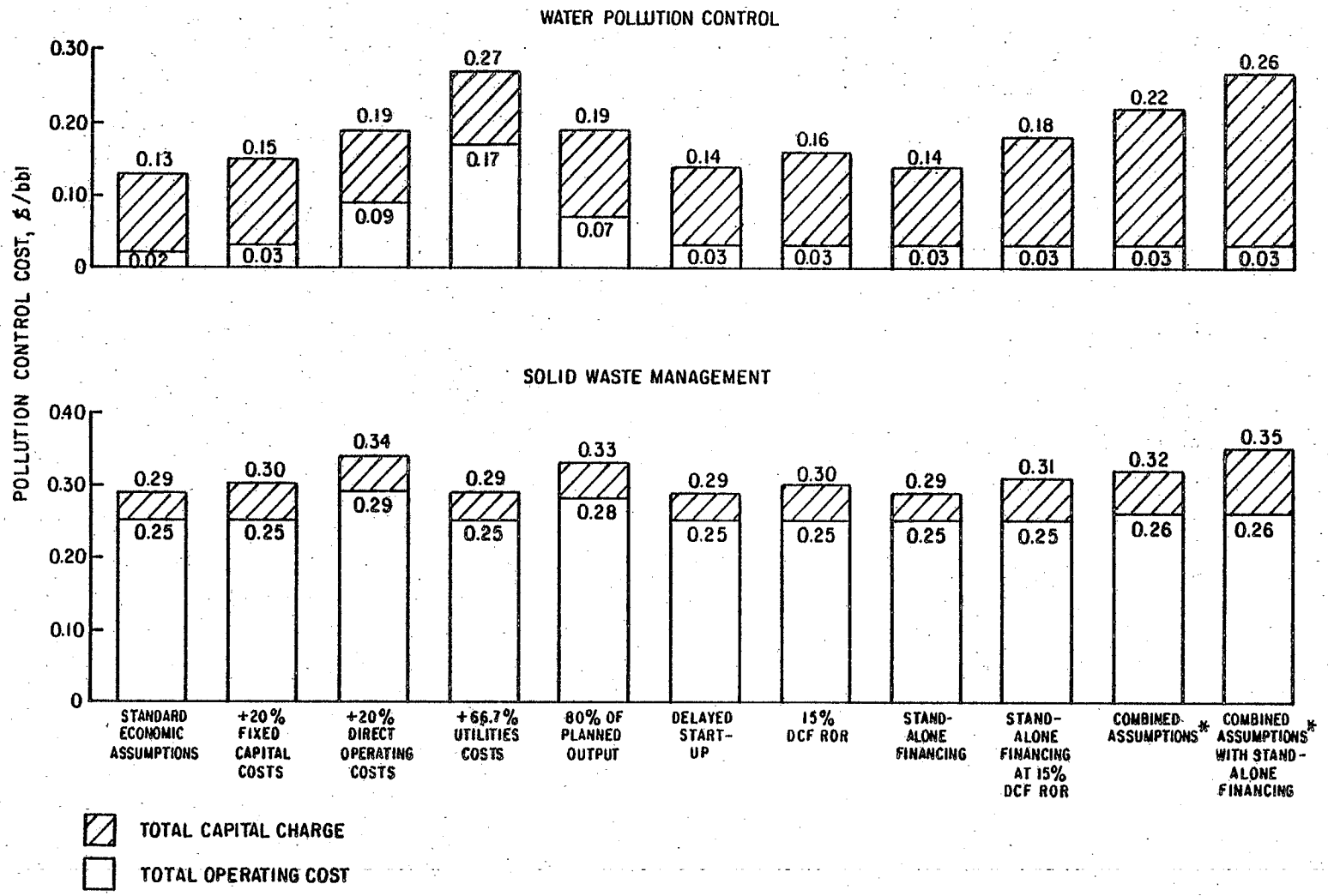

* COMBINED ASSUMPTIONS ARE 20% INCREASE IN FIXED CAPITAL COSTS, 15% DCF ROR AND DELAYED START-UP

SOURCE: DRI

FIGURE 6.3-2 SENSITIVITY ANALYSES FOR CASE STUDY A: TOTAL WATER POLLUTION CONTROL AND SOLID WASTE MANAGEMENT COSTS

higher than expected, and both utility requirements and utility unit costs could deviate from expectations.

The effect of a 20% increase in operating cost is, in general, somewhat greater than that of the same-sized increase in capital cost. For a 20% increase, although air pollution control is only increased by 11 to 12%, solid waste and water pollution control increase by 17% and 41 to 58%, respectively. The surprisingly large percentage increase for water pollution control occurs because under standard economic assumptions the direct operating cost is only slightly larger than the by-product credit. The actual increases for water are only 6 or 7 cents per barrel compared with 33 to 44 cents per barrel for air and 5 cents per barrel for solid waste, however.

Gas treatment costs for Case Study C increase by only 8% (as compared with 12% for Case Studies A and B) due to the less operating cost-intensive nature of the Stretford gas treatment system used. Comparing the results of this analysis with the results for the same-sized increase in fixed capital costs confirms that the water pollution controls and solid waste management are very operating cost-intensive, whereas the air pollution controls are comparatively capital-intensive.

66.7% Increase in Utilities Costs--

Operation of various controls requires inputs of electricity, steam, fuel gases and oil. Under standard economic assumptions, electricity is valued at 3 cents per kW-hr and it is assumed that both steam and fuel gases are purchased at a price of $3/MMBtu. The electricity charge of 3 cents per kW-hr may very likely underestimate the true cost of purchased power from the grid (should this prove necessary) as it is a compromise value between plants that can sell power and those that must purchase power (see Section 6.1.1). Since the TOSCO II plant is likely to require electricity from outside sources, a 5 cents per kW-hr rate (a 66.7% increase) was considered. At the same time, steam and fuel gases prices were also increased by 66.7%, as the $3/MMBtu standard rate for these inputs may also prove to be conservative. Three dollars per million Btu is a typical 1980 value used for heat inputs in engineering studies, but no detailed cost evaluation was conducted for this manual. Hence, both the steam cost and the cost of fuel gases must be considered uncertain. Note, however, that the costs of fuel oil ($32/bbl) and cooling water were not changed, as these costs are subject to less uncertainty than electricity, steam and fuel gases.

The results confirm that utility costs constitute a major component of pollution control costs. For example, particulate and miscellaneous air control costs increase by 81 cents (a 45% increase). This increase largely reflects the major quantities of fuel gases used to operate the thermal oxidizers for shale preheating. Costs for other controls requiring large inputs of steam or electricity also increase greatly. Retort gas treatment costs for Case Studies A and B increase 20% (due largely to steam, fuel gases, and electricity required to operate the DEA unit and Wellman-Lord system). The 66.7% increase in the cost of steam and, to a lesser extent, the 66.7% increase in the cost of electricity cause water pollution control

costs to increase by 14 to 15 cents per barrel (or 81 to 123%) for all three case studies. Steam costs make up the major part of the operating costs for the ammonia recovery unit and foul water strippers.

Overall increases in air pollution control cost range from 34 to 35%, and total control costs reach $3.67 to $4.47 per barrel, with Case Study C remaining the lowest cost option. The total water pollution control cost ranges from 27 to 32 cents per barrel, approximately double the cost for standard economic assumptions. These severe increases in total costs suggest that a more accurate determination of utilities costs would be desirable. Solid waste management costs are unaffected by an increase in utilities costs.

Eighty Percent of Planned Output--

A frequent problem with pioneer process plants is that they fail to achieve their planned output. Occasionally they produce more. When a plant fails to reach its planned output, the fixed capital charges must be spread over reduced output, and the operating costs decrease by a lesser proportion than the output because some components (such as maintenance) are virtually unchanged.

For the case of a plant that achieves only 80% of planned output, it was assumed that direct annual operating costs fall to 90% of the full production costs. Production in the start-up years and by-product credits were prorated to 80% of the standard values.

Overall, the results are moderately severe, as the solid waste management cost increases by 15% (4 cents per barrel) and retort gas treatment increases by 21 to 23 percent. Total air pollution control costs increase by roughly 18%, or 50 to 62 cents per barrel, with Case Study C having the lowest cost and increase. Total water pollution control costs increase between 43 and 57%, or by 6 to 8 cents per barrel.

Delayed Start-up--

Because of the time-value of money implicit in the discounting procedure, anything that delays or curtails production raises capital charges and, hence, the per-barrel control cost; conversely, anything that accelerates or extends production reduces the costs.

For this analysis, production is halted for two years (Years 2 and 3) and then follows the normal build-up profile displaced by two years. (The project life is extended by 2 years to 22 years.) This profile corresponds to the scenario that the plant initially starts production according to schedule; then, at the end of Year 1, the plant is closed down because serious operational problems have developed and must be solved, which takes two years.

The effects of this case are comparatively mild. Total costs increase by about 8% (22 to 26 cents per barrel) for air pollution control and 13 to 16% (1 to 2 cents per barrel) for water pollution control. Once again, the

more capital-intensive control categories (such as retort gas treatment) show the largest individual increases. Solid waste management shows only a tiny increase (1%) because there is very little capital involved in solid waste pollution control.

Fifteen Percent DCF ROR--

The minimum acceptable DCF ROR used in a project feasibility study is normally not divulged by developers and, in any event, is influenced by alternative investment opportunities and other factors. However, there is broad confirmation that a rate between 12 and 15% per annum (in constant dollars) is appropriate for evaluating oil shale investments (Denver Research Institute, et al., July 1979; also see Merrow, September 1978). This ROR, which is called a "hurdle rate," is higher than the return that a company actually earns on its capital for a number of reasons. First, it is an unfortunate fact of life that many projects earn less than the projected rate of return because things do not work out as expected. This is only partly offset by the few projects that do better than anticipated. Second, project evaluations do not usually include such costs as R and D, exploration, and reserve acquisition; also, they may not include recovery of some general corporate expenses.

The single most important factor that influences the required DCF ROR is the perceived riskiness of the project. A high risk project is expected to pass a higher ROR hurdle than a low risk project. Some of the types of risks that might be subjectively taken into account in selecting a minimum acceptable ROR for a mining project in the U.S. include:

- Unproven technology (and, hence, uncertain equipment costs);
- Geologic uncertainty;
- Very large investments in relationship to total corporate assets;
- Rapid inflation in some cost components;
- Long construction and start-up periods;
- Market uncertainty;
- Regulatory uncertainty (leading to delays or added costs); and
- Difficult working conditions or adverse socioeconomic impacts leading to manpower problems.

For any first generation commercial synfuel plant, all the above factors are present, with the possible exception of geologic uncertainty. At this time, most of these factors are strongly present in oil shale projects. The standard economic assumption is 12% DCF ROR, which is probably the lowest acceptable return for a private enterprise shale oil plant with proven technology. For a pioneer plant, industry is likely to require at least 15% DCF ROR, unless it wishes to "buy into" a new industry. Of course, if another party (e.g., the Federal government) were prepared to share the risk in some way, the required ROR would be reduced. Even though some of the risks listed above do not apply to pollution controls, industry does not

perceive environmental costs to be separable from the entire project. Hence, all components of a project, including pollution controls, must earn the specified DCF ROR.

Increasing the required DCF ROR from 12 to 15% has a moderate effect on the costs. As expected, capital-intensive controls are those most affected: for example, the retort gas treatment costs rise by 14 to 18 percent. Total air pollution control costs increase by about 11% (31 to 36 cents per barrel). Total water pollution control costs increase by 21 to 26% (3 to 4 cents per barrel). Solid waste management costs are increased only slightly (by 5%, or 1 cent per barrel).

Stand-alone Financing--

The term "stand-alone financing" is used to describe a project in which tax credits and allowances for depreciation cannot be passed through to a parent company (or companies) which can benefit from them immediately. (These benefits are treated as negative income tax in conducting the alternative "pass-through" form of project evaluation which is used under standard economic assumptions.) Instead, it is necessary for the project to become profitable before the tax benefits can be obtained. It is difficult to determine when this might occur because it requires a detailed knowledge of the overall project economics; in any event, the timing of the benefits will be affected by the selling price of the shale oil. However, it is known that some of the developers are assuming stand-alone financing for their evaluations since it more closely reflects their tax positions than does pass-through financing.

To determine the approximate effect of substituting stand-alone financing for pass-through financing, it was assumed that no investment tax credit or depreciation could be claimed until the third year of production, i.e., the first year of full output. This assumption was based on examination of the cash flow analysis for a room-and-pillar mine with surface retort (of unspecified technology) presented in a recent oil shale tax study (Peat, Marwick, Mitchell & Co., September 1980). It must be emphasized that this assumption is very simplistic (and probably conservative), since the relevant details in the tax study were significantly different from those assumed in this manual. The overall effect is to increase total air pollution control costs by only about 5% (14 to 16 cents per barrel) and total water pollution control costs by 9 to 11% (1 or 2 cents per barrel). Solid waste management costs were barely changed. A more refined calculation might yield substantially greater increases, especially if a low value was used for the price of shale oil, thereby reducing profitability.

The effect of stand-alone financing was also evaluated at 15% DCF ROR, using the same assumptions as above. This probably comes closer to a developer's evaluation. In this case, the increase in total costs is significant, ranging from 51 to 59 cents per barrel (18 to 19%) for air pollution controls and 5 to 6 cents per barrel (34 to 42%) for water pollution controls. Solid waste management costs again showed little change, up by only 5.6%, or 2 cents per barrel.

Combined Cases--

Two combined cases were evaluated using the components already discussed. However, it is not sufficient to construct these analyses by simply combining the results from the earlier findings, so new analyses were developed. The two cases are as follows:

Combined assumptions

- 20% increase in fixed capital costs
- Delayed start-up
- 15% DCF ROR
- Everything else as standard economic assumptions.

Combined assumptions with stand-alone financing

- 20% increase in fixed capital costs
- Delayed start-up
- 15% DCF ROR
- Stand-alone financing
- Everything else as standard economic assumptions.

These combined cases are intended to be quite plausible adverse scenarios (i.e., 20% increase in fixed capital costs and delayed start-up) looked at from industry's viewpoint (i.e, 15% DCF ROR, with or without stand-alone financing, depending on the company).

The results indicate that these cases would impose significant burdens on industry. The most capital-intensive control group (retort gas treatment, Case Study C) increases in cost by 62% for pass-through financing and by 93% for stand-alone financing. Water pollution control costs increase by greater percentages, but as explained earlier, this result is misleading because of the presence of a large, unchanged by-product credit.

Overall, the increase in total air pollution control cost ranges from 36 to 38% for the regular (pass-through) case and from 53 to 56% for the stand-alone case. Water pollution control costs rise from 64 to 78% for the regular case and 95 to 116% for the stand-alone case. The smallest increases are for solid waste management at 10 and 20%, respectively. For the regular (pass-through) case, the absolute level of pollution control costs ranges from $3.75 to $4.55 per barrel for air controls, 22 to 29 cents for water pollution control, and is 32 cents per barrel for solid waste management. For the combined assumptions with stand-alone financing, absolute control costs are $4.25 to $5.13 for air, 26 to 35 cents for water, and 35 cents per barrel for solid waste.

Summary--

Returning to Table 6.3-9, it can be seen that total air pollution control costs are roughly 8% of the assumed $36 per-barrel value for upgraded shale oil under the standard economic assumptions. Total water pollution control costs are roughly 0.4% of the value of the oil and solid waste management costs are 0.8 percent.

With respect to air pollution controls, only the utilities cost analysis and the combined assumptions analyses produce major increases in cost. A 66.7% increase in utilities costs increases total per-barrel costs to between 10.2 and 12.4% of the shale oil value. For combined assumptions, air control costs increase to between 10.4 and 12.6% of the oil value, while for combined assumptions with stand-alone financing, the control costs range from 11.8 to 14.2% of the oil value. In all instances, Case Study C remains the lowest cost option.

Although much smaller than air pollution control costs, water pollution control costs also proved to be quite sensitive to increases in utilities costs. The 66.7% increase in utilities costs causes water control costs roughly to double and rise to between 0.7 and 0.9% of the oil value. This increase can be attributed to the large quantities of steam required for ammonia recovery and foul water stripping. Case Study B records the highest water pollution control cost under the standard economic assumptions and for all of the sensitivity analyses, due to the use of biological oxidation. For the combined assumptions with stand-alone financing, total control costs for Case Study B increase to 1.0% of the oil value. Water pollution control costs for Case Studies A and C remain virtually identical, and reach 0.8% of the shale oil value.

Solid waste management costs show very little variance in response to the sensitivity analyses performed. From a base of 0.8% of the shale oil value under standard economic assumptions, solid waste costs rise no higher than to 1.0% of the oil value (for the combined assumptions with stand-alone financing). Solid waste management costs are not capital cost-intensive and are thus virtually unaffected by many of the sensitivity analyses.

In no case for any of the three media do the cost rankings change among case studies; this is because there is very little difference among case studies in the way in which the costs are distributed between capital and operating components.

Figures 6.3-1 and 6.3-2 split the pollution control costs into a per-barrel total capital charge and a per-barrel total operating cost. These figures effectively illustrate the response of capital-intensive controls (air) vs. operating cost-intensive controls (solid waste and water) to the different sensitivity analyses.

6.4 DETAILS OF COST ANALYSIS METHODOLOGY

6.4.1 Cost Algorithms

This section provides the algorithms used to calculate total annual and per-barrel control costs and capital charge factors.

Calculation of Total Annual and Per-barrel Control Costs--

The total annual control cost (TC) of each item considered for pollution control is the sum of the total annual operating cost (TOC) and the total annual capital charge (CC). That is:

$$TC = TOC + CC$$

and $$TOC = DOC + IOC$$

where:
DOC = Direct annual operating cost
IOC = Indirect annual operating cost

and $$CC = (FCC \times RF) + (WC \times RW)$$

where:
FCC = Fixed capital cost
WC = Working capital
RF = Fixed charge factor
RW = Working capital charge factor

The cost per barrel (CPB) is the total annual cost divided by the normal annual production, i.e.:

$$CPB = TC \div (BPSD \times 328.5)$$

where: BPSD = Barrels per stream day

The factor, 328.5, is the number of normal operating days per year.

The derivation of each cost component is explained below.

Direct annual operating cost. DOC is a data input derived from the engineering cost analysis. It is the annual cost for a normal year and is taken from one of the data Tables 6.1-1 through 6.1-4 or 6.2-3.

Indirect annual operating cost. The indirect annual operating cost (IOC) is calculated as follows:

$$IOC = TIA + ESC - STC - BP$$

where:
TIA = Annual property tax and insurance allowance
ESC = Annual extra start-up costs (levelized--see below)
STC = Annual severance tax credit (levelized--see below)
BP = Annual by-product credit

BP is an input generated from stream data and shown in one of the tables in Section 6.3, and:

$$TIA = 0.03 \times FCC$$

$$ESC = (0.03 \times FCC + 0.20 \times DOC) \times LFAC1$$

$$STC = 0.04 \times [(DOC + ESC + TIA - BP) + 0.05 \times FCC] \times LFAC2$$

LFAC1 and LFAC2 are levelizing factors that spread ESC and STC uniformly over all units of production. LFAC2 also makes adjustments for the severance tax exemptions allowed for low production. These factors are as follows:

$$LFAC1 = \frac{(1 + r)^{-1}}{\frac{0.56}{1 + r} + \frac{0.83}{(1 + r)^2} + \sum_{n=3}^{20} \frac{1}{(1 + r)^n}}$$

$$= \frac{(1 + r)^{-1}}{\frac{0.56}{1 + r} + \frac{0.83}{(1 + r)^2} + \frac{(1 + r)^{-2} - (1 + r)^{-20}}{r}}$$

$$LFAC2 = \frac{BPSD - 10{,}000}{BPSD} \times$$

$$\frac{\frac{1}{4} \times \frac{0.83}{(1 + r)^2} + \frac{1}{2} \times \frac{1}{(1 + r)^3} + \frac{3}{4} \times \frac{1}{(1 + r)^4} + \frac{(1 + r)^{-4} - (1 + r)^{-20}}{r}}{\frac{0.56}{1 + r} + \frac{0.83}{(1 + r)^2} + \frac{(1 + r)^{-2} - (1 + r)^{-20}}{r}}$$

where: r = Discount rate = DCF ROR
BPSD = Barrels per stream day (i.e., normal daily output)

A numerical example of a levelizing calculation is given in Section 6.4.3.

Capital costs. Fixed capital cost (FCC) is an input taken from one of the data tables. Working capital (WC) is calculated as follows:

$$WC = 1/12 \times TOC + 1/4 \times BP$$

Capital Charge Factors--

The fixed charge factor equation is:

$$RF = \frac{\sum_{n=J}^{N} [(1 + r)^{-n} \times (K_n - T \times D_n - C_n)]}{(1 - T) \sum_{n=1}^{N} [(1 + r)^{-n} O_n]}$$

where:

K_n = Capital expenditure in year n ($\Sigma K_n = 1.000$)

C_n = Investment credit in year n

D_n = Depreciation in year n

O_n = Operating income in year n ($O_n = 1.000$ in a normal year)

r = Discount Rate = DCF ROR

T = Tax rate

N = Last year of project

J = First year of project (i.e., -3)

Note that the first year of production is Year 1.

The same equation is used to determine the working capital charge factor (RW), except that the D_n and C_n terms are omitted.

6.4.2 Example Calculation of a Fixed Charge Factor

Table 6.4-1 provides an example of the calculation of a fixed charge factor. The data used are for retort timing, using standard economic assumptions (see Table 6.2-2).

The following is an explanation of the calculations in the table. Expenditures are shown negative, while income (and taxes avoided) is shown positive. Column [2] is a schedule of capital expenditures to be made over a three-year period, totaling an arbitrary $1,000. (Unit value is used instead of $1,000 in the equation above.) Columns [3], [4], and [5] deal with allowances associated with this capital expenditure. Column [3] is a schedule of depreciation, commencing in Year 1 when the asset is placed into service. Column [4] gives the value of the depreciation allowed to the company. This value is the income tax not incurred as a consequence of the depreciation deduction, and it is 48% of Column [3]. Column [5] is the 20% investment tax credit available in each year a capital expenditure is made. (This is a direct credit against tax and does not have to be multiplied by the tax rate.)

Column [6] represents the income stream resulting from the $1,000 investment (Column [2]). Income in a normal, full production year is designated by "1.00x." Since income is proportional to production, and production in the start-up years is less than full production, the first two

TABLE 6.4-1. EXAMPLE OF FIXED CHARGE FACTOR CALCULATION
(Standard Economic Assumptions, Retort Timing)

		Allowances			Operating Income			Net Present Values			
Year [1]	Gross Capital [2]	Depreciation Amount [3]	Depreciation Value @ 48% Tax [4]	Investment Tax Credit [5]	Gross [6]	Net After 48% Tax [7]	Discount Factors at 12% [8]	After-tax Income* [9]	Depreciation Allowance [10]	Investment Tax Credit [11]	Capital [12]
-2	(100.00)	0.00	0.00	20.00	0.00x	0.00x	1.2544	0.0000x	0.00	25.09	(125.44)
-1	(300.00)	0.00	0.00	60.00	0.00x	0.00x	1.1200	0.0000x	0.00	67.20	(336.00)
0	(600.00)	0.00	0.00	120.00	0.00x	0.00x	1.0000	0.0000x	0.00	120.00	(600.00)
1	0.00	117.65	56.47	0.00	0.56x	0.291x	0.8929	0.2600x	50.42	0.00	0.00
2	0.00	110.29	52.94	0.00	0.83x	0.432x	0.7972	0.3441x	42.20	0.00	0.00
3	0.00	102.94	49.41	0.00	1.00x	0.520x	0.7118	0.3701x	35.17	0.00	0.00
4	0.00	95.59	45.88	0.00	1.00x	0.520x	0.6355	0.3305x	29.16	0.00	0.00
5	0.00	88.24	42.36	0.00	1.00x	0.520x	0.5674	0.2951x	24.03	0.00	0.00
6	0.00	80.88	38.82	0.00	1.00x	0.520x	0.5066	0.2634x	19.67	0.00	0.00
7	0.00	73.53	35.29	0.00	1.00x	0.520x	0.4523	0.2352x	15.97	0.00	0.00
8	0.00	66.18	31.77	0.00	1.00x	0.520x	0.4039	0.2100x	12.83	0.00	0.00
9	0.00	58.82	28.23	0.00	1.00x	0.520x	0.3606	0.1875x	10.18	0.00	0.00
10	0.00	51.47	24.71	0.00	1.00x	0.520x	0.3220	0.1674x	7.95	0.00	0.00
11	0.00	44.12	21.18	0.00	1.00x	0.520x	0.2875	0.1495x	6.09	0.00	0.00
12	0.00	36.76	17.64	0.00	1.00x	0.520x	0.2567	0.1335x	4.53	0.00	0.00
13	0.00	29.41	14.12	0.00	1.00x	0.520x	0.2292	0.1192x	3.24	0.00	0.00
14	0.00	22.06	10.59	0.00	1.00x	0.520x	0.2046	0.1064x	2.17	0.00	0.00
15	0.00	14.71	7.06	0.00	1.00x	0.520x	0.1827	0.0950x	1.29	0.00	0.00
16	0.00	7.35	3.53	0.00	1.00x	0.520x	0.1631	0.0848x	0.58	0.00	0.00
17	0.00	0.00	0.00	0.00	1.00x	0.520x	0.1456	0.0757x	0.00	0.00	0.00
18	0.00	0.00	0.00	0.00	1.00x	0.520x	0.1300	0.0676x	0.00	0.00	0.00
19	0.00	0.00	0.00	0.00	1.00x	0.520x	0.1161	0.0604x	0.00	0.00	0.00
20	0.00	0.00	0.00	0.00	1.00x	0.520x	0.1037	0.0539x	0.00	0.00	0.00
	(1,000.00)	1,000.00	480.00	200.00				3.6093x	265.48	212.29	(1,061.44)

* After-tax income is before depreciation allowance and investment tax credit.

Source: DRI.

years of income are appropriately reduced, i.e., 0.56x in Year 1 (0.56 is the 50% operating factor in Year 1 divided by the 90% factor for a normal year) and 0.83x in Year 2. Column [7] shows the residual income to the company after income tax is paid on the income in Column [6].

The 12% discount factors in Column [8] are used to generate the present values in Columns [9], [10], [11] and [12]. After summing the columns of present values of after-tax income, depreciation allowance, investment tax credit, and capital expenditure, an equation is constructed to determine the gross income, x, which must be generated by the $1,000 of invested capital to achieve a 12% DCF ROR; thus:

$$3.6093x = 1{,}061.44 - 265.48 - 212.29$$

$$[9] = [12] - [10] - [11]$$

therefore: $$x = \frac{583.67}{3.6093} = 161.71$$

(x represents the gross income in a full production year that is necessary to provide the specified DCF ROR, 12%, on $1,000 of fixed capital.)

hence: $$RF = \frac{161.71}{1{,}000} = 16.17\%$$

6.4.3 Cost Levelizing Calculations

While most direct operating costs vary in proportion to plant output, the operating costs for solid waste management do not. For example, the cost of the spring collection system starts in Year 0 and finishes in Year 14. To spread these costs in a pattern consistent with production, these operating costs are transformed into an annual figure which can then be applied to each barrel of shale oil produced. This is done by calculating a "levelized cost" for a normal year's production. This technique is also used to spread the extra start-up cost and severance tax credit uniformly over shale oil production.

A "levelizing factor" is used to make this transformation. The following equation shows how a levelizing factor is used to arrive at a levelized cost (i.e., a stream of payments having the same profile as production), given the present value of a nonuniform stream of payments:

$$\text{Levelized Cost} = \frac{\Sigma(\text{Present Values of a Cost Stream})}{\text{Levelizing Factor}}$$

By dividing the levelized cost by a normal year's output, a cost per unit of production is derived.

The equation for calculating the levelizing factor (LF) is:

$$LF = PVFA_{(r,N)} - \sum_{n=1}^{S} (PVF_{(r,n)} \times [1-L_n])$$

where:

LF = Levelizing factor

$PVFA_{(r,N)}$ = Present value factor of a uniform series of payments for N years

$PVF_{(r,n)}$ = Present value factor of a single payment in year n

r = Discount Rate = DCF ROR

N = Number of production years

S = Number of years in the start-up period

n = Any specific year in the start-up period

L_n = The proportion of normal output during any given start-up year; the series of L_n values constitutes the "start-up profile"

The second term on the right-hand side of the above equation is an adjustment to the uniform series represented by the first term. The complement of the L_n figure (i.e., that portion of each start-up year which is less than full production) is discounted, summed, and then subtracted from the uniform series. Since the start-up years have high present values, the effect of subtracting this term has a substantial impact on the levelizing factor. Because the levelizing factor is the denominator in the equation which determines the levelized cost (and, hence, the unit cost), this adjustment term raises the per-barrel cost.

<u>Cost Levelizing Example</u>--

To illustrate the concept of cost levelization, a calculation of the 12% DCF ROR levelizing factor used for this manual is presented below:

Year	% of Maximum Output (L_n)	PVF @ 12%	$(1-L_n) \times PVF$
1	56	0.8929	0.3929
2	83	0.7972	0.1355
3	100		0.0000
.	.		.
.	.	5.7793	.
.	.		.
20	100		0.0000
		7.4694	0.5284

Hence: $LF_{(r=12\%,\ N=20\ yrs)} = 7.4694 - 0.5284 = 6.9410$

(Note that all present values are expressed with respect to Year 0.)

This factor is the same as the denominator in the levelizing expressions LFAC1 and LFAC2.

As an illustration of a levelizing calculation, consider the groundwater collection costs.* These costs are incurred as follows:

Year 0: $6,270

Years 1 to 14: $12,375/yr

The present value of these costs, expressed with respect to Year 0, is calculated as follows:

Year	Expenditure	PVF @ 12%	Present Values
0	6,270	1.0000	$ 6,270
1	12,375	0.8929	11,050
2	12,375	0.7972	9,865
3	12,375	0.7118	8,809
4	12,375	0.6355	7,864
5	12,375	0.5674	7,022
6	12,375	0.5066	6,269
7	12,375	0.4523	5,597
8	12,375	0.4039	4,998
9	12,375	0.3606	4,462
10	12,375	0.3220	3,985
11	12,375	0.2875	3,558
12	12,375	0.2567	3,177
13	12,375	0.2292	2,836
14	12,375	0.2046	2,532
			$88,294

Thus, $88,294 is the present value of all the groundwater collection costs. To turn this into a cost that is distributed uniformly with respect to output, it must be divided by $LF_{(r = 12\%,\ N = 20 \text{ years})}$.

$$\text{Therefore, Levelized Cost} = \frac{88,294}{6.941} = \$12,721$$

* These costs are specified here with greater precision than is shown in Table 6.1-5.

Thus, $12,721 (rounded to $13,000 in Table 6.2-3) is the annual cost in a normal production year that is equivalent to the irregular cost profile given above. This direct annual operating cost can be used in conjunction with the algorithms given in Section 6.4.1 for calculation of total annual control cost and per-barrel control cost, whereas the irregular stream of expenditures from which it was derived could not be used with the standard methodology.

In summary, cost levelization redistributes a cost series that is not proportional to production in such a way as to yield an equivalent series that is proportional to production and has the same economic value.

SECTION 7

DATA LIMITATIONS AND RESEARCH NEEDS

A number of limitations associated with stream characterization and pollution control technology performance were identified in the data base during the preparation of the Pollution Control Technical Manual for the TOSCO II oil shale retorting process combined with underground mining. It is important that users of this manual be aware of these limitations. It is also important that these limitations be addressed prior to development of an oil shale facility of the magnitude analyzed in this manual and proposed by Colony Development Operation (e.g., 66,000 TPSD oil shale mined and 47,000 BPSD upgraded shale oil produced).

7.1 DATA LIMITATIONS

The description of the TOSCO II retorting process and information regarding applicable control technologies, performance, and costs used to prepare this manual were obtained from reports on the operation of experimental TOSCO II retorts, vendor descriptions, and engineering calculations used in conjunction with experience transferred from analogue industries such as the petroleum, utility, and mineral mining industries which utilize similar control technologies. Until "hands on" experience is obtained from commercial-scale oil shale operations, these sources constitute the best available data base. However, the limitations of this data base should be clearly understood. Experimental retorts were built and operated primarily to improve process design and not for demonstrating operation of a commercial-sized retort with attendant pollution control systems. Many pollution control systems have never been pilot tested with an oil shale retort. Even for those control systems that were pilot tested, often the data collected have been very limited.

The primary experience with TOSCO II retorting involves a pilot plant (24 tons/day) and a semi-works plant (1,000 tons/day) operated in Colorado over the past several years, and the available data from these tests have been used in this manual. A full-sized TOSCO II retort is expected to process 11,000 TPSD of raw shale, and six of these retorts will be needed to produce 47,000 BPSD of upgraded shale oil. This represents an enormous scale-up of the pilot and semi-works retorts; therefore, improvements in the retort design and operating parameters may be inevitable, resulting in some uncertainty about the stream compositions and performance of control technologies.

Variations in the grade of the shale also introduce modifications to the operating parameters and, hence, the data. The TOSCO II experimental retorts

have been operated on a site-specific basis, i.e., primarily with shale mined from the site of the prospective development (the Colony property near Parachute, Colorado). A linear extrapolation of the data from these operations may not be entirely applicable to the processing of shales from other locations (e.g., Tosco Corporation's Sand Wash project in Utah), and a direct transfer of the information to other development sites must be made with caution.

It should also be noted that, to date, the TOSCO II plants have primarily consisted of the pyrolysis system; that is, only the preheat system, retort, and overhead fractionater have been included. Other unit processes (e.g., oil and gas recovery, hydrogen unit, hydrotreaters, delayed coker) and control technologies (e.g., sulfur recovery, tail gas treatment, ammonia recovery) that form the basis for the complete plant analyzed in this manual have not yet been tested with the TOSCO II process (with the exception of the diethanolamine acid gas removal process which was tested in conjunction with the pilot plant, but performance data from the test are not available). Therefore, actual control technology performance and compatibility with the TOSCO II retorting process have not been demonstrated.

The fact that the processing streams have been measured in terms of major constituents only is an additional limitation. Information on minor constituents, which may be of concern from an operational as well as an environmental viewpoint, is not well documented. Examples of such constituents include regulated and nonregulated pollutants (e.g., trace elements, specific organics, inorganics), all of which can have an impact upon the choice and operation of downstream control.

Assessing the limitations of existing data sources was an important by-product resulting from the preparation of this manual. Since the best available information on each subject was selected, this manual represents the best currently available data base on the TOSCO II retorting process; also, within the limitations of available data, it accurately estimates the control efficiencies achievable.

7.2 RESEARCH NEEDS

The limited potential for the transfer of control technology from pilot and semi-works retorting tests and from analogue industries to commercial oil shale operations emphasizes a genuine need for research in certain areas of oil shale processing and pollution control. This need is strengthened by the fact that, even with several years of experience, the oil shale industry is still in an early state of development.

While it is recognized that further research will be essential in all phases of oil shale commercialization, the major areas of data uncertainty regarding characterization of streams and control technology performance, as revealed during preparation of the TOSCO II PCTM, are identified in Table 7.1-1. The status of the information is presented according to the development stage of the source and technology. The specific information sources are also identified. A reliability or confidence ranking is assigned to the data for each stream and technology based on a subjective evaluation

of the direct applicability of the data to a commercial-scale TOSCO II facility. Some salient features and caveats in the information base are noted, and specific research needs are identified to overcome some of the data limitations.

TABLE 7.1-1. DATA LIMITATIONS AND RESEARCH NEEDS

Streams and Control Technologies (Figure No.)	Pollutant Controlled	Information Status[a]	Information Sources[b]	Reliability[c]	Remarks	Research Needs
Particulate Emissions (3.3-2, 3.3-14)	--	D	3	2	The particulate emission estimates have been obtained from the 1,000 TPSD TOSCO II semi-works plant.	
					Only the bulk particulates are reported. Trace elements and other criteria pollutants are not reported.	Data on trace elements and other criteria pollutants need to be obtained from actual source testing.
Baghouses (3.3-2)	Particulates (point source)	D	3,4	1	The technology has been tested with the TOSCO II semi-works operation. A 99.7% particulate removal efficiency for the baghouses was claimed in the Colony PSD permit application. A permit was issued.	
		G,H,I	24	1	The technology is widely used in other industries. The claimed particulate removal efficiency appears to be reasonable based on the information from sources 3, 4 and 24.	
Water and Foam Sprays (3.3-2, 3.3-14)	Particulates (fugitive)	D	3,4	1	Control efficiencies of 85% for the foam and 50% for the water sprays were claimed in the PSD application. A permit was issued.	
		G,H,I	24	1	The technologies are widely used in other industries. Engineering calculations indicate that the claimed particulate control efficiencies are achievable.	
Retort Gas (3.3-3, 3.3-4)	--	D	1,7	2	The gas composition was obtained from the retorting of the Colony property oil shale which averages 35 gpt.	Retorting data on various grades of shales from different locations need to be obtained to verify the transferability of the data to other sites.
					Sulfur species, other than H_2S, are not reported.	The presence or absence of COS, CS_2, mercaptans, etc., needs to be verified.
					Nitrogen compounds, including NH_3, are not reported.	The presence or absence of NH_3, cyanides, amines, etc., needs to be verified.

(Continued)

TABLE 7.1-1 (cont.)

Streams and Control Technologies (Figure No.)	Pollutant Controlled	Information Status[a]	Information Sources[b]	Reliability[c]	Remarks	Research Needs
DEA (3.3-5)	H_2S	C	3,4	3	The technology has been tested with the 24 TPSD TOSCO II pilot operations. An H_2S removal efficiency of 135 ppmv in the treated gas was claimed in the PSD application. A permit was issued.	Scale-up data need to be obtained.
					The H_2S, COS, CS_2, and mercaptans content in the DEA-treated gas are reported, but the original feed concentrations are not known; therefore, the control efficiency cannot be determined.	Control efficiencies for H_2S, COS, CS_2, mercaptans, etc., need to be determined.
		G,H,I	24	2	The technology is used commercially in other industries. An engineering analysis of the published and vendor information indicates that the claimed H_2S removal efficiency is achievable.	The technology transferability needs to be verified.
Claus (3.3-5)	H_2S, SO_2	I	2,3,4	3	A three-stage Claus unit at 95% SO_2 conversion efficiency was included in the PSD application. A permit was issued.	
					In source 2, the ammonia in the feed gas is claimed to be converted to N_2 rather than NOx.	The ammonia feed concentration and its conversion to NOx need to be determined.
					Excessive amounts of organic compounds are detrimental to the process due to excessive heat generation and organic sulfur compound formation.	The amounts of organic compounds in the DEA acid gases and organic sulfur compounds in the Claus tail gas need to be determined.
		G,H	24,25	2	The operating experience with the retort gases is not documented, but the technology is used commercially in various gas purification applications. The claimed SO_2 conversion efficiency of 95% is achievable, as indicated from the published and vendor information.	The technology transferability needs to be verified.
Wellman-Lord (3.3-7)	H_2S, SO_2	I	3,4	3	A Wellman-Lord tail gas unit operating at 92% SO_2 removal efficiency was included in the PSD application. A permit was issued.	

(Continued)

TABLE 7.1-1 (cont.)

Streams and Control Technologies (Figure No.)	Pollutant Controlled	Information Status[a]	Information Sources[b]	Reliability[c]	Remarks	Research Needs
		G,H	24,25	2	The operating experience with the retort gases is not documented, but the technology is used commercially in tail gas desulfurization applications in other industries. The claimed recovery of SO_2 is 92 percent.	The technology transferability needs to be verified.
					Excessive amounts of CO_2 and other diluents in the feed gas increase the fuel requirements for the feed gas incineration. The potential for the formation of stable organic sulfur compounds is also increased.	The efficiency of recovering total reduced sulfur compounds needs to be determined.
SCOT (5.1-10)	H_2S, SO_2	I	21	1	Communication with Tosco personnel has indicated that a SCOT tail gas process may be considered as a replacement for the Wellman-Lord process. A modification to the PSD application has not been filed.	
		G,H	24,25	2	The operating experience with the retort gases is not documented, but the technology is used commercially for Claus tail gas cleanup. The technology is specifically designed for the Claus tail gas application. An SO_2 removal efficiency of 300 ppmv in the flue gas is claimed to be achievable. This is comparable to the efficiency obtainable with the Wellman-Lord process.	The technology transferability needs to be verified.
					Stable organic sulfur compounds may form during the feed gas incineration.	The catalytic conversion efficiency for the total reduced sulfur compounds and subsequent removal and recovery in the amine absorption section needs to be verified.
					Although the amine (DIPA) employed in the H_2S removal section is somewhat selective in absorbing H_2S in the presence of CO_2, significant amounts of CO_2 are also absorbed and recycled back to the Claus, thus diluting the feed.	The utility of more than one amine absorber-regenerator system in series needs to be determined in order to obtain ever higher selectivity in absorbing H_2S.

(Continued)

TABLE 7.1-1 (cont.)

Streams and Control Technologies (Figure No.)	Pollutant Controlled	Information Status[a]	Information Sources[b]	Reliability[c]	Remarks	Research Needs
Stretford (3.3-6)	H_2S	G,H,I	24,25	3	The operating experience with the retort gases is not documented, but the technology is used commercially in other industries.	The technology transferability needs to be verified.
					Non-H_2S sulfur compounds may not be recovered efficiently with this technology.	The control efficiencies for COS, CS_2, mercaptans, etc., need to be determined.
					Excessive amounts of heavy organics tend to deteriorate the reagents and the quality of the sulfur product.	The impact on the efficiency of H_2S removal due to heavy organics in the feed needs to be quantified.
					Non-NH_3 nitrogen compounds may also degrade the reagents.	The impact of organic amines, HCN, etc., on the Stretford chemicals needs to be quantified.
					According to the vendor information, an H_2S removal efficiency of 30 ppmv in the treated gas is achievable with a single absorber.	
MDEA (5.1-12)	H_2S	G,H,I	21,24,25	3	The operating experience with the retort gases is not documented, but the technology is used commercially in other industries.	The technology transferability needs to be verified.
					According to the vendor information, the technology is capable of reducing the H_2S in the gas to 30 ppmv.	The potential of obtaining higher selectivity in H_2S absorption, with more than one absorber-regenerator in series, needs to be investigated.
					The technology may not achieve a high removal efficiency for other sulfur compounds.	The removal efficiencies for the non-H_2S sulfur compounds need to be determined.
					The technology is selective for H_2S absorption, but approximately 30% of the CO_2 still may get absorbed in the amine.	
					Non-NH_3 nitrogen compounds may be detrimental to the process.	The impact of non-NH_3 nitrogen compounds, especially HCN, on the MDEA solution needs to be quantified.

(Continued)

TABLE 7.1-1 (cont.)

Streams and Control Technologies (Figure No.)	Pollutant Controlled	Information Status[a]	Information Sources[b]	Reliability[c]	Remarks	Research Needs
					The technology may be used as a tail gas cleanup process, in the same manner as the SCOT technology.	The feasibility of the technology as a Claus tail gas treatment process needs to be determined.
Preheat System Flue Gas (3.3-3)	--	D,I	1,2,3,4	2	The information on the flue gas composition has been obtained from the Colony EIA and EIS. It is based on the quantities of the fuels used in the ball heater and thermal oxidizer, which in turn were determined from the semi-works retort operation. The emission estimates for the particulates, SO_2, NOx, CO, and hydrocarbons have been obtained from the Colony PSD application.	
					The information has been generated for the 35 gpt oil shale. The shale preheating and retorting requirements may be significantly different for other oil shales.	The impact of shale grade variations on the ball recycle rate, shale preheating requirements, and the flue gas composition needs to be obtained.
					Data on trace elements and several criteria pollutants are not documented.	Information on other criteria pollutants needs to be obtained.
					The information on NOx emissions indicates that thermal fixation of the atmospheric nitrogen does not occur to any significant extent.	The origin of the NOx (fuel-based or thermal fixation) needs to be verified.
					Approximately 95% of the SO_2 generated from the combustion of various fuels in the preheat system is claimed to be adsorbed on the raw shale. The calcination of the raw shale at 500-550°F preheat temperature would be low; therefore, the SO_2 adsorption would also be low.	The efficiency of SO_2 pick-up on the raw shale needs to be verified.
Thermal Oxidizer (3.3-3)	Hydrocarbons	D	8	2	The operating experience has been obtained from the semi-works retort operation, using the Colony property oil shale averaging 35 gpt.	Scale-up data need to be obtained. Also, the amount of retorting that can occur during preheating and the efficiency of the thermal oxidizer need to be obtained for different shales.

(Continued)

TABLE 7.1-1 (cont.)

Streams and Control Technologies (Figure No.)	Pollutant Controlled	Information Status[a]	Information Sources[b]	Reliability[c]	Remarks	Research Needs
					Only the hydrocarbons generated in the first preheat stage are incinerated; those generated in the final two preheat stages are emitted to the atmosphere. Approximately 50% of the hydrocarbons are condensable and, therefore, are considered as particulates and not as hydrocarbons. The flue gas temperature can have an impact on the amounts of noncondensable hydrocarbons and particulates.	The total and condensable hydrocarbons and total and solid particulates need to be estimated as a function of the stack gas temperature.
		D	3,4	2	An incineration efficiency of 99% for the thermal oxidizer has been claimed in the Colony PSD application. A permit was issued. Overall hydrocarbon efficiency is 85%, or 92 ppmv by weight, in the flue gas.	
		G,H,I	24	2	The technology is used commercially in other industries. Engineeering calculations indicate that the claimed efficiency is achievable.	The technology transferability needs to be verified.
High Energy Venturi Wet Scrubber (3.3-3)	Particulates	D	3,4	2	The operating experience has been obtained from the semi-works operation.	Scale-up data need to be obtained.
					The claimed SO_2 removal efficiency of the preheat system may be due partially to the wet scrubbing of the flue gas.	Dissolution of the SO_2 in the scrubber water and the chemical fixation of the SO_2 in the raw shale sludge need to be determined.
					A particulate removal efficiency of 99.8% was claimed in the Colony PSD application. A permit was issued.	
		G,H,I	24,25	2	The technology is used commercially in other industries. Engineering calculations indicate that, at the prescribed ΔP of 40 inches of water, the claimed efficiency is achievable. The particulate loading to the scrubber, however, depends on the efficiency of the cyclones before it;	The impact of particle size on the efficiency of the wet scrubber needs to be quantified.

(Continued)

TABLE 7.1-1 (cont.)

Streams and Control Technologies (Figure No.)	Pollutant Controlled	Information Status[a]	Information Sources[b]	Reliability[c]	Remarks	Research Needs
					therefore, the quantity of particulate emissions may vary with changes in the loading and efficiency of the cyclones.	
Steam Superheater Flue Gas (3.3-3)	--	D,I	1,2,3,4	2	The information on the flue gas composition is based on the amount of fuel oil specified for the steam superheater in the Colony EIA and EIS. The fuel need has been obtained from the operation of the semi-works retort.	Scale-up data need to be obtained.
					The particulate, SO_2, NOx, CO, and hydrocarbon emissions were obtained from the PSD application.	Information on other criteria pollutants needs to be obtained.
					The flue gas is used for dedusting the processed shale fines from the balls. Since there may be a fair amount of calcination of the processed shale, some SO_2 should be adsorbed; however, none is reported to be adsorbed.	Adsorption of the flue gas SO_2 on the processed shale needs to be determined.
Venturi Wet Scrubber (3.3-3)	Particulates	D	3,4	2	The operating experience has been obtained from the semi-works retort.	Scale-up data need to be obtained.
					Some SO_2 may dissolve in the water or may get fixed on the processed shale sludge, but this is not reported.	The wet scrubbing of the SO_2 and its fixation on the processed shale sludge needs to be determined.
					A particulate removal efficiency of 99.8% was claimed in the PSD application. A permit was issued.	
		G,H,I	24,25	2	The technology is used commercially in other industries. The claimed efficiency in controlling the particles appears to be achievable; however, the particulate emissions may vary in quantity depending upon the amount of fines carried over from the processed shale-ball separator (the trommel in the accumulator vessel) to the scrubber.	The technology transferability needs to be verified.

(Continued)

TABLE 7.1-1 (cont.)

Streams and Control Technologies (Figure No.)	Pollutant Controlled	Information Status[a]	Information Sources[b]	Reliability[c]	Remarks	Research Needs
Venturi Emission--Processed Shale Moisturizer (3.3-3)	--	D	3,4	2	The information has been obtained from the Colony PSD application which is based on the semi-works retorting experience.	Scale-up data need to be obtained.
					Only the particulates are reported for the flue gas. Other criteria pollutants are not reported.	Information on other criteria pollutants needs to be obtained.
					There is a potential for the release of volatile compounds from the hot processed shale and due to the possibility of a coke-steam reaction.	The potential of a coke-steam reaction causing the release of volatiles needs to be quantified.
Venturi Wet Scrubber (3.3-3)	Particulates	D	3,4	3	The operating experience has been obtained from the semi-works retort.	Scale-up data need to be obtained.
					A particulate removal efficiency of 98.4% at 20-inch ΔP was claimed in the PSD application; however, it was not approved in the permit. A control efficiency of 99.0% at a greater than 20-inch ΔP was required. A modification to the PSD application to correct the control deficiency has not been filed.	The pressure drop necessary to obtain the required efficiency of 99.0% needs to be determined.
		G,H,I	24,25	2	The technology is used commercially in other industries. The required efficiency of 99.0% is judged to be achievable at less than 40-inch pressure drop.	The technology transferability needs to be verified.
Fugitive Hydrocarbons	--	I	1,2,7	2	The fugitive hydrocarbons are estimated from the properties of the oil products.	
Floating Roof Tanks	Hydrocarbons	I	3,4	2	The double-sealed, floating roof storage tanks for volatile product storage have been specified in the PSD application.	
		G,H	24,25	1	The floating roof storage tanks are used commercially for oil storage.	

(Continued)

TABLE 7.1-1 (cont.)

Streams and Control Technologies (Figure No.)	Pollutant Controlled	Information Status[a]	Information Sources[b]	Reliability[c]	Remarks	Research Needs
Maintenance	Hydrocarbons	G,H	24,25	1	Routine maintenance of valves, pumps, etc., is a commonly used operational practice to control the hydrocarbon leakage.	
Catalytic Converters	Hydrocarbons, CO	G,H	24,25	1	All diesel-powered machinery is equipped with catalytic converters to control hydrocarbon and CO emissions. The catalytic converters are a commonly used technology.	
Foul Water (3.3-4, 3.3-9)	--	C	9,10	3	The information on the foul water composition has been obtained from the TOSCO II pilot plant studies.	Scale-up data need to be obtained.
					Composition information on the additional foul water obtained upon the compression of the retort gas is not documented (the TOSCO II pilot or semi-works plants did not include an oil and gas recovery section).	The composition of the retort gas compression condensate needs to be determined.
					The composition of the foul water from the delayed coker is not documented (a delayed coking unit was not incorporated in the TOSCO II pilot or semi-works plants).	The composition of coker wash water needs to be determined.
		I	1,2	3	The foul water quantity was estimated from the amounts of moisture in the shale and the steam added to the retort, both of which can change with variations in the feed.	The impact of variations in the shale grade and of moisture content on the quality and quantity of the foul water need to be quantified.
Oil/Water Separator (3.3-4)	Oils and Greases	G,H,I	24,25	2	An API oil/water separator is used to remove oils and greases from the foul water. The technology is a commonly used practice in other industries. It is not known whether an oil/water separator was employed in conjunction with the TOSCO II pilot or semi-works operations.	The technology transferability needs to be verified.

(Continued)

TABLE 7.1-1 (cont.)

Streams and Control Technologies (Figure No.)	Pollutant Controlled	Information Status[a]	Information Sources[b]	Reliability[c]	Remarks	Research Needs
					Oil emulsions may not be controlled by the separator. Addition of chemicals or heating the water may be necessary to break the emulsion.	The oil emulsion problem with the oil shale retort waters or gas condensates needs to be determined.
					The oil/water separator is also used to treat the service area runoff.	
Steam Stripper (3.3-4)	Volatile Gases (organics, H_2S, NH_3)	B	9	3	Bench-scale stripping of the volatiles in the foul water from the pilot plant has been attempted. The volatiles were actually evaporated by boiling the water, resulting in an eventual concentration of the water. The amount of volatiles stripped in this manner is likely to be higher than what can be obtained in a continuous, constant volume stripping operation.	Scale-up data need to be obtained. Also, the efficiency of removing the volatiles in the water by steam stripping on a continuous basis needs to be evaluated.
					Excessive amounts of dissolved organics may cause foaming in the stripper.	The potential of foaming due to the oil emulsions needs to be quantified.
		G,H,I	24	2	Steam stripping is a commonly used technique for controlling the dissolved volatile components in wastewaters. The steam stripper in this manual is designed with a partial reflux to make the plant less water-consumptive. The stripping efficiency in this case is lower than that obtained in laboratory tests.	The technology transferability needs to be verified.
Biological Oxidation (3.3-13)	Dissolved Organics	B	11,12,13	4	Some laboratory studies on biological oxidation of oil shale process waters are reported. The operating experience with the TOSCO II foul water is not documented.	Scale-up data need to be obtained.
					Oil shale wastewaters generally contain biorefractory material; therefore, complete biodegradation of the organics may not be possible.	The feasibility and efficiency of biological degradation of oil shale wastewaters needs to be determined.

(Continued)

TABLE 7.1-1 (cont.)

Streams and Control Technologies (Figure No.)	Pollutant Controlled	Information Status[a]	Information Sources[b]	Reliability[c]	Remarks	Research Needs
		G,I	24,25	3	The technology is commonly used in municipal wastewater treatment. An activated air sludge system was used in this manual because it is faster and less susceptible to toxicity problems.	The technology transferability needs to be verified.
Reverse Osmosis (RO) (5.2-15)	Dissolved Organics (and inorganics)	B	14	4	Some laboratory studies on RO treatment of in situ retort waters have been carried out successfully.	Scale-up data need to be obtained. Also, the feasibility and efficiency of RO treatment for the TOSCO II foul water need to be determined.
		G,H,I	24,25	3	The technology is used commercially in other applications. In this manual, the technology is applied to the stripped foul water to reduce the dissolved organics concentration. Approximately 95% of the organic matter is estimated to be removable.	The technology transferability needs to be verified.
Vapor Compression Evaporation (VCE) (5.2-17)	Dissolved Organics (and inorganics)	G,H,I	15	4	The technology has proven to be effective on oil shale wastewaters at a bench-scale level.	Scale-up data need to be obtained. Also, the feasibility and efficiency of VCE treatment for the TOSCO II foul water need to be evaluated.
		I	16,17	3	The technology is used commercially in other wastewater applications. In this manual, the technology is used for treating the stripped foul water. Approximately 85% of the organics and 100% of the inorganics appear to be removable given that volatile components from the feed have been previously removed.	The technology transferability needs to be verified.
Carbon Adsorption (CA) (5.2-19)	Dissolved Organics	G,H,I	16,24,25	3	The technology is used commercially in the treatment of industrial and municipal wastewaters. The operating experience with oil shale wastewaters is not documented. In this manual, the technology is used for cleaning the TOSCO II foul water that already has been treated by the RO or VCE technologies. Approximately 80% of the organics appear to be removable with this technology.	The technology transferability needs to be verified. Also, the feasibility and efficiency of CA treatment for the TOSCO II foul water needs to be evaluated.

(Continued)

TABLE 7.1-1 (cont.)

Streams and Control Technologies (Figure No.)	Pollutant Controlled	Information Status[a]	Information Sources[b]	Reliability[c]	Remarks	Research Needs
Wet Air Oxidation (WAO) (5.2-21)	Organics	G,H,I	17,18,24,25	3	The technology is used commercially in other industries. The operating experience with oil shale wastewaters is not documented. In this manual, the technology is used for the destruction of organics in the RO or VCE concentrates. Approximately 90% of the organics appear to be destructable by this technology.	The technology transferability needs to be verified. Also, the feasibility and efficiency of WAO treatment for the TOSCO II foul water need to be evaluated.
Solar Evaporation Pond (5.2-11)	Dissolved Inorganics	G,H,I	24	2	The technology is commonly used for concentrating the wastewaters. Solar energy incident on an open evaporation pond is used to evaporate the wastewater. The precipitated salts may be removed periodically. In this manual, the technology is used to concentrate the process wastewaters. Specifically, the oxidized sludge from the WAO technology and the blowdown from the cooling tower (when the process water is used in the cooling tower) are placed in the solar pond. Sufficient storage capacity and surface area are provided to hold the wastewaters without overflowing during the low-evaporation, high precipitation periods.	Characterization and disposal approaches for the residuals need to be determined.
Sour Water (3.3-10, 3.3-11)		I	1,2,7	3	The sour water composition was calculated from the materials balance, composition of the crude and upgraded oils, and amount of NH_3 recovered as a by-product. Actual hydrotreatment of the shale oil has not been documented.	The composition of the sour water needs to be determined experimentally by hydrotreating the crude shale oil.
					The calculated sour water composition is for the combined sour waters from the naphtha hydrotreater and the gas oil hydrotreater.	The composition of the sour water from both hydrotreaters needs to be determined individually.
					Dissolved organics in the sour water may have a detrimental impact on the efficiency of the ammonia recovery system and the quality of the product.	Dissolved organics in the sour water need to be estimated.

(Continued)

TABLE 7.1-1 (cont.)

Streams and Control Technologies (Figure No.)	Pollutant Controlled	Information Status[a]	Information Sources[b]	Reliability[c]	Remarks	Research Needs
Ammonia Recovery System (3.3-12)	NH_3	G,H,I	19,24,25	2	The operating experience with oil shale process waters is not documented. The technology is used commercially in other industries. The Phosam-W process was examined in this manual as an example of an ammonia recovery process. Over 99% of the ammonia in the sour water can be recovered by this technology.	The technology transferability needs to be verified. Also, the feasibility and efficiency of the ammonia recovery process for the TOSCO II sour water need to be evaluated.
Solid Wastes (3.3-14)	--	D	1,24	3	The TOSCO II processed shale composition has been derived from the semi-works plant information and the material and elemental balances.	Scale-up data need to be obtained.
		B	20,21,22	3	Some physical properties of the processed shale have been measured in laboratory testing.	Scale-up data need to be obtained.
		B,C	9	3	The quality of leachate from the processed shale has been determined in laboratory and field testing experiments.	Scale-up data need to be obtained.
		I	24	4	The quality of coke has been determined from the material and elemental balances.	The physical and chemical characteristics of coke need to be determined.
		I	24	4	Various nonhazardous wastes (e.g., cooling tower blowdown, boiler blowdown, river water clarifier sludge, storm runoff, service and fire water) are combined to form the processed shale moisturizing water.	The extent to which the process wastewaters need to be treated before mixing them with the processed shale needs to be determined.
		I	24	4	Various solid wastes (e.g., raw and processed shale sludges, treatment sludges, coke, debris, trash) are combined with the processed shale for disposal.	Changes in the physical and chemical properties of the processed shale due to the mixing of solid wastes and wastewaters need to be determined.
		A	24	4	Hazardous wastes, such as spent catalysts, are segregated from the nonhazardous wastes and disposed of separately.	Characterization and disposal approaches for hazardous wastes need to be determined.

(Continued)

TABLE 7.1-1 (cont.)

Streams and Control Technologies (Figure No.)	Pollutant Controlled	Information Status[a]	Information Sources[b]	Reliability[c]	Remarks	Research Needs
		B	23	4	There is a potential for gaseous emissions and auto-oxidation due to the carbonaceous nature of the processed shale.	The auto-oxidation potential of the processed shale needs to be evaluated.
Surface Landfill (3.3-14)	Solid Wastes	I	5,6,24	2	A surface landfill was described in Colony's application for a disposal permit from the Colorado Mined Land Reclamation Board (CMLRB). A conditional permit has been issued.	
					The operating experience with the processed shale landfill stability is not documented.	The landfill stability needs to be evaluated from controlled, large-scale landfills.
Runon Diversion System	Leachable Compounds	I	5,6,24	2	Unlined ditches above the landfill and lined ditches around the landfill were mentioned in the CMLRB application. The runon, runoff, and leachate are collected together in a catchment pond downstream of the landfill.	The feasibility of unlined ditches for runon diversion needs to be verified. The impact of keeping the runon separate from the contaminated waters needs to be evaluated. Alternate systems for controlling the runon, such as runon retention with and without controlled release, need to be evaluated.
					The operating experience with the processed shale landfills is not documented, but the technology is used in other industries.	The technology transferability needs to be verified.
Runoff Collection System (5.3-3, 5.3-4)	Leachable Compounds	I	5,6,24	2	Half-round pipes on the landfill benches for the lateral conveyance of the runoff and lined ditches around the landfill for vertical conveyance were mentioned in the CMLRB application. An earth dam is also provided downstream of the landfill to collect the runoff and other waters. The resulting catchment pond is not lined.	Alternate systems for runoff collection and its lateral conveyance, such as a paved invert section and lined ditch, need to be evaluated. Temporary impoundment of the runoff on the landfill surface needs to be studied. Alternate systems for vertical conveyance, such as gravel-filled ditches and pipes with energy dissipators, need to be evaluated. Merits of lining the catchment pond need to be determined.
					The operating experience with the processed shale landfills is not documented, but the technology is used in other industries.	The technology transferability needs to be verified.

(Continued)

TABLE 7.1-1 (cont.)

Streams and Control Technologies (Figure No.)	Pollutant Controlled	Information Status[a]	Information Sources[b]	Reliability[c]	Remarks	Research Needs
Groundwater Collection System	Leachable Compounds	I	5,6,24	2	Gravel blankets above the groundwater and spring seepage were mentioned in the CMLRB application. The system drains into the common catchment pond.	Alternate systems using ditches, pipes, temporary impoundment, etc., need to be evaluated.
					The operating experience with the processed shale landfills is not documented, but the technology is used in other industries.	The technology transferability needs to be verified.
Bottom Liner	Leached Compounds	I	5,6,24	2	A 2-foot layer of compacted processed shale at the bottom of the landfill was mentioned in the CMLRB application. The permeability of the processed shale has been measured in laboratory testing.	The effectiveness of the processed shale liner to reduce the potential for groundwater contamination needs to be evaluated under field conditions.
Landfill Cover	Leachable Compounds	I	5,6,24	2	A 2-foot layer of compacted processed shale on the top of the landfill was mentioned in the CMLRB application.	The effectiveness of the processed shale cover in reducing surface water penetration into the landfill and erosion potential needs to be evaluated under field conditions.
Dust Control	Particulates	I	5,6,24	2	Water spraying during waste transport, deposition and compaction, and paving of the haul roads was mentioned in the CMLRB application.	Alternate systems for dust control, such as application of chemical binders and asphaltic emulsions, need to be evaluated.
Reclamation and Revegetation	Leachable Compounds, Particulates, etc.	I	5,6,24	2	An 18-inch layer of soil and soil enhancement materials on the top of the landfill was mentioned in the CMLRB application. The surface is to be revegetated with native and introduced species.	The effectiveness of the soil cover in reestablishing and sustaining the vegetation on a long-term basis needs to be evaluated.
					Processed shale vegetation studies have been made on small field plots.	Additional data on revegetation may need to be obtained from large-scale, processed shale landfills.

[a] Information Status:

A Conceptual analysis.
B Laboratory, bench-scale studies--oil shale or similar industry.
C Pilot plant studies--oil shale or similar industry.
D Semi-works studies--oil shale or similar industry.

(Continued)

TABLE 7.1-1 (cont.)

E Commercial-scale studies--oil shale or similar industry.
F Pilot-scale studies--related industries.
G Commercial-scale studies--related industries.
H Vendor provided information.
I Engineering calculations.

[b] Information Sources (detailed source information can be found in Section 8, References):

1 Colony Development Operation, 1974.
2 U.S. DOI, 1977.
3 Colony Development Operation, 1977.
4 U.S. EPA, July 11, 1979.
5 Colony Development Operation, March 1980.
6 Colorado Mined Land Reclamation Board, October 23, 1980.
7 Whitcombe and Vawter, March 1975.
8 Whitcombe, et al., December 9, 1975.
9 Metcalf & Eddy Engineers, October 1975.
10 Haas, June 1979.
11 Adams and Eckenfelder, 1974.
12 Hicks and Wei, December 1980.
13 Hicks, et al., June 1979.
14 Hicks and Liang, January 1981.
15 Resources Conservation Corp., September 1981.
16 Cheremisinoff and Ellerbusch, 1978.
17 Water Purification Associates, December 1975.
18 Wilhelmi and Knopp, August 1979.
19 U.S.S. Engineers and Consultants, Inc., April 1978.
20 Peterson, Townsend and Bloomfield, November 1978.
21 Communication with Tosco and Colony personnel.
22 Ward, Margheim and Löf, December 1971.
23 Schmidt-Collërus, et al., January 1974.
24 Engineering calculations (DRI, SWEC, WPA).
25 Vendor estimates.

[c] Reliability:

1 Information is judged to be applicable, no problems envisioned.
2 Information applicable, but some design or scale-up problems may be encountered.
3 Information applicable, but significant design or scale-up problems may be encountered.
4 Information may be applicable, but both design as well as scale-up problems may be encountered.
5 Information may not be applicable without major design and scale-up modifications.

Source: DRI based on the references listed in footnote b.

SECTION 8

REFERENCES

Adams, C.E. and W.W. Eckenfelder, eds. 1974. Process Design Techniques for Industrial Waste Treatment. Associated Water and Air Resources Engineers, Environmental Press, Nashville, Tennessee.

American Petroleum Institute. 1969. Manual on Disposal of Refinery Wastes, Volume on Liquid Wastes. API, New York.

American Petroleum Institute. March 1978. A New Correlation of NH_3, CO_2 and H_2S Volatility Data From Aqueous Sour Water Systems. Publication No. 955. API, New York.

Barduhn, A.J. September 1967. The Freezing Processes for Desalting Saline Waters. Progress in Refrigeration Science and Technology, Proceedings of the International Congress of Refrigeration, 12th, Madrid. Vol. 1, 37-55.

Battelle, Columbus Laboratories. October 1978. Control of NOx Emission by Stack Gas Treatment. EPRI FP-925. Final report prepared for the Electric Power Research Institute, Palo Alto, California.

Beychok, M.R. 1967. Aqueous Wastes from Petroleum and Petrochemical Plants. John Wiley and Sons, Surrey, England.

Calmon, C. and H. Gold. 1979. Ion Exchange for Pollution Control. 2 vols. CRC Press, Boca Raton, Florida.

Cheremisinoff, P.N. and F. Ellerbusch. 1978. Carbon Adsorption Handbook. Ann Arbor Science, Ann Arbor, Michigan.

Coffin, D.L., et al. 1968. Geohydrologic Data from the Piceance Creek Basin Between the White and Colorado Rivers, Northwestern Colorado. U.S. Department of the Interior, Geological Survey and Colorado Water Conservation Board, Denver, Colorado.

Colony Development Operation. 1974. An Environmental Impact Analysis for a Shale Oil Complex at Parachute Creek, Colorado. 3 vols.

Colony Development Operation. 1977. Prevention of Significant Deterioration; Application to U.S. Environmental Protection Agency, Region VIII.

Colony Development Operation. January 26, 1979. Correspondence to U.S. Environmental Protection Agency, Region VIII, regarding updated information for PSD permit application, Addendum #10.

Colony Development Operation. March 1980. Application to Colorado Mined Land Reclamation Board for Solid Waste Disposal Permit.

Colorado Mined Land Reclamation Board. October 23, 1980. Solid Waste Disposal Permit granted to Colony Development Operation.

Denver Research Institute/Water Purification Associates/Stone and Webster Engineering Corporation. July 1979. Predicted Costs of Environmental Controls for a Commercial Oil Shale Industry. U.S. Department of Energy Report No. COO-5107-2.

Dravo Corporation. 1975. Materials Heading Techniques for Backfilling a Proposed Oil Shale Mine.

Dravo Corporation. February 1976. Handbook of Gasifiers and Gas Treatment Systems. FE-1772-11. Final Report, Task Assignment No. 4, Engineering Support Services. Submitted to the U.S. Energy Research and Development Administration.

Electric Power Research Institute. April 1980. Economic and Design Factors for Flue Gas Desulfurization Technology. EPRI CS-1428.

Fox, J.P., D.E. Jackson and R.H. Sakaji. 1980. Potential Uses of Spent Shale in the Treatment of Oil Shale Retort Waters. 13th Oil Shale Symposium Proceedings, Colorado School of Mines, Golden, Colorado.

Fox, J.P., K.K. Mason and J.J. Duvall. 1979. Partitioning of Major, Minor and Trace Elements During Simulated In Situ Oil Shale Retorting. 12th Oil Shale Symposium Proceedings, Colorado School of Mines, Golden, Colorado.

Girvin, D.C., T. Hadeishi and J.P. Fox. June 1980. Use of Zeeman Atomic Absorption Spectroscopy for the Measurement of Mercury in Oil Shale Gases. Oil Shale Symposium: Sampling, Analysis and Quality Assurance, March 26-28, 1979, Denver, Colorado. EPA-600/9-80-022. U.S. Environmental Protection Agency.

Haas, F.C. June 1979. Analysis of TOSCO II Oil Shale Retort Water. Presented at American Society for Testing and Materials Symposium D-19 on Analysis of Waters Associated with Alternative Fuel Production, Pittsburgh, Pennsylvania. ASTM STP 720.

Hart, J.A. June 11, 1973. Waste Water Recycled for Use in Refinery Cooling Towers. Oil and Gas Journal. 71(24):92-96.

Hicks, R.E., et al. June 1979. Wastewater Treatment in Coal Conversion. EPA-600/7-79-133. U.S. Environmental Protection Agency.

Hicks, R.E. and L. Liang. January 1981. A Study of Reverse Osmosis for Treating Oil Shale In Situ Wastewaters, Final Report. DOE/LC/10089-5. U.S. Department of Energy.

Hicks, R.E. and I.E. Wei. December 1980. A Study of Aerobic Oxidation and Allied Treatments for Upgrading In Situ Retort Waters, Final Report. DOE/LC 10097-1. U.S. Department of Energy.

Humenick, M.J. 1977. Water and Wastewater Treatment: Calculations for Chemical and Physical Processes. Marcel Dekker, New York.

Jones, B.M., R.H. Sakaji and C.G. Daughton. August 1982. Physicochemical Treatment Methods for Oil Shale Wastewater: Evaluation as Aids to Biooxidation. 15th Oil Shale Symposium Proceedings, Colorado School of Mines, Golden, Colorado.

Kohl, A.L. and F.C. Riesenfeld. 1979. Gas Purification. 3rd ed. Gulf Publishing Company, Houston, Texas.

Krisher, A.S. August 28, 1978. Raw Water Treatment in the CPI. Chemical Engineering. 85(19):78-98.

Maddox, R.N. April 1977. Gas and Liquid Sweetening. Campbell Petroleum Series, 2nd ed. J.M. Campbell, Norman, Oklahoma.

McWhorter, D.B. 1980. Reconnaissance Study of Leachate Quality from Raw Mined Oil Shale--Laboratory Columns. EPA-600/7-80-181. U.S. Environmental Protection Agency.

Mercer, B.W., A.C. Campbell and W. Wakayima. May 1979. Evaluation of Land Disposal and Underground Injection of Shale Oil Wastewaters. U.S. Department of Energy Report No. PNL-2596.

Merrow, E.W. September 1978. Constraints on the Commercialization of Oil Shale. R-2293-DOE. U.S. Department of Energy.

Merrow, E.W., S.W. Chapel and C. Worthing. July 1979. A Review of Cost Estimation in New Technologies: Implications for Energy Process Plants. R-2481-DOE. U.S. Department of Energy.

Metcalf & Eddy Engineers. October 1975. Water Pollution Potential from Surface Disposal of Processed Oil Shale from the TOSCO II Process, Vol. I. Report prepared for Colony Development Operation and Atlantic Richfield Company (Operator).

Nutter, J. and C. Waitman. 1978. Oil Shale Economics Update. Tosco Corporation, Los Angeles, California.

Peabody Process Systems, Inc. February 1981. Paid study on suitability of the Holmes-Stretford Process for Oil Shale Projects. Prepared for Denver Research Institute, Denver, Colorado.

Pearce, R.L. 1978. Hydrogen Sulfide Removal with Methyldiethanolamine. Proceedings of 57th Annual Convention, Gas Producer's Association, New Orleans, Louisiana.

Peat, Marwick, Mitchell & Co. September 1980. Final Report: Oil Shale Tax Study. Prepared for the Committee on Oil Shale, Rocky Mountain Oil and Gas Association. Washington, D.C.

Peters, M.S. and K.D. Timmerhaus. 1980. Plant Design and Economics for Chemical Engineers. 3rd ed. McGraw-Hill.

Peterson, R.W., F.C. Townsend and R.A. Bloomfield. November 1978. Geotechnical Properties of a Fine-Grained Spent Shale Waste. 11th Oil Shale Symposium Proceedings, Colorado School of Mines, Golden, Colorado.

Pforzheimer, H. and S.K. Kunchal. March 24, 1977. Commercial Evaluation of an Oil Shale Industry Based on the Paraho Process. Paper presented to the American Chemical Society National Meeting, New Orleans, Louisiana.

Prien, C.H. and T.D. Nevens. March 1977. An Engineering Analysis Report on the TOSCO II Oil Shale Process. Prepared by Denver Research Institute and TRW, Inc. for U.S. Environmental Protection Agency.

Pritchard Corporation. September 14, 1981. Communication with Stone and Webster Engineering Corporation, Denver, Colorado, regarding information on Claus and SCOT processes.

Rangnow, D.G. and P.A. Fasullo. September 28, 1981. Rapid Growth is Outlook for Recovered Sulfur. Oil and Gas Journal. 79(39):242-246.

Research and Education Association. 1980. Modern Pollution Control Technology. Vol. I: Air Pollution Control. New York.

Resources Conservation Corporation. September 1981. Communication with Water Purification Associates, Cambridge, Massachusetts, regarding information on the vapor compression evaporation process.

Scharmm, L.W. March 1980. United States Shale Oil Forecasts: 1985-1995. DOE/EIA-0183/20. U.S. Department of Energy.

Schmidt-Collérus, J.J., et al. January 1974. The Disposal and Environmental Effects of Carbonaceous Solid Wastes from Commercial Oil Shale Operations. National Science Foundation Report No. GI 34282X1.

Stanfield, K.E., et al. 1951. Properties of Colorado Oil Shale. U.S. Department of the Interior, Bureau of Mines Report No. 4825.

Stone and Webster Engineering Corporation. January 30, 1979. Reference Fossil Power Plant, Book 2B-1.

Tosco Corporation. December 31, 1980. Annual Report to the Securities and Exchange Commission, Washington, D.C., Form 10-K.

Uhl, V.W. June 1979. A Standard Procedure for Cost Analysis of Pollution Control Operations: Vol. II, Appendices. EPA-600/8-79-018b. U.S. Environmental Protection Agency.

U.S. Department of the Interior, Bureau of Land Management. 1977. Final Environmental Impact Statement: Proposed Development of Oil Shale Resources by the Colony Development Operation in Colorado.

U.S. Department of the Interior, Bureau of Mines. August 1981. Minerals and Materials: A Monthly Survey. Washington, D.C.

U.S. Environmental Protection Agency. January 1975. Sulfur Oxides Control Technology Series: Flue Gas Desulfurization -- Wellman-Lord Process. EPA 600/2-75-006.

U.S. Environmental Protection Agency. July 11, 1979. Prevention of Significant Deterioration of Air Quality Conditional Permit granted to Colony Development Operation.

U.S. Environmental Protection Agency. September 1980. Lining of Waste Impoundment and Disposal Facilities. Report No. SW-870.

U.S. Environmental Protection Agency. 1980. Environmental Perspective on the Emerging Oil Shale Industry. EPA-600/2-80-205a.

U.S.S. Engineers and Consultants, Inc. April 1978. Communication with Water Purification Associates, Cambridge, Massachusetts, regarding information on the Phosam-W process.

Wakayima, W. May 1981. Synfuels Processing: Shale Oil Wastewater Treatment by Evaporation. Chemical Engineering Progress. 77:54-60.

Ward, J.C., G.A. Margheim and G.O.G. Löf. December 1971. Water Pollution Potential of Spent Oil Shale Residues. 14030 EDB 12/71. Colorado State University, Fort Collins, Colorado.

Water Purification Associates. December 1975. Innovative Technologies for Water Pollution Abatement. NCWQ 75/13. National Committee on Water Quality, Washington, D.C.

Weiss, M.A., B.C. Ball and R.J. Barbara. June 1979. Shale Oil: Potential Economics of Large-Scale Production, Preliminary Phase. MIT-EL 79-012WP. Massachusetts Institute of Technology, Energy Laboratory, Cambridge, Massachusetts.

Whitcombe, J.A., et al. December 9, 1975. Preheating Oil Shale Prior to Pyrolysis Thereof. U.S. Patent No. 3,925,190.

Whitcombe, J.A. and R.G. Vawter. March 1975. The TOSCO-II Oil Shale Process. Paper prepared for the American Institute of Chemical Engineers, 79th National Meeting, Houston, Texas.

Wilhelmi, A.R. and P.V. Knopp. August 1979. Wet Air Oxidation: An Alternative to Incineration. Chemical Engineering Progress. 75(8):46-52.