EPA-600/8-83-004
April 1983

POLLUTION CONTROL TECHNICAL MANUAL

FOR

MODIFIED IN SITU OIL SHALE RETORTING COMBINED WITH LURGI SURFACE RETORTING

Denver Research Institute
University of Denver
Denver, Colorado 80208

Cooperative Agreement
CR 807294

Program Manager: Gregory G. Ondich
Office of Environmental Engineering and Technology (RD-681)
U.S. Environmental Protection Agency
401 M Street, SW
Washington, DC 20460

Project Officer: Edward R. Bates
Industrial Environmental Research Laboratory - Cincinnati
Cincinnati, Ohio 45268

TECHNICAL REPORT DATA
(Please read Instructions on the reverse before completing)

1. REPORT NO.	2.	3. RECIPIENT'S ACCESSION NO.
4. TITLE AND SUBTITLE POLLUTION CONTROL TECHNICAL MANUAL FOR MODIFIED IN SITU OIL SHALE RETORTING COMBINED WITH LURGI SURFACE RETORTING		5. REPORT DATE February, 1983 6. PERFORMING ORGANIZATION CODE
7. AUTHOR(S) Denver Research Institute		8. PERFORMING ORGANIZATION REPORT NO.
9. PERFORMING ORGANIZATION NAME AND ADDRESS Denver Research Institute University of Denver Denver, CO 80208		10. PROGRAM ELEMENT NO. N104 CZN1A 11. CONTRACT/GRANT NO. CR-807294
12. SPONSORING AGENCY NAME AND ADDRESS Industrial Environmental Research Laboratory 26 W. St. Clair Street Cincinnati, OH 45268		13. TYPE OF REPORT AND PERIOD COVERED Final 14. SPONSORING AGENCY CODE EPA/600/12
15. SUPPLEMENTARY NOTES		

16. ABSTRACT

The oil shale PCTM for Modified In Situ Oil Shale Retorting combined with Lurgi Surface Retorting addresses the application of this combination of technologies to the development of oil shale resources in the western United States. This manual describes the combined plant using Lurgi surface retorting technology (developed by Lurgi Kohle and Mineralotechnik GmbH, West Germany) and the Modified In Situ process (developed by Occidental Oil Shale, Inc.) proposed by Occidental Oil Shale, Inc. and Tenneco Shale Oil Company for use in the development of their Federal oil shale lease Tract C-b in western Colorado. Since details regarding waste streams and control technologies for the Lurgi process are presented in a separate PCTM, this document focuses principally on the Modified In Situ process.

This manual proceeds through a description of the oil shale plant, characterizes the waste streams produced in each medium, and discusses the array of commercially available controls which can be applied to the plant waste streams. From these generally characterized controls, several are examined in more detail for each medium in order to illustrate typical control technology operation. Control technology cost and performance estimates are presented, together with descriptions of the discharge streams, secondary waste streams and energy requirements. A summary of data limitations and needs for environmental and control technology considerations is presented.

17. KEY WORDS AND DOCUMENT ANALYSIS

a. DESCRIPTORS	b. IDENTIFIERS/OPEN ENDED TERMS	c. COSATI Field/Group

18. DISTRIBUTION STATEMENT RELEASE TO PUBLIC	19. SECURITY CLASS *(This Report)* UNCLASSIFIED 20. SECURITY CLASS *(This page)* UNCLASSIFIED	21. NO. OF PAGES 22. PRICE

EPA Form 2220-1 (Rev. 4-77) PREVIOUS EDITION IS OBSOLETE

DISCLAIMER

The information in this document has been funded wholly or in part by the United States Environmental Protection Agency under Cooperative Agreement CR-807294 to the Denver Research Institute, University of Denver. It has been subject to the Agency's peer and administrative review, and it has been approved for publication as an EPA document. Mention of trade names or commercial products does not constitute endorsement or recommendation for use.

FOREWORD

The purpose of the Pollution Control Technical Manuals (PCTMs) is to provide process, discharge, and pollution control data in summarized form for the use of permit writers, developers, and other interested parties. The PCTM series covers a range of alternate fuel sources, including coal gasification, coal liquefaction by direct and indirect processing, and the retorting of oil shale.

The series consists of a set of technical volumes directed at production facilities based upon specific conversion processes. The entire series is supplemented by an appendix volume which describes the operation and application of approximately 50 control processes.

All PCTMs are prepared on a base plant concept (coal gasification and liquefaction) or developers' proposed designs (oil shale) which may not fully reflect plants to be built in the future. The PCTMs present examples of control applications, both as individual process units and as integrated control trains. These examples are taken in part from applicable permit applications and, therefore, are reflective of specific plants. None of the examples are intended to convey an Agency endorsement or recommendation, but rather are presented for illustrative purposes. The selection of control technologies for application to specific plants is the exclusive function of the designers and permitters who have the flexibility to utilize the lowest cost and/or most effective approaches. It is hoped that readers will be able to relate their waste streams and controls to those presented in these manuals to enable them to better understand the extent to which various technologies may control specific waste streams and utilize the information in making control technology selections for their specific needs.

The reader should be aware that the PCTMs contain no legally binding requirements or guidance, and that nothing contained in the PCTMs relieves a facility from compliance with existing or future environmental regulations or permit requirements.

Herbert L. Wiser
Acting Deputy Assistant Administrator
Office of Research and Development
U.S. Environmental Protection Agency

ABSTRACT

The Environmental Protection Agency (EPA), Office of Research and Development, has undertaken an extensive study to determine synthetic fuel plant waste stream characteristics and pollution control systems. The purpose of this and all other PCTMs is to convey this information in a manner that is readily useful to designers, permit writers and the public.

The oil shale PCTM for Modified In Situ Oil Shale Retorting combined with Lurgi Surface Retorting addresses the application of this combination of technologies to the development of oil shale resources in the western United States. This manual describes the combined plant using Lurgi surface retorting technology (developed by Lurgi Kohle und Mineralötechnik GmbH, West Germany) and the Modified In Situ process (developed by Occidental Oil Shale, Inc.) proposed by Occidental Oil Shale, Inc. and Tenneco Shale Oil Company for use in the development of their Federal oil shale lease Tract C-b in western Colorado. Since details regarding waste streams and control technologies for the Lurgi process are presented in a separate PCTM, this document focuses principally on the Modified In Situ process. In Situ plants proposed or built by other developers in the future can be expected to be similar in most aspects to the plant described in this document, but each can be expected to vary in some respects, such as mining methods, selection of particular control technologies, methods for upgrading the raw shale oil, and the selection of a surface retorting technology, if any, combined with the Modified In Situ process.

This manual proceeds through a description of the oil shale plant, characterizes the waste streams produced in each medium, and discusses the array of commercially available controls which can be applied to the plant waste streams. From these generally characterized controls, several are examined in more detail for each medium in order to illustrate typical control technology operation. Control technology cost and performance estimates are presented, together with descriptions of the discharge streams, secondary waste streams and energy requirements. A summary of data limitations and needs for environmental and control technology considerations is presented.

CONTENTS

Foreword iii
Abstract iv
Figures. viii
Tables xi
Abbreviations. xvii
Conversion Factors xx
Acknowledgments. xxii

1. INTRODUCTION. 1
   1.1 PURPOSE. 1
   1.2 APPROACH 2
   1.3 DATA SOURCES 3
   1.4 STATE OF TECHNOLOGY DEVELOPMENT. 4
      1.4.1 Modified In Situ Technology. 4
      1.4.2 Lurgi-Ruhrgas Technology 5
      1.4.3 Start-up Schedule. 5
   1.5 ASSUMPTIONS. 7
      1.5.1 Pollution Control and Performance Estimates. 7
      1.5.2 Components of Pollution Control Cost Estimates . . . 9
   1.6 UNIQUE FEATURES. 11
   1.7 ORGANIZATION AND USE OF THE MANUAL 17

2. SUMMARY OF STUDY FEATURES 27
   2.1 PROCESS OVERVIEW 28
      2.1.1 Site Description 29
      2.1.2 Description of the Plant Complex 35
      2.1.3 Description of the Retorting Processes 35
   2.2 POLLUTION CONTROL CASE STUDIES 45
      2.2.1 Key Features of Pollution Control. 45
      2.2.2 Pollution Control Case Studies 46
   2.3 SUMMARY OF POLLUTION CONTROL TECHNOLOGIES AND COST 53

3. PROCESS FLOW DIAGRAMS AND FLOW RATES. 61
   3.1 STRUCTURE OF THE DIAGRAMS. 61
   3.2 OVERALL PLANT COMPLEX. 61

CONTENTS (cont.)

3.3 UNIT PROCESS FLOW DIAGRAMS 64

3.3.1 Mining, Rubblizing, Crushing, and Transport of Raw Shale 64
3.3.2 Lurgi-Ruhrgas Aboveground Retorting. 68
3.3.3 Lurgi-Ruhrgas Oil Recovery 68
3.3.4 Lurgi Lean Oil Absorber and Naphtha Stripper 70
3.3.5 MIS Retorting and Oil/Water Separation 73
3.3.6 MIS Absorber/Cooler. 73
3.3.7 Stretford Sulfur Process (Case Study B). 75
3.3.8 Phosam-W Ammonia Recovery Process. 75
3.3.9 Power and Steam Generation 78
3.3.10 Flue Gas Desulfurization (Case Study A). 81
3.3.11 Water Management Schemes 81
3.3.12 Solid Waste Management 85

4. INVENTORY AND COMPOSITION OF PLANT PROCESS AND WASTE STREAMS. 91

4.1 INVENTORY OF STREAMS. 91

4.2 MAJOR STREAM COMPOSITIONS 117

4.2.1 Material Balances 117
4.2.2 Raw Oil Shale 119
4.2.3 Processed Shale 121
4.2.4 Crude Shale Oil 128
4.2.5 Retort Gas. 130
4.2.6 Flue Gas. 143
4.2.7 Process Wastewaters. 147
4.2.8 Steam Generation 159

4.3 POLLUTANT CROSS-REFERENCE TABLES 163

5. POLLUTION CONTROL TECHNOLOGY. 171

5.1 AIR POLLUTION CONTROL. 172

5.1.1 Particulate Control. 172
5.1.2 Sulfur Control 188
5.1.3 Nitrogen Oxides Control. 209
5.1.4 Hydrocarbon Control. 216
5.1.5 Carbon Monoxide Control. 223
5.1.6 Control of Other Criteria Air Pollutants 228
5.1.7 Control of Noncriteria Air Pollutants. 229

5.2 WATER MANAGEMENT AND POLLUTION CONTROL 230

5.2.1 Suspended Matter, Oil and Grease 230
5.2.2 Dissolved Gases and Volatiles. 243
5.2.3 Dissolved Inorganics 248
5.2.4 Dissolved Organics 267
5.2.5 Water Requirements 288

CONTENTS (cont.)

5.3 SOLID WASTE MANAGEMENT 296

5.3.1 Disposal Approaches. 296
5.3.2 Surface Hydrology Control Technologies 300
5.3.3 Subsurface Hydrology Control Technologies. 309
5.3.4 Surface Stabilization Technologies 320
5.3.5 Hazardous Waste Control Technologies 325

6. POLLUTION CONTROL COSTS 331

6.1 ENGINEERING COST DATA. 331

6.1.1 Bases of Engineering Cost Data 331
6.1.2 Details of Engineering Costs 336

6.2 COST ANALYSIS METHODOLOGY. 336

6.2.1 Overview of Cost Analysis Methodology. 336
6.2.2 Economic Assumptions Used in Total Cost Calculations. 342
6.2.3 Solid Waste Management Costs 351
6.2.4 Control Cost Example 353

6.3 COST ANALYSIS RESULTS. 354

6.3.1 Results for the Standard Economic Assumptions. . . . 355
6.3.2 Sensitivity Analyses 362

6.4 DETAILS OF COST ANALYSIS METHODOLOGY 378

6.4.1 Cost Algorithms. 378
6.4.2 Example Calculation of a Fixed Charge Factor 380
6.4.3 Cost Levelizing Calculations 382

7. DATA LIMITATIONS AND RESEARCH NEEDS 387

7.1 DATA LIMITATIONS 387

7.2 RESEARCH NEEDS 389

8. REFERENCES. 405

FIGURES

Number		Page
2.1-1	Location of Tract C-b in Piceance Creek Basin	33
2.1-2	Tract C-b site map	34
2.1-3	East-west geologic cross section, Tract C-b	36
2.1-4	Plant complex	37
2.1-5	Mine and in situ retort panel arrangement	38
2.1-6	Modified in situ retort formation	40
2.1-7	Modified in situ retorting	41
2.1-8	Lurgi-Ruhrgas oil shale retorting process	44
2.2-1	Change in retort gas temperature over time for MIS process	47
2.2-2	Process flow diagram, case study A	48
2.2-3	Process flow diagram, case study B	49
3.2-1	Process operations and waste streams	62
3.3-1	Overall plant complex, case study A	65
3.3-2	Overall plant complex, case study B	66
3.3-3	Mining and crushing	67
3.3-4	Lurgi-Ruhrgas retorting	69
3.3-5	Lurgi-Ruhrgas oil recovery	71
3.3-6	Lurgi Naphtha absorber/naphtha stripper	72
3.3-7	MIS retorting, oil/water separation and steam stripping	74
3.3-8	MIS absorber/cooler	76
3.3-9	Stretford sulfur recovery, case study B	77
3.3-10	Phosam-W ammonia recovery unit	79
3.3-11	Power and steam generation, kettle evaporators	80
3.3-12	Flue gas desulfurization, case study A	82
3.3-13	Water management, case study A	83
3.3-14	Water management, case study B	84
3.3-15	Solid waste disposal area	86

FIGURES (cont.)

Number		Page
3.3-16	Overall water management scheme, case study A.	87
3.3-17	Overall water management scheme, case study B.	88
3.3-18	Retort gas condensate and retort water treatment, case studies A & B	89
5.1-1	Particulate control technologies	173
5.1-2	Cost of particulate control with baghouses	182
5.1-3	Cost of particulate control with electrostatic precipitators	183
5.1-4	Cost of particulate control with venturi wet scrubbers	184
5.1-5	Cost of particulate control with spray dryer/baghouse system	186
5.1-6	Sulfur dioxide control technologies.	189
5.1-7	Hydrogen sulfide control technologies.	195
5.1-8	Cost of flue gas desulfurization with limestone scrubbers.	207
5.1-9	Cost of sulfur recovery with Stretford process	208
5.1-10	Nitrogen oxides control technologies	212
5.1-11	Cost of ammonia removal with absorber/cooler	219
5.1-12	Hydrocarbon control technologies	221
5.1-13	Carbon monoxide control technologies	226
5.2-1	Suspended matter, oil and grease control technologies.	232
5.2-2	Cost of mine water clarification	237
5.2-3	Cost of oil/water separation	240
5.2-4	Cost of multimedia gravity filtration.	241
5.2-5	Cost of equalization pond.	244
5.2-6	Dissolved gases and volatiles control technologies	245
5.2-7	Cost of retort water steam stripping	253
5.2-8	Cost of ammonia recovery with Phosam-W process	254
5.2-9	Dissolved inorganics control technologies.	255
5.2-10	Cost of kettle evaporators	261
5.2-11	Cost of boiler feedwater treatment with zeolite resin.	264
5.2-12	Cost of cooling water treatment.	266
5.2-13	Flow scheme for solar evaporation treatment.	268
5.2-14	Cost of solar pond	269
5.2-15	Dissolved organics control technologies.	270

FIGURES (cont.)

Number		Page
5.2-16	Reverse osmosis process flow scheme	278
5.2-17	Cost of organics removal with reverse osmosis	281
5.2-18	Carbon adsorption process flow scheme	282
5.2-19	Cost of organics control with carbon adsorption	285
5.2-20	Wet air oxidation process flow scheme	286
5.2-21	Cost of organics control with wet air oxidation	289
5.3-1	Surface hydrology control technologies	302
5.3-2	Runon diversion costs	304
5.3-3	Typical runoff collection systems	306
5.3-4	Runoff collection and channeling	307
5.3-5	Runoff collection costs	308
5.3-6	Runoff/leachate pond costs	310
5.3-7	Runoff/leachate pond liner costs	311
5.3-8	Subsurface hydrology control technologies	312
5.3-9	Liner costs	316
5.3-10	Leachate collection costs	318
5.3-11	Groundwater collection costs	319
5.3-12	Surface stabilization technologies	321
5.3-13	Dust control costs	324
5.3-14	Reclamation and revegetation costs	326
5.3-15	Hazardous waste control technologies	327
6.0-1	Interrelationships among various cost and economic terms	332
6.3-1	Sensitivity analyses for case study A: total air pollution control costs	370
6.3-2	Sensitivity analyses for case study A: total water pollution control costs	371

TABLES

Number		Page
1.4-1	Production Data for MIS-Lurgi Project	6
1.5-1	Performance Levels Estimated for Major Pollution Controls	8
1.5-2	Components of Fixed Capital Cost Estimates	10
1.5-3	Components of Direct Annual Operating Cost Estimates	11
1.5-4	Summary of Major Standard Economic Assumptions Used in Control Cost Evaluations	12
1.6-1	Major Features of the Oil Shale PCTMs	13
1.6-2	Pollution Control Technologies Examined in the Oil Shale PCTMs	15
1.7-1	Composite List of Streams	19
2.1-1	Major Parameters Defining the Size of the Commercial Plant Complex	30
2.1-2	Shale Oil Production Schedule for the Start-up Period	31
2.3-1	Summary of Pollution Control Technologies	54
2.3-2	Inventory of Major Pollution Control Technologies	55
2.3-3	Pollution Control Cost Summary	58
4.1-1	Inventory of Gaseous Streams	92
4.1-2	Compositions of Gaseous Streams	97
4.1-3	Inventory of Liquid Streams	105
4.1-4	Compositions of Liquid Streams	111
4.1-5	Inventory of Solid Streams	115
4.1-6	Compositions of Solid Streams	116
4.2-1	Gross Material Balance for MIS Retort	118
4.2-2	Gross Material Balance for Lurgi Retort	119
4.2-3	Composition of Raw Shale in MIS Retorts	120
4.2-4	Composition of Raw Shale for Lurgi Retorts	120
4.2-5	Laboratory Column Leachates from Some Colorado Raw Oil Shales	122

TABLES (cont.)

Number		Page
4.2-6	Composition of MIS Processed Shale	123
4.2-7	Composition of Lurgi Processed Moisturized Shale	123
4.2-8	Inorganic Analysis of Lurgi Processed Shale	124
4.2-9	Physical Properties of Lurgi Retorted Shale	125
4.2-10	Concentrations of Dissolved Species in the Leachate from MIS Processed Shale	126
4.2-11	Comparison of Concentration Range of Macro Ions Found in First Fraction of Leachates from Occidental's MIS Core Samples and Aboveground Retorted Shale	127
4.2-12	Analysis of Leachate from Lurgi Processed Shale	128
4.2-13	Properties of MIS Crude Shale Oil	129
4.2-14	Properties of Naphtha-Free Shale Oil from Lurgi Retorting	131
4.2-15	Composition of MIS Retort Gas	132
4.2-16	Composition of MIS Retort Gas After Absorber/Cooler	133
4.2-17	Composition of Lurgi Retort Vapors	134
4.2-18	Composition of Lurgi Retort Gas After Middle Oils Scrubber	135
4.2-19	Composition of Lurgi Retort Gas After Light Oils Scrubber	136
4.2-20	Composition of Naphtha-Free Lurgi Retort Gas	137
4.2-21	Reported Analysis of Naphtha-Free Lurgi Retort Gas	138
4.2-22	Composition of Lurgi Naphtha	139
4.2-23	Composition of MIS Retort Gas After Stretford Precooler, Case Study B	140
4.2-24	Composition of MIS Retort Gas After Stretford Process, Case Study B	141
4.2-25	Composition of Lurgi Retort Gas After Stretford Process, Case Study B	142
4.2-26	Other Streams from Stretford Process, Case Study B	143
4.2-27	Selected Sulfur Species in Retort Gas from Rio Blanco MIS Retort Zero Burn	144
4.2-28	Composition of Flue Gas from the Combined Retort Gases Before and After FGD, Case Study A	145
4.2-29	Retorted Composition of Flue Gas, Case Study A	146
4.2-30	Composition of Flue Gas from the Combined Stretford Treated Retort Gases, Case Study B	147

TABLES (cont.)

Number		Page
4.2-31	Composition of Flue Gas from Lurgi Lift Pipes	148
4.2-32	Reported Composition of Lurgi Flue Gas	148
4.2-33	Composition of MIS Gas Condensate	150
4.2-34	Composition of Lurgi Gas Liquor	151
4.2-35	Composition of Total Feed to Phosam-W Ammonia Recovery Process, Case Study A	152
4.2-36	Material Balance Around Phosam-W Ammonia Recovery Process, Case Study A	153
4.2-37	Material Balance Around Lurgi Waste Heat Recovery Boiler, Case Study A	154
4.2-38	Composition of Total Feed to Phosam-W Ammonia Recovery Process, Case Study B	155
4.2-39	Material Balance Around Phosam-W Ammonia Recovery Process, Case Study B	156
4.2-40	Material Balance Around Lurgi Waste Heat Recovery Boiler, Case Study B	157
4.2-41	Composition of Retort Water for MIS Process	158
4.2-42	Other Properties of Retort Water from MIS Process	159
4.2-43	Material Balance for the Retort Water Around Steam Stripper	160
4.2-44	Material Balance for Kettle Evaporators, Case Study A	161
4.2-45	Material Balance for Kettle Evaporators, Case Study B	162
4.3-1	Pollutant Cross-Reference for Gaseous Streams	164
4.3-2	Pollutant Cross-Reference for Liquid Streams	166
4.3-3	Pollutant Cross-Reference for Solid Streams	169
5.1-1	Key Features of Particulate Control Technologies	174
5.1-2	Particulate Control Equipment and Design Parameters	179
5.1-3	Major Items in Electrostatic Precipitator	180
5.1-4	Cost of Particulate Pollution Control	181
5.1-5	Major Items in the Spray Dryer/Baghouse System	185
5.1-6	Total Particulate Emissions from the Plant	187
5.1-7	Key Features of Sulfur Dioxide Control Technologies	190
5.1-8	Key Features of Hydrogen Sulfide Control Technologies	196
5.1-9	Major Items in the Limestone FGD Process	203

TABLES (cont.)

Number		Page
5.1-10	Major Items in the Holmes-Stretford Process	204
5.1-11	Cost of Sulfur Pollution Control	206
5.1-12	Total SO_2 Emissions from the Plant	210
5.1-13	Key Features of Nitrogen Oxides Control Technologies	213
5.1-14	Major Items in MIS Retort Gas Absorber/Cooler	217
5.1-15	Cost of Nitrogen Oxides Pollution Control	218
5.1-16	Total NOx Emissions from the Plant	220
5.1-17	Key Features of Hydrocarbon Control Technologies	222
5.1-18	Hydrocarbon Control Practices and Equipment	223
5.1-19	Cost of Hydrocarbon Pollution Control	224
5.1-20	Total Hydrocarbon Emissions from the Plant	225
5.1-21	Key Features of Carbon Monoxide Control Technologies	227
5.1-22	Total CO Emissions from the Plant	228
5.1-23	Estimated Emissions of Other Criteria Pollutants	229
5.2-1	Key Features of Control Technologies for Suspended Matter, Oils and Greases	233
5.2-2	Design and Cost of Mine Water Clarification	236
5.2-3	Design and Cost of API Oil/Water Separator for Process Waters	238
5.2-4	Design and Cost of Multimedia Gravity Filtration Unit	239
5.2-5	Design and Cost of API Oil/Water Separator for Runoffs and Leachate	242
5.2-6	Design and Cost of Equalization Pond	243
5.2-7	Key Features of Control Technologies for Dissolved Gases and Volatiles	246
5.2-8	Design and Cost of Retort Water Steam Stripper	249
5.2-9	Design of Phosam-W Ammonia Recovery System	250
5.2-10	Cost of Ammonia Recovery by Phosam-W Process	252
5.2-11	Key Features of Control Technologies for Dissolved Inorganics	256
5.2-12	Design and Cost of Kettle Evaporators	260
5.2-13	Design and Cost of Boiler Feedwater Treatment	263
5.2-14	Design and Cost of Cooling Water Treatment	265
5.2-15	Design and Cost of Solar Evaporation Pond	267

TABLES (cont.)

Number		Page
5.2-16	Key Features of Control Technologies for Dissolved Organics	271
5.2-17	Composition of Stripped Retort Water Before and After Reverse Osmosis Treatment	279
5.2-18	Design and Cost of Reverse Osmosis Treatment of Stripped Retort Water	280
5.2-19	Composition of Process Waters Before and After Carbon Adsorption Treatment	283
5.2-20	Design and Cost of Activated Carbon Adsorption for Process Waters	284
5.2-21	Composition of Stripped Retort Water RO Concentrate Before and After WAO Treatment	287
5.2-22	Design and Cost of Wet Air Oxidation of Stripped Retort Water RO Concentrate	288
5.2-23	Steam Production, Uses and Boiler Feedwater Needs	291
5.2-24	Water Quality Parameters for Boiler Feedwater	292
5.2-25	Plant Cooling Water Requirements	292
5.2-26	Water Quality Parameters for Cooling Tower Recirculation	293
5.2-27	Water Requirements for Processed Shale Disposal and Dust Control	294
5.2-28	Potable and Service Water Requirements	295
5.3-1	Major Wastes Produced Over a Period of 30 Years	297
5.3-2	Key Features of Solid Waste Disposal Approaches	298
5.3-3	Key Features of Surface Hydrology Control Technologies	303
5.3-4	Key Features of Subsurface Hydrology Control Technologies	313
5.3-5	Key Features of Surface Stabilization Technologies	322
5.3-6	Key Features of Hazardous Waste Control Technologies	328
6.1-1	Detailed Engineering Costs for Air Pollution Controls	337
6.1-2	Detailed Engineering Costs for Water Pollution Controls, Case Study A	338
6.1-3	Detailed Engineering Costs for Water Pollution Controls, Case Study B	339
6.1-4	Engineering Costs and Timing of Solid Waste Management Activities	340
6.2-1	Summary of Standard Cost and Economic Assumptions	344
6.2-2	Economic Assumptions that Vary from Control to Control	345

TABLES (cont.)

Number		Page
6.2-3	Fixed Capital and Direct Annual Operating Costs for Solid Waste Management.	352
6.2-4	Per-Barrel Cost Breakdown for Stretford System.	353
6.3-1	Summary of Pollution Control Costs for Standard Economic Assumptions	356
6.3-2	Pollution Control Costs, by Control Group, for the Standard Economic Assumptions	357
6.3-3	Control Groupings	358
6.3-4	Details of Air Pollution Control Costs, Standard Economic Assumptions	360
6.3-5	Details of Water Pollution Control Costs, Standard Economic Assumptions	361
6.3-6	Details of Solid Waste Management Costs, Standard Economic Assumptions	363
6.3-7	Assumptions for Sensitivity Analyses.	364
6.3-8	Charge Rates for Sensitivity Analyses	365
6.3-9	Sensitivity Analyses Expressed as a Percentage of Shale Oil Value.	366
6.3-10	Sensitivity Analyses by Control Group	367
6.4-1	Example of Fixed Charge Factor Calculation.	381
7.1-1	Data Limitations and Research Needs	390

ABBREVIATIONS

°API	-- gravity (American Petroleum Institute)
ACF	-- actual cubic feet
ACFM	-- actual cubic feet per minute
ACRS	-- accelerated cost recovery system
ADA	-- anthraquinone disulfonic acid
ADR	-- asset depreciation range
AMB	-- ambient
BACT	-- best available control technology
BOD	-- biochemical oxygen demand
BP	-- annual by-product credit
BPCD	-- barrels per calendar day
BPSD	-- barrels per stream day
CA	-- carbon adsorption
CC	-- total annual capital charge
CMLRB	-- Colorado Mined Land Reclamation Board
COD	-- chemical oxygen demand
CPB	-- per-barrel control cost
CS/SS	-- carbon steel/stainless steel
DCF	-- discounted cash flow
DCF ROR	-- discounted cash flow rate of return
DDP	-- Detailed Development Plan
DEA	-- diethanolamine
DGA	-- diglycolamine
DIPA	-- diisopropanolamine
DOC	-- direct annual operating cost
DRI	-- Denver Research Institute
ED	-- electrodialysis
ESC	-- annual extra start-up costs

ABBREVIATIONS (cont.)

ESP	-- electrostatic precipitator
FCC	-- fixed capital cost
FGD	-- flue gas desulfurization
FGR	-- flue gas recirculation
fpm	-- feet per minute
gpm	-- gallons per minute
gpt	-- gallons per ton
HP	-- horsepower
IBP	-- initial boiling point
IOC	-- indirect annual operating cost
ITC	-- investment tax credit
LHV	-- low heating value
LTPSD	-- long tons per stream day
MDEA	-- methyldiethanolamine
MEA	-- monoethanolamine
MEB	-- multiple effect boiling
MIS	-- Modified In Situ
MMBtu	-- million British thermal units
MMSCFD	-- million standard cubic feet per day
MSF	-- multistage flash
MTPSD	-- metric tons per stream day
MW	-- megawatts
MWt	-- molecular weight
pcf	-- pounds per cubic foot
pCi/l	-- picocuries per liter
PCTM	-- Pollution Control Technical Manual
POM	-- polynuclear organic matter
ppmv	-- parts per million, by volume
ppmw	-- parts per million, by weight
PSD	-- Prevention of Significant Deterioration
psia	-- pounds per square inch, absolute
psig	-- pounds per square inch, gauge
RF	-- fixed capital charge rate

ABBREVIATIONS (cont.)

RHC	-- reactive hydrocarbons
RO	-- reverse osmosis
RSH	-- alkyl thiols, mercaptans
RW	-- working capital charge rate
SCF	-- standard cubic foot
SCFM	-- standard cubic feet per minute
SCOT	-- Shell Claus Off-gas Treating
SCR	-- selective catalytic reduction
SEA	-- standard economic assumptions
SNPA/DEA	-- Societe Nationale des Petroles d'Aquitaine/ diethanolamine
SS	-- stainless steel
STC	-- annual severance tax credit
SWEC	-- Stone and Webster Engineering Corporation
TC	-- total annual control cost
TDS	-- total dissolved solids
TIA	-- annual property tax and insurance allowance
TOC	-- total annual operating cost
TPCD	-- tons per calendar day
TPM	-- total particulate matter
TPSD	-- tons per stream day
TPY	-- tons per year
TSS	-- total suspended solids
UF	-- ultrafiltration
USBM	-- U.S. Bureau of Mines
VCE	-- vapor compression evaporation
VOC	-- volatile organic compounds
WAO	-- wet air oxidation
WC	-- working capital
WPA	-- Water Purification Associates

CONVERSION FACTORS

1 pound, lb	=	453.5924 grams, g 0.4536 kilograms, kg
1 ton	=	0.9072 metic tons, tonnes
1 inch, in	=	2.5400 centimeters, cm
1 foot, ft	=	30.4800 centimeters, cm 0.3048 meters, m
1 mile, mi	=	1,609.3440 meters, m 1.6093 kilometers, km
1 square inch, in^2	=	6.4516 square centimeters, cm^2
1 square foot, ft^2	=	0.0929 square meters, m^2
1 square mile, mi^2	=	2.5900 square kilometers, km^2 258.9988 hectares, ha
1 acre	=	4,046.8564 square meters, m^2 0.4047 hectares, ha
1 cubic inch, in^3	=	16.3871 cubic centimeters, cm^3
1 cubic foot, ft^3	=	28.3161 liters, l
1 gallon, gal	=	3.7853 liters, l 0.0038 cubic meters, m^3
1 barrel, bbl	=	158.9828 liters, l 0.1590 cubic meters, m^3
1 acre-foot	=	1,233.4818 cubic meters, m^3
1 pound/square inch, psi	=	70.3070 grams/square centimeter, g/cm^2 0.0680 atmospheres, atm 0.3591 millimeters of mercury, mm of Hg
1 pound/cubic inch, lb/in^3	=	27.6799 grams/cubic centimeter, g/cm^3 27.6807 grams/milliliter, g/ml

CONVERSION FACTORS (cont.)

1 pound/cubic foot, pcf, lb/ft^3	=	0.0160 grams/cubic centimeter, g/cm^3 16.0185 kilograms/cubic meter, kg/m^3
1 gallon per ton, gpt	=	4.1726 liter/tonne, l/tonne
1 barrel per day, BPD	=	0.1590 cubic meters/day, m^3/d
1 gallon per minute, gpm	=	0.0631 liters/second, l/s
1 British thermal unit, Btu	=	251.9958 gram-calories, g-cal 1,054.1800 joules, J
1 million British thermal units, MMBtu	=	292.8750 kilowatt-hours, kW-hr
1 British thermal unit/pound, Btu/lb	=	0.5556 gram-calories/gram, g-cal/g
1 British thermal unit/cubic foot, Btu/ft^3	=	8.8994 gram-calories/liter, g-cal/l

ACKNOWLEDGMENTS

This Pollution Control Technical Manual was prepared for the EPA by the Denver Research Institute (DRI), University of Denver, Denver, Colorado, under EPA Cooperative Agreement CR-807294. Subcontractor support was provided to DRI by Stone and Webster Engineering Corporation (SWEC) of Denver, Colorado, and Water Purification Associates (WPA) of Cambridge, Massachusetts. The project manager for DRI was Mr. Kishor Gala, Chemical and Materials Sciences Division.

SECTION 1

INTRODUCTION

1.1 PURPOSE

Future U.S. energy production envisions the development of an environmentally acceptable, commercial synthetic fuels industry. As part of this overall effort, the Environmental Protection Agency (EPA), Office of Research and Development, has for the past several years undertaken extensive studies to determine synthetic fuel plant waste stream characteristics and potentially applicable pollution control systems.

The purpose of the Pollution Control Technical Manuals (PCTMs) is to convey, in a summarized and readily useful manner, information on synfuel waste stream characteristics and pollution control technology as obtained from studies by the EPA and others. The documents provide waste stream characterization data and describe a wide variety of pollution controls in terms of estimated performance, cost and reliability. The PCTMs contain no legally binding requirements, no regulatory guidance, and include no preference for process technologies or controls. Nothing within these documents relieves a facility from compliance with existing or future environmental regulations or permits.

The Pollution Control Technical Manuals consist of a set of seven discrete documents. There are six process specific PCTMs and a more general appendix volume which describes over fifty pollution control technologies. Application of pollution controls to a particular synfuel process is described in each process specific manual. The seven manuals are:

- *Pollution Control Technical Manual for Lurgi Based Indirect Coal Liquefaction and SNG*
- *Pollution Control Technical Manual for Koppers-Totzek Based Indirect Coal Liquefaction*
- *Pollution Control Technical Manual for Exxon Donor-Solvent Direct Coal Liquefaction*
- *Pollution Control Technical Manual for Lurgi Oil Shale Retorting with Open Pit Mining*
- *Pollution Control Technical Manual for Modified In Situ Oil Shale Retorting Combined with Lurgi Surface Retorting*

- *Pollution Control Technical Manual for TOSCO II Oil Shale Retorting with Underground Mining*

- *Control Technology Appendices for Pollution Control Technical Manuals*

By focusing on specific process technologies, the PCTMs attempt to be as definitive as possible on waste stream characteristics and control technology applications. This focus does not imply any EPA recommendations for particular process or control designs. Those described in the manuals are intended as representative examples of processes and control technologies that might be used. The design of the PCTMs, from process description through waste stream characterization and control technology evaluation, is intended to provide the user with a comprehensive understanding of the environmental factors inherent in operating synthetic fuel plants.

Control technology discussions presented in the PCTMs reflect pollutant removal levels which are believed to be achievable with currently available control technologies based upon existing data. Since there are no domestic commercial-scale synfuels facilities, the data base supporting this document was derived from bench- and pilot-scale synfuel facilities, developer's estimates, engineering analyses and analogue industries. As commercial synthetic fuel plants are built, the EPA will continue conducting research in order to develop a more comprehensive data base. Based on findings from these future studies, the Agency may update these documents or promulgate industry specific standards. In the interim, the Agency encourages facility planners, permit officials, and other interested parties to take advantage of the information contained in these documents.

1.2 APPROACH

The approach taken in developing this manual is to describe, in detail, an oil shale facility which has been proposed for development and to emphasize its pollution control aspects. This facility is the basis for the case studies described in Section 2 "Summary of Study Features," Section 3 "Process Flow Diagrams and Flow Rates," and Section 4 "Inventory and Composition of Plant Process and Waste Streams." The process descriptions and control technologies presented in these case studies are based on documents (identified in Section 1.3) published by the proposed facility developers and parallel, as closely as possible, the current thinking of the developers.

This manual examines combined Modified In Situ (underground) and Lurgi-Ruhrgas aboveground retorting processes as proposed by Cathedral Bluffs Shale Oil Company for development of Federal Lease Tract C-b in the Piceance Basin of Colorado. It should be noted, however, that the company is currently reassessing the project due to increased construction costs, reduced oil prices and high interest rates, although activities required per the Federal lease agreement are being continued.

In order to enhance the flexibility of this manual, and since oil shale development plans are continually changing, Section 5 "Pollution Control

Technology" expands beyond the description of the case studies to examine other pollution control technologies and approaches that may be applicable to the waste sources identified in the case studies. While controls applied to major gaseous, liquid, and solid streams described in the case study are those which have been proposed by the developer, Section 5 also examines alternative pollution control technologies on a stream-by-stream basis. For each stream receiving control, all major control technologies are discussed, while some example technologies are analyzed in considerable depth. Stream flow rates and pollutant characteristics are used in estimating the size, performance, and cost of the controls, and secondary streams resulting from the pollution control activities are identified.

1.3 DATA SOURCES

This manual focuses on the plans that have emerged over the past few years for the development of Federal Lease Tract C-b. The operation of the tract is monitored under the Federal Prototype Oil Shale Leasing Program through the U.S. Department of Interior's Minerals Management Service. Under this program, a Detailed Development Plan (DDP), modifications to the DDP, and extensive environmental information must be submitted on a regular basis to the Minerals Management Service by the lease operators. The DDP and subsequent modifications to the DDP submitted by the developers of Tract C-b were the principal data sources used to prepare the case studies described in Sections 2, 3 and 4 of this manual.

The first commercial development plan, or DDP, for Tract C-b was published in 1976 (Ashland Oil, Inc. and Shell Oil Co., February 1976). This plan called for the production of approximately 45,000 barrels of hydrotreated shale oil per day using the TOSCO II retorting technology. (Essentially the same plan has been analyzed in the TOSCO II PCTM.) Subsequent to certain issues raised by the Area Oil Shale Office (now part of the Minerals Management Service) regarding the original plan, the tract developers submitted a modification to the DDP (Ashland Oil, Inc. and Occidental Oil Shale, Inc., February 1977). This revised plan specified Modified In Situ (MIS) retorting technology but no aboveground retorting. Finally, a third plan was presented in the Prevention of Significant Deterioration (PSD) permit application (Occidental Oil Shale, Inc. and Tenneco Shale Oil Co., April 1981). This latest plan is based on using MIS technology in conjunction with the Lurgi-Ruhrgas aboveground retorting technology.

These three documents were the major sources used in deriving the process, pollution control, and other information presented in this manual, with the PSD permit application being the primary source. In addition, several supplemental sources were used and they are cited throughout the manual.

Where available, actual data from the various scale operations in oil shale processing were used. It is believed that these data accurately reflect the major technical features which will be encountered in a commercial oil shale industry. In addition, technologies from analogue industries are transferred, when appropriate. When necessary, engineering

analysis and judgment provided by the authors of this manual (Denver Research Institute, Stone and Webster Engineering Corporation and Water Purification Associates) and vendor information were used. In each case, all assumptions required to carry out the analyses are listed, and areas lacking hard data are identified (see Sections 1.5 and 7 for more detailed discussions).

1.4 STATE OF TECHNOLOGY DEVELOPMENT

The processing plant considered in this manual is essentially the same as the one in the latest plan proposed for the Tract C-b development. Two different retorting technologies--the MIS and Lurgi-Ruhrgas processes--will be used simultaneously to produce a total of 117,000 barrels per stream day (BPSD) of crude shale oil. The MIS process will produce 69,000 BPSD of oil by retorting the shale in place underground. Approximately 62,000 tons per stream day (TPSD) of raw shale will need to be mined out to facilitate the underground retorting. The mined out shale will then be processed aboveground in seven Lurgi-Ruhrgas retorts to produce an additional 48,000 BPSD of oil. The shale left in place will have an average oil yield of 26.7 gallons per ton (gpt) based on the modified Fischer assay and it will be retorted at an efficiency equal to 60% of the assay. The mined shale will have an average oil yield of 32.7 gpt and it will be retorted at 100% of the Fischer assay efficiency. (The stream-day rates are the maximum, 24-hr/day rates that can be achieved; however, occasional equipment failure and required maintenance can result in a reduced production efficiency. To overcome this potential problem, Cathedral Bluffs has proposed building oversized processing trains and including spare, or standby, equipment so that maximum production can be maintained on a long-term basis. Thus, the plant will operate for 365 calendar days per year at 100% of its capacity, i.e., the calendar-day rates will be the same as the stream-day rates.) The current status of the retorting technologies is reviewed below.

1.4.1 Modified In Situ Technology

Pilot MIS retorts have been operated since 1976 in the Logan Wash area of Piceance Creek Basin in efforts to bring the technology to the stage of commercial development (Ashland Oil, Inc. and Occidental Oil Shale, Inc., February 1977; Loucks, November 1979). To date, six retorts of varying sizes have been processed, and a variety of rubblizing and operating techniques have been tested. (Two additional retorts, Rooms 7 and 8, were ignited during the spring of 1982, but the data are not yet available.) The last completed burn, Room 6, experienced difficulties at the beginning and end of operations, but it also had an extended period of stable operations similar to what might be expected in a commercial facility (Loucks, November 1979).

The retort sizes and rubblizing techniques used for Rooms 5 to 8 are comparable to those planned for the Tract C-b commercial development (for instance, Room 6 measured 164 feet by 164 feet by 334 feet high, compared to the proposed size of 165 feet by 165 feet by 290 feet high for the commercial retorts), but the commercial development will involve simultaneous processing of 96 retorts. Previous experience with the MIS retorts has involved only single retort firing (although Rooms 7 and 8 have been

processed simultaneously); therefore, the firing of 96 retorts will present a tremendous scale-up in the necessary equipment and activities.

It should be noted that the Logan Wash site differs significantly from Federal Lease Tract C-b. The pilot retorts have operated on shale that yields about 15 gpt of ore when measured by Fischer assay. The shale to be retorted at Tract C-b is significantly richer--an average oil yield of 26.7 gpt. It is also suspected that the different mineralogy of the ore at the tract may produce a higher level of sulfur species in the retort gas (Sklarew, et al., February 1981). Furthermore, Tract C-b contains substantial quantities of groundwater (Ashland Oil, Inc. and Shell Oil Co., February 1976), while Logan Wash is dry. Although aquifer dewatering will be carried out through the project life at Tract C-b, some infiltration problems may be anticipated.

1.4.2 Lurgi-Ruhrgas Technology

Small Lurgi-Ruhrgas pilot plants have been operated by Lurgi Kohle und Mineralötechnik GmbH in West Germany. The necessity to ship ore to West Germany has limited the amount of available test data. To date, the experience relevant to this manual is limited to three tests: one in 1976 on shale from the Colony mine in Colorado, and two in 1980 on shales from Tracts C-b and C-a. The earlier (1976) test was run in a 5-ton/day pilot plant, while the 1980 tests were performed in a 25-ton/day plant. Data from the 1980 test on Tract C-b shale, published in the PSD permit application for the Cathedral Bluffs project, were used in this manual (Occidental Oil Shale, Inc. and Tenneco Shale Oil Co., April 1981). Tests have been run on other shales and reported in the literature (Marnell, September 1976; Schmalfeld, July 1975), but substantially different results were obtained.

A Lurgi-Ruhrgas demonstration plant processing 4,400 TPSD of shale on Tract C-a was proposed (Rio Blanco Oil Shale Co., February 1981), but these plans were suspended indefinitely during the summer of 1981 in favor of building and operating a 5-ton/day pilot plant at Gulf Oil Corporation's research facility in Pennsylvania.

1.4.3 Start-up Schedule

Table 1.4-1 shows the start-up profile for the MIS-Lurgi project based on information provided by Occidental Oil Shale, Inc. The shale which is mined in creating the MIS retorts will be processed on the surface using the Lurgi-Ruhrgas technology. During the first year, the MIS processing will have an average oil production equal to the amount which could be produced by burning two to three retorts at once. Additional retorts will be added until a full panel of 96 retorts can be simultaneously operated in the seventh year. At this point the retort design will be changed, allowing the number of retorts operating to be decreased to 48; each retort will be substantially larger (more than twice the size of the smaller retorts), increasing the oil output. As the scale of the MIS operation increases, surface facilities for handling the MIS retort gas and for retorting the mined shale will be brought on stream.

TABLE 1.4-1. PRODUCTION DATA FOR MIS-LURGI PROJECT

Year	1	2	3	4	5	6	7	8-30
Retort Trains Operational at Year End								
MIS	2	2	3	4	5	5	5	5
Lurgi	1	1	2	4	6	8	8	8
Shale Grade								
MIS (gpt)	26.7	26.7	26.7	26.7	26.7	26.7	26.7	26.7
Lurgi (gpt)	17	19	20.6	21.8	23.0	24.3	26.2	32.7
Retorting Yield								
MIS (%)	60	60	60	60	60	60	60	60
Lurgi (%)	100	100	100	100	100	100	100	100
Lurgi Shale Handled								
Raw (TPSD)	4,550	6,680	11,070	23,250	43,770	59,890	61,940	61,730
Processed (TPSD)	4,090	5,940	9,740	20,350	38,080	51,800	52,650	50,750
Average Daily Oil Production								
MIS (BPCD)	1,580*	9,070	27,400	42,680	55,180	55,180	55,180	69,040
Lurgi (BPCD)	1,840*	3,020	5,430	12,070	23,970	34,650	38,640	48,060
TOTAL (BPCD)	3,420*	12,090	32,830	54,750	79,150	89,830	93,820	117,100
Annual Oil Production								
MIS (10^3 bbl)	380	3,310	10,000	15,578	20,140	20,140	20,140	25,200
Lurgi (10^3 bbl)	441	1,102	1,983	4,407	8,749	12,649	14,104	17,542
TOTAL (10^3 bbl)	821	4,412	11,983	19,985	28,889	32,789	34,244	42,742

* Operates for 8 months only.

Source: Calculated by DRI from data provided by Occidental Oil Shale, Inc.

The plant will eventually use five surface trains for handling the MIS gas and a total of eight (seven operational and one stand-by) Lurgi retorts for processing the mined shale. The Lurgi retorts will process shale of increasing grade, up to a maximum of 32.7 gpt at full scale. Ultimately, the mining plan will allow high grading of the ore brought to the surface. The full-scale operation may be reached in eight years. As stated earlier, the MIS processing equipment will be built 25% oversize and one Lurgi train will be on stand-by at all times. This would allow servicing of the equipment without affecting production. Therefore, the commercial MIS-Lurgi facility will produce 117,000 barrels per calendar day (BPCD) of oil.

1.5 ASSUMPTIONS

In performing a detailed analysis of the MIS and Lurgi processes and associated operations, a number of specific assumptions which influence the results of the analysis and their interpretation were made. The underlying, major assumptions relating to pollution control performance and cost, as well as the bases behind the assumptions, are summarized in this section.

1.5.1 Pollution Control and Performance Estimates

In the process of preparing this manual, applicable pollution control technologies for different waste streams were reviewed, and controls proposed by industry were evaluated to the point that performance and cost could be estimated. Equipment vendors' estimates and guarantees were used whenever available. Other performance levels were estimated using laboratory testing data. These performance estimates should be viewed tentatively because very little data based on actual source testing exist. The major pollution controls evaluated in this manual are presented in Table 1.5-1, along with the performance levels estimated as a result of the analysis.

The major air pollution control technologies evaluated (Flue Gas Desulfurization, Stretford) are commercially available and are used in other industries at a scale smaller than that indicated in this manual; therefore, multiple units will be required. Nevertheless, operational difficulties in adapting these technologies to oil shale processing are not expected to be great and may primarily involve adapting these technologies to oil shale off-gas characteristics.

In the area of water pollution control, it has been proposed by the developer that the plant will achieve zero-discharge of process generated waters. The processing plant will be water consumptive, and the required amount of water will be obtained by mine dewatering. The process waters are treated to the degree necessary for reuse. The technologies considered (steam stripping, Phosam-W ammonia recovery, kettle evaporators) have been used in analogue industries and can be expected to be employed successfully in the oil shale industry. Waters used in auxiliary plant operations are also treated since the wastes produced from these operations may be used in processed shale moistening and thus may become a source of pollution. Reuse of some waters may negate a need for pollution control; in such cases, no pollution controls in a conventional sense are applied.

TABLE 1.5-1. PERFORMANCE LEVELS ESTIMATED FOR MAJOR POLLUTION CONTROLS

Control Description	Pollutant Controlled	Control Level Estimated
AIR POLLUTION CONTROL		
Baghouses	Raw and Processed Shale Dust	99.5%
Water Sprays	Raw and Processed Shale Dust	50%
Foam Sprays	Raw and Processed Shale Dust	85-98.5%[a]
Venturi Wet Scrubber	Processed Shale Dust	99% @ ΔP = 5" of water
Electrostatic Precipitator	Processed Shale Dust	99.9%
FGD Limestone Scrubber	SO_2	50 ppmv[b]
Adsorber/Cooler	NH_3	90%
Holmes-Stretford Gas Treating Process	H_2S	30 ppmv[c]
	COS	15%[d]
	CS_2	0%[d]
	RSH	70%[d]
WATER POLLUTION CONTROL		
Retort Water Stripper	NH_3	96%[e]
	H_2S	~100%[e]
	Organic Matter	Gas Condensate: 83%[e]
		Retort Water: 20%[e]
Kettle Evaporator	TDS	~100%[d]
	Organic Matter	70%[d]
Phosam-W Ammonia Recovery Process	NH_3	92.5%[f]
SOLID WASTE MANAGEMENT		
Surface Landfill	Processed Shale, Sludges, Blowdowns, Concentrates, etc.	N/A

[a] The dust removal efficiency of the foam sprays varies depending upon the application.

[b] Reduction of SO_2 to 50 ppmv in the flue gas was specified by the vendor. Cathedral Bluffs has estimated that SO_2 is reduced by 95 wt %.

[c] Based on Peabody Process Systems, Inc., February 1981.

[d] DRI estimates.

[e] Estimates from treatability studies on similar waters conducted by Water Purification Associates, unpublished.

[f] WPA estimates based on information provided by U.S.S. Engineers and Consultants, Inc., April 1978.

Source: Occidental Oil Shale Inc. and Tenneco Shale Oil Co., April 1981, except as noted.

Solid wastes are managed using a surface landfill, as proposed in the Cathedral Bluffs PSD permit application. The surface hydrology control technologies, such as a runon catchment dam, runoff collection system, etc., and surface stabilization technologies, such as grubbing and stripping, revegetation, etc., are traditional practices associated with solid waste management. There is insufficient information regarding the developer's plan for control of subsurface drainage; therefore, the total cost of pollution control for solid wastes cannot be determined.

1.5.2 Components of Pollution Control Cost Estimates

Fixed capital and direct annual operating costs were estimated for each piece of pollution control equipment and each control activity. These figures were then used, along with economic assumptions, to calculate total annual control costs which include an annual charge for capital. The total annual capital charge provides for a required after-tax return on investment of 12 percent. The approach used to estimate the capital and operating costs and the economic analysis techniques applied to these data are summarized in Tables 1.5-2 through 1.5-4.

Fixed capital and direct annual operating cost estimates were developed on a component basis, using current cost data from the actual installation and operation of similar facilities and using vendor quotes for major equipment items. Capital cost estimates are expected to have an average accuracy of ±30 percent. This level of accuracy can only be verified by actual equipment installation. Experience in using the cost estimating procedures for units which actually have been constructed and operated indicate that this level of accuracy should be achievable if the unit installed is exactly as described in determining the cost estimate. Any design changes could cause the actual installed capital cost to fall outside the range.

Table 1.5-2 lists the components estimated in determining the installed fixed capital cost of pollution control equipment. For simple equipment, all components may not be present. For large and complex equipment, estimating the cost of each component may be a major effort. A description of the major equipment included in each capital cost estimate is provided in Section 5 of this document.

Table 1.5-3 shows the components comprising direct annual operating costs. Operating supplies include such items as baghouse bags. Maintenance includes the cost of parts used, but the needed inventory of replacement parts is included in fixed capital cost. The cost of water consumed is not included due to uncertainties in estimating the value of water. Direct annual operating costs do not include by-product credits; however, by-product credits are included in total annual operating costs. The operating costs (direct, indirect and total) for each pollution control, along with a detailed discussion of how the costs were determined, are presented on a component basis in Section 6.

TABLE 1.5-2. COMPONENTS OF FIXED CAPITAL COST ESTIMATES

Components
Major Equipment (vendor quotes)
Site Preparation, Excavation and Foundations
Concrete and Rebar
Support Structures
Piping, Ductwork, Joints, Valves, Dampers, etc.
Duct and Pipe Insulation
Pumps and Blowers
Electrical
Instrumentation and Controls
Monitoring Equipment
Erection and Commissioning
Painting
Buildings
Engineering and Other Indirect Costs
Contractor's Fee
Contingency Allowances

Source: DRI.

TABLE 1.5-3. COMPONENTS OF DIRECT ANNUAL OPERATING COST ESTIMATES

Components
Maintenance and Maintenance Supplies
Operating Supplies
Operating Labor
Cooling Water
Steam
Electricity
Fuel
Indirect Costs (e.g., supervision, laboratory, etc.)*

* Indirect costs are included in the labor rate.

Source: DRI.

Table 1.5-4 presents the major economic assumptions used in the cost evaluations. Most economic assumptions have been standardized so that the results found in all of the oil shale PCTMs may be compared. A sensitivity analysis was performed (see Section 6 "Pollution Control Costs") to determine the effects of changes in some of the standard economic assumptions. These changes include delayed start-up, changing capital and operating costs, financing considerations and others. All of the oil shale PCTMs use a discounted cash flow approach (DCF) and constant dollars (mid-1980).

1.6 UNIQUE FEATURES

Three oil shale retorting processes were selected for the oil shale PCTMs to allow consideration of different types of retorting processes, mining and disposal techniques, and pollution control technologies. Some features are found in more than one manual, but each process examined has important unique features which make the analysis worthwhile. These features are listed in Table 1.6-1.

Table 1.6-2 lists the pollution control technologies examined in the three PCTMs. The table is designed to assist the reader in locating detailed information on any specific control technology.

TABLE 1.5-4. SUMMARY OF MAJOR STANDARD ECONOMIC ASSUMPTIONS USED IN CONTROL COST EVALUATIONS

Assumptions[a]
• Approach: Discounted Cash Flow Evaluation (DCF)
• Method: Revenue Requirement determined from capital charge plus operating cost[b]
• Required DCF ROR: 12% (100% equity basis)
• Cost Base: Mid-1980 constant dollars
• Income Tax: In accordance with current regulations (48% combined tax rate, 20% investment tax credit); tax credits and allowances can be passed through to a parent company that can benefit from them immediately, without waiting for the project to become profitable
• Project Timing: 7 years start-up, 30 years life
• Normal Plant Output: 117,000 barrels per calendar day (net, after in-plant use)
• Operating Factors[c]: Years 1-7 - up to 80% Years 8-30 - 100%

[a] A more detailed list of assumptions is presented in Section 6, Table 6.2-1.

[b] This method permits accurate costs to be determined separately for each control using the DCF approach, without the need for an estimate of total plant cost.

[c] See Table 1.4-1 for details on production rates.

Source: DRI.

TABLE 1.6-1. MAJOR FEATURES OF THE OIL SHALE PCTMs

Feature	PCTMs		
	TOSCO II	MIS-Lurgi	Lurgi-Open Pit
MINING			
Underground Room-and-Pillar	X		
Underground MIS		X	
Open Pit			X
RETORTING			
Aboveground	X	X	X
Underground		X	
Direct-heated		X	
Indirect-heated	X	X	X
Solid-to-Solid Heat Transfer	X	X	X
Gas-to-Solid Heat Transfer		X	
Resource Recovery from Processed Shale		X	X
High Carbon Processed Shale	X		
Low Carbon Processed Shale		X	X
Raw Shale Preheating	X		
PROCESSING			
High Btu Off-gas	X	X	X
Low Btu Off-gas		X	
Oil Fractionation	X	X	X

(Continued)

TABLE 1.6-1 (cont.)

Feature	PCTMs		
	TOSCO II	MIS-Lurgi	Lurgi-Open Pit
PROCESSING (cont.)			
Oil Upgrading	X		
Gas Upgrading (for sale)	X		X
In-Plant Fuel Use	X	X	
Excess Electricity		X	
POLLUTION CONTROL			
Retort Gas Cleanup	X	X	X
Process Water Cleanup	X	X	X
Excess Water Discharge			X
By-product Recovery	X	X	X
WASTE DISPOSAL			
Surface Landfill	X	X	
Permitted Design	X		
Open Pit Backfill			X
Groundwater Contamination Potential (subsurface disposal or retort abandonment)		X	X
Surface Water Contamination Potential (valley fill)	X	X	

Source: DRI.

TABLE 1.6-2. POLLUTION CONTROL TECHNOLOGIES EXAMINED IN THE OIL SHALE PCTMs

Control Technology	PCTMs		
	TOSCO II	MIS-Lurgi	Lurgi-Open Pit
AIR POLLUTION			
Diethanolamine (DEA)	X		
Methyldiethanolamine (MDEA)	X		
Claus	X		
Wellman-Lord	X		
Stretford	X	X	X
Shell Claus Off-gas Treating (SCOT)	X		
Limestone Scrubber (FGD)		X	
Absorber/Cooler		X	
Low Flare	X		
High Energy Venturi Wet Scrubber	X		
Venturi Wet Scrubber	X	X	
Electrostatic Precipitator		X	X
Thermal Oxidizer	X		
Fabric Filter (baghouse)	X	X	X
Foam Sprays	X	X	X
Water Sprays	X	X	X
Double Seal Oil Storage	X	X	X
Refrigerated Ammonia Storage	X	X	X
Catalytic Converter	X	X	X
Maintenance	X	X	X

(Continued)

TABLE 1.6-2 (cont.)

Control Technology	PCTMs		
	TOSCO II	MIS-Lurgi	Lurgi-Open Pit
WATER MANAGEMENT			
Ammonia Recovery	X	X	X
Biological Oxidation	X		
Steam Stripper	X	X	
Kettle Evaporator		X	
Reverse Osmosis	X	X	X
Carbon Adsorption	X	X	X
Wet Air Oxidation	X	X	
Vapor Compression Evaporation	X		
Reinjection			X
Multimedia Gravity Filtration		X	
Clarifier	X	X	X
Process Oil/Water Separator	X	X	X
Runoff Oil/Water Separator	X	X	X
Boiler Feedwater Treatment	X	X	X
Cooling Tower Makeup Treatment	X	X	X
Equalization Pond	X	X	X
Aerated Pond			X
Solar Pond	X	X	X

(Continued)

TABLE 1.6-2 (cont.)

Control Technology	PCTMs		
	TOSCO II	MIS-Lurgi	Lurgi-Open Pit
SOLID WASTE MANAGEMENT			
Runoff Collection System	X	X	X
Upper Embankments	X		
Lower Embankments	X	X	
Runon Collection System	X	X	
Stilling Basin	X		
Water Impoundment	X		
Leachate Collection System	X	X	
Spring Collection/Underdrains	X	X	
Covers and Bottom Liners	X	X	X
MIS Spent Retort Treatment		X	
Dust Supression	X	X	X
Surface Reclamation	X	X	X
Piezometers			X

Source: DRI.

1.7 ORGANIZATION AND USE OF THE MANUAL

Following this "Introduction" to the PCTM are six major sections which present material ranging from basic background information to detailed pollution control data and costs. In addition, a complete listing of all information sources used to develop the manual is provided in Section 8 "References." A brief description of each of the major sections is presented below.

Section 2 provides an overview of the MIS and Lurgi retorting processes and the case studies examined in the manual. It gives background information on the proposed project development, including the site involved, retorting

and mining processes, and the pollution controls proposed by the developers of Tract C-b.

Section 3 expands upon the case studies outlined in Section 2. Detailed process flow diagrams and descriptions are given for each unit process. Individual streams, their mass flow rates, and other characteristics are generated during the unit process analyses, and this information is the basis for detailed stream discussions presented in Section 4.

Section 4 provides the detailed compositions for the major process streams identified in Section 3. These parameters are then used in designing and costing the pollution control technologies discussed in Section 5. All streams identified in Section 3 are inventoried by media (gas, liquid, solid) and important features of each stream are noted (Tables 4.1-1, 4.1-3 and 4.1-5, respectively). Also, the detailed stream compositions are summarized by media (Table 4.1-2, 4.1-4 and 4.1-6).

Section 5 presents concise inventories of the available control technologies and approaches for air, water and solid wastes. Key features of each technology are briefly described and many leading technologies are analyzed in greater depth. The fixed capital and direct annual operating costs and design details for the leading technologies are also presented.

Section 6 presents the total annual and per-barrel cost of pollution control based upon the cost data developed for the control technologies in Section 5 and the standard economic assumptions used in all oil shale PCTMs. This section also analyzes the sensitivity of the control costs to variations in the standard economic assumptions and capital and operating cost parameters.

Section 7 discusses the limitations of the data base used in the preparation of the manual. It also identifies important areas that may require more research.

Table 1.7-1 provides a composite list of the major process and waste streams generated by the facility described in Section 3. All streams are identified with a unique name and number. An asterisk (*) is placed next to the stream number if the stream comes into contact with the environment at any point in the process, and a descriptive letter is given to identify the state of the stream, i.e., gaseous (G), liquid (L) or solid (S). Also, cross-references are included for the flow diagrams in which the stream is produced and/or processed (Section 3), detailed composition tables (Section 4), and applicable control technologies (Section 5) to allow tracking of the stream from its origin to its final disposition.

For example, stream 38 in Table 1.7-1 is the MIS retort vapor--a gaseous stream that comes in contact with the environment. It is produced by in situ processing of the rubblized oil shale (stream 35), as illustrated in Figure 3.3-7, Section 3. Table 4.2-15 (Section 4) provides the detailed composition of the vapor. Figure 3.3-7 indicates that Figure 3.3-8 is the destination for the vapor.

TABLE 1.7-1. COMPOSITE LIST OF STREAMS

Stream Number	Description of Stream	Type of Stream	Cross-References: Flow Diagram Numbers	Cross-References: Composition Table Numbers	Cross-References: Control Technology Sections
1*	Raw Shale to Lurgi Retorts	S	3.3-3, 3.3-4	4.2-4	--
2*	Baghouse Dusts	S	3.3-3, 3.3-4	4.2-4	--
3*	Mine Air	G	3.3-3	--	--
4*	Mine Vent Emission	G	3.3-3	--	--
5*	Diesel Emissions - Mining Equipment	G	3.3-3	--	5.1.4, 5.1.5
6*	Fugitive Dust Emissions - Mining Activities	G	3.3-3	--	5.1.1
7*	Production Shaft Conveyor Transfer Point, Baghouse Emission	G	3.3-3	--	5.1.1
8*	Raw Shale Storage Load-in, Baghouse Emission	G	3.3-3	--	5.1.1
9*	Crushing and Screening, Baghouse Emission	G	3.3-3	--	5.1.1
10*	Fine Ore Conveyor Transfer Point, Baghouse Emission	G	3.3-3	--	5.1.1
11*	Fine Ore Storage Load-in, Baghouse Emission	G	3.3-3	--	5.1.1
12*	Mine Water	L	3.3-3, 3.3-13, 3.3-14	--	5.2.1
13*	Raw Shale Leachate	L	3.3-3, 3.3-13, 3.3-14	4.2-5	5.2.1
14*	Fine Ore Storage Load-out, Baghouse Emission	G	3.3-4	--	5.1.1
15*	Lurgi Flue Gas	G	3.3-4	4.2-31, 4.2-32	5.1.1
16	Lurgi Retort Vapors	G	3.3-4, 3.3-5	4.2-17	--
17*	Lurgi Processed Shale	S	3.3-4, 3.3-15	4.2-7, 4.2-8, 4.2-9	5.3.1, 5.3.2, 5.3.3, 5.3.4
18*	Venturi Emission from Processed Shale Moisturizer	G	3.3-4	--	5.1.1
19*	Steam from Lurgi Waste Heat Boiler	G	3.3-4, 3.3-11	4.2-37, 4.2-40	--
20*	Blowdown from Waste Heat Boiler	L	3.3-4, 3.3-11	4.2-37, 4.2-40, 4.2-44, 4.2-45	5.2.1, 5.2.3
21	Combustion Air to Lurgi Lift Pipes	G	3.3-4	--	--
22	Lurgi Raw Retort Gas	G	3.3-5	4.2-18	--
23	Lurgi Retort Gas	G	3.3-5, 3.3-6	4.2-19	5.1.3
24	Lurgi Light Oils to Storage	L	3.3-5	4.2-14	--

(Continued)

TABLE 1.7-1 (cont.)

Stream Number	Description of Stream	Type of Stream	Cross-References: Flow Diagram Numbers	Cross-References: Composition Table Numbers	Cross-References: Control Technology Sections
25	Light Oil Makeup to Naphtha Recovery	L	3.3-5, 3.3-6	--	--
26	Lurgi Middle Oils to Storage	L	3.3-5	4.2-14	--
27	Lurgi Heavy Oils to Storage	L	3.3-5	4.2-14	--
28*	HC Emissions from Oil Storage Tanks	G	3.3-5	--	5.1.4
29	Lurgi Gas Liquor	L	3.3-5, 3.3-10	4.2-34, 4.2-35, 4.2-38	5.2.1, 5.2.2, 5.2.3
30	Processed Shale Dust from Lurgi Heavy Oil Dedusting	S	3.3-4, 3.3-5	--	--
31	Naphtha-Free Lurgi Retort Gas	G	3.3-6, 3.3-9, 3.3-11	4.2-20, 4.2-21	5.1.2, 5.1.3
32	Naphtha-Free Lurgi Gas to Lift Pipes	G	3.3-4, 3.3-6	--	--
33	Lurgi Naphtha Product to Storage	L	3.3-6	4.2-22	--
34*	HC Emission from Naphtha Storage Tank	G	3.3-6	--	5.1.4
35*	Rubblized Shale in MIS Retorts	S	3.3-7	4.2-3	5.3.2
36*	MIS Processed Shale (in-place)	S	3.3-7	4.2-6	5.3.1, 5.3.3
37*	Combustion Air to MIS Retorts	G	3.3-7	--	--
38*	MIS Retort Vapor	G	3.3-7, 3.3-8	4.2-15	--
39*	MIS Heavy Oils to Storage	L	3.3-7	4.2-13	--
40*	HC Emission from MIS Heavy Oil Storage Tank	G	3.3-7	--	5.1.4
41*	MIS Retort Water	L	3.3-7	4.2-10, 4.2-11, 4.2-41, 4.2-42, 4.2-43	5.2.1, 5.2.2, 5.2.3
42	Stripped MIS Retort Water	L	3.3-7, 3.3-11	4.2-43, 4.2-44, 4.2-45	5.2.3
43	Retort Water Steam Stripper Overhead	G	3.3-7, 3.3-10	4.2-35, 4.2-38, 4.2-43	5.2.2
44	Diesel Fuel	L	3.3-3, 3.3-5, 3.3-15	--	--
45	Compressed MIS Retort Gas	G	3.3-8, 3.3-9, 3.3-11	4.2-16	5.1.2, 5.1.3
46	MIS Light Oils to Storage	L	3.3-8	--	--
47*	HC Emission from MIS Light Oil Storage Tank	G	3.3-8	--	5.1.4
48	MIS Gas Condensate	L	3.3-8, 3.3-10	4.2-33, 4.2-35, 4.2-38	5.2.1, 5.2.2, 5.2.3
49*	Cooling Water Evaporation from Humidified Air Coolers	G	3.3-8	--	--

(Continued)

TABLE 1.7-1 (cont.)

Stream Number	Description of Stream	Type of Stream	Cross-References: Flow Diagram Numbers	Cross-References: Composition Table Numbers	Cross-References: Control Technology Sections
50	Stretford Precooler Condensate (Case Study B)	L	3.3-9, 3.3-10	4.2-26, 4.2-38	5.1.2, 5.1.3
51	Stretford Treated Lurgi Retort Gas (Case Study B)	G	3.3-9, 3.3-11	4.2-25	5.1.2
52	Stretford Treated MIS Retort Gas (Case Study B)	G	3.3-9, 3.3-11	4.2-24	5.1.2
53	Stretford Oxidizer Vent Gas (Case Study B)	G	3.3-9, 3.3-11	4.2-26	--
54	Stripping Air to Stretford Oxidizer (Case Study B)	G	3.3-9	4.2-26	--
55	Liquid Sulfur to Storage (Case Study B)	L	3.3-9	4.2-26	--
56	Stretford Chemicals (Case Study B)	L	3.3-9	--	--
57*	Stretford Spent Liquor to Reclaim (Case Study B)	L	3.3-9	--	--
58*	Cooling Water Evaporation from Humidified Air Coolers (Case Study B)	G	3.3-9	--	--
59	Phosphoric Acid	L	3.3-10	--	--
60	Caustic (NaOH)	S	3.3-10	--	--
61*	Phosam-W Overhead Vapors	G	3.3-10, 3.3-11	4.2-36, 4.2-39	5.1.2, 5.2.2
62	Anhydrous Ammonia to Storage	L	3.3-10	4.2-36, 4.2-39	5.1.3
63	Phosam Stripped Condensate to Lurgi Waste Heat Boiler	L	3.3-4, 3.3-10	4.2-36, 4.2-37, 4.2-39, 4.2-40	5.2.3
64	Phosam Stripped Condensate to MIS Absorber/Cooler Recycle	L	3.3-8, 3.3-10	4.2-35, 4.2-36, 4.2-38, 4.2-39	5.1.3
65	Phosam Stripped Condensate to Kettle Evaporators (Case Study A)	L	3.3-10, 3.3-11	4.2-36, 4.2-44	5.2.3
66	Phosam Stripped Condensate to Kettle Evaporators (Case Study B)	L	3.3-10, 3.3-11	4.2-39, 4.2-45	5.2.3
67	Flue Gas before FGD - Steam Boilers (Case Study A)	G	3.3-11, 3.3-12	4.2-28, 4.2-29	5.1.2
68*	Flue Gas - Steam Boilers (Case Study B)	G	3.3-11	4.2-30	5.1.2
69	High Pressure Steam from Steam Boilers	G	3.3-11	--	--

(Continued)

TABLE 1.7-1 (cont.)

Stream Number	Description of Stream	Type of Stream	Cross-References: Flow Diagram Numbers	Cross-References: Composition Table Numbers	Cross-References: Control Technology Sections
70*	Low-Quality Steam to MIS Retorts	G	3.3-7, 3.3-11	4.2-44, 4.2-45	--
71	Steam to FGD (Case Study A)	G	3.3-11, 3.3-12	--	--
72	Steam to Naphtha Recovery	G	3.3-6, 3.3-11	--	--
73	Steam to MIS Retort Water Steam Stripper	G	3.3-7, 3.3-11	--	--
74	Steam to Stretford Sulfur Melting Unit (Case Study B)	G	3.3-9, 3.3-11	--	--
75	Steam to Phosam-W Ammonia Recovery Unit	G	3.3-10, 3.3-11	--	--
76*	Concentrate from Kettle Evaporators (Case Study A)	L	3.3-4, 3.3-11	4.2-44	5.2.1, 5.2.3
77*	Concentrate from Kettle Evaporators (Case Study B)	L	3.3-4, 3.3-11	4.2-45	5.2.1, 5.2.3
78*	Blowdown from Steam Boilers	L	3.3-11, 3.3-13, 3.3-14	--	5.2.1, 5.2.3
79*	Flue Gas after FGD (Case Study A)	G	3.3-12	4.2-28, 4.2-29	5.1.2
80*	Lime Sludge from FGD (Case Study A)	L	3.3-4, 3.3-12	--	5.3.1
81	Limestone to FGD (Case Study A)	S	3.3-12	--	--
82*	Water for Dust Palliatives	L	3.3-3, 3.3-13, 3.3-14	--	5.2.1
83	Cooling Water to Lurgi-Ruhrgas Oil Recovery	L	3.3-5, 3.3-13, 3.3-14	--	5.2.1, 5.2.3
84	Cooling Water to Naphtha Recovery	L	3.3-6, 3.3-13, 3.3-14	--	5.2.1, 5.2.3
85	Cooling Water to MIS Retort Water Steam Stripping	L	3.3-7, 3.3-13, 3.3-14	--	5.2.1, 5.2.3
86	Cooling Water to Phosam-W Unit	L	3.3-10, 3.3-13, 3.3-14	--	5.2.1, 5.2.3
87*	Cooling Tower Evaporation (Case Study A)	G	3.3-13	--	5.2.3
88*	Cooling Tower Drift (Case Study A)	L	3.3-13	--	5.2.3
89	Cooling Water Makeup to MIS Humidified Air Coolers (Case Study A)	L	3.3-8, 3.3-13	--	5.2.3
90*	Blowdown from MIS Humidified Air Coolers (Case Study A)	L	3.3-8, 3.3-13	--	5.2.1, 5.2.3

(Continued)

TABLE 1.7-1 (cont.)

Stream Number	Description of Stream	Type of Stream	Cross-References: Flow Diagram Numbers	Cross-References: Composition Table Numbers	Cross-References: Control Technology Sections
91*	Blowdown from Cooling Tower (Case Study A)	L	3.3-12, 3.3-13	--	5.2.1, 5.2.3
92	Treated Boiler Feedwater	L	3.3-11, 3.3-13, 3.3-14	--	5.2.3
93*	Lurgi Processed Shale Moistening Water	L	3.3-4, 3.3-13, 3.3-14	--	5.2.1, 5.3.3, 5.3.4
94*	Lurgi Processed Shale Moistening Water (Case Study A)	L	3.3-4, 3.3-13	--	5.2.1, 5.3.3, 5.3.4
95*	Processed Shale Dust Control Water	L	3.3-13, 3.3-14, 3.3-15	--	5.2.1, 5.3.4
96*	Water Evaporation from Equalization Basin (Case Study A)	G	3.3-13	--	5.2.1
97*	Water for Revegetation	L	3.3-13, 3.3-14, 3.3-15	--	5.2.1, 5.3.4
98*	Treated Sanitary Water	L	3.3-13, 3.3-14, 3.3-15	--	5.2.1
99*	Sanitary Water Treatment Sludge	L	3.3-13, 3.3-14, 3.3-15	--	5.3.4
100	Steam Condensate from Naphtha Recovery	L	3.3-6, 3.3-13, 3.3-14	--	--
101	Steam Condensate from Phosam-W Unit	L	3.3-10, 3.3-13, 3.3-14	--	--
102	Steam Condensate from Kettle Evaporators	L	3.3-11, 3.3-13, 3.3-14	--	--
103	Steam Condensate from MIS Retort Water Steam Stripper	L	3.3-7, 3.3-13, 3.3-14	--	--
104	Steam Condensate from FGD	L	3.3-12, 3.3-13	--	--
105	Cooling Water Makeup to MIS Cooler (Case Study B)	L	3.3-8, 3.3-14	--	5.2.1, 5.2.3
106*	Blowdown from MIS Humidified Air Coolers (Case Study B)	L	3.3-8, 3.3-14	--	5.2.1, 5.2.3
107*	Lurgi Processed Shale Moistening Water (Case Study B)	L	3.3-4, 3.3-14	--	5.2.1, 5.3.3, 5.3.4
108	Cooling Water Makeup to Stretford Process (Case Study B)	L	3.3-9, 3.3-14	--	5.2.1, 5.2.3
109*	Blowdown from Stretford Humidified Air Coolers (Case Study B)	L	3.3-9, 3.3-14	--	5.2.1, 5.2.3

(Continued)

TABLE 1.7-1 (cont.)

Stream Number	Description of Stream	Type of Stream	Cross-References: Flow Diagram Numbers	Cross-References: Composition Table Numbers	Cross-References: Control Technology Sections
110	Process Water Makeup to Stretford Process (Case Study B)	L	3.3-9, 3.3-14	--	5.2.1, 5.2.3
111	Steam Condensate from Stretford Process (Case Study B)	L	3.3-9, 3.3-14	--	--
112*	Water Evaporation from Equalization Basin (Case Study B)	G	3.3-14	--	5.2.1
113*	Cooling Tower Evaporation (Case Study B)	G	3.3-14	--	5.2.3
114*	Cooling Tower Drift (Case Study B)	L	3.3-14	--	5.2.3
115*	Potable/Sanitary Water	L	3.3-13, 3.3-14	--	5.2.1
116*	Service and Fire Water	L	3.3-13, 3.3-14	--	5.2.1
117*	HC Emissions, Miscellaneous	G	--	--	5.1.4
118*	Storm Runoff	L	3.3-13, 3.3-14, 3.3-15	--	5.2.1, 5.3.2
119*	Diesel Emissions - Disposal Equipment	G	3.3-15	--	5.1.4, 5.1.5
120*	Fugitive Dust Emissions - Processed Shale Conveyor Transfer Points	G	3.3-15	--	5.1.1
121*	Dust Emissions - Processed Shale Pile	G	3.3-15	--	5.1.1, 5.3.4
122*	Processed Shale Leachate	L	3.3-13, 3.3-14, 3.3-15	4.2-12	5.2.1, 5.3.3

* Indicates streams that come into contact with the environment.

Source: DRI.

Figure 3.3-8 exemplifies water scrubbing and compression of the vapor to produce the compressed MIS retort gas (stream 45) for which the detailed composition is given in Table 4.2-16. The compressed gas can be followed sequentially through Figures 3.3-11 (stream 67) and 3.3-12 (stream 79) to illustrate the combustion of the gas in steam boilers and desulfurization of the flue gas before it is released into the atmosphere. Tables 4.2-28 and 4.2-29 give the composition of the desulfurized flue gas. Other process and waste streams can be followed in a similar manner.

SECTION 2

SUMMARY OF STUDY FEATURES

The Federal Prototype Oil Shale Leasing Program was initiated by the U.S. Department of Interior (DOI) in 1974. The purpose of the program was to encourage commercial development of the energy resource in the Green River Oil Shale Formation. Six lease tracts, two each in the states of Colorado, Utah and Wyoming, were created and offered to the public on the basis of high bid. One of the tracts, Federal Lease Tract C-b in Colorado, was subsequently awarded to a consortium of Ashland Oil, Inc., Atlantic Richfield Company, The Oil Shale Corporation and Shell Oil Company. In early 1975, The Oil Shale Corporation and Atlantic Richfield withdrew from the joint venture, followed by the withdrawal of Shell Oil in late 1976. At that time, Occidental Oil Shale, Inc. joined with the remaining original participant, Ashland Oil, to proceed with the development of Tract C-b. However, Ashland Oil withdrew from the project in February 1979, and Occidental Oil Shale remained as the only participant until September 1979, when Tenneco Shale Oil Company entered the project. The two partners formed the Cathedral Bluffs Shale Oil Company to pursue the development of Tract C-b, with Occidental Oil Shale as the project operator. According to a recent reorganization announcement (spring of 1982), Occidental Petroleum Corporation (the parent company of Occidental Oil Shale, Inc.) has entered the partnership with Tenneco, with the latter now serving as the operator of the project.

In accordance with the terms and conditions of the lease, a Detailed Development Plan (DDP) for the tract was submitted to the U.S. Department of Interior's Area Oil Shale Office (now part of the Minerals Management Service) in 1976 (Ashland Oil, Inc. and Shell Oil Co., February 1976). The DDP was based on using the TOSCO II retorting technology with underground room-and-pillar mining. However, after Occidental Oil Shale joined the project, a modified DDP based on Occidental's patented Modified In Situ (MIS) retorting technology, but without any aboveground retorting, was submitted to DOI (Ashland Oil, Inc. and Occidental Oil Shale, Inc., February 1977). Following this, a Prevention of Significant Deterioration (PSD) permit application covering the preliminary phase of the project was submitted to the EPA, Region VIII (Ashland Oil, Inc. and Occidental Oil Shale, Inc., October 1977). In December 1977, the EPA granted a conditional permit for site preparation, shaft sinking, and retorting of six MIS retorts (U.S. EPA, December 15, 1977). Later, the tract developers applied for another PSD permit, this time for a full-scale operation based on the combination of MIS retorting and Lurgi-Ruhrgas aboveground retorting (Occidental Oil Shale, Inc. and Tenneco Shale Oil Co., April 1981). However, the project has been delayed indefinitely by the current partners. Until development plans are

revised, the information in the PSD permit application remains the most current information available.

2.1 PROCESS OVERVIEW

The tract development plans presented in this manual are based on the plans that have been proposed by the developers (i.e., the plans upon which the DDP, modified DDP, PSD permit applications and permits, etc., have been issued). These various documents in themselves indicate how the developers' plans have changed, and further changes may be made based upon additional research or actual commercial development.

Two retorting technologies--the MIS and Lurgi-Ruhrgas processes--have been analyzed in this manual; as noted above, this combination is in accordance with the latest PSD permit application (Occidental Oil Shale, Inc. and Tenneco Shale Oil Co., April 1981). Approximately 69,000 BPSD of crude shale oil from the MIS process and 48,000 BPSD from the Lurgi-Ruhrgas process have been projected to be produced during the full-scale retorting operation.

The plans do not involve any mining for the purpose of retorting, but some oil shale is removed underground to provide the needed void space in the MIS retorts and to create passageways for access to the retorts. This shale is brought to the surface and retorted by the Lurgi-Ruhrgas process.

Occidental has gained considerable experience with MIS retorting of oil shale. Several large-sized MIS retorts (Rooms 4, 5, 6, 7 and 8) have been processed by Occidental at a privately owned oil shale site in Logan Wash, Colorado. The retort preparation and retorting techniques to be adopted at Tract C-b will be similar to those used for the large retorts at Logan Wash.

The full-scale retort dimensions are estimated to be 165 feet by 165 feet by 290 feet high. The retorts will be prepared in clusters of 6, with 16 such clusters per panel, or a total of 96 retorts per panel. At a retorting efficiency of 60% of Fischer assay from the 26.7 gpt shale, 96 retorts will produce 69,000 BPSD of crude shale oil for a period of seven months. Several panels of retorts will be continuously prepared and processed throughout the project duration of 30 years.

The MIS retorts will be strategically placed in the oil shale zone so that a richer oil shale (32.7 gpt) is mined out from the passageways and rooms. This mined shale will be crushed to approximately 1/4-inch size and then retorted with the Lurgi-Ruhrgas process. This retorting process has been applied to Colorado oil shales on a pilot scale and is capable of yielding 100% of Fischer assay oil. A full-sized Lurgi retort is designed to handle 8,818 TPSD of oil shale on a 24-hr/day basis. Eight such units, of which seven will be in operation at all times, will be used to process a total of 61,728 TPSD of oil shale. An additional 48,000 BPSD of crude oil will be produced by this aboveground retorting process, for a total of 117,000 BPSD of oil from the plant. Oil upgrading is not planned.

Two case studies for the retort gas treatment are examined in this manual. The first case is based on the recent PSD permit application

(April 1981) and involves flue gas desulfurization (FGD) after the retort gas has been consumed during steam and power generation. The second case involves the use of the Stretford process to remove hydrogen sulfide from the retort gas before it is burned. This case is in accordance with the earlier PSD permit application (October 1977) in which the Stretford process was proposed for the retort gas treatment.

Anhydrous ammonia will be recovered from the gas condensate and retort water. The treated waters will then be used in steam generation and processed shale moisturizing.

After an analysis of disposal sites for the processing wastes, the developers proposed Sorghum Gulch as the best choice for containing the wastes (Ashland Oil, Inc. and Shell Oil Co., February 1976; Occidental Oil Shale, Inc. and Tenneco Shale Oil Co., April 1981). To date, the developers have not applied for a disposal permit from the Colorado Mined Land Reclamation Board (CMLRB).

There is a potential for generating excess electricity because the MIS off-gas quantity is above that required for the process energy needs. Due to its low heating value, the off-gas has no commercial potential; hence, power generation on site may be a viable route. A steam power cogeneration system is proposed (Occidental Oil Shale, Inc. and Tenneco Shale Oil Co., April 1981).

The quantities defining the dimensions of the plant complex are listed in Table 2.1-1. Process related quantities have been estimated primarily from the data published by the tract developers (Ashland Oil, Inc. and Shell Oil Co., February 1976; Ashland Oil, Inc. and Occidental Oil Shale, Inc., February 1977; Occidental Oil Shale, Inc. and Tenneco Shale Oil Co., April 1981). These quantities form the basis for the technical analyses and discussions presented in this document.

Normally, all five of the MIS processing trains will be operating; however, the MIS processing equipment is built 25% oversize so that during interrupt situations the stream flows can be handled by four out of five trains. Similarly, eight Lurgi processing trains are provided, of which only seven will be operated at any one time. As a result, equipment downtime is not expected to affect the production schedule and the on-stream factor would be practically 100% (or 365 days/year).

Due to the complexities involved in bringing the MIS as well as Lurgi processing trains on line, a seven-year start-up period is estimated before full-scale production will be reached. This start-up schedule for both processing trains is presented in Table 2.1-2.

2.1.1 Site Description

Tract C-b is located in the southeastern portion of the Piceance Creek Basin in Rio Blanco County of northwestern Colorado, as illustrated in Figure 2.1-1. The towns nearest to the tract are Meeker (40 miles), Rifle (40 miles) and Rangely (65 miles). A map of the tract in relation to

TABLE 2.1-1. MAJOR PARAMETERS DEFINING THE SIZE OF THE COMMERCIAL PLANT COMPLEX

Parameter, Unit	MIS	Lurgi	Combined
Net Oil Produced, BPSD	69,000	48,000	117,000
Oil Pour Point, °F	60	N.D.*	N.D.
Retort Gas Produced, 10^3lb/hr	10,998	162	11,160
Retort Gas Heating Value, Btu/lb (Btu/SCF)	880 (66)	9,794 (616)	1,036 (78)
Raw Shale Processed, TPSD	180,996	61,728	242,724
Raw Shale Grade, gpt	26.7	32.7	28.2
Retorting Yield, % Fischer Assay	60	100	72
Processed Shale Disposed (dry basis), TPSD	--	46,908	46,908
Retort Water Produced (average), gpm	1,200	--	1,200
Gas Condensate Produced, gpm	3,716	148	4,040
Sulfur Produced, MTPSD	171	9	180
Ammonia Produced, TPSD	332-344	7	339-351
Potential Electricity Generated for Export, MW	N.D.	N.D.	up to 190
Number of Retorts	96	7 + 1 spare	--
Shale Processed/Retort, TPSD	1,885	8,818	--
Project Duration, years	--	--	30
On-stream Factor, %	25% Excess Cap.	7 of 8 retorts	100%
Mining Method	--	--	MIS
Total Land Area, acres	--	--	5,094
Plant Area, acres	--	--	N.D.
Processed Shale Disposal Area, acres	--	N.D.	N.D.
Source Water Consumed, acre-feet/year (bbl/bbl of oil)	--	--	6,940-9,970 (1.25-1.80)

* N.D. = Not determined.

Source: DRI estimates based on data from Occidental Oil Shale, Inc. and Tenneco Shale Oil Co., April 1981.

TABLE 2.1-2. SHALE OIL PRODUCTION SCHEDULE FOR THE START-UP PERIOD

	Year 1	Year 2	Year 3	Year 4	Year 5	Year 6	Year 7	Year 8+
Oil Production (10^6 bbl)								
Modified In Situ Retorting	0.38	3.31	10.00	15.58	20.14	20.14	20.14	25.20
Surface (Lurgi) Retorting	0.44	1.10	1.98	4.41	8.75	12.65	14.10	17.54
TOTAL	0.82	4.41	11.98	19.99	28.89	32.79	34.24	42.74
Total as Proportion of a Full Production Year (%)	2	10	28	47	68	77	80	100

Source: DRI calculations based on data provided by Occidental Oil Shale, Inc.

Piceance Creek and its tributaries is presented in Figure 2.1-2. As the figure illustrates, the tract's upper northeast corner is approximately one-half mile south of Piceance Creek at its confluence with Stewart Gulch. The tract covers approximately 5,094 acres.

Terrain consists primarily of undulating valleys and ridges trending in a northeasterly direction. Major water runoff drains into Piceance Creek, which flows northwesterly approximately 24 miles to its confluence with the White River. The elevation of the tract averages about 6,800 feet. Willow Creek borders the tract on the west and is perennial from the headwater drainage area of East Fork Willow Creek to its mouth near the tract. A major ephemeral tributary to Willow Creek is Scandard Gulch, which passes through the western portion of the tract. The Stewart Gulch drainage system is located along the eastern edge of the tract and also extends south of the tract. Most of the channels generally are dry. Perennial flows are found in the main stem of Stewart Gulch and West Fork Stewart Gulch. Flow in the main stem originates from the seepage area, approximately one mile upstream from the junction with the West Fork. Smaller valleys near the center of the tract and close to the plant site are Sorghum and Cottonwood Gulches, ephemeral tributaries to Piceance Creek. Flow occurs only from snowmelt or local thunderstorms.

Precipitation, relative humidity, vertical temperature profiles, surface wind patterns, and wind speed on the tract are dependent on the local topography. From November 1974 through July 1975, a maximum hourly temperature of 90°F was recorded (in July 1975) both on the tract plateau and in the Piceance Creek valley, which is 600 feet lower in elevation. The minimum temperatures for the plateau and valley were -29°F and -51°F, respectively, occurring in January 1975. The climate in the vicinity of the tract is semi-arid, with snow cover occurring variably from October to May. The higher plateaus in the area generally receive more precipitation than the valleys and low-lying areas. To date, the maximum monthly precipitation recorded on the tract was 1.2 inches in May 1975.

The surface wind patterns are greatly influenced by the irregular terrain, which contributes to both mechanically induced and thermally induced turbulence. Hourly average wind speeds range from 3 to 10 mph and are generally higher on the tract plateau. Wind direction on the tract plateau is determined by synoptic winds and is predominantly from the south and southeast. The valley winds are typically channeled up the valleys in a southeasterly direction or down the valleys in a northwesterly direction.

Piceance Creek has an average annual flow of 14,500 acre-feet, and 80% is believed to be from groundwater discharge. Chemical analyses of water samples collected from water quality locations indicate that surface water in the lower reaches of Piceance Creek can be classified as a mixed bicarbonate type. Total dissolved solids (TDS) measure approximately 700 mg/l just upstream of the tract and increase to about 950 mg/l downstream. The TDS eventually measure approximately 2,000 mg/l at the mouth of Piceance Creek.

Two rock formations make up the major strata underlying the area in and around Tract C-b, specifically the Uinta and Green River Formations. The

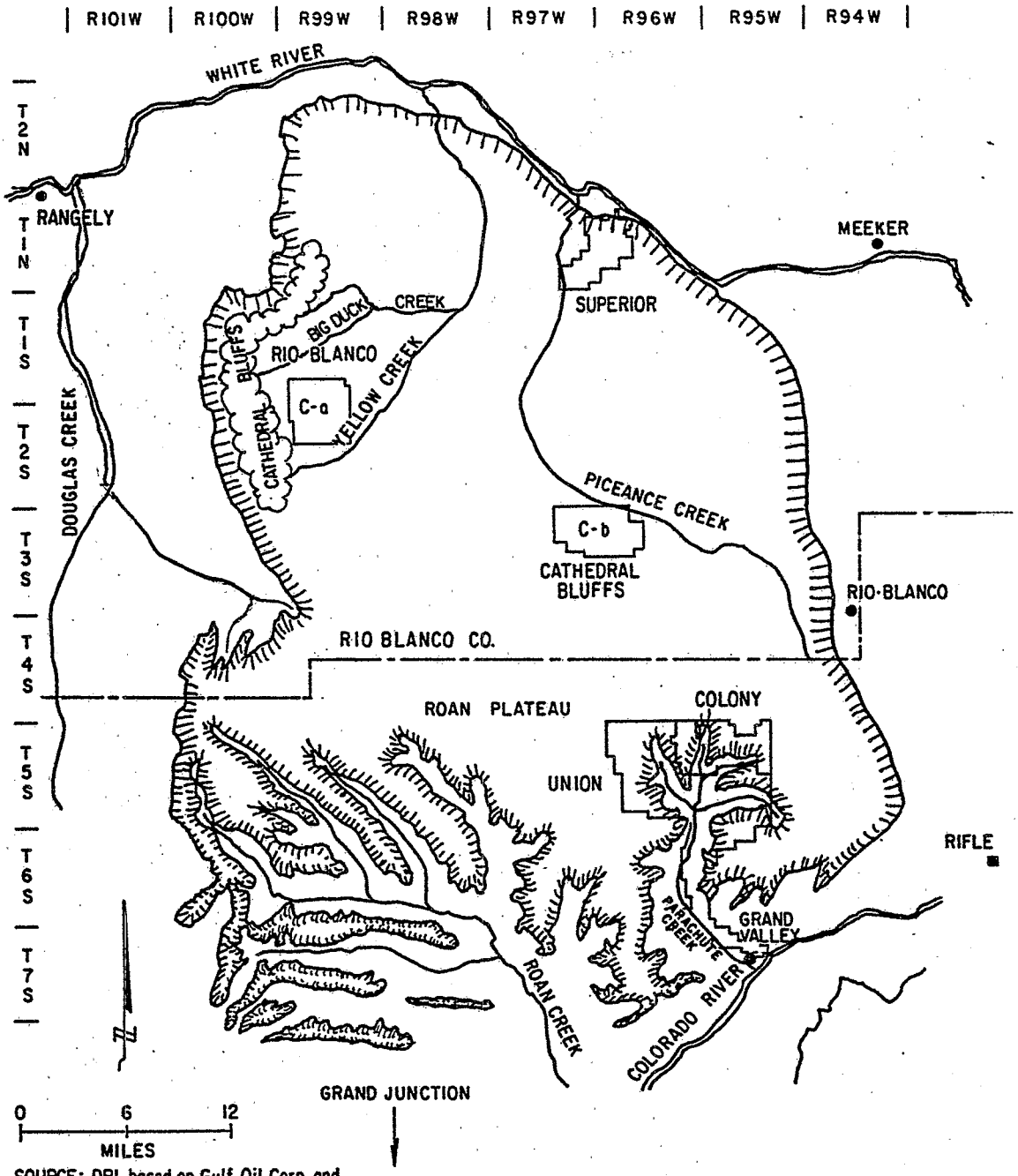

SOURCE: DRI based on Gulf Oil Corp. and Standard Oil Co. (Indiana), March 1976

FIGURE 2.1-1 LOCATION OF TRACT C-b IN PICEANCE CREEK BASIN

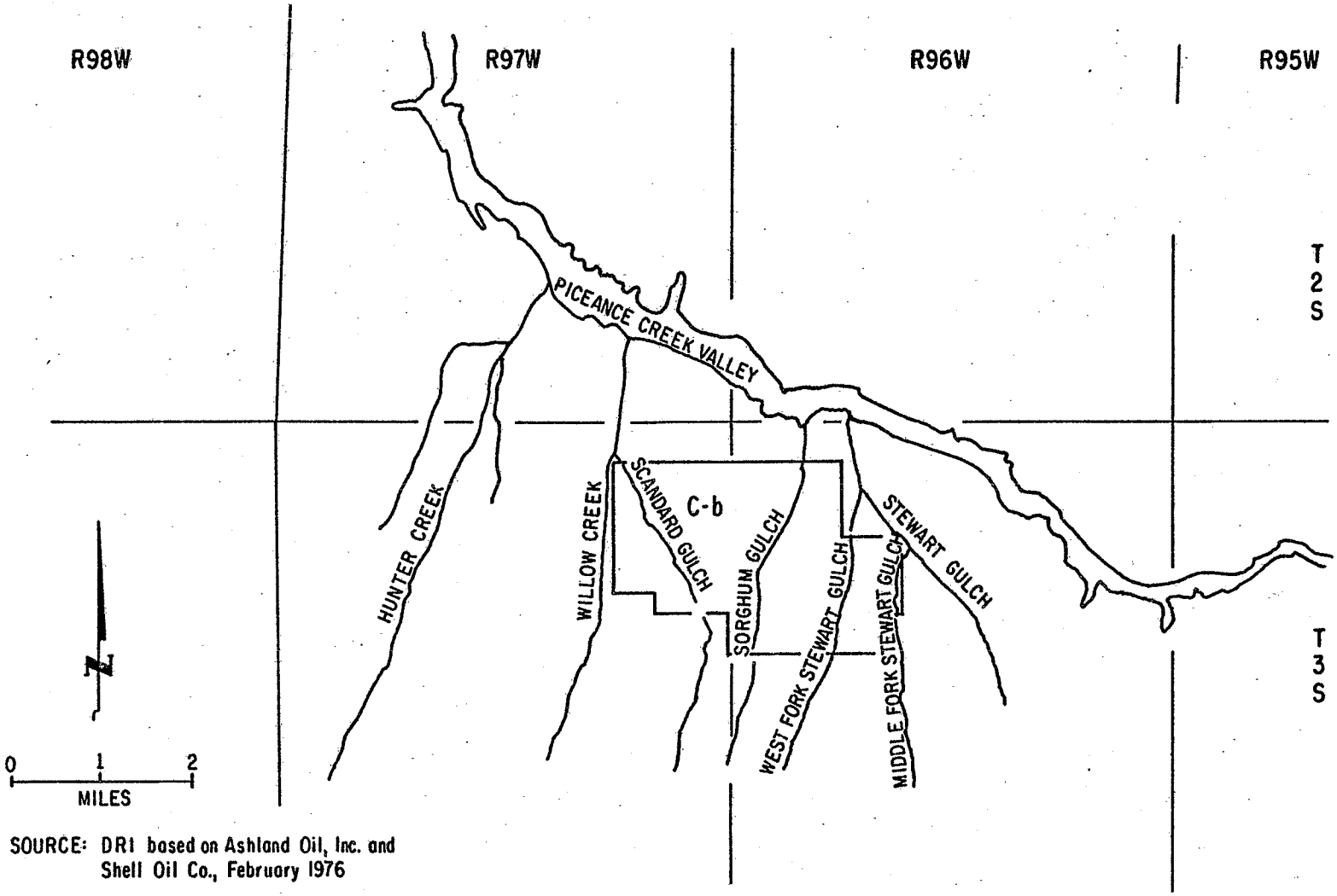

SOURCE: DRI based on Ashland Oil, Inc. and Shell Oil Co., February 1976

FIGURE 2.1-2 TRACT C-b SITE MAP

regional stratigraphy of these formations is shown in Figure 2.1-3. The Uinta Formation is the bedrock over the entire tract. This unit consists mostly of interbedded sandstone, siltstone and marlstone, ranging from approximately 400 to 900 feet thick across the tract. Stream alluvium is present in narrow bands along the main drainages overlying the Uinta Formation. The thickness of this alluvial layer is generally less than 100 feet. Water in the upper aquifer, between the Uinta Formation and the Mahogany zone, can be classified as a sodium bicarbonate type. It generally contains moderate concentrations of sulfate and low concentrations of chloride and fluoride. The Parachute Creek member of the Green River Formation contains the Mahogany zone, which separates the upper and lower aquifers. Because of its rich oil shale composition, this zone is the principal unit of mining interest.

2.1.2 Description of the Plant Complex

Figure 2.1-4 shows a general layout of the surface processing facilities, the initial mining area for the in situ retorts, and the storage and disposal sites on the tract.

The surface facilities will consist of five trains for the MIS process and eight trains for the Lurgi process. Other operations include product recovery and storage, steam and power generation, and wastewater treatment.

Mining for the in situ retorts will begin in the northwest section of the tract and eventually traverse under the entire tract. Figure 2.1-5 shows the anticipated panel arrangement for the retorts. Each panel will consist of a total of 96 retorts arranged in 16 clusters of six retorts each.

The shale removed from the in situ retorts will be stored temporarily before processing in Lurgi retorts. At present, raw shale storage is planned for Cottonwood Gulch, which is close to the surface processing operations. This drainage has a V-shaped transverse cross section with a gradient of 200-300 feet per mile and a capacity of some 65 million tons up to an elevation of 6,800 feet.

Sorghum Gulch, the planned processed shale disposal area located to the east of the plant site, has a net capacity of 212 million tons computed to an elevation of 7,000 feet. The processing wastes will be deposited in this area, and the completed landfill sections will be continually revegetated. Topsoil for revegetation will be obtained from a stockpile of material previously stripped during the site preparation. A water storage dam (runon retention dam) and runoff impoundment, as well as appropriate drainage systems, are planned for the disposal area.

2.1.3 Description of the Retorting Processes

MIS Retorting Process--

Figure 2.1-6 shows a cross section of a single MIS retort. Occidental MIS retorts are formed by rubblizing a vertical section of oil shale, in place, after mining approximately 23% of the shale to create the void space.

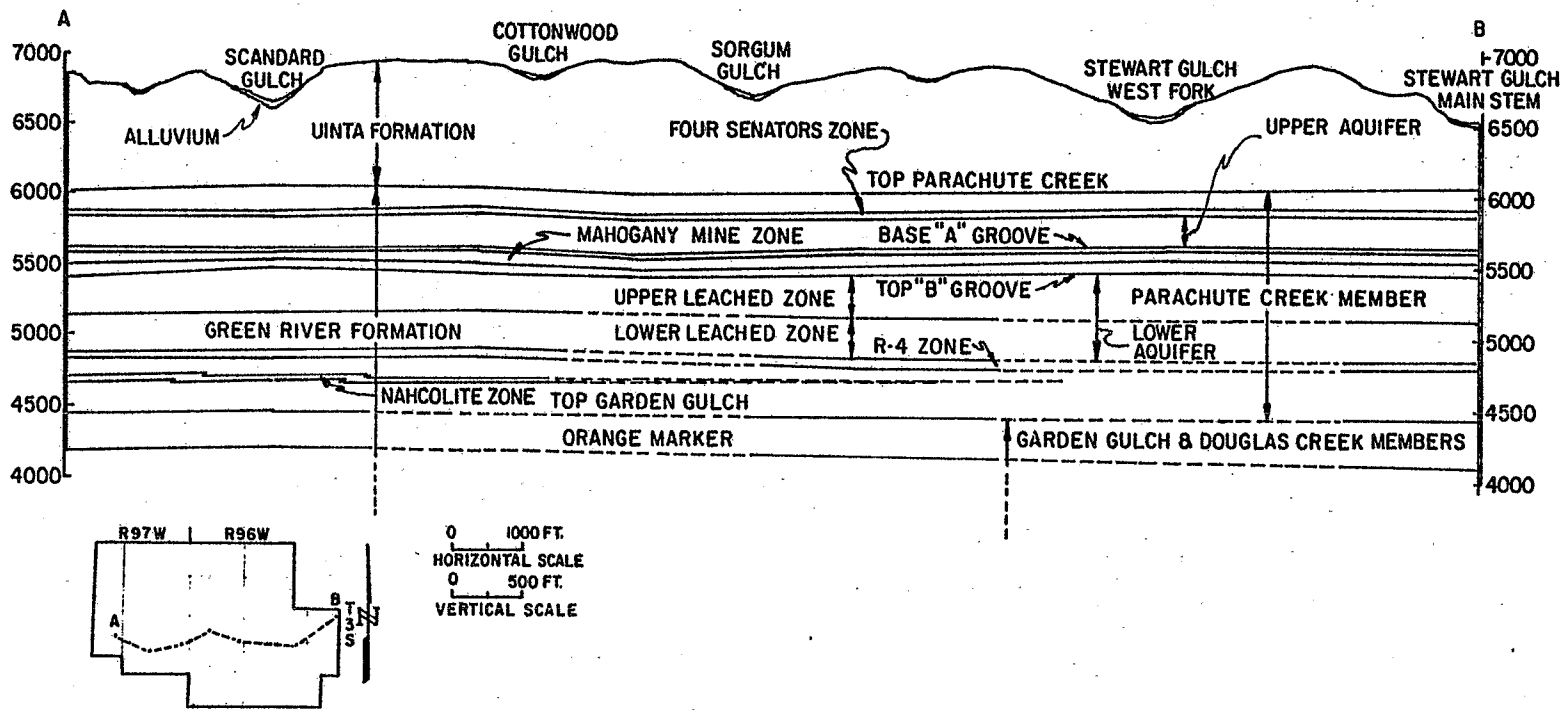

SOURCE: DRI based on Ashland Oil, Inc. and Shell Oil Co., February 1976

FIGURE 2.1-3 EAST-WEST GEOLOGIC CROSS SECTION, TRACT C-b

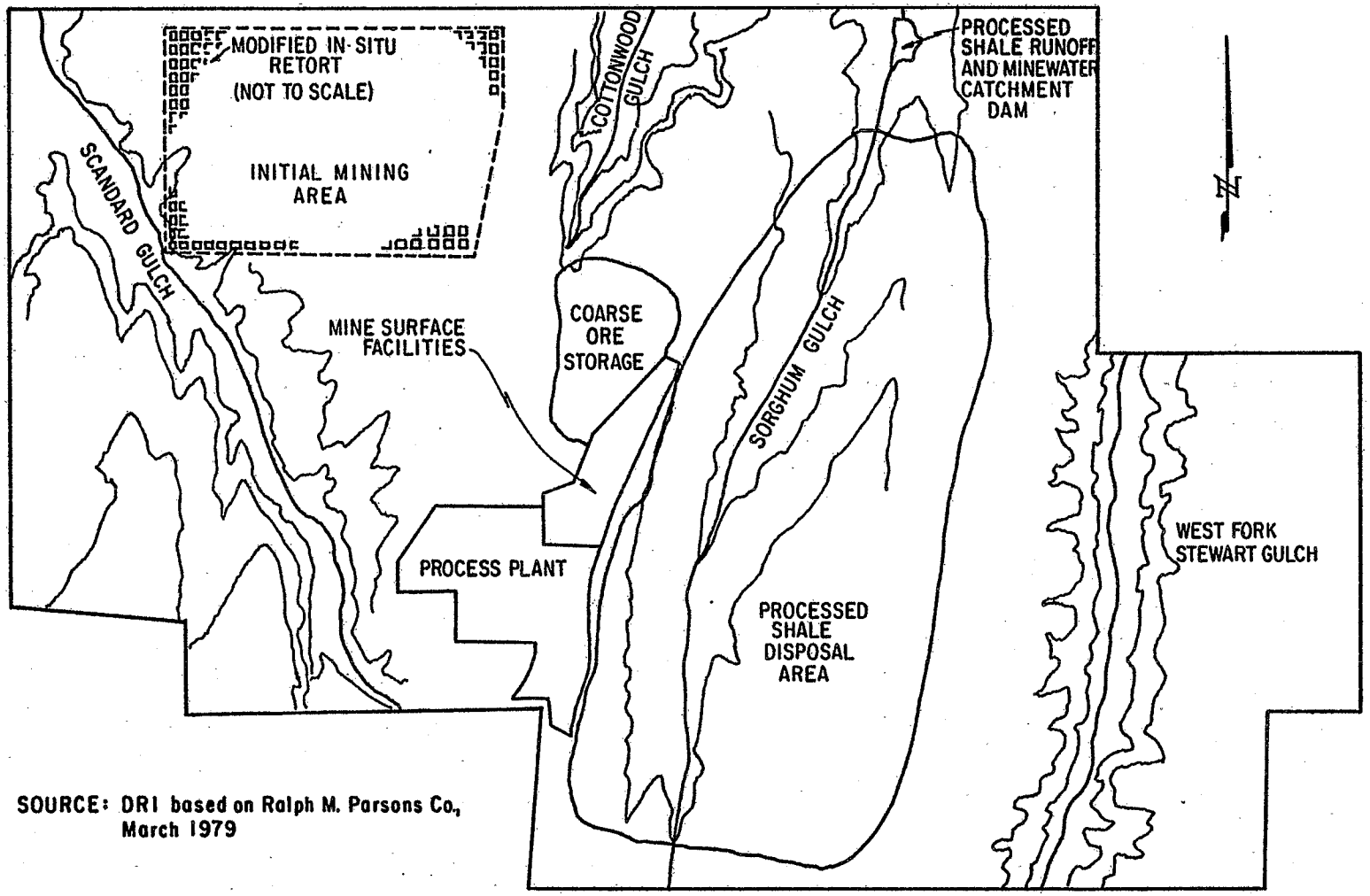

SOURCE: DRI based on Ralph M. Parsons Co., March 1979

FIGURE 2.1-4 PLANT COMPLEX

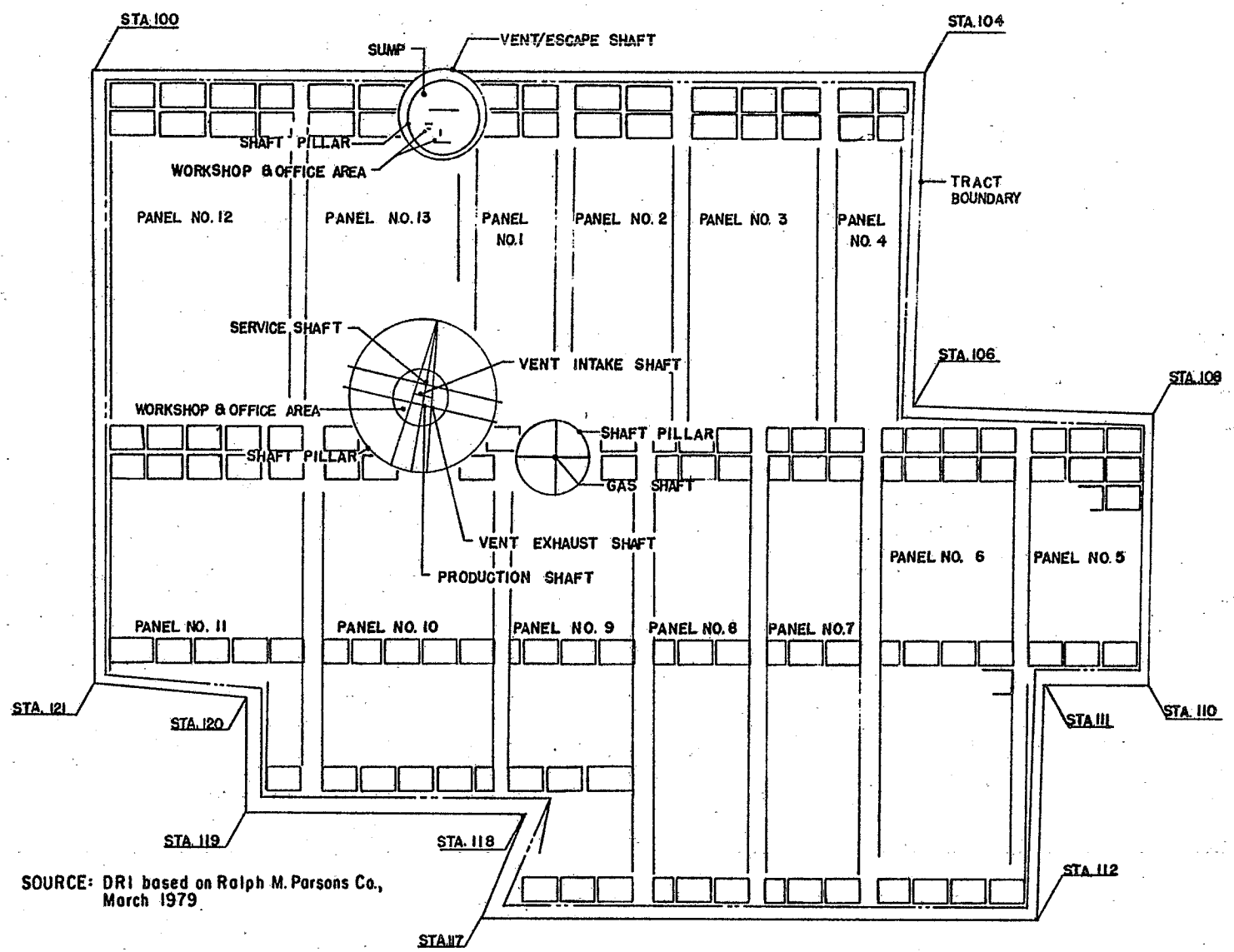

SOURCE: DRI based on Ralph M. Parsons Co., March 1979

FIGURE 2.1-5 MINE AND IN SITU RETORT PANEL ARRANGEMENT

Blasting expands the fragmented shale into this space. Retorts have three horizontal layers: the upper level, where drilling for rubblizing holes takes place and where required process air and steam are introduced; the intermediate level, where drilling of additional rubblizing holes will take place; and the production level, where the products of retorting--shale oil, gas, and water--will be collected.

After the levels are created through room-and-pillar mining, the shale is fractured through "symmetric" blasting, producing a uniform distribution of space and fractured shale laterally across the retort (Ricketts, 1980). A relatively small particle size (averaging 6 inches) and the homogeneous distribution of fractured shale in the retort is desirable for efficient operation. Regions of increased permeability promoting channeling of the gases could result in reductions in overall oil yield (Ricketts, 1980).

In the operation of an MIS retort, as illustrated in Figure 2.1-7, air and steam are admitted at the top through several openings which connect the retort air level to the top of the rubblized shale (Ralph M. Parsons Co., March 1979). Steam promotes the water/gas reaction and provides a means of controlling the combustion zone temperature. Retort start-up is accomplished through introduction of hot inert gas. When the temperature of the broken rock at the top of the retort is high enough, air is introduced to initiate combustion.

An operating retort contains four major zones. In the first, or preheat zone, the air/steam feed gas is preheated through contact with hot processed shale. The heated gas then reaches a combustion zone where oxygen is consumed by burning residual carbon in the processed shale. Below the combustion zone is the retorting zone where hot combustion gases heat the raw shale rubble (to approximately 900°F) and true retorting occurs. During retorting, the kerogen is pyrolyzed to produce gas, oil and oil vapor, as well as solid residue and residual carbon. The oil moves downward by gravity and precedes the advancing combustion front by six to ten feet. In the final zone, the combustion and retorting gases are cooled as they flow downward, condensing most of the vaporized oil. During the early stages of the burn, when the rock is still cool, some water is also condensed. The resulting liquid oil and water flow from the bottom of the operating retorts into production level drifts. The drifts are sloped to gravitate the oil/water stream to the primary oil/water sumps located adjacent to the production level drift bulkheads at each end of a cluster of six retorts. After initial gravity separation of the water and oil, the products are pumped to the surface through independent systems. At the surface, final separation is carried out in oil-in-water and water-in-oil processes. The raw shale oil is transferred to product storage without further treatment. The retort process water is treated and may provide part of the steam used at the beginning of the retorting process.

The retort gas mixture consists of light hydrocarbons from shale pyrolysis, carbon dioxide and water vapor from the combustion of carbonaceous residue and steam injection, carbon dioxide from the decomposition of inorganic carbonate (primarily dolomite and calcite), nitrogen from the combustion air, and ammonia and sulfur gases such as H_2S and COS. The gases are

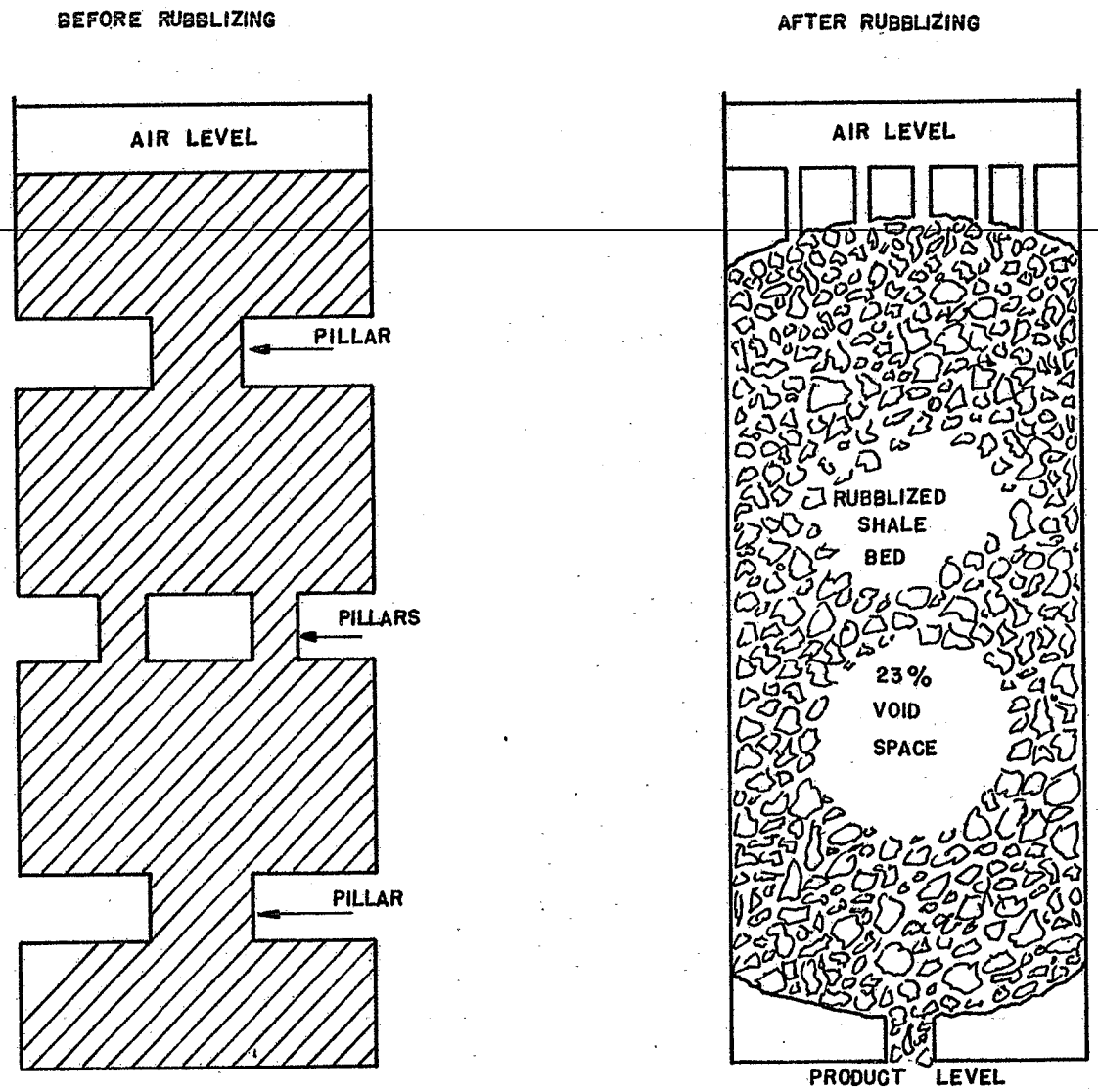

SOURCE: DRI based on Loucks, November 1979

FIGURE 2.1-6 MODIFIED IN SITU RETORT FORMATION

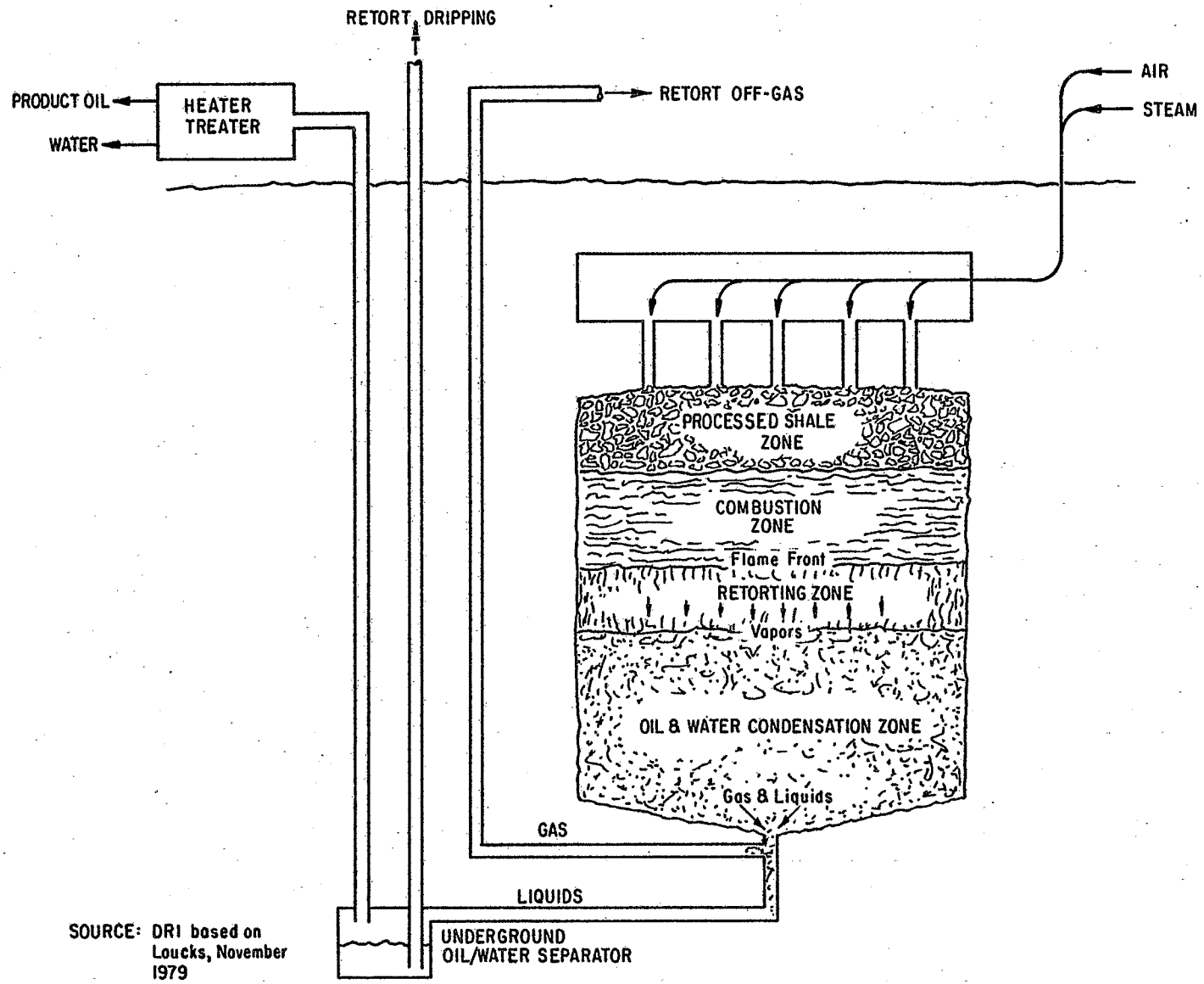

SOURCE: DRI based on Loucks, November 1979

FIGURE 2.1-7 MODIFIED IN SITU RETORTING

drawn to the surface by large blowers and fed to gas treating equipment where cooling occurs, producing a water condensate and absorbing ammonia, as well as some carbon dioxide and hydrogen sulfide. Subsequently, the gas may be burned directly or further treated for removal of H_2S. The gas will be used for steam and power generation. The blowers not only transport the gas stream but also allow the retorts to operate below atmospheric pressure (8.0 psi), preventing leakage from the retorts.

In a commercial plant, many retorts will operate at once. Occidental also plans to continue development of the MIS technology at Tract C-b to the point that very large retorts may be prepared and processed. Initially, 96 retorts will operate at one time, measuring 165 feet by 165 feet by 290 feet high and producing 69,000 BPSD on 26.7 gpt shale. These retorts will be arranged in 16 clusters of 6 retorts. If development of the technology for rubblizing and burning larger retorts is successful, clusters of six retorts will be replaced by clusters of three much larger retorts which essentially include rock that was part of the pillar structure between two smaller retorts. Each of these larger retorts will measure 165 feet by 390 feet by 290 feet high, and 48 will operate at one time, producing 69,000 BPSD. The use of these retorts will also allow the grade of shale mined for processing on the surface to increase through high grading. It will take only 24 hours per cluster or 16 days overall to ignite an entire panel of retorts, which means that there will be almost no staggering of the individual retort burns. Therefore, gas temperature and amounts of retort water will vary during different stages of the overall burn. Once a panel has been completed, the next panel in the area will be operated; water that happens to infiltrate the spent panel will be treated along with water from the retorts in progress.

Lurgi-Ruhrgas Retorting Process--

The oil shale mined to create void space for the MIS retorts will be processed in aboveground Lurgi-Ruhrgas retorts. A schematic for the Lurgi retorting process is shown in Figure 2.1-8. Initial crushing reduces the size of the run-of-mine shale to minus 8 inches. Final crushing further reduces the shale size to minus 1/4 to 1/3 inches. The crushed oil shale is fed through a feed hopper to a double screw mixer, where four to eight times its weight of a hot (1,200-1,300°F) circulating heat carrier, such as sand or processed shale from the collecting bin, is thoroughly mixed in, thus heating the entire mixture to approximately 950-1,000°F within a few seconds. At this temperature, pyrolysis of the kerogen in the oil shale occurs, resulting in the production of retort gas, shale oil vapor and water vapor. The circulating heat carrier and the partially retorted shale are then dropped from the screw mixer into the surge vessel, where residual oil components are distilled off. The mixture of heat carrier and retorted shale residue is passed to the lower section of the lift pipe, where combustion air (preheated to 450-900°F) is introduced, raising the mixture pneumatically to the collecting bin (TRW and DRI, 1975-1978; York, June 13, 1980). Essentially all available organic carbon contained in the retorted shale residue is burned in the lift pipe. Supplemental fuel may be added to the bottom of the lift pipe to sustain the combustion of the organic residue when processing leaner oil shales. Also, at the high lift pipe temperature, a moderate amount of carbonate decomposition occurs in the processed shale. At the top of the

lift pipe, the hot, burned shale is separated from the flue gases in the collecting bin. Fines are carried out of the collecting bin with the flue gas stream. The coarse-grained shale residue accumulates in the lower section of the collecting bin and flows continuously to the mixer. Partial removal of the solids to prevent accumulation in the collecting bin may be required if the fines carry-over is not sufficient. If the shale disintegrates to the extent that more fines are produced than expected, an additional coarse-grained heat carrier, such as sand or low-grade shale, may be needed. The combustion air supplied to the lift pipe is preheated by counter-current heat exchange with the flue gas stream in the preheat section of the waste heat boiler. The calcined minerals in the burned shale combine with the sulfur dioxide produced by combustion of the organic sulfur to form calcium and magnesium sulfites and sulfates.

The pyrolysis products stream containing shale fines is withdrawn at the end of the screw mixer and passed through two series-connected cyclones to a product recovery section. The fines are separated in these cyclones and returned to the recycle system. The vapor stream then passes through a sequence of three scrubbing coolers (not shown; see Figure 3.3-5 in Section 3). The first scrubbing cooler is designed to operate at a high temperature (~350°F) and to remove dust from the gas stream by condensation of heavier oil fractions. Circulation of the condensed heavy oil through the scrubber aids in removal of the dust. A dusty heavy oil is obtained at this point. The operating temperature of this scrubber is controlled by introducing and evaporating the gas liquor (see discussion below) through the scrubber. The amount of heavy oil and its properties can be varied in this fashion. In the next scrubbing cooler, further condensation of the oil takes place at a temperature above the dew point of water to produce a water-free middle oil (Schmalfeld, July 1975). Final cooling of the gas produces an aqueous gas condensate and a light oil fraction. The light oil is separated from the condensate or gas liquor in an oil/water separator. Partial amounts of ammonia and sulfur dioxide in the gas stream are absorbed in the gas liquor. If necessary, further removal of these species from the gas can be achieved by circulating more of the gas condensate through the third scrubber. Finally, the gas is scrubbed with a lean oil in the naphtha scrubber to recover naphtha (C_3, C_4, or C_5) and noncondensable gases, as deemed desirable. Residual H_2S may be removed from the remaining gas by one of several methods. The gas liquor may also be cleaned before reuse or discharge.

The flue gas stream in the lift pipe is dedusted in a cyclone after leaving the collecting bin; it is then routed through a heat exchanger for preheating of combustion air, a waste heat boiler to produce process steam, another cyclone, and a humidifier or flue gas conditioner. The flue gas stream is cooled somewhat and conditioned in the humidifier by adding steam generated during processed shale quenching. After humidification and cooling, residual dust is removed from the flue gas stream using an electrostatic precipitator and discharged into a processed shale quencher/moisturizer where more water is added to cool the solids. The processed shale residue, cooled to ~200°F, is moisturized to a suitable moisture content and discarded.

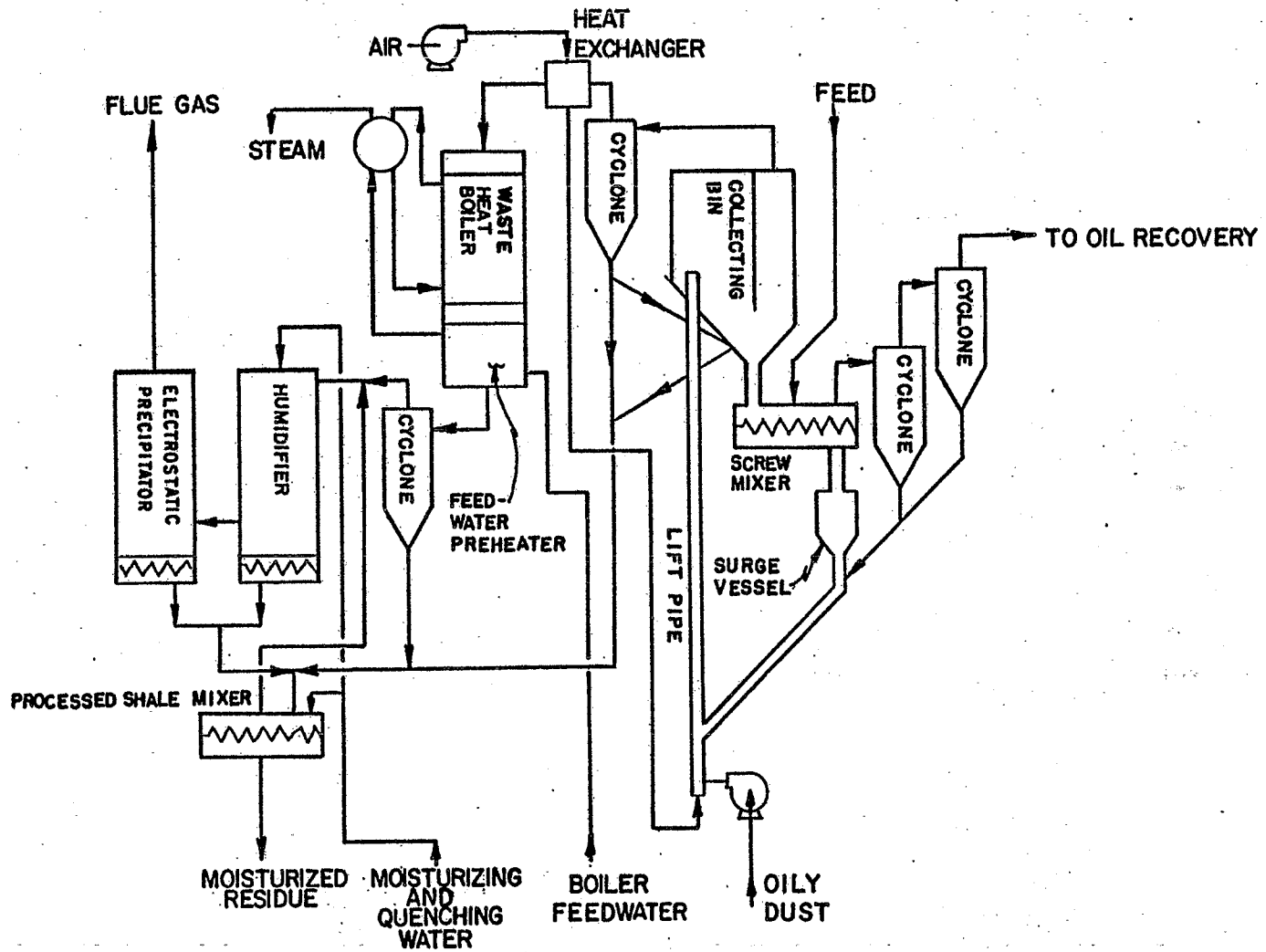

SOURCE: DRI based on Rio Blanco Oil Shale Co., February 1981

FIGURE 2.1-8 LURGI-RUHRGAS OIL SHALE RETORTING PROCESS

The dusty heavy oil obtained from the first scrubbing cooler is thinned with an available lighter oil from the process and subjected to centrifugation to remove the dust. The clean oil is stabilized by vaporizing the light oil components and then sent for storage. The recovered light oil is recycled to the process and the dust is fed to the bottom of the lift pipe and burned.

2.2 POLLUTION CONTROL CASE STUDIES

This document provides an opportunity to analyze integrated designs for an oil shale complex which uses two completely different retorting technologies simultaneously. In this manual, the Lurgi-Ruhrgas process is considered the secondary retorting method, as it only provides the aboveground support for the MIS retorting technology. Also, the streams emanating from the MIS process have greater environmental implications than the Lurgi processing streams, primarily due to their much greater volume. A more detailed discussion of pollution control for the Lurgi processing streams is presented in another manual (PCTM for Lurgi Oil Shale Retorting with Open Pit Mining) wherein it is the primary retorting method.

Two different pollution control case studies have been examined in detail, with each depicting a different technology for air pollution control (retort gas treatment). Water pollution control is the same for both case studies. In the area of solid waste pollution control and management, only a limited amount of information has been published by the developer; therefore, control technologies or approaches in this area cannot be analyzed in depth in this manual. The specific case studies analyzed are in agreement with information released by the developer; however, they are intended to serve as illustrative examples only and should not limit consideration of other alternatives.

Since standard industry practices are adopted for various minor treatments (e.g., boiler feedwater makeup treatment), these technologies are not discussed in detail. The impact on the cost of treatment as a result of variations in the pollution control strategy in other processing areas is assessed, but a detailed analysis of the treatment technology itself is not presented.

2.2.1 Key Features of Pollution Control

The Modified In Situ retorting portion of the MIS-Lurgi commercial plant complex will operate on a batch basis. The panel of 96 (or 48) retorts will be started in clusters, and each cluster will require 24 hours to start. Overall, there may be a difference of only 16 days or less between the first and last cluster, while the entire panel will burn for about 222 days. Therefore, there should be essentially no difference in the output from the retorts; rather, conditions similar to those from operation of a single retort should be found in the individual retorts in the panel.

In operating a single retort, however, fluctuations in temperatures and the quantities of certain streams occur, presenting unusual conditions for pollution control. At the Occidental Room 6 burn at Logan Wash, the retort

gas exit temperature varied from an initial value of about 70°F to 325°F over the 11 months of operation (Loucks, November 1979). Room 6 was comparable in size (164 feet x 164 feet x 334 feet high) to the retorts planned for the commercial operation; therefore, a similar increase in the retort gas temperature can be expected from the panel retorting.

Above 150°F the retort gas is capable of carrying all the water from the steam injection and that produced by combustion during retorting. From the start of a panel burn until the gas temperature has reached 150°F, however, a portion of the water will condense in the retort and be recovered with the oil. The retort water quantity will be maximum in the beginning and will eventually decrease to zero as the retort gas temperature increases. This retort water is difficult to treat and variations in its quantity limit the approaches that can be used.

Figure 2.2-1 shows a plot of retort gas temperature versus days of burning a panel. A gas temperature of 150°F should be reached by about 90 days. At the start of the burn, retort water should be produced at approximately 4,500 gpm, but it should decrease in quantity to zero by 90 days. At the same time, the quantity of gas condensate produced by cooling the retort gas stream should increase from zero at the start of the burn (essentially no cooling is required) to about 3,700 gpm by 90 days and then remain steady for the balance of the 220-day burn. The gas coolers must also be designed to accommodate an increasing gas temperature up to 325°F, with the accompanying increase in gas volume and cooling capacity required. Water treatment systems must be capable of operating effectively over a broad range of flows or compositions if the gas condensate and retort water are combined.

It also appears possible that the retort gas composition may vary during the burning of a panel. Experience at Logan Wash did not reveal any unexpected changes in gas compositions (Loucks, November 1979), but a recent pilot MIS retort burn at Tract C-a indicated that the H_2S concentration varied from very low levels at the start of the burn to as high as 4% (Sklarew, et al., February 1981). The COS concentration was also observed to increase, eventually reaching as high as ~1,500 ppmv. Obviously, if a similar phenomenon is observed at the MIS-Lurgi commercial facility, the effectiveness of the gas treating technologies may be impaired, resulting in increased SO_2 emissions from the facility or the need to employ additional SO_2 control.

2.2.2 Pollution Control Case Studies

The block flow diagrams for the two case studies (A and B) examined in this manual are presented in Figures 2.2-2 and 2.2-3. Case Study A is the base plant presented in the latest PSD permit application (Occidental Oil Shale, Inc. and Tenneco Shale Oil Co., April 1981), while Case Study B is in accordance with the earlier PSD permit application which was approved by the EPA (Ashland Oil, Inc. and Occidental Oil Shale, Inc., October 1977; U.S. EPA, December 15, 1977). These case studies present alternate treatment schemes for the retort gas only; control technologies in other areas remain common to both.

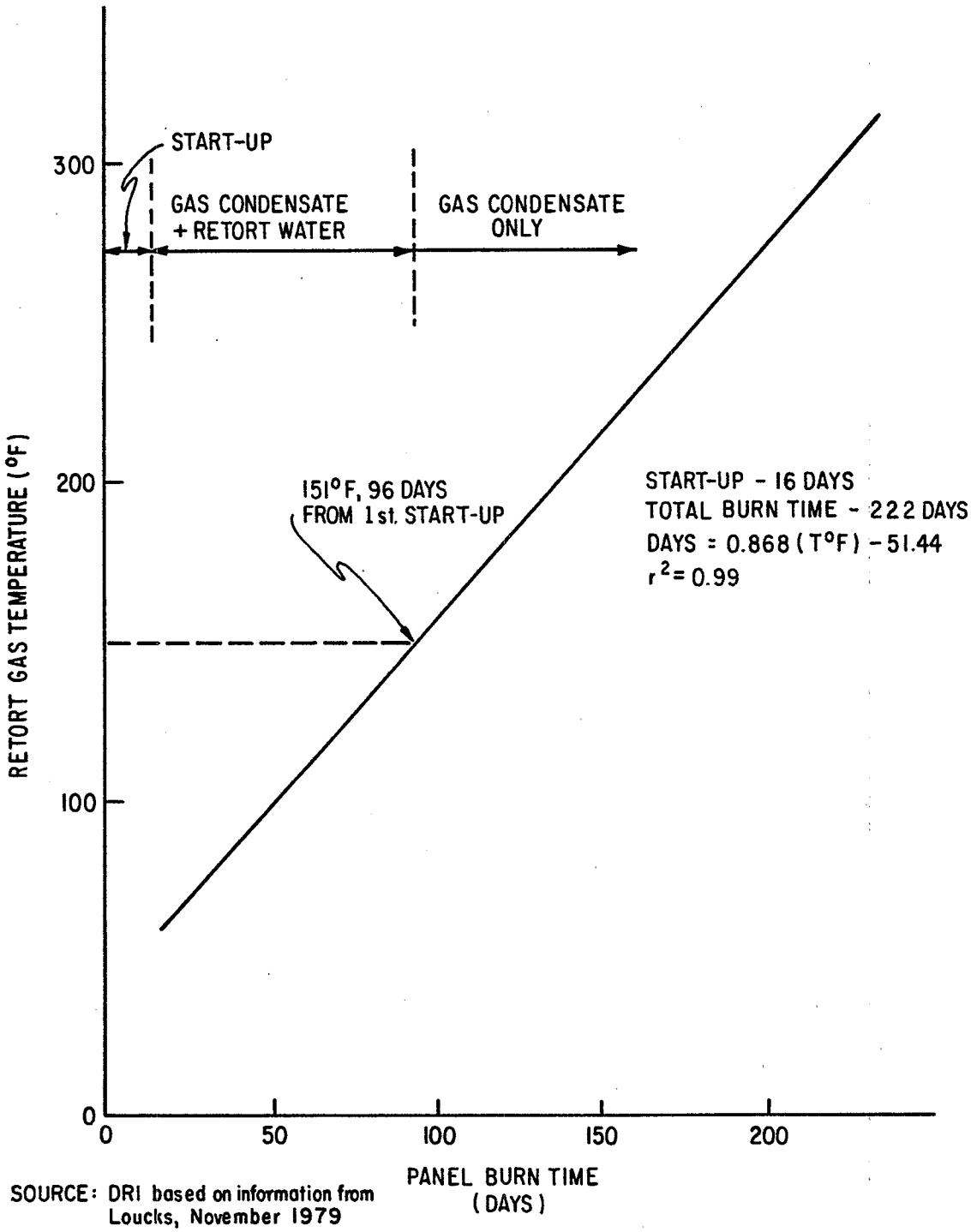

SOURCE: DRI based on information from Loucks, November 1979

FIGURE 2.2-1 CHANGE IN RETORT GAS TEMPERATURE OVER TIME FOR MIS PROCESS

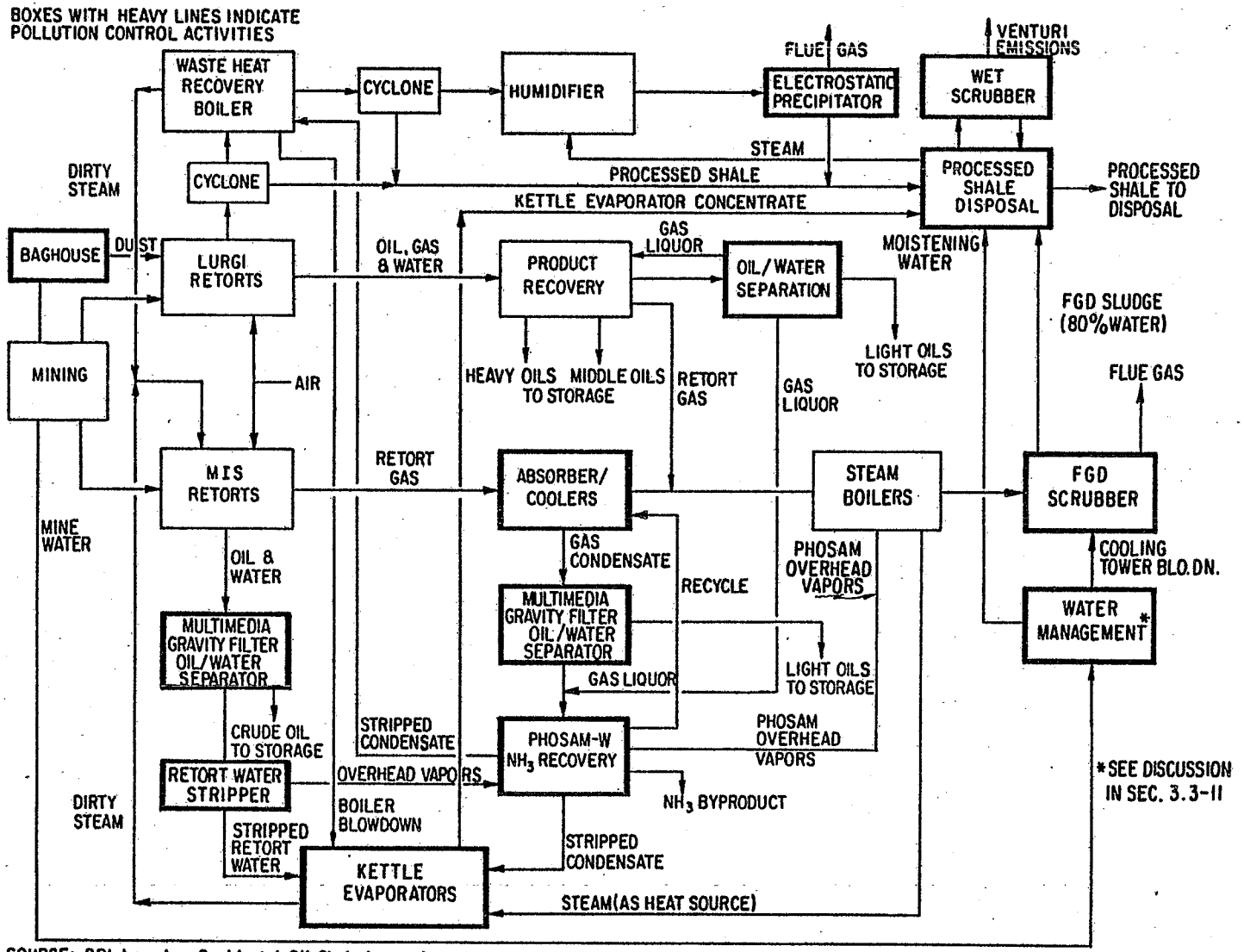

SOURCE: DRI based on Occidental Oil Shale, Inc. and Tenneco Shale Oil Co., April 1981

FIGURE 2.2-2 PROCESS FLOW DIAGRAM, CASE STUDY A

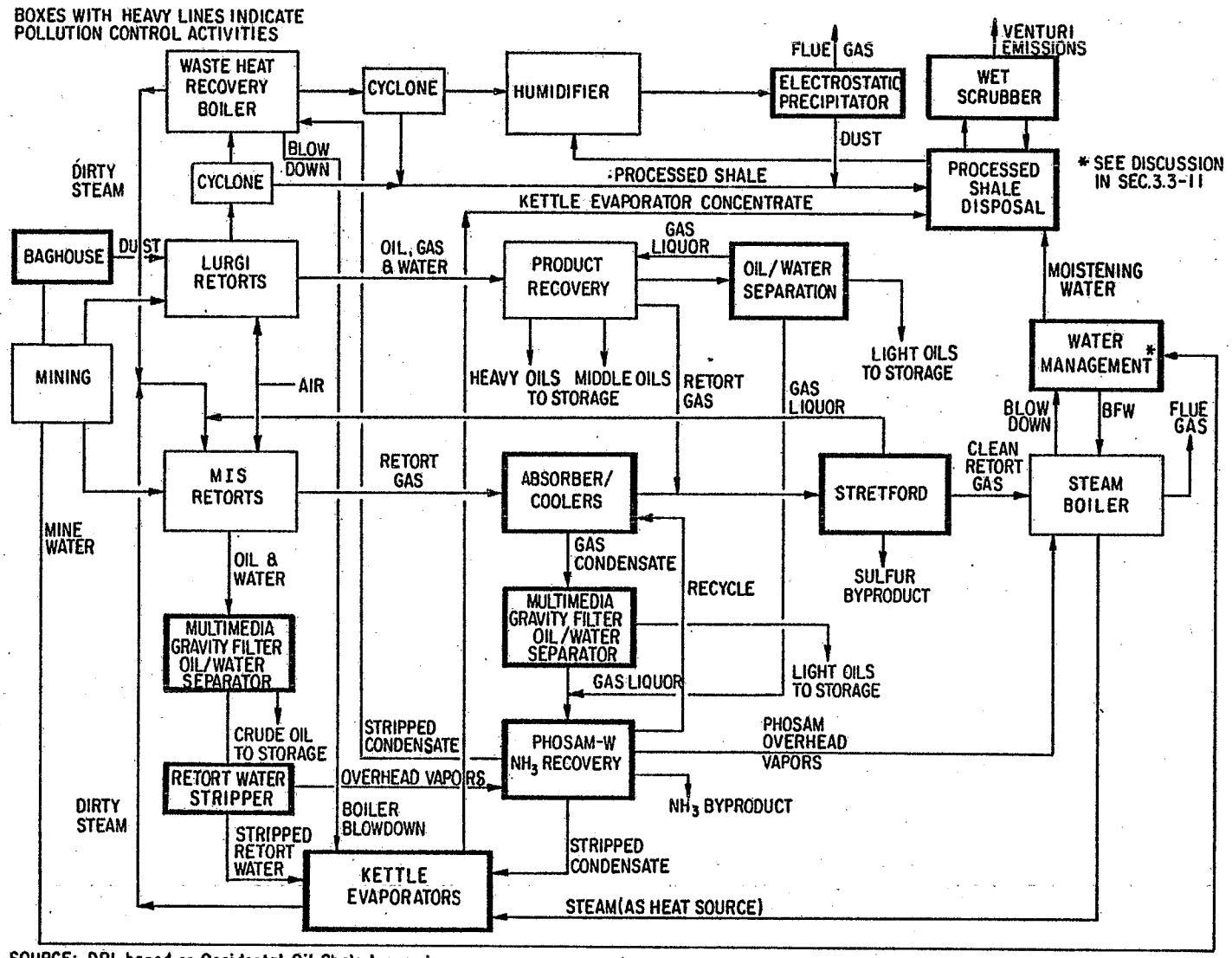

SOURCE: DRI based on Occidental Oil Shale, Inc. and Tenneco Shale Oil Co., April 1981, and Ashland Oil Inc. and Occidental Oil Shale, Inc., October 1977

FIGURE 2.2-3 PROCESS FLOW DIAGRAM, CASE STUDY B

Case Study A--

The basic processing and pollution control systems proposed by Cathedral Bluffs Shale Oil Company are presented in this case study. A process flow diagram is presented in Figure 2.2-2 and a brief overview of the entire process follows. The pollution control areas are highlighted in the diagram by heavy lines.

An MIS retort is formed by mining out a certain amount of oil shale at several levels in a zone (this zone becomes the actual retort) and then rubblizing the remainder of the rock into the mined out cavities. With proper detonation techniques, fairly uniform-sized rubble (~6 inches) can be obtained. Several retorts adjacent to each other, but separated by walls 50-60 feet thick, are prepared in a similar fashion. The retort preparation activities (e.g., mining, blasting, conveying) generate fugitive particulates along with an intermittent flow of blast fumes. Additionally, the diesel-powered mining equipment emits exhaust fumes in the mine. While some of the fugitive particulates are controlled by local application of dust suppression agents (e.g., water and foam sprays), other applicable dust control technologies are not used in the mine. Rather, a very large volume of fresh air is circulated through the mine and vented to the atmosphere. The volume of air dilutes the pollutant concentrations to a very low level.

After igniting the retorts with external fuel or hot inert gas, controlled amounts of air and steam are introduced at the top of the retorts. The air aids in sustaining combustion of the shale, while the steam primarily controls the temperature in the combustion zone. The products of retorting--retort gas, oil and water--travel downward through the retort. The condensed oil and water are collected in a sump and passed through an underground oil/water separator. The separated products are then pumped individually to the surface. The gaseous products are also brought to the surface using large suction blowers.

The retort water contains dissolved gases and volatile organic compounds; therefore, its disposition is of environmental concern. The dissolved volatiles, primarily NH_3 and H_2S, in the retort water are first removed by steam stripping and then controlled sequentially by the Phosam-W ammonia recovery process and FGD process. The stripped retort water is used as a source for low-quality steam generation. Steam-heated kettle evaporators are used to produce this steam which is recycled back to the MIS retorts. The concentrated sludge or blowdown from the kettle evaporators is used in moisturizing the Lurgi processed shale (discussed later).

The gaseous product of retorting, or retort off-gas, contains NH_3 and H_2S; therefore, its disposition should also be of environmental concern. The retort gas is first cooled by scrubbing with water, which also removes a majority of the NH_3, then is burned in process steam boilers to produce steam and electricity by cogeneration. The boilers produce a flue gas which contains SO_2 from the combustion of H_2S and other sulfur compounds. This flue gas is sent to the FGD system where the SO_2 reacts with the lime reagent to form a sludge, thereby removing it from the flue gas. The FGD sludge is also used to moisturize the Lurgi processed shale. The makeup water for the

FGD system is obtained from the cooling tower in the form of cooling tower blowdown. The scrubbed flue gas, practically free from SO_2 (~50 ppmv), is released to the atmosphere.

The ammoniacal gas condensate, obtained as a result of the MIS off-gas cooling and scrubbing, is passed through an oil/water separator to remove the condensed lighter oil fractions; it is then sent to the Phosam-W unit for the removal and recovery of the dissolved ammonia. A portion of the ammonia-free water from the Phosam-W process is recycled to the off-gas absorber/cooler, another portion is sent to the Lurgi waste heat boiler, and the remainder is used in the kettle evaporators for raising low-quality steam. Again, the blowdown from the kettle evaporators is used for Lurgi processed shale moisturizing.

Prior to Lurgi processing of the mined shale, the run-of-mine shale is reduced to approximately 1/4-inch size. This involves crushing and screening, both of which generate particulates. Wherever practical, baghouses are used to control the airborne dust. Additionally, water and foam sprays are used to control fugitive dusts emanating from the materials conveying and transferring operations.

In the Lurgi retort, the oil shale is pyrolyzed by mixing it with hot processed shale. The product vapors are separated from the processed shale and sent for product recovery. The processed shale, after the initial pass through the retort, still contains some residual organic matter. The energy from this residual matter is recovered by burning the processed shale in a lift pipe. The flue gas from the lift pipe would normally contain SO_2 as a result of the combustion of organic sulfur compounds; however, a moderate amount of calcination of the processed shale occurs in the lift pipe and a substantial amount of the SO_2 is claimed to be chemically fixed on the calcined material (Occidental Oil Shale, Inc. and Tenneco Shale Oil Co., April 1981). The flue gas is separated from the processed shale by settling and centrifugation in cyclones. The last traces of the dust carried over with the flue gas are eventually removed by electrostatic precipitation.

A required amount of the processed shale separated earlier from the flue gas is recycled to the retort, while the remainder is quenched and moisturized before disposal. Primarily the sludges from the FGD and low-quality steam generators are used as the water sources for the quenching and moisturizing operations. The quenching operation generates some steam which is mixed with the flue gas. This humidification of the flue gas reduces its electrical resistivity, which helps in obtaining a better dust removal efficiency in the electrostatic precipitator. Processed shale moisturizing and mixing also generate some airborne particulates which are scrubbed with water in a venturi scrubber. The emission, primarily steam, is released to the atmosphere, while the scrubber sludge is returned to the moisturizer and disposed of along with the processed shale.

The product vapors from the Lurgi retort are scrubbed and cooled in several steps to condense out various oil fractions. The moisture in the vapors also condenses as the gas liquor. Most of the NH_3 in the retort vapors dissolves in the gas liquor, while H_2S remains in the gaseous phase.

The gas liquor is combined with the gas condensate from the MIS off-gas cooling and sent for recovery of ammonia in the Phosam-W unit.

The retort gas is scrubbed with a lean oil to remove higher boiling hydrocarbons (naphtha) and then burned along with the MIS off-gas in the process steam boilers. The flue gas from the boilers, as discussed previously, is sent to the FGD unit for the removal of SO_2.

Water management activities consist of satisfying the process steam and cooling water needs, as well as efficient management of the aqueous waste streams. The process steam is generated in two different types of boilers. The high-pressure, high-quality steam is raised from the clarified source water. This steam is primarily used in driving the steam turbines and in cogeneration of electricity. A small portion of this steam is also used in other process units where high-quality steam is required. The boiler blowdown is equalized with other waste streams and eventually used in processed shale moisturizing. Process generated waters (e.g., MIS gas condensate, retort water, Lurgi gas liquor) are used in raising the low-quality steam. This steam is primarily used in the MIS retorts. The low-quality steam generators, or kettle evaporators, are driven by the high-pressure steam. Since these generators do not use any fuel, there is no flue gas emission. The blowdown, or concentrates, from the low-quality steam generators is also used in processed shale moisturizing. Clarified source water is used for the plant cooling needs. The blowdown from the cooling tower is used as the water source for the FGD process.

Other conventional water treatment practices include source water clarification, boiler feedwater softening, cooling tower makeup treatment, equalization basins, etc.

Proper maintenance of valves, pumps, etc., and suitable product storage tanks provide control over fugitive hydrocarbon emissions.

Case Study B--

This case study examines the alternative of recovering sulfur from the MIS and Lurgi retort gases before they are consumed in the boilers. Specifically, the Stretford technology is examined as an alternative for FGD. As Figure 2.2-3 illustrates, the remaining process areas and control technologies are identical to Case Study A.

Variations in the air pollution control strategy clearly affect other control areas in this case study. For example, the loss of approximately 1,500 gpm of water, which occurs with the FGD unit, is eliminated. This reduces the overall consumption of water. The cooling tower blowdown, which was used as the FGD makeup water, can now be used for some other purpose. Additional cooling of the MIS off-gas before feeding it to the Stretford unit produces an additional amount of condensate which is treated by the Phosam-W process. Proportionately more stripped water is produced in the Phosam-W process and sent to the kettle evaporators; thus, more blowdown, or concentrate, is produced. These changes affect overall water management in that the waste streams must be routed differently than in Case Study A.

2.3 SUMMARY OF POLLUTION CONTROL TECHNOLOGIES AND COST

The control technologies examined in the two case studies are summarized in Table 2.3-1. As a means of organizing the presentation, the plant complex is divided into different areas of processing activities and pollution control. The areas in which alternative controls have been examined are indicated, and it can be seen that most controls are the same in both case studies. It should be noted that the control technologies examined here are not the only choices available nor are they necessarily sufficient for pollution control; rather, they are merely examples from broad classes of technologies. These examples have been examined on the basis that they have been proposed at one time or another, in conjunction with MIS retorting, by the Tract C-b developers. Additionally, good vendor guarantees and cost data on these technologies were available for the economic analysis.

Throughout this analysis of the MIS-Lurgi project, the distinction between process and pollution control is not always clear. For example, the cooling and scrubbing of the MIS off-gas could be considered a processing step because it affords recovery of a significant amount of light oil fractions. However, the cooling and scrubbing of the off-gas also removes practically all of the NH_3; thus, it also could be considered pollution control. Similarly, boiler feedwater treatment, cooling water treatment, mine water clarification, etc., are listed as pollution control measures, when they may also be classified as process related activities. In some such instances--for example, the cooling water treatment--only the cost increase due to the pollution control activities is included, but this distinction is not always possible. Consideration of an activity as a pollution control or as a process related activity becomes important when calculating the total cost of pollution control. Because all of the borderline activities are classified as pollution control, the user of this manual should be made aware that the total pollution control costs are conservatively stated due to the inclusion of activities which could also be considered process related.

All major pollution controls examined in the two case studies are listed in Table 2.3-2, along with information describing location, control function and size. The case study in which each control is shown is also indicated. More detailed design information is presented in Section 5. A discussion of other possible control choices is also given in that section.

Table 2.3-3 summarizes the costs of air pollution control and water management and pollution control for the two case studies analyzed for the MIS-Lurgi facility. The costs for solid waste management are not included in the table because of insufficient information regarding the developer's plans for solid waste disposal. Detailed engineering costs for the technologies analyzed and the cost computation methodology are presented in Section 6.

The two case studies differ primarily in the area of sulfur control: Case Study A uses limestone scrubbers for flue gas desulfurization, and Case Study B uses the Holmes-Stretford process for the removal of H_2S from the fuel gases. The fixed capital and direct operating costs for the Stretford process are somewhat lower than those for the limestone scrubbers. Furthermore, recovery of sulfur as a by-product reduces the total annual

TABLE 2.3-1. SUMMARY OF POLLUTION CONTROL TECHNOLOGIES

Case Study	Areas of Control						
	Mining, Crushing and Materials Handling	Retorting Treatment	Retort Gas Treatment	Retort Water Treatment	Gas Condensate Treatment	Steam, Power Generation	Solid Waste Management
A	Baghouses	Lurgi: Electrostatic Precipitator for Flue Gas	MIS Absorber/ Cooler	Retort Water Stripper Kettle Evaporators	Phosam-W Ammonia Recovery Unit Kettle Evaporators	FGD for SO_2 control	Lurgi: Surface Landfill
	Water and Foam Sprays	Lurgi: Venturi Wet Scrubber for Moisturizer					MIS: Abandonment without treatment
B	Same as A	Same as A	MIS Absorber/ Cooler Stretford	Same as A	Same as A	Low sulfur fuel used for steam and power generation	Same as A

Sources: DRI based on information from Ashland Oil, Inc. and Occidental Oil Shale, Inc., October 1977, and Occidental Oil Shale, Inc. and Tenneco Shale Oil Co., April 1981.

TABLE 2.3-2. INVENTORY OF MAJOR POLLUTION CONTROL TECHNOLOGIES

Type of Control (Number of Units)	Origin of Material Controlled	Material Controlled	Flow Rate Each Unit	Processing Activity Area	Case Study
Fabric Filter (4)	Conveyor Transfer Points (from production shaft to conveyor transfer tower)	Raw Shale Dust	2,000 ACFM	Mining, etc.	A, B
Fabric Filter (1)	Conveyor Transfer Points (from raw shale stock-pile to conveyor transfer tower)	Raw Shale Dust	2,000 ACFM	Mining, etc.	A, B
Fabric Filter (4)	Raw Shale Storage Load-in	Raw Shale Dust	12,500 ACFM	Mining, etc.	A, B
Fabric Filter (1)	Raw Shale Crushing and Screening	Raw Shale Dust	142,000 ACFM	Mining, etc.	A, B
Fabric Filter (1)	Conveyor Transfer Points (from crushing and screening to fine ore transfer tower)	Raw Shale Dust	16,000 ACFM	Mining, etc.	A, B
Fabric Filter (1)	Fine Ore Storage Load-in	Raw Shale Dust	1,200 ACFM	Mining, etc.	A, B
Fabric Filter (2)	Fine Ore Storage Load-out	Raw Shale Dust	2,000 ACFM	Mining, etc.	A, B
Water and Foam Sprays	Conveyor Transfer Points, Open Stockpiles, etc.	Raw and Processed Shale Dust	--	Mining, etc.	A, B
Electrostatic Precipitator (8)	Lurgi Flue Gas Discharge System	Processed Shale Dust	198,000 ACFM	Retorting Treatment	A, B
Venturi Wet Scrubber (1)	Lurgi Processed Shale Quencher/Moisturizer	Processed Shale Dust	38,600 ACFM	Solid Waste Management	A, B
MIS Retort Gas Absorber/ Cooler (5)	Gas Recovery and Treatment	NH_3	894,000 ACFM	Retort Gas Treatment	A, B
Flue Gas Desulfurization (10)	Boiler Flue Gas	SO_2	762,000 ACFM	Steam Power Generation	A
Stretford (30)	Gas Recovery and Treatment	H_2S	33,000 ACFM	Retort Gas Treatment	B
Oil/Water Separator (1)	MIS Absorber/Cooler	Oil Emulsion in Water	6,210 gpm (max.)	Process Water Treatment	A, B
Oil/Water Separator (1)	Lurgi Pyrolysis and Oil Recovery	Oil Emulsion in Water	324 gpm	Process Water Treatment	A, B
Oil/Water Separator (1)	MIS Retorts	Oil Emulsion in Water	4,520 gpm (max.)	Process Water Treatment	A, B

(Continued)

TABLE 2.3-2 (cont.)

Type of Control (Number of Units)	Origin of Material Controlled	Material Controlled	Flow Rate Each Unit	Processing Activity Area	Case Study
Multimedia Gravity Filtration Unit (24)	MIS Absorber/Cooler, MIS Retorts	Suspended Matter, etc.	610 gpm	Process Water Treatment	A, B
Retort Water Stripper (1)	Oil/Water Separator	Dissolved Volatiles	4,520 gpm (max.)	Process Water Treatment	A, B
Kettle Evaporator (20)	Retort Water Stripper, Phosam-W, Waste Heat Boiler	Dissolved Solids	170 gpm (av.)	Process Water Treatment	A
Kettle Evaporator (20)	Retort Water Stripper, Phosam-W, Waste Heat Boiler	Dissolved Solids	186 gpm (av.)	Process Water Treatment	B
Phosam-W Ammonia Recovery Unit (1)	Oil/Water Separator and Retort Water Stripper	H_2S and NH_3 in Water	6,721 gpm	Process Water Treatment	A
Phosam-W Ammonia Recovery Unit (1)	Oil/Water Separator, Retort Water Stripper, and Stretford Unit	H_2S and NH_3 in Water	7,054 gpm	Process Water Treatment	B
Floating Roof Oil Storage Tanks (3)	Product Storage	Hydrocarbons	804,000 bbl (total)	Miscellaneous Air Treatment	A, B
Ammonia Storage Tanks (5)	Phosam-W Ammonia Recovery Unit	NH_3	57 TPSD (av.)	Miscellaneous Air Treatment	A, B
Catalytic Converters	Diesel Equipment	CO, Hydrocarbons	--	Miscellaneous Air Treatment	A, B
Proper Maintenance of Valves, Pumps, etc.	Valves, Pumps, etc.	Hydrocarbons	--	Miscellaneous Air Treatment	A, B
Mine Water Clarification (1)*	Mine Water	Suspended Matter, etc.	6,142 gpm	Miscellaneous Water Treatment	A
	Mine Water	Dissolved Solids	4,276 gpm	Miscellaneous Water Treatment	B
Boiler Feedwater Treatment (1)*	Mine Water	Dissolved Solids	292 gpm	Miscellaneous Water Treatment	A
	Mine Water	Dissolved Solids	283 gpm	Miscellaneous Water Treatment	B
Cooling Water Treatment (1)*	Mine Water	Dissolved Solids	4,502 gpm	Miscellaneous Water Treatment	A
	Mine Water	Dissolved Solids	2,670 gpm	Miscellaneous Water Treatment	B

(Continued)

TABLE 2.3-2 (cont.)

Type of Control (Number of Units)	Origin of Material Controlled	Material Controlled	Flow Rate Each Unit	Processing Activity Area	Case Study
Equalization Pond (1)	Water Treatments	Suspended Matter, etc.	1,015 gpm	Miscellaneous Water Treatment	A
	Water Treatments	Suspended Matter, etc.	1,345 gpm	Miscellaneous Water Treatment	B
Runoff Oil/Water Separator (1)	Plant Site Storm Sewer	Suspended Matter, etc.	191 gpm	Miscellaneous Water Treatment	A, B
Runon Catchment Dam (1)	Sorghum Gulch Watershed	Leachable Compounds	--	Surface Hydrology	A, B
Runoff Catchment Embankment (1)	Waste Landfill	Leached Compounds	--	Surface Hydrology	A, B
Runoff Collection System	Waste Landfill	Leachable Compounds	--	Surface Hydrology	A, B
Dust Suppression	Waste Landfill	Particulates	--	Surface Stabilization	A, B
Grubbing, Stripping and Clearing	Waste Landfill	Soil (erosion)	--	Surface Stabilization	A, B
Reclamation and Revegetation	Waste Landfill	Soil (erosion)	--	Surface Stabilization	A, B

* The technologies marked with an asterisk (*) could be considered part of the process as well as pollution control.

Source: DRI estimates based on information from Ashland Oil, Inc. and Occidental Oil Shale, Inc., October 1977, and Occidental Oil Shale, Inc. and Tenneco Shale Oil Co., April 1981.

TABLE 2.3-3. POLLUTION CONTROL COST SUMMARY[a]

Control Medium	Fixed Capital Cost ($000's)	Total Annual Capital Charge ($000's)	Total Annual Operating Cost ($000's)	Total Annual Control Cost ($000's)	Per-barrel Control Cost (cents)
CASE STUDY A					
Air Pollution	485,111	94,862	(22,285)[b]	72,577	170
Water Management and Pollution Control	77,754	18,344	55,387	73,731	172
Solid Waste Management[c]	N.D.	N.D.	N.D.	N.D.	N.D.
CASE STUDY B					
Air Pollution	463,559	90,623	(33,528)	57,095	133
Water Management and Pollution Control	78,397	18,492	56,307	74,799	175
Solid Waste Management	N.D.	N.D.	N.D.	N.D.	N.D.

[a] See Section 6 for details.

[b] Values in parentheses ( ) indicate an annual by-product credit greater than the total annual operating cost.

[c] The solid waste management costs have not been determined (N.D.) in an integrated fashion. See Section 6 for details on individual solid waste management items.

Source: DRI.

operating cost for the Stretford process. As a result, the air pollution control costs for Case Study B appear to be lower than the costs for Case Study A.

The variation in sulfur control strategy introduces slight changes in the water treatment technologies. For example, the Phosam-W ammonia unit and kettle evaporators in Case Study B are larger than in Case Study A, with a resulting increase in the fixed capital costs, total annual operating costs, and total annual and per-barrel control costs.

SECTION 3

PROCESS FLOW DIAGRAMS AND FLOW RATES

Flow diagrams illustrating all operations in the MIS-Lurgi plant complex are presented in this section. The integrated designs shown are consistent with proposed development plans.

3.1 STRUCTURE OF THE DIAGRAMS

In order to understand the interactions throughout the plant complex, an overall flow diagram is presented first, followed by flow diagrams for each unit process. Flow rates for all major process and waste streams are indicated on each of the more detailed diagrams; flow rates for streams of an auxiliary nature, such as cooling water and steam, are included only when relevant to pollution control activities. The following symbols are used to indicate the physical state of each stream:

- Gases--Circles
- Liquids--Squares
- Solids--Hexagons.

A unique stream number is placed within each symbol. In addition, an asterisk (*) is placed next to the symbol for a stream if it comes into contact with the environment at any point in the process. The stream numbering system established in this section is used throughout this manual.

3.2 OVERALL PLANT COMPLEX

A flow diagram of the complete plant complex, emphasizing the waste streams produced, is presented in Figure 3.2-1. Mining and rubblizing activities will create large panels of MIS retorts and the supporting production shafts underground. Each panel will contain 48 large retorts (or 96 small retorts) and operate for approximately 220 days. The retorts will be ignited in clusters of six. First, hot inert gas is injected to raise the shale temperature at the top of the retorts to the ignition point; then, air and steam replace the inert gas. Each cluster of six retorts will require about 24 hours to ignite.

The mined shale will be brought to the surface, finely crushed, and fed to a surface Lurgi-Ruhrgas plant for retorting. The raw shale handling operations will generate particulate emissions which will be controlled by baghouses and by application of wet dust suppressants. In the Lurgi process, the raw shale is mixed with hot, burned, processed shale, raising it to a

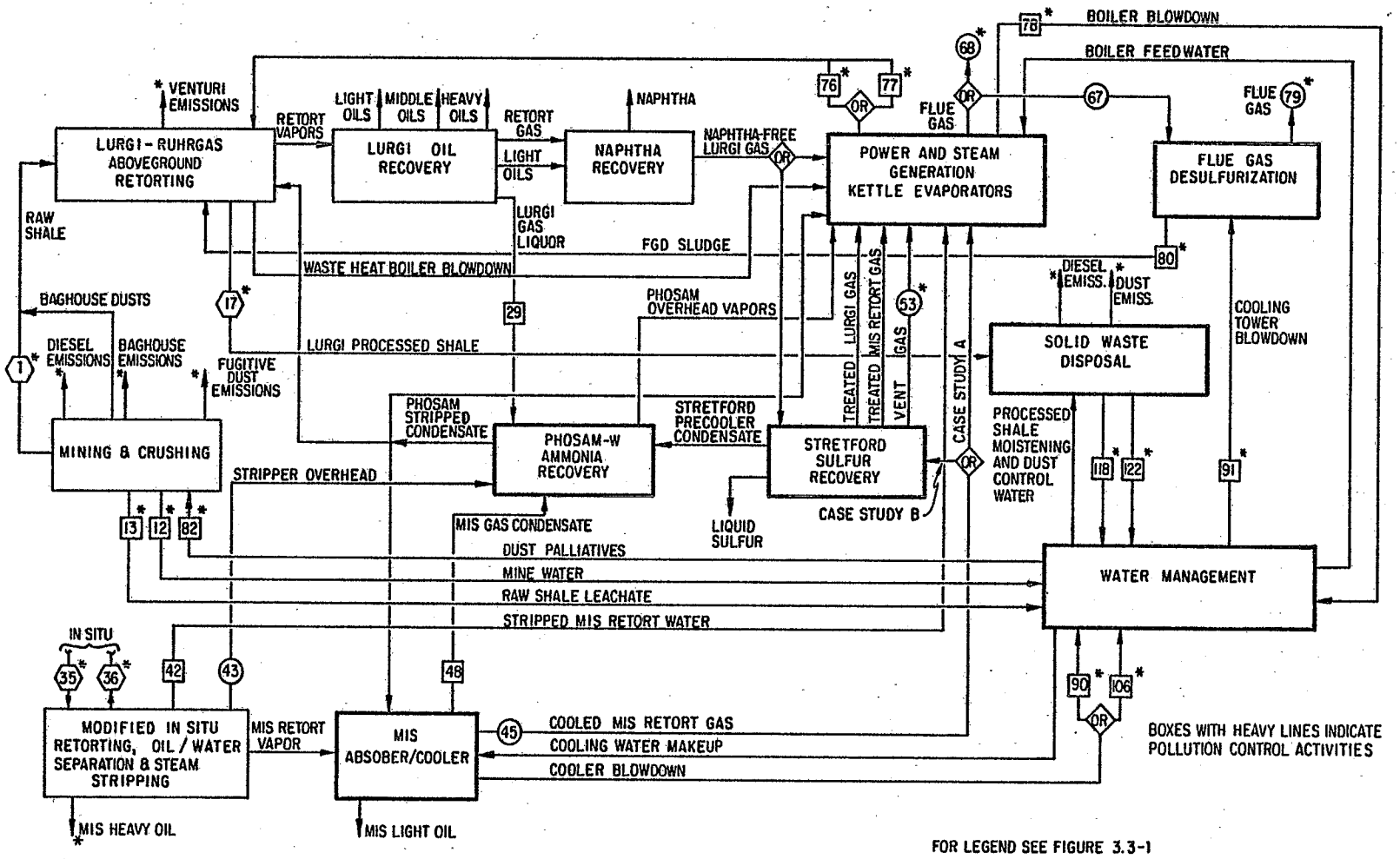

SOURCE: DRI based on Occidental Oil Shale, Inc. and Tenneco Shale Oil Co., April 1981, and Ashland Oil, Inc. and Occidental Oil Shale, Inc., February 1977

FIGURE 3.2-1 PROCESS OPERATIONS AND WASTE STREAMS

sufficient temperature (950-1,000°F) to release a mixture of oil and high-Btu gas which moves to a recovery section of the plant. After retorting, the processed shale contains a carbon residue which is burned in a lift pipe, thereby further raising the temperature of the processed shale (1,200-1,300°F) before it is mixed with the incoming raw shale. Part of the burned processed shale that is not recycled exits with the flue gas and is separated, quenched with water, and moistened to 10% water before disposal. The flue gas is humidified and the residual dust is removed by electrostatic precipitation.

In the Lurgi oil recovery section of the plant, four oil fractions and a high-Btu gas are recovered. This retort gas may then be mixed with the MIS retort gas and burned in a steam boiler (Case Study A) or further treated using the Stretford process before it is burned (Case Study B). A gas liquor, or condensate, is also produced in the oil recovery section and is combined with the MIS gas condensate for recovery of ammonia by the Phosam-W process.

The oil produced by the MIS retorts is collected both in an underground sump and through gas treatment on the surface. A large volume of low-Btu gas is produced during retorting and treated on the surface in the MIS oil recovery section of the plant where water scrubbers are used to cool the gas and condense light oil fractions. In addition, the NH_3 content of the gas is substantially reduced by dissolution in water. The process of cooling and scrubbing the gas produces a gas condensate (water) which is combined with the gas liquor from the Lurgi process for treatment using a Phosam-W process for NH_3 recovery. The combined condensate is used for producing low-quality ("dirty") steam using steam-heated kettle evaporators.

As mentioned earlier, the cooled MIS retort gas may be burned directly in a steam boiler or treated before combustion using the Stretford process. The boiler will produce steam which is used in power drivers for all major pumps and blowers and in generating electricity. In the direct burning of the gas, the flue gas from the steam boiler is desulfurized using a limestone flue gas desulfurizing process. In the case of Stretford treated gas, the flue gas will not require additional cleaning.

During the first 90 days of operating a panel of retorts, a dirty retort water will be generated by moisture condensation in the cool, lower portions of the retorts. As the exit temperature of the gas and oil products increases, however, less of this water will be produced until it disappears altogether. This retort water is steam stripped to remove volatile components and then combined with the gas condensates and used to raise dirty steam using kettle evaporators.

This manual examines two separate integrated plant designs, Case Studies A and B (see Section 2 for a detailed description of each case study), which differ in terms of the pollution controls applied to primary streams. Case Studies A and B use different SO_2 control approaches. The water treatments are basically the same in both cases.

3.3 UNIT PROCESS FLOW DIAGRAMS

This section describes the operation of the MIS-Lurgi plant complex in more detail using flow diagrams for each unit process in the plant. Figures 3.3-1 and 3.3-2 are intended to be used as road maps showing the relationships between the unit process flow diagrams for Case Studies A and B, respectively. Each box (except the product storage boxes) in the figures represents an individual flow diagram, and the appropriate figure number for each diagram is indicated. All streams are numbered as well. A complete list of all the streams, in numerical order, is included in Section 1.7, Table 1.7-1.

The individual, unit process flow diagrams are presented throughout this section (Figures 3.3-3 through 3.3-15); also, Figures 3.3-16 through 3.3-18 provide details on the water management system for the entire plant complex. In each diagram, streams enter on the left and exit on the right, and mass flows are given at the bottom. Composition data on major process and waste streams can be found in Section 4.

3.3.1 Mining, Rubblizing, Crushing, and Transport of Raw Shale

A conceptual flow diagram depicting mining and crushing processes for the MIS-Lurgi oil shale complex is presented in Figure 3.3-3. Initially, room-and-pillar mining will remove approximately 23% of the shale to form a void space for rubblizing the remaining shale to form the MIS retorts. Mine development will include the construction of service shafts to three mining levels, drilling, blasting, crushing, and interim shale ore storage. The blasting operation fragments the shale and distributes it uniformly to occupy the mined out voids. A relatively small particle size (averaging 6 inches) and homogeneous distribution throughout the retort is desirable for an efficient retorting operation. Regions of increased permeability promoting channeling of the gases could result in reductions in overall oil yield (Ricketts, 1980). The mined out shale (stream 1) is conveyed to the surface for subsequent retorting in the Lurgi-Ruhrgas plant. Intermediate preparatory operations include coarse ore storage, primary and secondary crushing to a size of minus 8 inches and minus 1/3 inch, respectively, and fine ore storage. Mining and crushing operations will produce appreciable quantities of airborne particulates. Sufficient ventilation air (stream 3) will be used to maintain dust, machinery exhaust, and explosives fume concentrations in the mine and mine vent emission (stream 4) within safe levels. Transportation of coarse and fine crushed shale between the various processing units will be accomplished with enclosed conveyors to minimize dust emissions. Water and other dust suppressants (stream 82) will also be used to control the fugitive particulates (stream 6) from unconfined sources (e.g., the coarse ore open storage pile, conveyor). Confined dust sources (e.g., crushers, fine ore enclosed storage bin) will be equipped with baghouses for dust control at these points. The raw shale fines (stream 2) collected will be conveyed and fed to the Lurgi retorts along with the crushed shale feed.

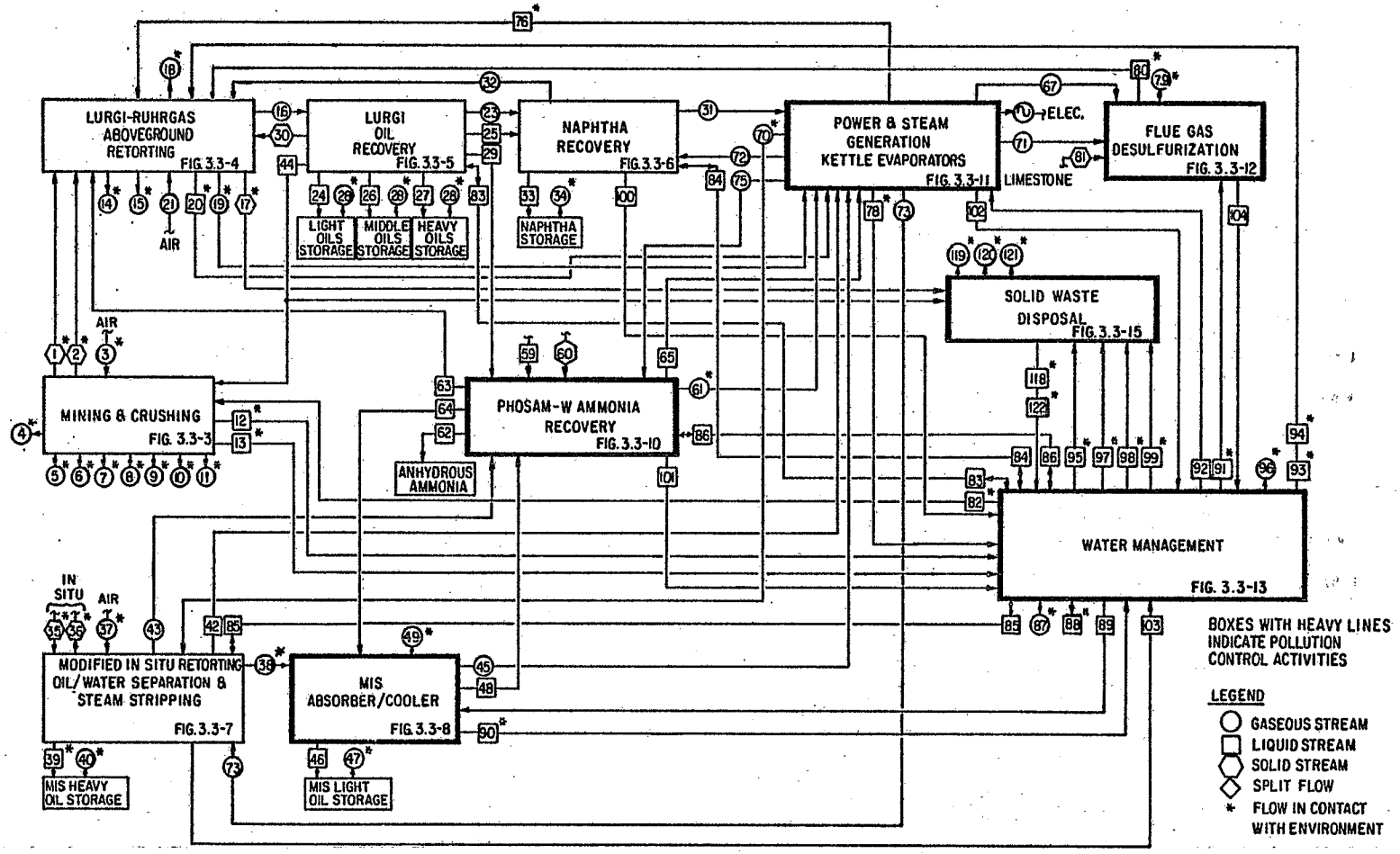

SOURCE: DRI based on Occidental Oil Shale, Inc. and Tenneco Shale Oil Co., April 1981

FIGURE 3.3-1 OVERALL PLANT COMPLEX, CASE STUDY A

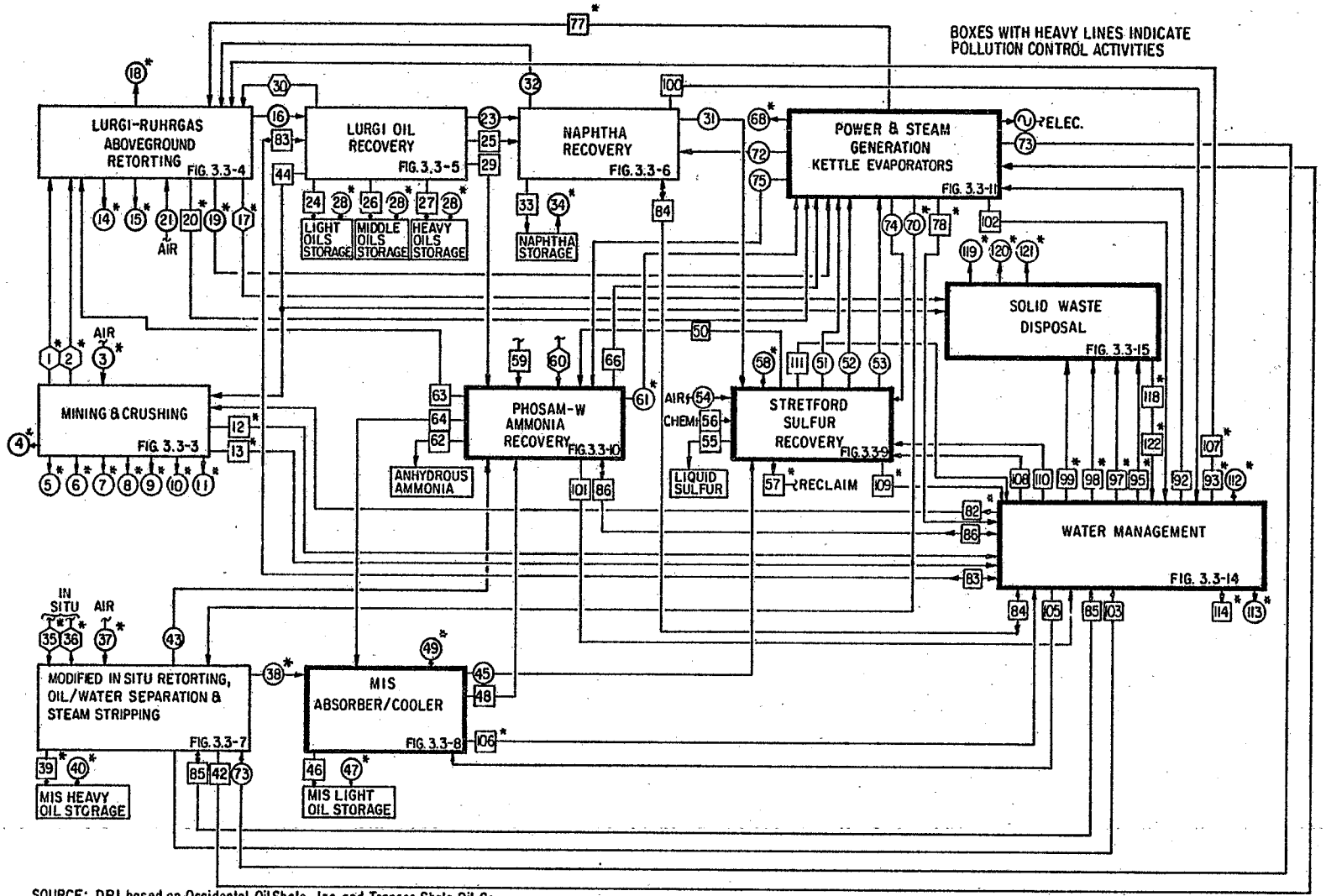

SOURCE: DRI based on Occidental Oil Shale, Inc. and Tenneco Shale Oil Co., April 1981, and Ashland Oil, Inc. and Occidental Oil Shale, Inc., February 1977

FOR LEGEND SEE FIG. 3.3-1

FIGURE 3.3-2 OVERALL PLANT COMPLEX, CASE STUDY B

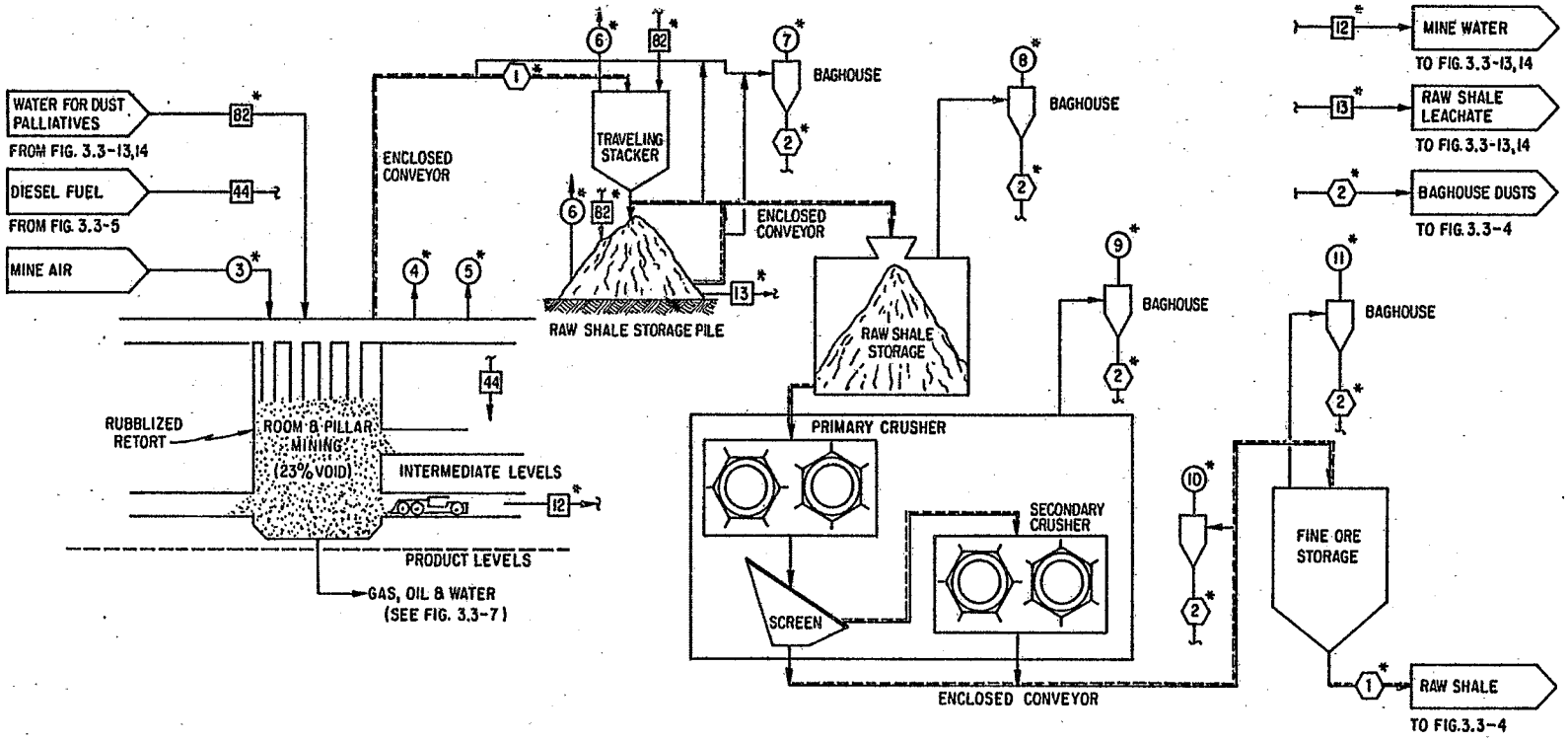

FOR LEGEND SEE FIGURE 3.3-1

STREAM NO.	1*	2*	3*	4*	5*	6*	7*	8*	9*	10*	11*	12*	13*	44	82*
STREAM IDENTITY	RAW SHALE	BAGHOUSE DUSTS	MINE AIR	MINE VENT EMISSION	DIESEL EMISSIONS	FUGITIVE DUST EMISSIONS	BAGHOUSE EMISSIONS: CONVR. TRNSFR. PNT.	RAW SHALE STORAGE	CRUSHING & SCREENING	CONVR. TRNSFR. PNT.	FINE ORE STORAGE	MINE WATER	RAW SHALE LEACHATE	DIESEL FUEL	WATER FOR DUST PALL.
FLOW RATE: 10^3 ACFM, 10^3 lb/hr, gpm	5133	10.9	6400	6400	N.D.	(includes #120,121) 0.12	10 / 2.2 lb/hr	50 / 2.0 lb/hr	142 / 45.0 lb/hr	16 / 5.1 lb/hr	1.2 / 0.8 lb/hr	4276(B) 6142(A)	N.D.	N.D.	329
TEMP, °F	AMB	AMB	AMB	AMB	N.D.	AMB									AMB
PRESSURE, psig	AMB														AMB

SOURCE: DRI based on Occidental Oil Shale, Inc. and Tenneco Shale Oil Co., April 1981

FIGURE 3.3-3 MINING AND CRUSHING

Mine water (stream 12) will be collected in sumps, clarified, and used as required in mine dust control, processed shale moistening, steam generation and other plant services.

3.3.2 Lurgi-Ruhrgas Aboveground Retorting

The Lurgi-Ruhrgas aboveground retorting process is shown in Figure 3.3-4. Raw shale from the secondary crushers (stream 1) and collected dust from the baghouses (stream 2) provide the feed to the screw mixer where pyrolysis occurs. Vapors containing retort gases, oil mist, water vapor, and some processed shale particulates (stream 16) exit the screw mixer and pass through two cyclones. Processed shale particulates are removed in the cyclones and vapors continue on to the oil recovery system.

Processed shale exits the screw mixer into a surge vessel where it combines with particulates captured by the gas stream cyclones. Processed shale is then forced up a lift pipe by injection of preheated air. Oily dust from the oil/dust centrifuge (Figure 3.3-5, stream 30) is also injected into the bottom of the lift pipe. Combustion of residual carbon on processed shale particles and oil from oily dust occurs within the lift pipe, producing flue gas and heat.

Processed shale particles then enter a collecting bin which recycles a predetermined amount of processed hot shale into the retort to provide heat necessary to raise the raw shale feed to pyrolysis temperature. The hot processed shale is mixed with raw shale in the screw mixer in a mass ratio of approximately 6:1 (Marnell, September 1976; Schmalfeld, July 1975).

Hot flue gas and entrained processed shale particles exit the collecting bin and enter a cyclone where most particulates are removed and fed to a processed shale quencher/moisturizer. Hot flue gas then enters a waste heat recovery boiler where the air for incineration in the lift pipe is preheated, followed by the production of steam through heat transfer to the entering stripped condensate from the Phosam-W process (stream 63). Both case studies specify the use of process water in this waste heat recovery boiler to produce dirty steam for injection into MIS retorts.

Hot flue gas continues through another cyclone for further particulate removal and then enters a humidifier and an electrostatic precipitator and is vented to the atmosphere as stream 15. Processed shale quenching and moistening water (streams 93, 94 and/or 107) enters the quencher/moisturizer where the processed shale is cooled to below 200°F and is wetted to contain approximately 10% water by weight. The moisturized processed shale (stream 17) is then sent for disposal. The moisturizing and mixing operations generate additional steam and particulates which are scrubbed in a venturi wet scrubber, and a clean venturi emission (stream 18) is released to the atmosphere.

3.3.3 Lurgi-Ruhrgas Oil Recovery

The Lurgi-Ruhrgas oil recovery system, shown in Figure 3.3-5, has three stages involving two hot oil scrubbers and one cool water scrubber. The oil

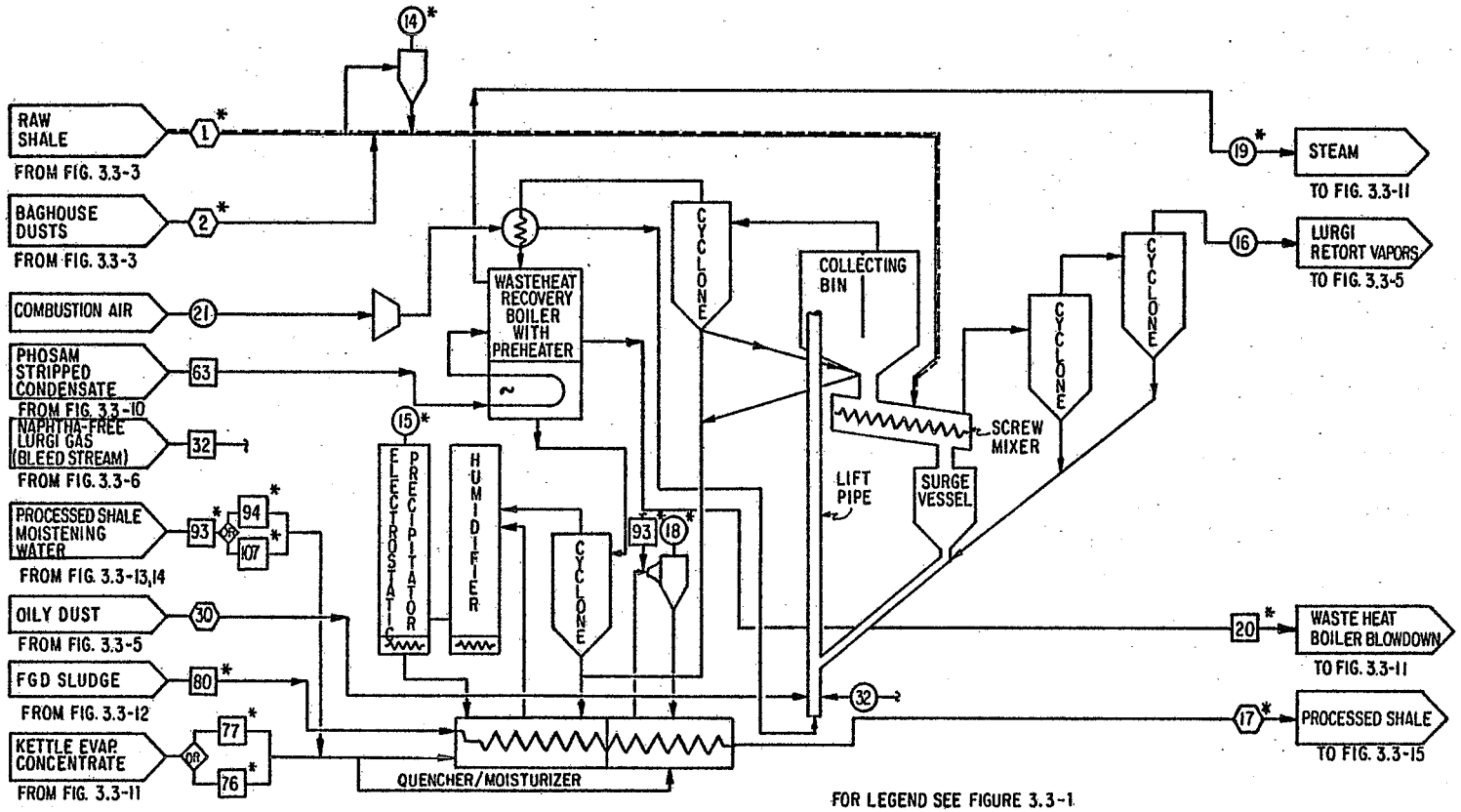

FOR LEGEND SEE FIGURE 3.3-1

STREAM NO.	1*	2*	14*	15*	16	17*	18*	19*	20*	21	30	32	63	76*	77*	80*	93*	94*	107*
STREAM IDENTITY	RAW SHALE	BAGHOUSE DUSTS	FINE ORE LOAD-OUT BAG.EMISS.	LURGI FLUE GAS	LURGI RETORT VAPORS	PROC. SHALE	VENTURI SCRUBBER EMISSION	STEAM	WASTE HT. BOILER BLOWDOWN	COMBUST. AIR	OILY DUST	NAPHTHA-FREE LURGI GAS	PHOSAM STRIPPED COND.	KETTLE EVAPORATOR CONCENTRATE CASE A	KETTLE EVAPORATOR CONCENTRATE CASE B	FGD SLUDGE CASE A	PROCESSED SHALE MOISTENING WATER CASE A, B	PROCESSED SHALE MOISTENING WATER CASE A	PROCESSED SHALE MOISTENING WATER CASE B
FLOW RATE: 10^3ACFM			4	1584			38.6												
10^3lb/hr	5133	10.9	0.1 lb/hr	3471.0	939.2	4343		240.1	70.2	2498	77	N.D.	310.3	184.0	353.5	431.5			
gpm									140				620	353	692	670	191	1008	1339
TEMP.,°F	AMB	AMB	AMB	425	900	200	N.D.	400	N.D.	700	350	N.D.	180	N.D.	N.D.	N.D.	AMB	AMB	AMB
PRESSURE,psig	AMB	AMB	AMB	AMB	N.D.	AMB	AMB	265	AMB	N.D.	AMB	N.D.	6	AMB	AMB	AMB	AMB	AMB	AMB

SOURCE: DRI based on Occidental Oil Shale, Inc. and Tenneco Shale Oil Co., April 1981

FIGURE 3.3-4 LURGI-RUHRGAS RETORTING

recovery system primarily removes oil mists and water vapor from the entering retort vapors (stream 16).

The first oil scrubber removes the heavy oils and particulate material from the gas stream but retains water in the vapor phase due to the high temperature involved. Gas liquor, which is obtained in the latter part of the oil recovery system, is recycled to the scrubber to decrease the temperature of the vapors through water evaporation. Dusty heavy oils exit at the bottom of the scrubber at approximately 350°F and enter a centrifuge for dust/oil separation. A small stream of light oils is a necessary addition to the centrifugation process to thin the highly viscous heavy oils, thereby enabling a more effective separation. Centrifugation can be a two-stage process, coupled with solids drying and light oil stabilization processes (Rio Blanco Oil Shale Co., February 1981). Oily dust (stream 30) recovered through centrifugation is recycled to the Lurgi retort lift pipe. The dust-free heavy oils (stream 27) recovered through centrifugation are pumped to storage. Retort gas exits the first scrubber and passes through a cyclone for removal of oil droplets and particulates before entering the second oil scrubber for middle oils removal.

The second oil scrubber operates similar to the first, affording removal of middle oils from the retort gas. This scrubber operates at a temperature lower than the first, yet above the dew point of the gas so that moisture condensation does not occur; therefore, the middle oils (stream 26) recovered from this unit are free of water and may be pumped directly to storage. The operating temperature for the scrubber is reduced to about 150°F through air cooling.

The third scrubber operates at a temperature low enough to promote condensation of light oil vapors and moisture. This unit recirculates a portion of the condensed oil/water mixture to aid in scrubbing of oil and to promote removal of ammonia. The exit temperature of this scrubber is approximately 90°F. Light oils (stream 24) and gas liquor (stream 29) condensed from this scrubber undergo separation, with light oils being pumped to storage and gas liquor continuing on to ammonia removal by the Phosam-W process (Figure 3.3-10 later in this section). The oil storage tanks will be a source of fugitive hydrocarbon emissions (stream 28).

3.3.4 Lurgi Lean Oil Absorber and Naphtha Stripper

The lean oil absorber and naphtha stripper unit, shown in Figure 3.3-6, fractionates the Lurgi-Ruhrgas retort gas (stream 23) after oil recovery into noncondensable hydrocarbons, such as C_1's, C_2's and C_3's (stream 31), and naphtha (stream 33). This unit is used to absorb the naphtha from the gas into a naphtha-free or lean oil. Noncondensable hydrocarbons are not absorbed in the lean oil and exit the absorber overhead as naphtha-free retort gas (stream 31) for further cleanup and use. Naphtha is then stripped from the naphtha-rich oil and condensed for collection and storage, while the stripped lean oil is recycled to the absorber. Makeup lean oil (stream 25) is obtained, as required, from light oils produced in the oil recovery unit.

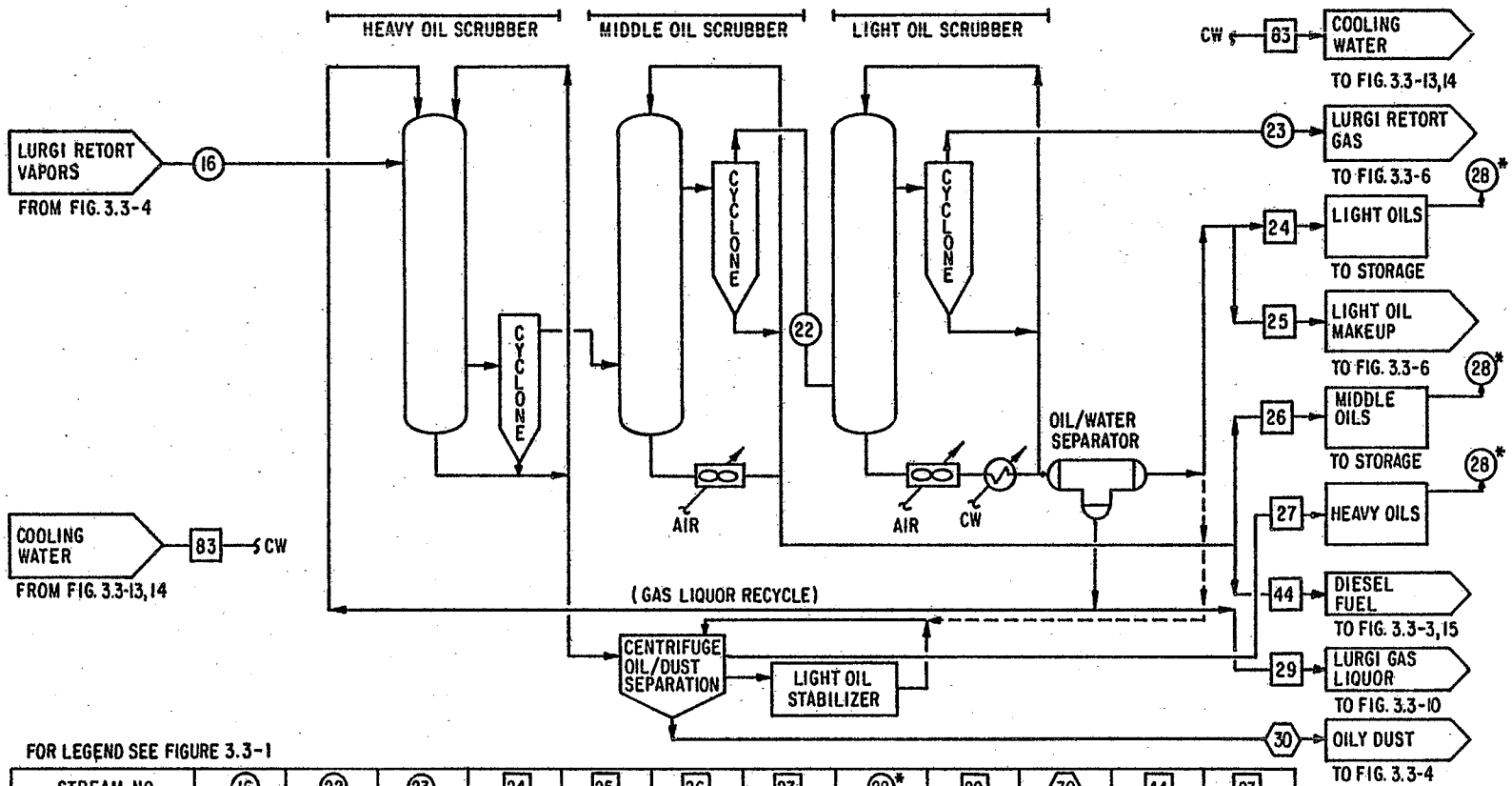

FOR LEGEND SEE FIGURE 3.3-1

STREAM NO.	16	22	23	24	25	26	27	28*	29	30	44	83
STREAM IDENTITY	LURGI RETORT VAPORS	LURGI RAW RETORT GAS	LURGI RETORT GAS	LIGHT OILS	LIGHT OIL MAKEUP	MIDDLE OILS	HEAVY OILS	HC EMISSIONS	LURGI GAS LIQUOR	OILY DUST	DIESEL FUEL	COOLING WATER
FLOW RATE: 10^3 ACFM								(includes # 34,40,47)				
10^3 lb/hr	939.2	491.5	188.0	136.4	N.D.	302.9	144.7	0.1	167.2	77	N.D.	
gpm				299		690	306		324			N.D.
TEMP., °F	900	150	95	95	95	150	350	AMB	95	350	150	AMB
PRESSURE, psig	N.D.	N.D.	N.D.	AMB								AMB

SOURCE: DRI based on Rio Blanco Oil Shale Co., February 1981

FIGURE 3.3-5 LURGI-RUHRGAS OIL RECOVERY

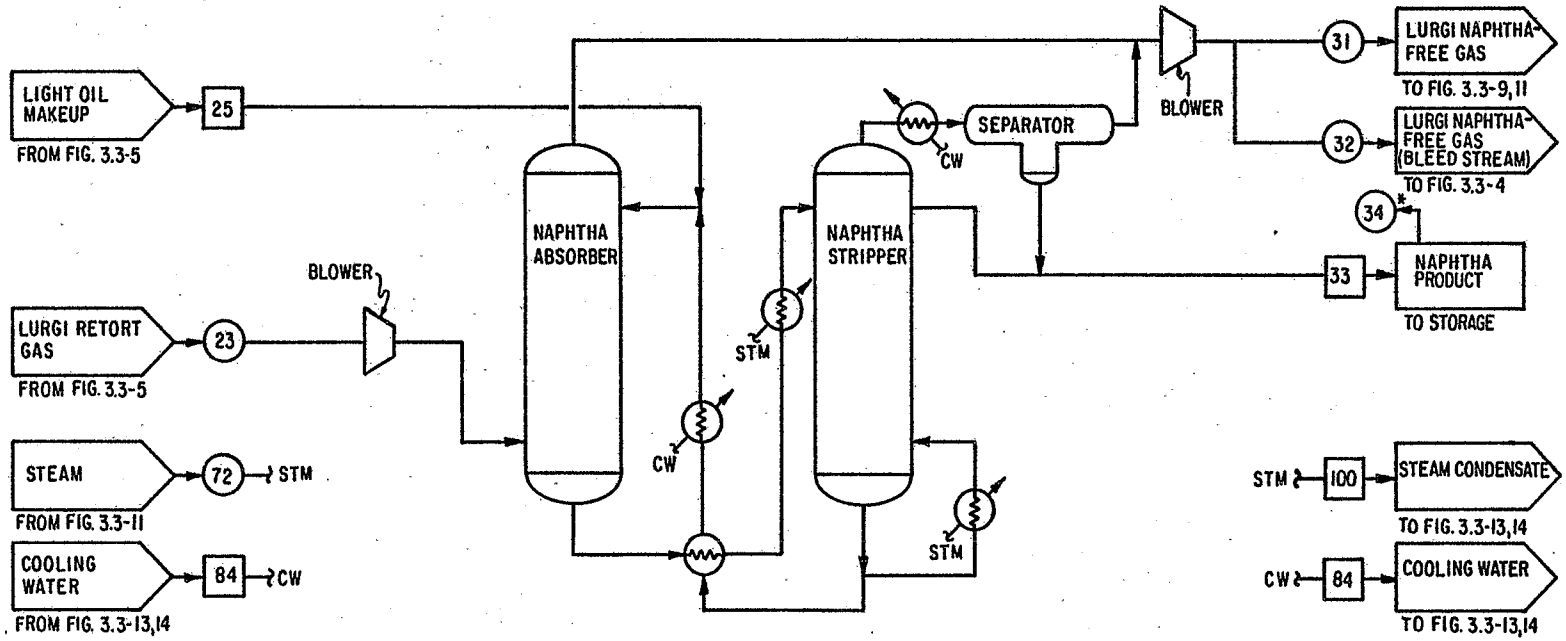

FOR LEGEND SEE FIGURE 3.3-1

STREAM NO.	23	25	31	32	33	34*	72	84	100
STREAM IDENTITY	LURGI RETORT GAS	LIGHT OIL MAKEUP	LURGI NAPHTHA-FREE GAS	LURGI NAPHTHA-FREE GAS (BLEED STREAM)	NAPHTHA PRODUCT	NAPHTHA STORAGE HC EMISSION	STEAM	COOLING WATER	STEAM CONDENSATE
FLOW RATE: 10^3 ACFM						(included in #28)			
10^3 lb/hr	188.0	N.D.	153.6	N.D.	34.4	N.D.	N.D.		
gpm					105			N.D.	N.D.
TEMP., °F	95	95	N.D.	N.D.	N.D.	AMB	300	AMB	120
PRESSURE, psig	AMB	AMB	N.D.	N.D.	N.D.	AMB	85	AMB	AMB

SOURCE: DRI based on Rio Blanco Oil Shale Co., February 1981

FIGURE 3.3-6 LURGI NAPHTHA ABSORBER/NAPHTHA STRIPPER

3.3.5 MIS Retorting and Oil/Water Separation

Figure 3.3-7 presents a conceptual illustration of a rubblized MIS retort. The dimensions of this (smaller) retort, containing 23% void space, are approximately 165 feet by 165 feet by 290 feet. This retort volume contains approximately 420,000 tons of rubblized shale.

In the operation of an MIS retort, air and steam (streams 37 and 70) are admitted at the top through several openings which connect the retort air level to the top of the rubblized shale (Ralph M. Parsons Co., March 1979). The steam is produced from process waters, using kettle evaporators and Lurgi waste heat recovery boilers. Steam promotes the water/gas reaction and provides a means of controlling the combustion zone temperature. Retort start-up is accomplished through introduction of hot inert gas. When the temperature of the broken rock at the top of the retort is high enough, air is introduced to initiate combustion. An operating retort contains four major zones. In the first, or preheat zone, the air/steam feed gas is preheated through contact with hot processed shale. The heated gas then reaches a combustion zone where oxygen is consumed by burning residual carbon in the processed shale. Below the combustion zone is the retorting zone where hot combustion gases heat the raw shale rubble to approximately 900°F, and the retorting process commences. During retorting, the kerogen is pyrolyzed to produce gas, oil and oil vapor, and solid residue with residual carbon. The shale oil moves downward by gravity and precedes the advancing combustion front by six to ten feet. In the final zone, the combustion and retorting gases are cooled as they flow downward, condensing most of the vaporized oil. During the early stages of the burn, when the rock is still cool, some water is also condensed.

Oil, water, and retort gas exit the bottom of the MIS retort and undergo separation in a three-phase separation sump located underground. Heavy oils (stream 39) obtained from this sump are pumped to storage. The retort water (stream 41) is also pumped to the surface and steam stripped to remove volatile compounds. The overhead vapors (stream 43) are sent to the Phosam-W unit, while the stripped water is used in the production of low-quality steam to be injected back into the MIS retorts. The retort gas mixture (stream 38) consists of light hydrocarbons from shale pyrolysis, carbon dioxide and water vapor from the combustion of carbonaceous residue, water vapor from steam injection, carbon dioxide from the decomposition of inorganic carbonate (primarily dolomite and calcite), and nitrogen from the combustion air. In addition, the gas contains ammonia and sulfur-bearing gaseous products such as H_2S and COS. The gases are drawn to the surface by large blowers and fed to an absorption/cooling oil recovery unit.

3.3.6 MIS Absorber/Cooler

The MIS absorber/cooler, presented in Figure 3.3-8, is a five-stage absorber which condenses light oils and ammonia-containing water from the MIS retort gas. Humidified air coolers are incorporated on recycle lines of all stages to control temperatures. Oil and water exit the lower portions of the column and undergo separation in an external separating vessel; the light oils (stream 46) are pumped to storage and the foul water, called MIS gas

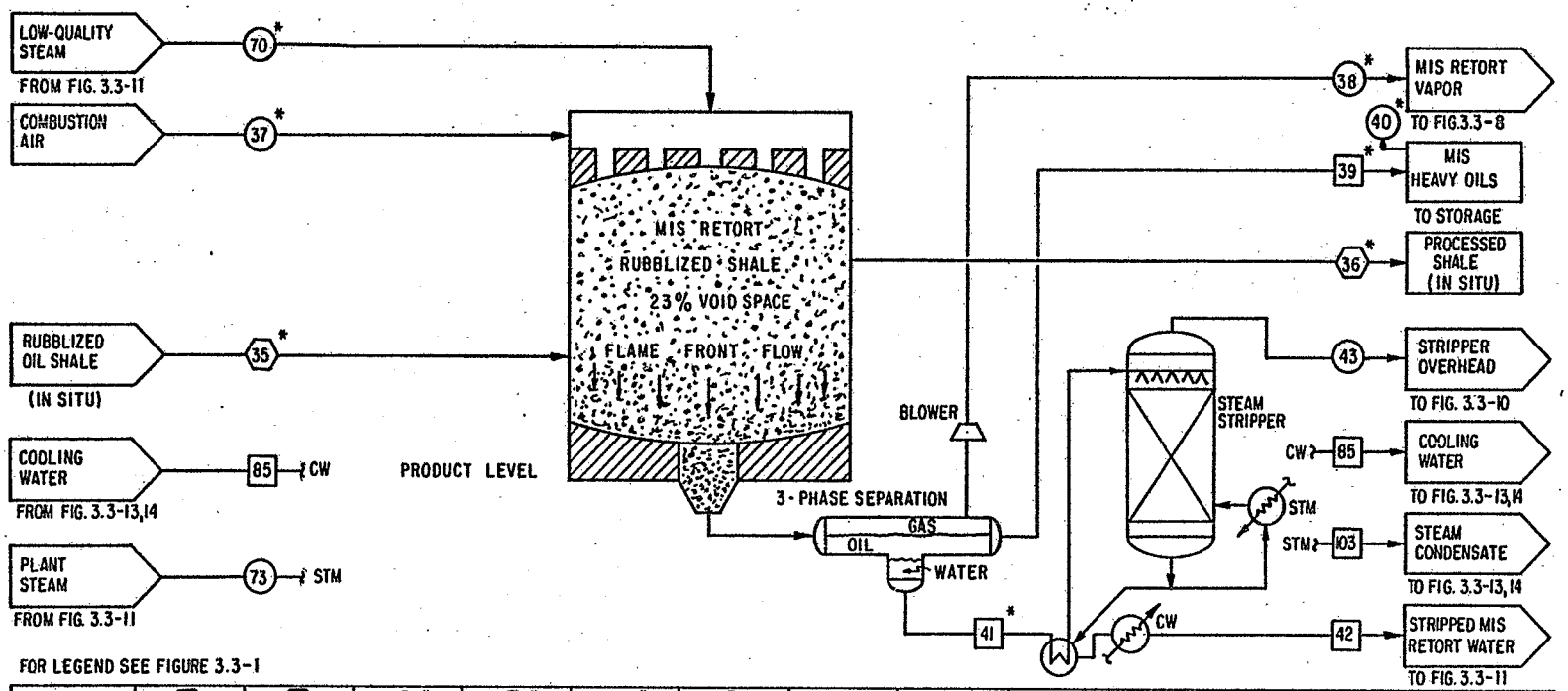

FOR LEGEND SEE FIGURE 3.3-1

STREAM NO.	35*	36*	37*	38*	39*	40*	41*	42	43	70*	73	85	103
STREAM IDENTITY	RUBBLIZED OIL SHALE (IN SITU)	PROCESSED SHALE (IN SITU)	COMBUSTION AIR	MIS RETORT VAPOR	MIS HEAVY OILS	MIS OIL STORAGE HC EMISSION	MIS RETORT WATER	STRIPPED MIS RETORT WATER	STRIPPER OVERHEAD	LOW-QUALITY STEAM	PLANT STEAM	COOLING WATER	STEAM CONDENSATE
FLOW RATE: 10^3ACFM 10^3lb/hr gpm	15,083	11,421	6508	4470 10,998.3	911 1810	(included in #28) N.D.	611.5 1200(AV.)	513.9 1013(AV.)	97.6	1511.3	90	N.D.	180
TEMP., °F	AMB	N.D.	AMB	150	150	AMB	150	135	200	400	300	AMB	120
PRESSURE, psig	AMB ←								→ AMB	265	85	AMB	AMB

SOURCE: DRI based on Occidental Oil Shale, Inc. and Tenneco Shale Oil Co., April 1981

FIGURE 3.3.7 MIS RETORTING, OIL/WATER SEPARATION AND STEAM STRIPPING

condensate (stream 48), continues on to a Phosam-W ammonia recovery unit. A portion of treated water from the Phosam-W unit, termed stripped condensate (stream 64), is recycled and sprayed into upper portions of the absorber/cooler to promote scrubbing of ammonia from the MIS retort gas. The MIS retort gas is compressed (stream 45) after passing through the absorber/cooler and is sent either to the steam boilers (Case Study A) or to the Stretford sulfur recovery plant via a humidified air cooler (Case Study B). Further cooling of the Stretford-bound gas produces a small quantity of condensate (stream 50) which joins the larger amount of MIS gas condensate produced earlier.

3.3.7 Stretford Sulfur Process (Case Study B)

A flow diagram for the Stretford process is shown in Figure 3.3-9. This process affords simultaneous removal and recovery of hydrogen sulfide from the gaseous feeds containing low amounts of H_2S. High concentrations of H_2S as well as CO_2 are detrimental to the efficiency of the process.

The Stretford process includes two separate absorbers, one each for the Lurgi retort gas (stream 31) and the MIS retort gas (stream 45), with a single solution regeneration and sulfur recovery system. The Stretford solution consists of a buffered solution of sodium carbonates, anthraquinone disulfonic acid (ADA), and sodium vanadate which, in effect, oxidize H_2S to elemental sulfur. The reactants are regenerated by stripping and oxidizing with air, then are recycled.

The gas streams are introduced into the absorbers through venturi inlets under the solution level. By reacting with vanadate in the presence of ADA, H_2S is converted to elemental sulfur, which then floats to the surface and is skimmed off in the oxidizer. After filtering and melting, the sulfur product (stream 55) is taken to storage. The treated gases (streams 51 and 52) are used as plant fuels.

Stripping air is purged through the Stretford solution in the oxidizer tank to regenerate the ADA. The oxidizer vent gas, containing the stripping air with some desorbed materials (stream 53), is then burned in the steam boilers along with the fuel gases. The regenerated solution is recycled to the absorbers. Some nonregenerable compounds like thiosulfates form during the solution regeneration. These are removed periodically as part of the spent liquor (stream 57), which is sent for reclaim.

The Stretford process selectively removes H_2S, but it does not remove significant amounts of other sulfur compounds such as COS, RSH and CS_2. Some of these compounds are partially absorbed in the solution but are desorbed again during stripping. These compounds eventually end up as SO_2 in the flue gas from the steam boilers.

3.3.8 Phosam-W Ammonia Recovery Process

A schematic flow diagram for the Phosam-W ammonia recovery process is presented in Figure 3.3-10. This unit treats the combined ammoniacal gas condensates, or sour water (streams 29 and 48), from the Lurgi and MIS

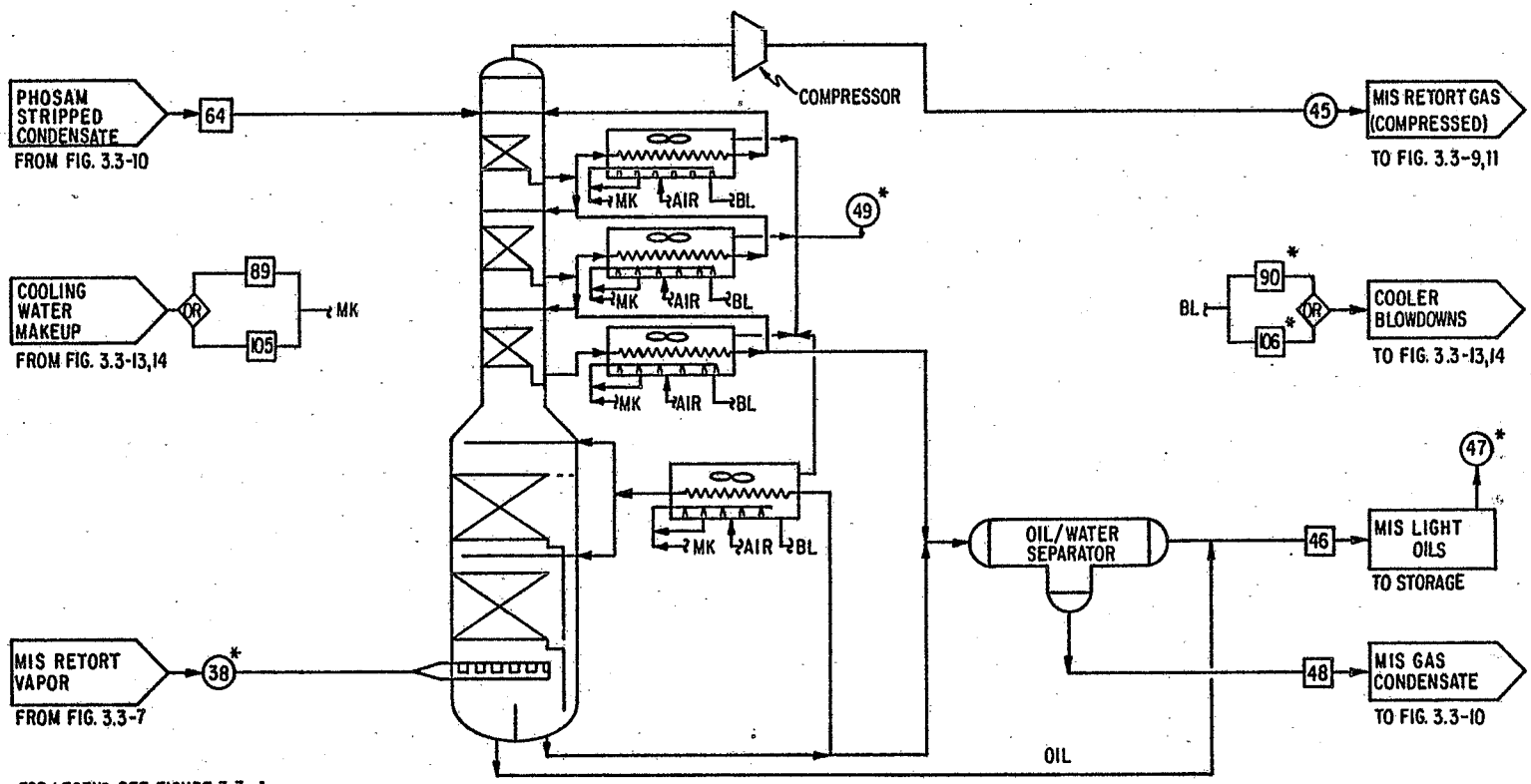

FOR LEGEND SEE FIGURE 3.3-1

STREAM NO.	38*	45	46	47*	48	49*	64	89	105	90*	106*
STREAM IDENTITY	MIS RETORT VAPOR	MIS RETORT GAS	MIS LIGHT OILS	MIS LIGHT OIL STORAGE HC EMISSION	MIS GAS CONDENSATE	COOLING WATER EVAPORATION	PHOSAM STRIPPED CONDENSATE	COOLING WATER MAKEUP MIS COOLER		COOLER BLOWDOWNS	
								CASE A	CASE B	CASE A	CASE B
FLOW RATE: 10^3ACFM	4470	960		(included in # 28)			1248.1(B)				
10^3lb/hr	10,998.3	9023.0	57.5	N.D.	1919.9	530.5	1250.0(A)				
gpm			203		3716(AV.)		2494	3110	1811	2038	739
TEMP., °F	150	225	108	AMB	108	AMB	180	AMB	AMB	AMB	AMB
PRESSURE, psig	AMB	28	145	AMB	145	AMB	6	AMB	AMB	AMB	AMB

SOURCE: DRI based on Occidental Oil Shale, Inc. and Tenneco Shale Oil Co., April 1981

FIGURE 3.3-8 MIS ABSORBER/COOLER

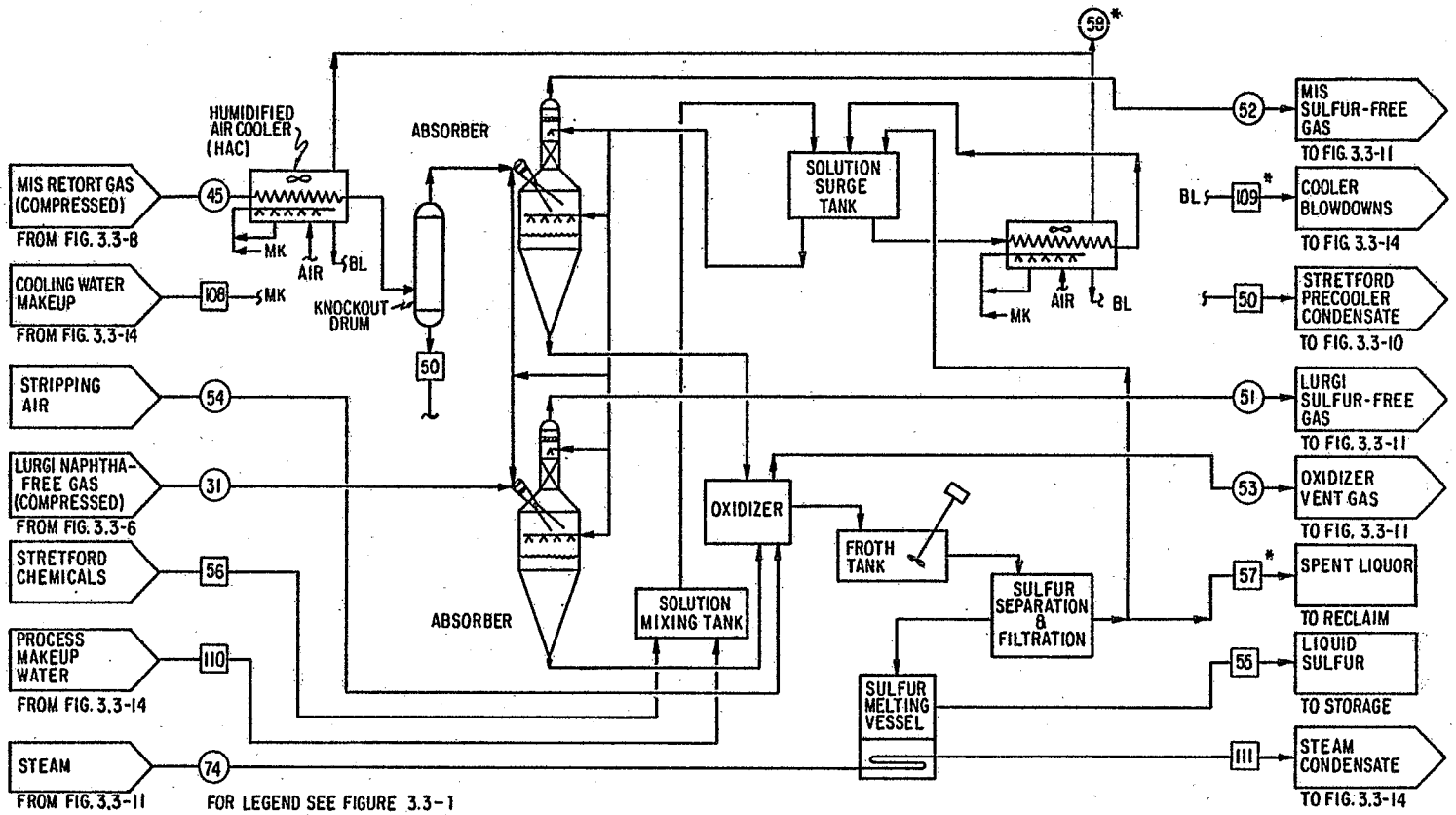

STREAM NO.	31	45	50	51	52	53	54	55	56	57*	58*	74	108	109*	110	111
STREAM IDENTITY	LURGI NAPHTHA-FREE GAS	MIS RETORT GAS	STRETFORD PRECOOLER CONDENSATE	LURGI SULFUR-FREE GAS	MIS SULFUR-FREE GAS	OXIDIZER VENT GAS	STRIPPING AIR	LIQUID SULFUR	STRETFORD CHEMICALS	SPENT LIQUOR	COOLING WATER EVAPORAT.	STEAM	COOLING WATER MAKEUP	COOLER BLOWDOWN	PROCESS MAKEUP WATER	STEAM COND.
FLOW RATE: 10^3 ACFM		960		30	1630											
10^3 lb/hr	153.6	9023.0	168.7	148.4	8641.0	708.7	497.7	16.6	0.65		14	19				
gpm			331							N.D			48	20	71	38
TEMP., °F	N.D.	225	95	95	95	AMB	AMB	N.D.	AMB	AMB	AMB	300	AMB	AMB	AMB	120
PRESSURE, psig	N.D.	28	AMB	5	5	AMB	AMB	AMB	AMB	AMB	AMB	85	AMB	AMB	AMB	AMB

SOURCE: DRI based on Peabody Process Systems, Inc., February 1981

FIGURE 3.3-9 STRETFORD SULFUR RECOVERY, CASE STUDY B

processes, respectively, for recovery of anhydrous ammonia. In addition, it receives the MIS retort water stripper overhead vapors (stream 43).

The Phosam-W unit consists of a water stripper, an ammonia absorber, an ammonia stripper, and an ammonia concentrator or boiler. The sour water feed is introduced to the water stripper in which the dissolved ammonia and other volatile matter are evolved by steam stripping the water. Sodium hydroxide may be added to the aqueous charge to facilitate release of fixed ammonia. The stripped water is sent to the MIS retort gas absorber/cooler (stream 64), the kettle evaporators (streams 65 or 66), and Lurgi waste heat recovery boilers (stream 63).

In the ammonia absorber, the ammonia in the released gases from the sour water and retort water stripper overhead (stream 43) is absorbed out of the vapor phase in a phosphoric acid solution. A solution stoichiometry between monoammonium phosphate and diammonium phosphate is maintained for efficient absorption of ammonia. Unabsorbed gases such as H_2S and CO_2 continue on, as the ammonia recovery unit overhead vapors (stream 61), to be incinerated in the steam boilers.

Desorption of the ammonia from the ammonium phosphate solution takes place in the ammonia stripper section. Both temperature and pressure are increased and steam is passed through the solution. An aqueous solution of 10-20% ammonia is condensed overhead, while the stripped or lean solution is recycled to the absorption section. Ammonia is then obtained in an anhydrous state (stream 62) in the distillation section by steam stripping the aqueous ammonia solution and fractionating the vapors.

3.3.9 Power and Steam Generation

Figure 3.3-11 illustrates the basic boiler types used for production of steam and electric power. A general description of stream flows is presented below.

In Case Study A, Lurgi naphtha-free gas (stream 31) and MIS retort gas (stream 45) are burned in steam boilers, producing 600 psig steam. Flue gas from these boilers (stream 67) undergoes flue gas desulfurization before emission to the atmosphere (stream 79). Overhead vapors from the Phosam-W unit (stream 61) are also burned in these boilers and eventually scrubbed by FGD before being emitted to the atmosphere.

Feedwater to the steam boilers comes from several sources. Softened, clarified mine water (stream 12) is the major source of boiler feedwater. Additional sources include steam condensate returns from various process units.

The high pressure steam (600 psig) is routed in two paths. One path leads to generation of electric power through use of a steam turbine coupled with a generator. Low pressure plant steam (85 psig) is obtained in addition to the electrical power produced by this turbine. The 600 psig steam is also used to operate turbine drivers to perform work at various processing locations of the plant. These turbine drivers reduce high pressure steam to

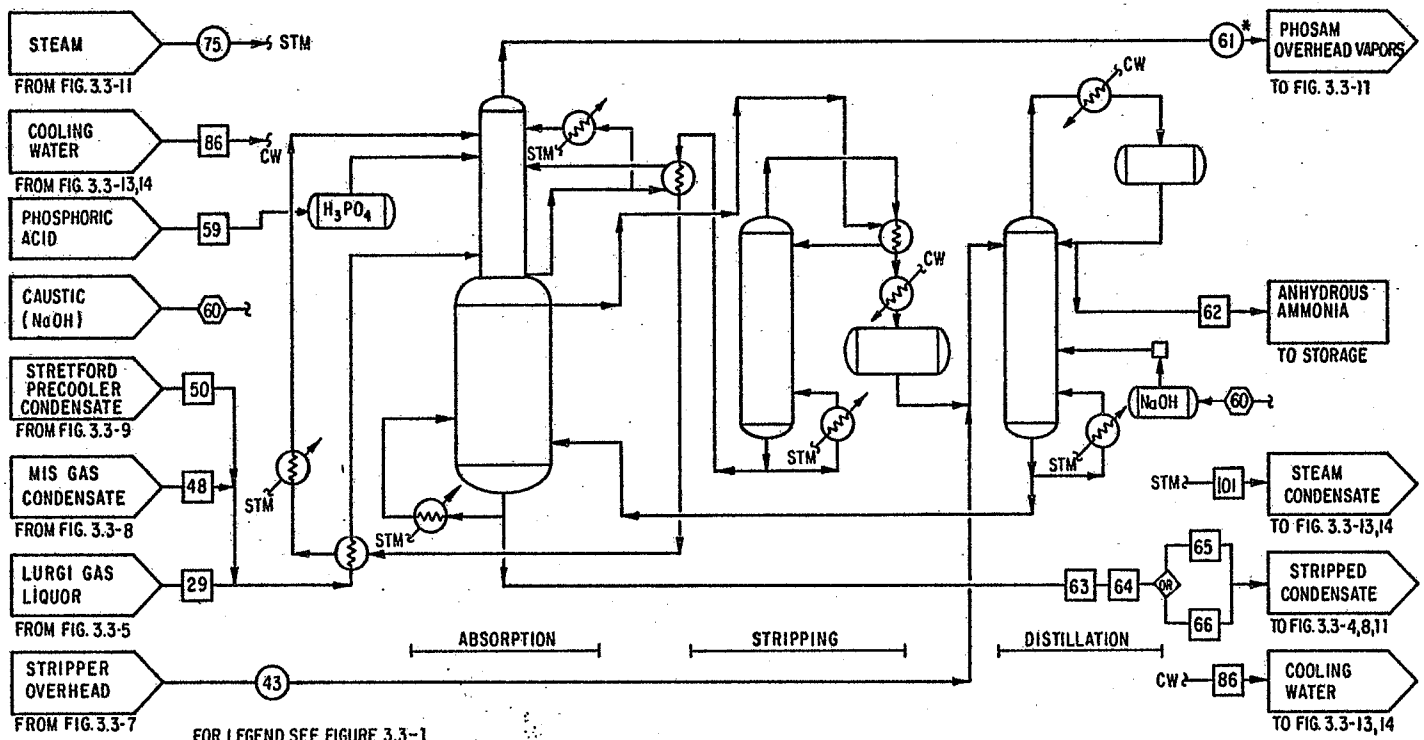

FOR LEGEND SEE FIGURE 3.3-1

STREAM NO.	29	43	48	50	59	60	61*	62	63	64	65	66	75	86	101
STREAM IDENTITY	LURGI GAS LIQUOR	STRIPPER OVERHEAD	MIS GAS CONDENSATE	STRETFORD PRECOOLER CONDENSATE	PHOSPHORIC ACID	CAUSTIC (NaOH)	PHOSAM OVERHEAD VAPORS	ANHYDROUS AMMONIA	PHOSAM STRIPPED CONDENSATE		CASE A	CASE B	STEAM	COOLING WATER	STEAM CONDENSATE
FLOW RATE: 10^3 ACFM															
10^3 lb/hr	167.2	97.6	1919.9	168.7	0.05	0.1	86.4(A) 84.5(B)	27.7(A) 28.6(B)	310.3	1250.0(A) 1248.1(B)	1760.3	1929.8	476		
gpm	324		3716(AV.)	331					620	2494	3517	3856		N.D.	952
TEMP., °F	95	200	108	95	AMB	AMB	210	AMB	180	180	180	180	300	AMB	120
PRESSURE, psig	AMB	AMB	145	AMB	AMB	AMB	3	AMB	6	6	6	6	85	AMB	AMB

SOURCE: DRI based on U.S.S. Engineers and Consultants, Inc., April 1978

FIGURE 3.3-10 PHOSAM-W AMMONIA RECOVERY UNIT

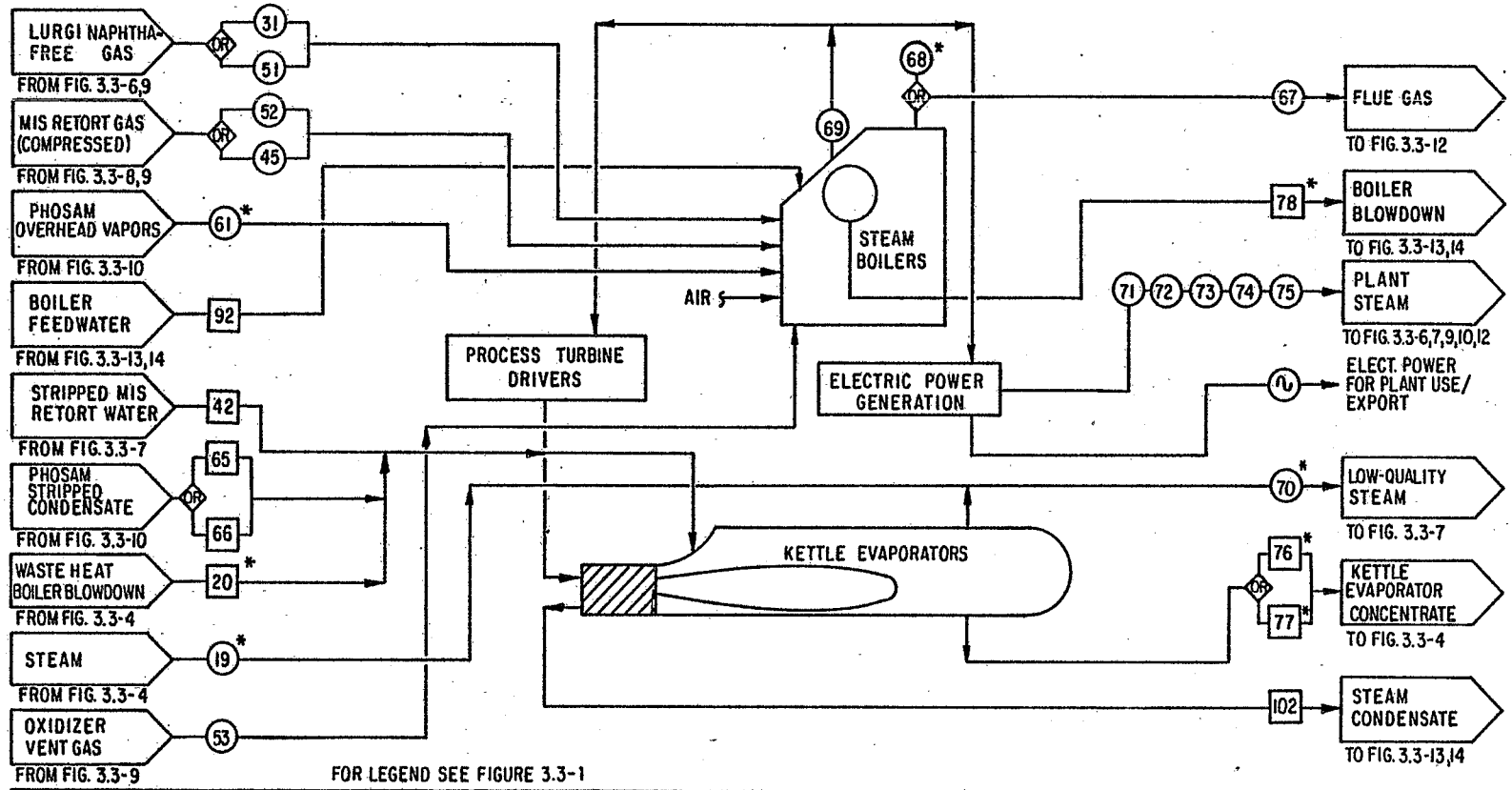

FOR LEGEND SEE FIGURE 3.3-1

STREAM NO.	19*	20*	31	42	45	51	52	53	61*	65 66	67	68*	69	70*	71	72	73	74	75	76*	77*	78*	92	102
STREAM IDENTITY	STEAM	WASTE HEAT BOILER BLWDN.	LURGI NAPHTHA FREE GAS(A)	STRIPP. MIS RETORT WATER	MIS RETORT GAS (A)	LURGI RETORT GAS (B)	MIS RETORT GAS (B)	OXID. VENT GAS (B)	PHOSAM O.H. VAPORS	PHOSAM STRIPP. COND.	FLUE GAS (A)	FLUE GAS (B)	HIGH PRESS. STEAM	LOW-QUAL. STEAM	← PLANT STEAM → (A)			(B)		KETTLE EVAPORATOR CONCENTRAT (A)	(B)	BOILER BLOW-DOWN	BOILER FEED-WATER	STEAM COND.
FLOW RATE: 10^3ACFM																								
10^3lb/hr	240.1	70.2	153.6	513.9	960	30	1630	708.7	864(A)	3517(A)	7620													
gpm		140		1013	9023.0	148.4	8641.0		84.5(B)	3856(B)	17,782.6	17,431.3	7286	1511.3	N.D.	N.D.	90	19	476	184.0 353	353.5 692	146(A) 144(B)	292(A) 287(B)	5514
TEMP., °F	400	N.D.	N.D.	135	225	95	95	AMB	210	180	400	400	485	400	300	300	300	300	300	N.D.	N.D.	N.D.	AMB	120
PRESS., psig	265	N.D.	N.D.	AMB	28	5	5	AMB	3	6	AMB	AMB	600	265	85	85	85	85	85	AMB	AMB	AMB	AMB	AMB

SOURCE: DRI based on Occidental Oil Shale, Inc. and Tenneco Shale Oil Co., April 1981

FIGURE 3.3-11 POWER AND STEAM GENERATION, KETTLE EVAPORATORS

300 psig steam, which is then used as the heat source to drive the kettle evaporators.

The kettle evaporators use steam stripped MIS retort water (stream 42), Phosam-W stripped condensate (stream 65), and Lurgi waste heat boiler blowdown (stream 20) as feedwater to produce lower pressure (265 psig), low-quality, or dirty steam for injection into MIS retorts. The kettle evaporator concentrate, or blowdown (stream 76 or 77), with high TDS is used for processed shale moistening. The Lurgi retort waste heat recovery boiler also produces dirty steam (stream 19) using low-quality feedwater.

Power and steam generation for Case Study B is very similar to that of Case Study A. Steam and power production occur by the means discussed above. The only difference between the two case studies is in the composition of gases which fuel the steam boilers. Steam boilers in Case Study B are fueled by low sulfur Lurgi and MIS retort gases (streams 51 and 52) coming from the Stretford sulfur recovery plant. Since most of the sulfur in the gases has been removed before combustion, the resulting flue gases are emitted to the atmosphere (stream 68) without further control.

3.3.10 Flue Gas Desulfurization (Case Study A)

A schematic for the flue gas desulfurization (FGD) process is shown in Figure 3.3-12. The FGD approach chosen is limestone slurry scrubbing of the sulfur dioxide contained in the flue gas from the steam boilers (stream 67). Limestone (stream 81) is first crushed, then mixed with water and sprayed into scrubbing towers countercurrent to the flue gas flow. The sulfur dioxide in the flue gas reacts with the limestone, resulting in the formation of a sludge which is collected in the clarifier (stream 80) and sent to the Lurgi processed shale moisturizer for mixing with and moistening of the processed shale. The limestone sludge contains approximately 80% water and 20% solids. Flue gas exiting the top of the scrubbing tower is heated via addition of hot air to prevent condensation of moisture and then emitted to the atmosphere (stream 79).

3.3.11 Water Management Schemes

The water management plans for the MIS-Lurgi plant complex are presented in Figures 3.3-13 and 3.3-14. Groundwater collected from the mining operation is clarified prior to use or further treatment. Clarified mine water is the source of sanitary/potable water (stream 115), fire and service water (stream 116), and process makeup water (stream 110). Before use in the cooling tower, water is treated to retard biological growth and minimize scaling. Boiler feedwater is softened in a conventional zeolite system to avoid scaling the boilers. Treated process waters from the plant, blowdowns, and concentrates are recycled to appropriate uses. The equalization basin serves as a source of water for processed shale moistening (stream 94 or 107). Sanitary wastes are treated by conventional biological processes; the effluent (stream 98) is then used for processed shale dust control. Biological sludge (stream 99) is sent to the solid waste disposal area and used in revegetation.

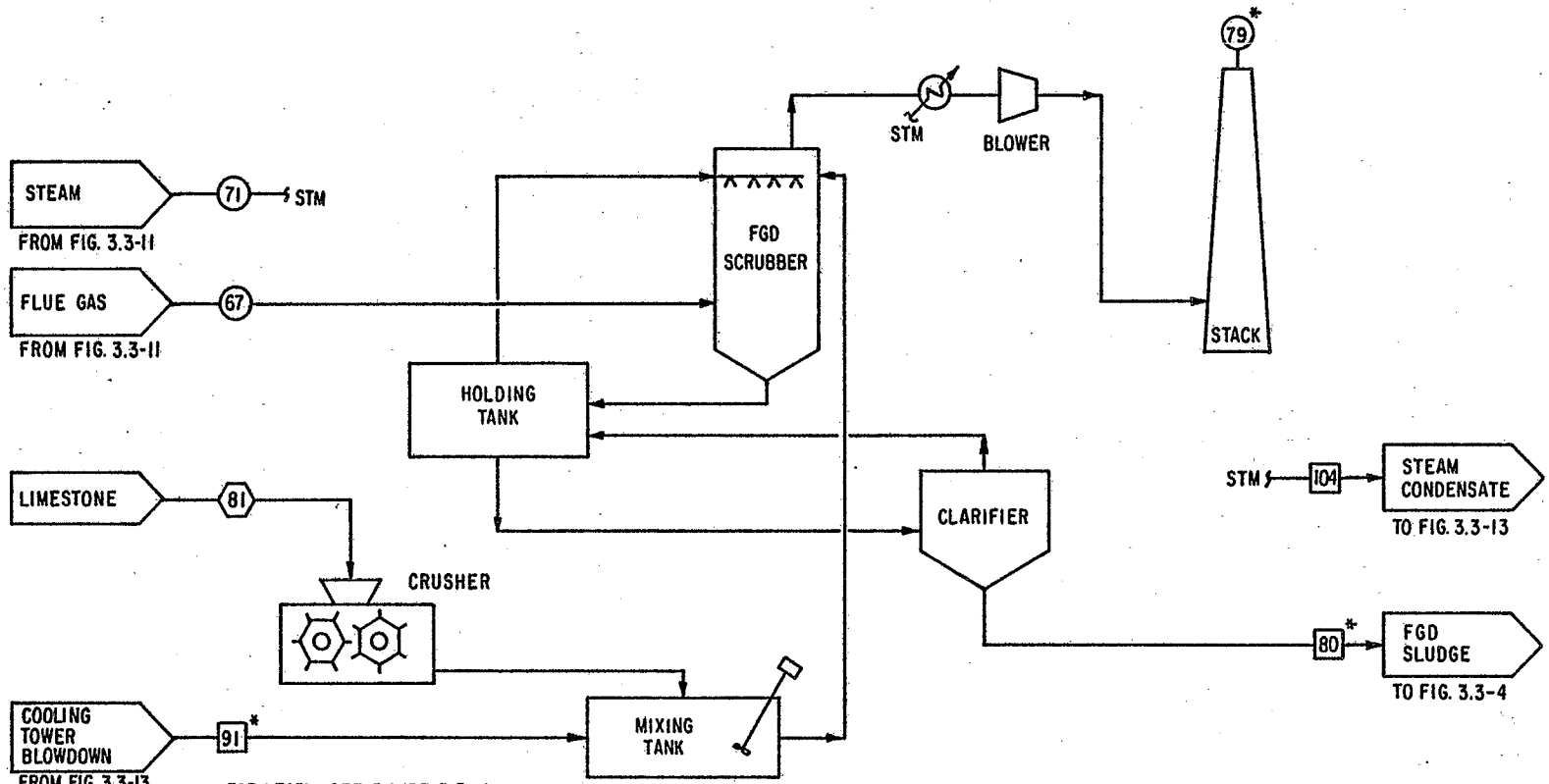

FOR LEGEND SEE FIGURE 3.3-1

STREAM NO.	67	71	79*	80*	81	91*	104
STREAM IDENTITY	FLUE GAS	STEAM	FLUE GAS EMISSION	FGD SLUDGE	LIMESTONE	COOLING TOWER BLOWDOWN	STEAM CONDENSATE
FLOW RATE: 10^3 ACFM	7620		6300				
10^3 lb/hr	17,782.6	N.D.	18,521.2	431.5	62.6		
gpm				670		913	N.D.
TEMP, °F	400	300	163	N.D.	AMB	AMB	120
PRESSURE, psig	AMB	85	AMB	AMB	AMB	AMB	N.D.

SOURCE: DRI based on Occidental Oil Shale, Inc. and Tenneco Shale Oil Co., April 1981

FIGURE 3.3-12 FLUE GAS DESULFURIZATION, CASE STUDY A

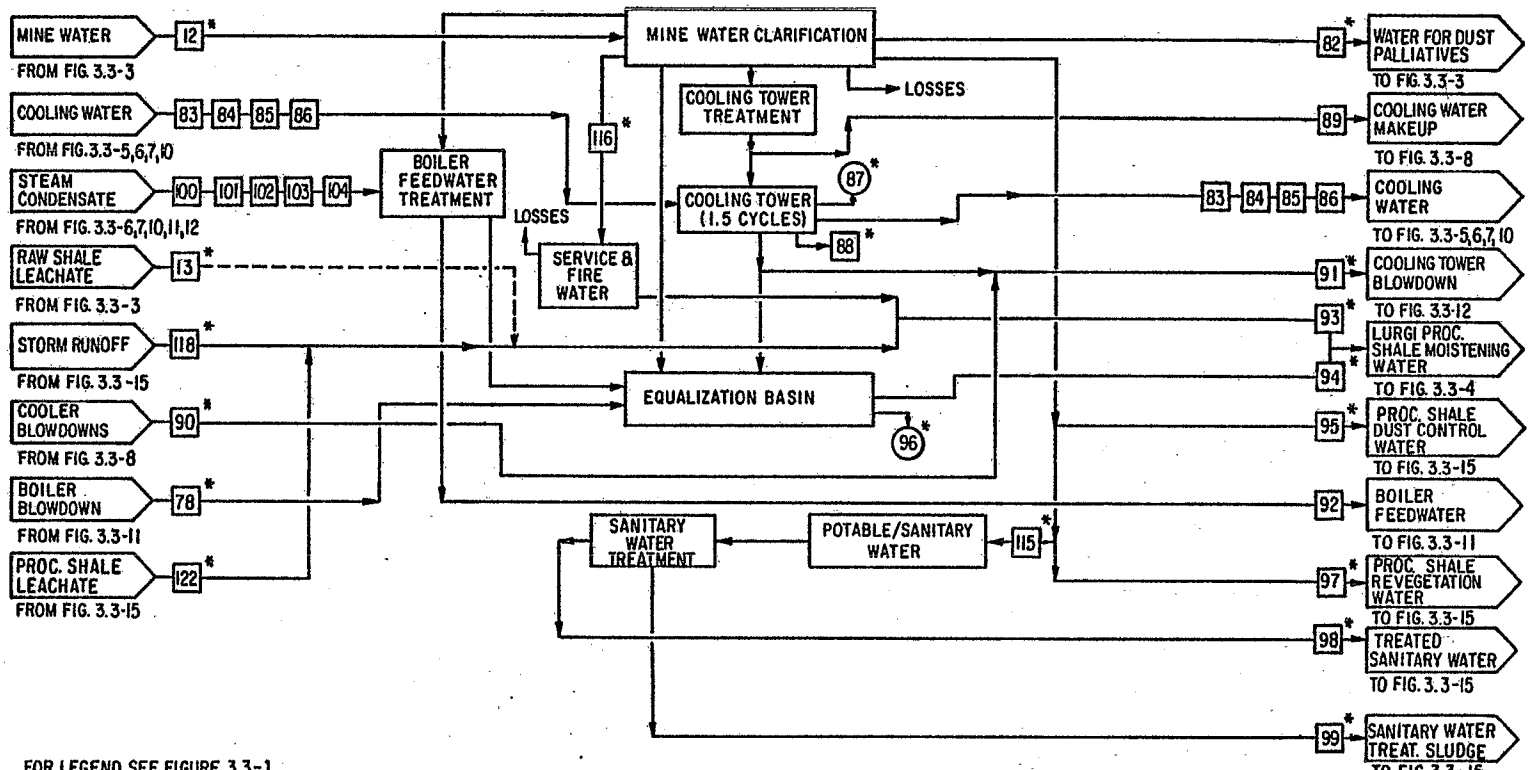

FOR LEGEND SEE FIGURE 3.3-1

STREAM NO.	12*	13*	78*	82*	83 THRU 86	87*	88*	89	90*	91*	92	93*	94*	95*	96*	97*	98*	99*	100 THRU 104					115*	116*	118*	122*
STREAM IDENTITY	MINE WATER	RAW SHALE LEACH-ATE	BOILER BLOW-DOWN	WATER FOR DUST PALL.	COOLING WATER WITH RETURN	COOL. TOWER EVAP.	COOL. TOWER DRIFT	COOL. WATER MAKEUP	COOLER BLOW-DOWNS	COOL. TOWER BLOW-DOWN	BOILER FEED-WATER	LURGI PROC. SHALE MOIST. WATER		PROC. SHALE DUST CONT.WATR.	WATER EVAP.	PROC. SHALE REVEG. WATER	TREAT. SANIT. WATER	SANIT. WATER TRTMNT SLUDGE	STEAM CONDENSATE					POTABLE/ SANIT. WATER	SRVC. & FIRE WATER	STORM RUN-OFF	PROC. SHALE LEACH.
FLOW RATE: 10^3ACFM																											
10^3lb/hr						768									3.5			N.D.									
gpm	6142	N.D.	146	329	N.D.←→N.D.		15	3110	2038	913	292	191	1008	493		326	27		N.D.	952	5514	180	N.D.	39	70	160	N.D.
TEMP., °F	AMB	AMB	N.D.	AMB	AMB←→AMB	AMB	AMB	AMB	N.D.	AMB	←							AMB	120	120	120	120	120	AMB	AMB	AMB	AMB
PRESS., psig	AMB	←		→	AMB←→AMB	←																				→	AMB

SOURCE: DRI based on Occidental Oil Shale, Inc. and Tenneco Shale Oil Co., April 1981

FIGURE 3.3-13 WATER MANAGEMENT, CASE STUDY A

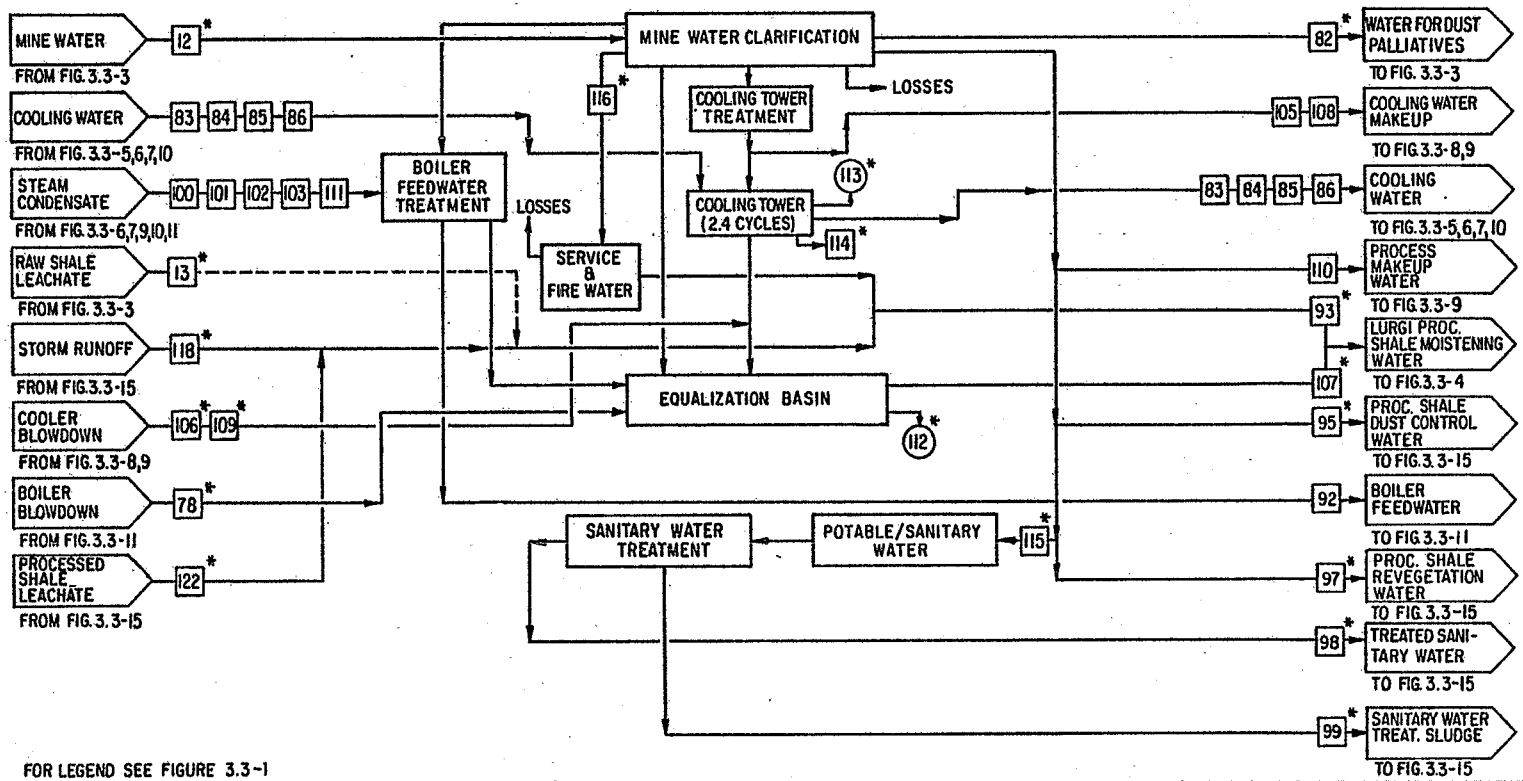

FOR LEGEND SEE FIGURE 3.3-1

STREAM NO.	12*	13*	78*	82*	83 THRU 86	92	93*	107*	95*	97*	98*	99*	100 THRU 103 111					105	108	106*	109*	110	112*	113*	114*	115*	116*	118*	122*
STREAM IDENTITY	MINE WATER	RAW SHALE LEACH-ATE	BOILER BLOW-DOWN	WATER FOR DUST PALL.	COOLING WATER WITH RETURN	BOILER FEED-WATER	LURGI SHALE WATER	PROC. MOIST. WATER	PROC. SHALE DUST CNTRL. WATER	PROC. SHALE REVEG. WATER	TREAT. SANIT. WATER	SANIT. WATER TRTMNT. SLUDGE	STEAM CONDENSATE					COOLING WATER MAKEUP		COOLER BLOWDOWNS		PROC. MAKE-UP WATER	WATER EVAP.	COOL. TOWER EVAP.	COOL. TOWER DRIFT	POTAB./ SANIT. WATER	SRVC. & FIRE WATER	STORM RUN-OFF	PROC. SHALE LEACH.
FLOW RATE: 10^3ACFM																													
10^3lb/hr												N.D.											3.0	782					
gpm	4276	N.D.	144	329	N.D. ← → N.D.	287	191	1339	493	326	27		N.D.	952	5514	180	38	1811	48	739	20	71			16	39	70	160	N.D.
TEMP., °F	AMB	AMB	N.D.	AMB ←							→	AMB	120	120	120	120	120	AMB	AMB	N.D.	N.D.	AMB ←						→	AMB
PRESS., psig	AMB ←																											→	AMB

SOURCE: DRI based on Occidental Oil Shale, Inc. and Tenneco Shale Oil Co., April 1981, and Ashland Oil, Inc. and Occidental Oil Shale, Inc., February 1977

FIGURE 3.3-14 WATER MANAGEMENT, CASE STUDY B

Overall flow of water for both case studies is presented in Figures 3.3-16 and 3.3-17, while the details of gas condensate and retort water treatment are presented in Figure 3.3-18. These figures follow the discussion for solid waste management. Flow rates on these diagrams indicate the amount of water in each stream rather than the total volume of the stream.

3.3.12 Solid Waste Management

Solid waste handling and disposal procedures are briefly described in the most recent PSD permit application (Occidental Oil Shale, Inc. and Tenneco Shale Oil Co., April 1981). A schematic based on that description is presented in Figure 3.3-15.

Of the several potential disposal sites available on Tract C-a, Sorghum Gulch was preferred because of its capacity, proximity to the processing facilities, and small watershed above the site. Site preparation primarily consists of removing the topsoil from the area where the landfill would be constructed. This topsoil will be stored temporarily on the surface, then used later to cover the completed faces of the landfill so that revegetation can begin.

The waste transfer to the disposal area will be carried out in two phases. The waste material from the processing facility will be transported to the disposal site using enclosed conveyors. It will then be loaded into 120-ton trucks and hauled to the active area of the disposal pile. The disposal operation will begin at the southern end of the gulch and move northward. The waste will be compacted to an in-place density of 100 lb/ft^3 in lifts of 18 inches. The faces of the landfill will be constructed in multiple benches with a slope of 4:1 (4 units horizontal:1 unit vertical). The benches will be spaced at 100-foot vertical intervals and will be 100 feet wide to provide enough room for the traffic. At regular intervals during the landfill development, the completed surfaces of the pile will be covered with 12 inches of topsoil and revegetated according to a plan approved by the Colorado Mined Land Reclamation Board. The final configuration for the faces will consist of 25-foot benches cut every 30 feet in elevation. These benches will be cross-sloped to catch the runoff from the sides of the pile.

A covered collection ditch containing pervious material will be constructed around the toe of the pile to collect the runoff. The runoff will then be retained in a settling pond at the bottom of Sorghum Gulch.

Another catchment dam will be constructed above the landfill to collect the precipitation from the Sorghum Gulch watershed, thus preventing it from running onto the waste pile. This water will be allowed to percolate into the ground.

The fugitive dust from the active areas of the pile will be suppressed using water sprays. The inactive areas will be sprayed with an asphaltic emulsion to keep the dust emission low.

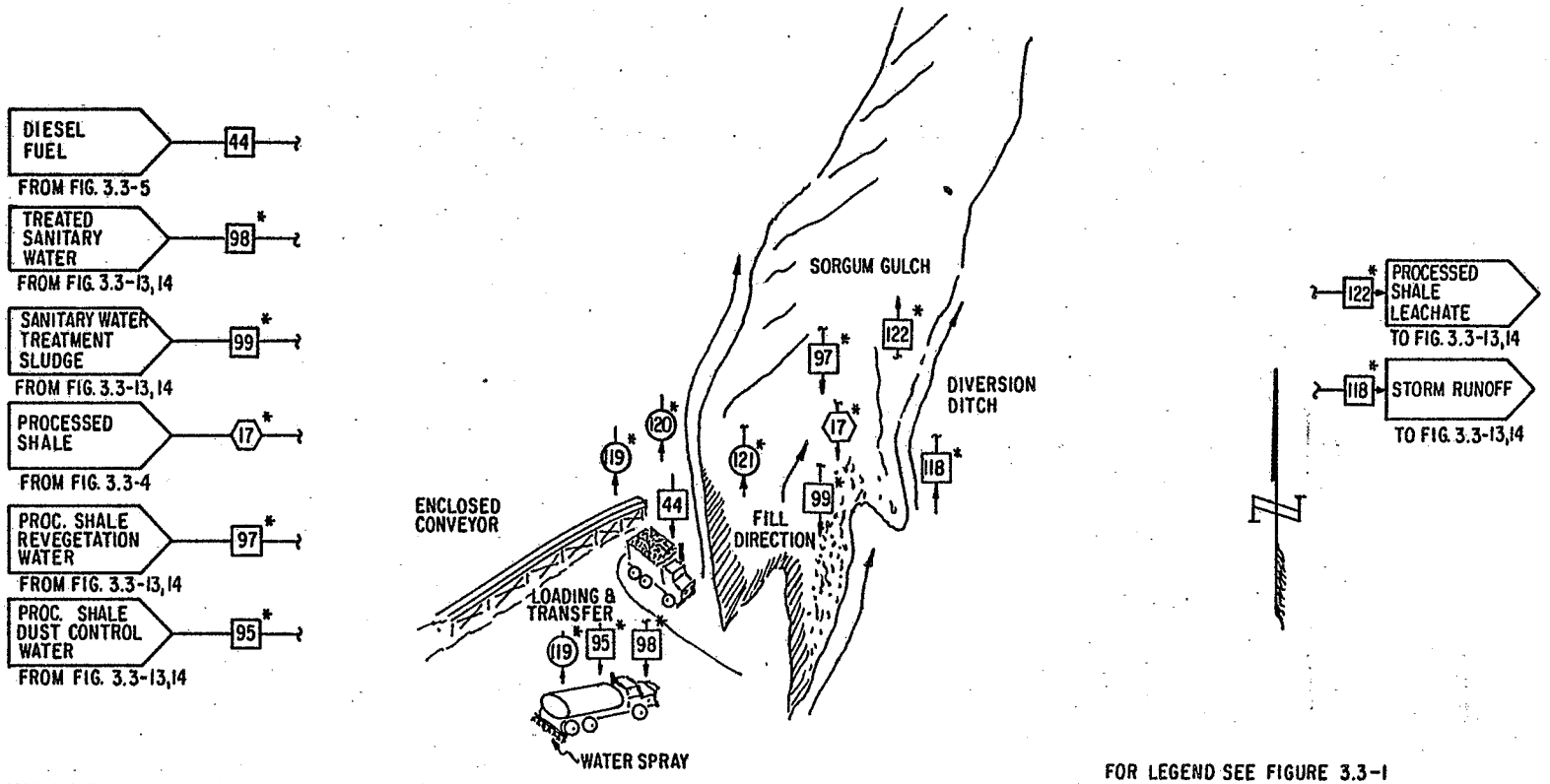

FOR LEGEND SEE FIGURE 3.3-1

STREAM NO.	17*	44	95*	97*	98*	99*	118*	119*	120*	121*	122*
STREAM IDENTITY	PROCESSED SHALE	DIESEL FUEL	PROC. SHALE DUST CONTROL WATER	PROC. SHALE REVEGETATION WATER	TREATED SANITARY WATER	SANITARY WATER TREATMENT SLUDGE	STORM RUNOFF	DIESEL EMISSIONS	CONVEYOR TRANSFER (DUST)	SHALE PILE (DUST)	PROCESSED SHALE LEACHATE
FLOW RATE: 10^3 ACFM									(included in # 6)	(included in # 6)	
10^3 lb/hr	4343					N.D.		N.D.	N.D.	N.D.	
gpm		N.D	493	326	27		160				N.D.
TEMP., °F	200	AMB ←					→ AMB	N.D.	AMB	AMB	AMB
PRESSURE, psig	AMB ←										→ AMB

SOURCE: DRI based on Occidental Oil Shale, Inc. and Tenneco Shale Oil Co., April 1981

FIGURE 3.3-15 ,SOLID WASTE DISPOSAL AREA

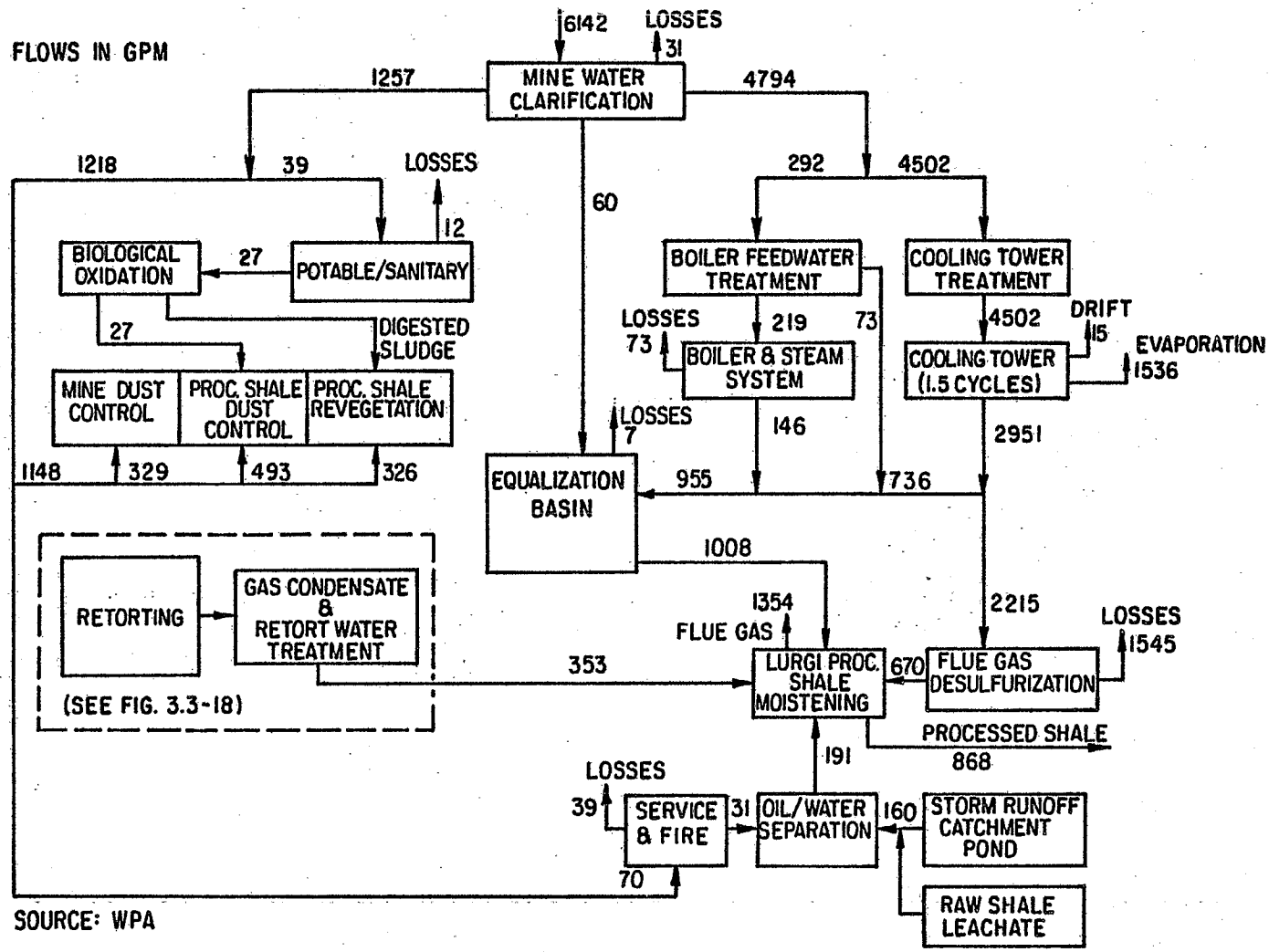

FIGURE 3.3-16 OVERALL WATER MANAGEMENT SCHEME, CASE STUDY A

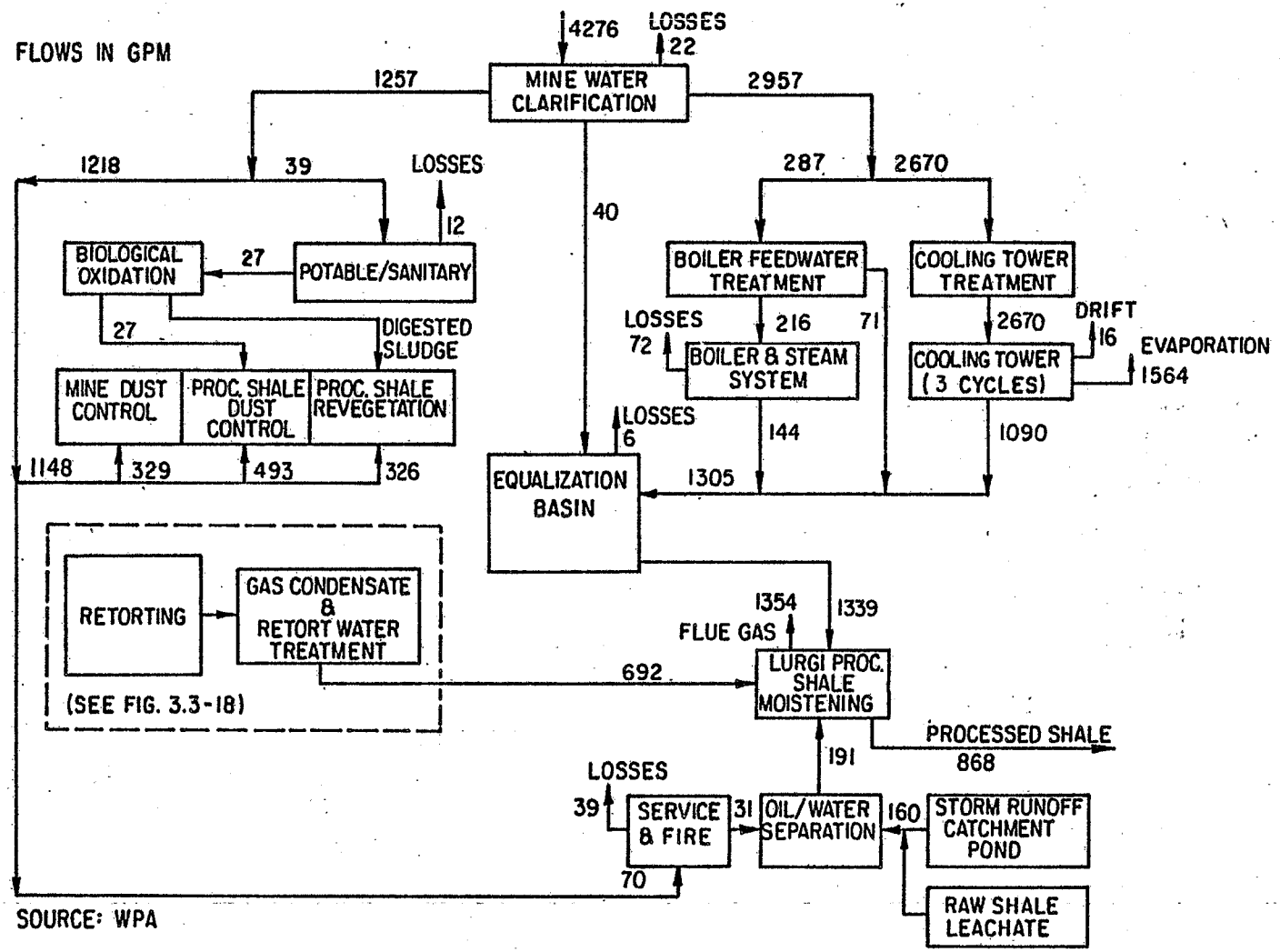

SOURCE: WPA

FIGURE 3.3-17 OVERALL WATER MANAGEMENT SCHEME, CASE STUDY B

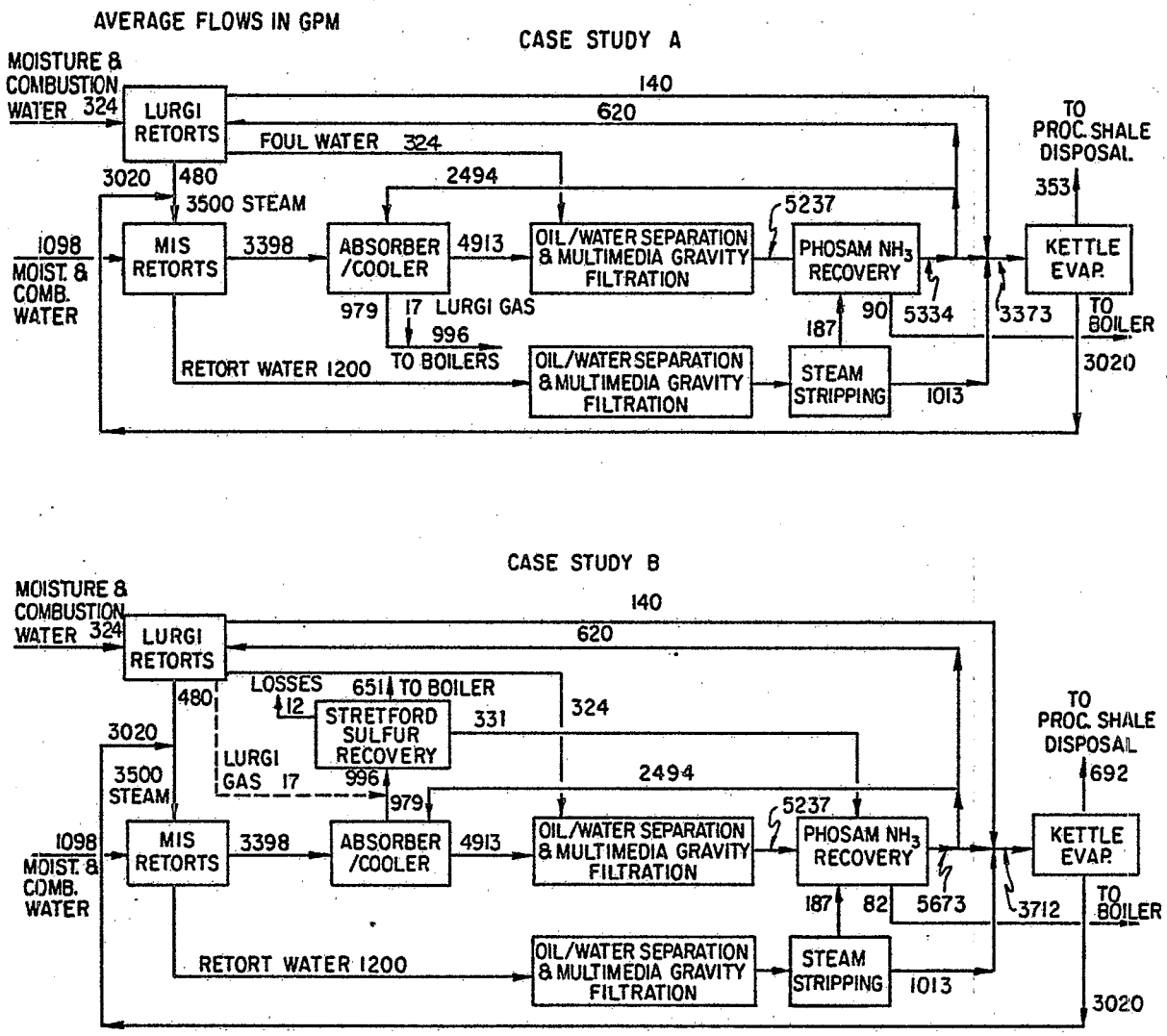

SOURCE : WPA

FIGURE 3.3-18. RETORT GAS CONDENSATE AND RETORT WATER TREATMENT, CASE STUDIES A&B

All processing wastes will be combined at the processing facility, i.e., there will be no separate transport of the individual waste components. The wastes will primarily consist of the Lurgi processed shale (stream 17) and its moisturizing components, such as the kettle evaporator sludge (stream 77), FGD sludge (stream 80), moisturizing water (stream 93 or 94), etc. In addition, the sludge from the sanitary water treatment (stream 99) will be brought in for the revegetation operation, but this is a minor stream.

SECTION 4

INVENTORY AND COMPOSITION OF PLANT PROCESS AND WASTE STREAMS

The stream compositions presented in this section were derived, to the extent possible, from pilot plant test data. In the absence of data from actual source testing, engineering analyses (by Denver Research Institute, Stone and Webster Engineering Corporation and Water Purification Associates) were performed on the technology and raw stream information from proposed industrial developments. The sources of these data, whether actual, estimated, or derived from published or unpublished information, are indicated.

The data presented are internally consistent for the overall plant complex; i.e., the principal chemical elements involved in emissions, effluents, and wastes are balanced throughout the plant. Trace elements generally are not considered because of the lack of consistent data available as a starting point. The stream compositions derived by engineering analysis generally agree with the available data from published sources. *Therefore, the data presented in this section, even though partly derived by engineering analysis, are believed to be both representative of the actual operations of such a plant and accurate enough to lead to relevant conclusions in analyses of various pollution controls.*

4.1 INVENTORY OF STREAMS

All but the most minor streams in the plant complex are inventoried in this section, and quantitative data are presented to define important characteristics of the streams. Section 4.2 presents detailed compositions of the major streams and shows changes in composition, from one point to the next, throughout the plant.

The streams encountered during the analysis of pollution control technologies for the plant are listed, along with their flow rates and components of concern, in Tables 4.1-1 (gases), 4.1-3 (liquids) and 4.1-5 (solids). Whether or not a stream must be controlled will depend upon its size, the quantities and characteristics of components, their allowable limits if released into the environment, and the disposition of the stream in an integrated plant design.

Tables 4.1-2, 4.1-4, and 4.1-6 list the major constituents in the streams. The streams are likewise divided into gases, liquids, and solids based on their physical characteristics. These tables summarize the data presented in Section 4.2, allowing for a quick comparison of the streams.

TABLE 4.1-1. INVENTORY OF GASEOUS STREAMS

Stream Number (Table No.)	Description of Stream	Mass Flow, 10^3 lb/hr (10^3 ACFM)	Components of Concern	Mass Flow of Component, lb/hr	Remarks[a]
3*	Mine Air	(6,400)	--[b]	--	The air is used to provide a supply of fresh air in the mine and to flush out diesel emissions, particulates, etc., from the underground activities.
4*	Mine Vent Emission	(6,400)	Particulates CO NOx SO_2	72 477 267 16	A large amount of the mine air is circulated through the mine so that the pollutant emissions are below allowable limits.
5*	Diesel Emissions - Mining Equipment	N.D.[c]	CO NOx SO_2 Hydrocarbons Particulates	28 162 10 8 6	Catalytic converters are installed on the diesel-powered equipment. Additional control is not essential (emission quantities are for streams 5 and 119 combined).
6*	Fugitive Dust Emissions - Mining Activities	N.D.	Particulates	115.2	Water and foam spray controlled (streams 120 and 121 are included in the mass flow component).
7*	Production Shaft Conveyor Transfer Point, Baghouse Emission	(10)	Particulates	2.2	Baghouse controlled.
8*	Raw Shale Storage Load-in, Baghouse Emission	(50)	Particulates	2.0	Baghouse controlled.
9*	Crushing and Screening, Baghouse Emission	(142)	Particulates	45.0	Baghouse controlled.
10*	Fine Ore Conveyor Transfer Point, Baghouse Emission	(16)	Particulates	5.1	Baghouse controlled.
11*	Fine Ore Storage Load-in, Baghouse Emission	(1.2)	Particulates	0.8	Baghouse controlled.
14*	Fine Ore Storage Load-out, Baghouse Emission	(4)	Particulates	0.1	Baghouse controlled.
15* (4.2-31, 4.2-32)	Lurgi Flue Gas	3,471.0 (818.3)	CO NOx SO_2 Hydrocarbons Particulates	2,470 270 110 N.D. 284-365	The SO_2 is reported to be adsorbed irreversibly on the processed shale. The particulates are controlled by an electrostatic precipitator. NOx control is not applied.
16 (4.2-17)	Lurgi Retort Vapors	939.2	Processed Shale Dust NH_3 H_2S SO_2	77,000 2,110 880 270	Dust removal is required before product condensation and blending. Control of NH_3 and H_2S is necessary before burning the vapors.

(Continued)

TABLE 4.1-1 (cont.)

Stream Number (Table No.)	Description of Stream	Mass Flow, 10^3 lb/hr (10^3 ACFM)	Components of Concern	Mass Flow of Component, lb/hr	Remarks[a]
18*	Venturi Emission from Processed Shale Moisturizer	(38.6)	Particulates	24	Primarily steam and some particulates are generated during processed shale moisturizing. These are emitted to the atmosphere after wet scrubbing.
19* (4.2-37, 4.2-40)	Steam from Lurgi Waste Heat Boiler	240.1	NH_3	146	Low-quality steam is fed to the MIS retorts. Since ammonia may be recovered in the MIS gas condensate, control is not necessary.
21	Combustion Air to Lurgi Lift Pipes	2,498	--	--	The air is used for Lurgi processed shale incineration.
22 (4.2-18)	Lurgi Raw Retort Gas	491.5	NH_3 H_2S	2,110 880	The NH_3 and H_2S in the gas should be removed prior to fuel gas consumption.
23 (4.2-19)	Lurgi Retort Gas	188.0	NH_3 H_2S	40 880	A majority of the ammonia is removed with the gas liquor. The quantity of H_2S is insignificant compared to that in the MIS gas, but its removal may be necessary before burning the gas.
28*	HC Emissions from Oil Storage Tanks	0.1	Hydrocarbons	98.3	Proper tanks are used for oil product storage. Includes streams 34, 40 and 47.
31 (4.2-20, 4.2-21)	Naphtha-Free Lurgi Retort Gas	153.6	NH_3 H_2S	40 880	The quantities of NH_3 and H_2S are minor when compared to those in the MIS gas. Removal of H_2S may be necessary before burning the gas.
32	Naptha-Free Lurgi Gas to Lift Pipes	N.D.	NH_3 H_2S	N.D. N.D.	This is supplemental fuel to the lift pipes. The combustion products are emitted with the Lurgi flue gas.
34*	HC Emission from Naphtha Storage Tank	N.D.	Hydrocarbons	N.D.	Included in stream 28.
37*	Combustion Air to MIS Retorts	6,508	--	--	
38* (4.2-15)	MIS Retort Vapor	10,998.3	NH_3 H_2S COS CS_2 CH_3SH	28,870 17,290 880 220 280	Treatment prior to or after fuel consumption is necessary for reducing potential NOx and SO_2 emissions.
40*	HC Emission from MIS Heavy Oil Storage Tank	N.D.	Hydrocarbons	N.D.	Included in stream 28.

(Continued)

TABLE 4.1-1 (cont.)

Stream Number (Table No.)	Description of Stream	Mass Flow, 10^3 lb/hr (10^3 ACFM)	Components of Concern	Mass Flow of Component, lb/hr	Remarks[a]
43 (4.2-35, 4.2-38, 4.2-43)	Retort Water Steam Stripper Overhead	97.6	NH_3 H_2S Volatile Organics	750 60 554	NH_3 is recovered in the Phosam-W unit. H_2S and volatile hydrocarbons are combusted with the fuel gas.
45 (4.2-16)	Compressed MIS Retort Gas	9,023.0	NH_3 H_2S COS CS_2 CH_3SH	2,220 17,050 880 220 280	Treatment prior to or after fuel consumption is necessary for reducing potential SO_2 emissions.
47*	HC Emission from MIS Light Oil Storage Tank	N.D.	Hydrocarbons	N.D.	Included in stream 28.
49*	Cooling Water Evaporation from Humidified Air Coolers	530.5	N.D.	N.D.	The clarified and treated mine water is used as the cooling water.
51 (4.2-25)	Stretford Treated Lurgi Retort Gas (Case Study B)	148.4	NH_3 H_2S	40 3	H_2S is reduced to 30 ppmv. The quantity of H_2S is small compared to that in the MIS gas. The treated gas is burned in the steam boilers without further treatment.
52 (4.2-24)	Stretford Treated MIS Retort Gas (Case Study B)	8,641.0	NH_3 H_2S COS CS_2 CH_3SH	1,200 310 740 220 90	H_2S is reduced to 30 ppmv, but appreciable amounts of other sulfur compounds are not removed. The treated gas is burned in the steam boilers without additional pre- or post-treatment.
53 (4.2-26)	Stretford Oxidizer Vent Gas (Case Study B)	708.7	COS CH_3SH	132 197	The vent gas is used as combustion air in the boilers. This prevents a direct release of the components into the atmosphere.
54 (4.2-26)	Stripping Air to Stretford Oxidizer (Case Study B)	497.7	--	--	The air is used primarily to regenerate the Stretford chemicals.
58*	Cooling Water Evaporation from Humidifed Air Coolers (Case Study B)	14	N.D.	N.D.	See stream 49.
61* (4.2-36, 4.2-39)	Phosam-W Overhead Vapors	84.5-86.4	NH_3 H_2S Volatile Organics	699-714 300-310 2,088	Combustion with the plant fuels reduces hydrocarbon emission and prevents direct release of NH_3 and H_2S.

(Continued)

TABLE 4.1-1 (cont.)

Stream Number (Table No.)	Description of Stream	Mass Flow, 10^3 lb/hr (10^3 ACFM)	Components of Concern	Mass Flow of Component, lb/hr	Remarks[a]
67 (4.2-28, 4.2-29)	Flue Gas before FGD - Steam Boilers (Case Study A)	17,782.6	SO_2 NOx CO	36,030 2,630 710	Treatment to reduce the SO_2 emission is necessary.
68* (4.2-30)	Flue Gas - Steam Boilers (Case Study B)	17,431.3	CO NOx SO_2 Hydrocarbons Particulates	780 1,760 2,860 22 149	The flue gas originates from the combustion of Stretford treated MIS and Lurgi flue gases. Since the H_2S is already removed from these gases, further control is not necessary.
69	High Pressure Steam from Steam Boilers	7,286	--	--	High-quality steam is produced from the softened and demineralized mine water.
70* (4.2-44, 4.2-45)	Low-Quality Steam to MIS Retorts	1,511.3	NH_3 Volatile Organics	554-614 719-721	Various process waters are used to produce the low-quality steam. Its use in the MIS retorts provides control of hydrocarbons through combustion, and of NH_3 through recovery in the retort water or gas condensate.
71	Steam to FGD (Case Study A)	N.D.	--	--	A portion of the high pressure steam (stream 69) is reduced in pressure during the generation of electricity, then used for process steam needs.
72	Steam to Naphtha Recovery	N.D.	--	--	See stream 71.
73	Steam to MIS Retort Water Steam Stripper	90	--	--	See stream 71.
74	Steam to Stretford Sulfur Melting Unit (Case Study B)	19	--	--	See stream 71.
75	Steam to Phosam-W Ammonia Recovery Unit	476	--	--	See stream 71.
79* (4.2-28, 4.2-29)	Flue Gas after FGD (Case Study A)	18,521.2	CO NOx SO_2 Hydrocarbons Particulates	710 2,630 2,100 23 151	The NOx emission is already reduced by removal of ammonia from the retort gases (the NOx quantity does not include the fixation of atmospheric nitrogen). The SO_2 is reduced to 50 ppmv by lime/limestone flue gas scrubbing.
87*	Cooling Tower Evaporation (Case Study A)	768	--	--	See stream 49.

(Continued)

TABLE 4.1-1 (cont.)

Stream Number (Table No.)	Description of Stream	Mass Flow, 10^3 lb/hr (10^3 ACFM)	Components of Concern	Mass Flow of Component, lb/hr	Remarks[a]
96*	Water Evaporation from Equalization Basin (Case Study A)	3.5	N.D.	N.D.	The evaporation represents primarily the water loss, but some volatile compounds from the process waters may also be emitted.
112*	Water Evaporation from Equalization Basin (Case Study B)	3	N.D.	N.D.	See stream 96.
113*	Cooling Tower Evaporation (Case Study B)	782	--	--	See stream 49.
117*	HC Emissions, Miscellaneous	0.07	Hydrocarbons	65.5	This emission represents the leakage from valves, pumps, etc. Proper maintenance practices are used to control the leakage.
119*	Diesel Emissions - Disposal Equipment	N.D.	CO NOx SO_2 Hydrocarbons Particulates	N.D. N.D. N.D. N.D. N.D.	Included in stream 5.
120*	Fugitive Dust Emissions - Processed Shale Conveyor Transfer Points	N.D.	Particulates	--	Moistening of the processed shale and application of dust suppressants reduces the fugitive particulate emissions. Included in stream 6.
121*	Dust Emissions - Processed Shale Pile	N.D.	Particulates	N.D.	Periodic application of water sprays and eventual revegetation of the surface of the processed shale pile will reduce the fugitive dust emissions. Included in stream 6.

* Indicates streams that come into contact with the environment.

[a] The remarks indicate the stream disposition. The control technologies applied to the streams are those proposed for the Tract C-b development.

[b] Dashes (--) indicate no known components of concern.

[c] N.D. = Not determined.

Source: DRI estimates based on information from Ashland Oil, Inc. and Occidental Oil Shale, Inc., October 1977, and Occidental Oil Shale, Inc. and Tenneco Shale Oil Co., April 1981.

TABLE 4.1-2. COMPOSITIONS OF GASEOUS STREAMS

Stream Number (Table No.)	Stream Description	Mass Flow, 10^3 lb/hr (10^3 ACFM)	Components, 10^3 lb/hr											
			H_2	CO	CO_2	N_2	NH_3	H_2S	CH_4	C_2H_4	C_2H_6	C_3H_6	C_3H_8	C_4H_8
3*	Mine Air	(6,400)	0**	0	0	16,968	0	0	0	0	0	0	0	0
4*	Mine Vent Emission	(6,400)	0	0.48	N.D.**	16,968	0	0	N.D.	0	0	0	0	0
5*	Diesel Emissions - Mining Equipment (stream 119 included)	N.D.	0	0.028	N.D.	N.D.	0	0	N.D.	0	0	0	0	0
6*	Fugitive Dust Emissions - Mining Activities (streams 120 and 121 included)	N.D.	0	N.D.	N.D.	N.D.	0	0	N.D.	0	0	0	0	0
7*	Production Shaft Conveyor Transfer Point, Baghouse Emission	(10)	0	0	0	N.D.	0	0	0	0	0	0	0	0
8*	Raw Shale Storage Load-in, Baghouse Emission	(50)	0	0	0	N.D.	0	0	0	0	0	0	0	0
9*	Crushing and Screening, Baghouse Emission	(142)	0	0	0	N.D.	0	0	0	0	0	0	0	0
10*	Fine Ore Conveyor Transfer Point, Baghouse Emission	(16)	0	0	0	N.D.	0	0	0	0	0	0	0	0
11*	Fine Ore Storage Load-in, Baghouse Emission	(1.2)	0	0	0	N.D.	0	0	0	0	0	0	0	0
14*	Fine Ore Storage Load-out, Baghouse Emission	(4)	0	0	0	N.D.	0	0	0	0	0	0	0	0
15* (4.2-31, 4.2-32)	Lurgi Flue Gas	3,471.0 (818.3)	0	2.47	660	1,914	0	0	N.D.	0	0	0	0	0
16 (4.2-17)	Lurgi Retort Vapors	939.2	3.65	5.24	73.15	5.24	2.11	0.88	13.91	8.99	9.23	11.52	6.18	10.11
18*	Venturi Emission from Processed Shale Moisturizer	(38.6)	0	0	0	N.D.	0	0	0	0	0	0	0	0
19* (4.2-37, 4.2-40)	Steam from Lurgi Waste Heat Boiler	240.1	0	0	0	0	0.15	0	0	0	0	0	0	0
21	Combustion Air to Lurgi Lift Pipes	2,498	0	0	0	1,904	0	0	0	0	0	0	0	0

(Continued)

TABLE 4.1-2 (cont.)

Stream Number (Table No.)	Stream Description	Mass Flow, 10^3 lb/hr (10^3 ACFM)	Components, 10^3 lb/hr													
			C_4H_{10}	Misc. HC	C_4^+	Light Oil	Middle Oil	Heavy Oil	COS	CS_2	CH_3SH	H_2O	O_2	NOx lb/hr	SO_2 lb/hr	TPM lb/hr
3*	Mine Air	(6,400)	0	0	0	0	0	0	0	0	0	139	5,155	0	0	0
4*	Mine Vent Emission	(6,400)	0	0	0	0	0	0	0	0	0	139	5,155	267	16	71.8
5*	Diesel Emissions - Mining Equipment (stream 119 included)	N.D.	0	0.008	0	0	0	0	0	0	0	N.D.	N.D.	162	10	6.0
6*	Fugitive Dust Emissions - Mining Activities (streams 120 and 121 included)	N.D.	0	0	0	0	0	0	0	0	0	N.D.	N.D.	N.D.	N.D.	115.2
7*	Production Shaft Conveyor Transfer Point, Baghouse Emission	(10)	0	0	0	0	0	0	0	0	0	N.D.	N.D.	0	0	2.2
8*	Raw Shale Storage Load-in, Baghouse Emission	(50)	0	0	0	0	0	0	0	0	0	N.D.	N.D.	0	0	2.0
9*	Crushing and Screening, Baghouse Emission	(142)	0	0	0	0	0	0	0	0	0	N.D.	N.D.	0	0	45.0
10*	Fine Ore Conveyor Transfer Point, Baghouse Emission	(16)	0	0	0	0	0	0	0	0	0	N.D.	N.D.	0	0	5.1
11*	Fine Ore Storage Load-in, Baghouse Emission	(1.2)	0	0	0	0	0	0	0	0	0	N.D.	N.D.	0	0	0.8
14*	Fine Ore Storage Load-out, Baghouse Emission	(4)	0	0	0	0	0	0	0	0	0	N.D.	N.D.	0	0	0.1
15* (4.2-31, 4.2-32)	Lurgi Flue Gas	3,471.0 (818.3)	0	N.D.	0	0	0	0	0	0	0	740	155	270	110	284-365
16 (4.2-17)	Lurgi Retort Vapors	939.2	3.10	0.26	17.52	151.5	304.32	144.72	0	0	0	167.25	0	0	270	0
18*	Venturi Emission from Processed Shale Moisturizer	(38.6)	0	0	0	0	0	0	0	0	0	N.D.	N.D.	0	0	24.1
19* (4.2-37, 4.2-40)	Steam from Lurgi Waste Heat Boiler	240.1	0	0	0	0	0	0	0	0	0	240	0	0	0	0
21	Combustion Air to Lurgi Lift Pipes	2,498	0	0	0	0	0	0	0	0	0	16	578	0	0	0

(Continued)

TABLE 4.1-2 (cont.)

Stream Number (Table No.)	Stream Description	Mass Flow, 10^3 lb/hr (10^3 ACFM)	Components, 10^3 lb/hr											
			H_2	CO	CO_2	N_2	NH_3	H_2S	CH_4	C_2H_4	C_2H_6	C_3H_6	C_3H_8	C_4H_8
22 (4.2-18)	Lurgi Raw Retort Gas	491.5	3.65	5.24	73.15	5.24	2.11	0.88	13.91	8.99	9.23	11.52	6.18	10.11
23 (4.2-19)	Lurgi Retort Gas	188.0	3.65	5.24	70.64	5.24	0.04	0.88	13.91	8.99	9.23	11.52	6.18	10.11
28*	HC Emissions from Oil Storage Tanks (streams 34, 40 and 47 included)	0.1	0	0	0	0	0	0	0	0	0	0	0	0
31 (4.2-20, 4.2-21)	Naphtha-Free Lurgi Retort Gas	153.6	3.65	5.24	70.64	5.24	0.04	0.88	13.91	8.99	9.23	11.52	6.18	10.11
32	Naphtha-Free Lurgi Gas to Lift Pipes	N.D.	N.D.	N.D.	N.D.	N.D.	N.D.	N.D.	N.D.	N.D.	N.D.	N.D.	N.D.	N.D.
34*	HC Emission from Naphtha Storage Tank (included in stream 28)	N.D.	0	0	0	0	0	0	N.D.	0	0	0	0	0
37*	Combustion Air to MIS Retorts	6,508	0	0	0	4,960	0	0	0	0	0	0	0	0
38* (4.2-15)	MIS Retort Vapor	10,998.3	55.04	143.49	3,217.6	4,972.4	28.9	17.29	75.44	9.82	22.54	9.82	15.44	0
40*	HC Emission from MIS Heavy Oil Storage Tank (included in stream 28)	N.D.	0	0	0	0	0	0	N.D.	0	0	0	0	0
43 (4.2-35, 4.2-38, 4.2-43)	Retort Water Steam Stripper Overhead	97.6	0	0	2.75	0	0.75	0.06	0	0	0	0	0	0
45 (4.2-16)	Compressed MIS Retort Gas	9,023.0	55.04	143.49	3,184.6	4,972.4	2.22	17.05	75.44	9.82	22.54	9.82	15.44	0
47*	HC Emission from MIS Light Oil Storage Tank (included in stream 28)	N.D.	0	0	0	0	0	0	2	0	0	0	0	0
49*	Cooling Water Evaporation from Humidified Air Coolers	530.5	0	0	0	0	0	0	0	0	0	0	0	0

(Continued)

TABLE 4.1-2 (cont.)

Stream Number (Table No.)	Stream Description	Mass Flow, 10^3 lb/hr (10^3 ACFM)	Components, 10^3 lb/hr													
			C_4H_{10}	Misc. HC	C_4^+	Light Oil	Middle Oil	Heavy Oil	COS	CS_2	CH_3SH	H_2O	O_2	NOx lb/hr	SO_2 lb/hr	TPM lb/hr
22 (4.2-18)	Lurgi Raw Retort Gas	491.5	3.1	0.26	17.52	151.5	1.4	0	0	0	0	167.25	0	0	270	0
23 (4.2-19)	Lurgi Retort Gas	188.0	3.1	0	17.52	16.53	0	0	0	0	0	5.18	0	0	20	0
28*	HC Emissions from Oil Storage Tanks (streams 34, 40 and 47 included)	0.1	0	0.0983	0	0	0	0	0	0	0	0	0	0	0	0
31 (4.2-20, 4.2-21)	Naphtha-Free Lurgi Retort Gas	153.6	3.1	0	0	0	0	0	0	0	0	4.83	0	0	20	0
32	Naphtha-Free Lurgi Gas to Lift Pipes	N.D.	N.D.	0	0	0	0	0	0	0	0	N.D.	0	0	N.D.	0
34*	HC Emission from Naphtha Storage Tank (included in stream 28)	N.D.	0	N.D.	0	0	0	0	0	0	0	0	0	0	0	0
37*	Combustion Air to MIS Retorts	6,508	0	0	0	0	0	0	0	0	0	42	1,507	0	0	0
38* (4.2-15)	MIS Retort Vapor	10,998.3	0	0	24.32	57.45	0	0	0.88	0.22	0.28	2,347.5	0	0	0	0
40*	HC Emission from MIS Heavy Oil Storage Tank (included in stream 28)	N.D.	0	N.D.	0	0	0	0	0	0	0	0	0	0	0	0
43 (4.2-35, 4.2-38, 4.2-43)	Retort Water Steam Stripper Overhead	97.6	0	0.56	0	0	0	0	0	0	0	93.49	0	0	0	0
45 (4.2-16)	Compressed MIS Retort Gas	9,023.0	0	0	24.32	0	0	0	0.88	0.22	0.28	489.49	0	0	0	0
47*	HC Emission from MIS Light Oil Storage Tank (included in stream 28)	N.D.	0	N.D.	0	0	0	0	0	0	0	0	0	0	0	0
49*	Cooling Water Evaporation from Humidified Air Coolers	530.5	0	0	0	0	0	0	0	0	0	530.5	0	0	0	0

(Continued)

TABLE 4.1-2 (cont.)

Stream Number (Table No.)	Stream Description	Mass Flow, 10^3 lb/hr (10^3 ACFM)	Components, 10^3 lb/hr											
			H_2	CO	CO_2	N_2	NH_3	H_2S	CH_4	C_2H_4	C_2H_6	C_3H_6	C_3H_8	C_4H_8
51 (4.2-25)	Stretford Treated Lurgi Retort Gas (Case Study B)	148.4	3.65	5.24	66.4	5.24	0.04	0.003	13.91	8.99	9.23	11.52	6.18	10.11
52 (4.2-24)	Stretford Treated MIS Retort Gas (Case Study B)	8,641.0	55.04	143.49	2,991.36	4,972.36	1.20	0.31	75.44	9.82	22.54	9.82	15.44	0
53 (4.2-26)	Stretford Oxidizer Vent Gas (Case Study B)	708.7	0	0	195.2	384.3	0	0	0	0	0	0	0	0
54 (4.2-26)	Stripping Air to Stretford Oxidizer (Case Study B)	497.7	0	0	0	384.25	0	0	0	0	0	0	0	0
58*	Cooling Water Evaporation from Humidified Air Coolers (Case Study B)	14	0	0	0	0	0	0	0	0	0	0	0	0
61* (4.2-36, 4.2-39)	Phosam-W Overhead Vapors	84.5-86.4	0	0	38.3-40.6	0	0.699-0.714	0.300-0.310	0	0	0	0	0	0
67 (4.2-28, 4.2-29)	Flue Gas Before FGD - Steam Boilers (Case Study A)	17,782.6	0	0.71	4,175	11,459	0	0	0	0	0	0	0	0
68* (4.2-30)	Flue Gas - Steam Boilers (Case Study B)	17,431.3	0	0.78	4,175	11,331	0	0	0	0	0	0	0	0
69	High Pressure Steam from Steam Boilers	7,286	0	0	0	0	N.D.	0	0	0	0	0	0	0
70* (4.2-44, 4.2-45)	Low-Quality Steam to MIS Retorts	1,511.3	0	0	0	0	0.55-0.61	0	0	0	0	0	0	0
71	Steam to FGD (Case Study A)	N.D.	0	0	0	0	N.D.	0	0	0	0	0	0	0
72	Steam to Naphtha Recovery	N.D.	0	0	0	0	N.D.	0	0	0	0	0	0	0
73	Steam to MIS Retort Water Steam Stripper	90	0	0	0	0	N.D.	0	0	0	0	0	0	0
74	Steam to Stretford Sulfur Melting Unit (Case Study B)	19	0	0	0	0	N.D.	0	0	0	0	0	0	0
75	Steam to Phosam-W Ammonia Recovery Unit	476	0	0	0	0	N.D.	0	0	0	0	0	0	0

(Continued)

TABLE 4.1-2 (cont.)

Stream Number (Table No.)	Stream Description	Mass Flow, 10^3 lb/hr (10^3 ACFM)	Components, 10^3 lb/hr													
			C_4H_{10}	Misc. HC	C_4^+	Light Oil	Middle Oil	Heavy Oil	COS	CS_2	CH_3SH	H_2O	O_2	NOx lb/hr	SO_2 lb/hr	TPM lb/hr
51 (4.2-25)	Stretford Treated Lurgi Retort Gas (Case Study B)	148.4	3.10	0	0	0	0	0	0	0	0	4.74	0	0	0	0
52 (4.2-24)	Stretford Treated MIS Retort Gas (Case Study B)	8,641.0	0	0	24.32	0	0	0	0.74	0.22	0.09	318.78	0	0	0	0
53 (4.2-26)	Stretford Oxidizer Vent Gas (Case Study B)	708.7	0	0	0	0	0	0	0.13	0	0.20	26.8	102.1	0	0	0
54 (4.2-26)	Stripping Air to Stretford Oxidizer (Case Study B)	497.7	0	0	0	0	0	0	0	0	0	3	110.5	0	0	0
58*	Cooling Water Evaporation from Humidified Air Coolers (Case Study B)	14	0	0	0	0	0	0	0	0	0	14	0	0	0	0
61* (4.2-36, 4.2-39)	Phosam-W Overhead Vapors	84.5-86.4	0	2.09	0	0	0	0	0	0	0	40.8-45.0	0	0	0	0
67 (4.2-28, 4.2-29)	Flue Gas Before FGD - Steam Boilers (Case Study A)	17,782.6	0	0	0	0	0	0	0	0	0	1,569	540	2,630	36,030	0
68* (4.2-30)	Flue Gas - Steam Boilers (Case Study B)	17,431.3	0	0.022	0	0	0	0	0	0	0	1,392	530	1,760	2,860	149
69	High Pressure Steam from Steam Boilers	7,286	0	0	0	0	0	0	0	0	0	7,286	0	0	0	0
70* (4.2-44, 4.2-45)	Low-Quality Steam to MIS Retorts	1,511.3	0	0.72	0	0	0	0	0	0	0	1,510	0	0	0	0
71	Steam to FGD (Case Study A)	N.D.	0	0	0	0	0	0	0	0	0	N.D.	0	0	0	0
72	Steam to Naphtha Recovery	N.D.	0	0	0	0	0	0	0	0	0	N.D.	0	0	0	0
73	Steam to MIS Retort Water Steam Stripper	90	0	0	0	0	0	0	0	0	0	90.0	0	0	0	0
74	Steam to Stretford Sulfur Melting Unit (Case Study B)	19	0	0	0	0	0	0	0	0	0	19	0	0	0	0
75	Steam to Phosam-W Ammonia Recovery Unit	476	0	0	0	0	0	0	0	0	0	476	0	0	0	0

(Continued)

TABLE 4.1-2 (cont.)

Stream Number (Table No.)	Stream Description	Mass Flow, 10^3 lb/hr (10^3 ACFM)	Components, 10^3 lb/hr											
			H_2	CO	CO_2	N_2	NH_3	H_2S	CH_4	C_2H_4	C_2H_6	C_3H_6	C_3H_8	C_4H_8
79* (4.2-28, 4.2-29)	Flue Gas after FGD (Case Study A)	18,521.2	0	0.71	4,175	11,459	0	0	0	0	0	0	0	0
87*	Cooling Tower Evaporation (Case Study A)	768	0	0	0	0	0	0	0	0	0	0	0	0
96*	Water Evaporation from Equalization Basin (Case Study A)	3.5	0	0	0	0	0	0	0	0	0	0	0	0
112*	Water Evaporation from Equalization Basin (Case Study B)	3	0	0	0	0	0	0	0	0	0	0	0	0
113*	Cooling Tower Evaporation (Case Study B)	782	0	0	0	0	0	0	0	0	0	0	0	0
117*	HC Emissions, Miscellaneous	0.07	0	0	0	0	0	0	0	0	0	0	0	0
119*	Diesel Emissions - Disposal Equipment (included in stream 5)	N.D.	0	N.D.	N.D.	N.D.	0	0	N.D.	0	0	0	0	0
120*	Fugitive Dust Emissions - Processed Shale Conveyor Transfer Points (included in stream 6)	N.D.	0	0	0	0	0	0	0	0	0	0	0	0
121*	Dust Emissions - Processed Shale Pile (included in stream 6)	N.D.	0	0	0	0	0	0	0	0	0	0	0	0

(Continued)

TABLE 4.1-2 (cont.)

Stream Number (Table No.)	Stream Description	Mass Flow, 10^3 lb/hr (10^3 ACFM)	Components, 10^3 lb/hr													
			C_4H_{10}	Misc. HC	C_4^+	Light Oil	Middle Oil	Heavy Oil	COS	CS_2	CH_3SH	H_2O	O_2	NOx lb/hr	SO_2 lb/hr	TPM lb/hr
79* (4.2-28, 4.2-29)	Flue Gas after FGD (Case Study A)	18,521.2	0	0.023	0	0	0	0	0	0	0	2,342	540	2,630	2,100	151
87*	Cooling Tower Evaporation (Case Study A)	768	0	0	0	0	0	0	0	0	0	768	0	0	0	0
96*	Water Evaporation from Equalization Basin (Case Study A)	3.5	0	0	0	0	0	0	0	0	0	3.5	0	0	0	0
112*	Water Evaporation from Equalization Basin (Case Study B)	3	0	0	0	0	0	0	0	0	0	3.0	0	0	0	0
113*	Cooling Tower Evaporation (Case Study B)	782	0	0	0	0	0	0	0	0	0	782	0	0	0	0
117*	HC Emissions, Miscellaneous	0.07	0	0.07	0	0	0	0	0	0	0	0	0	0	0	0
119*	Diesel Emissions - Disposal Equipment (included in stream 5)	N.D.	0	N.D.	0	0	0	0	0	0	0	N.D.	N.D.	N.D.	N.D.	N.D.
120*	Fugitive Dust Emissions - Processed Shale Conveyor Transfer Points (included in stream 6)	N.D.	0	0	0	0	0	0	0	0	0	N.D.	0	0	0	N.D.
121*	Dust Emissions - Processed Shale Pile (included in stream 6)	N.D.	0	0	0	0	0	0	0	0	0	N.D.	0	0	0	N.D.

* Indicates streams that come into contact with the environment.

**0 = Estimated to be insignificant (less than 1 lb); N.D. = Not determined.

Source: DRI estimates based on information from Ashland Oil, Inc. and Occidental Oil Shale, Inc., October 1977, and Occidental Oil Shale, Inc. and Tenneco Shale Oil Co., April 1981.

TABLE 4.1-3. INVENTORY OF LIQUID STREAMS

Stream Number (Table No.)	Description of Stream	Mass Flow, gpm (10^3 lb/hr)	Components of Concern	Mass Flow of Component, lb/hr	Remarks[a]
12*	Mine Water	4,276-6,142	Dissolved and Suspended Solids	N.D.[b]	The water is clarified and properly treated before use in the plant.
13* (4.2-5)	Raw Shale Leachate	N.D.	Dissolved Solids Dissolved Organics	N.D.	The leachate, if any, is collected in a catchment pond, along with runoffs, and eventually used in processed shale moisturizing.
20* (4.2-37, 4.2-40, 4.2-44, 4.2-45)	Blowdown from Waste Heat Boiler	140 (70.2)	Dissolved Solids Dissolved Organics	75-78 36-39	The blowdown is further concentrated in the kettle evaporators and subsequently used in processed shale moisturizing.
24 (4.2-14)	Lurgi Light Oils to Storage	299 (136.4)	Organic - Nitrogen - Sulfur	 N.D. N.D.	Treatment may be required if on-site use as a fuel or oil upgrading is considered. Also see stream 27.
25	Light Oil Makeup to Naphtha Recovery	N.D.	Organic - Nitrogen - Sulfur	 N.D. N.D.	This is an internal recycle stream. Treatment is not necessary.
26 (4.2-14)	Lurgi Middle Oils to Storage	690 (302.9)	Organic - Nitrogen - Sulfur	 N.D. N.D.	See stream 24.
27 (4.2-14)	Lurgi Heavy Oils to Storage	306 (144.7)	Organic - Nitrogen - Sulfur	 12,000 5,000	The nitrogen and sulfur quantities include contributions from the light and middle oils. Treatment may be required if on-site use as a fuel or oil upgrading is considered.
29 (4.2-34, 4.2-35, 4.2-38)	Lurgi Gas Liquor	324 (167.2)	NH_3 H_2S Dissolved Solids Dissolved Organics	1,944 --[c] 442 261	The volatile components are removed by steam stripping. The nonvolatile components are concentrated in the kettle evaporators after raising the low-quality steam.
33 (4.2-22)	Lurgi Naphtha Product to Storage	105 (34.4)	--	--	The C_5^+ fraction (naphtha) in the Lurgi retort gas is recovered by scrubbing the gas with a lean oil.
39* (4.2-13)	MIS Heavy Oils to Storage	1,810 (911)	Organic - Nitrogen - Sulfur	 13,000 6,000	Treatment may be required if on-site use as a fuel or oil upgrading is considered.

(Continued)

TABLE 4.1-3 (cont.)

Stream Number (Table No.)	Description of Stream	Mass Flow, gpm (10^3 lb/hr)	Components of Concern	Mass Flow of Component, lb/hr	Remarks[a]
41* (4.2-10, 4.2-11, 4.2-41, 4.2-42, 4.2-43)	MIS Retort Water (Average-Maximum)	1,200-4,520 (611.5-2,303.3)	NH_3 H_2S Dissolved Inorganics Dissolved Organics	780-2,988 60-226 5,130-19,320 2,772-10,442	See stream 29.
42 (4.2-43, 4.2-44, 4.2-45)	Stripped MIS Retort Water (Average-Maximum)	1,013-3,816 (513.9-1,935.6)	NH_2 Dissolved Inorganics Dissolved Organics	30-114 5,130-19,320 2,218-8,354	Low-quality steam is produced from the stripped retort water. The volatile components end up in the steam used in the MIS retorts. NH_3 may be recovered in the MIS gas condensate. The non-volatile components are concentrated in the kettle evaporators.
44	Diesel Fuel	N.D.	Organic - Nitrogen - Sulfur	 N.D. N.D.	The middle oil fractions from the product oil are used as diesel fuel. The diesel-powered equipment is installed with catalytic converters. Additional control is not applied.
46	MIS Light Oils to Storage	203 (57.5)	--	--	The light oils condense out with the MIS gas condensate. The oils are subjected to oil/water separation, then blended with other oil products.
48 (4.2-33, 4.2-35, 4.2-38)	MIS Gas Condensate	3,716 (1,919.9)	NH_3 H_2S Dissolved Organics Dissolved Inorganics	26,650 240 1,534 520	Steam stripping removes the volatile components. The nonvolatile matter is concentrated in the kettle evaporators and eventually disposed of with the processed shale.
50 (4.2-26, 4.2-38)	Stretford Precooler Condensate (Case Study B)	331 (168.7)	NH_3 H_2S	1,020 10	The NH_3 is recovered by the Phosam-W process. The NH_3-free water is then used in producing low-quality steam.
55 (4.2-26)	Liquid Sulfur to Storage (Case Study B)	(16.6)	--	--	Stretford sulfur is reported to have +99.9% purity.
56	Stretford Chemicals (Case Study B)	(0.65)	--	--	The Holmes-Stretford mix and soda ash are added to make up the reagent losses.
57*	Stretford Spent Liquor to Reclaim (Case Study B)	N.D.	N.D.	N.D.	The liquor is shipped for off-site disposal or the useful chemicals may be reclaimed.

(Continued)

TABLE 4.1-3 (cont.)

Stream Number (Table No.)	Description of Stream	Mass Flow, gpm (10^3 lb/hr)	Components of Concern	Mass Flow of Component, lb/hr	Remarks[a]
59	Phosphoric Acid	(0.05)	--	--	This is a reagent makeup to the Phosam-W process.
62 (4.2-36, 4.2-39)	Anhydrous Ammonia to Storage	(27.7-28.6)	NH_3 Vapors	N.D.	Refrigerated storage tanks are used to reduce the NH_3 emissions.
63 (4.2-36, 4.2-37, 4.2-39, 4.2-40)	Phosam Stripped Condensate to Lurgi Waste Heat Boiler	620 (310.3)	NH_3 Dissolved Solids Dissolved Organics	146 75-78 36-39	Low-quality steam is raised for use in the MIS retorts. The blowdown is sent to the kettle evaporators for raising more steam. These uses provide the control.
64 (4.2-35, 4.2-36, 4.2-38, 4.2-39)	Phosam Stripped Condensate to MIS Absorber/Cooler Recycle	2,494 (1,248.1-1,250.0)	NH_3 Dissolved Solids Dissolved Organics	589 302-314 145-157	The NH_3 is reduced to approximately 0.05 mole % in the stripped water. A portion of this water is then recycled to the MIS absorber/cooler to scrub out NH_3 in the MIS retort gas.
65 (4.2-36, 4.2-44)	Phosam Stripped Condensate to Kettle Evaporators (Case Study A)	3,517 (1,760.3)	NH_3 Dissolved Solids Dissolved Organics	830 817 222	Low-quality steam is raised for use in the MIS retorts. The concentrated brine effluent is used in processed shale moisturizing.
66 (4.2-39, 4.2-45)	Phosam Stripped Condensate to Kettle Evaporators (Case Study B)	3,856 (1,929.8)	NH_3 Dissolved Solids Dissolved Organics	880 823 225	See stream 65.
76* (4.2-44)	Concentrate from Kettle Evaporators (Case Study A)	353 (184.0)	Dissolved Solids Dissolved Organics	5,487 1,678	The concentrate is used for processed shale quenching/moisturizing.
77* (4.2-45)	Concentrate from Kettle Evaporators (Case Study B)	692 (353.5)	Dissolved Solids Dissolved Organics	5,500 1,683	See stream 76.
78*	Blowdown from Steam Boilers	144-146	Dissolved Solids Suspended Solids	N.D. N.D.	The blowdown is used for processed shale moisturizing after equalization with other plant waste effluents.
80*	Lime Sludge from FGD (Case Study A)	670 (431.5)	Lime Sludge	96,500	The sludge contains approximately 20% solids by weight. It is used as a source of water for processed shale moisturizing.
82*	Water for Dust Palliatives	329	N.D.	N.D.	Clarified mine water is used for raw and processed shale dust control.

(Continued)

TABLE 4.1-3 (cont.)

Stream Number (Table No.)	Description of Stream	Mass Flow, gpm (10^3 lb/hr)	Components of Concern	Mass Flow of Component, lb/hr	Remarks[a]
83	Cooling Water to Lurgi-Ruhrgas Oil Recovery	N.D.	--	--	The clarified and treated mine water is used for plant cooling requirements.
84	Cooling Water to Naphtha Recovery	N.D.	--	--	See stream 83.
85	Cooling Water to MIS Retort Water Steam Stripping	N.D.	--	--	See stream 83.
86	Cooling Water to Phosam-W Unit	N.D.	--	--	See stream 83.
88*	Cooling Tower Drift (Case Study A)	15	--	--	The clarified and treated mine water is used in the cooling tower. The drift represents a loss of this water.
89	Cooling Water Makeup to MIS Humidified Air Coolers (Case Study A)	3,110	--	--	See stream 83.
90*	Blowdown from MIS Humidified Air Coolers (Case Study A)	2,038	Dissolved and Suspended Solids	N.D.	The blowdown is used as the makeup water to the FGD unit.
91*	Blowdown from Cooling Tower (Case Study A)	913	Dissolved and Suspended Solids	N.D.	See stream 90.
92	Treated Boiler Feedwater	287-292	Dissolved Solids	N.D.	The boiler feedwater is softened and demineralized before raising steam.
93*	Lurgi Processed Shale Moistening Water	191	Dissolved and Suspended Solids	N.D.	This water consists of the storm runoff and plant service water. It is subjected to oil/water separation, then used for processed shale moisturizing.
94*	Lurgi Processed Shale Moistening Water (Case Study A)	1,008	Dissolved and Suspended Solids	N.D.	Various process effluents (e.g., cooling tower blowdown, boiler blowdown, softener regeneration waste) are equalized with each other, then used for processed shale moisturizing.
95*	Processed Shale Dust Control Water	493	--	--	Clarified mine water is used for processed shale fugitive dust control.
97*	Water for Revegetation	326	--	--	Clarified mine water is used.

(Continued)

TABLE 4.1-3 (cont.)

Stream Number (Table No.)	Description of Stream	Mass Flow, gpm (10^3 lb/hr)	Components of Concern	Mass Flow of Component, lb/hr	Remarks[a]
98*	Treated Sanitary Water	27	N.D.	N.D.	Used sanitary water is biologically treated, then used for processed shale dust control.
99*	Sanitary Water Treatment Sludge	N.D.	N.D.	N.D.	Municipal sludge from the used sanitary water treatment is used as a fertilizer in the revegetation of the processed shale pile.
100	Steam Condensate from Naphtha Recovery	N.D.	--	--	High-quality steam is condensed upon use and returned to the steam boilers.
101	Steam Condensate from Phosam-W Unit	952	--	--	See stream 100.
102	Steam Condensate from Kettle Evaporators	5,514	--	--	See stream 100.
103	Steam Condensate from MIS Retort Water Steam Stripper	180	--	--	See stream 100.
104	Steam Condensate from FGD	N.D.	--	--	See stream 100.
105	Cooling Water Makeup to MIS Cooler (Case Study B)	1,811	Dissolved Solids	N.D.	Cooling water is treated to prevent deposition of solids on the equipment.
106*	Blowdown from MIS Humidified Air Coolers (Case Study B)	739	Dissolved and Suspended Solids	N.D.	The cooler blowdown is equalized with other plant effluents and used for processed shale moisturizing.
107*	Lurgi Processed Shale Moistening Water (Case Study B)	1,339	Dissolved and Suspended Solids	N.D.	Various process effluents are equalized and used for processed shale moisturizing.
108	Cooling Water Makeup to Stretford Process (Case Study B)	48	Dissolved Solids	N.D.	See stream 105.
109*	Blowdown from Stretford Humidified Air Coolers (Case Study B)	20	Dissolved and Suspended Solids	N.D.	See stream 106.
110	Process Water Makeup to Stretford Process (Case Study B)	71	--	--	The clarified and treated mine water is used as the makeup.
111	Steam Condensate from Stretford Process (Case Study B)	38	--	--	See stream 100.

(Continued)

TABLE 4.1-3 (cont.)

Stream Number (Table No.)	Description of Stream	Mass Flow, gpm (10^3 lb/hr)	Components of Concern	Mass Flow of Component, lb/hr	Remarks[a]
114*	Cooling Tower Drift (Case Study B)	16	--	--	The drift represents the water loss only. The clarified and treated mine water is used in the cooling tower.
115*	Potable/Sanitary Water	39	--	--	Properly treated mine water is used for potable and sanitary water needs.
116*	Service and Fire Water	70	--	--	Clarified mine water is used as the service and fire water.
118*	Storm Runoff	160	Dissolved Solids Dissolved Organics	--	The runoff is combined with the used service and fire water and then used for processed shale moisturizing following oil/water separation.
122* (4.2-12)	Processed Shale Leachate	N.D.	Dissolved Solids Dissolved Organics	--	The processed shale leachate, if any, is collected with the runoff and eventually reused for processed shale moisturizing.

* Indicates streams that come into contact with the environment.

[a] The remarks indicate the stream deposition. The controls and treatments applied to the streams are those specified for the Cathedral Bluffs Project.

[b] N.D. = Not determined.

[c] Dashes (--) indicate no known components of concern.

Source: DRI estimates based on information from Occidental Oil Shale, Inc. and Tenneco Shale Oil Co., April 1981.

TABLE 4.1-4. COMPOSITIONS OF LIQUID STREAMS

Stream Number (Table No.)	Stream Description	Mass Flow, gpm (10^3 lb/hr)	Components, lb/hr					
			CO_2	NH_3	H_2S	TDS & TSS	Organics	H_2O
12*	Mine Water	4,276-6,142	N.D.**	N.D.	N.D.	N.D.	N.D.	2,138,000-3,071,600
13* (4.2-5)	Raw Shale Leachate	N.D.	N.D.	N.D.	N.D.	N.D.	N.D.	N.D.
20* (4.2-37, 4.2-40, 4.2-44, 4.2-45)	Blowdown from Waste Heat Boiler	140 (70.2)	0**	0	0	75-78	36-39	70,000
24 (4.2-14)	Lurgi Light Oils to Storage	299 (136.4)	0	0	0	0	136,000	0
25	Light Oil Makeup to Naphtha Recovery	N.D.	0	0	0	0	N.D.	0
26 (4.2-14)	Lurgi Middle Oils to Storage	690 (302.9)	0	0	0	0	302,900	0
27 (4.2-14)	Lurgi Heavy Oils to Storage	306 (144.7)	0	0	0	0	144,700	0
29 (4.2-34, 4.2-35, 4.2-38)	Lurgi Gas Liquor	324 (167.2)	2,516	1,944	0	442	261	162,000
33 (4.2-22)	Lurgi Naphtha Product to Storage	105 (34.4)	0	0	0	0	34,060	340
39* (4.2-13)	MIS Heavy Oils to Storage	1,810 (911)	0	0	0	1,700	Remainder	1,000
41* (4.2-10, 4.2-11, 4.2-41, 4.2-42, 4.2-43)	MIS Retort Water (Average - Maximum)	1,200-4,520 (611.5-2,303.3)	2,748-10,350	780-2,988	60-226	5,130-19,320	2,772-10,442	600,000-2,260,000
42 (4.2-43, 4.2-44, 4.2-45)	Stripped MIS Retort Water (Average - Maximum)	1,013-3,816 (513.9-1,935.6)	0	30-114	0	5,130-19,320	2,218-8,354	506,507-1,907,843
44	Diesel Fuel	N.D.	0	0	0	0	N.D.	0
46	MIS Light Oils to Storage	203 (57.5)	0	0	0	0	57,450	0

(Continued)

TABLE 4.1-4 (cont.)

Stream Number (Table No.)	Stream Description	Mass Flow, gpm (10^3 lb/hr)	Components, lb/hr					
			CO_2	NH_3	H_2S	TDS & TSS	Organics	H_2O
48 (4.2-33, 4.2-35, 4.2-38)	MIS Gas Condensate	3,716 (1,919.9)	33,000	26,650	240	520	1,534	1,857,978
50 (4.2-26, 4.2-38)	Stretford Precooler Condensate (Case Study B)	331 (168.7)	2,332	1,020	10	0	0	165,294
55 (4.2-26)	Liquid Sulfur to Storage (Case Study B)	(16.6)	0	0	0	0	0	0
56	Stretford Chemicals (Case Study B)	(0.65)	0	0	0			
57*	Stretford Spent Liquor to Reclaim (Case Study B)	N.D.	N.D.	N.D.	N.D.	N.D.	N.D.	N.D.
59	Phosphoric Acid	(0.05)	0	0	0	0	0	N.D.
62 (4.2-36, 4.2-39)	Anhydrous Ammonia to Storage	(27.7-28.6)	0	27,654-28,639	0	0	0	N.D.
63 (4.2-36, 4.2-37, 4.2-39, 4.2-40)	Phosam Stripped Condensate to Lurgi Waste Heat Boiler	620 (310.3)	0	146	0	75-78	36-39	310,000
64 (4.2-35, 4.2-36, 4.2-38, 4.2-39)	Phosam Stripped Condensate to MIS Absorber/Cooler Recycle	2,494 (1,248.1-1,250.0)	0	589	0	302-314	145-157	1,246,770-1,248,686
65 (4.2-36, 4.2-44)	Phosam Stripped Condensate to Kettle Evaporators (Case Study A)	3,517 (1,760.3)	0	830	0	817	222	1,758,471
66 (4.2-39, 4.2-45)	Phosam Stripped Condensate to Kettle Evaporators (Case Study B)	3,856 (1,929.8)	0	880	0	823	225	1,927,919
76* (4.2-44)	Concentrate from Kettle Evaporators (Case Study A)	353 (184.0)	0	0	0	5,487	1,678	176,507
77* (4.2-45)	Concentrate from Kettle Evaporators (Case Study B)	692 (353.5)	0	0	0	5,500	1,683	346,007

(Continued)

TABLE 4.1-4 (cont.)

Stream Number (Table No.)	Stream Description	Mass Flow, gpm (10^3 lb/hr)	Components, lb/hr					
			CO_2	NH_3	H_2S	TDS & TSS	Organics	H_2O
78*	Blowdown from Steam Boilers	144-146	0	0	0	N.D.	0	72,000-73,000
80*	Lime Sludge from FGD (Case Study A)	670 (431.5)	0	0	0	96,500	0	335,000
82*	Water for Dust Palliatives	329	0	0	0	N.D.	0	164,500
83	Cooling Water to Lurgi-Ruhrgas Oil Recovery	N.D.	0	0	0	N.D.	0	N.D.
84	Cooling Water to Naphtha Recovery	N.D.	0	0	0	N.D.	0	N.D.
85	Cooling Water to MIS Retort Water Steam Stripping	N.D.	0	0	0	N.D.	0	N.D.
86	Cooling Water to Phosam-W Unit	N.D.	0	0	0	N.D.	0	
88*	Cooling Tower Drift (Case Study A)	15	0	0	0	N.D.	0	7,500
89	Cooling Water Makeup to MIS Humidified Air Coolers (Case Study A)	3,110	0	0	0	N.D.	0	1,555,000
90*	Blowdown from MIS Humidified Air Coolers (Case Study A)	2,038	0	0	0	N.D.	N.D.	1,019,000
91*	Blowdown from Cooling Tower (Case Study A)	913	0	0	0	N.D.	N.D.	456,500
92	Treated Boiler Feedwater	287-292	0	0	0	N.D.	N.D.	143,500-146,000
93*	Lurgi Processed Shale Moistening Water	191	0	0	0	N.D.	N.D.	95,500
94*	Lurgi Processed Shale Moistening Water (Case Study A)	1,008	0	0	0	N.D.	N.D.	504,000
95*	Processed Shale Dust Control Water	493	0	0	0	N.D.	N.D.	246,500
97*	Water for Revegetation	326	0	0	0	N.D.	N.D.	163,000
98*	Treated Sanitary Water	27	0	0	0	N.D.	N.D.	13,500
99*	Sanitary Water Treatment Sludge	N.D.	0	0	0	N.D.	N.D.	N.D.
100	Steam Condensate from Naphtha Recovery	N.D.	0	0	0	0	0	N.D.

(Continued)

TABLE 4.1-4 (cont.)

Stream Number (Table No.)	Stream Description	Mass Flow, gpm (10^3 lb/hr)	Components, lb/hr					
			CO_2	NH_3	H_2S	TDS & TSS	Organics	H_2O
101	Steam Condensate from Phosam-W Unit	952	0	0	0	0	0	476,000
102	Steam Condensate from Kettle Evaporators	5,514	0	0	0	0	0	2,757,000
103	Steam Condensate from MIS Retort Water Steam Stripper	180	0	0	0	0	0	90,000
104	Steam Condensate from FGD	N.D.	0	0	0	0	0	N.D.
105	Cooling Water Makeup to MIS Coolers (Case Study B)	1,811	0	0	0	N.D.	N.D.	905,500
106*	Blowdown from MIS Humidified Air Coolers (Case Study B)	739	0	0	0	N.D.	N.D.	369,500
107*	Lurgi Processed Shale Moistening Water (Case Study B)	1,339	0	0	0	N.D.	N.D.	669,500
108	Cooling Water Makeup to Stretford Process (Case Study B)	48	0	0	0	N.D.	N.D.	24,000
109*	Blowdown from Stretford Humidified Air Coolers (Case Study B)	20	0	0	0	N.D.	N.D.	10,000
110	Process Water Makeup to Stretford Process (Case Study B)	71	0	0	0	N.D.	N.D.	35,500
111	Steam Condensate from Stretford Process (Case Study B)	38	0	0	0	0	0	19,000
114*	Cooling Water Drift (Case Study B)	16	0	0	0	0	0	8,000
115*	Potable/Sanitary Water	39	0	0	0	N.D.	N.D.	19,500
116*	Service and Fire Water	70	0	0	0	N.D.	N.D.	35,000
118*	Storm Runoff	160	0	0	0	N.D.	N.D.	80,000
122* (4.2-12)	Processed Shale Leachate	N.D.	0	0	0	N.D.	N.D.	N.D.

* Indicates streams that come into contact with the environment.

**N.D. = Not determined; 0 = Estimated to be insignificant (less than 1 lb).

Source: DRI estimates based on information from Occidental Oil Shale, Inc. and Tenneco Shale Oil Co., April 1981.

TABLE 4.1-5. INVENTORY OF SOLID STREAMS

Stream Number (Table No.)	Description of Stream	Mass Flow, 10^3 lb/hr	Components of Concern	Mass Flow of Component, lb/hr	Remarks[a]
1* (4.2-4)	Raw Shale to Lurgi Retorts	5,133	Particulates	10,960	Dust collection and suppression are employed to minimize the particulate emissions from raw shale handling operations.
2* (4.2-4)	Baghouse Dusts	10.9	--[b]	--	This dust is collected from raw shale handling operations and combined with the raw shale for retorting.
17* (4.2-7, 4.2-8, 4.2-9)	Lurgi Processed Shale	4,343	Particulates Leachable Salts	N.D.[c] N.D.	The processed shale is properly moisturized to reduce dust emissions. Proper compaction should reduce water permeability, hence leaching of salts.
30	Processed Shale Dust from Lurgi Heavy Oil Dedusting	77	Adsorbed Heavy Oil	--	The dusty heavy oil is thinned and centrifuged to remove the entrained dust. The dust is then incinerated in the lift pipes along with the bulk of the processed shale.
35* (4.2-3)	Rubblized Shale in MIS Retorts	15,083	--	--	The raw shale quantity is that necessary to produce 69,000 BPSD of oil. Total raw shale in one retort is approximately 533,000 tons; in a panel of retorts, it is 51×10^6 tons. Groundwater infiltration into the rubblized retorts may cause leaching of the soluble material and contamination of the subsurface waters.
36* (4.2-6)	MIS Processed Shale (in-place)	11,421	Leachable Salts	N.D.	Groundwater infiltration may cause some leaching, hence contamination of the natural subsurface waters.
60	Caustic (NaOH)	0.1	--	--	Caustic is added to the Phosam-W process to make up the reagent losses.
81	Limestone to FGD (Case Study A)	62.6	--	--	Limestone is added to the FGD unit to make up for the losses.

* Indicates streams that come into contact with the environment.

[a] The remarks indicate the stream disposition. The controls and treatments applied to the streams are those specified for the Cathedral Bluffs Project.

[b] Dashes (--) indicate no known components of concern.

[c] N.D. = Not determined.

Source: DRI estimates based on information from Occidental Oil Shale, Inc. and Tenneco Shale Oil Co., April 1981.

TABLE 4.1-6. COMPOSITIONS OF SOLID STREAMS

Stream Number (Table No.)	Stream Description	Mass Flow, 10^3 lb/hr	Components,[a] 10^3 lb/hr					
			H	O	N	C	S	H_2O
1* (4.2-4)	Raw Shale to Lurgi Retorts	5,133	95	53	22	739	41	140
2* (4.2-4)	Baghouse Dusts	10.9	0.2	0.1	0.05	1.6	0.09	0.3
17* (4.2-7, 4.2-8, 4.2-9)	Lurgi Processed Shale	4,343	0[b]	1	1	12	35	434
30	Processed Shale Dust from Lurgi Heavy Oil Dedusting	77	0	0	0	0.40	0.70	0
35* (4.2-3)	Rubblized Shale in MIS Retorts	15,083	229	132	53	1,802	95	362
36* (4.2-6)	MIS Processed Shale (in-place)	11,421	0	0	0	274	71	0
60	Caustic (NaOH)	0.1	0	0	0	0	0	0
81	Limestone to FGD (Case Study A)	62.6	0	0	0	0	0	0

* Indicates streams that come into contact with the environment.

[a] Elements reported for organic portion of materials, except for sulfur which is total.

[b] 0 = Estimated to be insignificant (less than 1 lb).

Source: DRI estimates based on information from Occidental Oil Shale, Inc. and Tenneco Shale Oil Co., April 1981.

4.2 MAJOR STREAM COMPOSITIONS

Since this manual includes two different retorting technologies (MIS and Lurgi-Ruhrgas), two different sets of data were required for the analysis. Data on the MIS process have been published by Occidental and others based on the burns in Rooms 3E, 5 and 6 at Logan Wash (Loucks, November 1979). The retort sizes and parameters used for retorting in these pilot runs were significantly different from each other, and different results were obtained. The rubblizing and retorting technologies used in the Room 6 burn are proposed for the commercial operation at Tract C-b. Since the shale grades at Logan Wash and Tract C-b are different (15.6 and 26.7 gpt, respectively), a direct extrapolation of data from the Room 6 burn to Tract C-b may be difficult. At the present time, the only information available for the MIS technology is the Logan Wash data. Currently, Occidental is processing two additional retorts at Logan Wash, but the new data are not yet available.

Data on the Lurgi process have recently been published by Cathedral Bluffs (Occidental Oil Shale, Inc. and Tenneco Shale Oil Co., April 1981) and Rio Blanco (Rio Blanco Oil Shale Co., February 1981). The information was derived from the pilot tests performed on the shales from Tracts C-b and C-a, respectively, and it appears to be more accurate than previously published information.

Due to the differences between the two retorting processes, the products of retorting are also different, both chemically and physically. Theoretically, these differences can have an impact upon the selection of a control scheme for a specific stream, but the streams from the MIS process are much larger than parallel streams from the Lurgi process. Hence, the selection of pollution control technologies is determined largely by the quality and quantity of the MIS streams. Whenever possible, similar streams from the two processes are combined at a convenient point for treatment. The Lurgi streams, when combined with the MIS streams, have only a negligible effect on the choice, cost, or design of the treatment technologies.

In the following sections, major streams generated from different plant operations (see Section 3) are listed along with their detailed compositions. Material balances for selected streams (both before and after treatment) are also presented. When detailed information on stream compositions or performance of a control technology was not available, calculations were made on the basis of engineering analysis.

4.2.1 Material Balances

The material balances for the MIS and Lurgi-Ruhrgas retorting technologies are presented in Tables 4.2-1 and 4.2-2, respectively. These balances have been estimated primarily from information provided by Occidental Oil Shale, Inc. The gross product flow rates, retort gas compositions, etc., from the Cathedral Bluffs PSD permit application were used as supplemental information to obtain a closure on the material quantities and elemental compositions (Occidental Oil Shale, Inc. and Tenneco Shale Oil Co., April 1981).

TABLE 4.2-1. GROSS MATERIAL BALANCE FOR MIS RETORT

Material In		Flow, 10^3 lb/hr	
Raw Shale (in-place)		15,083	
Steam to Retort		1,750	
Air to Retort		6,508	
	Total In	23,341	
Material Out		**Maximum[a]**	**Average[a]**
Processed Shale (in-place)		11,432	11,421
Retort Gas		10,998	10,398
Retort Water		0	611
Crude Shale Oil[b]		911	911
	Total Out	23,341	23,341

[a] Maximum case is when the retort has reached operating temperature and there is no moisture condensation in the retort. Prior to that time, however, retort water is produced in the retort. The quantity of retort water gradually declines from a maximum value of 4,520 gpm to zero as the burn progresses. The amount of retort water produced is averaged over the entire burn period to yield the average case.

[b] The crude shale oil quantity amounts to 62,040 BPSD. An additional 6,960 BPSD of light oils are recovered later during the retort gas cooling, for a total oil production of 69,000 BPSD.

Source: DRI estimates based on information provided by Occidental Oil Shale, Inc.

Table 4.2-1 represents the gross material balance around the MIS retorts only. The raw shale quantity shown is that retorted per hour to obtain an oil yield of 69,000 BPSD. The actual quantity of shale in one retort, after creating the void space, is approximately 410,000 tons. In the commercial operation, 96 such retorts will be processed simultaneously over a period of about 220 days. The average shale grade is estimated at 26.7 gpt by Fischer assay, but the actual oil yield on retorting is 16 gpt (60% of Fischer assay).

The material balance for the Lurgi-Ruhrgas process (Table 4.2-2) includes the flue gas discharge system and product recovery. The balance is based on a production rate of 48,000 BPSD of crude shale oil (naphtha

included) from 32.7 gpt raw shale retorting at 100% of the Fischer assay yield. Air is added to the Lurgi lift pipes to cause incineration of the residual organic matter on the processed shale. The makeup water includes the amounts necessary to cool as well as moisturize the processed shale.

TABLE 4.2-2. GROSS MATERIAL BALANCE FOR LURGI RETORT

Material In	Flow, 10^3 lb/hr
Raw Shale	5,144
Air to Lift Pipe	2,498
Makeup Water*	1,111
Total In	8,753
Material Out	**Flow, 10^3 lb/hr**
Processed Shale (with 10% moisture)	4,343
Retort Gas (naphtha-free)	154
Gas Liquor	167
Product Oil	584
Naphtha	34
Flue Gas	3,471
Total Out	8,753

* The makeup water includes 677 × 10^3 lb/hr for processed shale quenching and 434 × 10^3 lb/hr for processed shale moisturizing to a moisture content of 10% by weight.

Source: DRI estimates based on information provided by Occidental Oil Shale, Inc.

4.2.2 Raw Oil Shale

Preparation of MIS retorts requires mining approximately 23% of the shale to allow for expansion on rubblization and retorting. This mined shale, along with material removed from connecting drifts, is then processed by Lurgi surface retorts. To take maximum advantage of the higher oil yield from the Lurgi process, the MIS retorts are located in a manner that allows richer oil shale to be mined out for the Lurgi process. Thus, rubblized

shale in the MIS retorts averages 26.7 gpt, while the shale feed to the Lurgi retorts assays about 32.7 gpt. Since actual chemical analyses of these shales are not available, the published analyses of various grades of shales from the Green River Formation have been used here (Stanfield, et al., 1951). Compositions assumed for the raw shale for MIS and Lurgi retorting are presented in Tables 4.2-3 and 4.2-4, respectively. The moisture contents for the two shales have been calculated from the material balances.

TABLE 4.2-3. COMPOSITION OF RAW SHALE IN MIS RETORTS*
(Stream 35)

Component	Weight Percent	Mass Flow, 10^3 lb/hr	Flow, 10^3 lb-moles/hr
Raw Shale (in-place)	100.00	15,083	--
Hydrogen (organic)	1.52	229	227
Moisture	2.40	362	20
Oxygen (organic)	0.88	132	8.3
Nitrogen (organic)	0.35	53	3.8
Carbon (organic)	11.95	1,802	150
Sulfur (total)	0.63	95	3.0

* Based on 69,000 BPSD crude shale oil at 60% Fischer assay yield with 26.7 gpt oil shale.

Source: DRI estimates based on information from Stanfield, et al., 1951.

TABLE 4.2-4. COMPOSITION OF RAW SHALE FOR LURGI RETORTS*
(Streams 1, 2)

Component	Weight Percent	Mass Flow, 10^3 lb/hr	Flow, 10^3 lb-moles/hr
Raw Shale	100.00	5,144	--
Hydrogen (organic)	1.85	95	94
Moisture	2.72	140	7.8
Oxygen (organic)	1.03	53	3.3
Nitrogen (organic)	0.43	22	1.6
Carbon (organic)	14.41	741	62
Sulfur (total)	0.80	41	1.3

* Based on 48,000 BPSD crude shale oil at 100% Fischer assay yield with 32.7 gpt oil shale. Baghouse dusts are included.

Source: DRI estimates based on information from Stanfield, et al., 1951.

Raw Shale Leachates--

Recently, some literature on column leaching of Colorado raw oil shales has been published (McWhorter, 1980). Although the quality of field leachate may not be identical to the leachates obtained from laboratory leaching columns, the results from this reference are presented in Table 4.2-5.

4.2.3 Processed Shale

Proper rubblization of the MIS retort is very important in obtaining maximum oil yield and uniform retorting throughout the retort (Ricketts, 1980). Under optimum conditions, approximately one-half of the carbon in the Fischer assay residue remains in the MIS processed shale. Due to the high temperature in the flame front, the residual organic matter is coked; therefore, only minor amounts of organic hydrogen, nitrogen, sulfur, etc., are expected to remain in the processed shale. The composition of the MIS processed shale, as obtained by the material and elemental balances, is presented in Table 4.2-6. This is representative of the expected composition. The mineral composition of the processed shale is not known; based on the material and elemental balances, the carbonate decomposition is estimated to be about 40% of the available carbonates. Information on the physical properties of the MIS processed shale is not available.

The composition of the Lurgi processed shale, also obtained by the material and elemental balances, is given in Table 4.2-7. Due to burning of the processed shale in the lift pipes and extensive recycling to the retort, residual organic matter is very low. The moisture content is that resulting from the use of water for quenching and moistening to 10% moisture. Major inorganic elements in the Lurgi processed shale have been determined and are presented as oxides in Table 4.2-8 (Woodward-Clyde Consultants, October 13, 1980). The carbonate decomposition is determined to be about 30% by the material and elemental balances. Some physical properties of the processed shale also have been determined by Woodward-Clyde Consultants, and they are presented in Table 4.2-9. Due to partial calcination in the lift pipes, the processed shale has good cementitious properties. The unconfined compressive strength, at optimum moisture content and curing period, is high and permeability is very low.

Processed Shale Leachates--

Available information on leachate from MIS processed shale is presented in Tables 4.2-10 and 4.2-11 (Stollenwerk, 1980, and U.S. DOE, May 1980, respectively). The data are for the sample cores from the Room 3E burn at Logan Wash and may not be representative of the species that can be leached out at Tract C-b (i.e., the grade of shale and operating conditions at the tract will be different). The groundwater will be drawn down during the life of the project, and this reduces the potential for groundwater infiltration into the spent retorts.

The results from column leaching of the Lurgi processed shale are given in Table 4.2-12 (Woodward-Clyde Consultants, October 13, 1980). Some soluble elements are reported as their oxides. As seen in Table 4.2-9, the

TABLE 4.2-5. LABORATORY COLUMN LEACHATES FROM SOME COLORADO RAW OIL SHALES
(Stream 13)

Component	Unit	USBM Raw Shale (Saline Zone)	Colony Raw Shale	C-a R-5/Mahog. Shale	C-a Composite	Raw Colony Shale (Weathered)	Colony Soil	C-b Soil	Drinking Water Criteria
Al	mg/l	0.34 - 7.54	0.05 - 0.75	0.3 - 3.53	<0.05 - 0.69	<0.05 - 0.17	<0.05 - 0.37	<0.05	--
As	"	<0.005	<0.005	<0.005	<0.005	<0.005	<0.005	<0.005	0.05
B	"	0.24 - 43	<0.025 - 2.75	<0.025 - 0.59	<0.025 - 1.97	0.12 - 0.365	0.47 - 0.76	0.65 - 0.985	--
Ba	"	0.061 - 0.17	0.07 - 0.48	0.088 - 0.27	0.027 - 0.22	0.088 - 0.495	0.12 - 0.57	0.038 - 0.240	1.0
Be	"	<0.025	<0.025	<0.025	<0.025	<0.025	<0.025	<0.025	--
Ca	"	36 - 750	40 - 1,550	180 - 1,510	18 - 970	25 - 500	40 - 960	6.5 - 330	--
Cl	"	<1.0 - 560	1.1 - 22	1.9 - 300	0.3 - 130	0.8 - 71	0.1 - 200	1.8 - 520	--
CO_3	"	0.1 - 1.1	0.03 - 1.6	<0.1 - 346	0.3 - 0.7	0.12 - 1.03	0.17 - 2.9	1.0 - 8.8	--
Cr	"	<0.025 - 0.68	<0.025 - 0.04	0.022 - 0.034	<0.025 - 0.043	<0.025	<0.025	<0.025 - 0.069	0.05
Cu	"	<0.025 - 0.30	<0.025 - 0.41	<0.025 - 0.69	<0.025 - 0.44	<0.039 - 0.31	0.075 - 0.38	<0.025 - 0.28	1.0
EC	µmhos/cm	280 - 13,000	240 - 5,400	1,900 - 37,000	125 - 8,200	240 - 4,200	370 - 9,000	840 - 3,000	--
F	mg/l	9.5 - 75	4.0 - 7.2	0.8 - 65	<0.5 - 3.0	4.0 - 8.7	1.2 - 10	4.5 - 25	1.8
Fe	"	0.01 - 1.8	<0.03 - 0.89	<0.1	<0.1	<0.03 - 0.08	<0.01 - 0.52	0.1 - 0.42	0.3
HCO_3	"	83.1 - 321	50 - 558	3.0 - 403	82 - 1,026	136 - 233	152 - 480	481 - 846	--
Hg	"	<0.0001 - 0.0035	<0.0005	<0.0001	<0.0001	<0.0005	<0.0005	<0.0001	0.002
K	"	1.1 - 22	1.7 - 59	8.2 - 640	0.4 - 34	0.83 - 57	25 - 270	1.3 - 22	--
Li	"	0.02 - 3.1	0.02 - 0.151	0.02 - 0.11	<0.02 - 0.79	0.004 - 0.02	0.03 - 0.47	0.02 - 0.08	--
Mg	"	6.7 - 1,050	5.5 - 140	0.675 - 108	4.9 - 820	17 - 365	17 - 1,450	2.6 - 145	--
Mn	"	0.075 - 3.2	0.074 - 2.74	<0.05 - 0.35	<0.05 - 0.40	0.05 - 0.11	<0.05 - 0.97	<0.05 - 0.16	0.05
MO	"	0.09 - 0.87	0.09 - 0.65	0.10 - 5.18	0.10 - 2.2	0.075 - 0.74	<0.05 - 0.84	<0.05 - 0.43	--
Na	"	<25 - 1,430	5.8 - 145	27 - 7,710	4.3 - 1,240	14 - 350	3.8 - 340	210 - 2,050	--
Ni	"	<0.025 - 0.60	<0.05 - 0.10	0.047 - 0.085	<0.05 - 0.16	<0.05 - 0.06	<0.05 - 0.07	<0.05 - 0.075	--
NO_3	"	<1.25 - 40	0.9 - 25	4 - 172	<0.5 - 140	<0.3 - 245	<0.2 - 180	1.4 - 30	10
Pb	"	<0.04 - 1.9	<0.05 - 0.64	<0.05 - 0.83	<0.05 - 0.77	0.12 - 0.35	0.12 - 0.38	0.07 - 0.31	0.05
pH	--	6.8 - 8.06	7.06 - 8.18	6.93 - 11.98	7.03 - 7.99	6.93 - 8.11	7.1 - 8.2	7.43 - 8.49	--
Se	mg/l	<0.01	<0.01	<0.005	<0.005	<0.01	<0.01	<0.005	0.01
Si	"	1.65 - 9.7	2.12 - 10.58	1.2 - 23.28	5.8 - 19.58	6.71 - 14.72	8.0 - 16.8	11.0 - 20.7	--
Sn	"	<0.025 - 1.28	0.12 - 0.67	--	--	0.041 - 0.67	<0.025 - 1.37	--	--
SO_4	"	20 - 5,700	28 - 5,150	5 - 6,600	7.9 - 6,100	15 - 2,650	60 - 4,200	23 - 860	250
TDS	"	70 - 13,300	110 - 7,160	610 - 30,130	164 - 9,450	120 - 4,760	250 - 7,450	1,050 - 3,760	500
Zn	"	0.01 - 6.8	<0.02 - 0.68	<0.01 - 0.09	<0.02 - 1.5	0.07 - 0.3	0.01 - 0.65	0.04 - 0.35	5.0

Source: McWhorter, 1980.

TABLE 4.2-6. COMPOSITION OF MIS PROCESSED SHALE
(Stream 36)

Component	Weight Percent	Mass Flow, 10^3 lb/hr	Flow, 10^3 lb-moles/hr
Processed Shale (in-place)	100.00	11,421	--
Carbon (organic)	2.40	274	23
Sulfur (total)	0.62	71	2.2

Source: DRI estimates based on information provided by Occidental Oil Shale, Inc.

TABLE 4.2-7. COMPOSITION OF LURGI PROCESSED MOISTURIZED SHALE
(Stream 17)

Component	Weight Percent	Mass Flow, 10^3 lb/hr	Flow, 10^3 lb-moles/hr
Retorted Shale (moisturized)	100.00	4,343	--
Moisture	10.00	434	24.1
Oxygen (organic)	0.02	1	0.1
Nitrogen (organic)	0.02	1	0.1
Carbon (organic)	0.27	12	1.0
Sulfur (total)	0.79	35	1.1

Source: DRI estimates based on information provided by Occidental Oil Shale, Inc.

TABLE 4.2-8. INORGANIC ANALYSIS OF LURGI PROCESSED SHALE
(Stream 17)

Component	Weight Percent
Silicon Dioxide	46.00
Iron Oxides	4.40
Aluminum Oxide	12.70
Calcium Oxide	22.40
Magnesium Oxide	4.80
Sulfate	3.80
Sodium Oxide	3.20
Potassium Oxide	2.70
Carbonate	4.40
Chloride	0.08
Loss on Ignition	4.60

Source: Woodward-Clyde Consultants, October 13, 1980.

TABLE 4.2-9. PHYSICAL PROPERTIES OF LURGI RETORTED SHALE
(Stream 17)

Test Condition	Maximum Particle Size, in.	Gradation: % Clay (0.005 mm)	Gradation: % Silt (-200 mesh - 0.005 mm)	Gradation: % Sand (4 - 200 mesh)	Gradation: % Gravel (+4 mesh)	Remarks	Compaction: Specific Gravity	Compaction: % Optimum Moisture	Compaction: Maximum Density, PCf	Permeability ft/yr: Load, 50 psi	Permeability ft/yr: Load, 100 psi	Permeability ft/yr: Load, 200 psi	Shear Strength, Triaxial Shear: Friction Coefficient, Tan Ø	Shear Strength, Triaxial Shear: Internal Angle of Friction, °	Shear Strength, Triaxial Shear: Cohesion, psi	Shear Strength, Triaxial Shear: Saturated Cohesion, psi	Shear Strength, Unconfined: Days Cured @ 120°F	Shear Strength, Unconfined: Unconfined Compression, psi
As Received	3/8	17.1	47.8	33.4	1.7		2.83											
	3/8	15.3	46.4	36.6	1.7		2.84											
Compacted	--	16.2	48.2	35.6	0.0	Initial		30.3	85.6	0.002	0.003	--	0.69	34.5	22.2	7.6	0	28.8
1/2 D 698	--	17.6	44.2	38.2	0.0	After Compaction											0	33.1
(6,200 ft-lbs)	--	15.5	37.9	46.6	0.0	After Triaxial											7	590.7
		15.5	37.9	46.6	0.0	Shear Test											7	785.9
																	14	575.0
																	14	682.4
																	28	--
																	28	--
Compacted	--	16.2	48.2	35.6	0.0	Initial		28.5	88.2	0.003	0.005	--	0.62	32.0	33.3	13.9	0	38.5
D 698	--	18.8	44.2	37.0	0.0	After Compaction											0	42.5
(12,375 ft-lbs)	--	8.8	42.5	48.7	0.0	After Triaxial											7	874.5
						Shear Test											7	865.5
																	14	940.8
																	14	912.1
																	28	1,222.2
																	28	1,222.1
Compacted	--	16.2	48.2	35.6	0.0	Initial		23.2	96.8	0.001	0.001	--	0.80	38.5	41.0	27.8	0	378.5
D 1557	--	0.1	56.3	43.6	0.0	After Compaction											0	350.8
(56,250 ft-lbs)	--	12.8	45.9	41.3	0.0	After Triaxial											7	971.1
						Shear Test											7	1,182.6
																	14	986.5
																	14	1,081.0
																	28	--
																	28	--

Source: Woodward-Clyde Consultants, October 13, 1980.

TABLE 4.2-10. CONCENTRATIONS OF DISSOLVED SPECIES IN THE LEACHATE FROM MIS PROCESSED SHALE (Stream 41)

Ore Sample Number	Constituent Concentration, mg/l								
	F	B	Mo	As	Se	S_2O_3	SO_4	Ca	TDS
1	1.2	3.5	2.4	0.01	0.02	0	990	16	2,370
2	2.0	2.1	0.9	0.09	0.02	0	2,970	250	4,700
3	6.0	2.6	8.8	0.16	0.10	260	5,340	180	8,250
4	11.0	7.6	5.6	0.03	0.15	210	6,530	920	10,300

Source: Stollenwerk, 1980.

TABLE 4.2-11. COMPARISON OF CONCENTRATION RANGE OF MACRO IONS FOUND IN FIRST FRACTION OF LEACHATES FROM OCCIDENTAL'S MIS CORE SAMPLES AND ABOVEGROUND RETORTED SHALE
(Stream 41)

Parameter	Range of Components	
	MIS Core/Samples	Aboveground Retorted Shale*
Quantity of Shale in Column (g)	4.0-7.7	3.3-5.5
Column Volume Collected (v/vo)	0.28-1.11	0.41-0.67
pH	7.75-10.6	10.6-12.2
Conductivity (μmho/cm)	1,300-15,000	7,600-11,500
Organic C (μg/ml)	152-2,455	94-205
Inorganic C (as CO_3) (μg/ml)	30-280	36-170
Boron (μg/ml)	1.9-46	3.9-8.5
Calcium (mg/ml)	11-513	4-281
Magnesium (μg/ml)	0.5-265	<0.5-0.8
Potassium (μg/ml)	70-3,360	440-830
Sodium (μg/ml)	370-14,400	4,800-8,100
Lithium (μg/ml)	0.2-87	8.4-16.2
Strontium (μg/ml)	0.7-10.8	2.4-8.4
Silicon (μg/ml)	5.4-122	15-49
Zinc (μg/ml)	<0.01-0.48	<0.01-0.06

* The origin of the aboveground retorted sample is not specified.

Source: U.S. DOE, May 1980.

properly moistened and compacted Lurgi processed shale has low permeability; therefore, actual field leaching may not be represented by laboratory column leaching experiments.

TABLE 4.2-12. ANALYSIS OF LEACHATE FROM LURGI PROCESSED SHALE (Stream 122)

Component	Concentration, mg/l
Silicon Dioxide	18
Iron Oxides	<0.01
Aluminum Oxide	<0.1
Calcium Oxide	1,080
Magnesium Oxide	102
Sodium Oxide	337
Potassium Carbonate	37
Carbonate	90
Bicarbonate	<0.1
Chloride	28
Sulfate	1,810
Hydroxide	222
Total Dissolved Solids	3,530
pH = 11.4	

Source: Woodward-Clyde Consultants, October 13, 1980.

4.2.4 Crude Shale Oil

Properties of the shale oil produced from the Room 6 burn at Logan Wash are presented in Table 4.2-13. Since the quality of oil is largely dependent upon the retorting process, and less on the origin or the grade of the raw shale, similar properties may be expected for the crude oil from the commercial MIS operation at Tract C-b.

TABLE 4.2-13. PROPERTIES OF MIS CRUDE SHALE OIL[a]
(Stream 39)

Parameter	Value
% Carbon	84.24
% Hydrogen	11.77
% Oxygen	1.09
% Nitrogen	1.42
% Sulfur	0.65
% BS & W	0.30
% Asphaltene	0.53
API Gravity at 60°F	23.3
Pour Point, °F	60
Viscosity, CST at 100°F	39.17
Cleveland Open Cup Flash Point, °F	220
Cleveland Open Cup Fire Point, °F	230
Penske-Martin Flash Point, °F	185
Heating Value, Btu/lb	18,800
Volume % distilled at, °F	
First drop	376.2
5%	466.8
10%	505.2
20%	562.6
30%	613.0
40%	660.4
50%	716.0
60%	769.8
70%	822.6
80%	876.2
90%	922.2
Flow,[b] 10^3 lb/hr (BPSD)	911 (62,040)

[a] The values at 15,000 barrels cumulative point in the Room 6 burn at Logan Wash are used here. The oil production seems optimum at that time.

[b] Excludes light oils recovered in the MIS gas absorber/cooler.

Source: Loucks, November 1979.

Table 4.2-14 shows the properties of crude oil from Lurgi processing. Since the Lurgi retort module includes three condensation-absorption towers, a product breakdown into heavy, middle, and light oils fractions occurs. The API gravities and boiling points for each of the fractions have been estimated from published information (Schmalfeld, July 1975) and from data provided by Cathedral Bluffs. However, later information provided by Lurgi indicates that the combined crude oil is somewhat heavier (~19°API) than the value given in the table.

4.2.5 Retort Gas

The composition and quantity of retort gas from MIS processing is given in Table 4.2-15 (Occidental Oil Shale, Inc. and Tenneco Shale Oil Co., April 1981). The retort gas is made up of over 95% (by weight) inert components which do not contribute to the heating value of the gas. Thus, the net heating value for the gas is very low. Approximately 5% of the sulfur is present as non-H_2S species such as CS_2, COS and CH_3SH. The amounts of H_2S and NH_3 are significant enough to warrant their recoveries. Ammonia is removed from the gas in the gas condensate during cooling of the retort gas in the absorber/cooler. The gas condensate is eventually fed to the Phosam-W ammonia recovery unit for recovery of anhydrous ammonia as a by-product. A portion of the stripped condensate from the Phosam-W unit is recycled as the wash water to the absorber/cooler. The estimated composition of the water-scrubbed gas thus obtained is presented in Table 4.2-16. Approximately 6,960 BPSD of light oils are also condensed and recovered during the retort gas scrubbing.

Tables 4.2-17 through 4.2-19 present the estimated composition of the retort vapors from the Lurgi retorts at different points in the process. The total retort vapors (without the entrained dust) are presented in Table 4.2-17. The vapor cooling and scrubbing in the first scrubber tower removes the heavy oils along with the entrained dust. Similarly, the middle oils are condensed in the second scrubber tower. Table 4.2-18 represents the vapors after the middle oils have been condensed, but the light oils and water still remain in vapor form. The gas composition after condensation of the light oils and gas liquor in the third scrubber tower is given in Table 4.2-19. Finally, the residual condensable hydrocarbons (naphtha) are removed in the lean oil absorber to produce a so-called naphtha-free retort gas, as presented in Table 4.2-20. The reported composition of this gas is presented in Table 4.2-21 (Occidental Oil Shale, Inc. and Tenneco Shale Oil Co., April 1981). Significant differences in the quantity and composition are noticeable between the estimated and reported naphtha-free retort gas. The estimated composition of naphtha is presented in Table 4.2-22.

In Case Study A, the MIS and Lurgi retort gases are burned in the steam boilers without additional treatment. The resulting flue gas is then desulfurized to reduce the SO_2 emissions. In Case Study B, the removal of H_2S by the Stretford process is considered before the gases are burned. In order to treat the gases, it is necessary to cool the MIS retort gas to the operating temperature of the Stretford unit. This is done in a precooler, and the composition of the MIS gas after treatment is given in Table 4.2-23. The water condensed in the precooler dissolves a significant portion of the

TABLE 4.2-14. PROPERTIES OF NAPHTHA-FREE SHALE OIL FROM LURGI RETORTING
(Streams 24,26,27)

Component	Boiling Point, °F	Volume Percent (BPSD)	Gravity, °API	Weight Percent	Mass Flow, 10^3 lb/hr	Flow, 10^3 lb-moles/hr
Heavy Oils (Stream 27)	~360-920	23.65 (10,500)	18.5	24.78	144.72	--
Middle Oils (Stream 26)	~270-920	53.27 (23,650)	30	51.87	302.92	--
Light Oils* (Stream 24)	~290-510	23.08 (10,250)	24	23.35	136.36	--
TOTAL SHALE OIL	~270-920	100.00 (44,400)	25.5	100.00	584.00	--
Composition						
Hydrogen	--	--	--	11.47	67.00	67.00
Oxygen	--	--	--	1.37	8.00	0.50
Nitrogen	--	--	--	2.05	12.00	0.86
Carbon	--	--	--	84.25	492.00	41.00
Sulfur	--	--	--	0.86	5.00	0.16

* The light oils are stabilized. API gravity for the light oils before stabilization is 36.5°.

Source: DRI estimates based on information provided by Occidental Oil Shale, Inc.

TABLE 4.2-15. COMPOSITION OF MIS RETORT GAS*
(Stream 38)

Component	MWt	Dry Basis Mass %	Dry Basis Mole %	Wet Basis Mass %	Wet Basis Mole %	Mass Flow, 10^3 lb/hr	Mass Flow, (10^3 SCFM)	Flow, lb-moles/hr
H_2	2	0.64	9.40	0.50	6.50	55.04	(174.05)	27,519.5
CO	28	1.66	1.75	1.30	1.21	143.49	(32.41)	5,124.5
CO_2	44	37.19	24.97	29.26	17.28	3,217.63	(462.50)	73,128.0
N_2	28	57.48	60.64	45.21	41.96	4,972.36	(1,123.14)	177,584.4
NH_3	17	0.33	0.58	0.26	0.40	28.87	(10.74)	1,698.4
H_2S	34	0.20	0.17	0.16	0.12	17.29	(3.22)	508.6
CH_4	16	0.87	1.61	0.69	1.11	75.44	(29.82)	4,715.3
C_2H_4	28	0.11	0.12	0.09	0.08	9.82	(2.22)	350.8
C_2H_6	30	0.26	0.26	0.20	0.18	22.54	(4.75)	751.3
C_3H_6	42	0.11	0.08	0.09	0.06	9.82	(1.48)	233.9
C_3H_8	44	0.18	0.12	0.14	0.08	15.44	(2.22)	350.8
C_4^+	72.35	0.28	0.11	0.22	0.08	24.32	(2.13)	336.1
Light Oils	110.71	0.66	0.18	0.52	0.12	57.45	(3.28)	518.9
COS	60	0.01	0.005	0.01	0.003	0.88	(0.09)	14.6
CS_2	76	0.002	0.001	0.002	0.001	0.22	(0.02)	2.9
CH_3SH	48	0.003	0.002	0.003	0.001	0.28	(0.04)	5.9
H_2O	18	--	--	21.34	30.81	2,347.47	(824.81)	130,415.0
TOTAL		99.98	100.00	100.00	100.00	10,998.33	(2,684.46)	423,258.9
MWt		29.54		25.98				
Total H (excluding H_2O)		1.18		0.93		101.94		
Total O (excluding H_2O)		28.00		22.02		2,422.32		
Total N		57.75		45.43		4,996.14		
Total C		12.87		10.12		1,113.37		
Total S		0.20		0.16		17.12		
Heating Value, LHV Btu/lb (Btu/SCF)		949 (74)		747 (51)				

* The composition given is for the retort gas at an exit temperature above 131°F. Before this temperature is attained, some water will condense in the retort.

Source: Occidental Oil Shale, Inc. and Tenneco Shale Oil Co., April 1981.

TABLE 4.2-16. COMPOSITION OF MIS RETORT GAS AFTER ABSORBER/COOLER
(Stream 45)

Component	MWt	Mass %	Mole %	Mass Flow, 10^3 lb/hr	(10^3 SCFM)	Flow, lb-moles/hr
H_2	2	0.61	8.68	55.04	(174.05)	27,519.5
CO	28	1.59	1.62	143.49	(32.41)	5,124.5
CO_2	44	35.29	22.82	3,184.63	(457.76)	72,378.0
N_2	28	55.11	55.99	4,972.36	(1,123.14)	177,584.4
NH_3	17	0.02	0.04	2.22	(0.82)	130.4
H_2S	34	0.19	0.16	17.05	(3.17)	501.6
CH_4	16	0.84	1.49	75.44	(29.82)	4,715.3
C_2H_4	28	0.11	0.11	9.82	(2.22)	350.8
C_2H_6	30	0.25	0.24	22.54	(4.75)	751.3
C_3H_6	42	0.11	0.07	9.82	(1.48)	233.9
C_3H_8	44	0.17	0.11	15.44	(2.22)	350.8
C_4^+	72.35	0.27	0.11	24.32	(2.13)	336.1
COS	60	0.0097	0.0046	0.88	(0.09)	14.6
CS_2	76	0.0024	0.0009	0.22	(0.02)	2.9
CH_3SH	48	0.0031	0.0019	0.28	(0.04)	5.9
H_2O	18	5.42	8.57	489.49	(171.99)	27,194.0
TOTAL		100.00	100.00	9,023.04	(2,006.15)	317,194.0
MWt		28.45				
Total H (excluding H_2O)		0.99		89.59		
Total O (excluding H_2O)		26.58		2,398.32		
Total N		55.13		4,974.19		
Total C		11.69		1,054.56		
Total S		0.19		16.89		
Heating Value, LHV Btu/lb (Btu/SCF)		732 (55)				

Source: DRI estimates based on information from Occidental Oil Shale, Inc. and Tenneco Shale Oil Co., April 1981.

TABLE 4.2-17. COMPOSITION OF LURGI RETORT VAPORS
(Stream 16)

Component*	MWt	Mass %	Mole %	Mass Flow, 10^3 lb/hr	Flow, lb-moles/hr
H_2	2	0.39	9.43	3.65	1,826.0
CO	28	0.56	0.97	5.24	187.3
CO_2	44	7.79	8.58	73.15	1,662.6
N_2	28	0.56	0.97	5.24	187.3
NH_3	17	0.22	0.64	2.11	124.2
H_2S	34	0.09	0.13	0.88	25.8
SO_2	64	0.03	0.02	0.27	4.2
CH_4	16	1.48	4.49	13.91	869.6
C_2H_4	28	0.96	1.66	8.99	321.1
C_2H_6	30	0.98	1.59	9.23	307.7
C_3H_6	42	1.23	1.42	11.52	274.2
C_3H_8	44	0.66	0.73	6.18	140.5
C_4H_8	56	1.08	0.93	10.11	180.6
C_4H_{10}	58	0.33	0.28	3.10	53.5
C_4^+	79.4	1.87	1.14	17.52	220.8
Light Oils	114	16.13	6.86	151.50	1,329.0
Middle Oils	166	32.40	9.46	304.32	1,833.3
Heavy Oils	274	15.41	2.73	144.72	528.2
Miscellaneous HC	132.6	0.03	0.01	0.26	2.0
H_2O	18	17.81	47.97	167.25	9,291.4
TOTAL		100.01	100.01	939.15	19,369.3
MWt		48.49			

* Approximately 77 x 10^3 lb/hr of the shale dust are entrained in the vapors but not included in the table.

Source: DRI estimates based on information provided by Occidental Oil Shale, Inc.

TABLE 4.2-18. COMPOSITION OF LURGI RETORT GAS AFTER MIDDLE OILS SCRUBBER (Stream 22)

Component	MWt	Mass %	Mole %	Mass Flow, 10^3 lb/hr	Flow, lb-moles/hr
H_2	2	0.74	10.73	3.65	1,826.0
CO	28	1.07	1.10	5.24	187.3
CO_2	44	14.88	9.77	73.15	1,662.6
N_2	28	1.07	1.10	5.24	187.3
NH_3	17	0.43	0.73	2.11	124.2
H_2S	34	0.18	0.15	0.88	25.8
SO_2	64	0.05	0.02	0.27	4.2
CH_4	16	2.83	5.11	13.91	869.6
C_2H_4	28	1.83	1.89	8.99	321.1
C_2H_6	30	1.88	1.81	9.23	307.7
C_3H_6	42	2.34	1.61	11.52	274.2
C_3H_8	44	1.26	0.83	6.18	140.5
C_4H_8	56	2.06	1.06	10.11	180.6
C_4H_{10}	58	0.63	0.31	3.10	53.5
C_4^+	79.4	3.57	1.30	17.52	220.8
Light Oils	114	30.82	7.81	151.50	1,329.0
Middle Oils	166	0.29	0.05	1.40	8.5
Miscellaneous HC	132.6	0.05	0.01	0.26	2.0
H_2O	18	34.02	54.60	167.25	9,291.4
TOTAL		100.00	99.99	491.51	17,016.3
MWt		28.29			

Source: DRI estimates based on information provided by Occidental Oil Shale, Inc.

TABLE 4.2-19. COMPOSITION OF LURGI RETORT GAS AFTER LIGHT OILS SCRUBBER (Stream 23)

Component	MWt	Mass %	Mole %	Mass Flow, 10^3 lb/hr	Flow, lb-moles/hr
H_2	2	1.94	27.28	3.65	1,826.0
CO	28	2.79	2.80	5.24	187.3
CO_2	44	37.57	23.99	70.64	1,605.4
N_2	28	2.79	2.80	5.24	187.3
NH_3	17	0.02	0.03	0.04	2.2
H_2S	34	0.47	0.39	0.88	25.8
SO_2	64	0.01	0.01	0.02	0.4
CH_4	16	7.40	12.99	13.91	869.6
C_2H_4	28	4.78	4.80	8.99	321.1
C_2H_6	30	4.91	4.60	9.23	307.7
C_3H_6	42	6.13	4.10	11.52	274.2
C_3H_8	44	3.29	2.10	6.18	140.5
C_4H_8	56	5.38	2.70	10.11	180.6
C_4H_{10}	58	1.65	0.80	3.10	53.5
C_4^+	79.40	9.32	3.30	17.52	220.8
Heavy Ends	81.69	8.80	3.03	16.53	202.5
H_2O	18	2.75	4.30	5.18	287.5
TOTAL		100.00	100.02	187.98	6,692.5
MWt		28.09			
Total H (excluding H_2O)		10.24		19.25	19,250
Total O (excluding H_2O)		28.92		54.37	3,399
Total N		2.81		5.27	377
Total C		54.83		103.07	8,590
Total S		0.45		0.84	26

Source: DRI estimates based on information provided by Occidental Oil Shale, Inc.

TABLE 4.2-20. COMPOSITION OF NAPHTHA-FREE LURGI RETORT GAS
(Stream 31)

Component	MWt	Mass %	Mole %	Mass Flow, 10^3 lb/hr	Flow, lb-moles/hr
H_2	2	2.38	29.22	3.65	1,826.0
CO	28	3.41	3.00	5.24	187.3
CO_2	44	45.99	25.69	70.64	1,605.4
N_2	28	3.41	3.00	5.24	187.3
NH_3	17	0.02	0.04	0.04	2.2
H_2S	34	0.57	0.41	0.88	25.8
SO_2	64	0.02	0.01	0.02	0.4
CH_4	16	9.06	13.91	13.91	869.6
C_2H_4	28	5.85	5.14	8.99	321.1
C_2H_6	30	6.01	4.92	9.23	307.7
C_3H_6	42	7.50	4.39	11.52	274.2
C_3H_8	44	4.02	2.25	6.18	140.5
C_4H_8	56	6.58	2.89	10.11	180.6
C_4H_{10}	58	2.02	0.86	3.10	53.5
H_2O	18	3.15	4.30	4.83	268.6
TOTAL		99.99	100.03	153.58	6,250.2
MWt		24.58			
Total H (excluding H_2O)		9.81		15.06	
Total O (excluding H_2O)		35.41		54.38	
Total N		3.43		5.27	
Total C		47.66		73.20	
Total S		0.55		0.84	
Heating Value, LHV Btu/lb (Btu/SCF)			9,790 (616)		

Source: DRI estimates based on information provided by Occidental Oil Shale, Inc.

TABLE 4.2-21. REPORTED ANALYSIS OF NAPHTHA-FREE LURGI RETORT GAS
(Stream 31)

Component	Flow, lb-moles/hr
H_2	2,336.9
N_2	230.0
NH_3	18.5
CO	200.3
C_1	1,112.9
$C_2^=$	333.9
C_2	400.6
CO_2	1,868.1
H_2S	5.2
$C_3^=$	341.3
C_3	215.2
C_4	356.1
H_2O	--
TOTAL	7,419

Mass Flow, lb/hr = 185,616.0
Flow, MMSCFD = 67.58
Temperature, °F = 95
Pressure, psia = 12.7

Source: Occidental Oil Shale, Inc. and Tenneco Shale Oil Co., April 1981.

TABLE 4.2-22. COMPOSITION OF LURGI NAPHTHA
(Stream 33)

Component	MWt	Mass %	Mole %	Mass Flow, 10^3 lb/hr	Flow, lb-moles/hr
C_5H_{12}	72	25.19	27.22	8.67	120.4
C_6H_6	78	1.52	1.51	0.52	6.7
C_6H_{14}	86	18.39	16.64	6.33	73.6
C_7H_{16}	100	5.84	4.54	2.01	20.1
Light Oils	78	43.97	43.86	15.13	194.0
Middle Oils	166	4.10	1.92	1.40	8.5
H_2O	18	0.99	4.30	0.34	19.0
TOTAL		100.00	99.99	34.40	442.3
MWt		77.81			
Total H (excluding H_2O)		12.17		4.19	
Total C		86.84		29.87	

Source: DRI estimates based on information provided by Occidental Oil Shale, Inc.

ammonia remaining in the gas. The cooled MIS gas and the Lurgi gas are then treated for sulfur removal. A removal efficiency down to 30 ppmv H_2S remaining in the treated gases is attainable by the Stretford process. Also, 15% of COS and 70% of CH_3SH are picked up by the Stretford liquor, but they are eventually released in the oxidizer vent gas, which is incinerated in the boilers. Tables 4.2-24 and 4.2-25 present the composition of the MIS and Lurgi retort gases after the Stretford treatment. Separate Stretford absorbers are used for the MIS and Lurgi gases so that the treated gases can be kept separate for appropriate use.

The Stretford precooler condensate is combined with the MIS gas condensate and Lurgi gas liquor and fed to the Phosam-W unit for recovery of ammonia. Due to this, a slight increase in the amount of ammonia is realized in Case Study B. Table 4.2-26 gives the composition of precooler condensate, stripping air, and oxidizer vent gas for the Stretford process.

TABLE 4.2-23. COMPOSITION OF MIS RETORT GAS AFTER STRETFORD PRECOOLER, CASE STUDY B

Component	MWt	Mass %	Mole %	Mass Flow, 10^3 lb/hr	(10^3 SCFM)	Flow, lb-moles/hr
H_2	2	0.62	8.94	55.04	(174.05)	27,519.5
CO	28	1.62	1.66	143.49	(32.41)	5,124.5
CO_2	44	35.94	23.49	3,182.30	(457.42)	72,325.0
N_2	28	56.16	57.68	4,972.36	(1,123.14)	177,584.4
NH_3	17	0.01	0.02	1.20	(0.45)	70.4
H_2S	34	0.19	0.16	17.04	(3.17)	501.3
CH_4	16	0.85	1.53	75.44	(29.82)	4,715.3
C_2H_4	28	0.11	0.11	9.82	(2.22)	350.8
C_2H_6	30	0.25	0.24	22.54	(4.75)	751.3
C_3H_6	42	0.11	0.08	9.82	(1.48)	233.9
C_3H_8	44	0.17	0.11	15.44	(2.22)	350.8
C_4^+	72.35	0.27	0.11	24.32	(2.13)	336.1
COS	60	0.0099	0.0047	0.88	(0.09)	14.6
CS_2	76	0.0025	0.0009	0.22	(0.02)	2.9
CH_3SH	48	0.0032	0.0019	0.28	(0.04)	5.9
H_2O	18	3.66	5.85	324.20	(113.91)	18,011.0
TOTAL		99.98	99.99	8,854.39	(1,947.32)	307,897.7
MWt		28.76				
Total H (excluding H_2O)		1.01		89.41		
Total O (excluding H_2O)		27.07		2,396.63		
Total N		56.17		4,973.35		
Total C		11.90		1,053.92		
Total S		0.19		16.88		
Heating Value, LHV Btu/lb (Btu/SCF)		780 (59)				

Source: DRI estimates based on information from Occidental Oil Shale, Inc. and Tenneco Shale Oil Co., April 1981.

TABLE 4.2-24. COMPOSITION OF MIS RETORT GAS AFTER STRETFORD PROCESS, CASE STUDY B
(Stream 52)

Component	MWt	Mass %	Mole %	Mass Flow, 10^3 lb/hr	(10^3 SCFM)	Flow, lb-moles/hr
H_2	2	0.64	9.09	55.04	(174.05)	27,519.5
CO	28	1.66	1.69	143.49	(32.41)	5,124.5
CO_2	44	34.62	22.46	2,991.36	(429.98)	67,985.5
N_2	28	57.54	58.66	4,972.36	(1,123.14)	177,584.4
NH_3	17	0.01	0.02	1.20	(0.45)	70.4
H_2S	34	0.0036	0.0030	0.31	(0.06)	9.1
CH_4	16	0.87	1.56	75.44	(29.82)	4,715.3
C_2H_4	28	0.11	0.12	9.82	(2.22)	350.8
C_2H_6	30	0.26	0.25	22.54	(4.75)	751.3
C_3H_6	42	0.11	0.08	9.82	(1.48)	233.9
C_3H_8	44	0.18	0.12	15.44	(2.22)	350.8
C_4^+	72.35	0.28	0.11	24.32	(2.13)	336.1
COS	60	0.0086	0.0041	0.74	(0.08)	12.4
CS_2	76	0.0026	0.0010	0.22	(0.02)	2.9
CH_3SH	48	0.0010	0.0006	0.09	(0.01)	1.8
H_2O	18	3.69	5.85	318.78	(112.01)	17,710.1
TOTAL		99.99	100.02	8,640.97	(1,914.83)	302,758.8
MWt		28.54				
Total H		1.02		88.40		
Total O		26.13		2,257.73		
Total N		57.56		4,973.35		
Total C		11.59		1,001.77		
Total S		0.0091		0.78		
Heating Value, LHV Btu/lb (Btu/SCF)			785 (59)			

Source: DRI estimates based on information from Occidental Oil Shale, Inc. and Tenneco Shale Oil Co., April 1981.

TABLE 4.2-25. COMPOSITION OF LURGI RETORT GAS AFTER STRETFORD PROCESS, CASE STUDY B
(Stream 51)

Component	MWt	Mass %	Mole %	Mass Flow, 10^3 lb/hr	Flow, lb-moles/hr
H_2	2	2.46	29.83	3.65	1,826.0
CO	28	3.53	3.06	5.24	187.3
CO_2	44	44.75	24.65	66.40	1,509.1
N_2	28	3.53	3.06	5.24	187.3
NH_3	17	0.03	0.04	0.04	2.2
H_2S	34	0.0021	0.0015	0.0031	0.1
CH_4	16	9.38	14.20	13.91	869.6
C_2H_4	28	6.06	5.24	8.99	321.1
C_2H_6	30	6.22	5.03	9.23	307.7
C_3H_6	42	7.76	4.48	11.52	274.2
C_3H_8	44	4.17	2.29	6.18	140.5
C_4H_8	56	6.82	2.95	10.11	180.6
C_4H_{10}	58	2.09	0.87	3.10	53.5
H_2O	18	3.19	4.30	4.74	263.1
TOTAL		99.99	100.00	148.35	6,122.3
MWt		24.23			
Total H (excluding H_2O)		10.12		15.01	
Total O (excluding H_2O)		34.57		51.29	
Total N		3.55		5.27	
Total C		48.56		72.04	
Total S		0.002		0.003	
Heating Value, LHV Btu/lb (Btu/SCF)			10,070 (643)		

Source: DRI estimates based on information provided by Occidental Oil Shale, Inc.

TABLE 4.2-26. OTHER STREAMS FROM STRETFORD PROCESS, CASE STUDY B
(Streams 50, 53, 54, 55)

Component	Precooler Condensate (Stream 50) lb/hr	Stripping Air (Stream 54) lb/hr	Oxidizer Vent Gas (Stream 53) lb/hr
N_2	--	384,250	384,250
O_2	--	110,450	102,100
CO_2	2,332	--	195,176
NH_3	1,020	--	--
H_2S	10	--	--
COS	--	--	132
CH_3SH	--	--	197
H_2O	165,294	3,000	26,820
TOTAL	168,656	497,700	708,675

Sulfur Recovered (Stream 55) = 16,570 lb/hr (180 MTPSD)

Source: SWEC estimates based on information from Peabody Process Systems, Inc., February 1981.

A recent small MIS retort burn at Tract C-a by Rio Blanco Oil Shale Company encountered variable and much higher levels of sulfur compounds in the retort gas than assumed in this manual (Sklarew, et al., February 1981). Should such changes occur as the retort burns progress at Tract C-b, the performance of the Stretford unit may be adversely affected. A sampling of the data found at Tract C-a is shown in Table 4.2-27.

4.2.6 Flue Gas

In Case Study A, the retort gases are combusted in the steam boilers without any pretreatment (except for the cooling and scrubbing of the gases to remove NH_3). The overhead vapors from the Phosam-W unit (see Table 4.2-36) are also incinerated in the boilers. The flue gas is then desulfurized by lime/limestone scrubbing; the gas composition, before and after FGD, is presented in Table 4.2-28. All sulfur compounds in the fuels are converted to SO_2 during combustion, and an FGD efficiency of 50 ppmv SO_2

TABLE 4.2-27. SELECTED SULFUR SPECIES IN RETORT GAS FROM RIO BLANCO MIS RETORT ZERO BURN

Date	H_2S Concentration (volume %)	Date	COS Concentration (ppmv)
10/12	0.024	--	--
10/13	0.071	--	--
10/16	1.10	--	--
10/17	1.35	--	--
10/20	1.53	10/20	500
11/08	2.87	11/07	470
11/10	3.25	--	--
11/11	3.73	11/11	100
11/12	3.73	--	--
11/13	3.20	11/13	50
11/14	3.00	11/14	50

Source: Sklarew, et al., February 1981.

in the treated flue gas was assumed. The amount of NOx shown is that produced from the fuel-based nitrogen and does not include thermal fixation of the atmospheric nitrogen.

The flue gas composition reported by Cathedral Bluffs is presented in Table 4.2-29 (Occidental Oil Shale, Inc. and Tenneco Shale Oil Co., April 1981). The data in Tables 4.2-28 and 4.2-29 are comparable, except the latter includes the contribution from burning approximately 2,200 BPSD of a Lurgi oil. The amount of SO_2 in the treated gas is based on 95% removal by weight, resulting in lower SO_2 emissions. Also, the NOx quantity includes thermal fixation of the atmospheric nitrogen.

In Case Study B, the retort gases are desulfurized prior to combustion in the steam boilers. The Phosam-W overhead vapors (see Table 4.2-39) and Stretford oxidizer vent gas (see Table 4.2-26) are also added to the Stretford treated retort gases. The resulting flue gas composition is presented in Table 4.2-30. The SO_2 emissions in this case are higher than the FGD case, primarily due to the contribution from the sulfur compounds in the oxidizer vent gas.

TABLE 4.2-28. COMPOSITION OF FLUE GAS FROM THE COMBINED RETORT GASES BEFORE AND AFTER FGD, CASE STUDY A (Streams 67, 79)

Component	MWt	Before FGD (Stream 67)[a] Mass %	Mole %	Mass Flow, 10^3 lb/hr (10^3 SCFM)	After FGD (Stream 79) Mass %	Mole %	Mass Flow, 10^3 lb/hr (10^3 SCFM)
N_2	28	64.44	67.22	11,459.35 (2,588.40)	61.87	62.84	11,459.35 (2,588.40)
CO_2	44	23.48	15.58	4,174.54 (600.05)	22.54	14.57	4,174.54 (600.05)
H_2O	18	8.83	14.32	1,569.31 (551.40)	12.64	19.98	2,341.81 (822.82)
O_2	32	3.04	2.77	540.07 (106.74)	2.92	2.59	540.07 (106.74)
SO_2[b]	64	0.20	0.09	36.03 (3.55)	0.0113	0.0050	2.10 (0.21)
NOx[c]	31.08	0.0148	0.0139	2.63 (0.54)	0.0142	0.0130	2.63 (0.54)
CO	28	0.0040	0.0042	0.71 (0.16)	0.0038	0.0039	0.71 (0.16)
TOTAL		100.01	100.00	17,782.64 (3,850.84)	100.00	100.00	18,521.21 (4,118.92)
MWt		29.21			28.44		
Total O (excluding H_2O)		20.22		3,595.91	19.32		3,579.00
Total N		64.45		11,460.53	61.88		11,460.53
Total C		6.40		1,138.82	6.15		1,138.82
Total S		0.10		17.96	0.0057		1.05

[a] Phosam-W overhead vapors for this case study are included in the fuel to the boilers.

[b] SO_2 control assumed to be 50 ppmv in the flue gas.

[c] NOx assumed to be 90% NO and 10% NO_2 by weight. Also, particulate matter estimated at 151 lb/hr, total hydrocarbons at 23 lb/hr. NOx based on fuel nitrogen only.

Source: DRI estimates.

TABLE 4.2-29. REPORTED COMPOSITION OF FLUE GAS, CASE STUDY A
(Streams 67, 79)

Component	MWt	Boiler Flue Gas (Stream 67)		FGD Stack Gas (Stream 79)	
		lb-moles/hr	10^3 lb/hr	lb-moles/hr	10^3 lb/hr
N_2	28	407,707.7	11,415.82	407,707.7	11,415.82
CO_2	44	98,446.6	4,331.65	98,446.6	4,331.65
H_2O	18	89,247.7	1,606.46	138,078.9	2,485.42
O_2	32	11,550.2	369.61	11,550.2	369.61
SO_2	64	535.4	34.27	26.8	1.72
NOx	31.08	--	--	222.8	6.92
TOTAL		607,487.6	17,757.81	656,033.0	18,611.14

Source: Occidental Oil Shale, Inc. and Tenneco Shale Oil Co., April 1981.

TABLE 4.2-30. COMPOSITION OF FLUE GAS FROM THE COMBINED STRETFORD TREATED RETORT GASES, CASE STUDY B
(Stream 68)

Component	MWt	Mass %	Mole %	Mass Flow,[a] 10^3 lb/hr	(10^3 SCFM)
N_2	28	65.00	68.18	11,330.08	(2,559.19)
CO_2	44	23.95	15.99	4,174.70	(600.02)
H_2O	18	7.98	13.03	1,391.82	(489.04)
O_2	32	3.04	2.79	529.29	(104.61)
SO_2	64	0.0164	0.0075	2.86	(0.28)
NOx[b]	31.08	0.0101	0.0095	1.76	(0.35)
CO	28	0.0045	0.0047	0.78	(0.18)
TOTAL		100.00	100.01	17,431.29	(3,753.67)
MWt		29.37			
Total O (excluding H_2O)		20.47		3,568.07	
Total N		65.00		11,330.87	
Total C		6.53		1,138.89	
Total S		0.0082		1.43	

[a] Phosam-W overhead vapors and Stretford oxidizer vent gas for this case study are included in the fuel to the boilers.

[b] NOx assumed to be 90% NO, 10% NO_2 by weight. Also, particulate matter estimated at 149 lb/hr, total hydrocarbon at 22 lb/hr.

Source: DRI estimates.

The flue gas resulting from burning the organic residue on the Lurgi processed shale is presented in Table 4.2-31. The composition has been estimated from the material and elemental balances, and it does not completely agree with the values reported by Cathedral Bluffs (Occidental Oil Shale, Inc. and Tenneco Shale Oil Co., April 1981). The reported values for the flue gas are presented in Table 4.2-32.

4.2.7 Process Wastewaters

Because of the temperature profile of the MIS retort gas during a burn, different amounts of moisture are contained in the retort gas at different times; therefore, the quantity of gas condensate, which may be obtained by

TABLE 4.2-31. COMPOSITION OF FLUE GAS FROM LURGI LIFT PIPES*
(Stream 15)

Component	MWt	Mass %	Mole %	Flow 10^3 lb/hr	Flow 10^3 SCFM	Flow lb-moles/hr
N_2	28	55.14	52.83	1,913.82	432.30	68,350.7
O_2	32	4.45	3.73	154.54	30.54	4,829.4
CO_2	44	19.01	11.59	659.79	94.84	14,995.2
H_2O	18	21.32	31.77	740.00	260.02	41,111.1
SO_2	64	0.0032	0.0013	0.11	0.01	1.8
CO	28	0.0712	0.0682	2.47	0.56	88.3
NOx	31.08	0.0078	0.0067	0.27	0.05	8.8
TOTAL		100.00	100.00	3,471.00	818.32	129,385.3

* The flue gas composition is calculated from the materials balance. SO_2, NOx, and CO are assumed to be 20, 100, and 1,000 ppmv (dry basis) in the flue gas. Also, the particulate matter is estimated to be 284 lb/hr.

Source: DRI estimates based on materials and elemental balances.

TABLE 4.2-32. REPORTED COMPOSITION OF LURGI FLUE GAS
(Stream 15)

Component*	MWt	Mass %	Mole %	Flow 10^3 lb/hr	Flow 10^3 SCFM	Flow lb-moles/hr
N_2	28	59.80	59.00	1,856.04	419.24	66,287.0
O_2	32	3.28	2.83	101.72	20.10	3,178.6
CO_2	44	20.34	12.77	631.31	90.75	14,348.0
H_2O	18	16.50	25.32	512.08	179.93	28,449.0
SO_2	64	0.0035	0.0015	0.11	0.01	1.7
CO	28	0.0757	0.0747	2.35	0.53	83.9
NOx	31.08	0.0084	0.0075	0.26	0.05	8.4
TOTAL		100.01	100.00	3,103.87	710.61	112,356.6

* Particulate matter is reported at 0.06 grains/SCF, or 365 lb/hr.

Source: Occidental Oil Shale, Inc. and Tenneco Shale Oil Co., April 1981.

cooling the gas, also varies with time. In the beginning of a burn, a majority of each retort column is still at ambient temperature. The saturation volume of the water vapor in the retort gas at that time is low and much of the injected steam condenses in the retort to form the retort water. Very little water can be condensed out of the retort gas and very little gas condensate may be obtained. With the progression of the burn, the retort gas exit temperature increases and more moisture is carried in the retort gas; therefore, more gas condensate is obtained upon cooling the gas and the retort water quantity decreases proportionately. In any event, the sum of retort water and gas condensate quantities should not vary significantly. The text and tables presented in the following discussion refer to the retort at operating temperature; that is, a maximum quantity of gas condensate is obtained, but no retort water is formed.

MIS Gas Condensate--

Table 4.2-33 gives the estimated composition of MIS gas condensate obtained by modeling the absorber/cooler. Experimental values obtained for gas condensate from Room 6 are also presented for comparison. Since the values for dissolved organic materials and total dissolved solids could not be estimated by modeling, Room 6 data on these components have been used.

Lurgi Gas Liquor--

Table 4.2-34 presents the composition of the gas liquor obtained from the Lurgi process. The quantity of ammonium sulfite is that resulting from absorption of SO_2 in the gas liquor. The miscellaneous hydrocarbons are composed of phenols plus fatty acids (Rio Blanco Oil Shale Co., February 1981).

Treated Gas Condensates--

As stated previously, the gas condensates contain a significant portion of the ammonia originally present in the retort gases. This ammonia is recovered in an anhydrous state as a by-product. The treatment technology selected for this purpose is the Phosam-W process. For both case studies, the gas condensate from the MIS process, gas liquor from the Lurgi process, and overhead vapors from the retort water steam stripper are combined as feed to the Phosam-W ammonia recovery unit. In addition, in Case Study B, the precooler condensate from the Stretford unit is added to the feed. Overhead vapors from the Phosam-W unit are sent to the steam boilers where they are burned along with the fuel gas.

In both cases, the NH_3 level is reduced to 0.05 mole % in the treated water. A constant amount of the treated water is recycled to the absorber/cooler to scrub out NH_3 from the entering gas. A portion of the net treated water (after meeting the recycle needs) is sent to the Lurgi waste heat boilers and the balance is sent to the kettle evaporators; both of these units produce a low-quality steam to be used in the MIS retorts. The kettle evaporators also receive the stripped retort water and blowdown from the Lurgi waste heat boilers. The concentrated waters from the kettle evaporators are used for Lurgi processed shale moisturizing. Tables 4.2-35 to

TABLE 4.2-33. COMPOSITION OF MIS GAS CONDENSATE
(Stream 48)

Component	Value, mg/l		Mass Flow, 10^3 lb/hr (gpm)
	Room 6 Burn[a]	Estimation[b]	
CO_2	14,400	17,200	33.00
NH_3	9,600	13,900	26.65
H_2S	--	125	0.24
H_2O	remainder	remainder	1,857.98 (3,716)
Hardness (as $CaCO_3$)	<2	N.D.	--
Alkalinity (as $CaCO_3$)	24,000	N.D.	--
DOC	800	N.D.	1.53
COD	2,300-3,000	N.D.	--
BOD_5	600[c]	N.D.	--
TDS	270	N.D.	0.52

[a] Analyses performed by WPA on gas condensate from Room 6 burn at Logan Wash.

[b] Obtained by computer simulation of absorber/cooler on the MIS retort gas. N.D. = Not determined.

[c] Gas condensate appears to contain bio-refractory material; therefore, BOD is below actual organic carbon. 90% of the organic matter is volatile at 100°C.

Source: WPA estimates.

TABLE 4.2-34. COMPOSITION OF LURGI GAS LIQUOR
(Stream 29)

Component	Mass %	Mass Flow, lb/hr (gpm)
NH_3	1.16	1,944
$(NH_4)_2SO_3$	0.26	442
CO_2	1.51	2,516
Miscellaneous Organics	0.16	261
H_2O	96.91	162,000 (324)
TOTAL	100.00	167,163 (324)

Source: DRI estimates based on information from Rio Blanco Oil Shale Co., February 1981.

4.2-37 and 4.2-38 to 4.2-40 contain the Phosam-W feed compositions, material balance around the Phosam-W unit, and material balance around the Lurgi waste heat boilers for Case Studies A and B, respectively.

Retort Water--

As stated earlier, retort water is obtained for the MIS process until the retort gas is hot enough to contain all the water in vapor form. The retort water from Room 6 was analyzed periodically during that burn (Loucks, November 1979). The average composition for the month of November 1978, when the retort was judged to operate under optimum conditions, is given in Tables 4.2-41 and 4.2-42. The TDS value of 8,400 ppm from Table 4.2-41 is used for the retort water. TOC has been analyzed to be 3,400 ppm in the Room 6 retort water (Hicks and Liang, January 1981); therefore, that value, instead of the average value of 2,690 ppm for the month of November 1978, is assumed. The organic matter is assumed to be 75% dissolved organic carbon by weight and, based on the treatability studies, 20% of the organic matter is assumed to be steam strippable. Finally, ammonia is assumed to be 1,300 ppm of the water. (Table 4.2-41 indicates an average of 1,700 ppm was found.)

The retort water, as mentioned previously, is used in the kettle evaporators to produce low-quality steam for the MIS retorts. It is necessary to remove a majority of the dissolved gases and volatile organics before this use. The retort water is steam stripped to remove the volatile matter. The overhead vapors are sent to the Phosam-W unit for recovery of ammonia, while

TABLE 4.2-35. COMPOSITION OF TOTAL FEED TO PHOSAM-W AMMONIA RECOVERY PROCESS, CASE STUDY A
(Streams 29, 43, 48, 64)

Component	Lurgi Gas Liquor (Stream 29)		MIS Gas Condensate (Stream 48)		Retort Water Stripper Overhead (Stream 43)		Stripped Water Recycle to Absorber/Cooler (Stream 64)		Total Feed to Phosam-W Unit	
	Mass %	lb/hr (gpm)	Mass %	lb/hr (gpm)	Mass %	lb/hr (10^3 SCFM)	Mass %	lb/hr (gpm)	Mass %	lb/hr (gpm)
CO_2	1.51	2,516	1.72	33,000	2.82	2,748 (0.40)	--	--	1.11	38,264
NH_3	1.16	1,944	1.39	26,650	0.77	750 (0.28)	0.05	589	0.87	29,933
H_2S	--	--	0.013	240	0.06	60 (0.01)	--	--	0.009	300
TDS	--	--	0.027	520	--	--	0.025	314	0.024	834
Miscellaneous Organics	0.16	261	0.08	1,534	0.57	554 (0.06)	0.018	157	0.07	2,506
$(NH_4)_2SO_3$	0.26	442	--	--	--	--	0.022	271	0.021	713
H_2O	96.91	162,000 (324)	96.77	1,857,978 (3,716)	95.79	93,493 (32.85)	99.89	1,248,686 (2,494)	97.89	3,362,157 (6,721)
TOTAL	100.00	167,163	100.00	1,919,922	100.01	97,605 (33.60)	100.00	1,250,017	99.99	3,434,707

Source: WPA estimates.

TABLE 4.2-36. MATERIAL BALANCE AROUND PHOSAM-W AMMONIA RECOVERY PROCESS, CASE STUDY A
(Streams 61, 62, 63, 64, 65)

Component	Total Feed Before Treatment		After Treatment					
			Recycle to Absorber/Cooler (Stream 64)		Feed to Lurgi Waste Heat Boiler (Stream 63)	Net Water to Kettle Evaporators (Stream 65)	Phosam-W Overhead Vapors (Stream 61)	Ammonia Product (Stream 62)
	Mass %	lb/hr (gpm)	Mass %	lb/hr (gpm)	lb/hr (gpm)	lb/hr (gpm)	lb/hr (10^3 SCFM)	lb/hr (TPSD)
CO_2	1.11	38,264	--	--	--	--	38,264 (5.50)	--
NH_3	0.87	29,933	0.05	589	146	830	714 (0.27)	27,654 (332)
H_2S	0.009	300	--	--	--	--	300 (0.01)	--
TDS	0.024	834	0.02	314	78	442	--	--
Miscellaneous Organics	0.07	2,506	0.02	157	39	222	2,088 (0.15)	--
$(NH_4)_2SO_3$	0.021	713	0.02	271	67	375	--	--
H_2O	97.89	3,362,157 (6,721)	99.89	1,248,686 (2,494)	310,000 (620)	1,758,471 (3,517)	45,000 (15.81)	--
TOTAL	99.99	3,434,707	100.00	1,250,017	310,330	1,760,340	86,366 (21.79)	27,654

Source: WPA estimates.

TABLE 4.2-37. MATERIAL BALANCE AROUND LURGI WASTE HEAT RECOVERY BOILER, CASE STUDY A
(Streams 19, 20, 63)

Component	Stripped Water Feed From Phosam-W (Stream 63)			Steam Formed to MIS Retorts (Stream 19)			Concentrate to Kettle Evaporators (Stream 20)		
	Mass %	lb/hr	(gpm)	Mass %	lb/hr	(10^3 SCFM)	Mass %	lb/hr	(gpm)
NH_3	0.047	146		0.06	146	(0.05)	--	--	
TDS	0.028	78		--	--		0.11	78	
Miscellaneous Organics	0.02	39		--	--		0.07	39	
$(NH_4)_2SO_3$	0.02	67		--	--		0.10	67	
H_2O	99.88	310,000	(620)	99.96	240,000	(84.33)	99.72	70,000	(140)
TOTAL	100.00	310,330		100.00	240,146	(84.38)	100.00	70,184	

Source: WPA estimates based on information from Occidental Oil Shale, Inc. and Tenneco Shale Oil Co., April 1981.

TABLE 4.2-38. COMPOSITION OF TOTAL FEED TO PHOSAM-W AMMONIA RECOVERY PROCESS, CASE STUDY B
(Streams 29, 43, 48, 50, 64)

Component	Lurgi Gas Liquor (Stream 29)		MIS Gas Condensate (Stream 48)		Stretford Precooler Condensate (Stream 50)		Retort Water Stripper Overhead (Stream 43)		Stripped Water Recycle to Absorber/Cooler (Stream 64)		Total Feed to Phosam-W Unit	
	Mass %	lb/hr (gpm)	Mass %	lb/hr (gpm)	Mass %	lb/hr (gpm)	Mass %	lb/hr (10^3 SCFM)	Mass %	lb/hr (gpm)	Mass %	lb/hr (gpm)
CO_2	1.51	2,516	1.72	33,000	1.37	2,332	2.82	2,748 (0.40)	--	--	1.13	40,596
NH_3	1.16	1,944	1.39	26,650	0.60	1,020	0.77	750 (0.28)	0.05	589	0.86	30,953
H_2S	--	--	0.013	240	0.006	10	0.06	60 (0.01)	--	--	0.009	310
TDS	--	--	0.027	520	--	--	--	--	0.024	302	0.023	822
Miscellaneous Organics	0.16	261	0.08	1,534	--	--	0.57	554 (0.06)	0.025	145	0.07	2,494
$(NH_4)_2SO_3$	0.26	442	--	--	--	--	--	--	0.021	257	0.019	699
H_2O	96.91	162,000 (324)	96.77	1,857,978 (3,716)	98.02	166,294 (331)	95.79	93,493 (32.85)	99.88	1,246,770 (2,494)	97.89	3,525,535 (7,052)
TOTAL	100.00	167,163	100.00	1,919,922	99.99	168,656	100.01	97,605 (33.60)	99.99	1,248,063	100.00	3,601,409

Source: WPA estimates.

TABLE 4.2-39. MATERIAL BALANCE AROUND PHOSAM-W AMMONIA RECOVERY PROCESS, CASE STUDY B
(Streams 61, 62, 63, 64, 66)

Component	Total Feed Before Treatment		After Treatment: Recycle to Absorber/Cooler (Stream 64)		After Treatment: Feed to Lurgi Waste Heat Boiler (Stream 63)	After Treatment: Net Water to Kettle Evaporators (Stream 66)	After Treatment: Phosam-W Overhead Vapors (Stream 61)	After Treatment: Ammonia Product (Stream 62)
	Mass %	lb/hr (gpm)	Mass %	lb/hr (gpm)	lb/hr (gpm)	lb/hr (gpm)	lb/hr (10^3 SCFM)	lb/hr (TPSD)
CO_2	1.13	40,596	--	--	--	--	40,596 (5.82)	--
NH_3	0.86	30,953	0.05	589	146	880	699 (0.26)	28,639 (344)
H_2S	0.009	310	--	--	--	--	310 (0.06)	--
TDS	0.023	822	0.024	302	75	445	--	--
Miscellaneous Organics	0.07	2,494	0.025	145	36	225	2,088 (0.14)	--
$(NH_4)_2SO_3$	0.019	699	0.021	257	64	378	--	--
H_2O	97.89	3,525,535 (7,052)	99.88	1,246,770 (2,494)	310,000 (620)	1,927,919 (3,856)	40,846 (14.35)	--
TOTAL	100.00	3,601,409	99.99	1,248,063	310,321	1,929,847	84,539 (20.63)	28,639

Source: WPA estimates.

TABLE 4.2-40. MATERIAL BALANCE AROUND LURGI WASTE HEAT RECOVERY BOILER, CASE STUDY B
(Streams 19, 20, 63)

Component	Stripped Water Feed From Phosam-W (Stream 63)		Steam Formed to MIS Retorts (Stream 19)		Concentrate to Kettle Evaporators (Stream 20)	
	Mass %	lb/hr (gpm)	Mass %	lb/hr (10^3 SCFM)	Mass %	lb/hr (gpm)
NH_3	0.047	146	0.06	146 (0.05)	--	--
TDS	0.028	75	--	--	0.11	75
Miscellaneous Organics	0.02	36	--	--	0.11	36
$(NH_4)_2SO_3$	0.02	64	--	--	0.09	64
H_2O	99.93	310,000 (620)	99.94	240,000 (84.33)	99.69	70,000 (140)
TOTAL	100.00	310,321	100.00	240,146 (84.38)	100.00	70,175

Source: WPA estimates based on information from Occidental Oil Shale, Inc. and Tenneco Shale Oil Co., April 1981.

TABLE 4.2-41. COMPOSITION OF RETORT WATER FROM MIS PROCESS[a]
(Stream 41)

Component	Range, mg/l	Average, mg/l
Total Alkalinity (as $CaCO_3$)	10,200 - 12,600	11,420
Bicarbonate (as $CaCO_3$)	9,200 - 9,900	9,620
Carbonate (as $CaCO_3$)	1,000 - 2,800	1,800
Total Suspended Solids[b]	100 - 9,900	410
Total Dissolved Solids	2,500 - 13,000	8,400
Sulfate	1,200 - 2,500	1,800
Chloride	58 - 180	97
Fluoride	27 - 34	31
Phenol	20 - 44	27
Nitrate	330 - 640	460
Oil and Grease	200 - 300	250
Silica	26 - 28	27
Sodium	4,000 - 4,400	4,300
Potassium	81 - 97	89
Arsenic	0.23 - 0.38	0.26
Iron	<0.5 - 2	0.8
Magnesium	6 - 29	15.5
Manganese	<0.02 - 0.02	<0.02
Boron	3.7 - 15	10
Calcium[c]	2.7 - 70	3.4
Vanadium	<0.1 - 0.1	<0.1
Copper	<0.02 - 0.04	<0.02
Molybdenum	0.07 - 0.4	0.2
Lithium	2	2
Zinc	<0.02 - 0.03	<0.02
Aluminum	<0.02 - 0.2	<0.07
Barium	2 - 3.3	2.3
Strontium	2 - 4	3
Lead	<0.02	<0.02
Sulfite[d]	0 - 90	90
Nickel	<0.02 - 0.04	<0.02
Cadmium	<0.02	<0.02
Ammonia (as N)	1,300 - 2,000	1,700
Selenium	<0.02	<0.02
Mercury	<0.02	<0.02

[a] Average for the month of November 1978 for Room 6 burn at Logan Wash.

[b] One sample analyzed was unusually high in total suspended solids content.

[c] A drastic reduction in the calcium concentration was noticed from November 1978.

[d] Sulfite levels were almost zero prior to November 1978.

Source: Loucks, November 1979.

TABLE 4.2-42. OTHER PROPERTIES OF RETORT WATER FROM MIS PROCESS*
(Stream 41)

Parameter	Value	
	Range	Average
TOC, mg/l	940 - 7,685	2,690
DOC, mg/l	838 - 2,561	1,660
$S_2O_3^=$, mg/l	56 - 214	138
Nitrogen (Kjeldahl), mg/l	8 - 1,340	420
Fecal Coliforms, Colonies/100 ml	<1	<1
Total Alpha, pCi/l	11 - 29	17
Total Beta, pCi/l	0 - 65	31
Radium 226 pCi/l	0.2 - 1.5	0.8

* Averages for November 1978 for Room 6 burn at Logan Wash.

Source: Loucks, November 1979.

the stripped retort water is sent to the kettle evaporators for producing the low-quality steam. Nonrecoverable compounds from the Phosam-W unit are removed in the Phosam-W overhead vapors and sent for subsequent combustion in the steam boilers. Table 4.2-43 contains the balance around the retort water stripper. Both maximum and average flows and compositions for the retort water are given.

4.2.8 Steam Generation

Two types of steam are produced for the process needs. High-quality steam is produced in steam boilers using treated mine water. This steam is used for driving the process turbines, for generating electricity, and as a heat source for the kettle evaporators. Low-quality steam is produced in the kettle evaporators using process wastewaters as the feed. This steam is entirely consumed in the MIS retorts. The feedwater to the kettle evaporators is composed of the stripped Phosam-W condensate, stripped retort water, and Lurgi waste heat boiler blowdown. After producing the necessary amount of steam, the concentrated water is used for Lurgi processed shale moisturizing. Tables 4.2-44 and 4.2-45 present the material balances around the kettle evaporators for the two case studies.

TABLE 4.2-43. MATERIAL BALANCE FOR THE RETORT WATER AROUND STEAM STRIPPER
(Streams 41, 42, 43)

Component	Retort Water (Stream 41)			Stripped Water (Stream 42)			Stripper Overhead (Stream 43)		
	Mass %	Maximum lb/hr (gpm)	Average lb/hr (gpm)	Mass %	Maximum lb/hr (gpm)	Average lb/hr (gpm)	Mass %	Maximum lb/hr (10^3 SCFM)	Average lb/hr (10^3 SCFM)
CO_2	0.45	10,350	2,748	--	--	--	2.81	10,350 (1.49)	2,748 (0.40)
NH_3	0.13	2,938	780	0.006	114	30	0.77	2,824 (1.05)	750 (0.28)
H_2S	0.010	226	60	--	--	--	0.06	226 (0.04)	60 (0.01)
Organic Matter*	0.45	10,442	2,772	0.43	8,354	2,218	0.57	2,088 (0.23)	554 (0.06)
TDS	0.84	19,320	5,130	1.00	19,320	5,130	--	--	--
H_2O	98.12	2,260,000 (4,520)	600,000 (1,200)	98.56	1,907,843 (3,816)	506,507 (1,013)	95.79	352,157 (123.74)	93,493 (32.85)
TOTAL	100.00	2,303,276	611,490	100.00	1,935,631	513,885	100.00	367,645 (126.55)	97,605 (33.60)

* Based on treatability studies by WPA (Hicks and Liang, January 1981), twenty percent of the organic matter is assumed removed by steam stripping.

Source: WPA estimates based on information from Loucks, November 1979.

TABLE 4.2-44. MATERIAL BALANCE FOR KETTLE EVAPORATORS, CASE STUDY A
(Streams 20, 42, 65, 70, 76)

	Before Treatment						After Treatment	
	Treated Gas Condensate from Phosam-W (Stream 65)		Concentrate from Lurgi Waste Heat Boiler (Stream 20)	Stripped MIS Retort Water (Stream 42)		Total Feed to Kettle Evaporators	Steam Formed to MIS Retorts (Stream 70)	Concentrate to Processed Shale Disposal (Stream 76)
Component	Maximum lb/hr (gpm)	Average lb/hr (gpm)	lb/hr (gpm)	Maximum lb/hr (gpm)	Average lb/hr (gpm)	Average lb/hr (gpm)	lb/hr (10^3 SCFM)	lb/hr (gpm)
NH_3	830	524	--	114	30	554	554 (0.21)	--
TDS	442	279	78	19,320	5,130	5,487	--	5,487
Organics	222	140	39	8,354	2,218	2,397	719 (0.12)	1,678
$(NH_4)_2SO_3$	375	237	67	--	--	304	--	304
H_2O	1,758,471 (3,517)	1,110,000 (2,220)	70,000 (140)	1,907,843 (3,816)	506,507 (1,013)	1,686,507 (3,373)	1,510,000 (530.57)	176,507 (353)
TOTAL	1,760,340	1,111,180	70,184	1,935,631	513,885	1,695,249	1,511,273 (530.90)	183,976

Source: WPA estimates.

TABLE 4.2-45. MATERIAL BALANCE FOR KETTLE EVAPORATORS, CASE STUDY B
(Streams 20, 42, 66, 70, 77)

	Before Treatment						After Treatment	
	Treated Gas Condensate from Phosam-W (Stream 66)		Concentrate from Lurgi Waste Heat Boiler (Stream 20)	Stripped MIS Retort Water (Stream 42)		Total Feed to Kettle Evaporators	Steam Formed to MIS Retorts (Stream 70)	Concentrate to Processed Shale Disposal (Stream 77)
Component	Maximum lb/hr (gpm)	Average lb/hr (gpm)	lb/hr (gpm)	Maximum lb/hr (gpm)	Average lb/hr (gpm)	Average lb/hr (gpm)	lb/hr (10^3 SCFM)	lb/hr (gpm)
NH_3	880	584	--	114	30	614	614 (0.23)	--
TDS	445	295	75	19,320	5,130	5,500	--	5,500
Organics	225	150	36	8,354	2,218	2,404	721 (0.12)	1,683
$(NH_4)_2SO_3$	378	251	64	--	--	315	--	315
H_2O	1,927,919 (3,856)	1,279,500 (2,559)	70,000 (140)	1,907,843 (3,816)	506,507 (1,013)	1,856,007 (3,712)	1,510,000 (530.57)	346,007 (692)
TOTAL	1,929,847	1,280,780	70,175	1,935,631	513,885	1,864,840	1,511,335 (530.92)	353,505

Source: WPA estimates.

4.3 POLLUTANT CROSS-REFERENCE TABLES

Tables 4.3-1 through 4.3-3 list some pollutants of concern, by medium, and provide a cross-reference to the numbered streams in this manual. Many of these pollutants are trace constituents, and measurements to identify or quantify them in oil shale processing related streams have never been made. Those pollutants which have been identified in the plant streams are cross-referenced to the detailed composition tables. Engineering judgment was used in identifying other probable pollutants. The entry for "unknown" (U) indicates that no testing has been done and the presence of the pollutant is unlikely. Judgment was also used in specifying the pollutants which definitely should not be present.

TABLE 4.3-1. POLLUTANT CROSS-REFERENCE FOR GASEOUS STREAMS

		Pollutants															
Stream No.	Table No.	CO	NO_x	SO_x	TPM	O_3	As	Be	Hg	Fluorides	H_2SO_4 Mist	H_2S	Pb	Total Reduced Sulfur	Vinyl Chloride	Polynuclear Organic Matter	Asbestos
3*		N	N	N	N	N	N	N	N	N	N	N	N	N	N	N	N
4*		U	U	U	Y	U	U	U	U	U	N	P	U	P	N	P	N
5*		Y	Y	Y	Y	U	N	N	N	N	U	U	N	U	N	P	N
6*		U	U	U	Y	U	U	U	U	U	N	P	U	P	N	P	N
7*		U	U	U	Y	U	U	U	U	U	N	P	U	P	N	P	N
8*		U	U	U	Y	U	U	U	U	U	N	P	U	P	N	P	N
9*		U	U	U	Y	U	U	U	U	U	N	P	U	P	N	P	N
10*		U	U	U	Y	U	U	U	U	U	N	P	U	P	N	P	N
11*		U	U	U	Y	U	U	U	U	U	N	P	U	P	N	P	N
14*		U	U	U	Y	U	U	U	U	U	N	P	U	P	N	P	N
15*	4.2-31, 4.2-32	Y	Y	Y	Y	U	U	N	U	U	U	P	U	P	N	P	N
16	4.2-17	Y	Y	Y	P	N	P	N	U	U	N	Y	U	Y	N	N	N
18*		U	U	U	Y	U	U	U	U	U	N	N	U	N	N	N	N
19*	4.2-37, 4.2-40	N	N	N	N	N	N	N	N	N	U	P	N	P	N	N	N
21		N	N	N	N	N	N	N	N	N	N	N	N	N	N	N	N
22	4.2-18	Y	N	Y	P	N	P	N	U	U	N	Y	U	Y	N	N	N
23	4.2-19	Y	N	Y	P	N	P	N	U	U	N	Y	U	Y	N	N	N
28*		N	N	N	N	N	N	N	N	N	N	N	N	N	N	N	N
31	4.2-20, 4.2-21	Y	N	Y	N	N	N	N	N	N	N	Y	N	Y	N	N	N
32		Y	N	Y	N	N	N	N	N	N	N	Y	N	Y	N	N	N
34*		N	N	N	N	N	N	N	N	N	N	N	N	N	N	N	N
37*		N	N	N	N	N	N	N	N	N	N	N	N	N	N	N	N
38*	4.2-15	Y	N	P	P	N	U	N	U	U	U	Y	U	Y	N	P	N
40*		N	N	N	N	N	N	N	N	N	N	N	N	N	N	N	N
43	4.2-35, 4.2-38, 4.2-43	N	N	P	N	N	N	N	N	N	N	Y	N	Y	N	N	N
45	4.2-16	Y	N	P	N	N	N	N	N	N	N	Y	N	Y	N	N	N
47*		N	N	N	N	N	N	N	N	N	N	N	N	N	N	N	N
49*		N	N	N	N	N	N	N	N	N	N	N	N	N	N	N	N
51	4.2-25	Y	N	N	N	N	N	N	N	N	N	P	N	P	N	N	N
52	4.2-24	Y	N	N	N	N	N	N	N	N	N	P	N	P	N	N	N
53	4.2-26	P	N	P	N	N	N	N	N	N	P	P	N	Y	N	N	N
54	4.2-26	N	N	N	N	N	N	N	N	N	N	N	N	N	N	N	N

(Continued)

TABLE 4.3-1 (cont.)

Stream No.	Table No.	Pollutants															
		CO	NO_x	SO_x	TPM	O_3	As	Be	Hg	Fluorides	H_2SO_4 Mist	H_2S	Pb	Total Reduced Sulfur	Vinyl Chloride	Polynuclear Organic Matter	Asbestos
58*		N	N	N	N	N	N	N	N	N	N	N	N	N	N	N	N
61*	4.2-36, 4.2-39	N	N	N	N	N	N	N	N	N	N	Y	N	Y	N	N	N
67	4.2-28, 4.2-29	Y	Y	Y	Y	N	N	N	N	N	P	N	N	N	N	P	N
68*	4.2-30	Y	Y	Y	Y	N	N	N	N	N	P	N	N	N	N	P	N
69		N	N	N	N	N	N	N	N	N	N	P	N	P	N	N	N
70*	4.2-44, 4.2-45	N	N	N	N	N	N	N	N	N	N	P	N	P	N	N	N
71		N	N	N	N	N	N	N	N	N	N	U	N	U	N	N	N
72		N	N	N	N	N	N	N	N	N	N	U	N	U	N	N	N
73		N	N	N	N	N	N	N	N	N	N	U	N	U	N	N	N
74		N	N	N	N	N	N	N	N	N	N	U	N	U	N	N	N
75		N	N	N	N	N	N	N	N	N	N	U	N	U	N	N	N
79*	4.2-28, 4.2-29	Y	Y	Y	Y	N	N	N	N	N	U	N	N	N	N	N	N
87*		N	N	N	N	N	N	N	N	N	N	N	N	N	N	N	N
96*		N	N	N	N	N	N	N	N	N	N	N	N	N	N	N	N
112*		N	N	N	N	N	N	N	N	N	N	N	N	N	N	N	N
113*		N	N	N	N	N	N	N	N	N	N	N	N	N	N	N	N
117*		N	N	N	N	N	N	N	N	N	N	N	N	N	N	N	N
119*		Y	Y	Y	Y	U	N	N	N	N	U	U	N	U	N	P	N
120*		U	U	U	Y	U	U	U	U	U	N	U	U	P	N	P	N
121*		U	U	U	Y	U	U	U	U	U	N	U	U	P	N	P	N

* Indicates streams that come into contact with the environment.

Key: Y = Present
N = Not Present
P = Probably Present
U = Presence Unknown

Source: DRI estimates.

TABLE 4.3-2. POLLUTANT CROSS-REFERENCE FOR LIQUID STREAMS

Stream No.	Table No.	Pollutants																		
		Al	As	B	Cd	Cr	Co	F	Hg	Ni	Pb	Ra	V	Zn	NH_3	COD	TOC	Phenols	TDS	TSS
12*		P	P	P	P	P	P	P	P	P	P	P	P	P	Y	Y	Y	Y	Y	Y
13*	4.2-5	P	P	P	P	P	P	P	P	P	P	P	P	P	P	Y	Y	P	Y	Y
20*	4.2-37, 4.2-40, 4.2-44, 4.2-45	N	P	N	N	N	N	N	N	N	N	N	N	N	P	Y	Y	Y	Y	Y
24	4.2-14	N	P	N	N	N	N	P	P	N	N	N	N	N	N	Y	Y	Y	N	N
25		N	P	N	N	N	N	P	P	N	N	N	N	N	N	Y	Y	Y	N	N
26	4.2-14	N	P	N	N	N	N	P	P	N	N	N	N	N	N	Y	Y	Y	N	N
27	4.2-14	N	P	N	N	N	N	P	P	N	N	N	N	N	N	Y	Y	Y	N	N
29	4.2-34, 4.2-35, 4.2-38	N	P	N	N	N	N	U	U	N	N	N	N	N	Y	Y	Y	Y	N	N
33	4.2-22	N	U	N	N	N	N	N	U	N	N	N	N	N	N	Y	Y	N	N	N
39*	4.2-13	N	P	N	N	N	N	P	P	N	N	N	N	N	Y	Y	Y	Y	P	N
41*	4.2-10, 4.2-11, 4.2-41, 4.2-42, 4.2-43	Y	Y	Y	P	P	P	Y	P	P	P	P	P	P	Y	Y	Y	Y	Y	Y
42	4.2-43, 4.2-44, 4.2-45	Y	Y	Y	P	P	P	Y	P	P	P	P	P	P	Y	Y	Y	P	Y	N
44		N	P	N	N	N	N	U	U	N	N	N	N	N	N	Y	Y	Y	N	N
46		N	P	N	N	N	N	U	U	N	N	N	N	N	P	Y	Y	Y	N	N
48	4.2-33, 4.2-35, 4.2-38	N	P	N	N	N	N	N	N	N	N	N	N	N	Y	Y	Y	Y	Y	P
50	4.2-26, 4.2-38	N	P	N	N	N	N	N	N	N	N	N	N	N	Y	Y	Y	Y	Y	P
55	4.2-26	N	U	N	N	N	N	N	N	N	N	P	N	N	N	N	N	N	N	N
56		N	N	N	N	N	N	N	N	N	N	N	Y	N	N	N	N	N	Y	N
57*		N	N	N	N	N	N	N	N	N	N	N	N	N	P	P	P	P	Y	P
59		N	N	N	N	N	N	N	N	N	N	N	N	N	N	N	N	N	N	N
62	4.2-36, 4.2-39	N	N	N	N	N	N	N	N	N	N	N	N	N	N	N	N	N	N	N
63	4.2-36, 4.2-37, 4.2-39, 4.2-40	N	P	N	N	N	N	N	N	N	N	N	N	N	Y	Y	Y	Y	Y	P
64	4.2-35, 4.2-36, 4.2-38, 4.2-39	N	P	N	N	N	N	N	N	N	N	N	N	N	Y	Y	Y	Y	Y	P
65	4.2-36, 4.2-44	N	P	N	N	N	N	N	N	N	N	N	N	N	Y	Y	Y	Y	Y	P
66	4.2-39, 4.2-45	N	P	N	N	N	N	N	N	N	N	N	N	N	Y	Y	Y	Y	Y	P
76*	4.2-44	Y	Y	Y	P	P	P	Y	P	P	P	P	P	P	P	Y	Y	P	Y	Y
77*	4.2-45	Y	Y	Y	P	P	P	Y	P	P	P	P	P	P	P	Y	Y	P	Y	Y

(Continued)

TABLE 4.3-2 (cont.)

Stream No.	Table No.	Pollutants																		
		Al	As	B	Cd	Cr	Co	F	Hg	Ni	Pb	Ra	V	Zn	NH_3	COD	TOC	Phenols	TDS	TSS
78*		P	P	P	P	P	P	P	P	P	P	P	P	P	N	Y	P	Y	Y	P
80*		N	N	N	N	N	N	N	N	N	N	N	N	P	N	P	P	P	Y	Y
82*		P	P	P	P	P	P	P	P	P	P	P	P	P	P	Y	P	P	Y	N
83		P	P	P	P	P	P	P	P	P	P	P	P	P	P	Y	P	P	Y	N
84		P	P	P	P	P	P	P	P	P	P	P	P	P	P	Y	P	P	Y	N
85		P	P	P	P	P	P	P	P	P	P	P	P	P	P	Y	P	P	Y	N
86		P	P	P	P	P	P	P	P	P	P	P	P	P	P	Y	P	P	Y	N
88*		P	P	P	P	P	P	P	P	P	P	P	P	P	P	Y	P	P	Y	N
89		P	P	P	P	P	P	P	P	P	P	P	P	P	P	Y	P	P	Y	N
90*		P	P	P	P	P	P	P	P	P	P	P	P	P	N	Y	P	Y	Y	P
91*		P	P	P	P	P	P	P	P	P	P	P	P	P	N	Y	P	Y	Y	P
92		P	P	P	P	P	P	P	P	P	P	P	P	P	P	Y	P	P	Y	N
93*		P	P	P	P	P	P	P	P	P	P	P	P	P	P	Y	P	P	Y	N
94*		P	P	P	P	P	P	P	P	P	P	P	P	P	P	Y	P	P	Y	N
95*		P	P	P	P	P	P	P	P	P	P	P	P	P	P	Y	P	P	Y	N
97*		P	P	P	P	P	P	P	P	P	P	P	P	P	P	Y	P	P	Y	N
98*		P	P	P	P	P	P	P	P	P	P	P	P	P	P	Y	P	P	Y	N
99*		P	P	P	P	P	P	P	P	P	P	P	P	P	P	Y	P	P	Y	N
100		N	N	N	N	N	N	N	N	N	N	N	N	N	N	N	N	N	N	N
101		N	N	N	N	N	N	N	N	N	N	N	N	N	N	N	N	N	N	N
102		N	N	N	N	N	N	N	N	N	N	N	N	N	N	N	N	N	N	N
103		N	N	N	N	N	N	N	N	N	N	N	N	N	N	N	N	N	N	N
104		N	N	N	N	N	N	N	N	N	N	N	N	N	N	N	N	N	N	N
105		P	P	P	P	P	P	P	P	P	P	P	P	P	P	Y	P	P	Y	N
106*		P	P	P	P	P	P	P	P	P	P	P	P	P	N	Y	P	Y	Y	P
107*		P	P	P	P	P	P	P	P	P	P	P	P	P	P	Y	P	P	Y	N
108		P	P	P	P	P	P	P	P	P	P	P	P	P	P	Y	P	P	Y	N
109*		P	P	P	P	P	P	P	P	P	P	P	P	P	N	Y	P	Y	Y	P
110		P	P	P	P	P	P	P	P	P	P	P	P	P	P	Y	P	P	Y	N
111		N	N	N	N	N	N	N	N	N	N	N	N	N	N	N	N	N	N	N
114*		P	P	P	P	P	P	P	P	P	P	P	P	P	P	Y	P	P	Y	N
115*		P	P	P	P	P	P	P	P	P	P	P	P	P	P	Y	P	P	Y	N

(Continued)

TABLE 4.3-2 (cont.)

Stream No.	Table No.	Pollutants																		
		Al	As	B	Cd	Cr	Co	F	Hg	Ni	Pb	Ra	V	Zn	NH_3	COD	TOC	Phenols	TDS	TSS
116*		P	P	P	P	P	P	P	P	P	P	P	P	P	P	Y	P	P	Y	N
118*		P	P	P	P	P	P	P	P	P	P	P	P	P	P	Y	Y	Y	Y	Y
122*	4.2-12	P	P	P	P	P	P	P	P	P	P	P	P	P	P	Y	Y	P	Y	Y

* Indicates streams that come into contact with the environment.

Key: Y = Present
N = Not Present
P = Probably Present
U = Presence Unknown

Source: DRI estimates.

TABLE 4.3-3. POLLUTANT CROSS-REFERENCE FOR SOLID STREAMS

		Pollutants/Hazards														
Stream No.	Table No.	Ag	As	Ba	Cd	Cr	Hg	Pb	Se	Pesti-cides	Ignit-ability	Corro-sivity	Reactivity, Explo.	Radio Activity	Phyto-toxicity	Mutageni-city
1*	4.2-4	Y	Y	Y	Y	Y	Y	Y	Y	N	Y	U	P	P	U	P
2*	4.2-4	Y	Y	Y	Y	Y	Y	Y	Y	N	Y	U	P	P	U	P
17*	4.2-7, 4.2-8, 4.2-9	Y	Y	Y	Y	Y	Y	Y	Y	N	N	U	U	P	U	U
30		Y	Y	Y	Y	Y	Y	Y	Y	N	Y	U	P	P	U	P
35*	4.2-3	Y	Y	Y	Y	Y	Y	Y	Y	N	Y	U	P	P	U	P
36*	4.2-6	Y	Y	Y	Y	Y	Y	Y	Y	N	P	U	P	P	P	P
60		N	N	N	N	N	N	N	N	N	N	Y	N	N	U	U
81		N	N	N	N	N	N	N	N	N	N	Y	N	N	U	U

* Indicates streams that come into contact with the environment.

Key: Y = Present
N = Not Present
P = Probably Present
U = Presence Unknown

Source: DRI estimates.

SECTION 5

POLLUTION CONTROL TECHNOLOGY

This section presents an inventory of pollution control technologies and discusses, in depth, some representative controls for each medium (air, water and solid waste). The inventory expands beyond describing the technologies that have been proposed for the MIS-Lurgi processes at Tract C-b. That is, it discusses alternate and additional technologies that provide varying levels of control. Although the inventory is quite extensive, other possibilities may exist and should not be excluded from consideration. Changes in the design of the plant complex, changes in the assumptions made (see Section 1.5), and/or improved data from future testing could lead to the selection of different controls.

Each subject area for control (e.g., particulate control) begins with an inventory of available technical approaches, or technologies. Promising new control technologies not yet applied commercially, even in related industries, are also included in the inventory but are not described in detail. Such new technologies may be applicable to the oil shale industry if they are sufficiently developed and tested in the future. The inventory is followed by a discussion of the most important considerations in selecting a control. Finally, a more detailed analysis of performance and cost is presented for the control technologies that have been considered by Cathedral Bluffs Shale Oil Company in conjunction with the MIS-Lurgi processes (see Sections 2 and 3 for descriptions of the case studies which include the proposed processes and technologies).

The detailed analysis seeks to estimate pollution control performance and cost. Performance estimates generally require no more than conceptual designs; however, the reliability of the performance estimates varies depending upon the application. The estimates should be highly reliable where a proven technology is applied to a stream for which experience exists (e.g., flue gas desulfurization) but may be much less accurate for controls which require testing and which are applied to unconventional streams (e.g., biological oxidation). All performance levels are given for instantaneous control and reflect optimal operation, which may be higher than the average level of performance actually achieved. All cost estimates are in mid-1980 dollars and are taken to the level of detail believed to be necessary to achieve ±30% accuracy. This level of accuracy is based on the cost of equipment already built and operating in related industries.

5.1 AIR POLLUTION CONTROL

As in other industrial and oil shale operations, the MIS-Lurgi plant--from mining activities to final product storage and transfer--will generate particulate and gaseous component emissions. The primary air emissions are:

- Particulates, TPM
- Sulfur Dioxide, SO_2
- Nitrogen Oxides, NOx
- Carbon Monoxide, CO
- Hydrocarbons, HC.

This section describes the current, commercially available alternative systems for controlling the above primary pollutants. The following subsections provide inventories of control technologies for each of the air pollutants, a discussion of advantages and disadvantages, and important points to consider in selecting a particular technology. Performance, design, and cost data for the leading technologies examined are also presented.

5.1.1 Particulate Control

Particulate matter is generated during the mining, crushing, conveying, and processing of oil shale. Particulates are emitted from fugitive sources such as conveyor belts and from point sources such as flue gas stacks. Federal and State standards and regulations limit these particulate emissions because of their potentially hazardous effects on human health and the environment.

Inventory of Control Technologies--

As shown in Figure 5.1-1, particulate control can be divided into two general categories:

- Control of point sources
- Control of fugitive sources.

The particulate matter from a point source is confined within some equipment boundaries and is controlled by passing the dust-laden stream through a control device. Fugitive particulate matter is unconfined and is generally controlled by wet suppression techniques which are generally not as efficient as the point source control techniques. Table 5.1-1 presents a listing and review of particulate control technologies.

Control of point sources. There are two primary classes of particulate control equipment for point sources: dry and wet. Both classes offer processes that are feasible for particulate control in oil shale applications. Dry dust collectors can only be used with dry dusts. Sticky particulates tend to clog the dry collector and reduce its performance. In such cases, wet collectors are used.

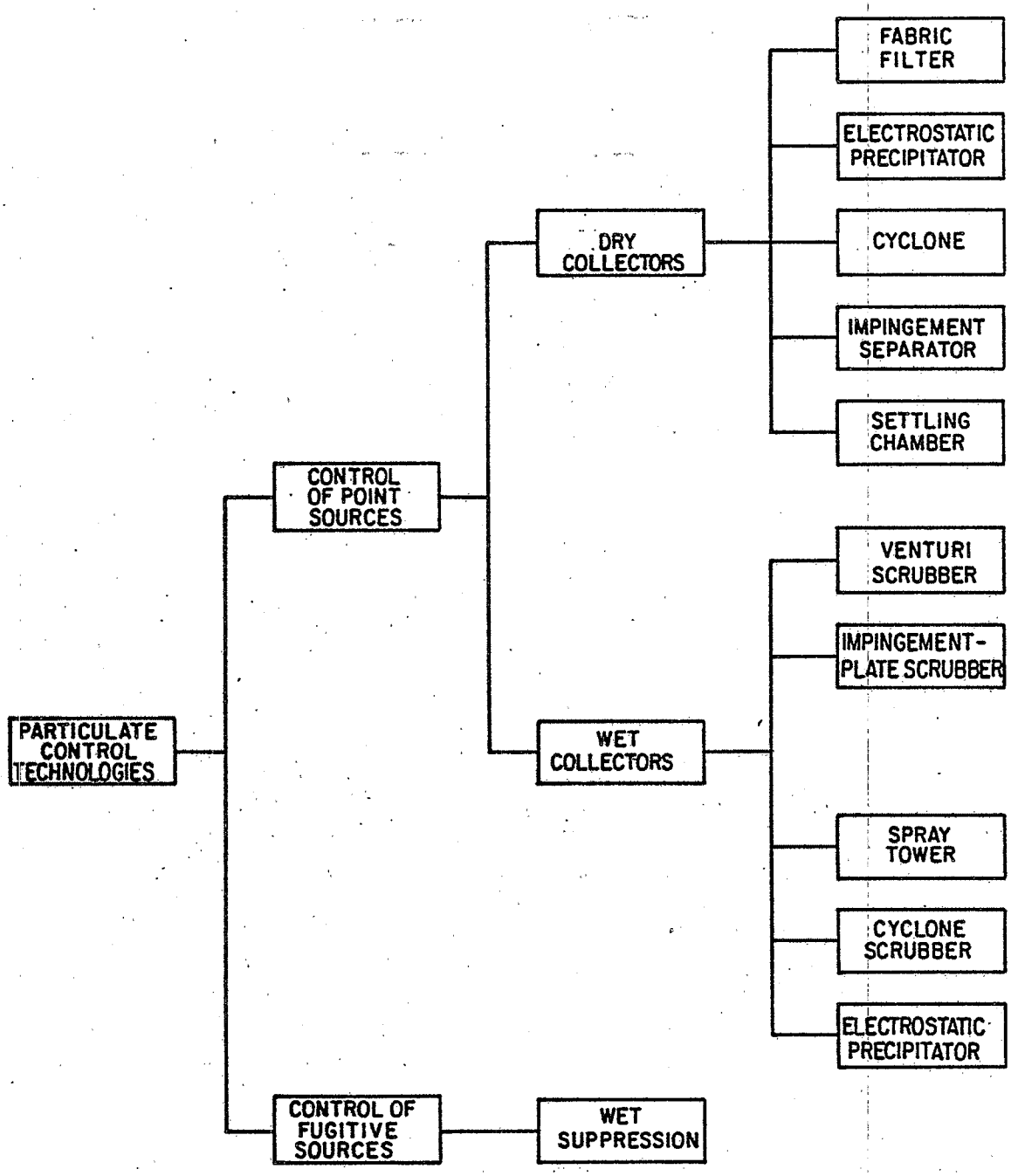

SOURCE: SWEC

FIGURE 5.1-1 PARTICULATE CONTROL TECHNOLOGIES

TABLE 5.1-1. KEY FEATURES OF PARTICULATE CONTROL TECHNOLOGIES

Control Technology	Operating Principle	Performance	Development Status	Advantages	Disadvantages
DRY COLLECTORS					
Fabric Filter	The dust-laden gas passes through woven fabric or felt material which filters out the dust, allowing the gas to pass on. The filters are cleaned by mechanical shaking or reverse jet compressed air flow.	Removal efficiency is 99.7-99.9%. Operating temperature is limited to 600°F, depending on the fabric material, and the pressure drop is typically 4 in. H_2O.	Commercially proven.	High removal efficiency and low operating cost.	The fabric can be sensitive to gas humidity, velocity and temperature, as well as particulate characteristics.
Electrostatic Precipitator	Particles suspended in a gas are exposed to gas ions in an electrostatic field. These particles then become charged and migrate under the action of the field to collector plates.	Removal efficiency is 99-99.9%. Operating temperature is limited to 850°F, and the pressure drop is typically 1 in. H_2O.	Commercially proven.	High removal efficiency and a very low pressure drop.	High energy consumption. Sensitive to varying process conditions and particle properties.
Cyclone	The dust-laden gas enters a cylindrical or conical chamber tangentially at one or more points and leaves through a central opening. The dust particles, because of their inertia, will tend to move toward the outside separator wall and then into a receiver.	Removal efficiency is 50-90%. Operating temperature is limited to 1,000°F, and the pressure drop is typically 1-5 in. H_2O.	Commercially proven.	Low capital and operating cost. Good as a gas precleaner before a more efficient removal device.	Low removal efficiency for small particles.
Impingement Separator	The dust-laden gas impinges on a body, and the gas is deflected while the dust particle, by virtue of its greater inertia, collects on the surface of the body.	Removal efficiency is 0-80%. Operating temperature is limited to 1,000°F, and the pressure drop is typically 4 in. H_2O.	Commercially proven.	Low capital and operating cost. Good as a gas precleaner before a more efficient removal device.	Low removal efficiency.
Settling Chamber	The simplest type of dust collection equipment, consisting of a chamber in which the gas velocity is reduced to enable dust to settle out by the action of gravity.	Removal efficiency is 0-50%. Operating temperature is limited to 1,000°F, and the pressure drop is typically 0.1 in. H_2O.	Commercially proven.	Low operating cost and a low pressure drop.	Low removal efficiency and a very large space requirement.

(Continued)

TABLE 5.1-1 (cont.)

Control Technology	Operating Principle	Performance	Development Status	Advantages	Disadvantages
WET COLLECTORS					
Venturi Scrubber	Gas and liquid are passed concurrently through a venturi throat at 200 to 800 ft/sec.	Removal efficiency is 95-99%. Operating temperature is limited to 40-700°F, and the pressure drop is typically 1-50 in. H_2O.	Commercially proven.	High removal efficiency.	Efficiency drops for small particles.
Impingement-Plate Scrubber	The high velocity gas passes through a perforated tray with an impingement baffle above each perforation. The gas atomizes the liquid on the tray into droplets which then collect the dust.	Removal efficiency is 80-99%. Operating temperature is limited to 40-700°F, and the pressure drop is typically 1-20 in. H_2O.	Commercially proven.	High removal efficiency.	Efficiency drops for small particles.
Spray Tower	Liquid droplets produced by spray nozzles settle through rising gas stream and remove dust by impaction.	Removal efficiency is 50-80%. Operating temperature is limited to 40-700°F, and the pressure drop is typically 0.5 in. H_2O.	Commercially proven.	Low pressure drop and a low operating cost.	Low removal efficiency.
Cyclone Scrubber	Liquid is sprayed into the gas stream and removes the dust particles by inertial impaction.	Removal efficiency is 50-75%. Operating temperature is limited to 40-700°F, and the pressure drop is typically 2 in. H_2O.	Commercially proven.	Low pressure drop and a low operating cost.	Low removal efficiency.
Electrostatic Precipitator	SEE DRY COLLECTORS				
Wet Suppression	Fugitive dust generated in the crushing and handling of the oil shale is sprayed with a foam suppressant made from a water/surfactant mixture.	Removal efficiency is 95-99%. Operating temperature is limited to 40-200°F.	Commercially proven.	Low capital and operating cost and a high removal efficiency.	Used only for conveyor transfer points and crushing and grinding operations.

Source: SWEC based on information from Research and Education Association, 1980.

Dry particulate removal from gases can be accomplished by several methods (shown in Figure 5.1-1 and reviewed in Table 5.1-1). The baghouse (fabric filter) collector operates by passing the dust-laden gas through a fabric network that acts as a dust filter. Its removal efficiency is over 99% and operating costs are low compared to other approaches. The electrostatic precipitator, which also has a high removal efficiency, affords separation of dust by passing the dust-laden gas through an electrostatic field. The dust particles become charged and migrate to collector plates. Another technique is the cyclone separator which operates on the principle of centrifugal force. The dust-laden gas enters the chamber tangentially. The dust particles have a higher inertia than the gas, so they travel to the wall of the cylindrical or conical chamber and then into a receptacle. The removal efficiency for cyclones varies from 50 to 90 percent. In the impingement process, the dust-laden gas impinges on a body which collects the particles as the gas deflects around the body. The removal efficiency is 0 to 80 percent. The simplest mechanical separator is the settling chamber. The dust just settles to the bottom of the tank due to its heavier mass, resulting in a removal efficiency from 0 to 50 percent.

Wet collectors require mixing the dust-laden gas with an aqueous solution that captures and removes the dust particles from the gas stream. Examples of such equipment are shown in Figure 5.1-1 and described in Table 5.1-1. In the venturi scrubber, the gas and liquid pass through a throat at a high velocity, promoting collisions between the dust and liquid droplets. These units require a high pressure drop (~50 in. H_2O) and have removal efficiencies of greater than 90 percent. Another wet scrubber, the impingement-plate type, consists of a perforated tray with an impingement baffle located above each perforation. A liquid level maintained over the trays collects the dust as the gas passes through it. These units are similar to the venturi scrubber and have about the same removal efficiencies; however, the process requires a larger pressure drop across the plates. Another type of wet scrubber is the spray tower; it utilizes countercurrent spraying of liquid droplets to remove the dust particles by impaction at an efficiency of 50 to 80 percent. The operation of the wet cyclone scrubber is similar to that of the dry cyclone except liquid is introduced into the gas stream, removing the dust by inertial impaction. The removal efficiency of the wet cyclone is 50 to 75 percent. The wet electrostatic precipitator operates under the same principle and at about the same efficiency as the dry precipitator.

<u>Control of fugitive sources</u>. Wet dust suppression can be used for the containment of fugitive dust. This process consists of spraying the dust source with water or a foam suppressant which traps the dust and prevents it from becoming airborne. The foam sprays are relatively inexpensive, consume less water than pure water sprays, and are very effective. In a foam spray system, foam is produced by pumping a mixture of water and a surfactant through an air atomizing nozzle which produces small bubbles of approximately 100 to 200 microns. These wet bubbles are broken by contact with dust, coating the particle. The foam is only effective when applied directly to the source, such as on a conveyor, or to a falling stream of material, such as at a conveyor transfer point. Once the wetted dust agglomerates with other particles, it no longer becomes airborne at subsequent transfer points.

The suppression (or removal) efficiency is 95 to 99% in terms of the material contacted.

Paving the heavily traveled roads with a hard surface and providing vegetative covers for the disturbed areas are additional technologies for reducing fugitive dust emissions. These technologies are described in Section 5.3.

Particulate Control Technologies Analyzed--

The MIS-Lurgi plant has several processing areas where particulate matter is generated and must be controlled. The particulates are produced either in the form of point source dust or as fugitive dust from various operations, such as raw shale mining, crushing, conveying and storage, Lurgi processed shale pyrolysis and moisturizing, and solid waste handling and disposal.

Dry dust is generated at point sources, such as the primary and secondary crushers, closed conveyor transfer points, and enclosed ore storage areas. For these point sources, baghouses were examined for particulate removal due to their high removal efficiency, relatively low operating costs, and the dry nature of the particulate.

The flow rates and particulate removal efficiencies reported by Cathedral Bluffs (Occidental Oil Shale, Inc. and Tenneco Shale Oil Co., April 1981) were used as the design basis for estimating the size and cost of the baghouses. Depending upon the type of dust, particle size distribution, and grain loading, the baghouses were designed with an air-to-cloth ratio of 4.8-7.4 to 1 (ACFM to sq. ft. of cloth), using Dacron HCE filter bags. The baghouses are equipped with adjustable pulse durations and cycle times for compressed air discharge through rotary airlock valves. When in multiples, the baghouses are manifolded to a common self-cleaning inlet, allowing part of any baghouse system to be shut down for repairs without taking the entire baghouse out of service.

Additional point source dust is generated in the Lurgi flue gas discharge system and in the processed shale quencher/moisturizer. The flue gas emerges from the waste heat recovery boilers at a temperature in excess of 425°F, which is well above the design temperature (275°F) for the polyester fabric baghouses. The dust produced in the quencher/moisturizer is sticky due to the presence of water. The sticky dust particles tend to clog the fabric, impeding the performance of the baghouses. For these reasons, conventional baghouses cannot be employed in these two dust control applications.

An electrostatic precipitator (ESP) was examined for the control of dust in the Lurgi flue gas. The performance of an ESP, unlike baghouses, is not affected adversely by the high temperature and stickiness of the dust. On the contrary, within limits, these characteristics of the dust increase the efficiency of dust removal by ESP. The use of an ESP is in agreement with the plans presented by Cathedral Bluffs, but design details were not given by the developer (Occidental Oil Shale, Inc. and Tenneco Shale Oil Co.,

April 1981). Information provided by Research Cottrell Corporation (an ESP vendor) was used in conjunction with Stone and Webster Engineering Corporation's (SWEC) in-house experience to estimate the design and cost of an ESP for the Lurgi flue gas dust control application.

For the control of sticky particulates from the processed shale quencher/moisturizer, a venturi wet scrubber was analyzed. This scrubber is particularly suited for applications where the venturi sludge can be reused, e.g., in processed shale moisturizing. Again, the information published by Cathedral Bluffs was used as the basis for the design and cost estimates.

Fugitive dust is generated from mining and blasting, raw and processed shale conveying, conveyor transfer points, baghouse dust discharge points to conveyor systems, truck loading and unloading, and disposal operations. These fugitive sources of particulates are controlled by water and foam spray suppression. This system is inexpensive and offers low water consumption and high removal efficiency.

In addition to the major particulate sources mentioned above, there are other point sources, such as the FGD (Case Study A) or boiler stacks (Case Study B), for which no controls are applied.

Table 5.1-2 lists the design parameters for the particulate control technologies examined, and Table 5.1-3 gives the design basis for the ESP. The capital, operating, and annual costs for the particulate control equipment are presented in Table 5.1-4. Cost curves based on the specific designs used for the baghouses, ESP, and venturi wet scrubber examined in this manual are provided in Figures 5.1-2, 5.1-3 and 5.1-4, respectively.

Other Particulate Control Technologies Analyzed--

In addition to the ESP, another technology was analyzed for the control of particulates from the Lurgi flue gas--a spray dryer/baghouse combination. This technology has not been proposed by Cathedral Bluffs, but it is judged to be applicable to the flue gas.

As mentioned previously, the flue gas is at a fairly high temperature at the point of control. Conventional baghouses cannot be used until the gas is cooled to below the design temperature. This can be accomplished with the technology combination analyzed. First the flue gas is cooled in the spray dryer by evaporating some of the water, then the baghouses are used for actual dust control.

The spray dryer is a commonly used device for applications where gas adsorption on solids is desired. With this technology, a slurry or concentrated solution of the sorbent material is sprayed, or atomized, in the hot gas, whereby the water evaporates and the sorbent falls out of the solution in the form of a powder. The gas is then adsorbed on the powder. Additionally, the evaporation of water cools the gas. The application of a spray dryer to the Lurgi flue gas is based on the latter phenomenon. Since one advantage of this system is that it can use high TDS waters, some of the processing wastes (e.g., the kettle evaporator sludge, FGD sludge) can be used for flue gas

TABLE 5.1-2. PARTICULATE CONTROL EQUIPMENT AND DESIGN PARAMETERS

Stream Number	Control Description	Control Location	Number of Units	Flow Rate Each (ACFM)	Dust Load (lb/hr)	Removal Efficiency (%)	Total Particulate Emissions (lb/hr)
7	Baghouse	Conveyor Transfer Points (from production shaft to conveyor transfer tower)	2	2,000	184.0	99.5	0.92
	Baghouse		2	2,000	221.0	99.5	1.11
	Baghouse		1	2,000	36.4	99.5	0.18
8	Baghouse	Raw Shale Storage Load-in	2	12,500	220.8	99.5	1.10
	Baghouse		2	12,500	184.4	99.5	0.92
9	Baghouse	Raw Shale Crushing and Screening	1	142,000	9,006.7	99.5	45.03
10	Baghouse	Conveyor Transfer Points (from crushing and screening to fine ore transfer tower)	1	16,000	1,015.0	99.5	5.08
11	Baghouse	Fine Ore Storage Load-in	1	1,200	75.8	99.0	0.76
14	Baghouse	Fine Ore Storage Load-out	2	2,000	18.0	99.5	0.09
15	Electrostatic Precipitator	Lurgi Flue Gas Discharge System	8	198,000 (88,725 SCFM)	365,000.0	99.9	365.00
18	Venturi Wet Scrubber	Processed Shale Quencher/ Moisturizer	1	38,600	1,207.0	98.0	24.14
6,120, 121	Water and Foam Sprays	Conveyor Transfer Points, Open Stockpiles, etc.	--	--	--	50-98.5*	115.23

* The removal efficiency for water sprays is 50% and that for foam sprays is either 85% or 98.5%, depending upon the application.

Source: Occidental Oil Shale, Inc. and Tenneco Shale Oil Co., April 1981.

TABLE 5.1-3. MAJOR ITEMS IN ELECTROSTATIC PRECIPITATOR*

Capital Cost Items	Operating Cost Items
Chambers (8)	Electricity 2,711 kW
Collecting Plates	Maintenance
Transformer Rectifiers	
Fans and Motors	
Dampers and Ductwork	
Supports	
Handrailing and Grating	
Piping	
Concrete and Foundations	
Painting	
Insulation	
Instrumentation and Controls	
Discharge Electrodes	
Electrical	
Bins	
Discharge and Conveying System Rappers	

* Design basis: 198,000 ACFM/unit.

Source: SWEC estimates based on information provided by Research Cottrell Corp.

TABLE 5.1-4. COST OF PARTICULATE POLLUTION CONTROL

Stream Number	Control Description	Control Location	Number of Units	Flow Rate Each (ACFM)	Fixed Capital Cost ($000's)	Total Annual Operating Cost ($000's)	Total Annual Control Cost ($000's)*
7	Fabric Filter	Conveyor Transfer Points (from production shaft to conveyor transfer tower)	4	2,000	104	16	42
7	Fabric Filter	Conveyor Transfer Points (from raw shale stockpile to conveyor transfer tower)	1	2,000	20	4	9
8	Fabric Filter	Raw Shale Storage Load-in	4	12,500	250	62	124
9	Fabric Filter	Raw Shale Crushing and Screening	1	142,000	838	143	348
10	Fabric Filter	Fine Ore Storage Transfer Tower	1	16,000	96	27	51
11	Fabric Filter	Fine Ore Storage Load-in	1	1,200	13	1	4
14	Fabric Filter	Fine Ore Storage Load-out	2	2,000	41	7	17
15	Electrostatic Precipitator	Lurgi Flue Gas Discharge System	8	198,000	51,800	2,737	10,464
18	Venturi Wet Scrubber	Lurgi Processed Shale Quencher/Moisturizer	1	38,600	180	18	45
6,120, 121	Water and Foam Sprays	Conveyor Transfer Points, Open Stockpiles, etc.	--	--	502	850	987
TOTAL					53,844	3,865	12,091

* See Section 6 for details on computation of the total annual control cost.

Source: DRI estimates based on information provided by SWEC.

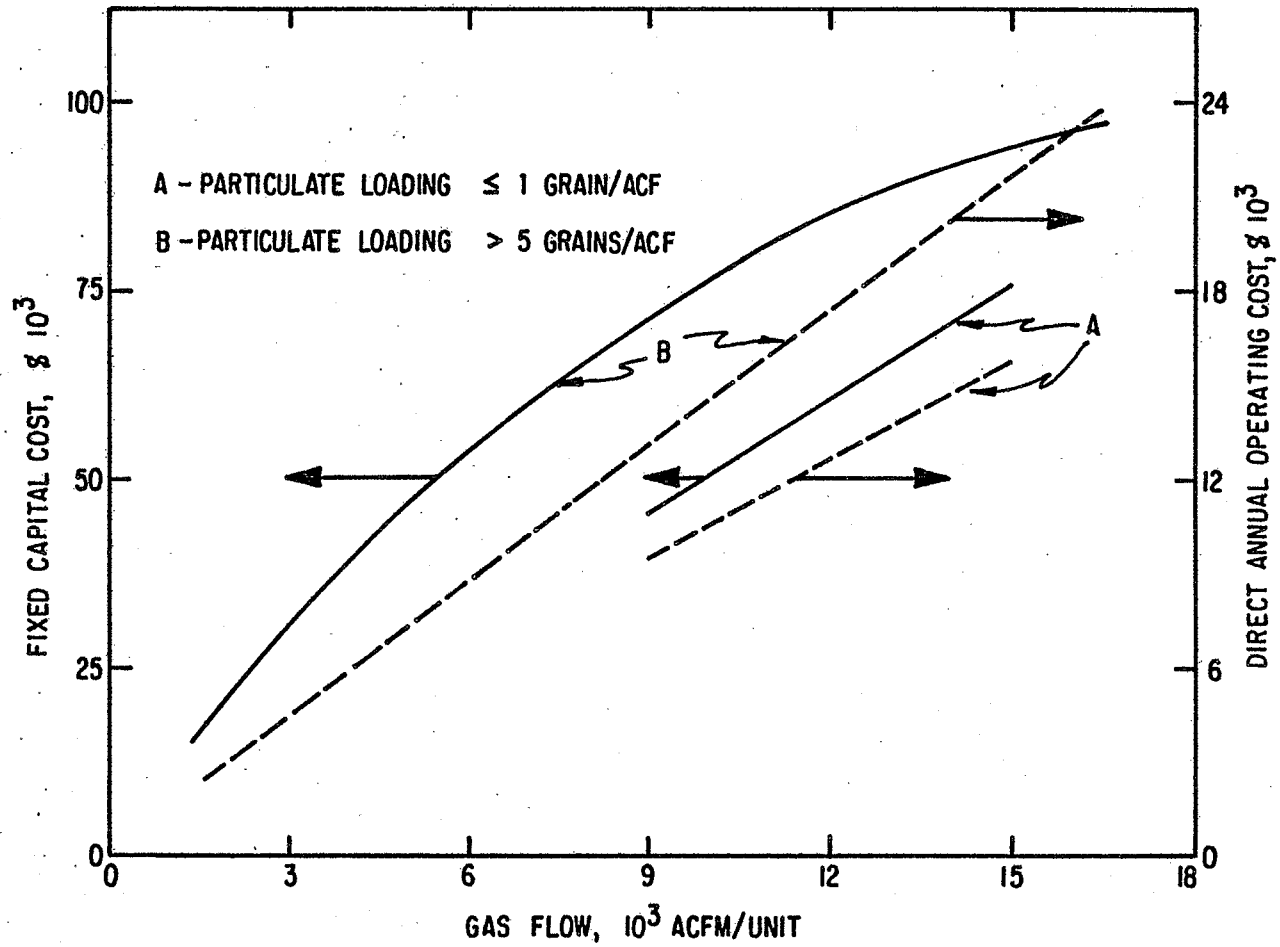

SOURCE: DRI based on information provided by SWEC

FIGURE 5.1-2 COST OF PARTICULATE CONTROL WITH BAGHOUSES

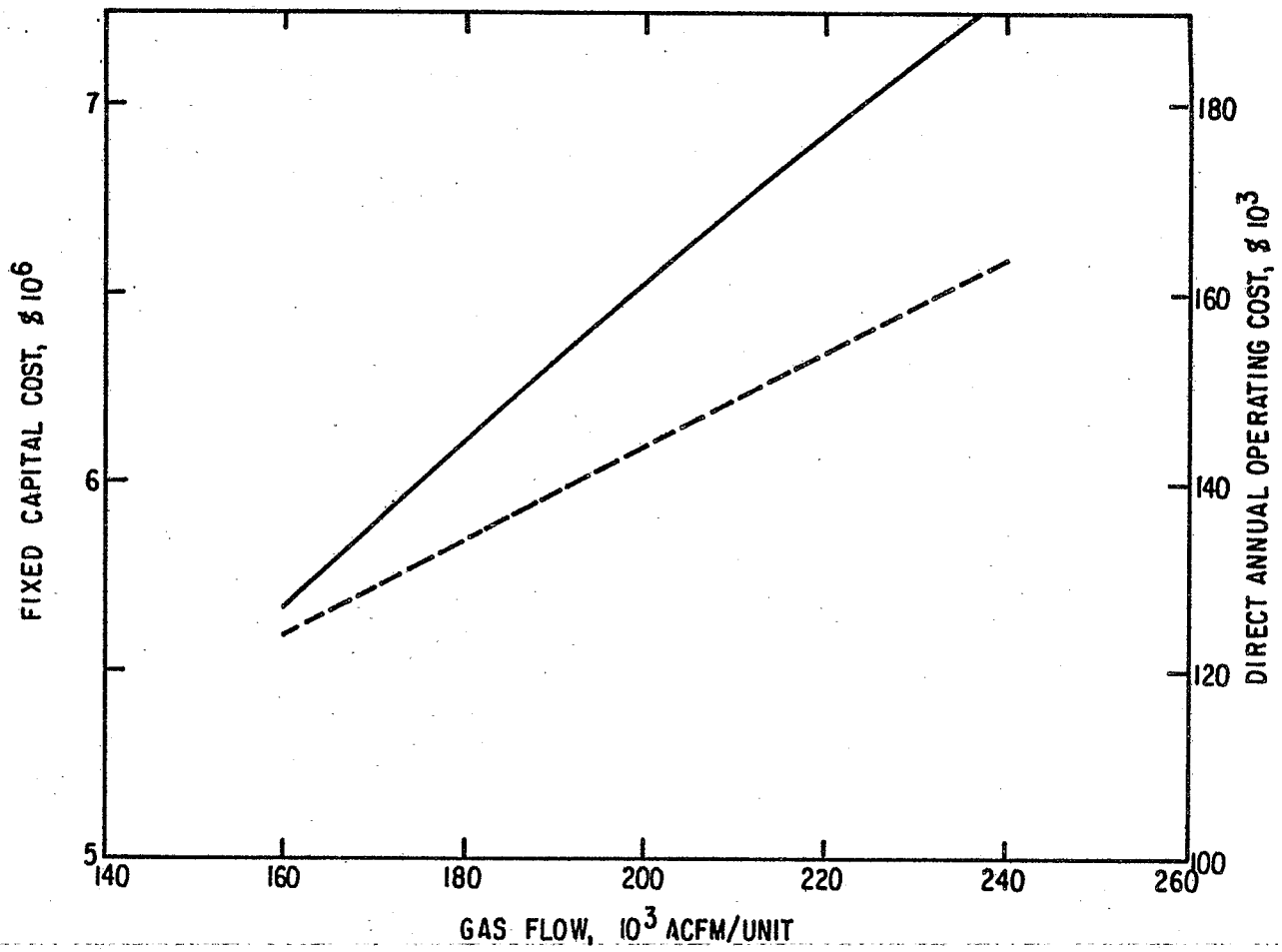

SOURCE: DRI based on information provided by SWEC

FIGURE 5.1-3 COST OF PARTICULATE CONTROL WITH ELECTROSTATIC PRECIPITATORS

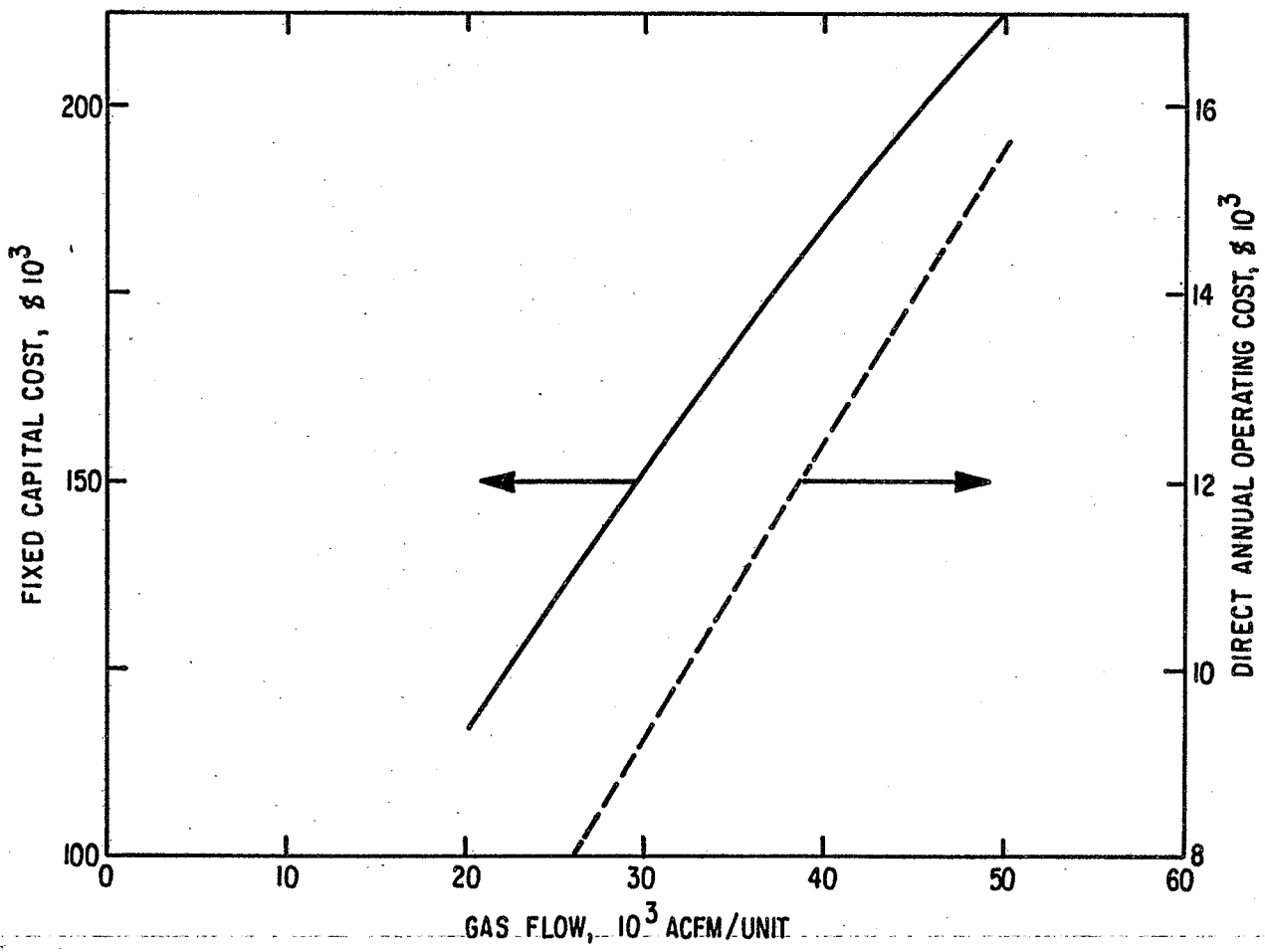

SOURCE: DRI based on information provided by SWEC

FIGURE 5.1-4 COST OF PARTICULATE CONTROL WITH VENTURI WET SCRUBBERS

cooling. Increased particulate loading to the baghouse, however, may have an adverse effect on its performance and/or operating cost.

The temperature of the flue gas, while within the operating range of the baghouse, is kept above the dew point so that water condensation does not occur. With these conditions, the polyester fabric baghouses can be used for dust control.

Table 5.1-5 lists the major items in the spray dryer/baghouse system and includes the capital and operating costs. Figure 5.1-5 provides a cost curve for the system.

TABLE 5.1-5. MAJOR ITEMS IN THE SPRAY DRYER/BAGHOUSE SYSTEM*

Capital Cost Items	Operating Cost Items
Spray Coolers (8) 42' diameter × 42' (constructed of 3/8" plate) Niro Rotary Atomizer Model S-350	Maintenance
	Direct Annual Operating Cost, $\$10^3$ 1,266
Pumps (2 per cooler) 52 gpm @ 20 wt% solids Pump motor @ 10 HP	
Coolant Supply Tanks (8) 10' diameter × 10' 6,000 gpm capacity	
Support Steel	
Agitators and Mixers	
Site Preparation and Foundations	
Ductwork and Dampers	
Instrumentation and Controls	
Electrical	
Insulation	
Piping	
Fixed Capital Cost, $\$10^3$ 26,384	

* Design basis: 170,000 ACFM/unit.

Source: SWEC.

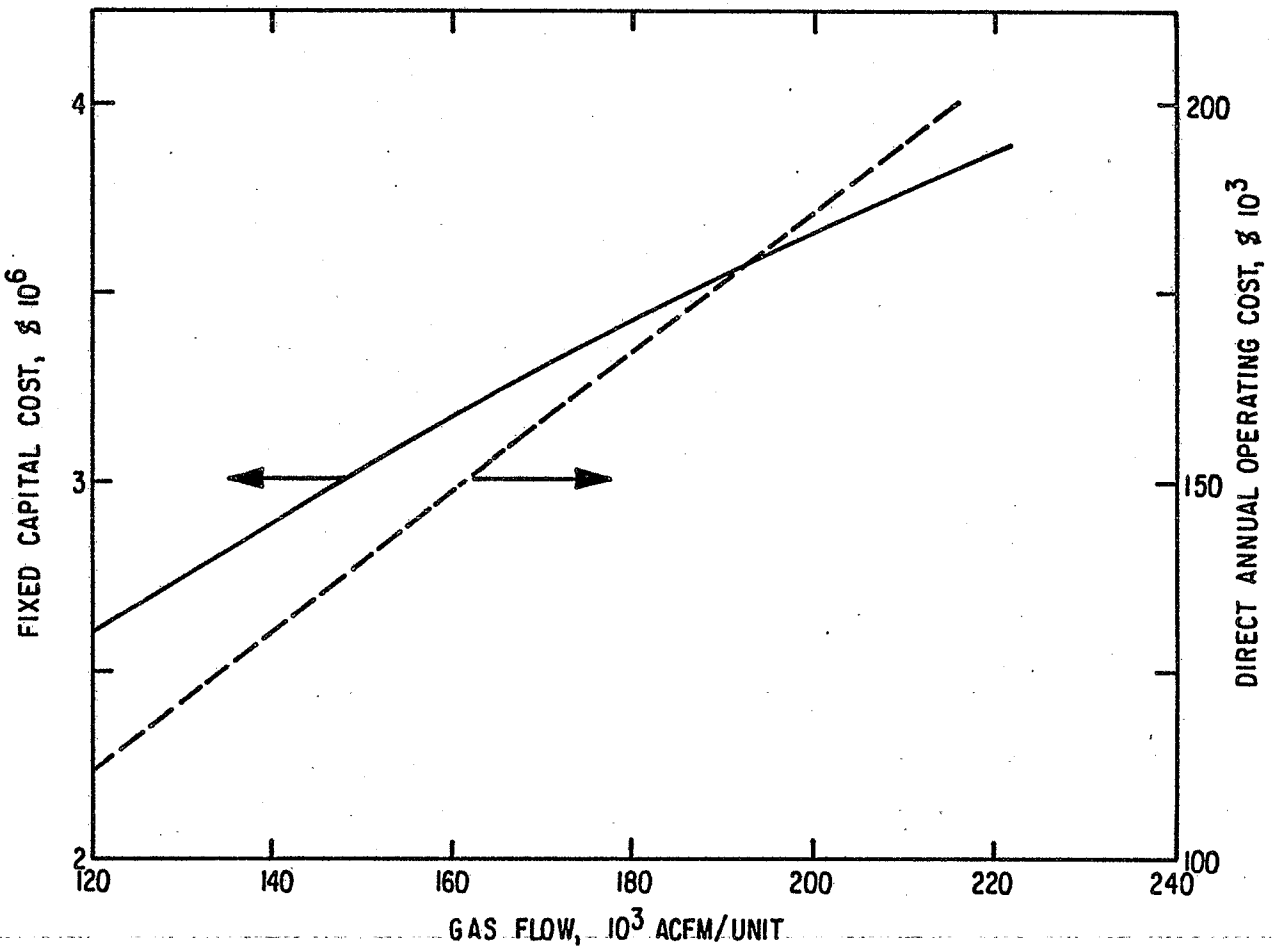

SOURCE: DRI based on information provided by SWEC

FIGURE 5.1-5 COST OF PARTICULATE CONTROL WITH SPRAY DRYER/BAGHOUSE SYSTEM

Total Particulate Emissions--

The controlled particulates from the point as well as fugitive sources are summarized in Table 5.1-6, along with the type of control technology examined for each source. The uncontrolled emissions are also included in the table to give total particulate emissions from the commercial operation. Estimates for these emissions were taken from the Cathedral Bluffs PSD permit application (Occidental Oil Shale, Inc. and Tenneco Shale Oil Co., April 1981).

TABLE 5.1-6. TOTAL PARTICULATE EMISSIONS FROM THE PLANT

Stream Number	Emission Source	Control Description	Particulate Emissions (lb/hr)
4	Mine Exhaust Shaft	--	71.83
7	Production Shaft Conveyor Transfer Points	Baghouse	2.21
8	Raw Shale Storage Load-in	Baghouse	2.02
9	Raw Shale Crushing and Screening	Baghouse	45.03
10	Fine Ore Storage Transfer Tower	Baghouse	5.08
11	Fine Ore Storage Load-in	Baghouse	0.76
14	Fine Ore Storage Load-out	Baghouse	0.09
15	Lurgi Flue Gas Discharge System	Electrostatic Precipitator	365.00
18	Processed Shale Quencher/ Moisturizer	Venturi Wet Scrubber	24.14
79	Flue Gas Desulfurization Stack	--	67.08*
5,119	Diesel Equipment	Catalytic Converters	6.00
6,120, 121	Conveyor Transfer Points, Open Stockpiles, etc.	Water and Foam Sprays	115.23
TOTAL			704.47

* A value of 151 lb/hr was estimated by SWEC.

Source: Occidental Oil Shale, Inc. and Tenneco Shale Oil Co., April 1981, except as noted.

5.1.2 Sulfur Control

Processing of sulfur-containing fossil fuels will result in emissions of sulfur compounds, such as H_2S, COS, CS_2, RSH, etc., or their combustion product, SO_2. Federal and State standards limit sulfur emissions because of their potentially hazardous effects on human health and the environment.

Inventory of Control Technologies--

Two general categories of technologies are available for the control of sulfur emissions: (1) removal of sulfur compounds from flue gases after combustion (sulfur dioxide removal, or flue gas desulfurization) and (2) removal of sulfur compounds from gases prior to combustion (hydrogen sulfide removal). Several technologies in both categories offer recovery of sulfur in a useful form, while others chemically fix the sulfur compounds on a reagent which then requires disposal.

Sulfur dioxide control (flue gas desulfurization). Removal of sulfur compounds from flue gases--that is, flue gas desulfurization (FGD)--is based on the physical and chemical properties of SO_2 because fuel-based sulfur is usually converted to SO_2 upon combustion. Flue gas desulfurization can be divided into two categories:

- Wet scrubbing
- Dry scrubbing.

Wet scrubbing utilizes a solution or a slurry to absorb the SO_2. Dry scrubbing uses either a dry reagent bed or an atomized solution of an aqueous reagent at a high temperature to remove the SO_2. Both categories can be divided into regenerable and nonregenerable processes. The different types of SO_2 removal processes are shown in Figure 5.1-6, and Table 5.1-7 gives a brief description of each process.

Wet scrubbing--The regenerable wet scrubbing processes generally employ a clean alkaline solution to absorb SO_2 in a scrubber. The resulting spent solution is treated with an insoluble alkali makeup which precipitates the absorbed SO_2. The insoluble alkali sulfite and sulfate crystals are then separated from the regenerated solution in a clarifier and possibly a second dewatering step such as a centrifuge. The spent alkali sludge is treated by calcining, evaporation, stripping, etc., which drive off the SO_2. The SO_2 can then be converted to a useful form of sulfur such as sulfuric acid or elemental sulfur.

In the nonregenerable processes, this spent alkali sludge is sent to a disposal area for land filling.

Dry scrubbing--The dry scrubbing processes use a concentrated slurry of alkaline crystals which are atomized and injected into the flue gas stream as it passes through a spray dryer. The scrubbing slurry absorbs the SO_2 and is dried by the hot flue gases. The dried spent alkali is then removed from the flue gas by an electrostatic precipitator or a baghouse.

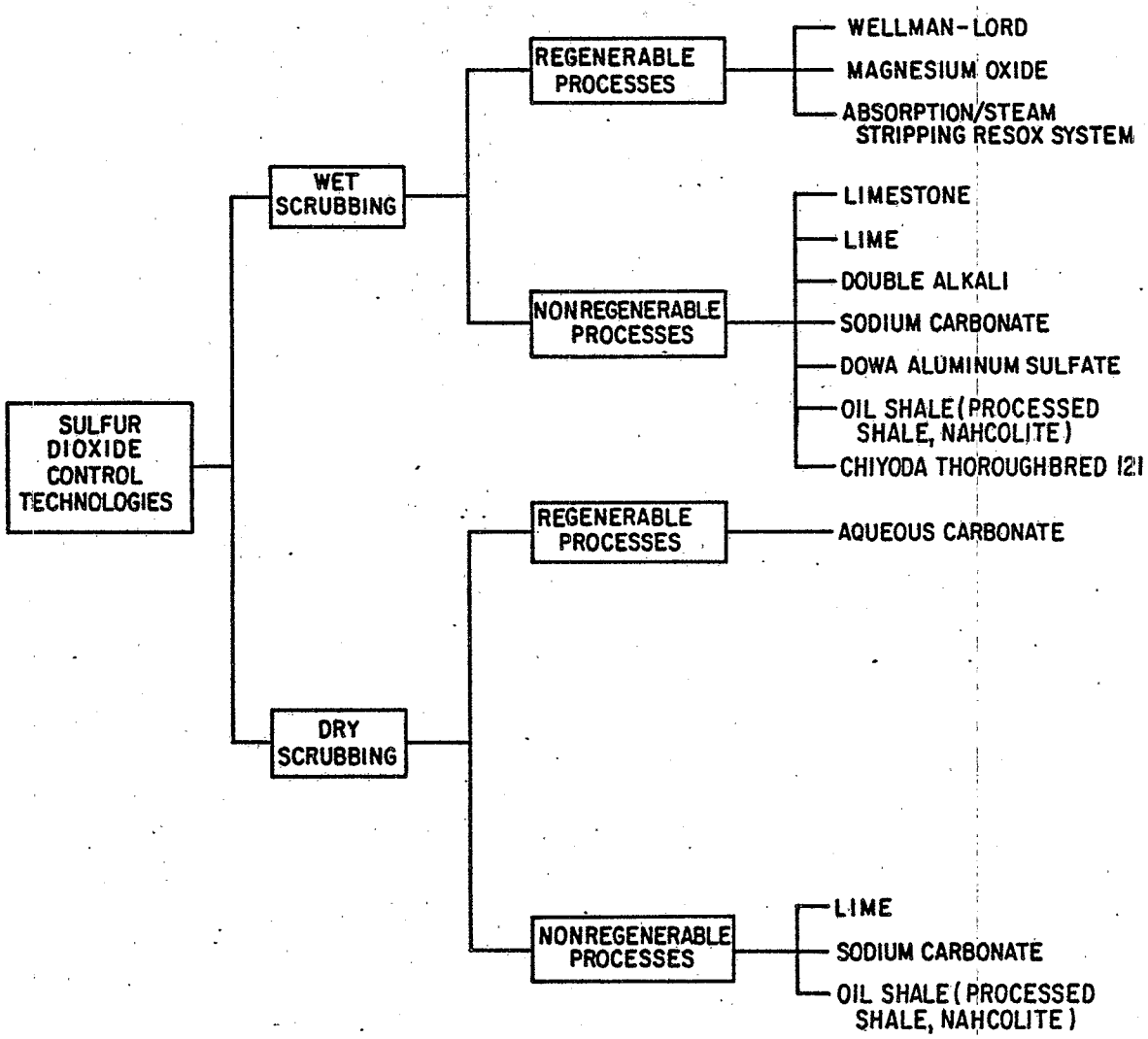

SOURCE: SWEC

FIGURE 5.1-6 SULFUR DIOXIDE CONTROL TECHNOLOGIES

TABLE 5.1-7. KEY FEATURES OF SULFUR DIOXIDE CONTROL TECHNOLOGIES

Control Technology	Operating Principle	Performance*	Development Status	Advantages	Disadvantages
REGENERABLE WET SCRUBBING PROCESSES					
Wellman-Lord[a]	Absorbs SO_2 with a sodium sulfite/bisulfite solution. A bleed stream of the rich solution is sent to evaporators where SO_2 and water are driven off and the reagent is regenerated.	Reduces the outlet flue gas SO_2 concentration to 50 ppmv.	About 30 commercial units are in operation in the U.S. and Japan.	Produces a concentrated SO_2 stream which can be used to make salable sulfur or sulfuric acid.	Requires fuel for the solution evaporators.
Magnesium Oxide[a]	Absorbs SO_2 with a magnesium oxide slurry. A bleed stream of the spent slurry is dried and calcined to regenerate the magnesium oxide and produce a dilute SO_2 stream (10% SO_2).	Reduces the outlet flue gas SO_2 concentration to 50 ppmv.	Three demonstration plants have been tested in Japan (each about 100 MW size). Two commercial units are under construction in the U.S.	Produces an SO_2 stream suitable for manufacture of sulfuric acid.	Requires fuel for the $MgSO_3/MgSO_4$ dryer and calciner.
Absorption/ Steam Stripping Resox System[a]	An aqueous solution of a suitable reagent (e.g., sodium carbonate, citric acid) absorbs the SO_2, and the solution is regenerated by indirect steam heating to evolve a concentrated SO_2 stream. The SO_2 is then reacted with crushed coal in the Resox system to produce elemental sulfur.	Reduces the outlet flue gas SO_2 concentration to 50 ppmv.	The systems have been tested in separate demonstration plants. A demonstration plant for the combined system has been proposed.	Uses a simple absorption/ steam stripping system and produces salable elemental sulfur.	Has not been demonstrated as a combined system.
NONREGENERABLE WET SCRUBBING PROCESSES					
Limestone[a]	Absorbs SO_2 with a limestone slurry. A bleed stream of the slurry is partially dewatered and disposed of in a landfill.	Reduces the outlet flue gas SO_2 concentration to 50 ppmv.	Many commercial units in operation worldwide.	Low capital and operating cost. Simple and proven process with conventional process equipment.	Has a low operability factor due to scaling, erosion and corrosion. Sulfur is nonrecoverable.
Lime[a]	Absorbs SO_2 with a lime slurry. A bleed stream of the slurry is partially dewatered and disposed of in a landfill.	Reduces the outlet flue gas SO_2 concentration to 50 ppmv.	Many commercial units in operation worldwide.	Very similar to the limestone process and can potentially give a greater SO_2 removal efficiency than limestone.	Lime costs are rising rapidly because of higher energy costs. Sulfur is nonrecoverable.

(Continued)

TABLE 5.1-7 (cont.)

Control Technology	Operating Principle	Performance*	Development Status	Advantages	Disadvantages
Double Alkali[a]	Uses two alkaline solutions, sodium hydroxide and sodium sulfite, to convert SO_2 to sodium bisulfite. The spent solution is regenerated by lime addition. The precipitated solids are partially dewatered and disposed of in a landfill.	Reduces the outlet flue gas SO_2 concentration to ≤50 ppmv.	Nine commercial units in operation and three under construction in the U.S.	Low in capital and operating cost like the limestone system, but the use of a clear scrubbing solution reduces scaling, erosion, and corrosion in the scrubbing loop.	Requires soda ash (Na_2CO_3) makeup in addition to lime for precipitation. Soda ash is an expensive raw material. The sludge contains soluble and leachable sodium salts. Sulfur is nonrecoverable.
Sodium Carbonate[a]	Absorbs SO_2 with a sodium carbonate solution. A bleed stream of the spent solution is partially dewatered and disposed of in a landfill.	Reduces the outlet flue gas SO_2 concentration to 50 ppmv.	Four commercial units in operation worldwide.	Low capital cost. A very simple and reliable process.	Soda ash is an expensive raw material. Produces a sludge which is very difficult to dewater and dispose of. Sulfur is nonrecoverable.
Dowa Aluminum Sulfate[b]	Absorbs SO_2 with an acidic clear solution of basic aluminum sulfate. The spent solution is oxidized to aluminum sulfate. Limestone is added to the solution to regenerate basic aluminum sulfate and produce gypsum which is partially dewatered and disposed of in a landfill.	Reduces the outlet flue gas SO_2 concentration to 50 ppmv.	Not used commercially in the U.S.	Uses the same basic process design as the double alkali process and, therefore, has the same advantages. The process uses a clear scrubbing solution which reduces scaling, erosion, and corrosion in the scrubbing loop.	Requires dewatering and landfill disposal.
Oil Shale[b] (Processed Shale, Nahcolite)	Absorbs SO_2 with a shale slurry. A bleed stream of the slurry is partially dewatered and disposed of in a landfill.	Reduces the outlet flue gas SO_2 concentration to ~50 ppmv.	The process is only conceptual at this time and has not been tested on a pilot scale.	Low capital and operating cost. Also, an abundant supply of processed shale is available at the plant site. Nahcolite is plentiful in the Piceance Basin.	Has not yet been tested, even on a pilot plant scale. Sulfur is nonrecoverable.

(Continued)

TABLE 5.1-7 (cont.)

Control Technology	Operating Principle	Performance*	Development Status	Advantages	Disadvantages
Chiyoda Thorough-bred 121 (CT-121)[c]	The flue gas is first quenched to its saturation temperature and then sparged into a limestone slurry, generating a jet bubbling froth layer. The SO_2 in the flue gas is absorbed by the limestone slurry in the jet bubbling layer. The calcium sulfite formed by this reaction is oxidized to calcium sulfate (gypsum) by the introduction of air into the jet bubbling layer. A bleed stream of the waste slurry can be dewatered and landfilled as a recoverable resource or given away to local cement, fertilizer or wallboard industries.	Reduces the outlet flue gas SO_2 concentration to 50 ppmv.	The process has been tested on a demonstration size scale.	Absorbs SO_2 and oxidizes calcium sulfite to gypsum in one reactor vessel.	Has only been tested on a demonstration size scale. Sulfur is nonrecoverable.
REGENERABLE DRY SCRUBBING PROCESS					
Aqueous Carbonate[a]	Flue gas is contacted with an atomized solution of aqueous sodium carbonate in a spray dryer scrubber. The sodium carbonate absorbs the SO_2, is dried, and then collected in a baghouse or electrostatic precipitator (ESP). The dried product is sent to the reducer vessel where it is reacted with coal in a molten sodium carbonate and sodium sulfide solution to form sodium sulfide. The sodium sulfide is then reacted in another vessel with CO_2 in the off-gas from the reducer vessel to regenerate sodium carbonate and evolve hydrogen sulfide gas. The hydrogen sulfide gas is sent to a Claus unit to produce elemental sulfur.	Reduces the outlet flue gas SO_2 concentration to 75-100 ppmv.	The process steps have been tested individually on a pilot scale. An integrated demonstration size (100 MW) unit is currently under construction in the U.S.	Produces salable elemental sulfur using coal as a fuel instead of higher priced and less available oil and natural gas.	The hot molten carbonate solution used in the regeneration section of the process is very corrosive and will require very expensive, special construction materials.

(Continued)

TABLE 5.1-7 (cont.)

Control Technology	Operating Principle	Performance*	Development Status	Advantages	Disadvantages
NONREGENERABLE DRY SCRUBBING PROCESSES					
Lime[a]	Flue gas is contacted with an atomized lime slurry in a spray dryer scrubber. The lime absorbs the SO_2, is dried, and then collected in a baghouse or electrostatic precipitator (ESP).	Reduces the outlet flue gas SO_2 concentration to 100-150 ppmv.	Two commercial units are in operation in the U.S. Three additional units are currently under construction.	Since the flue gas is not saturated, slightly less makeup water is needed and less stack gas reheat is needed.	This system is usually only economically feasible where low sulfur fuel is burned because of the low reagent utilization rate. Very high removal efficiencies are also not usually possible because of the low reagent utilization rate. Sulfur is nonrecoverable.
Sodium Carbonate[a]	Flue gas is contacted with an atomized solution of aqueous sodium carbonate in a spray dryer scrubber. The sodium carbonate absorbs the SO_2, is dried, and then collected in a baghouse or electrostatic precipitator (ESP).	Reduces the outlet flue gas SO_2 concentration to 75-100 ppmv.	The process has been tested on a demonstration size scale.	Same as for the lime dry scrubbing process.	Same as for the lime dry scrubbing process. Also, soda ash is an expensive raw material. Sulfur is nonrecoverable.
Oil Shale[b] (Processed Shale, Nahcolite)	Flue gas is contacted with an atomized absorbent slurry in a spray dryer scrubber. The alkaline minerals in the shale (primarily calcium and sodium carbonates) absorb the SO_2, are dried, and then collected in a baghouse or electrostatic precipitator (ESP).	Reduces the outlet flue gas SO_2 concentration to ~100-150 ppmv.	The process is only conceptual at this time and has not been tested on a pilot plant scale; however, the Lurgi oil shale retorting process lift pipe and flue gas treating equipment and the TOSCO II preheat unit closely resemble this system.	Same as for the lime dry scrubbing process. Also, an abundant supply of processed shale is available at the plant site. Nahcolite is plentiful in the Piceance Basin.	Same as for the lime dry scrubbing process. Sulfur is nonrecoverable.

* Performance somewhat depends on inlet SO_2 concentrations, fuel quantities and reagent utilization.

Sources: SWEC based on information from:

[a] Kohl and Riesenfeld, 1979.

[b] Stone and Webster Engineering Corp., January 30, 1979.

[c] Electric Power Research Institute, April 1980.

In the regenerable processes, the spent alkali is reduced to a sulfide and then reacted with CO_2 to regenerate the alkali and evolve H_2S gas. The regenerated alkali is recycled, while the H_2S gas may be converted to elemental sulfur in a sulfur recovery unit.

In the nonregenerable processes, the spent material is sent to a disposal area for landfilling. The spent material also may be recycled to increase alkali utilization.

Hydrogen sulfide control. H_2S removal can be divided into two categories:

- Direct conversion
- Indirect conversion.

Direct conversion actually oxidizes H_2S to elemental S. Indirect conversion involves removing acid gases (H_2S and CO_2) from the gas stream and requires downstream direct conversion or further processing to treat the sulfur compounds. Figure 5.1-7 lists the H_2S removal systems available, and Table 5.1-8 presents a brief description of the process technologies.

Direct conversion--As shown in Table 5.1-8, several direct conversion technologies are currently available, including Claus, IFP, Stretford, Beavon, Giammarco-Vetrocoke, Takahax, Ferrox and Haines. The conversion of H_2S to elemental sulfur takes place in the liquid-phase in all the processes, except the Claus and Haines which are dry gas-phase removal processes.

Liquid-phase direct conversion processes are ideal for treatment of gases containing low concentrations of H_2S. In these processes, the acid gas components are absorbed by alkali solutions and then oxidized with dissolved oxygen to elemental sulfur. High circulation rates of the alkali solution are required for high performance and to reduce thiosulfate precipitate formation. High selectivity for H_2S removal can also be achieved by taking advantage of the higher H_2S versus CO_2 absorption rates.

The gas-phase direct conversion (Claus and Haines processes) consists of thermal oxidation of one-third of the H_2S to SO_2, followed by a series of catalytic reactors that react SO_2 with the remaining H_2S to form elemental sulfur. The heat for combustion in the furnace is obtained from the oxidation of H_2S; thus, the H_2S concentration must be high enough to sustain spontaneous combustion. Therefore, the gas-phase conversion requires an acid gas stream with a higher H_2S concentration than the liquid-phase conversion.

Indirect conversion--There are essentially five classes of commercially available, indirect H_2S removal technologies that are used in conjunction with direct conversion technologies; these are, removal of H_2S by:

I. Alkanolamine

II. Alkaline salts

III. Aqueous ammonia

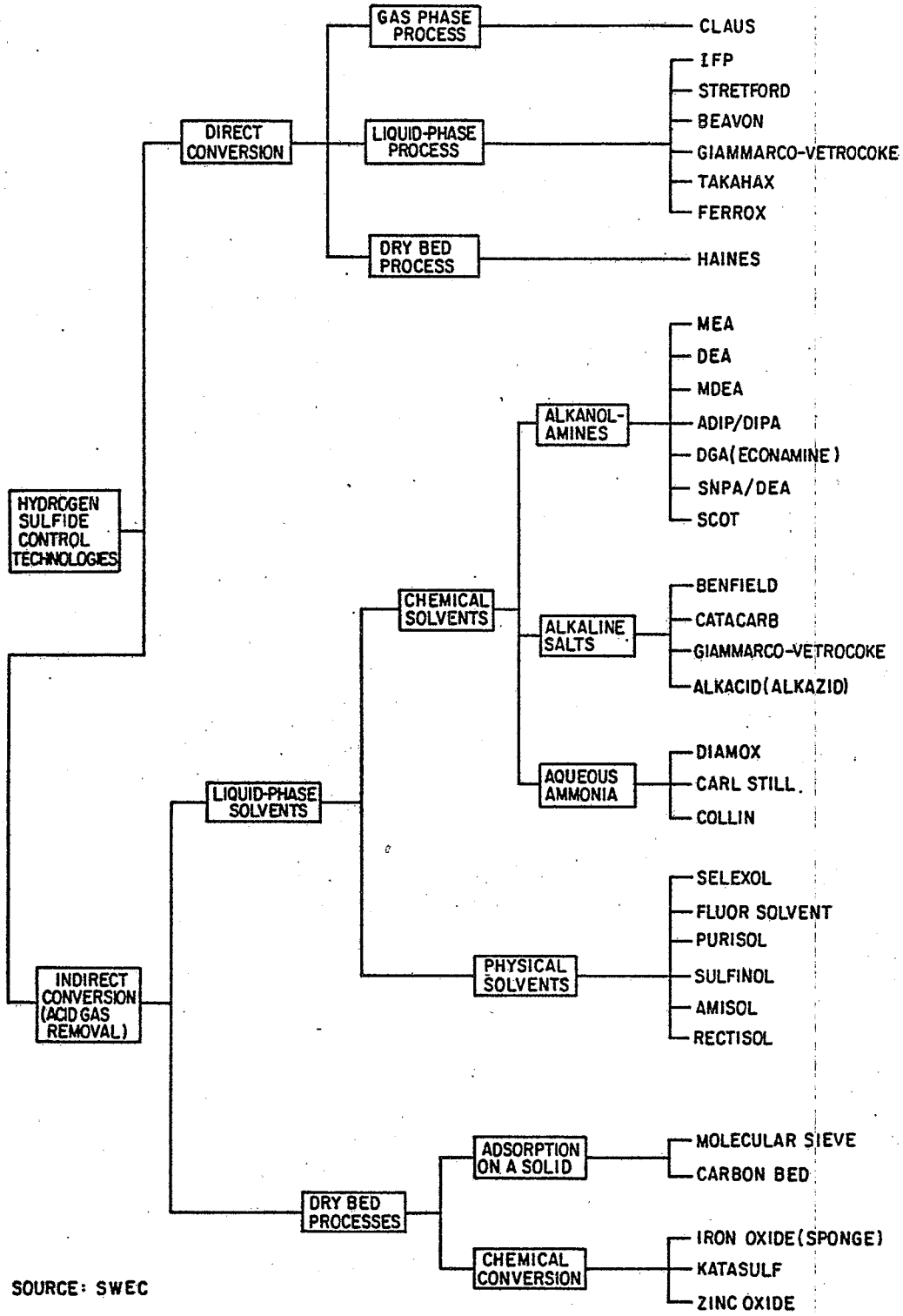

SOURCE: SWEC

FIGURE 5.1-7 HYDROGEN SULFIDE CONTROL TECHNOLOGIES

TABLE 5.1-8. KEY FEATURES OF HYDROGEN SULFIDE CONTROL TECHNOLOGIES

Control Technology	Operating Principle	Performance	Development Status	Advantages	Disadvantages
DIRECT CONVERSION					
Claus[a,b]	Partial oxidation of H_2S to SO_2 and subsequent reaction $2H_2S + SO_2 \rightarrow S + 2H_2O$ in gas-phase.	95% removal of H_2S.	Continuously improved designs available.	Provides extremely good quality elemental sulfur. Partially removes COS.	Side reactions with CO_2 and light hydrocarbons result in stable sulfur compounds emitted from the process. Tail gas may need to be treated.
IFP[b]	Absorption of H_2S and SO_2 (Claus tail gas) in polyalkene glycol, followed by conversion to elemental sulfur using a catalyst (liquid phase Claus reaction).	Reduces sulfur species to <1,500 ppmv.	Available for desulfurization of Claus tail gas.	Presence of high concentration of CO_2 has no adverse effect.	Low removal efficiency.
Stretford[a,b]	H_2S absorption and liquid-phase oxidation $H_2S + \frac{1}{2}O_2 \rightarrow S + H_2O$ in an alkaline solution of a vanadium salt.	Reduces the outlet H_2S concentration to 30 ppmv.	Process commercially available.	Process suitable for desulfurization of a variety of gas streams.	CO_2 absorbed in the process causes significant increases in absorber height requirements. HCN in feed produces a nonregenerable compound with high pollution potential.
Beavon[a,b]	Catalytic hydrogenation and hydrolysis of all sulfur compounds to H_2S, followed by recovery of elemental sulfur using the Stretford process (see above).	Reduces the outlet H_2S concentration to <50 ppmv.	Process commercially available.	Removes all sulfur compounds.	Same as the Stretford process (see above).
Giammarco-Vetrocoke[b]	H_2S absorption and liquid-phase oxidation $H_2S + \frac{1}{2}O_2 \rightarrow S + H_2O$ in a solution of arsenic salt.	99.99% removal of H_2S.	Available for desulfurization of coke-oven and synthesis gases and natural gas.	Capable of producing purified gas containing less than 1 ppmv H_2S even at temperatures up to 300°F.	Hazardous nature of arsenic solution.
Takahax[b]	H_2S absorption and liquid-phase oxidation $H_2S + \frac{1}{2}O_2 \rightarrow S + H_2O$ in an alkaline solution of naphthoquinone compounds.	99.99% removal of H_2S.	More than 100 units operating in Japan.	Capable of producing treated gas containing no detectable H_2S even at high inlet concentrations.	Sulfur precipitation is of very fine grain and amenable to removal via flotation techniques.

(Continued)

TABLE 5.1-8 (cont.)

Control Technology	Operating Principle	Performance	Development Status	Advantages	Disadvantages
Ferrox[b]	H_2S absorption and liquid-phase oxidation $H_2S + \frac{1}{2}O_2 \rightarrow S + H_2O$ in a solution of Na_2CO_3 and $Fe(OH)_3$.	85-99% removal of H_2S.	Few ferrox plants are still in operation.	Marked improvement over dry-box purification due to reduced installation and labor costs.	Sulfur from the ferrox process is not suitable for most uses and chemical replacement costs are high.
Haines[b]	Molecular sieves remove H_2S and water. H_2S is stripped from the bed and reacted with SO_2 to form elemental sulfur.	Reduces the outlet H_2S concentration to <5 ppmv.	Pilot plants in operation in Canada.	Selective adsorption of H_2S in the presence of CO_2. Also, removes mercaptans.	Zeolite adsorption beds may become fouled, impairing regeneration.
INDIRECT CONVERSION					
MEA[b]	H_2S and CO_2 absorbed by a regenerable reaction with Monoethanolamine at ambient temperatures.	Reduces the outlet H_2S concentration to 30 ppmv.	Used almost exclusively for years to remove H_2S and CO_2 from natural and certain synthesis gases.	Simultaneous removal of H_2S and CO_2. Applicable to low concentrations of H_2S and CO_2.	Nonselective for H_2S (e.g., CO_2 also absorbed). Reacts irreversibly with COS and CS_2.
DEA[b]	H_2S and CO_2 absorbed by a regenerable reaction with Diethanolamine at ambient temperature.	99% removal of H_2S.	Preferred choice for treatment of high-pressure natural gas with high concentrations of COS and CS_2.	Predominantly used in refining or manufacturing. Does not absorb COS and CS_2.	Nonselective for H_2S. Reclaiming requires vacuum distillation.
MDEA[a,b]	Selective absorption of H_2S by a regenerable reaction with Methyldiethanolamine.	99% removal of H_2S, 30-65% removal of CO_2.	Commercial plant under construction.	Higher selectivity to H_2S than primary or secondary amines.	Reactions between MDEA and HCN are irreversible.
ADIP/DIPA[a,b]	Selective absorption of H_2S by a regenerable reaction with Diisopropanolamine.	Reduces the outlet H_2S concentration to <100 ppmv.	More than 100 plants constructed world-wide.	Selective for H_2S removal. Substantial amounts of COS removed without detrimental effects. Low regeneration steam requirements.	Can require long residence times for sufficient removal.
DGA[b] (Econamine)	Absorption of H_2S by a regenerable reaction with Diglycolamine.	99% removal of H_2S.	Sour gas processing in operation.	DGA similar to DEA with lower vapor pressure. Lower circulation rates and steam consumption than DEA.	DGA costs are high. High corrosivity. Losses due to reaction with CO_2, COS and CS_2 are high. Reclaiming requires vacuum distillation.

(Continued)

TABLE 5.1-8 (cont.)

Control Technology	Operating Principle	Performance	Development Status	Advantages	Disadvantages
SNPA/DEA[b]	Process utilizes experience gained by SNPA in using DEA.	99% removal of H_2S.	Widely accepted choice for the treatment of high-pressure natural gases with high concentrations of acidic components.	COS and CS_2 are not harmful to the solution. Decomposition products removed by filtering through activated carbon.	High pressure process. Vacuum distillation probable.
SCOT[a,b]	Process uses DIPA to absorb H_2S from the Claus tail gas. Non-H_2S sulfur compounds are converted to H_2S before absorption in DIPA. Regenerated H_2S is oxidized to SO_2 before venting.	Reduces the outlet SO_2 concentration to 300 ppmv.	Several commercial units in operation since 1972.	Removes all sulfur compounds. Specifically suited for the Claus tail gas cleanup.	DIPA removes ~30% CO_2 which is recycled to the Claus process, diluting the feed.
Benfield[a,b] (Hot Potassium Carbonate)	Process uses hot (190°F) potassium carbonate to absorb CO_2 and H_2S. Regenerated by pressure reduction.	90-98% removal of H_2S, 10-40% removal of CO_2.	Process utilized worldwide, with further developments in recent years.	High temperature permits use of highly concentrated solution. Process is very simple. COS, CS_2 and RSH easily removed.	High pressure process.
Catacarb[b]	Similar to Benfield with the use of a proprietary catalytic additive to the hot $KHCO_3$.	Reduces the outlet H_2S concentration to <5 ppmv.	Plants in operation worldwide.	Higher gas purity and lower steam consumption than Benfield. Lower capital cost.	High pressure process.
Giammarco-Vetrocoke	SEE DIRECT CONVERSION PROCESSES				
Alkacid[a,b] (Alkazid)	Process uses various proprietary absorption solutions of alkaline salts and organic acid.	Reduces the outlet H_2S concentration to <5 ppmv.	Although operated abroad since the 1930's, no known commercial installations exist in the U.S.	Solutions are relatively noncorrosive. Solution tailored to requirements for H_2S selectivity and to minimize effect of contaminants.	May require special alloys to handle hot solutions. High CO_2 concentrations result in lower H_2S removal efficiency.
DIAMOX[b]	Selective H_2S removal process using absorption characteristics of ammonia with total (0.7 wt% NH_3) liquid recycle.	Reduces the outlet H_2S concentration to 100 ppmv.	Recently developed and commercialized in Japan.	Acid gas produced is suitable Claus feed or sulfuric acid plant feed. Low pressure process.	Purge stream of ammonia liquor is produced.
Carl Still[a,b]	Selective H_2S removal process using ammonia for absorption (2.0 wt% NH_3) with total liquid recycle.	Reduces the outlet H_2S concentration to ~560 ppmv.	Commercial process now in operation in the U.S.	Low pressure process. Good Claus plant feed.	H_2S selectivity less than DIAMOX. Concentrated NH_3 solutions are highly corrosive. Organic sulfides are not removed.

(Continued)

TABLE 5.1-8 (cont.)

Control Technology	Operating Principle	Performance	Development Status	Advantages	Disadvantages
Collin[b]	Selective H_2S removal process using NH_3 for absorption with total liquid recycle in a six-stage spray tower.	Reduces the outlet H_2S concentration to ~2,000 ppmv.	Commercial process now in use in Europe.	Low pressure process. Good Claus plant feed.	Does not remove organic sulfur compounds.
Selexol[a,b]	Uses an anhydrous organic solvent dimethylether of polyethylene glycol which physically dissolves acid gases and is stripped by reducing pressure without adding heat.	Reduces the outlet H_2S concentration to <1 ppmv.	Few plants in operation for natural gas treatment and for synthesis and coal-derived gas purification.	Nontoxic solvent. Partially removes COS and organic sulfur compounds.	Requires high partial pressure of acid gas.
Fluor Solvent[b]	Uses an anhydrous organic solvent proprylene carbonate which physically dissolves acid gases.	Reduces the outlet H_2S concentration to <5 ppmv.	Plants in operation for CO_2 gases and combination CO_2 and H_2S gases.	Low operation costs.	Solvent intended primarily for removal of CO_2.
Purisol[a,b]	Uses an anhydrous organic solvent N-methyl-2-pyrolidine which physically dissolves acid gases.	Reduces the outlet H_2S concentration to <4 ppmv and CO_2 concentration to 2-3 vol. %.	Four commercial installations in operation as of 1979.	High H_2S selectivity. Partially removes COS and organic sulfur compounds.	Operating temperatures must be near ambient and a certain minimum acid gas partial pressure is required.
Sulfinol[a,b]	Uses a mixture of chemical (DIPA) and physical solvent (sulfolane) and water.	Reduces the outlet H_2S concentration to <1 ppmv and CO_2 to <50 ppmv.	Wide application in the treatment of natural, refinery and synthesis gases.	Removes COS and RSH. Capacity of the sulfinol high at high partial pressure of H_2S.	Optimum operation requires high pressure. Solution absorbs heavy HC's, requiring flash tank separation.
Amisol[b]	Uses a mixture of a chemical (MEA/DEA) and a physical solvent (methanol).	Reduces the outlet H_2S concentration to <0.1 ppmv and CO_2 to <5 ppmv.	Only semi-commercial plants in operation.	Capable of removing all sulfur compounds.	Nonselective for H_2S.
Rectisol[a,b]	Uses physical absorption in methanol at low temperature.	Reduces the outlet H_2S concentration to <0.1 ppmv.	Thirty-six plants are in operation worldwide. Twelve units are under construction.	Heat input low because temperature is maintained by flashing. Removes all undesirable components (COS, CS_2, RSH, HCN) in a single step.	Complex operation. High solvent losses. Best suited for higher pressures. Low temperature process.
Molecular Sieve[a,b]	Use of molecular sieves to adsorb sulfur compounds.	Reduces the outlet H_2S concentration to <4 ppmv.	Not widely used for removing H_2S from gas streams.	Extended useful life (3-5 years) of adsorbent possible with properly designed molecular sieve. Removes mercaptans.	Preferably used on high pressure streams. Regeneration gas disposal.

(Continued)

TABLE 5.1-8 (cont.)

Control Technology	Operating Principle	Performance	Development Status	Advantages	Disadvantages
Carbon Bed[a,b]	Activated carbon catalytically oxidizes H_2S to elemental sulfur at ambient temperatures. Sulfur removed by solvent washing.	Reduces the outlet H_2S concentration to 0.2 ppmv.	Sixty commercial plants in operation in the U.S.	Very pure sulfur is obtained. Complete H_2S removal.	Carbon deactivated rapidly. Purification required to remove tar and ammonia. Complicated sulfur extraction procedures. 1,500 ppmv/ H_2S limit in feed.
Iron Oxide[a,b] (Iron Sponge)	H_2S removed completely by reaction with ferric oxide $2Fe_2O_3 + 6H_2S \rightarrow 2Fe_2S_3 + 6H_2O$. Exposure to air oxidizes Fe_2S_3 to Fe_2O_3 and sulfur.	Reduces the outlet H_2S concentration to 0.3 ppmv.	Very old process, still used on a large scale for the treatment of coal gases.	Low pressure drop process. Complete removal of H_2S.	Suitable for low volume/ low pressure gases. Fouled Fe_2O_3 disposal is required. Tar and HCN contaminated Fe_2O_3.
Katasulf[b]	Air and preheated gas with H_2S catalyzed to form SO_2 which is absorbed in an aqueous ammonium sulfite-bisulfite solution.	Reduces the outlet H_2S concentration to <4 ppmv.	Large commercial units in operation worldwide.	Produces a salable ammonium sulfate.	Carbon-steel corrosion problems exist with some forms of the process.
Zinc Oxide[a]	The gas is passed through a bed of zinc oxide, resulting in the reaction $ZnO + H_2S \rightarrow ZnS + H_2O$.	Reduces the outlet H_2S concentration to 0.2-0.5 ppmv.	One hundred commercial plants in operation worldwide.	Virtually complete removal of H_2S.	ZnO is not regenerable and is expensive.

Sources: SWEC based on information from:

[a] Dravo Corp., February 1976.

[b] Kohl and Riesenfeld, 1979.

IV. Physical solvents

V. Dry bed processes.

The alkanolamine processes (I) remove acidic impurities, i.e., H_2S, CO_2, COS, and CS_2, from gases by an acid-base chemical reaction with the amine. The process involves an absorption-regeneration cycle of a circulating amine. Commonly used amines are monoethanolamine (MEA), methyldiethanolamine (MDEA), diethanolamine (DEA), diisopropanolamine (DIPA) and diglycolamine (DGA). Major equipment systems used in the amine process are a gas-amine contactor (absorber) for absorption of the acid gases and a regenerator (stripper) for releasing the acid gas from solution. A downstream sulfur recovery facility is required to oxidize, or recover, the H_2S.

Alkaline salt processes (II) use an aqueous solution of a buffered potassium salt. The weak alkaline solution absorbs the acid gas components of the feed gas. The process operates at medium to high pressures because the absorption capability is influenced by the acid gas (H_2S and CO_2) partial pressures. The alkaline solution is regenerated by reducing the rich solution pressure to near ambient pressure, followed by steam stripping and sulfur recovery.

The ammonia process (III) uses the same mechanism for H_2S removal as the alkaline salt process (II) except the ammonia is used as the absorption agent. Regeneration and additional sulfur recovery are necessary.

Physical solvents (IV) have low heats of solution and can absorb acid gases in proportion to their partial pressures. These processes require high acid gas partial pressures which are achieved at low gas pressures and high acid gas concentrations, or at high gas pressures and low acid gas concentrations. Physical solvent processes are most economical when the feed gas is at high pressure and bulk removal of the acid components is desired. A high degree of selectivity of H_2S absorption is possible, but additional equipment is required, increasing costs. A downstream sulfur facility is also necessary to recover the H_2S.

Dry bed processes (V) generally employ two techniques to remove H_2S from a gas stream: (1) adsorption onto a dry bed, such as a molecular sieve or activated carbon, followed by desorption of the H_2S from the bed using a hot gas stream; and (2) reacting the H_2S with a dry bed material such as iron oxide to form a solid sulfide compound, which is then oxidized by air to regenerate the dry bed and to form elemental sulfur.

<u>Sulfur Control Technologies Analyzed</u>--

The prime sources of SO_2 emissions from the MIS-Lurgi plant are the Lurgi flue gas discharge system and the process gas combustion boilers. The fuel-based sulfur in the processed shale is converted to SO_2 during the combustion of residual organic matter in the lift pipes, while the source of SO_2 in the boiler flue gas is primarily from the combustion of H_2S in the MIS and Lurgi retort gases.

The SO_2 emission in the Lurgi flue gas is reported at 20 ppmv (dry basis), or 107.5 lb/hr (Occidental Oil Shale, Inc. and Tenneco Shale Oil Co., April 1981). This value is equivalent to 0.003% fuel-based sulfur in the processed shale, which is very low for an indirectly retorted shale such as the Lurgi processed shale. It is entirely possible that a larger amount of SO_2 is produced during processed shale incineration, but this SO_2 may then be irreversibly adsorbed on the calcined material in the processed shale, resulting in low SO_2 emissions. This possibility has been mentioned by Cathedral Bluffs and by Rio Blanco Oil Shale Company, which had also planned to use the Lurgi retorting technology for Tract C-a development (Rio Blanco Oil Shale Co., February 1981). Colony Development Operation has also experienced a similar control of SO_2 by its adsorption on raw shale during the preheating of the shale (Colony Development Operation, 1977). Since the SO_2 concentration in the flue gas is reported to be at such a low level (20 ppmv), SO_2 control technologies were not examined for the Lurgi flue gas. However, the effectiveness of SO_2 adsorption on the processed shale in the lift pipes needs to be documented.

Two SO_2 control technologies were examined for the boiler flue gas. One of the technologies--limestone scrubbing (Case Study A)--deals with removing the SO_2 from the flue gas after the combustion of the process fuels, and this is in agreement with the latest plan presented for Cathedral Bluffs (Occidental Oil Shale, Inc. and Tenneco Shale Oil Co., April 1981). The other technology--Holmes-Stretford (Case Study B)--removes H_2S from the process fuels prior to their combustion. Ashland Oil and Occidental had earlier proposed to use the Stretford technology to treat the MIS retort gas (Ashland Oil, Inc. and Occidental Oil Shale, Inc., October 1977). Furthermore, the Cathedral Bluffs developers conducted a Best Available Control Technology (BACT) assessment of seven commonly available H_2S removal technologies and nine SO_2 removal (FGD) technologies; they found the Stretford and limestone scrubbing processes to be the best available choices in the two categories.

The FGD technologies have an advantage over the H_2S removal technologies when treating some gaseous streams because a control over total fuel-based sulfur is achieved. Since all sulfur compounds, such as H_2S, COS, CS_2 and mercaptans, in the fuels are combusted to SO_2, all are controlled to the same degree. On the other hand, the H_2S removal technologies selectively remove H_2S from the gas, but the removal efficiencies for the other sulfur compounds vary considerably. For example, the Stretford process removes only minor quantities of COS, CS_2, and CH_3SH, and these are not recovered as elemental sulfur but are released in the oxidizer vent gas during the reagent regeneration. As a result, the net removal efficiency for the other sulfur compounds is zero; at an H_2S removal efficiency that is comparable to the SO_2 removal efficiency of the FGD process, the combustion of the Stretford treated gas will result in higher SO_2 emissions.

Tables 5.1-9 and 5.1-10 give the major equipment lists for the FGD and Holmes-Stretford processes, respectively, while Table 5.1-11 provides the cost of sulfur control. Figures 5.1-8 and 5.1-9 present the cost curves for the two processes.

TABLE 5.1-9. MAJOR ITEMS IN THE LIMESTONE FGD PROCESS*

Capital Cost Items	Operating Cost Items
Scrubbers (20) 24' diameter × 24' 100' TT vessels	Limestone 212,000 tons/yr
Reheaters (5) 42,000 ft^2 bare tube area	Makeup Water 9.5×10^8 gal/yr
Sludge Thickeners (2) 160' diameter	Steam 2.18×10^9 lb/yr
Pumps 40 @ 12,000 gpm, ΔP = 100 psi 30 - Steam turbines @ 900 HP 10 - Pump motors @ 900 HP	Electricity 1.73×10^8 kW/yr
Limestone Feed Preparation	Manpower 83 Men/yr
Agitators and Mixers	
Support Steel	
Excavations and Foundations	
Ductwork, Expansion Joints and Dampers	
Duct and Pipe Insulation	
Electrical	
Instrumentation and Controls	
Painting	

* Design basis: 177 LTPSD sulfur removed.

Source: SWEC.

TABLE 5.1-10. MAJOR ITEMS IN THE HOLMES-STRETFORD PROCESS*

Capital Cost Items	Operating Cost Items
Knock-Out Drums (30) 16' diameter × 35'	Holmes-Stretford Mix 405 lb/day
Absorbers (30) 36' diameter × 140'	Soda Ash 15,275 lb/day
Oxidizers (10) 37' diameter × 62'	Process Water 71 gpm
Pump Tanks (5) 37' diameter × 50'	Steam 5,200 lb/hr
Circulation Pumps (3) 13,500 gpm	Cooling Water 350 gpm
Flash Drums (10) 20' diameter × 52'	Electricity 38,300 kW
Slurry Tanks (5) 26' diameter × 50'	Manpower 7 Men/day
Slurry Pumps (5) 350 gpm	
Filter Systems (5) 7,000 lb/hr	
Sulfur Melters (5) 3.5×10^6 Btu/hr	
Sulfur Decanters (5) 6' diameter × 17'	
Sulfur Storage Pits (5) 200-ton capacity	
Evaporators (5) 500 gpm liquor feed	

(Continued)

TABLE 5.1-10 (cont.)

Capital Cost Items	Operating Cost Items
Heaters (3) 1.5×10^6 Btu/hr	
Coolers (3) 1.0×10^6 Btu/hr	
Feed Gas Boosters (30) 90,000 ACFM @ 0 psig	
Flash Gas Boosters (7) 5,000 ACFM	
Plot Area 305,000 ft^2	
Site Preparation and Foundations	
Ductwork and Piping	
Electrical	
Instrumentation and Controls	
Painting	

* Design basis: 177 LTPSD sulfur recovered.

Source: SWEC estimates based on information from Peabody Process Systems, Inc., February 1981.

TABLE 5.1-11. COST OF SULFUR POLLUTION CONTROL

Stream Number	Case Study	Control Description	Control Location	Number of Units	Fixed Capital Cost ($000's)	Total Annual Operating Cost ($000's)	Total Annual Control Cost ($000's)*
67	A	Limestone FGD Scrubber	Boiler Flue Gas	10	224,898	37,287	81,032
31,45	B	Stretford	Gas Recovery and Treatment	30	203,346	26,044	65,550

* See Section 6 for details on computation of the total annual control cost.

Source: DRI estimates based on information provided by SWEC.

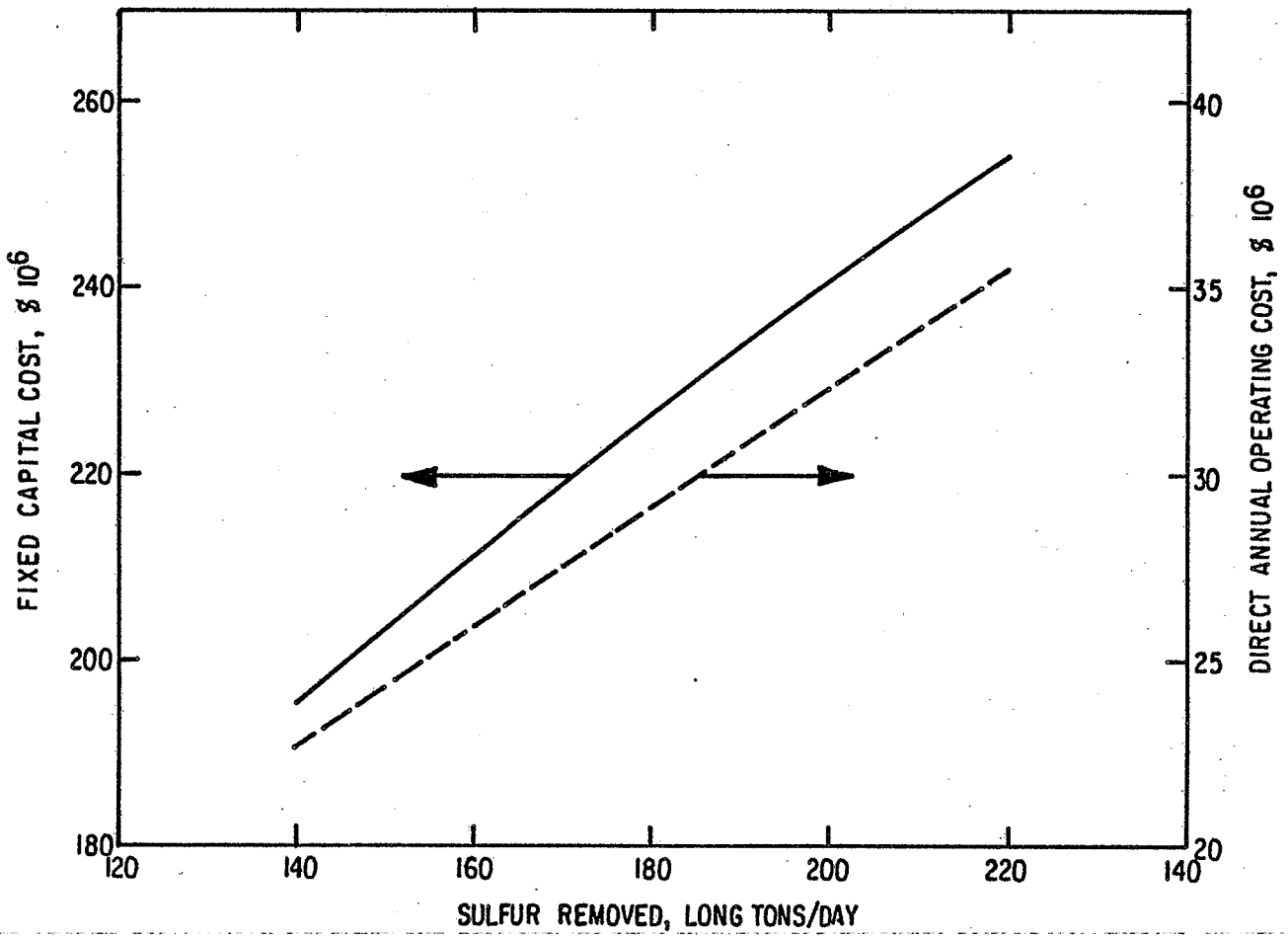

SOURCE: DRI based on information provided by SWEC

FIGURE 5.1-8 COST OF FLUE GAS DESULFURIZATION WITH LIMESTONE SCRUBBERS

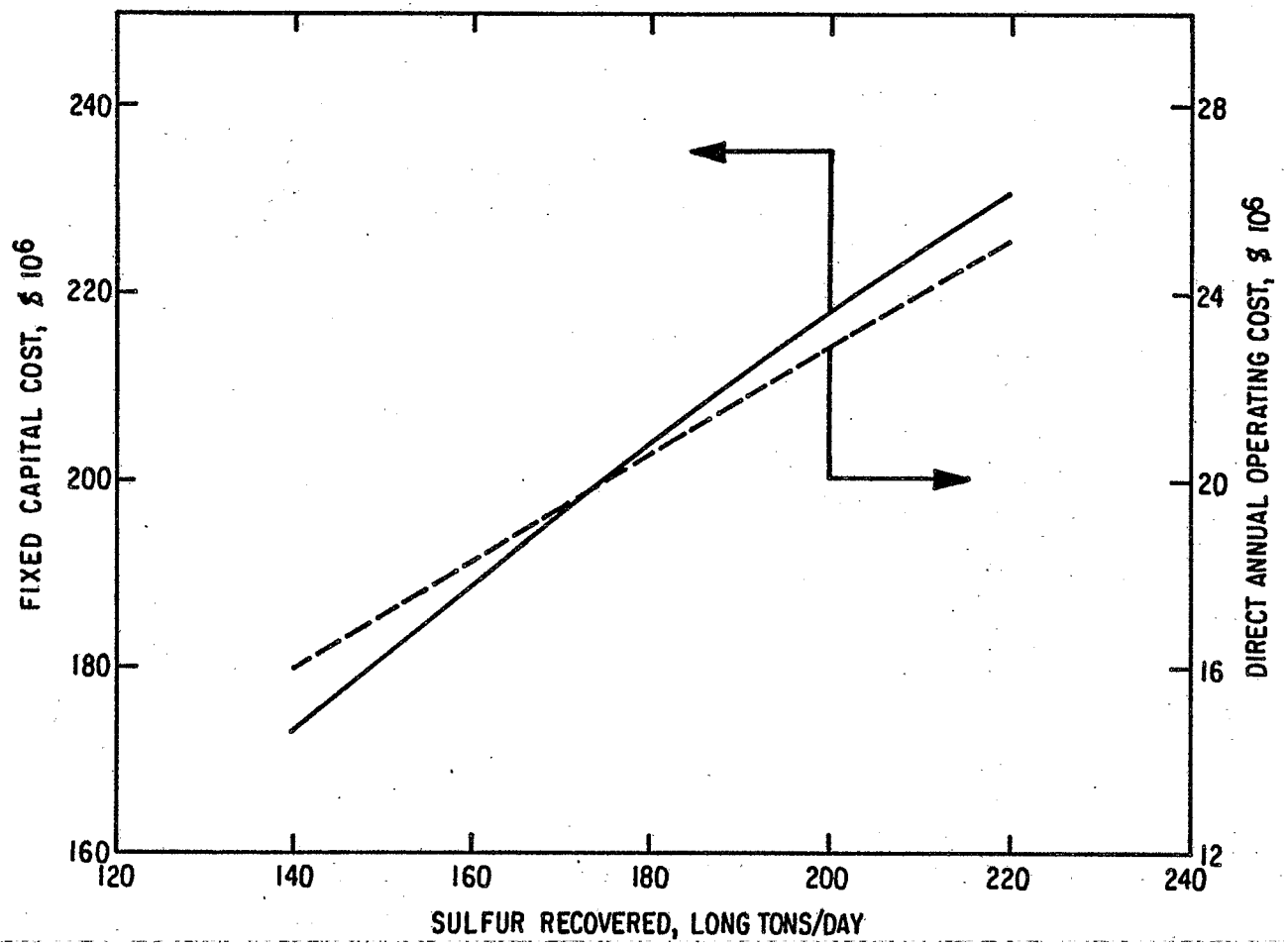

SOURCE: DRI based on information provided by SWEC

FIGURE 5.1-9 COST OF SULFUR RECOVERY WITH STRETFORD PROCESS

Total Sulfur Emissions--

The major sources of sulfur emissions (as SO_2) from the MIS-Lurgi plant are the FGD stack (Case Study A) or the boiler stack (Case Study B) and the Lurgi flue gas discharge system. In addition, very minor quantities of SO_2 are emitted from the mine ventilation shafts and from the diesel-operated vehicles.

The steam boilers consume approximately 2,200 BPSD of an oil produced by the Lurgi process, in addition to the MIS and Lurgi retort gases (Occidental Oil Shale, Inc. and Tenneco Shale Oil Co., April 1981). In Case Study A, the retort gases are not treated before burning; rather, desulfurization of the flue gas is carried out to remove 95% of the SO_2 generated from the above fuel sources. In Case Study B, the retort gases are treated by the Stretford process before they are burned. This technology reduces H_2S to a level of 30 ppmv in the treated gases but does not remove appreciable quantities of other sulfur compounds. Upon burning the fuels, the residual H_2S and other sulfur compounds are converted to SO_2 which is emitted to atmosphere without further control.

Table 5.1-12 gives the estimated SO_2 emissions from the plant. The Cathedral Bluffs data in the table are derived from the PSD permit application and indicate 95% removal of SO_2 by FGD (Occidental Oil Shale, Inc. and Tenneco Shale Oil Co., April 1981). The emissions estimated by DRI are based on information provided by vendors (50 ppmv SO_2 in the flue gas for the FGD case and 30 ppmv H_2S in the treated fuel gases). Since the composition of the Lurgi oil burned in the boilers is not known, its SO_2 contribution is not included in the DRI estimates.

5.1.3 Nitrogen Oxides Control

In oil shale processes, nitrogen enters the system from two primary sources: (1) the fuels derived from the raw shale, and (2) the air required for combustion in the various furnaces, heaters, auxiliary boilers and incinerators. A portion of this nitrogen is converted into other forms such as nitrogen oxides (NOx) and ammonia (NH_3). The NOx produced during fossil fuel combustion are emitted as NO and NO_2 in flue gases. These compounds are formed from the oxidation of nitrogen compounds (e.g., ammonia, cyanides) in the shale-derived fuels and/or from the fixation of atmospheric nitrogen (N_2). A large portion of ammonia resulting from the pyrolysis of the shale is usually removed in the gas condensate, or foul water, when the retort gas is cooled or scrubbed with water. This removal and subsequent recovery of ammonia provide an indirect control over NOx emissions. Since the recovery of ammonia from an aqueous solution also constitutes water pollution control, this aspect of the NOx control is discussed under water management (Section 5.2). The portions of ammonia and fuel-based nitrogen that are not removed in the gas condensate may require removal or control prior to emission to the environment. Federal and Colorado State standards and regulations limit NOx emissions because of their potential role in the formation of photochemical smog and acid precipitation.

TABLE 5.1-12. TOTAL SO_2 EMISSIONS FROM THE PLANT

Stream Number	Emission Source	Control Description	SO_2 Emissions, lb/hr: Cathedral Bluffs Data	DRI Estimation: Case Study A	DRI Estimation: Case Study B
4	Mine Ventilation Shaft	--	16.0	16.0	16.0
15	Lurgi Flue Gas Stack	--	107.5	113.0*	113.0*
68	Boiler Stack	Stretford	--	--	2,855.8*
79	FGD Stack	Limestone Scrubbing	1,830.4	2,084.0*	--
5,119	Diesel Equipment	--	10.0	10.0	10.0
TOTAL			1,963.9	2,223.0	2,994.8

* The quantities marked with an asterisk (*) were estimated by DRI. The SO_2 contribution from burning Lurgi oil in the boilers is not included.

Source: Occidental Oil Shale, Inc. and Tenneco Shale Oil Co., April 1981, except as noted.

Inventory of Control Technologies--

There are three categories of NOx control technologies:

- Reduction of nitrogen in the fuel
- Combustion modifications
- Stack gas removal.

These processes are shown in Figure 5.1-10 and are discussed briefly in Table 5.1-13.

Reduction of nitrogen in the fuel. Burning fuels low in nitrogen is the simplest method of controlling NOx emissions arising from fuel-based nitrogen. Hydrotreatment of fuel oils and water scrubbing of fuel gases are fairly effective in removing the fuel-based nitrogen.

Combustion modifications. The generation of NOx by thermal fixation of atmospheric nitrogen is dependent upon the flame temperature, concentration of nitrogen, time history of individual combustion gas pockets, and the amount of excess air present. To some extent, these variables are controllable, and the production of NOx can be minimized for a particular combustion process.

Combustion control of NOx may be accomplished by several methods. One approach is design and operation of burners with fuel-rich mixture ratios. This technique, called off-stoichiometric combustion, produces low flame temperatures and, hence, potentially low NOx formation. A significant excess of oxygen is avoided in the combustion zone by diverting some portion of the inlet air through remote locations in the burner or through entirely separate secondary combustion air ports.

Another NOx reduction technique, based on combustion modification, takes advantage of the strong temperature dependency of nitric oxide (NO) formation on peak combustion temperatures. Reduced flame temperatures may be obtained by direct reduction of gas temperature or by indirectly increasing heat transfer. Direct techniques include recirculating product flue gases back into the combustion zone where they serve as diluents absorbing heat, thereby reducing maximum flame temperatures achieved. Other direct techniques are reduced combustion air preheat and water/steam injection. The latter is more applicable to gas turbines. Indirect NOx reduction relating to the combustion process usually involves furnace designs with increased burner spacing and heat removal capability. Flame temperature reduction does not reduce NOx formation from fuel nitrogen but does reduce atmospheric N_2 fixation.

Stack gas removal. Flue gas treatment for NOx removal is a relatively new, developing technology. Two broad categories may be defined: wet processes in which NOx is absorbed into an aqueous solution, and dry processes in which NOx is reduced by ammonia.

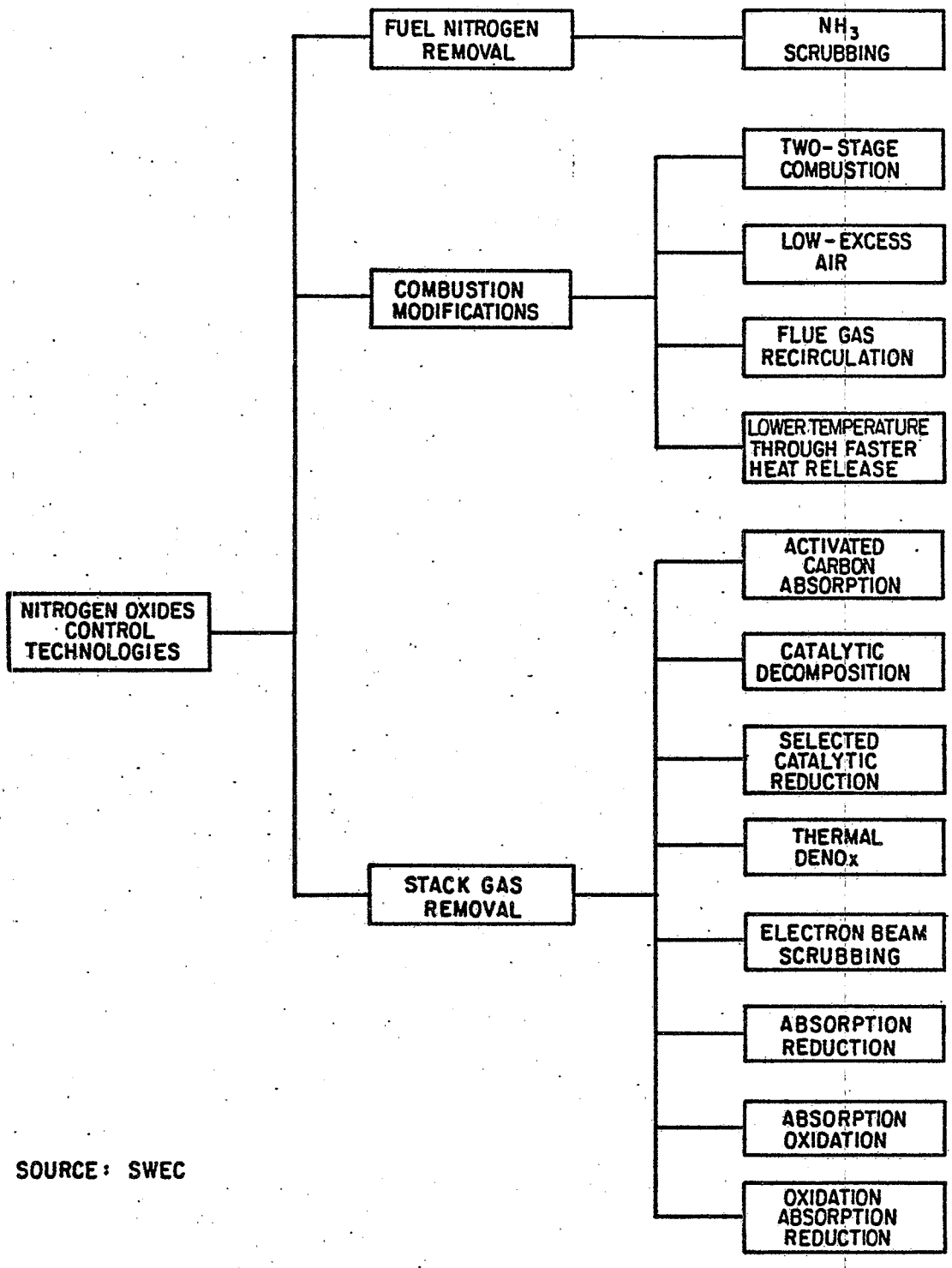

SOURCE: SWEC

FIGURE 5.1-10 NITROGEN OXIDES CONTROL TECHNOLOGIES

TABLE 5.1-13. KEY FEATURES OF NITROGEN OXIDES CONTROL TECHNOLOGIES

Control Technology	Operating Principle	Performance	Development Status	Advantages	Disadvantages
FUEL NITROGEN REMOVAL					
NH_3 Scrubbing	Absorption of NH_3 by counter-current scrubbing with water.	Up to 100% of NH_3 removal possible by changing water rate, composition and temperature.	Commercially proven.	Removes source of NOx before formed. By-product NH_3 is produced.	Does not reduce NOx emissions formed by thermal fixation of nitrogen and oxygen in combustion air.
COMBUSTION MODIFICATIONS					
Two-Stage Combustion (either low-emission burners or engineered combustion box)	Air is introduced in two zones. Zone 1) combustion occurs under reducing conditions; Zone 2) additional air added to complete combustion.	40-60% of thermal NOx reduction. Less reduction for fuel-nitrogen.	Burners and boiler designs commercially available.	Burner system is inexpensive in relation to total cost.	Reducing zone can cause boiler tube damage.
Low-Excess Air	Reduce excess air available to reduce reaction kinetics of N-radical and O_2 reaction.	10-20% NOx reduction.	Commercially proven.	Requires only operational changes.	Boiler is more difficult to operate. Possible increase in CO/HC emissions.
Flue Gas Recirculation (FGR)	Some flue gas recirculated to combustion zone to reduce peak temperature in furnace.	Up to 20% NOx reduction.	Commercially proven.	Useful in controlling outlet steam temperatures.	High capital and operating cost.
Lower Temperature Through Faster Heat Release	A larger boiler is used to reduce temperature in the furnace.	Up to 20% NOx reduction.	Commercially proven.	Results in significant reduction of NOx.	Difficult to implement in existing plants.
STACK GAS REMOVAL OF NOx					
Activated Carbon Adsorption	Adsorption of NOx (and SO_2) on activated carbon.	70-100% NOx, 72-90% SO_2 removal.	Sumitomo Huy Ind -1- plant discontinued operation due to high cost.	Simultaneous removal of SO_2 and NOx.	High consumption of carbon and fuel.
Catalytic Decomposition	No data available.		R.M. Parsons conceptual stage.		
Selective Catalytic Reduction (SCR)	NOx reduced by NH_3 over a catalyst (all processes similar using various proprietary catalysts).	Up to 90% NOx removal.	Four processes in commercial-scale operation, 20 processes available.	Low operating temperatures and low consumption of NH_3.	Particulates and SO_3 can cause catalyst plugging and poisoning. High capital cost.

(Continued)

TABLE 5.1-13 (cont.)

Control Technology	Operating Principle	Performance	Development Status	Advantages	Disadvantages
Thermal DeNOx	NH_3 injected in a 1,300-1,800°F flame zone where $NO + NH_3 \rightarrow N_2 + H_2O$.	Up to 70% NOx removal.	Demonstrated commercially.	By-product recovery not required. Low capital cost.	Requires large amounts of NH_3. Narrow operating range.
Electron Beam Scrubbing	Removal of SO_2 and NOx by reaction with NH_3 in the presence of electrons. Products are $(NH_4)_2SO_4$ + NH_4NO_3.	Up to 85% NOx, 90% SO_2 removal.	Pilot plant stage only.	Simultaneous removal of SO_2 and NOx.	Power consumption is 3% of plant output for beam accelerator. High capital cost. Requires high efficiency ESP.
Absorption Reduction	NOx is converted to NH_3 by the reducing effect of SO_2 to make $(NH_4)_2SO_4$ with a liquid Fe EDTA catalyst in a 20-tray column.	70-85% NOx, 90% SO_2 removal.	Not demonstrated commercially.	No oxidizing agent required.	Requires an expensive column. Consumes large quantities of NH_3 and H_2SO_4.
Absorption Oxidation	NOx and SO_2 are absorbed in a $KOH/KMnO_4$ solution and are oxidized to KNO_3 and K_2SO_4.	No data available.	Not demonstrated commercially.	Simultaneous removal of SO_2 and NOx.	Costly due to consumption of KOH and regeneration of $KMnO_4$.
Oxidation Absorption Reduction	Either O_3 or ClO_2 are used to oxidize NO to NO_2.	Up to 85% NOx, 95% SO_2 removal if SO_2/NOx ratio is 2.5.	Not demonstrated commercially.	Simultaneous removal of SO_2 and NOx.	Chloride in the waste stream causes disposal problems. Nitrate formation can also cause disposal problems. Oxidation material is very expensive.

Source: SWEC based on information from Battelle, Columbus Laboratories, October 1978.

The wet NOx removal processes also serve as a mechanism to reduce sulfur dioxide emissions and, as such, can provide effective environmental control where both pollutants are present. However, due to the low solubility of NOx in aqueous solutions and the low removal efficiencies obtainable, absorption techniques usually prove to be very expensive.

Dry NOx removal systems, in general, display higher nitrogen oxide reduction capabilities and are economically more viable than wet systems. These processes are usually ammonia based and may be selective or nonselective and catalytic or noncatalytic. Depending on the individual process applied, ammonia is injected into the flue gas at some point after complete combustion and prior to a minimum gas temperature of 350°F. In the resulting reaction, NOx combine with ammonia to form molecular nitrogen and water.

Nitrogen Oxides Control Technologies Analyzed--

The boiler flue gas is the primary source of NOx emissions from the MIS-Lurgi plant. A significant amount of the fuel-based nitrogen (NH_3) from the process fuel gases has been removed prior to burning in the boilers; therefore, the potential for NOx formation is already reduced. Another significant source of NOx is the Lurgi flue gas discharge system. The NOx emissions in the Lurgi flue gas originate from the fuel-based nitrogen in the organic residue on the processed shale and from the thermal fixation of the atmospheric nitrogen during processed shale incineration.

The NH_3 appears in both the MIS and Lurgi gases and is removed by water scrubbing before the gases are burned in the boilers. Ammonia in the Lurgi retort gas is removed during product liquor condensation. Since this is an integral processing step in the Lurgi technology, it is not considered a pollution control measure.

On the other hand, the MIS retort gas cooling and recycled scrubbing is specifically carried out to reduce the NH_3 level in the gas. Although some light oils are also recovered during the cooling process, MIS retort gas absorption/cooling is considered an NOx control technology.

Once removed in the Lurgi gas liquor and MIS gas condensate, the actual recovery of NH_3 is achieved with the Phosam-W technology. Since the Phosam-W process is a water treatment technology, it is discussed in Section 5.2.

The low-Btu MIS retort gas, if it can be burned alone, will produce fairly low flame temperatures, reducing the potential for NOx formation. It is likely, however, that the Lurgi retort gas may need to be fired separately and the hot gases from the combustion then used in the MIS gas firing. Since the high-Btu Lurgi gas will produce fairly high flame temperatures, the formation of a substantial amount of NOx is likely. Cathedral Bluffs is proposing to use low-NOx burners and low excesses of air in order to minimize the NOx emissions from the boilers. Since low-NOx burners have not been proven commercially, costs have not been estimated.

Some combustion modifications can be applied to the Lurgi processed shale burners to reduce the NOx emissions from the Lurgi flue gas discharge

system. Since this would involve redesigning the lift pipes (a process modification), such modifications are not included in the analysis.

Table 5.1-14 lists the major equipment and components included in the cost estimate of the absorber/cooler. Table 5.1-15 summarizes the cost of NOx control. Refrigerated storage tanks for NH_3 are also included as the indirect NOx control technology. A cost curve specific to the absorber/cooler examined in this manual is presented in Figure 5.1-11.

Total Nitrogen Oxides Emissions--

The NOx emissions from the MIS-Lurgi plant are presented in Table 5.1-16. These emission estimates have been obtained from the Cathedral Bluffs PSD permit application (Occidental Oil Shale, Inc. and Tenneco Shale Oil Co., April 1981). The NOx contribution (as NO_2) from the fuel-based nitrogen in the MIS and Lurgi retort gases and Phosam overhead vapors is estimated at 3,893 lb/hr for Case Study A and 2,605 lb/hr for Case Study B; therefore, as the table indicates, a majority of NOx are formed by thermal fixation of the atmospheric nitrogen.

5.1.4 Hydrocarbon Control

Hydrocarbon compounds are emitted to the atmosphere as a result of incomplete fuel combustion or as a fugitive emission from small leaks in processing or storage equipment.

The hydrocarbon emissions from noncombustion sources are usually referred to as volatile organic compounds (VOC) or reactive hydrocarbons (RHC) in government regulations restricting their emission. Federal and State regulations limit these hydrocarbon emissions because of their role in the formation of photochemical smog and ozone production.

Inventory of Control Technologies--

As illustrated in Figure 5.1-12 and discussed in Table 5.1-17, hydrocarbon emissions can be controlled by the following categories of control technologies:

- Additional sealing of process equipment
- Vapor recovery
- Complete fuel combustion
- Catalytic converters
- Thermal oxidizers.

Additional sealing of process equipment. Hydrocarbon emission control by additional sealing of process and storage equipment is best accomplished by engineering these features into the plant. This includes double seals on tanks, pumps, and other rotating machinery, closed-loop sampling, caps on open-ended valves, and periodic monitoring of equipment to find hydrocarbon leaks quickly. This will result in a minimum additional plant capital cost

TABLE 5.1-14. MAJOR ITEMS IN MIS RETORT GAS ABSORBER/COOLER*

Capital Cost Items	Operating Cost Items
Scrubber Towers (10) 40' diameter × 77'6" (lower section) 40' diameter × 8' (transition section) 32' diameter × 43' (upper section)	Electricity 5,300 kW Maintenance
Air Coolers, Lower Section (each tower) 2 - Tube bundles @ 64,400 ft^2 2 - Fans with 16' diameter blades 2 - Fan motors @ 30 HP	Manpower 14 men/day
Combinaire Coolers, Lower Section (each tower) 10 - Tube bundles @ 64,400 ft^2 10 - Fans with 16' diameter blades 10 - Fan motors @ 30 HP 3 - Pumps @ 13,200 gpm 3 - Pump motors @ 1,000 HP	
Combinaire Coolers, Transition Section (each tower) 2 - Tube bundles @ 64,400 ft^2 2 - Fans with 16' diameter blades 2 - Fan motors @ 30 HP 3 - Pumps @ 2,200 gpm 3 - Pump motors @ 200 HP	
Combinaire Coolers, Upper Section (each tower) 2 - Tube bundles @ 64,400 ft^2 2 - Fans with 16' diameter blades 2 - Fan motors @ 30 HP 3 - Pumps @ 1,000 gpm 3 - Pump motors @ 200 HP	
Cooling Tower Circulation (each tower) 3 - Pumps @ 2,500 gpm 3 - Pump motors @ 200 HP	
Site Preparation and Foundations	
Ductwork and Dampers	
Electrical	
Piping	
Instrumentation and Controls	
Insulation	

* Design basis: 894,000 ACFM/unit; total of 5 units with 2 scrubbers each.

Source: SWEC.

TABLE 5.1-15. COST OF NITROGEN OXIDES POLLUTION CONTROL

Stream Number	Control Description	Control Location	Fixed Capital Cost ($000's)	Total Annual Operating Cost ($000's)	Total Annual Control Cost ($000's)[a]
38	MIS Absorber/Cooler	Gas Recovery and Treatment	203,391	(63,235)[b]	(21,015)
62	Refrigerated NH_3 Storage	Ammonia Recovery	2,330	74	558
TOTAL			205,721	(63,161)	(20,457)

[a] See Section 6 for details on computation of the total annual control cost.

[b] Values in parentheses ( ) indicate profit after subtracting the total annual capital and operating charges from the average annual by-product credit of $7,880,000 at $110/ton of ammonia.

Source: DRI estimates based on information provided by SWEC.

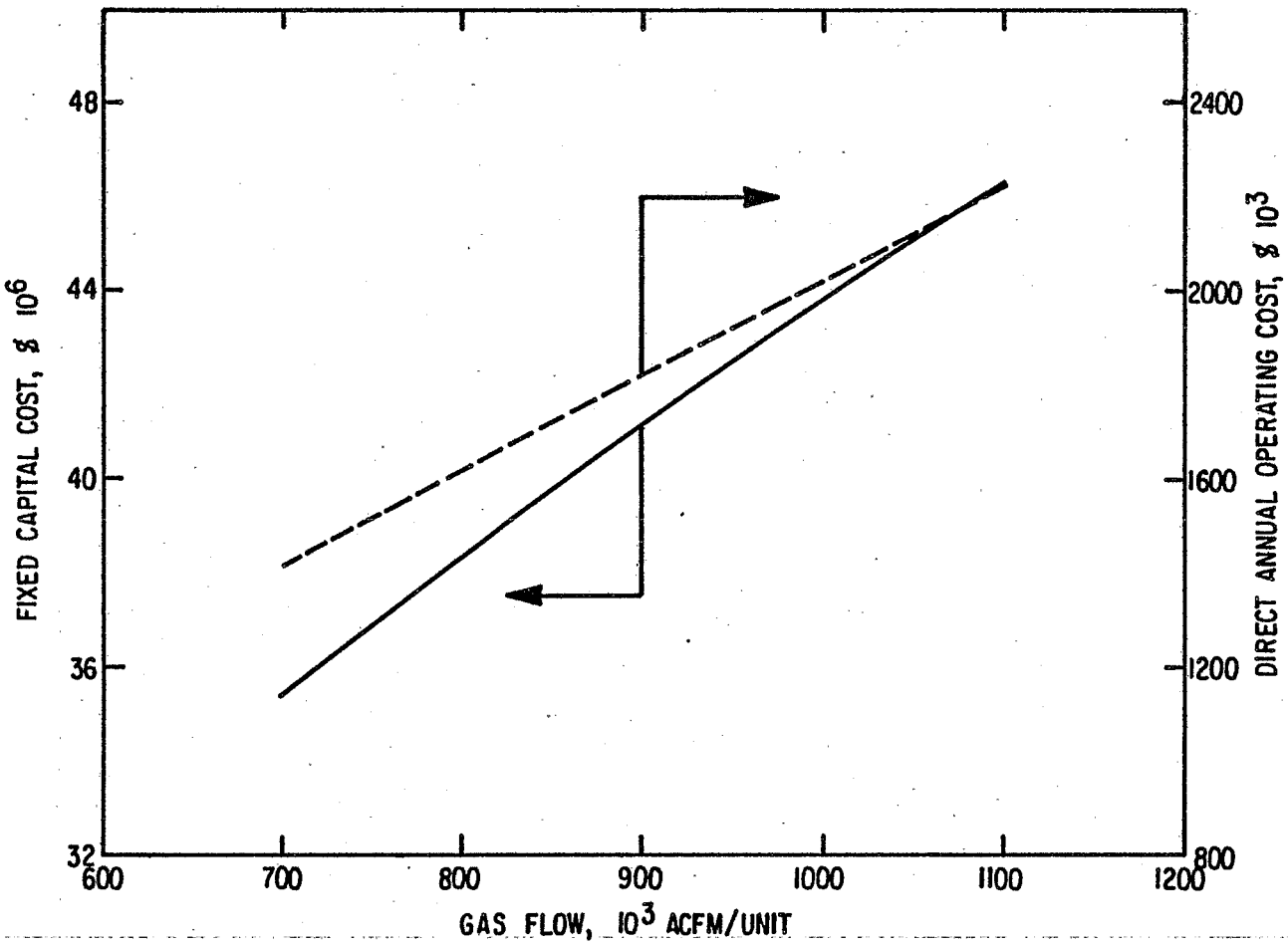

SOURCE: DRI based on information provided by SWEC

FIGURE 5.1-11 COST OF AMMONIA REMOVAL WITH ABSORBER/COOLER

TABLE 5.1-16. TOTAL NOx EMISSIONS FROM THE PLANT

Stream Number	Emission Source	NOx Emissions, lb/hr		
		Cathedral Bluffs Data	DRI Estimation	
			Case Study A	Case Study B
4	Mine Vent	266.7	266.7	266.7
15	Lurgi Flue Gas Discharge System	385.0	406.1*	406.1*
68	Boiler Stack	--	--	5,636.2*
79	FGD Stack	6,924.2	6,924.2	--
5,119	Diesel Equipment	162.0	162.0	162.0
TOTAL		7,737.9	7,759.0	6,471.0

Source: Occidental Oil Shale, Inc. and Tenneco Shale Oil Co., April 1981, except the quantities marked with an asterisk (*) were estimated by DRI.

and will more than pay for itself due to the value of the hydrocarbons which are prevented from being emitted.

Vapor recovery. When hydrocarbon vapor emissions cannot be controlled by additional sealing of equipment, a vapor recovery system can be installed to collect and condense the vapors by refrigeration and return them to the process.

Complete fuel combustion. The most cost-effective way to control hydrocarbon emissions from fuel combustion processes is to operate the process with enough excess air to ensure complete oxidation of all hydrocarbons to CO_2 and H_2O, i.e., complete fuel combustion.

Catalytic converters. When complete fuel combustion does not occur, the hot exhaust gas from the process can be sent through a catalytic converter. In the catalytic converter, the gas is passed over a catalyst where the unburned hydrocarbons are reacted with the excess air in the exhaust gas and are converted to CO_2 and H_2O.

Thermal oxidizers. Hydrocarbon vapor streams or any other waste gas stream containing unburned hydrocarbons can be burned in a thermal oxidizer with excess air and additional fuel, if needed; this completely oxidizes all hydrocarbons to CO_2 and H_2O.

Hydrocarbon Control Technologies Analyzed--

The hydrocarbon emissions in the MIS-Lurgi plant emanate from the leakage in the valves, pumps, etc., as the fugitive emissions from oil product storage, and due to the incomplete combustion of the fuels.

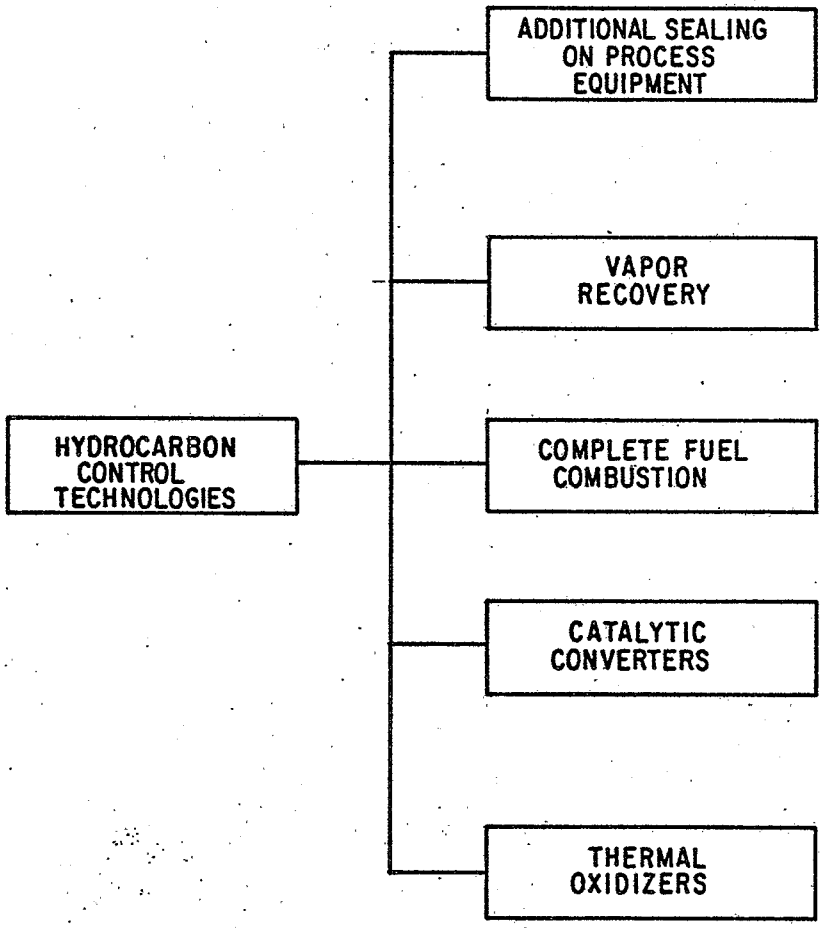

SOURCE: SWEC

FIGURE 5.1-12 HYDROCARBON CONTROL TECHNOLOGIES

TABLE 5.1-17. KEY FEATURES OF HYDROCARBON CONTROL TECHNOLOGIES

Control Technology	Operating Principle	Performance	Development Status	Advantages	Disadvantages
Additional Sealing on Process Equipment	Double seals on pumps and rotating machinery and caps on open-ended valves reduce hydrocarbon losses from the equipment.	About 60%-65% reduction of fugitive hydrocarbon emissions is possible with this level of control.	Commercially proven.	Requires a small capital and operating cost and will probably more than pay for this cost due to the value of the hydrocarbons which are prevented from being emitted.	Should be implemented during new plant construction. Requires more capital investment to retrofit the controls of an existing plant.
Vapor Recovery	Hydrocarbon vapors emitted from process equipment are collected and condensed by refrigeration and then returned to the process.	About 80-90% of the hydrocarbon vapors can usually be condensed and returned to the system.	Commercially proven.	A reliable system which is best applied to potential point source emission streams.	Can be a high energy requirement to operate the refrigeration system.
Complete Fuel Combustion	Combustion process is operated with excess air to ensure complete oxidation of all hydrocarbons to CO_2 and H_2O.	Can convert close to 100% of all hydrocarbons in the fuel to CO_2 and H_2O.	Commercially proven.	Eliminates the need for downstream equipment to complete the conversion of CO to CO_2.	An adequate air:fuel ratio must be maintained.
Catalytic Converters	Hot exhaust gas is passed over a catalyst where the unburned hydrocarbons are reacted with the excess air in the exhaust gas and are converted to CO_2 and H_2O.	Can convert up to 80% of the hydrocarbons in diesel exhaust gas streams to CO_2 and H_2O; for other fuel burning processes, up to 99% conversion is possible.	Commercially proven.	Does not require any fuel and has no moving parts so that routine maintenance is minimal.	The catalyst, which is expensive, must be replaced periodically.
Thermal Oxidizers	Waste gas streams containing unburned hydrocarbons are burned with excess air and additional fuel if needed to completely oxidize all hydrocarbons to CO_2 and H_2O.	Can convert close to 100% of all hydrocarbons in the gas stream to CO_2 and H_2O.	Commercially proven.	Will ensure complete oxidation of hydrocarbons and any other unwanted components in the gas stream.	Can have a high energy requirement when supplemental fuel is used.

Source: SWEC based on information from Research and Education Association, 1980.

Hydrocarbon emissions from diesel-burning equipment are controlled by installation of catalytic conversion systems. The least costly fugitive hydrocarbon emissions control for storage tanks is proper sealing. Alternatively, vapor recovery can be used, but the expense is extremely high for these systems. As a standard industry practice, double-sealed, floating roof storage tanks are provided for volatile product storage. Internal plant leaks are controlled by use of adequate seals and strict maintenance procedures. The furnace and boiler stacks emit partially burned hydrocarbons. Except for using proper combustion practices, no other technologies are provided for controlling hydrocarbons from the fuel combustion sources.

Table 5.1-18 lists the hydrocarbon control practices and equipment considered, and Table 5.1-19 presents the costs for hydrocarbon control for the entire plant.

TABLE 5.1-18. HYDROCARBON CONTROL PRACTICES AND EQUIPMENT

Capital Cost Items	Operating Cost Items
Floating Roof Storage Tanks (3) 200' diameter × 48', 268,000 bbl (each) Welded API 650 code Double seals Carbon steel	Maintenance
Complete Combustion of Fuels	
Dual Mechanical Seals on Pumps and Valves	
Catalytic Converters on all Diesel Equipment	
Monitoring Equipment	

Source: SWEC.

Total Hydrocarbon Emissions--

Table 5.1-20 summarizes the hydrocarbon emission sources and control equipment used for the emissions.

5.1.5 Carbon Monoxide Control

Carbon monoxide (CO) is usually formed by incomplete combustion of fossil fuels. Normally, an excess of oxygen is supplied to a combustion process to ensure that all of the carbon in the fuel is converted to carbon dioxide (CO_2). When a shortage of oxygen occurs in the combustion process, some of the carbon is only partially oxidized to CO. Federal and State

TABLE 5.1-19. COST OF HYDROCARBON POLLUTION CONTROL

Stream Number	Control Description	Control Location	Number of Units	Fixed Capital Cost ($000's)	Total Annual Operating Cost ($000's)	Total Annual Control Cost ($000's)[a]
117	Maintenance	Valves, Pumps, etc.	--	110	(99)	(66)
5,119	Catalytic Converters	Diesel Equipment	--	88	35	87
28,34, 40,47	Floating Roof Storage Tanks	Product Storage	3	450	(212)[b]	(110)
TOTAL				648	(276)	(89)

[a] See Section 6 for details on computation of the total annual control cost.

[b] Values in parentheses ( ) indicate profit after subtracting the total annual capital and operating charges from the annual by-product credit of $244,000 from maintenance and $233,000 from the storage tanks, both at $32/bbl of oil.

Source: DRI estimates based on information provided by SWEC.

TABLE 5.1-20. TOTAL HYDROCARBON EMISSIONS FROM THE PLANT

Stream Number	Emission Source	Control Description	Hydrocarbon Emissions (lb/hr)
79	FGD Stack	--	23.0
117	Valves, Pumps, etc.	Maintenance	65.5
5,119	Diesel Equipment	Catalytic Converters	7.7
28,34, 40,47	Product Storage	Floating Roof Storage Tanks	98.3
TOTAL			194.5

Source: SWEC.

standards and regulations limit CO emissions because of their deleterious effect on the human respiratory system.

The easiest and most cost-effective way to control CO emissions is to use excess oxygen in the combustion processes to ensure complete combustion. When incomplete combustion does occur, catalytic converters or thermal or chemical oxidizers may be used to oxidize the remaining CO to CO_2.

Inventory of Control Technologies--

Figure 5.1-13 shows a list of the applicable carbon monoxide control technologies, and Table 5.1-21 describes in detail the features of these control methods.

Complete fuel combustion controls CO emissions by not allowing them to be formed. This is done by operating with enough excess air to ensure complete oxidation of all carbon to CO_2 instead of only partial oxidation to CO. When CO is formed in a combustion process, a catalytic converter or thermal or chemical oxidizer can be used.

Carbon Monoxide Control Technologies Analyzed--

By far, the largest amount of CO is emitted from the Lurgi flue gas discharge system. The sources of this CO may be the incomplete combustion of the residual organic matter on the processed shale, decomposition of the carbonate minerals, and a steam/coke reaction in the processed shale quencher/moisturizer. To maximize the combustion of the organic residue, an excess of air is used. Decomposition of carbonates is unavoidable because the processed shale recycle stream has to attain a high temperature to provide the heat of retorting. The steam/coke reactions may also be unavoidable.

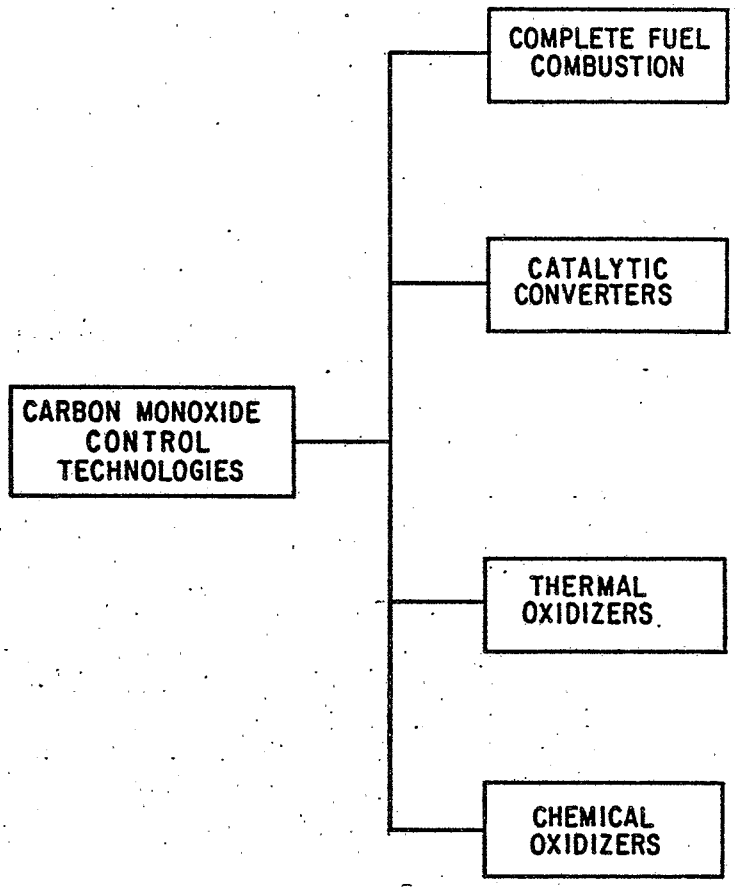

SOURCE: SWEC

FIGURE 5.1-13 CARBON MONOXIDE CONTROL TECHNOLOGIES

TABLE 5.1-21. KEY FEATURES OF CARBON MONOXIDE CONTROL TECHNOLOGIES

Control Technology	Operating Principle	Performance	Development Status	Advantages	Disadvantages
Complete Fuel Combustion	Combustion process is operated with excess air to ensure complete oxidation of all carbon to CO_2, instead of only partial oxidation to CO.	Can convert close to 100% of all carbon in the fuel to CO_2.	Commercially proven.	Eliminates the need for downstream equipment to complete the conversion of CO to CO_2.	An adequate air:fuel ratio must be maintained.
Catalytic Converters	Hot exhaust gas is passed over a catalyst where the CO in the gas is reacted with the excess air in the exhaust gas and is converted to CO_2.	Can convert up to 90% of all CO in diesel exhaust gas to CO_2; for other fuel burning processes, up to 99% conversion is possible.	Commercially proven.	Does not require any fuel and has no moving parts so that routine maintenance is minimal.	The catalyst, which is expensive, must be replaced periodically.
Thermal Oxidizers	Waste gas streams containing CO are burned with excess air and additional fuel if needed to completely oxidize all CO to CO_2.	Can convert up to 100% of all CO in the gas stream to CO_2.	Commercially proven.	Will ensure complete oxidation of CO to CO_2 and complete oxidation of any other unwanted components in the gas stream.	Can have a high energy requirement when supplemental fuel is used.
Chemical Oxidizers	Gas streams containing CO are scrubbed with a solution containing a chemical oxidizing agent which oxidizes the CO to CO_2.	Can convert up to 99% of all CO in the gas stream to CO_2.	Commercially proven.	Oxidizes the CO to CO_2 without using fuel to heat up the entire gas stream.	Requires the use of expensive chemicals.

Source: SWEC based on information from Research and Education Association, 1980.

The CO content of the flue gas is reported at 1,000 ppmv (dry basis). This may be reduced further by the post-combustion of the flue gas; however, due to the large volume and low heating value of the flue gas, it would be impractical. Cathedral Bluffs has estimated that some 12,700 BPSD of oil (~76 × 10^9 Btu/day) would be required to burn the CO to CO_2 (Occidental Oil Shale, Inc. and Tenneco Shale Oil Co., April 1981). Additional pollutants may also be generated from the combustion of the oil. These factors negate the need to reduce the CO level in the flue gas.

Diesel-powered equipment is another source of the CO emissions. The diesel engines are equipped with catalytic converters to control the CO. Since the converters also control hydrocarbons, they have been included under hydrocarbon emission control.

Mine exhaust vents also emit CO generated from the underground diesel equipment. The machinery is equipped with catalytic converters, so additional control is not applied to the vent emission. Cathedral Bluffs has estimated the vent flow rate to be about 6.8 × 10^6 SCFM and the CO concentration to be 16 ppmv (Occidental Oil Shale, Inc. and Tenneco Shale Oil Co., April 1981). Due to the large volume of the vent gas and low concentration of CO, additional CO control may not be practical.

Total Carbon Monoxide Emissions--

Table 5.1-22 summarizes the carbon monoxide emission sources and control equipment used for the emissions.

TABLE 5.1-22. TOTAL CO EMISSIONS FROM THE PLANT

Stream Number	Emission Source	Control Description	CO Emissions (lb/hr)
4	Mine Vent	--	476.7
15	Lurgi Flue Gas Discharge System	--	2,351.7
5,119	Diesel Equipment	Catalytic Converters	28.0
TOTAL			2,856.4

Source: Occidental Oil Shale, Inc. and Tenneco Shale Oil Co., April 1981.

5.1.6 Control of Other Criteria Air Pollutants

In addition to the primary air pollutants discussed so far, there may be other criteria pollutants emitted from the Cathedral Bluffs facility. Cathedral Bluffs has estimated the maximum emission rates for these

pollutants and most are below the de minimis rates. Table 5.1-23 lists these rates along with the de minimis values. Some criteria pollutants, such as asbestos, beryllium and vinyl chloride, have neither been found in the core samples taken from Tract C-b nor are they formed during oil shale processing. Nonvolatile pollutants are emitted as the constituents of the raw and processed shale particulates, and the control of these particulates also provides the control of such pollutants. The mobilization of volatile pollutants such as mercury is temperature dependent. Since the waste streams released from the plant will be below the boiling point of mercury, release of mercury vapors is not anticipated by Cathedral Bluffs. Any released mercury will be as a nonvolatile constituent of the particulates.

TABLE 5.1-23. ESTIMATED EMISSIONS OF OTHER CRITERIA POLLUTANTS

Pollutant	Emissions, TPY	
	De Minimis	Cathedral Bluffs
Ozone*	40	<40
Lead	0.6	0.15
Asbestos	0.007	0
Beryllium	0.004	0
Mercury	0.1	0.003
Vinyl Chloride	1.0	0
Fluorides	3	7.8
Sulfuric Acid Mist	7	0
Hydrogen Sulfide	10	0
Total Reduced Sulfur	10	0
Reduced Sulfur Compounds	10	0

* Ozone is measured as volatile organic compounds (VOC).

Source: Occidental Oil Shale, Inc. and Tenneco Shale Oil Co., April 1981.

5.1.7 Control of Noncriteria Air Pollutants

Meaningful test data are not available to determine whether emissions of noncriteria air pollutants are a concern. Consequently, no information on

control technologies for such pollutants was generated for this manual. Mention of species such as POMs (U.S. EPA, 1980) and trace elements such as arsenic (Fox, Mason and Duvall, 1979; Girvin, Hadeishi and Fox, June 1980) are noted.

5.2 WATER MANAGEMENT AND POLLUTION CONTROL

As in other industries and oil shale operations, the MIS-Lurgi plant--from mining activities to final product and waste disposition--will produce water effluents which will require proper disposal. These effluents may contain the following pollutants:

- Suspended Matter, Oil and Grease
- Dissolved Gases and Volatiles
- Dissolved Inorganics
- Dissolved Organics.

This section describes the current, commercially available alternate systems for controlling the above pollutants. The following subsections provide inventories of control technologies for each of the pollutant classes, a discussion of advantages and disadvantages, and important points to consider in selecting a particular technology. The performance, design, and cost data for the leading technologies are also presented.

5.2.1 Suspended Matter, Oil and Grease

Undissolved matter found in wastewater effluents includes solid particles as well as oils and greases. The solids are usually the raw and processed shale particles that are washed into the retort water and those that are entrained in the retort vapors and subsequently removed in the gas condensates. The retort water and gas condensate also contain trapped oil and oil-in-water emulsions. Service and storm runoffs contain suspended matter, as well as oils and greases. Also, the source water contains suspended soil particles and debris.

In general, the control of suspended matter at oil shale plants will be accomplished using conventional technology. For example, clarification in gravity settlers (with addition of flocculants) and multimedia filtration will, in most cases, provide adequate control. Associated energy consumption and costs are generally low.

The control of undissolved oils and greases in oil shale wastewaters has not been studied in detail. API-type gravity settlers have the potential to provide adequate control for most of the waste streams generated. It is possible, however, that some wastewaters will contain oil-in-water emulsions; if so, additional control steps may be required. Heating the water or adding chemicals may be sufficient to break the emulsion; otherwise, filter coalescence (or possibly ultrafiltration) may be required.

The degree to which emulsified oil needs removal is dependent on downstream processing and reuse. In cooling towers, the oil may foul heat exchange surfaces and thus require prior removal. Similarly, fouling, and possibly foaming, may occur when stripping the retort water or gas condensate. The extent to which such problems will arise is not known.

The energy consumption and cost of oil separation by gravity means are generally low. Thermal or chemical treatment, if required, would cause some increase in costs. Filter coalescence and, in particular, ultrafiltration generally are more costly and would be considered only if other procedures prove inadequate.

Inventory of Control Technologies--

Figure 5.2-1 shows different types of technologies that apply to control of suspended matter and oils and greases. Key features of these technologies are provided in Table 5.2-1.

API-type separators. For gravity separation of oil in large holding tanks, separators should be designed within the following limits: (a) horizontal velocity of less than 3 fpm, (b) depth between 3-8 ft, and (c) depth-to-width ratio of approximately 0.4. Oil is skimmed from the surface and collected for reuse or disposal. Gravity separation is not effective for emulsified oils that might be present in some retort waters (American Petroleum Institute, 1969).

Sedimentation. This is a gravity process in which the solid phase settles and is withdrawn as a slurry. Clarification may be carried out in large holding ponds, plate (lamella) settlers or hydrocyclones. Chemicals (flocculants and coagulants) may be added to precipitate salts (softening) or to aid settling of suspended solids (Humenick, 1977).

Flotation. This is a gravity process in which the solid phase rises to the surface and is skimmed off as a slurry. Air bubbles may be introduced into the flotation vessels to assist separation (Humenick, 1977).

Centrifugation. This is a modified gravity method to afford separation or settling of fine, suspended matter and oils. The wastewater is subjected to a radial force greater than the gravity field by rapidly rotating it. Suspended matter denser than water moves radially away from the center of rotation, while the lighter matter moves toward the center. Concentrated matter can be removed periodically or in a continuous manner. For continuous operations, the sludge should be fluid to facilitate its removal. The technology may not be applicable to highly viscous fluids.

Coagulation - flocculation. Fine particles suspended in a fluid are subjected to size enlargement by addition of chemicals (coagulants and flocculants), then allowed to settle by gravity or under applied force. Gentle agitation alone sometimes may afford the flocculation of the particles. The technology may also be applicable to liquid dispersions and liquid particulates.

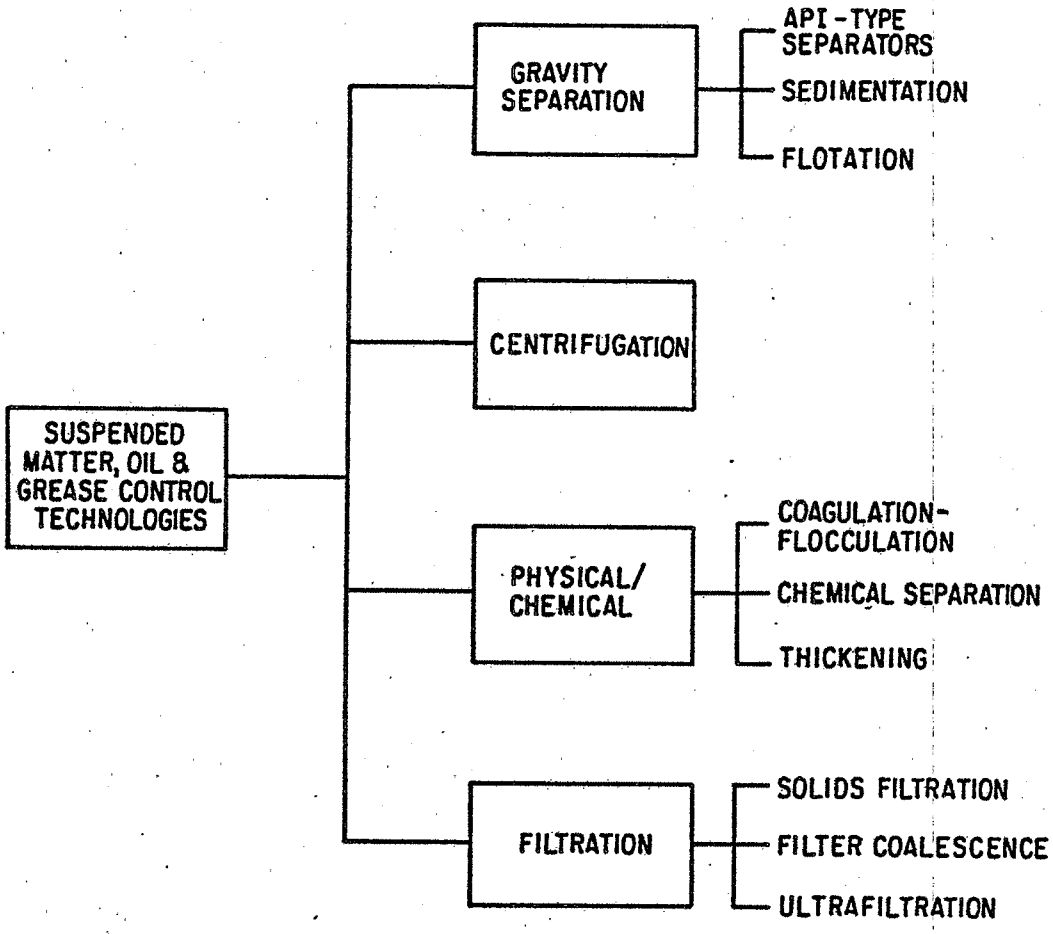

SOURCE: WPA

FIGURE 5.2-1 SUSPENDED MATTER, OIL AND GREASE CONTROL TECHNOLOGIES

TABLE 5.2-1. KEY FEATURES OF CONTROL TECHNOLOGIES FOR SUSPENDED MATTER, OILS AND GREASES

Control Technology	Operating Principle	Components Removed	Removal Efficiency	Feed Requirements/ Restrictions	By-products and Wastes	Comments
Gravity Separation (API-type Separators, Sedimentation, Flotation)	Provision of adequate residence time in a stagnant vessel to allow suspended matter to separate into lighter and heavier than water components. Extra surfaces may be included to save space (lamella settler), or rising air bubbles may be used to assist separation (dissolved air flotation).	Suspended solids, tars, oils, immiscible liquids.	90+% removal of TSS typical for sedimentation, 50% for flotation.	Minimum feed stream turbulence.	Oils, sludges, solids.	Not useful for emulsions or very fine particles.
Centrifugation	A greater than gravity force field is applied by rapid rotation to accelerate the separation.	As above.	As above.		As above.	More expensive than gravity separation. Used for predrying sludges from gravity separation devices or for separation of fine particles.
Physical/Chemical (Coagulation-Flocculation, Chemical Separation, Thickening)	Use of agents to promote the coalescence of fine suspended solids, tars and oils. Generally used in conjunction with a gravity separation process.	Promotes removal of finely dispersed particles.	90+% removal of fine solids is achievable with proper design.	A wide range of commercial flocculants are available.	Same as gravity separation.	Widely used in makeup water treatment systems to remove fine solids.
Filtration (Solids Filtration, Filter Coalescence, Ultrafiltration)	Involves passing wastewater through a suitable filter medium. Filter material is discarded or cleaned by backflushing.	Depends on medium. Both coarse and fine structure materials are used industrially.	90-99% is typical.	Filter media (sand,clay, fabric or polymeric membrane).	Filter backwash, spent filter media.	Filter coalescence or ultrafiltration are useful for oil emulsions.

Source: WPA.

Chemical separation. Addition of chemicals to break emulsion may be used in conjunction with filtration and is normally followed by gravity separation. The type and dosage of chemicals required is determined by trial (American Petroleum Institute, 1969). Chemicals may also be added to precipitate salts or to increase crystal size.

Thickening. Slurries previously obtained from gravity, centrifugation, and filtration methods can be further concentrated, or thickened, by addition of chemical agents or binders. The thickened slurry may then be subjected to the same methods for final disposition (Adams and Eckenfelder, 1974; Humenick, 1977).

Solids filtration. The water stream is passed through a filter medium which holds back the solid phase. Filters may be of the fabric type, as in plate and frame, rotating drum (vacuum) and cartridge units, or granular, as in sand filters. Filtration is generally more expensive than sedimentation but can remove smaller particles (Humenick, 1977).

Filter coalescence. Gravity separation of oil from water is standard industrial and refinery practice; however, the API-type separators are inadequate for very small oil particles. One very important method for removal of small oil droplets is coalescence (Water Purification Associates, December 1975).

When a dispersion of micron-sized droplets of one liquid (oil) in another (water) flows through an appropriate porous solid, coalescence of the dispersed phase is induced and separation of the liquids results. The dispersed phase can be allowed to accumulate without leaving the porous medium, with periodic regeneration to remove accumulated oil.

Filter media are usually either the packed fibrous type (e.g., fiber glass, steel wool) or unconsolidated granular materials (e.g., sand, gravel, crushed coal). Because of their large specific surface and high voids, fibrous media are usually more efficient in removing droplets for a given bed depth than are granular media. However, fibrous media are more susceptible to blockage by suspended solids and are more difficult to regenerate, in addition to being more costly than most granular media.

Advantages of filter-coalescers include high separation efficiency for dilute suspensions of very small droplets, potentially small space requirements, the possibility of continuous operation, and the potential for the recovery of the dispersed phase. Disadvantages of this process are that suspended solids can accumulate to require frequent medium regeneration or replacement, and pumping costs can be substantial. As far as is known, the system has not been evaluated on retort waters, and extensive pilot plant testing would be required to determine its feasibility on these waters.

Ultrafiltration. Passage through a submicron-sized membrane filter separates emulsified oil as well as suspended matter and large organic molecules (MWt $\geq$ 1,000). The oil droplets are collected in the concentrate and removed by gravity separation. This process is significantly more costly than normal filtration (Water Purification Associates, December 1975).

Control Technologies Analyzed--

The streams that require removal of suspended matter, oils and greases are:

- Mine Water (stream 12)
- Retort Water (stream 41)
- Lurgi and MIS Gas Condensates (streams 29, 48)
- Runoffs and Leachates (streams 13, 118, 122)
- Blowdowns and Concentrates (streams 42, 78, 80, 90, 91, 109).

Mine water is obtained from dewatering of the deep aquifers under Tract C-b. While the water does not contain any oils and greases, it does contain suspended matter. Sedimentation by gravity settling and clarification with addition of alum are the approaches proposed to reduce the suspended matter in the mine water. Table 5.2-2 presents the design features and cost data for clarification, and Figure 5.2-2 shows a cost curve for the clarifier. This activity could be considered as part of the process rather than pollution control.

In the Lurgi retorting process, the gas liquor is condensed along with the light oils in the third condensation tower. In the MIS process, gas condensate is obtained by cooling and scrubbing the MIS retort gas, and some light oils are also condensed. Furthermore, during the early burn stage of the MIS retort, some of the retort water is condensed in the lower, cooler parts of the retorts and collected along with the shale oil in an underground sump. These process water streams are treated in API-type oil/water separators (with channel covers) for the removal of oils and greases, followed by multimedia gravity filtration to remove any suspended solids. As stated earlier, the oil/water separators are not fully established as useful devices for shale oils, but difficulty in separating out the light oils is not anticipated. Table 5.2-3 presents the design and cost information for the API separators, and Table 5.2-4 gives the design basis and cost for multimedia filtration. A cost curve for each technology is presented in Figures 5.2-3 and 5.2-4, respectively.

Service and fire water runoff, storm runoff, and leachate from shale piles may contain oily materials. Again, an API-type oil/water separator was examined as the control. This will also allow separation of suspended matter along with the water. The cost and design data for this separator are given in Table 5.2-5, while a cost curve is already included in Figure 5.2-3.

The blowdowns, sludges, and concentrates from various processing units will also contain suspended matter. These streams are collected in an equalization pond for possible use in processed shale moisturizing. Since gravity settlement affords separation of the suspended matter, the equalization pond also might be viewed as a pollution control. Its design and cost are presented in Table 5.2-6, and a cost curve is given in Figure 5.2-5.

TABLE 5.2-2. DESIGN AND COST OF MINE WATER CLARIFICATION[a]

Item	Unit	Case Studies A	Case Studies B
Mine Water Flow Rate	gpm	6,142	4,276
Flow Rate/Clarifier	gpm	1,540	1,070
Number of Clarifiers	--	4	4
Retention Time	hrs	2	2
Diameter	ft	50	43
Alum Rate (~30 ppm)	ton/yr	364	253
Fixed Capital Cost	$\$10^3$	806	655
Direct Annual Operating Cost	$\$10^3$		
Maintenance @ 4%[b]		26	21
Alum @ 12¢/lb		88	61
TOTAL		114	82
Total Annual Control Cost[c]	$\$10^3$	340	265

[a] This technology could be considered as part of the process rather than pollution control.

[b] Maintenance is based on the fixed capital cost less contingency.

[c] See Section 6 for details on computation of the total annual control cost.

Source: WPA estimates.

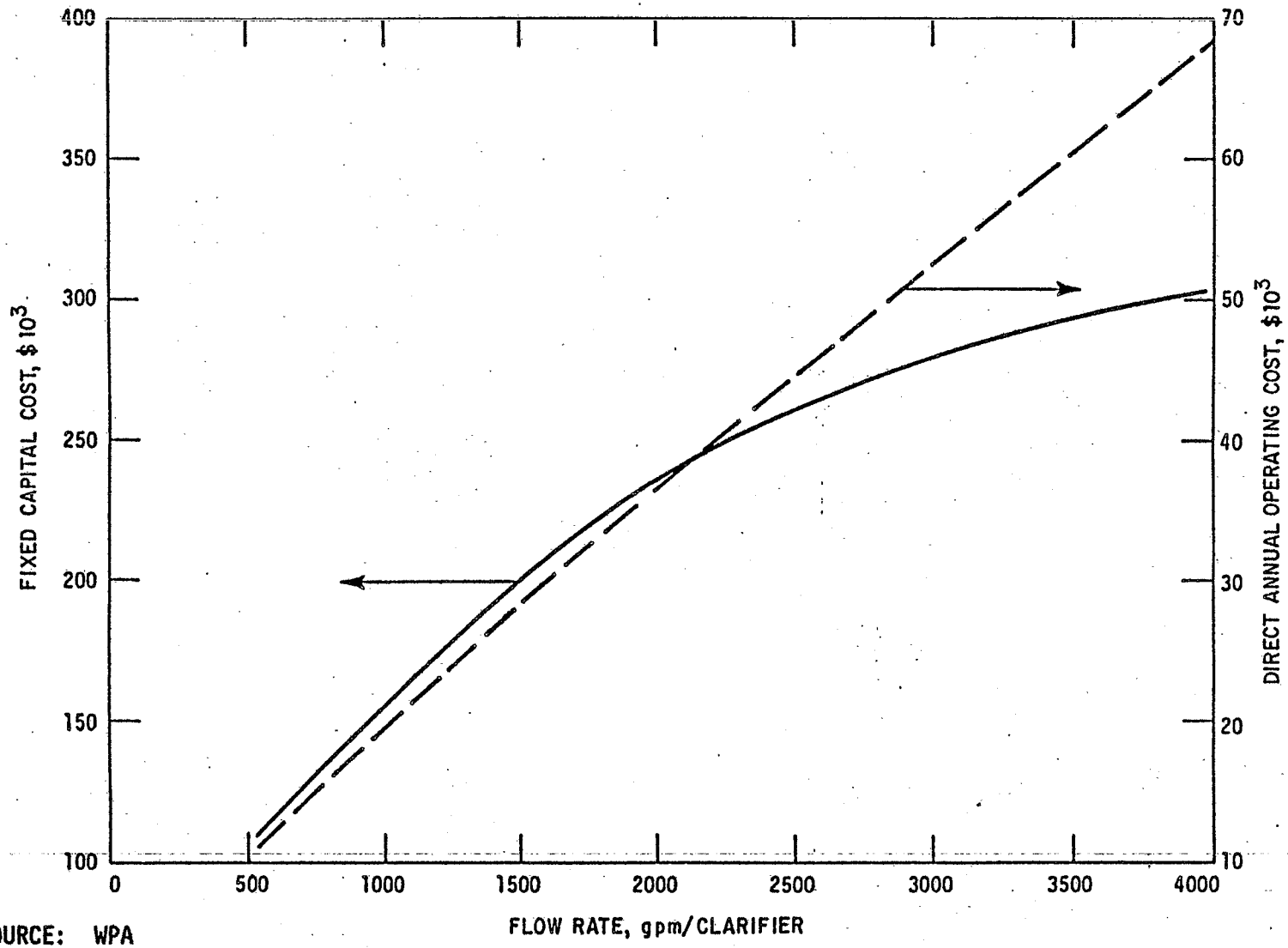

SOURCE: WPA

FIGURE 5.2-2 COST OF MINE WATER CLARIFICATION

TABLE 5.2-3. DESIGN AND COST OF API OIL/WATER SEPARATOR FOR PROCESS WATERS

Item	Unit	Quantity[a] Retort Water	Gas Condensate
Process Water Flow Rate	gpm	4,520	6,721
	10^3 lb/hr	2,303	3,434
Flow Rate/Channel[b]	gpm	2,810	
No. of Channels (1 standby each)	--	3	3
Channel Cross Sectional Area	ft^2	101	115
Channel Depth	ft	7	7
Channel Length (channel is covered)	ft	164	164
Fixed Capital Cost[b]	$\$10^3$	2,484	
Direct Annual Operating Cost[b]	$\$10^3$		
Maintenance @ 3%[c]		61	
Total Annual Control Cost[d]	$\$10^3$	739	

[a] The retort water rate is maximum. The gas condensate rate includes the maximum rate MIS gas condensate, recycle from the Phosam-W unit and Lurgi gas liquor.

[b] The flow rate is based on four channels in use at any one time. The fixed capital cost and direct annual operating cost are based on six channels.

[c] Maintenance is based on the fixed capital cost less contingency.

[d] See Section 6 for details on computation of the total annual control cost.

Source: WPA estimates based on information from American Petroleum Institute, 1969.

TABLE 5.2-4. DESIGN AND COST OF MULTIMEDIA GRAVITY FILTRATION UNIT

Item	Unit	Quantity		
		Retort Water	Gas	Condensate
Water Flow Rate	gpm	4,520		6,721
Flow Rate/Unit[a]	gpm		610	
Total Number of Filters	--	10		14
Number of Standby Filters	--	2		3
Filter Diameter	ft	23		23
Fixed Capital Cost[a]	$\$10^3$		6,465	
Direct Annual Operating Cost[a]	$\$10^3$			
Maintenance @ 4%[b]			210	
Labor, 12 hr/day @ $30/hr			118	
TOTAL			328	
Total Annual Control Cost[c]	$\$10^3$/yr		2,102	

[a] The flow rate is based on 19 units in use at any one time. The fixed capital cost and direct annual operating cost are based on 24 units.

[b] Maintenance is based on the fixed capital cost less contingency.

[c] See Section 6 for details on computation of the total annual control cost.

Source: WPA estimates based on information from American Petroleum Institute, 1969.

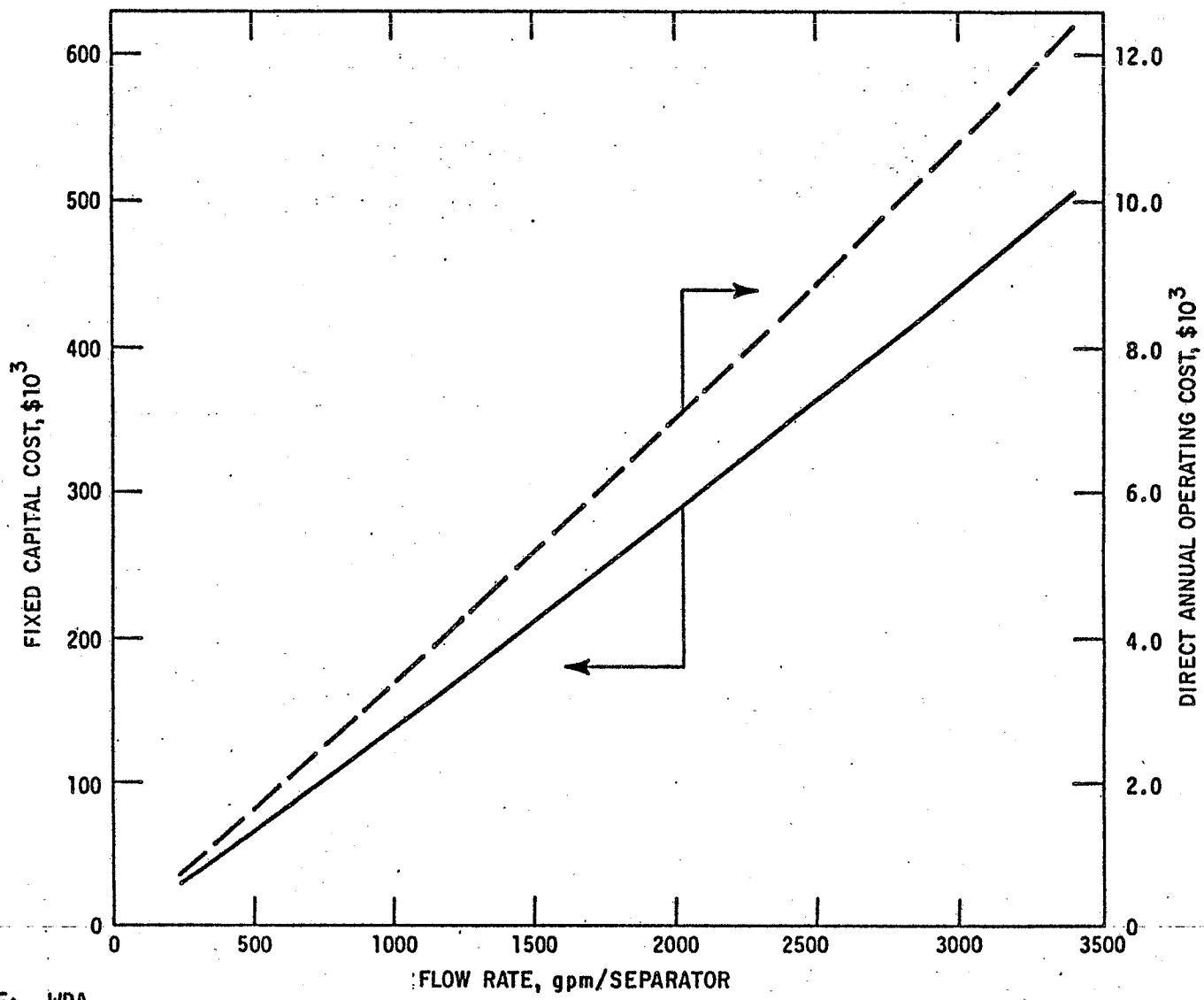

SOURCE: WPA

FIGURE 5.2-3 COST OF OIL/WATER SEPARATION

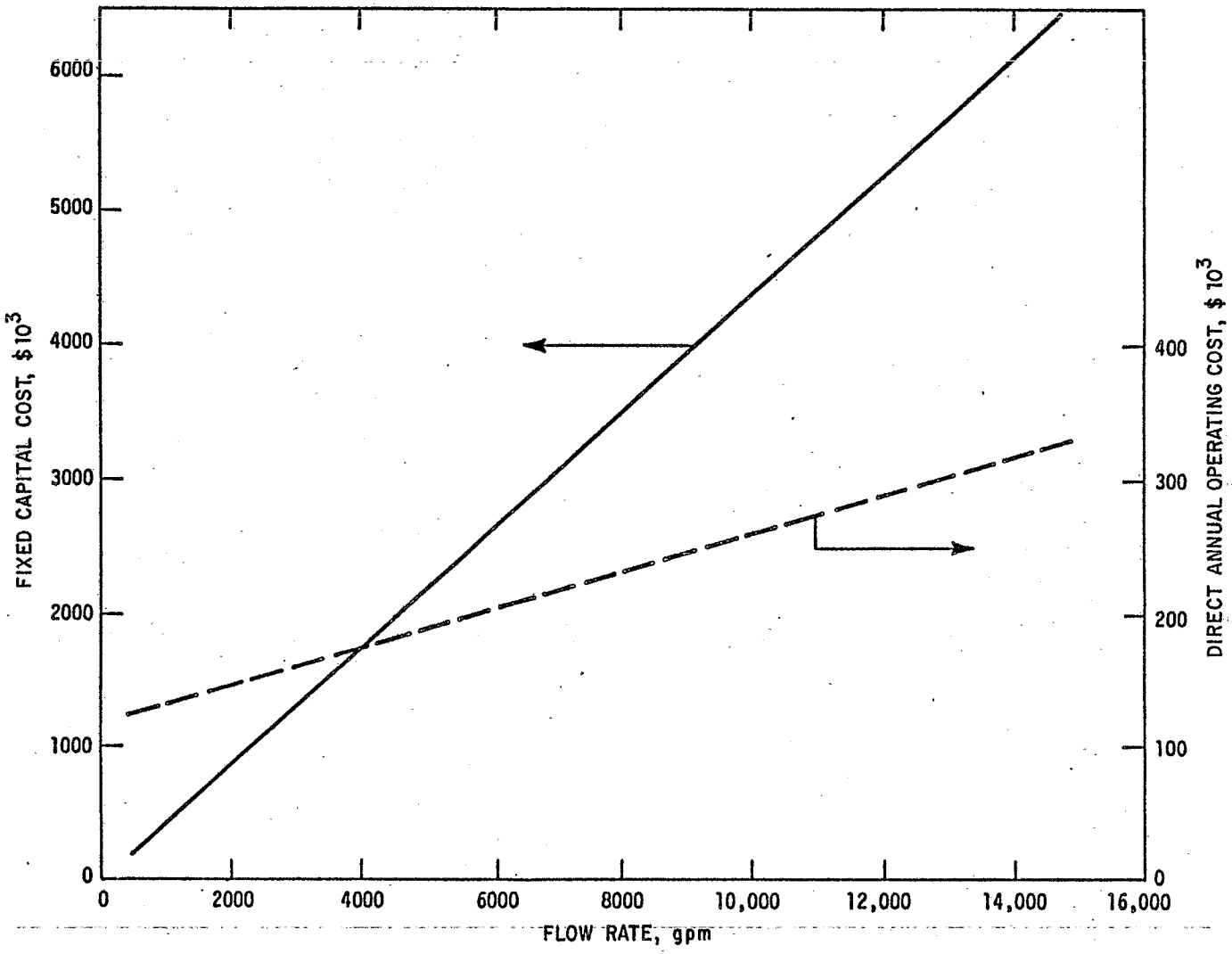

SOURCE: WPA

FIGURE 5.2-4 COST OF MULTIMEDIA GRAVITY FILTRATION

TABLE 5.2-5. DESIGN AND COST OF API OIL/WATER SEPARATOR FOR RUNOFFS AND LEACHATE

Item	Unit	Quantity
Runoff Flow Rate	gpm	191
No. of Channels (1 standby)	--	2
Channel Cross Sectional Area	ft^2	9
Channel Depth	ft	3
Channel Width	ft	3
Channel Length	ft	50
Fixed Capital Cost[a]	$\$10^3$	47
Direct Annual Operating Cost[a]	$\$10^3$	
Maintenance @ 3%[b]		1
Total Annual Control Cost[c]	$\$10^3$	14

[a] The fixed capital cost and direct annual operating cost for the standby channel are included.

[b] Maintenance is based on the fixed capital cost less contingency.

[c] See Section 6 for details on computation of the total annual control cost.

Source: WPA estimates based on information from American Petroleum Institute, 1969.

TABLE 5.2-6. DESIGN AND COST OF EQUALIZATION POND

Item	Unit	Case Studies A	Case Studies B
Flow Rate into Pond	gpm acre-ft/yr	919 1,482	1,345 2,169
Pond Area	acre	1.22	1.78
Pond Depth	ft	10	10
Liner Material	--		
Fixed Capital Cost	$\$10^3$	68	99
Direct Annual Operating Cost	$\$10^3$		
Maintenance @ 2%[a]		1.1	1.6
Total Annual Control Cost[b]	$\$10^3$	18	27

[a] Maintenance is based on the fixed capital cost less contingency.

[b] See Section 6 for details on computation of the total annual control cost.

Source: WPA estimates.

5.2.2 Dissolved Gases and Volatiles

Dissolved gases include ammonia, carbon dioxide, and hydrogen sulfide, while volatile materials are low molecular weight organics. Methods for removing these substances from water are summarized in Figure 5.2-6. Steam stripping is the most likely process to be used and has been successfully demonstrated on a laboratory scale for some oil shale wastewaters (Hicks and Liang, January 1981).

Inventory of Control Technologies--

Table 5.2-7 presents an inventory of applicable control technologies, along with their key features, for the dissolved volatiles. Basically, most technologies involve stripping of the dissolved gases by either elevating the temperature, applying vacuum, or displacement with carrier gases. More specific removal can be accomplished by using an adsorbent selective for the gas in question.

Steam stripping. Steam stripping of sour waters (e.g., waters containing dissolved ammonia and hydrogen sulfide) and coke-oven liquors

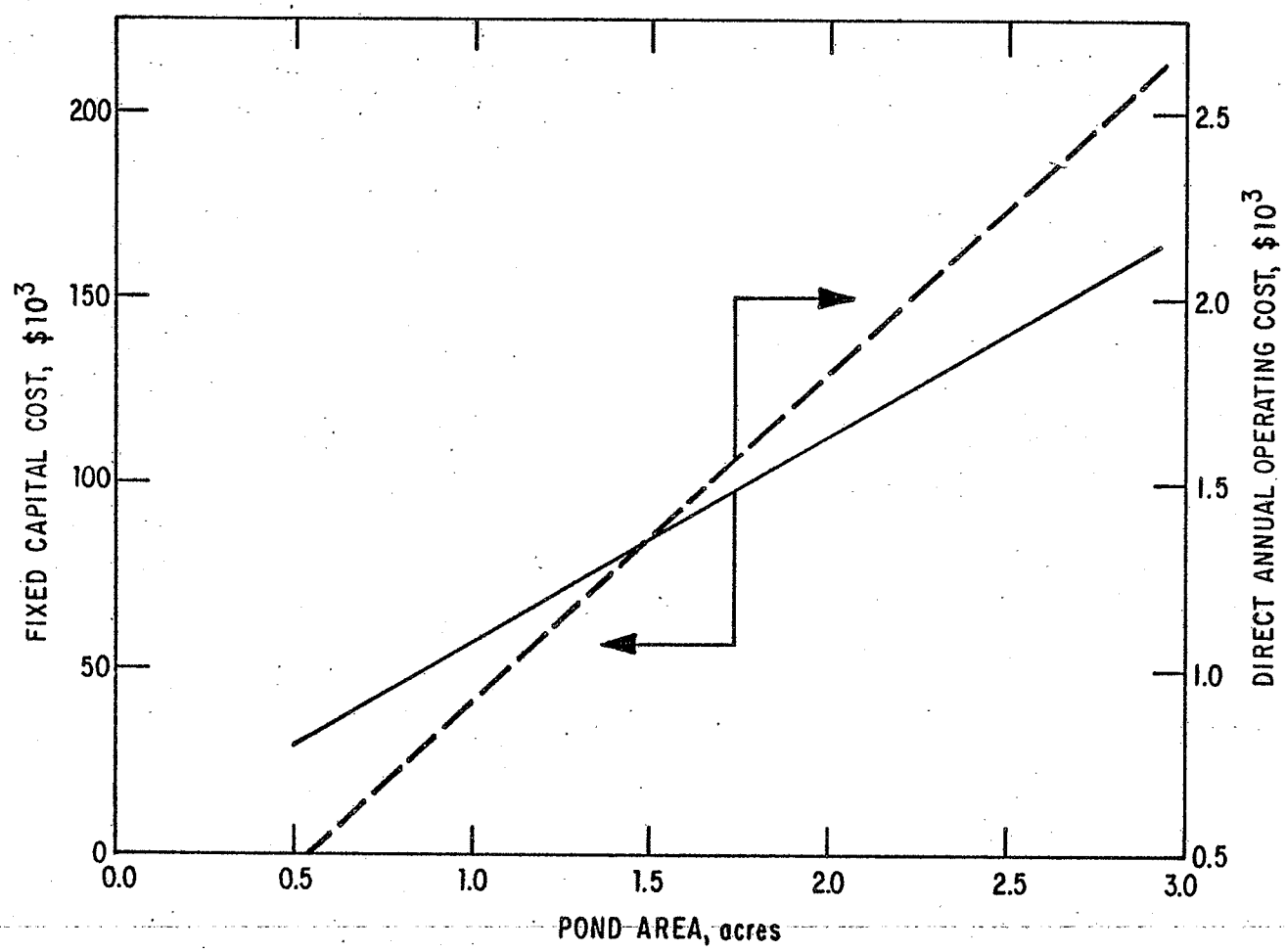

SOURCE: WPA

FIGURE 5.2-5 COST OF EQUALIZATION POND

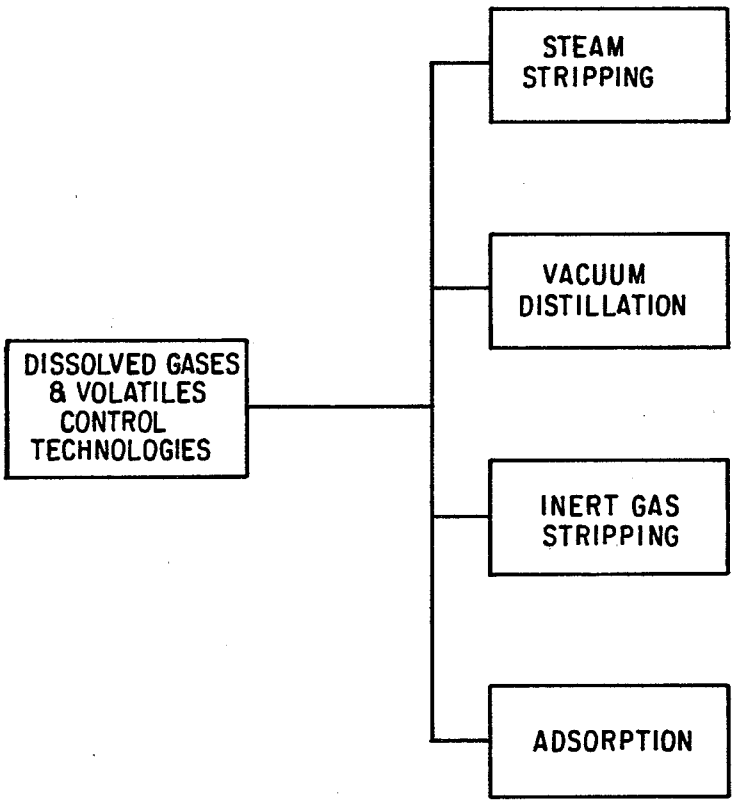

SOURCE: WPA

FIGURE 5.2-6 DISSOLVED GASES AND VOLATILES CONTROL TECHNOLOGIES

TABLE 5.2-7: KEY FEATURES OF CONTROL TECHNOLOGIES FOR DISSOLVED GASES AND VOLATILES

Control Technology	Operating Principle	Components Removed	Removal Efficiency	Feed Requirements/ Restrictions	By-products and Wastes	Comments
Steam Stripping	Increasing temperature and providing a positive flow of steam through the waste-water. Removes volatile organics and inorganics with overhead steam.	NH_3, acid gases (CO_2, H_2S, HCN), light hydrocarbons.	90+% of "free" ammonia and acid gases typical. Hydrocarbon removal varies with volatility of stripped components.	Acid/caustic for pH adjust-ment optional.	Stripped gases, uncondensed steam.	Acid/caustic addition can be used to improve the efficiency and selectivity of the stripping process.
Vacuum Distillation	Low pressure, low temperature stripping process.	As above.	As above.	As above.	Stripped gases.	High energy require-ments. Not cost competitive in a plant where stripping steam is readily available.
Inert Gas Stripping	Same as stream stripping, but using air, nitrogen, or other available inert gas in place of steam.	As above.	As above.	As above.	Stripped and inert gases.	Normally used at ambient temperature; most suitable for low concen-tration wastes.
Adsorption	Adsorption of NH_3 onto clinoptilolite and volatile organics onto polymeric resins.	NH_3, volatile organics.	High removal efficiencies possible.	Not suitable for high con-centrations.	Regenerant and adsorbent wastes.	Generally used as a polishing step.

Source: WPA.

(e.g., waters containing dissolved ammonia and carbon dioxide) is standard practice in the petroleum and steel industries. Stripping has also been used as part of the "Phenosolvan" process on coal gasification process condensates (American Petroleum Institute, March 1978; Beychok, 1967).

The dissolved gases are stripped from the solution by bubbling steam through it, generally in packed or tray columns. The steam may be directly sparged (live) or used indirectly in a reboiler, as in distillation columns. The stripped gases, along with other volatile materials, are removed in a relatively concentrated gas stream which may be treated for adsorption/recovery of a specific substance or incinerated. Carbon dioxide is readily stripped at efficiencies of +99%; ammonia strips less easily, and pH elevation may be required in some cases for 99% removal. Hydrogen sulfide does not strip as easily as carbon dioxide but can generally be removed down to the 10-20 ppm range. Costs are for equipment and steam and are proportional to the volume of water to be treated.

Steam requirements range from approximately 10 to 15 lbs steam per 100 lbs water treated. For a given separation, a greater column height is required for a lower steam rate. The selection of steam rate and column height is based on energy and equipment costs.

The stripped gases may be incinerated or treated further to recover ammonia and sulfur. Ammonia may be recovered as anhydrous ammonia, aqua (20-30%) ammonia or ammonium sulfate. In cases where the sulfate is derived from flue gas desulfurization, the sulfate route may be viable depending, in part, on the marketability of ammonium sulfate and on the costs of alternative flue gas desulfurization processes. Because oil shale plants generally will have ammonia available as a by-product, SO_2 scrubbing with NH_3 may be attractive when the technology is sufficiently developed and tested. Recovery of anhydrous ammonia involves considerable capital and energy (steam) requirements, but these are partially offset with by-product ammonia sales. The stability of the ammonia market must be considered when selecting a recovery process.

Vacuum distillation. Distillation at reduced pressure has many industrial applications, but these primarily involve distillation or fractionation of compounds with high boiling points or low thermal stability. The method may be applicable to stripping of gases and volatile compounds, but the energy requirements are high relative to those for steam or inert gas stripping.

Inert gas stripping. This method is applicable to dilute, or low strength, wastewaters for which steam stripping may not be practical. The operating principle is similar to that for steam stripping, except air, nitrogen, carbon dioxide, or other inert gases may be used. Its application to high strength liquids is generally not practical because large column heights and gas compression costs are required.

Adsorption. Dissolved gases and volatile components may be adsorbed on specific surface-active materials by passing wastewaters through a bed of the adsorbent. The gases may then be desorbed thermally, and the regenerated

adsorbent is recycled. This method is generally used in trace removal applications.

Control Technologies Analyzed--

The streams that may require removal of dissolved gases and volatiles are:

- Retort Water (stream 41)
- Gas Condensates (streams 29, 48).

Suspended matter, oils, and greases were removed from these streams in the oil/water separators and by multimedia gravity filtration, but some polar organics (e.g., phenols, fatty acids) and gaseous components (e.g., NH_3, H_2S, CO_2) remain dissolved. Steam stripping of the retort water was examined to remove the dissolved gases and volatile organic matter, and the Phosam-W process was analyzed for the recovery of NH_3 from the gas condensates. The Phosam-W process includes a steam stripping section to remove the dissolved gases and volatiles from the waters; these gases are then combined with the gases from the retort water steam stripper and the NH_3 is subsequently recovered in an anhydrous form. Table 5.2-8 presents the design parameters and cost information for the retort water steam stripper, and Tables 5.2-9 and 5.2-10 give the design and cost details for the Phosam-W process, respectively. Figures 5.2-7 and 5.2-8 provide cost curves for the two processes based on their specific applications to the MIS-Lurgi wastewaters. The description and material balance for the steam stripper are included in Sections 3.3.5 and 4.2.7, while those for the Phosam process are included in Sections 3.3.8 and 4.2.7.

5.2.3 Dissolved Inorganics

Dissolved inorganics are usually not a problem unless the compounds are judged to be hazardous (e.g., trace metals) or when fouling of equipment (e.g., boilers) occurs because of the high salt content of the waters being used. Natural waters and waters that come into contact with the solids may need to be treated if they are intended for critical uses in the plant. Processed shale moisturizing, on the other hand, may not require control of dissolved inorganics. In fact, waters with high salt content can be used for this purpose, thereby avoiding the need for other controls. Since gas condensates do not contain significant amounts of dissolved inorganics, a treatment may not be necessary.

Inventory of Control Technologies--

Methods for removal of dissolved inorganics are shown in Figure 5.2-9, while some of the key features of the technologies are presented in Table 5.2-11. The operating principles for some of the methods shown in the figure are detailed below.

Precipitation. Chemicals may be added to precipitate salts, e.g., lime addition for carbonate (hardness) removal. Processed shale is also believed

TABLE 5.2-8. DESIGN AND COST OF RETORT WATER STEAM STRIPPER

Design Parameter	Unit	Quantity
Retort Water Feed Rate	gpm	
Maximum		4,520
Average		1,200
Steam Rate (average)	10^3 lb/hr	90.0
Cooling Water Circulated (average)	gpm	2,700
Stripping Column		
Number	--	3
Diameter	ft	10
Height	ft	73
Reboiler		
Number	--	6
Surface area	ft^2	5,000
Stripped Water Cooler		
Number	--	4
Surface area	ft^2	5,000
Feed Heat Exchanger		
Number	--	21
Surface area (each)	ft^2	5,000
Fixed Capital Cost[a]	$\$10^3$	9,500
Stripping column		
Heat exchangers		
Direct Annual Operating Cost[a]	$\$10^3$	
Maintenance @ 4%[b]		310
Labor, 24 hr/day @ $30/hr		237
Steam @ $3/MMBtu		2,300
Cooling water @ 3¢/m^3 circulated		146
Operating supplies		125
TOTAL		3,118
Total Annual Control Cost[c]	$\$10^3$	5,870

[a] The equipment size and capital cost are based on maximum retort water flow rate and the operating cost (except maintenance) is based on average flow rate.

[b] Maintenance is based on the fixed capital cost less contingency.

[c] See Section 6 for details on computation of the total annual control cost.

Source: WPA estimates based on information from Peters and Timmerhaus, 1980.

TABLE 5.2-9. DESIGN OF PHOSAM-W AMMONIA RECOVERY SYSTEM

Design Parameter	Unit	Case Studies A	Case Studies B
Gas Condensate Feed Rate to Stripper*	gpm	6,721	7,054
Ammonia Rate	10^3 lb/hr	27.7	28.6
Steam Rate	10^3 lb/hr	463	476
Cooling Water Circulated	gpm	17,000	11,286
Electricity	kW	535	535
Chemicals			
H_3PO_4	lb/hr	51	51
NaOH	lb/hr	101	101
Absorption Column			
Number	--	5	5
Diameter	ft	8.9	9.0
Height	ft	50	50
Material	--	SS	SS
Reboilers on Absorber			
Number	--	5	5
Surface Area (each)	ft^2	5,000	5,000
Material	--	SS	SS
Heat Exchangers on Absorber			
Number	--	35	36
Surface Area (each)	ft^2	10,000	10,000
Material	--	SS	SS
H_3PO_4 Feed Tank			
Number	--	2	2
Capacity (each)	gal	8,500	8,500
Stripper Tower			
Number	--	5	5
Diameter	ft	2.2	2.2
Height	ft	60	60
Material	--	SS	SS

(Continued)

TABLE 5.2-9 (cont.)

Design Parameter	Unit	Case Studies A	Case Studies B
Heat Exchangers on Stripper			
Number	--	5	5
Surface Area (each)	ft^2	5,000	5,000
Material	--	SS	SS
Distillation Column			
Number	--	2	2
Diameter	ft	3.0	3.0
Height	ft	64	64
Material	--	SS	SS
Heat Exchangers on Distillation			
Number	--	2	2
Surface Area (each)	ft^2	5,000	5,000
Material	--	SS	SS
NaOH Feed Tanks			
Number	--	1	1
Capacity (each)	gal	2,000	2,000

* Maximum, including recycle to MIS gas absorber/cooler.

Source: WPA estimates based on information provided by U.S.S. Engineers and Consultants, Inc., April 1978.

TABLE 5.2-10. COST OF AMMONIA RECOVERY BY PHOSAM-W PROCESS

Item	Unit	Case Studies A	Case Studies B
Fixed Capital Cost	10^3		
Towers		9,373	9,373
Heat exchangers		11,083	11,083
Drums, etc.		2,538	2,538
TOTAL		22,994	22,994
Direct Annual Operating Cost	10^3		
Maintenance @ 4%[a]		750	750
Labor, 36 hr/day @ $30/hr		355	355
Steam @ $3/MMBtu		13,000	13,400
Cooling water @ 3¢/m³ circulated		606	606
Electricity @ 3¢/kW-hr		122	122
Chemicals		100	100
TOTAL		14,933	15,333
Credit for Ammonia Sales @ $110/ton	10^3/yr	7,604[b]	7,880[b]
Total Annual Control Cost[c]	10^3	14,876	15,039

[a] Maintenance is based on the fixed capital cost less contingency.

[b] Based on yearly average flow rates.

[c] See Section 6 for details on computation of the total annual control cost.

Source: WPA estimates based on information provided by U.S.S. Engineers and Consultants, Inc., April 1978.

to behave like a softener for inorganic carbon reduction (Humenick, 1977). The process is simple, but it will usually require the use of other methods (e.g., gravity separation, centrifugation, filtration) to remove the precipitate.

Ion exchange. Cations and anions in solution are replaced with hydrogen and hydroxyl ions on exchange resins capable of producing a water virtually free of common salts. The resins are regenerated with relatively strong acid and alkali solutions, and the regenerant wastes must be controlled. Costs go up with increasing concentration of salts in the water. Ion exchange is normally used only where a very clean water is required from a

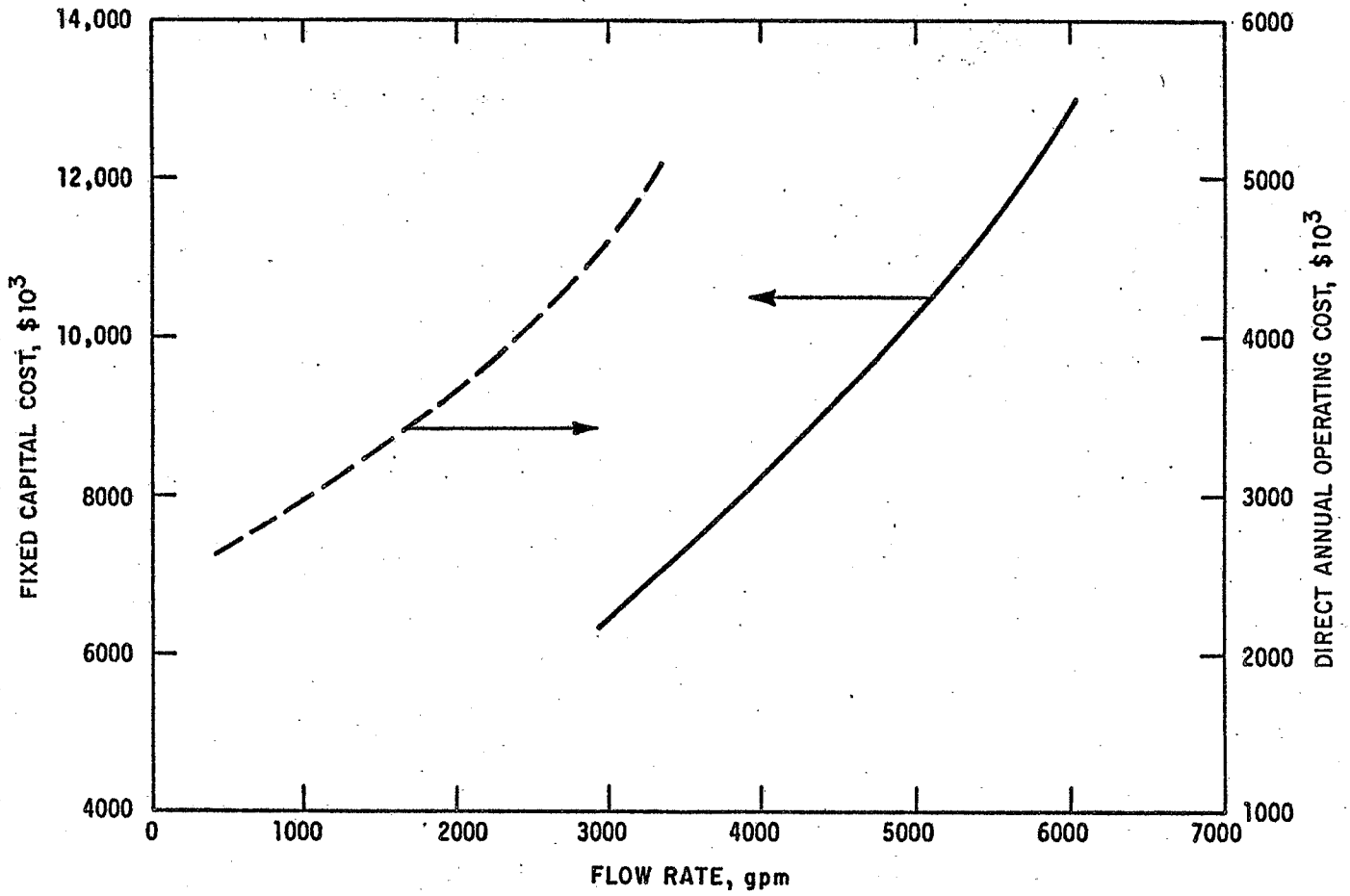

SOURCE: WPA

FIGURE 5.2-7 COST OF RETORT WATER STEAM STRIPPING

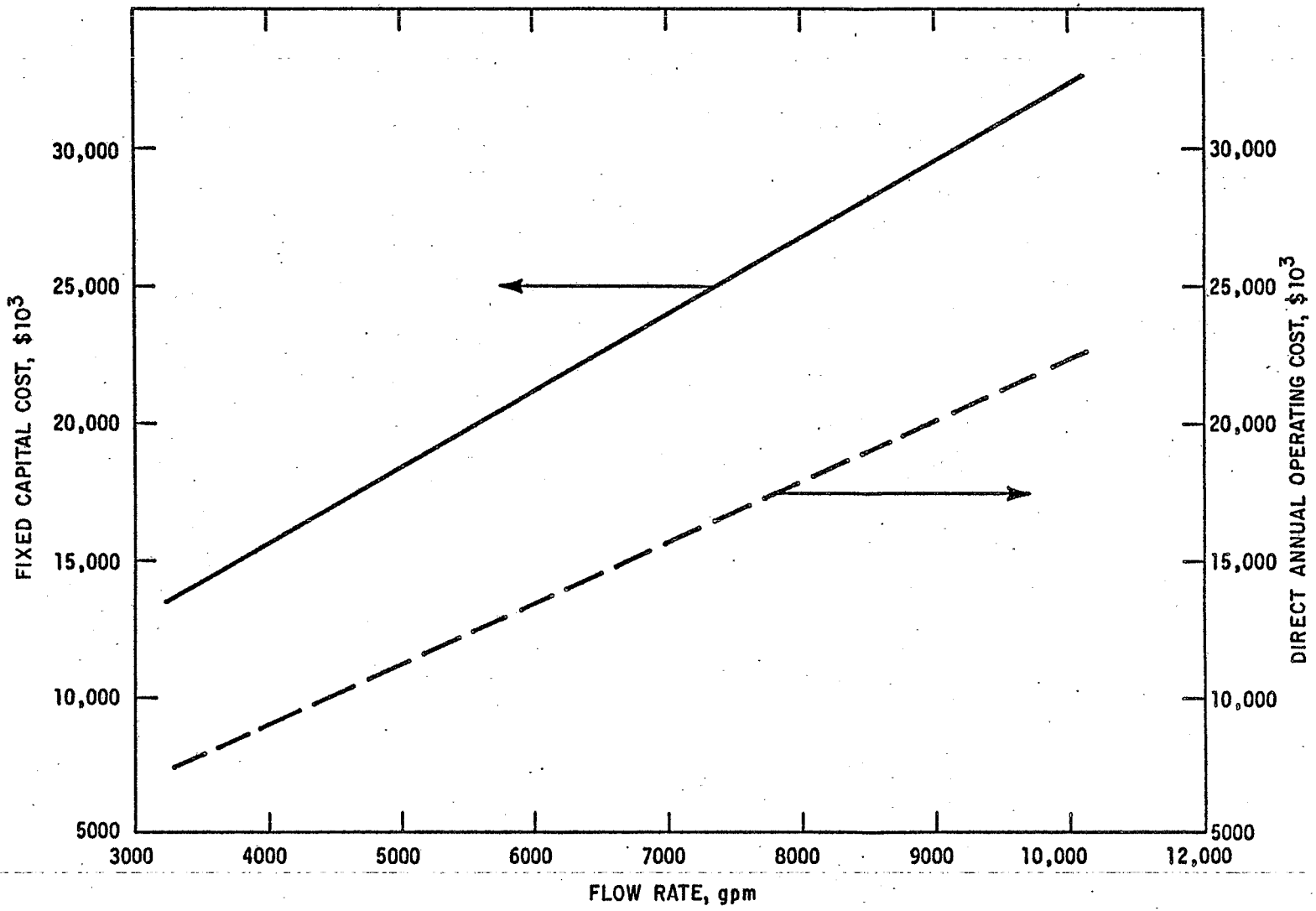

SOURCE: WPA

FIGURE 5.2-8 COST OF AMMONIA RECOVERY WITH PHOSAM-W PROCESS

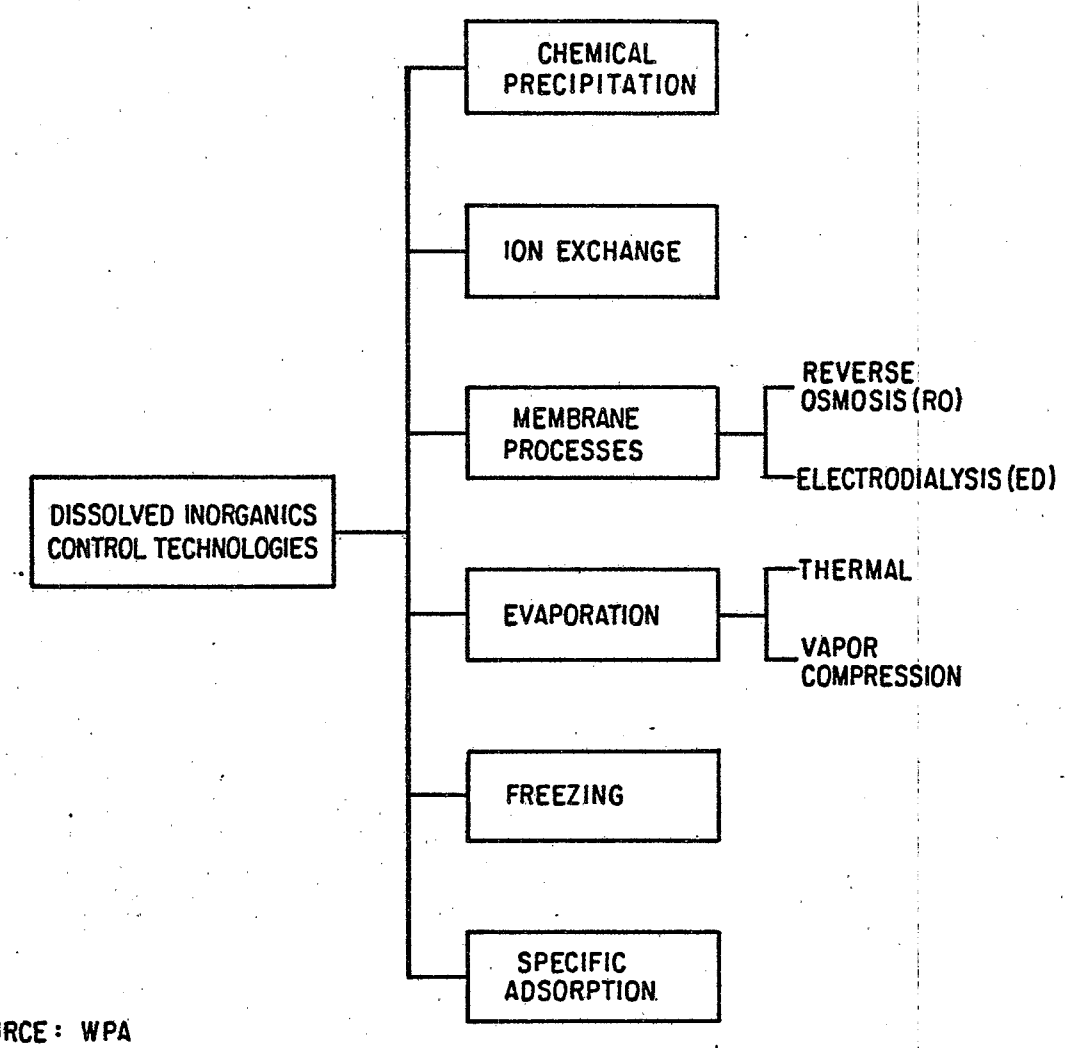

SOURCE: WPA

FIGURE 5.2-9 DISSOLVED INORGANICS CONTROL TECHNOLOGIES

TABLE 5.2-11. KEY FEATURES OF CONTROL TECHNOLOGIES FOR DISSOLVED INORGANICS

Control Technology	Operating Principle	Components Removed	Removal Efficiency	Feed Requirements/ Restrictions	By-products and Wastes	Comments
Chemical Precipitation	Use of agents to promote the precipitation of inorganic solids from wastewaters.	Ca, Mg, heavy metals, alkalinity.	Variable, depending on constituents.	Lime, polymer, and soda ash may be required.	Sludge contaminated with heavy metals.	Generally followed by filtration and/or activated carbon adsorption.
Ion Exchange	Substitution of H^+ and OH^- ions for objectionable ionic species. Exchange resins regenerated with acid base or salt solutions.	Heavy metals, F^-, CN^-, scaling species.	90+% for most ions. Regeneration frequency is a key parameter.	Regenerants, replacement resins.	Spent regenerants and resins.	Most effective as a polishing process. Clearly applicable to boiler feedwater treatment needs; of limited use in treating process wastewaters containing high concentrations of organics or dissolved solids.
Membrane Processes (RO, ED)	Separation of dissolved matter by a semipermeable membrane under a pressure (RO) or electric (ED) gradient.	Ionized salts.	90-99% removal of dissolved salts.	Filtration, pH adjustment, foulant control.	Concentrate, spent membranes.	RO and ED have been used commercially for desalination. Concentrate stream may be 10-30% of input stream.
Evaporation (Thermal, Vapor Compression)	Application of heat (solar, steam, etc.) to evaporate wastewater or concentrate streams.	All nonvolatile species will remain in brine.	99+% rejection of nonvolatile dissolved solids.	Fouling/scaling of heat exchange surfaces must be prevented.	Recovered condensate, noncondensible gases, waste brine.	Solar evaporation may be unacceptable due to air pollution. Vapor compression evaporation has been successfully tested on retort waters.
Freezing	Cooling with formation of ice which is separated from remaining brine.	Dissolved salts, including organics.	90+% possible.		Concentrate stream.	Not yet demonstrated commercially.
Specific Adsorption	Adsorption of specific ions onto resins or other adsorbent.	Boron, fluoride, trace metals.	90+% in properly designed systems.	As above.	As above.	Useful as a polishing process.

Source: WPA.

relatively clean or mildly brackish supply. The organics present are not removed and may foul the exchange resins (Calmon and Gold, 1979).

Reverse osmosis (RO). Sometimes called "hyperfiltration," RO is a process for recovering relatively pure water from solutions. Water is passed through a hyperfilter, or semipermeable membrane, which rejects dissolved materials. As in normal filtration, the driving force is hydrostatic pressure, but in this case, the pressure has to be greater than the osmotic pressure of the solution. Osmotic pressures are related to the total molar concentration of the solution and its temperature (Hicks and Liang, January 1981).

The water is passed under pressure (greater than 200 psi) through a membrane which is impermeable to most inorganic salts and many organics. These "rejected" substances remain in a concentrate stream which may be 10-20% of the feedwater volume. The treated water or permeate will generally contain less than 10%, and often less than 1%, of the rejected substances. Costs scale primarily with the volume of water to be treated but are also dependent on concentration. At very high solute concentrations (e.g., seawater), costs increase rapidly due to the high applied pressures that are required. The flux of water through the membrane, i.e., the permeate recovery rate, increases linearly with the pressure by which the applied pressure exceeds the osmotic pressure. Fluxes of 10 gal/ft^2/day have been measured for retort water at an applied pressure of 600 psi. Typical applied pressures for brackish waters range from 200 to 600 psi and greater.

Membranes consist essentially of a thin skin (0.1 to 0.25 μm) of active chemical (cellulose acetate, polyamide) on a porous substructure, which may then be housed in a spiral-wound module for commercial application. Other geometries are also available. Rejection of strong electrolytes is normally in excess of 90% and can exceed 99 percent. Nearly complete rejection is obtained from most species with molecular weights greater than about 150. However, low molecular weight nonelectrolytes (e.g., small organic molecules like urea, and weak acids such as boric acid) are poorly rejected. Rejections of these substances can sometimes be improved by adjusting the solution pH to a value where the compound dissociates (e.g., boron is rejected above pH = 10).

Some advantages of RO treatment are the low labor and space requirements and the high rejection rates obtained for a wide range of dissolved contaminants. Of particular relevance to oil shale retort water is that both organic and inorganic compounds can be simultaneously removed under favorable pH conditions and that such a system can accommodate changing water flow rates. A serious disadvantage of the process is that the membranes are susceptible to blockage by deposition of solids. This so-called fouling results from solids present in the feed solution or from precipitation of solids as the concentration in the brine exceeds the solubility limit; it may even result from biological activity on the membrane surface.

Fouling rates may be reduced by proper pretreatment and by reducing the concentration increase in the brine. Reverse osmosis does not destroy the pollutants, it merely concentrates them into a smaller liquid stream.

Reducing the concentration increase implies reducing the product recovery and increasing the amount of brine for disposal. Fouling can be further controlled by periodic washing, although there is generally a certain amount of irreversible fouling that determines membrane life and operating costs.

Costs scale proportionately with the volume of product water recovered, but they are also dependent on the degree of recovery and membrane fouling characteristics. As the concentration of pollutants in wastewater increases, so does the osmotic pressure; hence, higher applied pressures are required to maintain the desired permeate flux. Energy costs, however, are normally small relative to membrane costs.

Electrodialysis (ED). Electrodialysis is the use of an electromotive force to transport ionized materials in a solution through a diaphragm, or membrane. The process can be made selective by using ion-specific membranes which allow passage of only certain ions. A common application of electrodialysis is in the desalting of brackish waters containing 1,000-5,000 ppm of salts. A removal efficiency of 90-99% is usually achievable.

Thermal evaporation. This approach includes processes in which heat is applied to vaporize water, leaving a concentrated solution or slurry for disposal. The high energy required for evaporation is recovered in most processes by condensing the water vapor and, as a result, producing a stream of relatively pure water. Volatile contaminants, if present, may require removal in an upstream stripping process in cases where a clean product water is necessary. Multiple effect boiling (MEB) and multistage flash (MSF) are two procedures commonly used for evaporation (Water Purification Associates, December 1975).

Disadvantages of thermal processes are that volatile substances are not controlled, and (energy) costs are generally higher than for processes not involving a phase change. Problems related to scaling of heat transfer surfaces and corrosion are also encountered. These problems may be accentuated with waters containing high organic loadings, such as oil shale wastewater. Thermal processes may find application if there is a need for dirty steam, as occurs in many in situ processes.

Vapor compression evaporation. This is a method for evaporating water by the use of mechanical energy. Thermal energy required for evaporation is obtained by mechanical compression of the vapor instead of by heating. The wastewater is boiled in an evaporator to produce a vapor which is compressed in order to raise its temperature, and then it is passed through the tubes in the evaporator where the necessary heat exchange between the vapor and wastewater takes place. The vapor cools and condenses upon heat exchange and a relatively pure water is produced.

The advantage of vapor compression is that the heat required for vapor formation is recirculated so that the amount that must be dissipated is much less than the latent heat of vaporization. This approach results in relatively low energy requirements and essentially negligible cooling water requirements. The penalties are the high capital costs associated with the compressor, which must handle the large volumes of vapor, and increased

maintenance costs. Other disadvantages of vapor compression evaporation are similar to those of the thermal processes.

The energy required for the single effect vapor compression units is about 70-90 kW-hr per thousand gallons of product water. Some single effect vapor compression units (RCC evaporator) can recover up to 98% of the wastewater containing up to 11,000 mg/l total dissolved solids.

Freezing. The water is reduced in temperature to produce a solid (ice) phase and a concentrated brine. The ice is washed free of salts and then melted to produce a virtually pure water. Both inorganics and organics are removed in the brine stream. Since the costs scale with the volume of water to be treated, freezing would normally be applied to relatively concentrated low volume wastes. While this process is theoretically more efficient than evaporation, it has yet to be applied commercially. It is included in this inventory as it may be useful for controlling retort waters, provided operating problems can be resolved in the future (Barduhn, September 1967; Water Purification Associates, December 1975).

Specific adsorption. The processes in this category are similar to the ion exchange processes, except that the affinity between the sorbent materials and the solutes being removed is of a physical nature. The sorbents may be natural or synthetic and usually have pores, or lattice vacancies, of uniform size and dimensions which are specific for the solutes. The processes are not applicable to high strength wastewaters and are generally used for trace removal applications.

Control Technologies Analyzed--

The following streams may require control of dissolved inorganics:

- Lurgi Waste Heat Boiler Blowdown (stream 20)
- Stripped MIS Retort Water (stream 42)
- Phosam Stripped Condensate (stream 65 or 66)
- Boiler Feedwater (stream 92)
- Cooling Tower Makeup Water (streams 89, 105, 108).

The MIS retort water has already been steam stripped to remove the dissolved gases and volatile organics. These components are also removed from the MIS gas condensate and Lurgi gas liquor during the Phosam-W ammonia recovery process. However, the stripped retort water and condensates still may contain nonvolatile compounds. A portion of the stripped condensate is sent to the Lurgi waste heat boilers to produce low-quality steam, and this results in a blowdown with a higher concentration of nonvolatile compounds.

Cathedral Bluffs has proposed using steam-heated kettle evaporators to raise low-quality steam from the process waters (Occidental Oil Shale, Inc. and Tenneco Shale Oil Co., April 1981). With this technology, the process waters are heated indirectly with a high pressure steam to produce a low pressure, low-quality steam for use in the MIS retorts. During this process,

a blowdown, or brine effluent, containing nonvolatile compounds is also produced, and it is eventually used for moisturizing the Lurgi processed shale. Since the evaporators afford concentration of the nonvolatile compounds into a smaller stream, they have been analyzed as a control technology. Both the inorganic as well as organic nonvolatile compounds are controlled by this technology. Design and cost information for the kettle evaporators is presented in Table 5.2-12, and a cost curve is given in Figure 5.2-10. Sections 3.3.9 and 4.2.7 provide the process description and material balance, respectively.

TABLE 5.2-12. DESIGN AND COST OF KETTLE EVAPORATORS

Item	Unit	Case Studies A	Case Studies B
Feed Rate	gpm	3,373	3,712
Steam Rate	10^3 lb/hr	1,450	1,595
Number of Columns	--	20	20
Diameter	ft^2	10	10
Height	ft	12	12
Material	--	SS	SS
Reboilers			
Number	--	20	20
Surface Area (each)	ft^2	10,000	10,000
Material	--	SS	SS
Heat exchangers			
Number	--	16	18
Surface Area (each)	ft^2	5,000	5,000
Material	--	SS	SS
Fixed Capital Cost	$\$10^3$	35,235	36,000
Direct Annual Operating Cost	$\$10^3$		
Maintenance @ 4%[a]		1,146	1,171
Labor, 72 hr/day @ $30/hr		710	710
Steam @ $3/MMBtu		37,586	38,309
TOTAL		39,442	40,190
Total Annual Control Cost[b]	$\$10^3$	49,503	50,464

[a] Maintenance is based on the fixed capital cost less contingency.

[b] See Section 6 for details on computation of the total annual control cost.

Source: WPA.

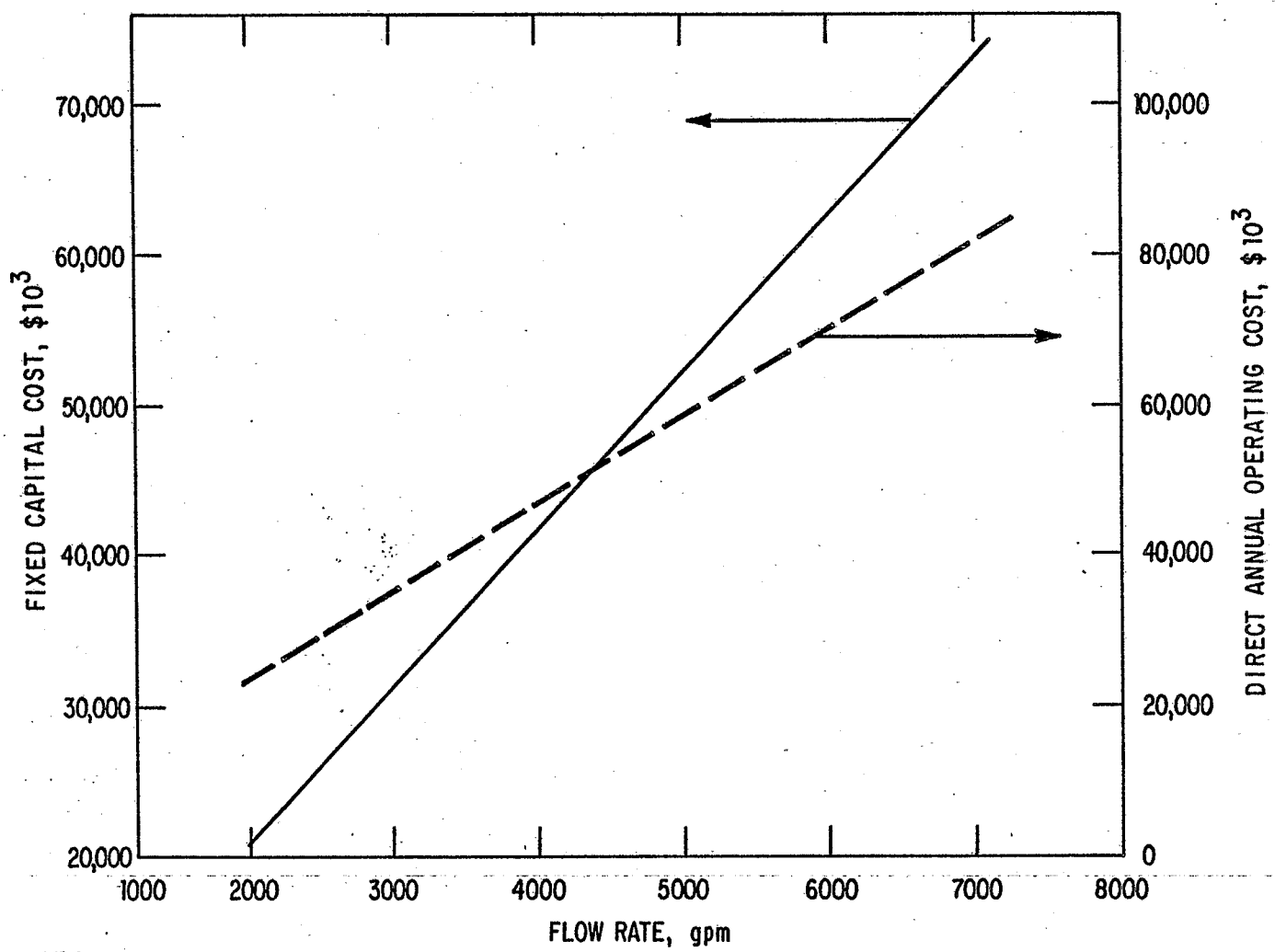

SOURCE: WPA

FIGURE 5.2-10 COST OF KETTLE EVAPORATORS

Softening was examined as the most economical treatment of the mine water makeup to prevent scaling in the boilers. In this process, calcium and magnesium ions are replaced by sodium ions using a zeolite ion exchange resin. Total dissolved solids and silica are not removed by softening, and a relatively large boiler blowdown is required to maintain acceptable concentration levels in the boilers. The boiler blowdown is used for processed shale moistening. The blowdown does represent an energy loss from the boiler system, and some heat recovery from this stream might prove cost effective. The zeolite softener is regenerated with a saline solution prepared from salt and clarified mine water. The waste regenerant, containing mainly calcium chloride, is disposed of on the processed shale after equalization with other blowdowns. Table 5.2-13 gives the basis for design and costs of boiler feedwater treatment, and Figure 5.2-11 shows a cost curve for the zeolite softener system. This technology could be considered part of the process rather than pollution control.

Clarified mine water is used as cooling tower makeup. As a treatment, some sulfuric acid is added to convert calcium carbonate to the more soluble calcium sulfate. The cooling tower is operated at 1.5 to 2.4 cycles of concentration for Case Studies A and B, respectively, which means that the concentration of dissolved species in the blowdown is from 1.5 to 2.4 times that in the makeup. Since this concentration is not excessive, the cooling tower blowdown may be used for process uses such as makeup to the FGD. Table 5.2-14 contains design and cost information for the cooling tower makeup treatment, and Figure 5.2-12 presents a cost curve for the treatment. The cooling tower makeup treatment could be considered as part of the process rather than pollution control.

Other Control Technologies Analyzed--

One additional dissolved inorganics control technology--a solar evaporation pond--was evaluated as a post-treatment for the process waters. A solar pond is simply a lined pond with enough surface area to provide an evaporation rate that is higher than the rate of inflow. The precipitated sludge can be removed periodically and disposed of in a proper manner. This technology has not been proposed by Cathedral Bluffs; however, it was analyzed as a viable option in the event that the process waters are reused in the plant and the resulting wastes are disposed of separately from the processed shale.

For example, the retort water after steam stripping can be treated further by reverse osmosis (RO), which would concentrate much of the water soluble organic and inorganic material due to rejection by the RO membranes. This concentrated material can then be placed in a solar evaporation pond for additional concentration. The RO treated water, or permeate, can be polished for final organics removal and then used as makeup to the steam boilers. Similarly, the stripped gas condensate from the Phosam-W process can be polished and then used as boiler feedwater makeup. The concentrate from the boiler feedwater treatment and the blowdown from the steam boilers, in this case, can also be placed in the solar pond along with the RO concentrate. Thus, all of the process generated aqueous wastes are eventually placed in the solar pond. A flow scheme depicting the above treatment and reuse

TABLE 5.2-13. DESIGN AND COST OF BOILER FEEDWATER TREATMENT[a]

Item	Unit	Case Studies A	Case Studies B
Boiler Blowdown (50% of softened mine water makeup)	gpm	146	144
Steam Losses	gpm	73	72
Softener Regeneration Waste	gpm	73	71
TOTAL MAKEUP (clarified mine water)	gpm	292	287
Fixed Capital Cost (includes one spare train)	10^3		
Installed equipment		126	124
Contingency and contractor fee		29	29
TOTAL		155	153
Direct Annual Operating Cost	10^3		
Maintenance @ 4%[b]		5	22
Labor, 2 hr/regeneration @ $30/hr		66	100
Chemicals			
Resin replacement @ 3% per year		1	1
Salt @ $45/ton		56	55
TOTAL		128	127
Total Annual Control Cost[c]	10^3	178	176

[a] This technology could be considered part of the process rather than pollution control.

[b] Maintenance is based on the fixed capital cost of one train less contingency.

[c] See Section 6 for details on computation of the total annual control cost.

Source: WPA estimates based on information from Peters and Timmerhaus, 1980.

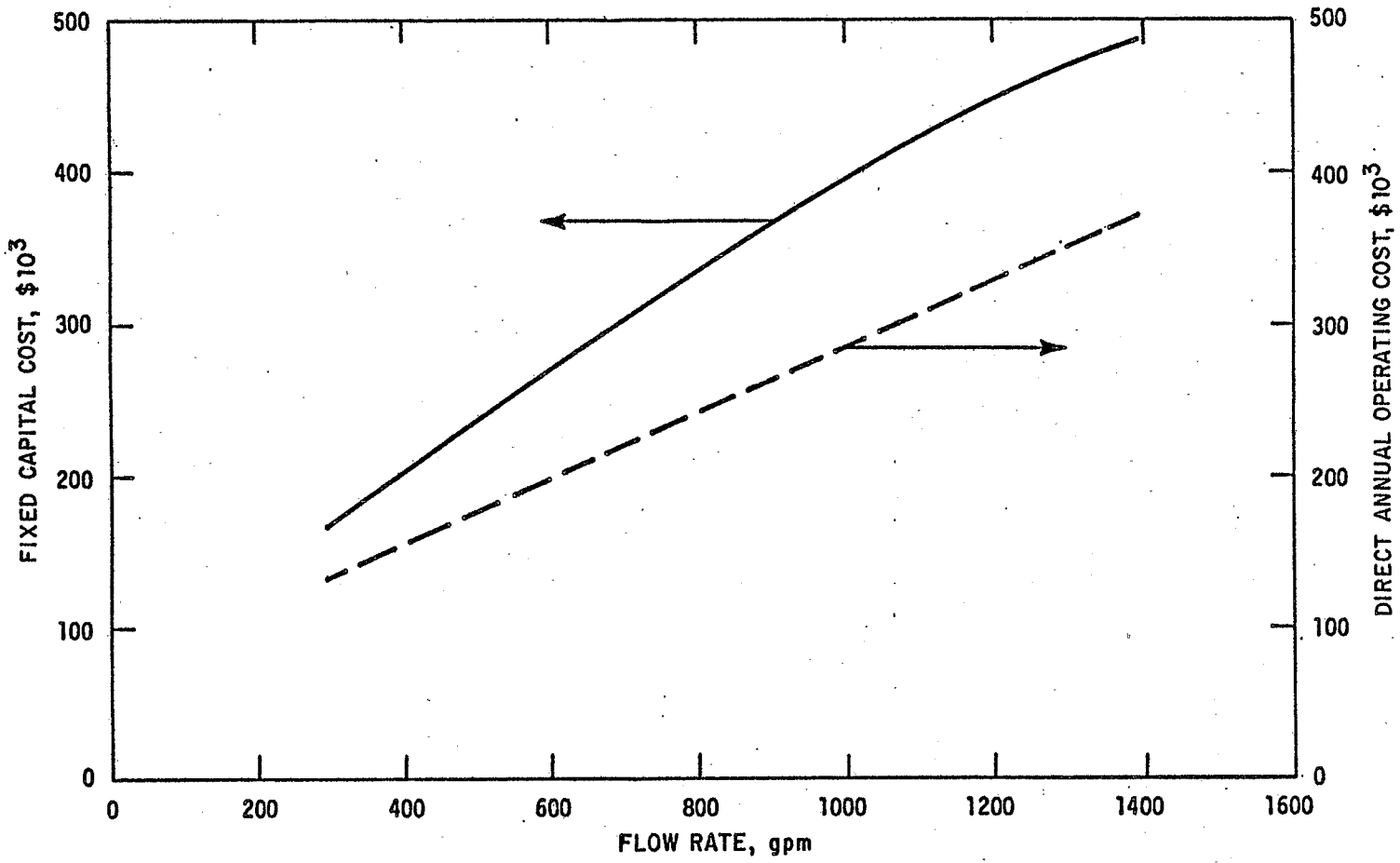

SOURCE: WPA

FIGURE 5.2-11 COST OF BOILER FEEDWATER TREATMENT WITH ZEOLITE RESIN

TABLE 5.2-14. DESIGN AND COST OF COOLING WATER TREATMENT[a]

Item	Unit	Case Studies A	Case Studies B
Evaporation and Drift Losses	gpm	1,551	1,580
Blowdown	gpm	2,951	1,090
TOTAL MAKEUP (clarified mine water)	gpm	4,502	2,670
Cycles of Concentration	--	1.5	2.4
Sulfuric Acid Addition	mg/l (ppm)	135	255
	ton/yr	1,323	1,492
Direct Annual Operating Cost	10^3		
Sulfuric acid @ $65/ton		86	97
Total Annual Control Cost[b]	10^3	91	103

[a] This technology could be considered as part of the process rather than pollution control.

[b] See Section 6 for details on computation of the total annual control cost.

Source: WPA estimates based on information from Peters and Timmerhaus, 1980.

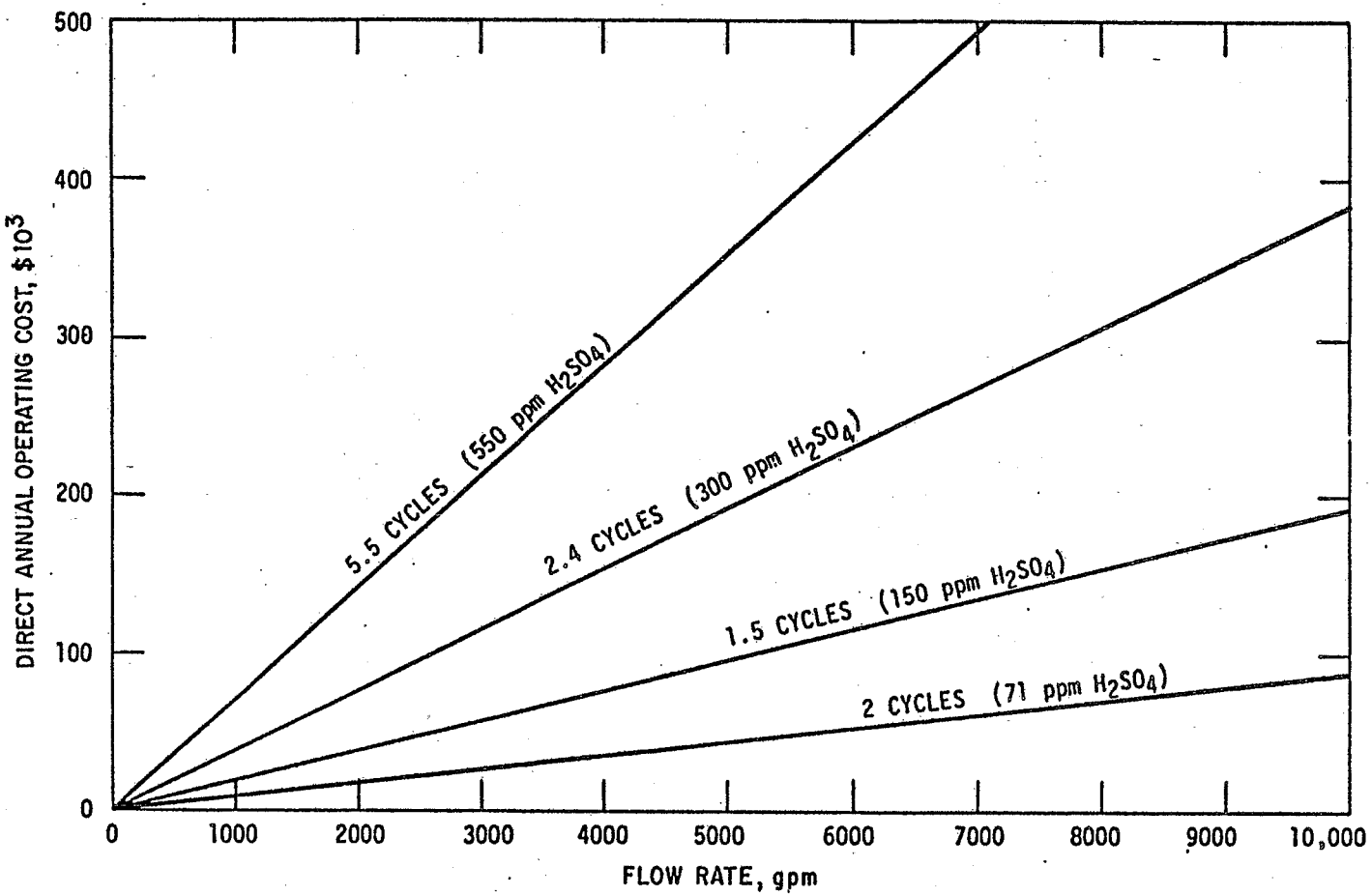

SOURCE: WPA

FIGURE 5.2-12 COST OF COOLING WATER TREATMENT

option, when applied specifically to the MIS-Lurgi process waters, is presented in Figure 5.2-13, and the design and cost data are given in Table 5.2-15. A cost curve for the solar pond is presented in Figure 5.2-14.

TABLE 5.2-15. DESIGN AND COST OF SOLAR EVAPORATION POND

Item	Unit	Quantity
Flow Rate to Pond	gpm acre-ft/yr	623 1,005
Evaporation Rate	in/yr	15
Pond Area	acres	800
Liner (chlorosulfonated polyethylene)	10^3 ft^2	35,000
Fixed Capital Cost	$\$10^3$	44,300
Direct Annual Operating Cost	$\$10^3$	
Maintenance @ 2%*		720

* Maintenance is based on the fixed capital cost less contingency.

Source: WPA estimates.

5.2.4 Dissolved Organics

Removal of volatile organics by stripping may be sufficient for reuse of process waters in processed shale moisturizing; however, nonvolatile organic components are not removable by stripping. Therefore, for higher quality uses, further treatment may be necessary. Some of the available approaches are discussed below.

Inventory of Control Technologies--

The technologies available for dissolved organics control are shown in Figure 5.2-15 and are described in Table 5.2-16.

Biological treatment. Biological processes may be aerobic, where organics are oxidized to carbon dioxide and water, or anaerobic, where the organics are reduced to methane. Both approaches produce sludge as a waste. Aerobic processes are faster and less susceptible to toxicity problems than anaerobic processes, but oxygenation equipment is required. Bench-scale tests on retort waters have shown that minor changes in retort water composition can result in a significant reduction in the performance

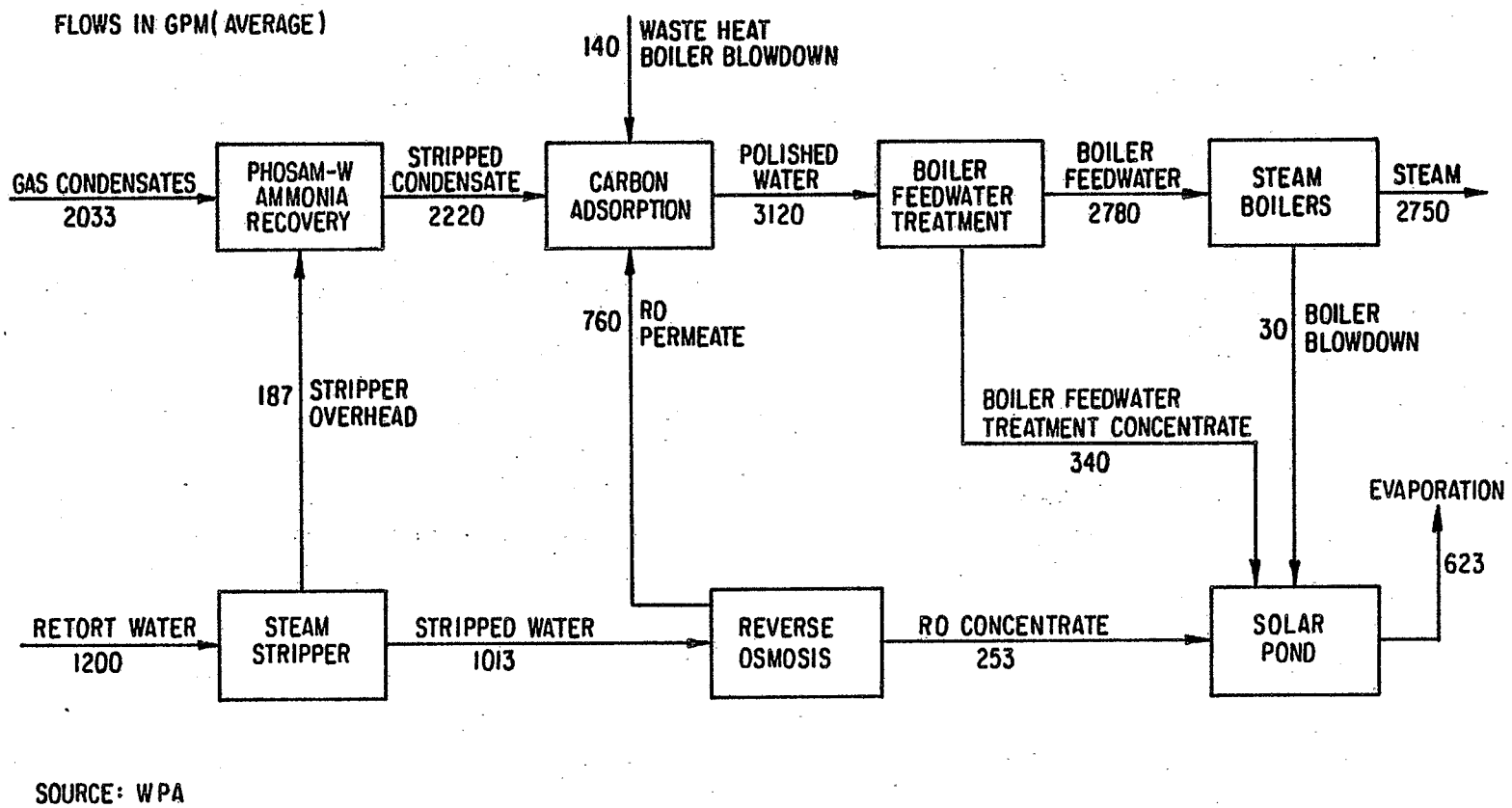

SOURCE: WPA

FIGURE 5.2-13 FLOW SCHEME FOR SOLAR EVAPORATION TREATMENT

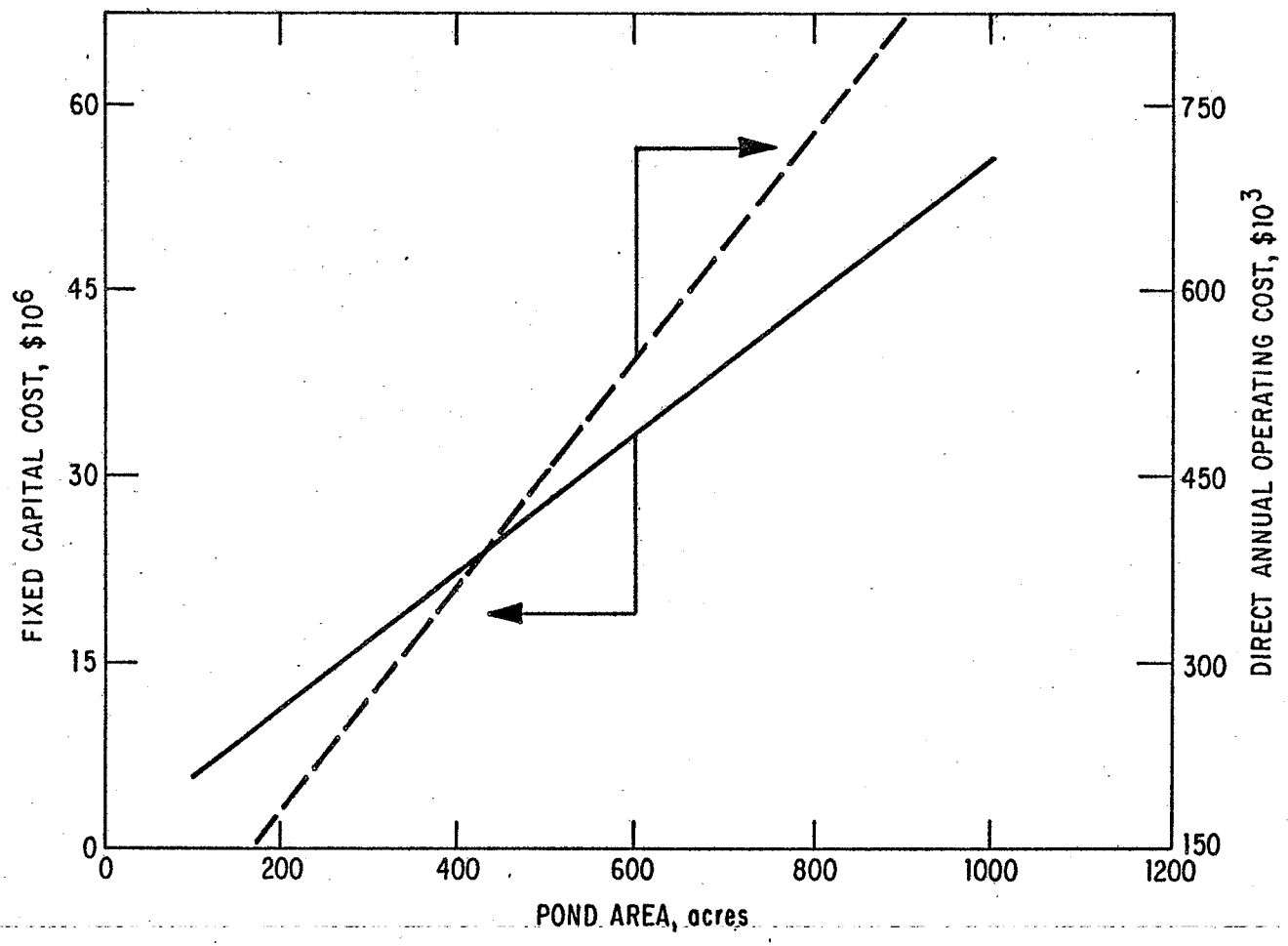

SOURCE: WPA

FIGURE 5.2-14 COST OF SOLAR POND

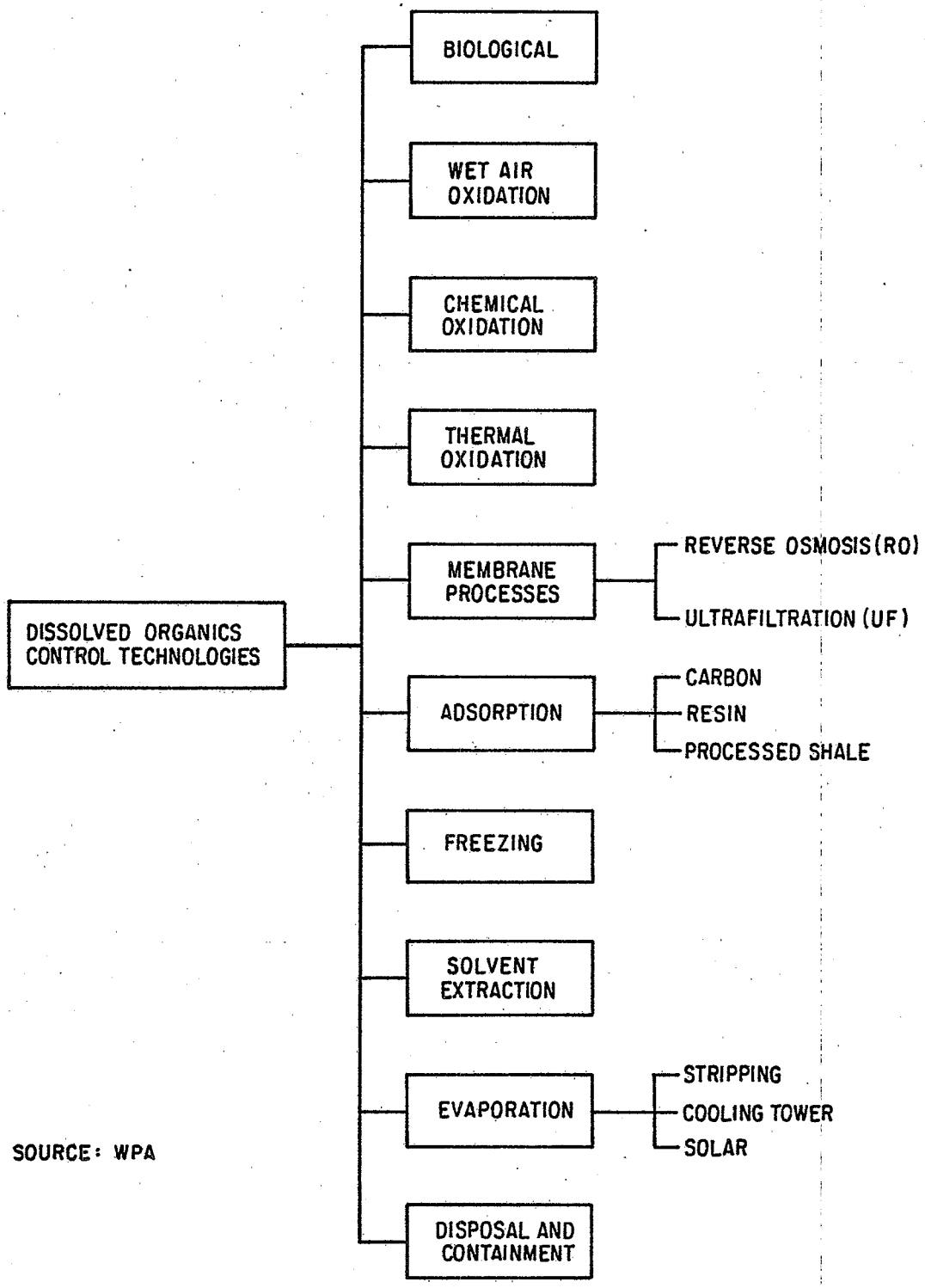

SOURCE: WPA

FIGURE 5.2-15 DISSOLVED ORGANICS CONTROL TECHNOLOGIES

TABLE 5.2-16. KEY FEATURES OF CONTROL TECHNOLOGIES FOR DISSOLVED ORGANICS

Control Technology	Operating Principle	Components Removed	Removal Efficiency	Feed Requirements/ Restrictions	By-products and Wastes	Comments
Biological	Oxidation to CO_2 and H_2O (aerobic) or reduction to CH_4 (anaerobic) in the presence of suspended bacteria.	TOC, BOD, COD.	50% removal of TOC typical for retort waters. Efficiency enhanced by addition of PAC.	Relatively constant feed temperature and pollutant loadings are required to minimize "shocks" to the system. Air or oxygen must be added to aerobic systems. Supplemental nutrients may be required.	Biosludge, CO_2 in aerobic, CH_4 in anaerobic process.	Long residence times (days) require large reactor vessels. Air emissions during aeration may require that the vessels be enclosed.
Wet Air Oxidation	Direct reaction of O_2 with wastewater in a closed, pressurized vessel at elevated temperatures.	TOC, BOD, COD, as well as some oxidizable inorganics.	90+% removal of BOD, COD, TOC is possible in a system with a residence time of one hour or greater.	Air or oxygen; heat if autothermic reaction conditions are not present.	Vent gases containing CO, CO_2, light hydrocarbons, NH_3, sulfur species.	Promising, but not proven in this application. Fairly rigorous construction materials are required.
Chemical Oxidation	Reaction of organics in wastewater with O_3, peroxides or chlorine-based oxidants.	TOC, BOD, COD, oxidizable inorganics.	90+% achievable depending upon conditions of operation.	Oxidant.	Vent gases, wastewater and reaction products.	Chlorine-based oxidants may cause problems with treated wastewater.
Thermal Oxidation	Organics are combusted and the water stream is simultaneously evaporated.	All oxidizable organics.	Essentially 100% in properly designed system.	Feed should be concentrated to reduce fuel required for water evaporation.	Flue gases.	If NH_3 or sulfur species are present, NOx and SO_2 emissions may require control. Effective but expensive control.
Membrane Processes (UF, RO)	Separation of water and dissolved matter by semi-permeable membrane under influence of pressure field.	Large molecules (UF); intermediate size and ionizable molecules (RO).	50-98% of separable components.	Filtration, pH adjustment, removal of foulants.	Concentrate stream, spent membranes.	Long-term membrane fouling not yet studied.
Adsorption (Carbon, Resin, Processed Shale)	Adsorption of organics in water by activated carbon or polymeric resin. Powdered activated carbon has been used in conjunction with biological processes.	Many organics.	50% removal of TOC typical for raw and pretreated oil shale wastewaters.	Adsorbent.	Spent adsorbent.	Probably more effective as a polishing rather than a bulk organics removal process.

(Continued)

TABLE 5.2-16 (cont.)

Control Technology	Operating Principle	Components Removed	Removal Efficiency	Feed Requirements/ Restrictions	By-products and Wastes	Comments
Freezing	Cooling to form pure ice crystals which are separated from the concentrated brine.	TOC, TDS.	90+% possible.		Concentrate stream, ice.	Volatile components are removed along with the nonvolatiles. Not yet demonstrated commercially.
Solvent Extraction	Wastewater is intimately mixed with a water-immiscible organic solvent. Dissolved organics partition occurs between water and organic solvent phase.	Components soluble in organic solvent used.	Found to be ineffective for oil shale wastewaters.	Solvent, solvent regeneration system.	Recovered organics.	Will not be used unless suitable solvent is found.
Evaporation (Stripping, Cooling Tower, Solar)	Evaporate volatile components by applying heat via steam, solar energy, or exchange with the cooling water return from the plant. Simultaneously concentrate the nonvolatile compounds.	TOC, TDS.	Variable, depending on the volatility of the compounds.	Removal of volatile components preferred.	Overhead vapors and concentrate stream.	Direct steam stripping may remove azeotropic components. Slow air and biological oxidation are possible with the cooling tower and solar evaporation.
Disposal and Containment	Fixing of the contaminants on a substrate or disposal or containment with isolation from surroundings.	TOC, TDS.	Variable, depending upon the method used and surrounding factors.	Removal of volatile components preferred.		The wastewater may be contained, or reinjected, underground. Contaminants may be chemically and physically fixed on the processed shale.

Source: WPA.

of a well-acclimated system. In the presence of biorefractory (nonbiodegradable) organics, powdered-activated carbon may be added to the bioreactors to achieve acceptable reduction in organic content. Necessary pretreatment includes stripping, pH adjustment, and nutrient addition; control of specific toxic materials may be required as well (Adams and Eckenfelder, 1974; Hicks, et al., June 1979; Hicks and Wei, December 1980).

Wet air oxidation (WAO). This is a procedure for the destruction of organic matter dissolved or suspended in water or wastewater by oxidizing with air at high temperatures. The temperatures used are above the normal boiling point of water, and the reaction is carried out under pressure to prevent boiling. The pressure is usually 600 psig or above. The degree of oxidation achieved depends on the temperature and the material oxidized.

The advantage of WAO is that the organics do not have to be biodegradable to be oxidized. In fact, WAO often produces biodegradable substances from refractory material. For economic reasons, it is recommended that WAO systems be designed to remove no more than 80% of the organics. The optimum effluent is one that has a COD/BOD ratio of unity, i.e., the chemically oxidizable material is also biologically oxidizable. Biological oxidation can be used as a post treatment (Water Purification Associates, December 1975; Wilhelmi and Knopp, August 1979).

The WAO procedure is normally used for high strength wastes because costs scale with the volume of water to be treated. The energy needs for WAO often can be supplied by heat released in the process itself if the wastewater has a high concentration of reactive material. It is an expensive process and would be considered only for high strength wastes not amenable to other treatments, such as solvent extraction.

Chemical oxidation. In this process, oxidation of the organics is caused by adding oxidizing agents to the wastewaters. The oxidants are usually comprised of ozone, peroxides, chlorine, chlorates, etc. These chemicals are nonselective; that is, they oxidize total organic carbon as well as some inorganics. The oxidation may be carried out at ambient temperature, which is an advantage. Formation of obnoxious wastes is likely with chlorinated oxidants. Explosion is also a possibility under uncontrolled conditions.

Thermal oxidation. The wastewater is evaporated and the dissolved organics are simultaneously combusted by directly firing burners that are submerged under the wastewater. Organic nitrogen and sulfur compounds will convert to NOx and SO_2, which is a disadvantage. Additional waste gases may form if the fuel combustion is incomplete. Heat transfer within the wastewater is efficient; however, due to the presence of a large amount of noncondensable combustion gases, waste heat recovery from the overhead vapors may not be practical. Energy requirements can be reduced by using a preconcentrated wastewater.

Reverse osmosis. In addition to removing inorganics, this process removes organics to a certain extent, particularly if the organics are ionized. Tests on in situ retort waters have shown that, at a high pH, about

95% of the organics are removed. Modern polyamide thin film membranes are available for high pH operation, but additional data on membrane fouling characteristics with retort waters are required. The concentrate stream produced requires treatment, possibly by WAO (Water Purification Associates, December 1975; Hicks and Liang, January 1981).

Ultrafiltration. In addition to separation of oils and suspended particles, ultrafiltration will also separate large organic molecules (MWt ≧ 1,000). It is unlikely that ultrafiltration will be incorporated into a treatment train for the removal of large organic molecules, as these are not a significant fraction of total organics in retort waters. However, ultrafiltration may be used for emulsified oil separation and, in that case, would serve as a useful pretreatment to RO (Water Purification Associates, December 1975).

Carbon adsorption. This technology is used to remove organic materials from sewage and industrial water, as well as taste and odor from drinking water. It is usually used in conjunction with biological treatment as a pretreatment or polishing treatment (Cheremisinoff and Ellerbusch, 1978; Water Purification Associates, December 1975). Laboratory results from combined carbon adsorption and biological treatment of modified in situ oil shale retort water indicate that up to 85% removal of dissolved organics can be achieved compared to approximately 50% removal with biological treatment alone (Jones, Sakaji and Daughton, August 1982).

Activated carbon is produced by charring wood or coal at high temperatures. Charring temperature is the main factor determining the adsorption characteristics of granular or powdered-activated carbon.

Carbon must be regenerated when it is exhausted. The regeneration is accomplished by passing the carbon through a furnace at high temperature, usually around 800-1,000°C, with restricted oxidation to remove the adsorbed layer on the carbon. The quality of carbon after regeneration is slightly lower than the virgin carbon, and small quantities of virgin carbon must be added to retain the required activity.

Activated carbon has ion exchange groups and can be used to remove metal ions from water. It has been found that, under proper conditions of pH and oxidation, some metal ions are adsorbed very strongly.

Regeneration costs are a significant part of overall treatment costs, making the process uneconomical for high strength wastes, for which frequent regeneration is required. Regeneration also is not attractive for small units. Energy costs for running an activated carbon wastewater treatment plant are small, not considering regeneration, and are proportional to the pressure drop across the activated carbon contactor. Fouling in carbon adsorption units is reduced if the influent stream is adequately pretreated.

Resin adsorption. Resin adsorption is a physical process for removal of organic materials. Normally, it is considered as a polishing step, after bulk organic removal in upstream wastewater treatment steps, but may be used

on waters having higher loadings than would be used for carbon. Also, it is useful for removal of specific toxic materials and phenol.

The polymer (resin) surface can be made hydrophobic or hydrophilic. Activated groups can be introduced to increase selectivity. Regeneration can be accomplished by washing with methanol, weak acid or weak base. Steam can be used to vaporize adsorbed materials.

Adsorption on processed shale. This method has been proposed for organics control in retort waters at oil shale plants. In studies at Lawrence Berkeley Laboratory, processed shale from the Lurgi, Paraho, TOSCO II, and three simulated in situ processes were contacted with four separate simulated in situ retort waters in batch and continuous (column) systems (Fox, Jackson and Sakaji, 1980). These studies indicated that the processed shale reduces the inorganic carbon by 50-98%, the organic carbon by 7-73%, and elevates the pH from initial levels of 8-9 to a final level of 10-11. An advantage of the process is that the increase in pH would facilitate downstream ammonia stripping and would reduce the loading on downstream organic removal steps.

Freezing. As previously discussed, freezing also removes dissolved organics. One advantage of freezing over evaporation processes is that volatile organics are removed as well. This process has yet to be applied commercially (Barduhn, September 1967; Water Purification Associates, December 1975).

Solvent extraction. When wastewater is contacted with a sparingly soluble immiscible organic solvent, the dissolved organic contaminants partition themselves between the aqueous and organic phases according to their relative solubility in each. The organic phase is separated and the dissolved contaminants removed in a distillation step. Alternatively, the solvent and dissolved organics may be incinerated. Solvent extraction is most economical for high strength wastes because costs scale with the volume of water to be treated and are relatively independent of the amount of substances removed. Unfortunately, effective solvents for the wide range of organics present in retort water have not been found, and it appears unlikely that solvent extraction will be useful in retort water treatment (Hicks, et al., June 1979).

Stripping. Volatile organics are removed along with ammonia and the acid gases in a stripping column or other thermal evaporative process. The amount of organics removed depends essentially on their volatility relative to water. Organics in retort water are relatively nonvolatile and indications are that less than 20% will be removed in a column stripping 99% of the ammonia. Organics in gas condensates, such as the TOSCO II foul water, are significantly more volatile, and bench-scale tests have shown that up to 85% of the organics are removed along with the ammonia. The volatile organics may then be incinerated, along with the other stripped gases, or may be adsorbed from the gas stream prior to ammonia recovery (Hicks and Liang, January 1981).

Cooling tower. The cooling tower may be regarded as a water treatment system. As such, its main function is to concentrate the dissolved salts, which may then be removed at lower cost in a sidestream or blowdown treatment stage. When using process wastewaters as cooling tower makeup, upstream removal of ammonia and organics need not be as efficient (and therefore as expensive) as when the wastewater is discharged. It has been demonstrated that refinery phenolic wastewaters can be used in a cooling tower and that bio-oxidation of phenol will occur with very high efficiencies (Hart, June 11, 1973). The conditions necessary for successful bio-oxidation are low sulfide (below 2 ppm) and small variations in pH (between 7.8 to 8.3). Chlorination is used to prevent biological growth. Corrosion of steel has been low. Ammonia will not concentrate in a cooling tower, but it will vaporize with the water.

Solar evaporation. Solar radiation incident upon the surface of an open evaporation pond is used as the energy source. Large, lined, shallow ponds are feasible for this application. The rate of evaporation depends on humidity, wind velocity and solar energy absorbed. Dyes may be added to the wastewater to increase the energy absorption, with a consequent increase in the rate of evaporation. Land is a major cost, and problems related to final disposition of the concentrated wastes may arise. Biological and slow air oxidation of the organics may occur. Volatile and odoriferous components must be removed from the wastewater prior to its evaporation.

Disposal and containment. Wastewater can be "controlled" with a minimum of treatment by some disposal or containment options. These options include processed shale wetting as part of the disposal procedure. The water and contaminants are either "cemented" or adsorbed into the processed shale. Provision of an impermeable lining under the shale pile can prevent water from percolating through to the ground if the shale does not cement. Water used for processed shale wetting should not contain any volatiles. Since water used for revegetation and leaching of processed shale piles will contribute to runoff, it may have to be of considerably higher quality than that used for moistening.

Wastewater may be injected underground (deep well injection), as in disposal of some oil well brine wastes (Mercer, Campbell and Wakayima, May 1979). However, costs for underground injection may be significant because deep wells are required to prevent contamination of upper level aquifers. Legal and environmental problems associated with underground injection have not been clarified. Reinjection of mine drainage waters may be a possibility for disposal of this stream when excesses exist. Geologic and hydrologic effects may require evaluation.

Control Technologies Analyzed--

The major streams which may require control of dissolved organics are:

- Lurgi Waste Heat Boiler Blowdown (stream 20)
- Stripped MIS Retort Water (stream 42)
- Phosam-W Stripped Condensate (stream 65 or 66).

As mentioned earlier, these waters are used to produce low-quality steam using kettle evaporators. This technology has already been discussed under control of dissolved inorganics.

Other Control Technologies Analyzed--

If the use of wastewaters with high organics loading is not acceptable for processed shale moisturizing or reuse in the plant, additional organics removal efficiency can be achieved by several technologies, such as reverse osmosis, carbon adsorption and wet air oxidation. Again, these technologies have not been proposed by Cathedral Bluffs, but they were analyzed based on their potential for application in oil shale wastewater treatment.

Reverse osmosis (RO) is a useful technology in that it affords simultaneous removal of the dissolved organics and inorganics. With this technology, the wastewater is forced through a semipermeable membrane which allows the water to pass through but rejects the dissolved matter, especially that which is highly ionized. At optimum pH, up to 95% of the organics and inorganics can be rejected. The permeate is usually a fairly clean water that is suitable for high quality water needs. Reverse osmosis of in situ retort water has been successfully demonstrated on a bench scale (Hicks and Liang, January 1981). A specific application of the RO technology to the stripped MIS retort water is illustrated in Figure 5.2-16; the estimated compositions of the feed, permeate, and concentrate are given in Table 5.2-17; design and cost data for the RO unit are presented in Table 5.2-18; and a cost curve for the treatment is provided in Figure 5.2-17.

The permeate from RO may still contain some low molecular weight organic compounds. This stream can be combined with the Phosam stripped condensate and Lurgi waste heat boiler blowdown and subjected to organics polishing by adsorption on activated carbon. With this technology, the wastewater is allowed to pass through a bed of activated carbon on which the dissolved organics are adsorbed and a cleaner water emerges. The spent carbon is regenerated periodically by steam or hot gas stripping, and the desorbed material is incinerated before it is vented to the atmosphere. If the bulk organics and inorganics have been removed previously (e.g., by RO treatment), the carbon adsorption treated water can be used for high quality water needs (e.g., as a makeup to the high-quality steam boilers). Figure 5.2-18 presents the flow scheme for the carbon adsorption technology when applied to the MIS-Lurgi process waters, while Table 5.2-19 indicates the composition of the treated water and Table 5.2-20 gives the design specifications and cost information. A cost curve for the carbon adsorption treatment in this specific application is shown in Figure 5.2-19.

The material rejected by RO would contain the bulk of the dissolved nonvolatile compounds from the retort water. Either the whole stream can be concentrated further in a solar pond (discussed earlier in Section 5.2.3) or the organic portion can be destroyed by chemical oxidation before the waste is sent for disposal. One available technology for oxidation of the organics is wet air oxidation (WAO). With WAO, the wastewater is subjected to high temperatures and pressures, and air or oxygen is introduced into the reactor to cause the oxidation of the organics. Since the method is nonselective, it

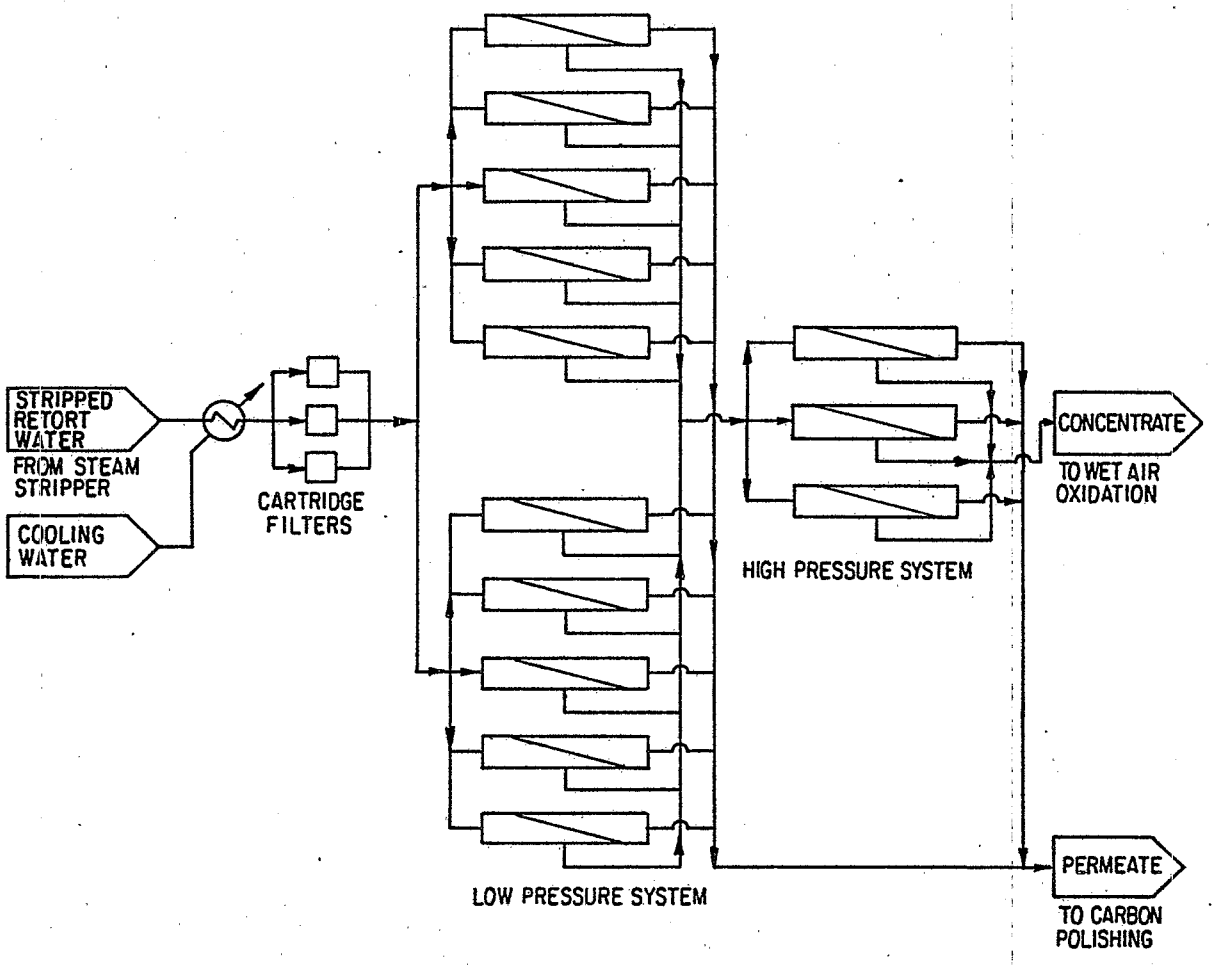

STREAM IDENTITY	STRIPPED RETORT WATER	R O PERMEATE	R O CONCENTRATE	COOLING WATER
FLOW RATE:				
10^3 lb/hr (av.)	513.9	380.3	133.6	
gpm (av.)	1013	760	253	500
TEMPERATURE, °F	100	110	110	80
PRESSURE, psig	AMB	AMB	AMB	AMB

SOURCE: WPA

FIGURE 5.2-16 REVERSE OSMOSIS PROCESS FLOW SCHEME

TABLE 5.2-17. COMPOSITION OF STRIPPED RETORT WATER BEFORE AND AFTER REVERSE OSMOSIS TREATMENT

Component	Stripped Retort Water			Treated Water After RO			RO Concentrate		
	Mass %	Maximum lb/hr (gpm)	Average lb/hr (gpm)	Mass %	Maximum lb/hr (gpm)	Average lb/hr (gpm)	Mass %	Maximum lb/hr (gpm)	Average lb/hr (gpm)
CO_2	--	--	--	--	--	--	--	--	--
NH_3	0.006	114	30	0.008	114	30	--	--	--
H_2S	--	--	--	--	--	--	--	--	--
Organic Matter	0.43	8,354	2,218	0.03	433	111	1.57	7,921	2,107
TDS	1.00	19,320	5,130	0.067	966	256	3.67	18,354	4,874
H_2O	98.56	1,907,843 (3,816)	506,507 (1,013)	99.90	1,430,882 (2,862)	379,880 (760)	94.76	476,961 (954)	126,627 (253)
TOTAL	100.00	1,935,631	513,885	100.00	1,432,395	380,277	100.00	503,236	133,608

Source: WPA estimates based on information from Hicks and Liang, January 1981.

TABLE 5.2-18. DESIGN AND COST OF REVERSE OSMOSIS TREATMENT OF STRIPPED RETORT WATER

Item	Unit	Quantity
Stripped Water Flow Rate (maximum)	gpm	3,816
Number of Elements	--	2,000
Number of Pressure Vessels	--	330
Surface Area	ft^2/element	165
Degasifier	gal	10,000
Membrane Flux	gal/day/ft^2	10-15
Fixed Capital Cost	$\$10^3$	11,350
Direct Annual Operating Cost	$\$10^3$	
Maintenance @ 4%*		369
Labor, 12 hr/day @ $30/hr		118
Electricity @ 3¢/kW-hr		280
Membrane replacement (18-month life)		1,550
TOTAL		2,317

* Maintenance is based on the fixed capital cost less contingency.

Source: WPA estimates based on information from Hicks and Liang, January 1981.

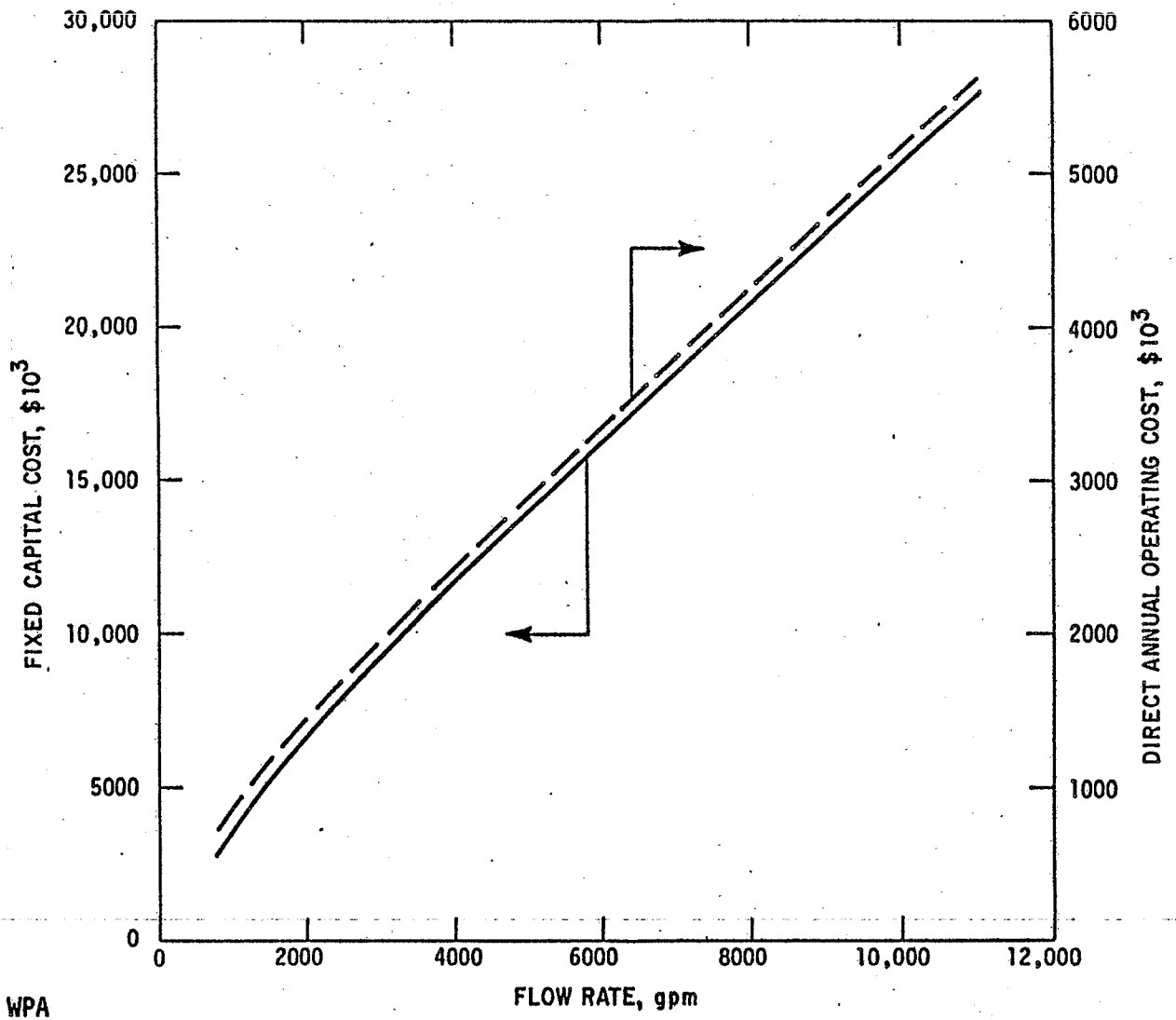

SOURCE: WPA

FIGURE 5.2-17 COST OF ORGANICS REMOVAL WITH REVERSE OSMOSIS

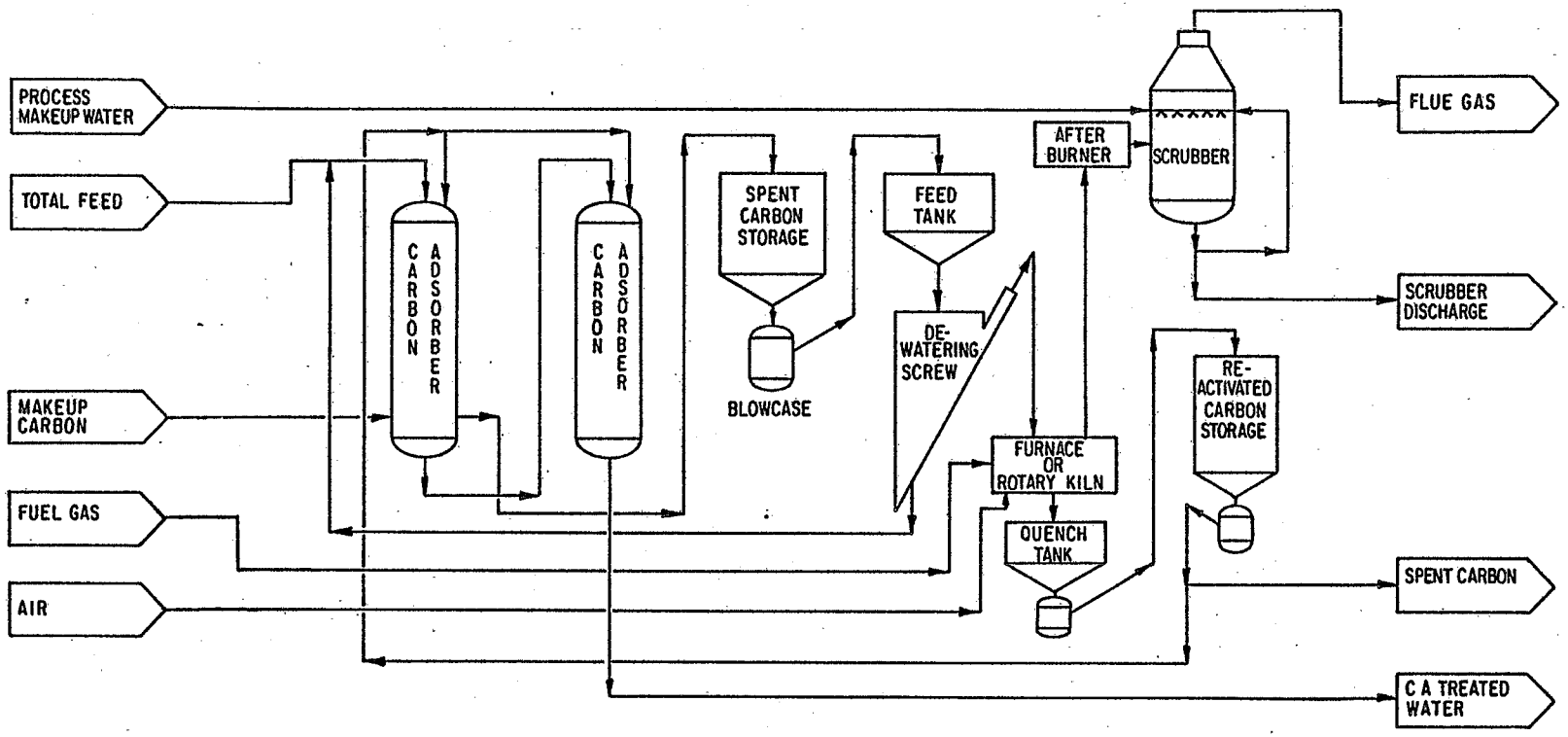

STREAM IDENTITY	FUEL GAS	TOTAL FEED	MAKEUP CARBON	AIR	SCRUBBER DISCHARGE	SPENT CARBON	C A TREATED WATER	SCRUBBER FLUE GAS	PROCESS MAKEUP WATER
FLOW RATE: 10^3 ACFM 10^3 lb/hr gpm (av)	N.D.	3120	0.08	N.D.	N.D.	0.08	3120	N.D.	N.D.
TEMP., °F	AMB	110	AMB	AMB	N.D.	N.D.	AMB	N.D.	AMB
PRESS., psig	N.D.	AMB	AMB	AMB	AMB	AMB	AMB	AMB	AMB

SOURCE: WPA

FIGURE 5.2-18 CARBON ADSORPTION PROCESS FLOW SCHEME

TABLE 5.2-19. COMPOSITION OF PROCESS WATERS BEFORE AND AFTER CARBON ADSORPTION TREATMENT

Component	Before Treatment: Treated Gas Condensate From Phosam, Maximum lb/hr (gpm)	Before Treatment: Treated Gas Condensate From Phosam, Average lb/hr (gpm)	Before Treatment: Concentrate From Lurgi Waste Heat Boiler lb/hr (gpm)	Before Treatment: Treated Retort Water From RO, Maximum lb/hr (gpm)	Before Treatment: Treated Retort Water From RO, Average lb/hr (gpm)	Total Feed To Carbon Adsorption lb/hr (gpm)	After Treatment: Treated Water to Boiler lb/hr (gpm)
NH_3	830	524	--	114	30	554	554
TDS	442	279	78	966	256	613	613
Organics	274	173	49	433	111	333	166
$(NH_4)_2SO_3$	375	237	67	--	--	304	304
H_2O	1,758,471 (3,517)	1,110,000 (2,220)	70,000 (140)	1,430,882 (2,862)	379,880 (760)	1,559,880 (3,120)	1,559,880 (3,120)
TOTAL	1,760,392	1,111,213	70,194	1,432,395	380,277	1,561,684	1,561,517

Source: WPA estimates based on information from Water Purification Associates, December 1975.

TABLE 5.2-20. DESIGN AND COST OF ACTIVATED CARBON ADSORPTION FOR PROCESS WATERS

Item	Unit	Quantity
Process Water Flow Rate	gpm	3,120
Organic Loading	mg/l	
TOC		213
COD		1,100
Organics Removed	lb COD/hr	860
Carbon Capacity	lb COD/lb C	0.6
Total No. of Adsorption Beds	--	7
No. of beds on line	--	6
Bed Diameter	ft	14.4
Bed Depth	ft	16.4
Carbon Volume/Bed	ft^3	2,670
Carbon Regeneration	lb/day	36,000
Regeneration Period	days	6
Carbon Loss in Regeneration (5%)	lb/day	1,800
Furnace Area	ft^2	720
Fuel Rate @ 3,000 Btu/lb C	10^6 Btu/day	108
Fixed Capital Cost	$\$10^3$	9,975
Direct Annual Operating Cost	$\$10^3$	
Maintenance @ 4%*		324
Labor, 16 hr/day @ $30/hr		175
Regeneration and carbon replacement		400
TOTAL		899

* Maintenance is based on the fixed capital cost less contingency.

Source: WPA estimates based on information from Cheremisinoff and Ellerbusch, 1978.

will destroy any organic matter. Only high strength feeds are economical for WAO treatment; therefore, a preconcentration of the waste, such as by RO, is desirable. A process flow scheme for the WAO technology is presented in Figure 5.2-20. The composition of the WAO sludge and the design and cost information for the process are given in Tables 5.2-21 and 5.2-22, respectively, and a cost curve is presented in Figure 5.2-21.

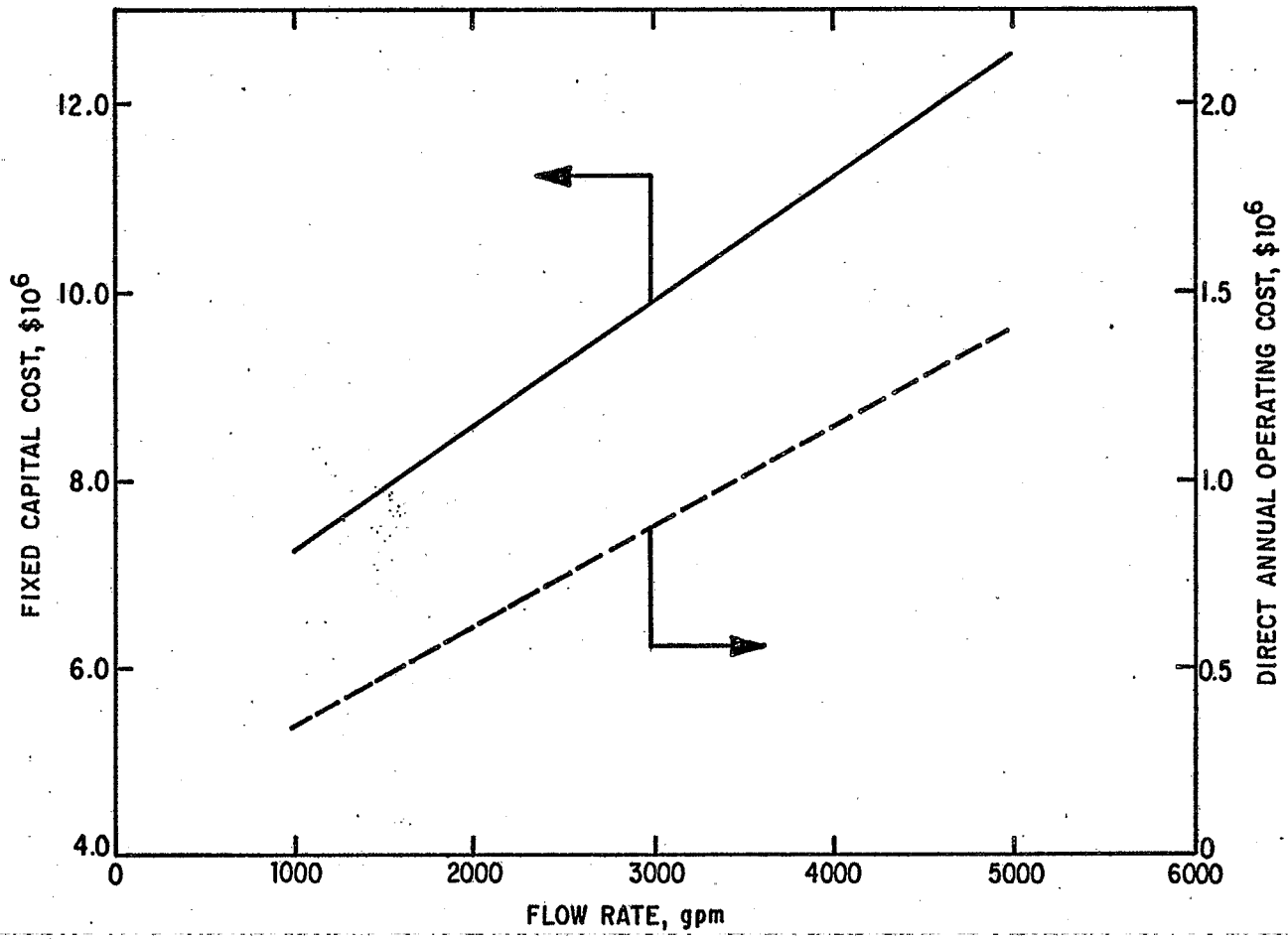

SOURCE: WPA

FIGURE 5.2-19 COST OF ORGANICS CONTROL WITH CARBON ADSORPTION

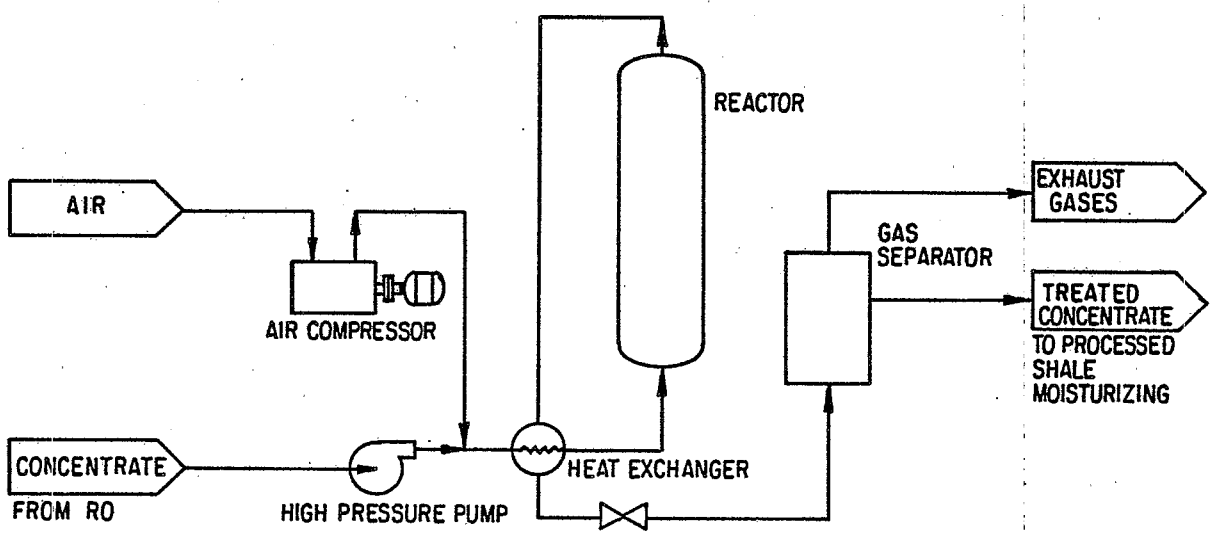

STREAM IDENTITY	CONCENTRATE	TREATED CONCENTRATE	AIR	EXHAUST GAS
FLOW RATE: 10^3 lb/hr (av)	133.6	95.5	48.5	86.6
gpm (av)	253	182		
TEMPERATURE, °F	110	160	AMB	160
PRESSURE, psig	AMB	AMB	AMB	AMB

SOURCE: WPA

FIGURE 5.2-20 WET AIR OXIDATION PROCESS FLOW SCHEME

TABLE 5.2-21. COMPOSITION OF STRIPPED RETORT WATER RO CONCENTRATE BEFORE AND AFTER WAO TREATMENT

	Before Treatment				After Treatment			
	RO Concentrate Feed to WAO		Air to WAO		Treated Water		Exhaust Gas to Atmosphere	
Component	Maximum lb/hr (gpm)	Average lb/hr (gpm)	Maximum lb/hr	Average lb/hr	Maximum lb/hr (gpm)	Average lb/hr (gpm)	Maximum lb/hr	Average lb/hr
CO_2	--	--	--	--	--	--	13,882	3,780
Organics	7,921	2,107	--	--	1,584	421	--	--
TDS	18,354	4,874	--	--	18,354	4,876	--	--
H_2O	476,961 (954)	126,627 (253)	--	--	339,831 (680)	90,221 (182)	155,147	41,192
N_2	--	--	144,251	38,299	--	--	144,251	38,299
O_2	--	--	38,345	10,180	--	--	12,781	3,300
TOTAL	503,236	133,608	182,596	48,479	359,769	95,516	326,063	86,571

Source: WPA estimates based on information from Wilhelmi and Knopp, August 1979.

TABLE 5.2-22. DESIGN AND COST OF WET AIR OXIDATION OF STRIPPED RETORT WATER RO CONCENTRATE

Item	Unit	Quantity
Concentrate Feed Rate (maximum)	gpm	954
Organic Concentration: TOC	mg/l	10,750
Reactor Residence Time	hr	1
Reactor Pressure	psia	600
Air Compressor Rating	lb/hr	182,000
Fixed Capital Cost	$\$10^3$	23,370
Direct Annual Operating Cost	$\$10^3$	
Maintenance @ 4%*		760
Labor, 10 hr/day @ $30/hr		110
Electricity @ 3¢/kW-hr		81
TOTAL		951

* Maintenance is based on the fixed capital cost less contingency.

Source: WPA estimates based on information from Wilhelmi and Knopp, August 1979.

5.2.5 Water Requirements

Steam Production--

Two types of steam are produced in the MIS-Lurgi plant. A high-quality 600 psig steam is produced in the steam generators and a low-quality 240 psig steam is produced in the kettle evaporators and Lurgi waste heat boilers.

The steam generators use clarified mine water as the boiler feed to raise approximately 7 million lb/hr of 600 psig steam. A significant amount of this steam is sent to the extraction turbogenerators to produce electricity. During this process, the pressure is reduced to 85 psig and then the steam is used for general plant needs. Another portion of the 600 psig steam is used to drive the process turbines, which reduce the steam pressure to about 300 psig.

The kettle evaporators use the stripped retort water, Phosam-W stripped condensate, and Lurgi waste heat boiler blowdown as the feed. The 300 psig steam from the process drivers is used as an indirect heat source to produce 240 psig low-quality steam in the kettle evaporators. This steam is used entirely in the MIS retorts.

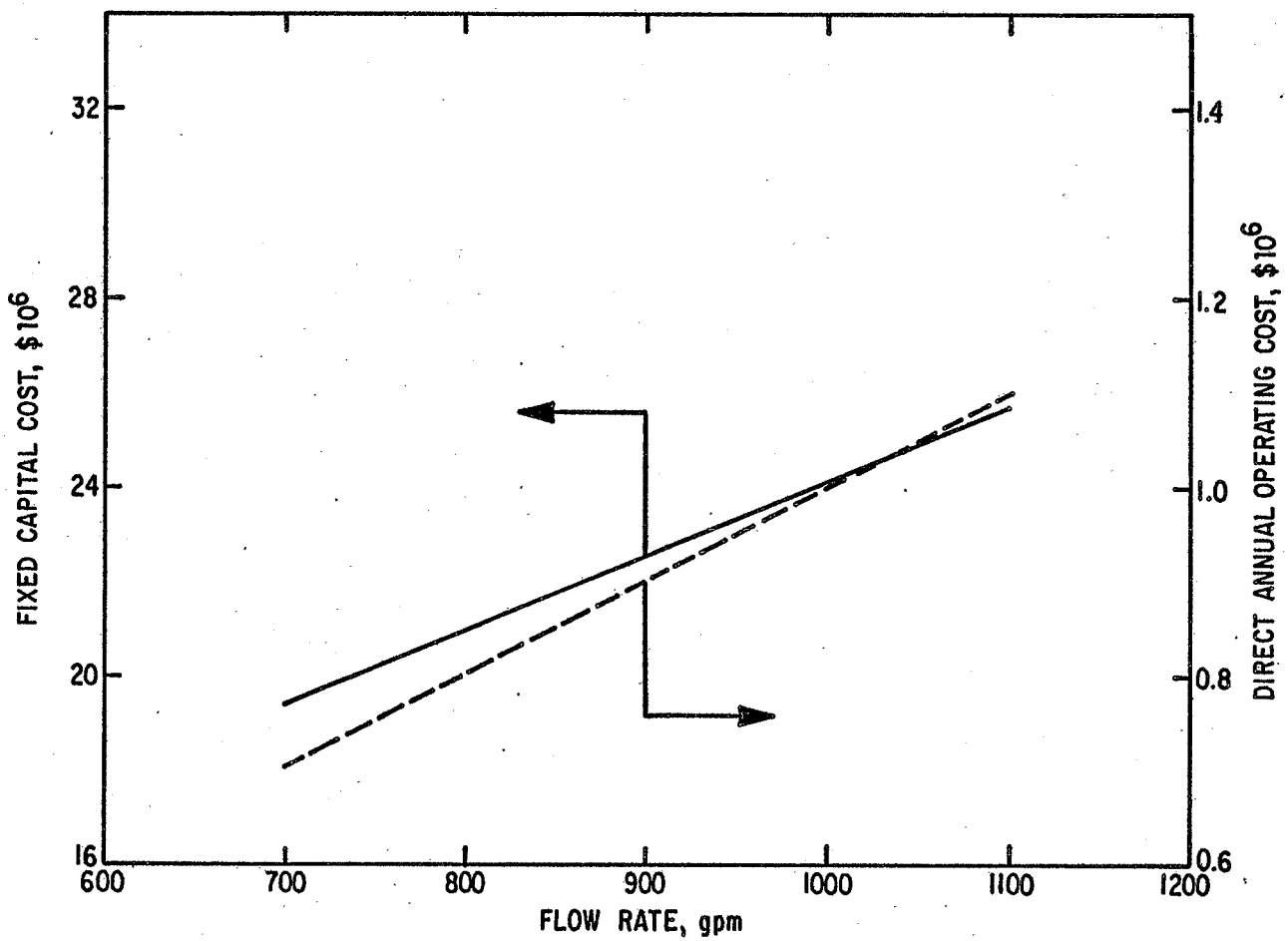

SOURCE: WPA

FIGURE 5.2-21 COST OF ORGANICS CONTROL WITH WET AIR OXIDATION

The Lurgi waste heat boilers use a portion of the Phosam-W stripped condensate as the feedwater. Low-quality steam produced from this water is also sent to the MIS retorts, while the blowdown is sent to the kettle evaporators.

Table 5.2-23 presents a rough balance for the overall steam system in the MIS-Lurgi plant. The uses indicated in the table condense the steam. Noncondensing uses, such as in driving the process turbines and in generating electricity, have not been estimated, but the net steam (produced steam minus the uses) is available for these purposes. Cathedral Bluffs has estimated that approximately 190 MW of electricity may be generated, most of which will be used on site but some may be available for export (Occidental Oil Shale, Inc. and Tenneco Shale Oil Co., April 1981).

Approximately 1% of the total steam circulated is assumed to be bled down and another 0.5% is assumed lost. These losses are made up with clarified and softened mine water. Table 5.2-24 indicates estimated water quality parameters for the boiler feedwater. During the feedwater softening, about 25% of the makeup is removed as the feedwater treatment concentrate, which is used along with the blowdown for processed shale moisturizing.

Cooling Water--

Typical cooling water requirements for the two MIS-Lurgi case studies are summarized in Table 5.2-25. Treated mine water is used as the makeup to the cooling tower. The water quality parameters for the cooling water are indicated in Table 5.2-26. The cycles of concentration are kept low; the relatively large amount of blowdown is used, after equalization with other streams, for processed shale quenching and moistening. Sulfuric acid is added to the makeup water to control carbonate scaling.

Processed Shale Moistening--

The hot processed shale leaving the Lurgi retorting area must be cooled and moistened with water in the processed shale moisturizing mixer before being sent to the disposal area. The hot shale is first quenched, resulting in evaporation of approximately 1,354 gpm of water. The steam generated from the quenching operation is scrubbed in a venturi wet scrubber and then emitted to the atmosphere. The quenched shale is moisturized to a final moisture content of approximately 10% to facilitate compaction and stabilization. The optimum moisture content and the extent to which wastewaters should be treated have not yet been determined. The blowdowns from the cooling tower, boilers, and clarifiers could be used for quenching and moistening. These water streams should not contain volatile material which would be released upon contact with the hot shale. Table 5.2-27 indicates the water flow rates (gpm) for quenching and moisturizing.

Processed Shale Disposal--

At the disposal area, water is needed for dust suppression and for revegetation. Table 5.2-27 also includes the water requirements for these needs. The water required for dust control is 2.9 mass percent of the dry

TABLE 5.2-23. STEAM PRODUCTION, USES AND BOILER FEEDWATER NEEDS

Parameter	Unit	Case Studies A	Case Studies B
Steam Production	10^3 lb/hr		
Steam Boilers (high-quality)		7,286	7,180
Lurgi Waste Heat Boilers (low-quality)		240	240
Kettle Evaporators (low-quality)		1,510	1,510
TOTAL		9,036	8,930
Steam Uses	10^3 lb/hr		
MIS Retorts (low-quality)		1,750	1,750
Retort Water Stripping (high-quality)		90	90
Phosam-W Ammonia Recovery (high-quality)		476	476
Stretford Gas Treatment (high-quality)		--	19
Kettle Evaporators (high-quality)		2,757	2,810
TOTAL		5,073	5,145
Net Steam Circulated (high-quality)	gpm	14,572	14,360
Feedwater Makeup Requirements	gpm		
Losses (0.5% of circulated)		73	72
Boiler Blowdown (1% of circulated)		146	144
Softener Regeneration Waste		73	71
TOTAL FEEDWATER MAKEUP		292	287

Source: WPA estimates.

TABLE 5.2-24. WATER QUALITY PARAMETERS FOR BOILER FEEDWATER

Parameter	Low Pressure 0-300 psi	High Pressure 600-750 psi
TDS, mg/l	2,300*	1,300*
Total Alkalinity, mg/l $CaCO_3$	470*	270*
Total Hardness, mg/l $CaCO_3$	0.3	0.2
Iron, mg/l Fe	0.1	0.025
Copper, mg/l Cu	0.05	0.02
Silica, mg/l SiO_2	100*	20*
Specific Conductance, μmhos/cm	4,700*	2,700*

* For a boiler concentration factor of 1.5.

Source: WPA estimates based on data from Krisher, August 28, 1978.

TABLE 5.2-25. PLANT COOLING WATER REQUIREMENTS

Water Use	Unit	Case Studies A	Case Studies B
Evaporation	gpm		
Retort Gas Absorber/Cooler		1,061	1,061
Lurgi Retort Gas Cooling		53	53
Stretford Gas Treating		--	28
Phosam NH_3 Recovery		364	364
Steam Boiler Power Generation		Air cooling only	
Retort Water Stripping		58	58
TOTAL EVAPORATION		1,536	1,564
Cooling Tower Drift (1% of evaporation)	gpm	15	16
Blowdown	gpm	2,951	1,090
TOTAL COOLING TOWER MAKEUP		4,502	2,670
Cycles of Concentration*	--	1.5	2.4

* Case Study A uses all of the cooling tower blowdown as makeup to FGD. Case Study B does not require such makeup; therefore, less blowdown is produced by keeping the cycles of concentration high.

Source: WPA estimates.

TABLE 5.2-26. WATER QUALITY PARAMETERS FOR COOLING TOWER RECIRCULATION[a]

Parameter	Limits Minimum	Limits Maximum	Remarks
Langelier Saturation Index[b]	+0.5	+1.5	Nonchromate treatment
Ryznar Stability Index	+6.5	+7.5	Nonchromate treatment
pH	6.0	8.0	
Calcium, mg/l as $CaCO_3$	20-50	300 400	Nonchromate treatment Chromate treatment
Total Iron, mg/l		0.5	
Manganese, mg/l		0.5	
Copper, mg/l		0.08	
Aluminum, mg/l		1	
Sulfide, mg/l		5	
Silica, mg/l		150 100	For pH < 7.5 For pH > 7.5
$(Ca)\cdot(SO_4)$, product		500,000	Both calcium and sulfate expressed as mg/l $CaCO_3$
TDS, mg/l		2,500	
Conductivity, micromhos/cm^3		4,000	
Suspended Solids, mg/l		100-150	
TOC mg/l		600	
NH_3 mg/l		100	
CN^- mg/l		5	

[a] Concentration in makeup obtained by dividing values above by cycles of concentration.

[b] The limits for the Langelier Saturation Index (an indication of $CaCO_3$ saturation) presume the presence of precipitation inhibitors in nonchromate treatment programs. In the absence of such additives, the limits would be reduced to 0 and 0.5.

Source: WPA estimates based on data from Hart, June 11, 1973.

processed shale rate, and the requirement for revegetation is 4.1 mass percent. Any water used in revegetation at the disposal area should be of a quality acceptable for agricultural use.

TABLE 5.2-27. WATER REQUIREMENTS FOR PROCESSED SHALE DISPOSAL AND DUST CONTROL

Water Use	Water Required Mass % of Shale	Shale Rate 10^3 lb/hr	Water Rate gpm
Processed Shale Disposal			
Quenching	17.3	3,909*	1,354
Moistening	11.1	3,909	868
Processed Shale Dust Control	2.9	3,909	252
Revegetation	4.1	3,909	326
Raw Shale Dust Control			
At Mine	3.2	5,144	329
Crushing	1.6	5,144	165
At Plant	1.0	5,144	103

* Dry processed shale rate.

Source: WPA estimates.

Dust Control--

The water requirements for mining, crushing, and fugitive dust control are also summarized in Table 5.2-27. These requirements are given as flow rates (gpm), as well as mass percents of the raw shale rate. The mass percents are 3.2%, 1.6%, and 1.0% for mining, crushing, and fugitive dust control, respectively.

Water used in confined mining operations should be low in volatile or toxic materials because mining personnel will be directly exposed to it. Also, the water should contain low amounts of suspended and dissolved solids to reduce clogging and scaling in spray nozzles. The water used in mining, crushing, and fugitive dust control operations cannot be recovered.

Miscellaneous Requirements--

These include potable and sanitary needs, as well as service and fire water requirements. Table 5.2-28 summarizes these water requirements in terms of makeup, discharge and overall water consumption. Any treatment necessary for these waters is standard practice and not a pollution control activity and, therefore, is not discussed in depth.

TABLE 5.2-28. POTABLE AND SERVICE WATER REQUIREMENTS

Water Use	Usage gal/Man-Shift	Consumption %	Employees No.	Makeup gpm	Discharge gpm
Sanitary/Potable					
At Plant	33	28	1,540	23	16
At Mine	33	28	1,060	16	11
Service/Fire Water					
At Plant	66	33	1,540	46	31
At Mine	50	100	1,060	24	--

Source: WPA estimates.

5.3 SOLID WASTE MANAGEMENT

The MIS-Lurgi processing facility will be a source of large quantities of plant wastes which will require disposal. Table 5.3-1 indicates the makeup of the waste material that will be discarded from the plant over a period of 30 years (project life). Sections 3 and 4 give information about the origin and composition of these streams.

The waste material disposal approach and the practices used in the disposal can have a long-lasting impact on the atmosphere and hydrology of the area as well as on the local aesthetics and habitat. The primary areas of environmental concern in this regard are:

- Surface Hydrology
- Subsurface Hydrology
- Surface Stabilization
- Hazardous Wastes.

This section briefly describes the disposal approaches that may be applicable to the wastes produced from a combined underground and aboveground retorting facility (e.g., MIS-Lurgi) involving underground mining of the oil shale. In addition, a discussion of control technologies available to mitigate the potential impacts in the areas mentioned above is presented. The applicability of these technologies should be determined on a site-specific, case-by-case basis. Specific information for the facilities involving open pit mining and aboveground retorting can be found in the Lurgi-Open Pit PCTM, while specific information for aboveground retorting operations involving underground mining can be found in the TOSCO II PCTM.

5.3.1 Disposal Approaches

The following discussion applies to the basic methods for handling solid wastes produced by the MIS-Lurgi processes. Generally, the mining method, geography and hydrology of the area, and the waste characteristics influence the applicability of a disposal approach. The key features of each approach are summarized in Table 5.3-2. A discussion of the control technologies applicable to these disposal alternatives is presented later in this section.

Landfills--

A landfill basically entails placing the waste material as a compacted fill in a suitable location. The wastes from the processing facility are transported to the disposal site by conveyors or trucks and then hauled to the active portion of the landfill. Usually, the solids are laid down in lifts of 9-18 inches and compacted to a suitable in-place density. The compacted fill may be built with a proper slope to a vertical height of 40-50 feet and then flattened, or benched, to provide a passageway for the disposal equipment and to facilitate runoff collection. The overall landfill can be constructed gradually in this fashion, using a multiple-bench arrangement.

TABLE 5.3-1. MAJOR WASTES PRODUCED OVER A PERIOD OF 30 YEARS

Stream Number	Stream Description	Quantity, 10^6 tons	Material Quantity as a Percent of Total Waste Quantity
13	Raw Shale Leachate	N.D.[a]	N.D.
17	Lurgi Processed Shale	513.60	74.95
76	Concentrate from Kettle Evaporators	24.18	3.53
78	Blowdown from Steam Boilers	9.59	1.40
80	Lime Sludge from FGD	12.68	1.85
95	Processed Shale Dust Control Water	32.39	4.73
97	Water for Revegetation	21.42	3.13
98	Treated Sanitary Water	1.77	0.26
99	Sanitary Water Treatment Sludge	N.D.	N.D.
116	Service and Fire Water	2.04	0.30
118	Storm Runoff	10.51	1.53
122	Processed Shale Leachate	N.D.	N.D.
90, 91	Blowdown from Cooling Tower and MIS Humidified Air Coolers	48.36[b]	7.06
--	Boiler Feedwater Treatment Concentrate	4.80	0.70
--	Source Water Clarifier Sludge	3.94	0.57
--	Trash, Construction Debris, etc.	N.D.	N.D.
TOTAL		685.28	100.01

[a] N.D. = Not determined.

[b] A portion of the blowdowns is used directly for processed shale moisturizing, and another is used indirectly in the form of lime sludge from FGD.

Source: DRI estimates based on information from Occidental Oil Shale, Inc. and Tenneco Shale Oil Co., April 1981.

TABLE 5.3-2. KEY FEATURES OF SOLID WASTE DISPOSAL APPROACHES

Disposal Approach	Principle	Advantages	Disadvantages
Landfills	Place wastes as fill in a convenient surface location and isolate from the surrounding environment.	Relatively simple placement and isolation of wastes. Does not interfere with production.	Dust and erosion control and reclamation/revegetation are relatively labor-intensive operations. Occupies a significant amount of land surface.
Underground Mine Backfill	Place wastes as fill in the inactive parts of the mine.	Decreases subsidence and size of necessary surface landfill. No additional maintenance or reclamation work is required. May enhance total resource recovery.	Difficult to isolate the wastes from the surrounding environment. Placement is relatively difficult, complex, and interferes with production.
MIS Retort Grouting	Fills voids in the spent retorts with a material of low permeability.	Decreases subsidence potential and minimizes influence on groundwater.	Not a developed technology.
Hazardous Waste Lagoon	Place hazardous wastes in a lined pond and isolate them.	The oil shale developer can maintain absolute control over the waste disposition.	Design, construction, and reclamation may be complex. Requires a relatively level site.

Source: SWEC.

Depending upon the geography of the disposal site, the landfill may be built on a level or nearly level surface, in the head of a valley, or across a valley. The applicable control technologies will vary somewhat with site topography but still will be designed to protect the surface and subsurface waters. Applicable control technologies include runon and runoff catchment ponds, embankments and diversion systems, liners and covers, and revegetation. Provision for structural stability of the fill is also a major consideration.

A surface landfill of some type will need to be included in most oil shale developments. This results from the shale undergoing a volume expansion upon mining, crushing, and processing, which precludes all of the shale being returned to the mine.

The head-of-valley disposal approach for the MIS-Lurgi processing wastes has been proposed by Cathedral Bluffs (Occidental Oil Shale, Inc. and Tenneco Shale Oil Co., April 1981). A description of the proposed landfill design is presented in Section 3 of this manual.

Underground Mine Backfill--

In this disposal approach, the waste material is placed in the inactive portion of the underground mine, while production continues in other parts of the mine. This approach is attractive from several viewpoints. By returning the wastes to the mine, the size of a surface landfill would be reduced. The potential for mine subsidence would be diminished, and revegetation would not be necessary. Backfilling the mine may enhance resource recovery by increasing the amount of shale that can be mined safely. Disadvantages include possible release of volatiles underground in the workplace and possible groundwater contamination.

The major considerations in backfilling involve developing logistics for carrying out simultaneous mining and disposal operations while providing protection for workers and the groundwater. For fine processed shales, like the Lurgi, hydraulic or slurry backfilling may be practical. However, additional water, above the moistening needs, would be required and a drainage collection system would be needed. The wastes may be transported to the mine by conveyors or trucks, then compacted in place, but the space limitations reduce the practicability of this approach. Alternatively, the wastes may be backfilled pneumatically, but this approach may be difficult to implement at the scale required.

Underground mine backfilling will be of limited utility in the disposal of the MIS-Lurgi processing wastes. Practically all of the spent retort volume will be occupied with the MIS processed shale; therefore, waste disposal must be accomplished in the drifts and passages, which represent only a fraction of the volume necessary for backfilling. Future access to the ore body or the spent retorts may also become difficult if the passages are sealed with the waste material.

MIS Retort Grouting--

An MIS retort is formed by removing a fraction of the material from the intended retort volume and then rubblizing the remaining material to create a chamber filled with fractured rock. This fractured material is then retorted and left in place; as a result, it may create a potential for groundwater contamination. Filling, or grouting, the interspace between the rock fragments with an impervious material may reduce the permeability of the retort and, hence, the impact on the groundwater. Potential for subsidence may also be reduced.

The design details required to accomplish this MIS grouting include modifications to the retort chamber to prepare for grouting and the grouting process itself. The product level openings at the bottom of the retort must be sealed except for a number of pipes to be used in grouting. A slurry of the grouting material would be injected at the bottom of the retort chamber and pumped until the interspace is completely filled. The openings at the top of the retort, except for a few pipes used for pressure relief during grouting, may also require sealing. This process would be similar to that of producing prepacked aggregate concrete. That is, aggregate is placed without cement and cement is then added by tremie grouting to fill the form or trench.

Other considerations involved in the design of an MIS grouting program are selecting the most advantageous grouting material and determining a method for grouting. These selections will be based on ease and consistency of penetration, overall permeability effected by grouting, stability of the grouted retort and expense.

Hazardous Waste Lagoon--

A hazardous waste lagoon would be a permitted facility either on the project site or off site. It would likely consist of a lined pond designed to be suitable for the containment of hazardous wastes. The major considerations in the design of such a pond would include a runon diversion system, an embankment, one or two impervious bottom liners with a drained sand layer below or between them, a slurry wall beneath the embankment, a surface seal layer, and provisions for reclamation and revegetation (U.S. EPA, September 1980).

Once the lagoon is filled to its capacity, wick drains could be installed to facilitate evaporation, allowing quicker consolidation of the sludge. Gravel could also be added to aid consolidation. An impermeable surface seal may then be added on top and joined with the bottom liner to isolate the wastes from the surrounding environment. The final aspects would include placing subsoil and topsoil over the seal, followed by revegetation of the surface.

5.3.2 Surface Hydrology Control Technologies

Solid waste management practices in the area of surface hydrology entail the handling of surface waters on and around the disposal facility.

Specifically, surface streams and precipitation are prevented from running onto the waste pile and contaminated waters (runoff, leachate) are kept from mixing with the natural waters.

The technologies discussed below are those that are applicable to a surface landfill, and they are summarized in Figure 5.3-1. The key features of the technologies are highlighted in Table 5.3-3 and a more detailed description with cost data is presented in the text.

Runon Diversion System--

A runon diversion system will generally be needed with any surface landfill to prevent surface water from flowing onto the waste material and becoming contaminated or causing erosion. The system may include ditches, lined channels, conduits, and embankments arranged to direct the flow of surface water around or away from the waste material, and energy dissipators to moderate the impact of the flow.

The complexity and extent of the system will vary widely based on the amount of water to be diverted and the arrangement of the site. For a fill on a relatively level site, runon diversion may require only a system of channels and small embankments to deflect surface flow away from the landfill. In the case of a head-of-valley fill or a cross-valley fill, runon diversion might include an embankment dam to retain peak flows from the design storm until they can be passed through a conduit beneath or around the fill. Alternatively, the system may consist of a conduit or channel large enough to pass the design flow without an embankment (without retention).

The costs for three runon diversion systems were estimated and they are plotted in Figure 5.3-2. Examples 1 and 2 consisted of runon retention in combination with continuous controlled release. Example 3 was designed for no retention, which necessitated a large channel and extensive use of reinforced concrete energy dissipators; the higher cost associated with such a system is illustrated in the figure.

Examples 1 and 2 also consisted of an earth embankment for the retention of runon and an embedded conduit for controlled release. Channeling of the controlled release flow around the waste pile in Example 1 was accomplished with a lined canal, while Example 2 utilized an extension of the embedded conduit for the controlled release.

The cost of a runon diversion system will be influenced by: the size of the drainage area and topography which affect the runon rates, retentions, and embankment material quantities; the size, length, and complexity of controlled release structures and channeling systems; and the need for and extent of energy dissipators and/or drop structures. For example, the runon from a site with a large drainage area in a gently sloping topography could be diverted quite efficiently by an unlined canal or channel; another site with small runoff rates, but highly erodible steep topography, may necessitate cost-intensive lined channels, flumes or conduits, as well as drop structures or energy dissipators. In summary, the cost of this system is highly site-specific.

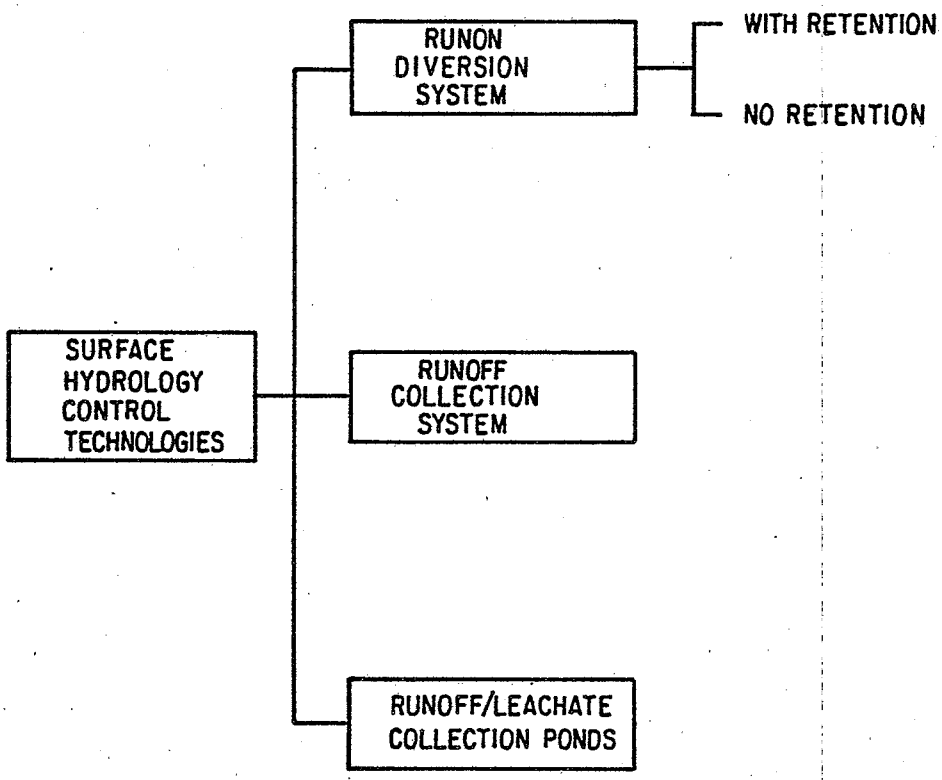

SOURCE: SWEC

FIGURE 5.3-1 SURFACE HYDROLOGY CONTROL TECHNOLOGIES

TABLE 5.3-3. KEY FEATURES OF SURFACE HYDROLOGY CONTROL TECHNOLOGIES

Control Technology	Principle	Purpose	Comments
Runon Diversion System	Uses channels and embankments to prevent surface water from contacting the waste material.	Reduces erosion and increases site stability. Reduces the amount of water contacting the waste material, thereby reducing the potential for surface water pollution.	Reduces the amount of water contaminated, thereby reducing treatment costs.
With Retention	Embankment dam holds peak flows for controlled release, evaporation, or percolation into the ground.		Requirements for the channel or conduit are greatly reduced. Provides flexibility in the use of the collected water.
No Retention	Channel or conduit is sized to convey peak flow with no retention of water.		Eliminates the need for runon retention structures and associated maintenance. More expensive than using an embankment for retention and controlled discharge of the peak flow.
Runoff Collection System	Drained benches collect and remove precipitation falling on the disposal site.	Reduces erosion of fill and infiltration into fill. Collects water for reuse or discharge.	Decreases erosion and infiltration. Requires maintenance.
Runoff/Leachate Collection Ponds	Lined ponds are used to retain leachate and runoff.	Prevents release of contaminated waters.	Collects water for reuse, treatment and discharge.

Source: SWEC.

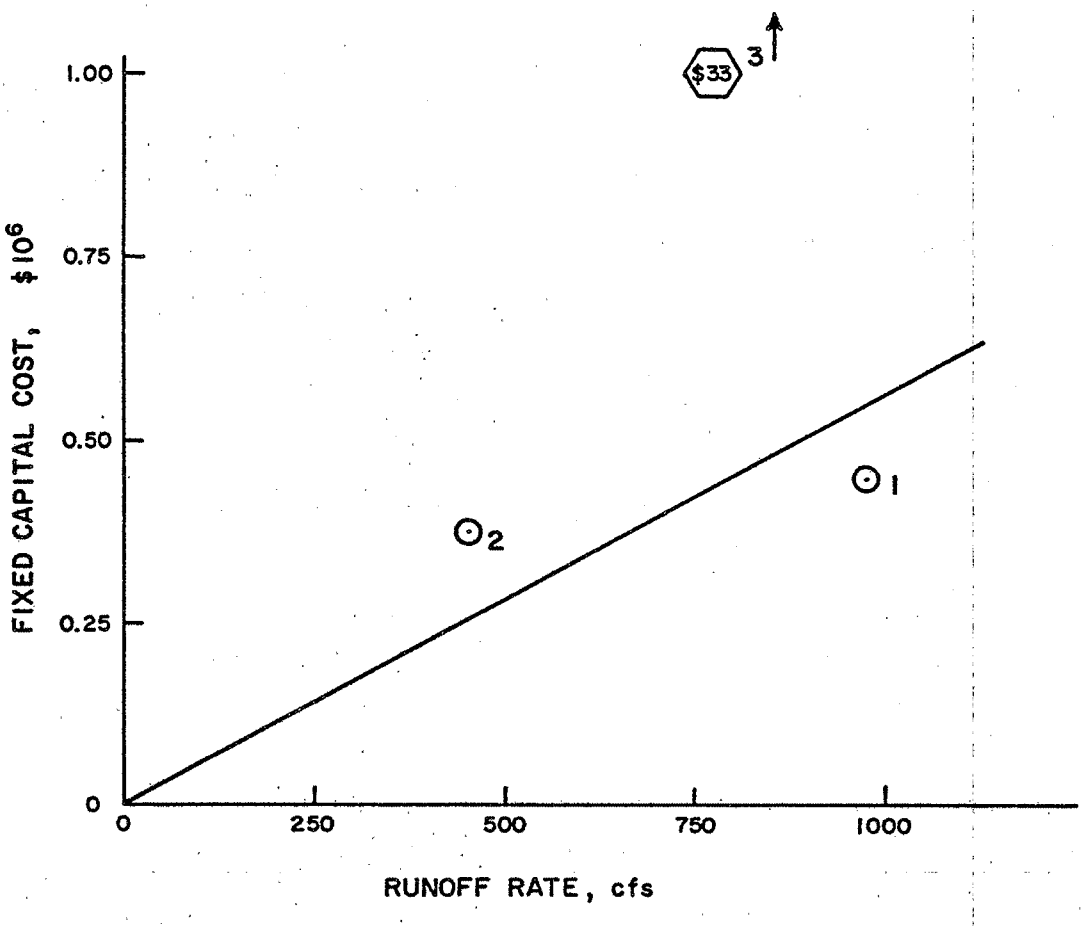

NOTES:

Examples 1 & 2 include retention with embankments and continuous controlled release through an embedded conduit.

Example 3 was designed to handle the maximum flow without retention.

Example 1 is specific to the MIS-Lurgi case studies.

See Section 6.2.3 for details on the solid waste management cost methodology.

SOURCE: SWEC

FIGURE 5.3-2 RUNON DIVERSION COSTS

Runoff Collection System--

A runoff collection system usually consists of a system of channels, ditches, and conduits arranged to prevent the surface water that has contacted the waste material from leaving the site. Another purpose of this system is to drain the surface water from the wastes to limit the erosion and infiltration potential. Collected water may also be used to meet process needs.

The basic elements of this system are backsloped benches on the face of the landfill and a means of collecting the water from the fill surface. Generally, half-round pipes, impervious membranes, or highly compacted soil or wastes are used to line ditches which collect the runoff from the bench and the segment of the landfill slope above it, as shown in Figures 5.3-3 and 5.3-4. The ditches empty into central conduits leading to a containment/evaporation pond at the toe of the landfill. On larger piles or in areas with extensive rainfalls, small embankments on the crest of the landfill or on the benches might be used to retain the runoff and thus limit the peak flows into the rest of the drainage system.

A problem with limiting the peak flows using embankments on the waste pile is that the water ponded on the landfill will have a greater tendency to infiltrate the waste material. This increased infiltration could have a detrimental effect on the stability of the slope and will somewhat increase the amount of water which must be handled by the leachate collection system (discussed under subsurface hydrology).

The costs for a variety of runoff collection system designs were estimated and these are plotted in Figure 5.3-5. Example 1 used shaped benches with unlined ditches for lateral conveyance and concrete weir collectors and corrugated metal pipe with energy dissipators for vertical conveyance. It also incorporated some temporary retention of runoff on the waste pile surface, which reduced the necessary capacity and cost of the vertical conveyance portion of the system. Example 2 used split corrugated metal pipe to line the collection ditches to facilitate lateral conveyance, and concrete weir collectors and corrugated metal pipe with energy dissipators for vertical conveyance. Example 3 used the lined ditches for lateral conveyance, with a concrete flume and a stilling basin for vertical conveyance.

The cost data, as can be seen in the plot, are highly dependent on the particular design, and no single cost curve relationship can be drawn through the data points. Example 1, which assumes a more modest design, defines the lower boundary of the cost envelope, and Example 3 defines the high end of the cost envelope.

Runoff/Leachate Collection Ponds--

At the outlet of the collection system for surface runoff, a structure is needed to contain the collected water for reuse, treatment and discharge, or for evaporation. The structure would consist of an embankment across a former stream channel to form a pond, and the pond may be lined or unlined

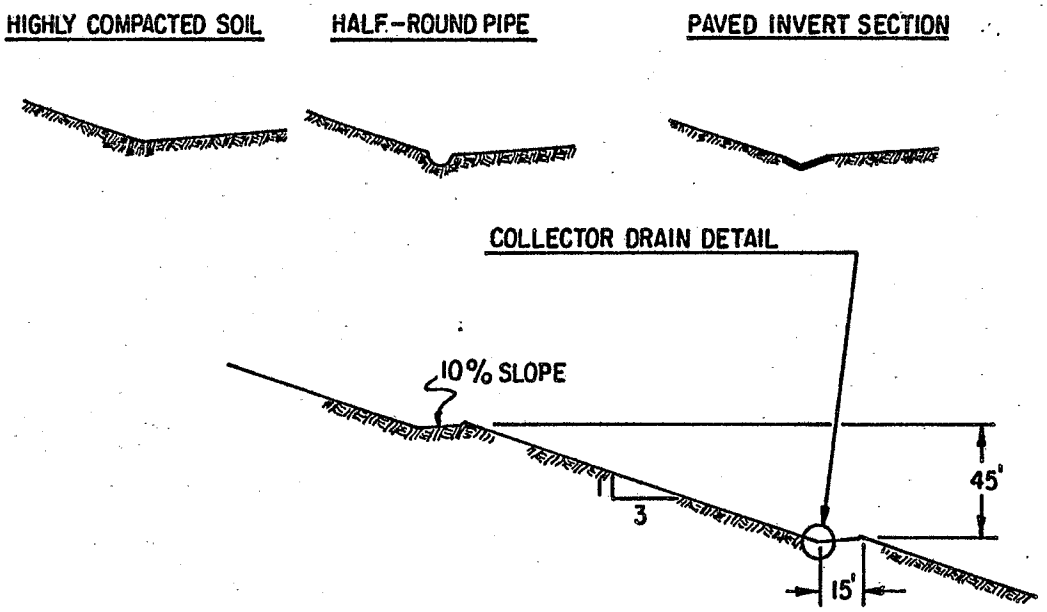

SOURCE: SWEC based on Colony Development Operation, March 1980

FIGURE 5.3-3 TYPICAL RUNOFF COLLECTION SYSTEMS

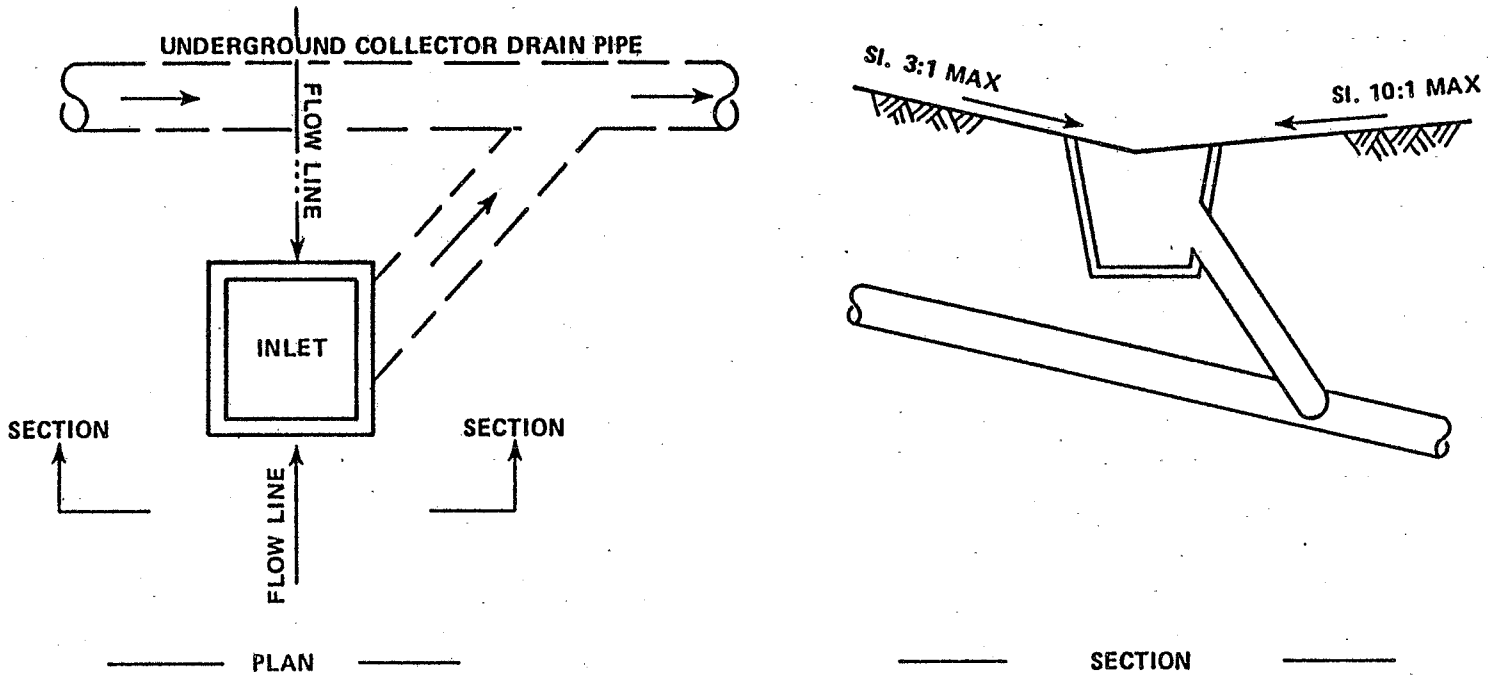

SOURCE: SWEC based on Colony Development Operation, March 1980

FIGURE 5.3-4 RUNOFF COLLECTION AND CHANNELING

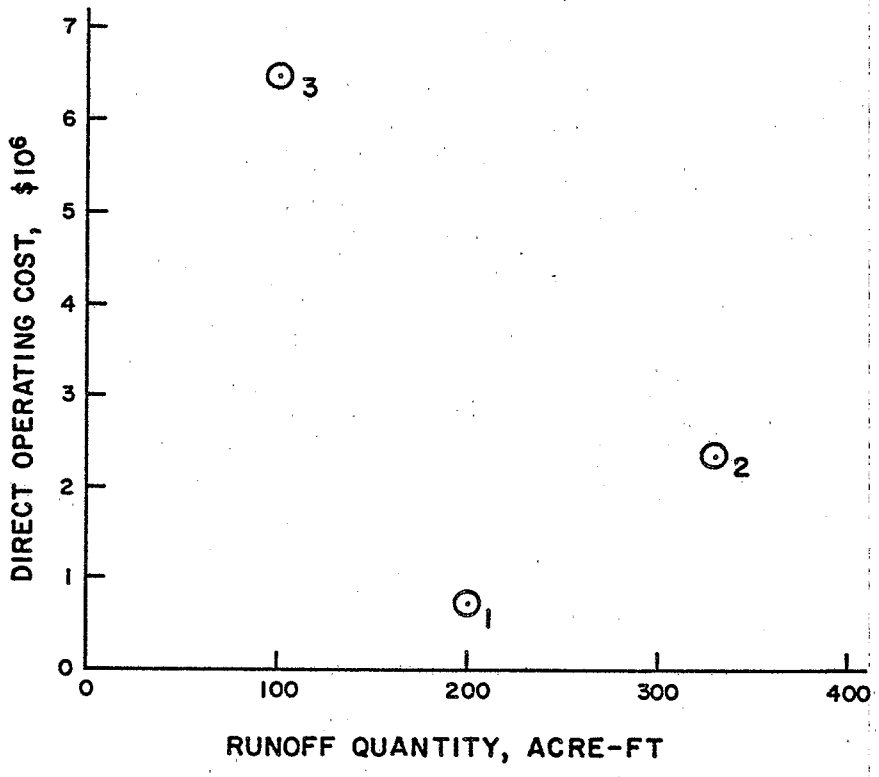

NOTES:

Example 1 utilizes shaped benches as unlined ditches for lateral runoff conveyance.

Examples 2 & 3 utilize split corrugated metal pipe to line ditches for lateral runoff conveyance.

Examples 1 & 2 utilize buried corrugated metal pipe and energy dissipators for vertical runoff conveyance.

Example 3 utilizes a concrete flume with stilling basin for vertical runoff conveyance.

Example 1 is specific to the MIS-Lurgi case studies.

The costs indicated are cumulative for the project life.

See Section 6.2.3 for details on the solid waste management cost methodology.

SOURCE: SWEC

FIGURE 5.3-5 RUNOFF COLLECTION COSTS

depending upon the nature of the impounded material. If a liner is needed, it would be protected from wave action, as necessary, using rip-rap, a sand layer, soil cement or similar materials. Since the pond would be located at the base of the landfill, it might also be used to collect the leachate from the fill.

Cost data for four examples of runoff/leachate collection ponds are presented in Figures 5.3-6 and 5.3-7. Figure 5.3-6 presents the total cost of the embankment and liner as a function of the construction material quantities used in each case, while Figure 5.3-7 isolates the cost of the liner as a function of the liner material quantity only. Examples 1, 2 and 3 utilized compacted processed shale as the liner, while Example 4 used Mancos Shale as the liner. The relatively high cost of using an off-tract material (Example 4) is evident in the figures. The cost increase is incurred due to the source development, processing and hauling of Mancos Shale. Slight cost differences may be observed between similar systems, and these can be attributed to site-specific features, such as the arrangement and configuration of the embankments and ponds.

5.3.3 Subsurface Hydrology Control Technologies

The technologies and practices in the area of subsurface hydrology involve the handling of groundwater seepage under a landfill to prevent infiltration of the pile and the control of water from the pile to prevent contamination of the groundwater. The technologies, as summarized in Figure 5.3-8, are applicable to a surface landfill, and their key features are presented in Table 5.3-4. Detailed descriptions of the technologies, along with cost information, are presented below.

Liners and Covers--

A liner is essentially a material with low water permeability that is installed at the bottom of a landfill or pond. Its purpose is to prevent the contaminated waters from the wastes from mixing with the groundwater. It also prevents groundwater from infiltrating the bottom of the landfill.

A cover is also made up of a low-permeability material and it is used as a surface sealer for the landfill. It prevents the runoff from infiltrating the pile, thereby reducing the quantity of the leachate and minimizing stability problems.

There are several materials which can be considered for the liners and covers. Probably the least expensive material would be compacted processed shale. It has the advantage of being readily available at the site. A similar lining could be made of processed shale or clay from off site if the quality of the processed shale from the site is unsuitable; however, these options would be relatively expensive due to the extra handling and hauling costs. There is also a variety of synthetic liners which could be considered. High-density polyethylene, for example, would range upward from a price similar to that for the off-site materials, depending upon the thickness used. This would make it very expensive for use in a processed shale landfill and it may have questionable long-term durability. Another option

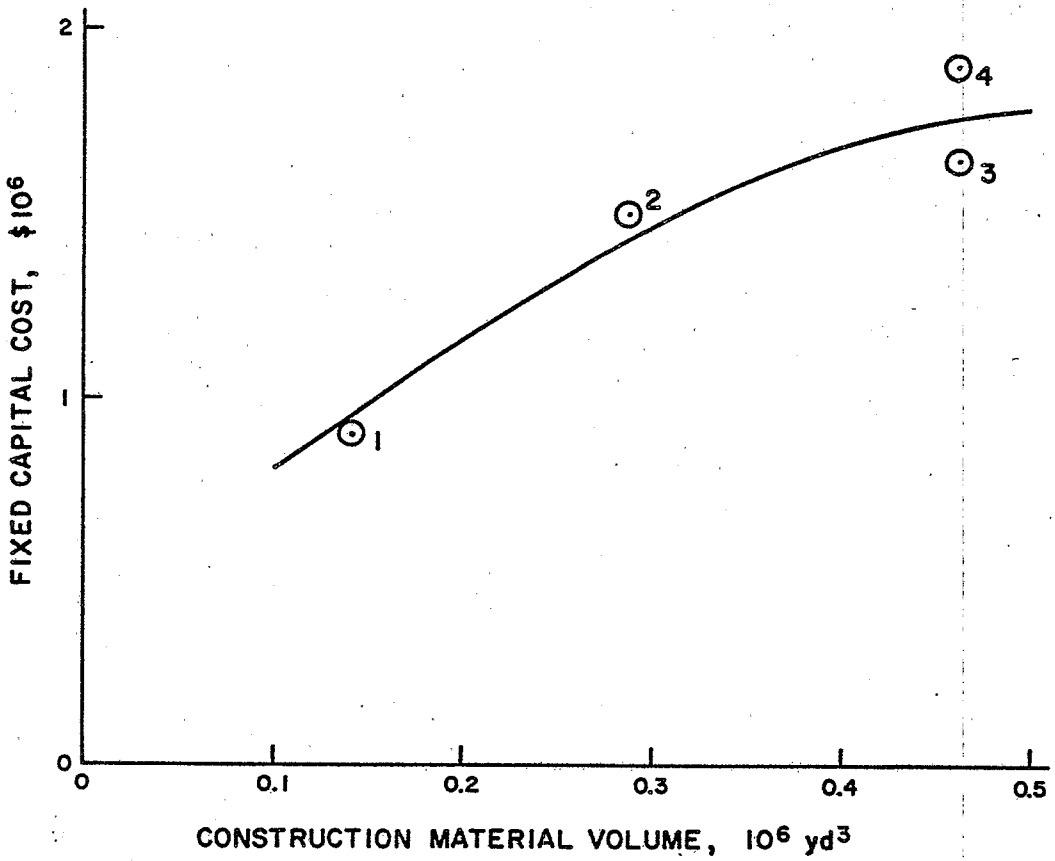

NOTES:

All Examples include cost of embankments and pond liners.

Examples 1, 2 & 3 include pond liners constructed of processed shale.

Example 4 includes a liner constructed of Mancos Shale (off-tract material); cost is increased due to processing and transport.

Example 1 is specific to the MIS-Lurgi case studies.

See Section 6.2.3 for details on the solid waste management cost methodology.

SOURCE: SWEC

FIGURE 5.3-6 RUNOFF/LEACHATE POND COSTS

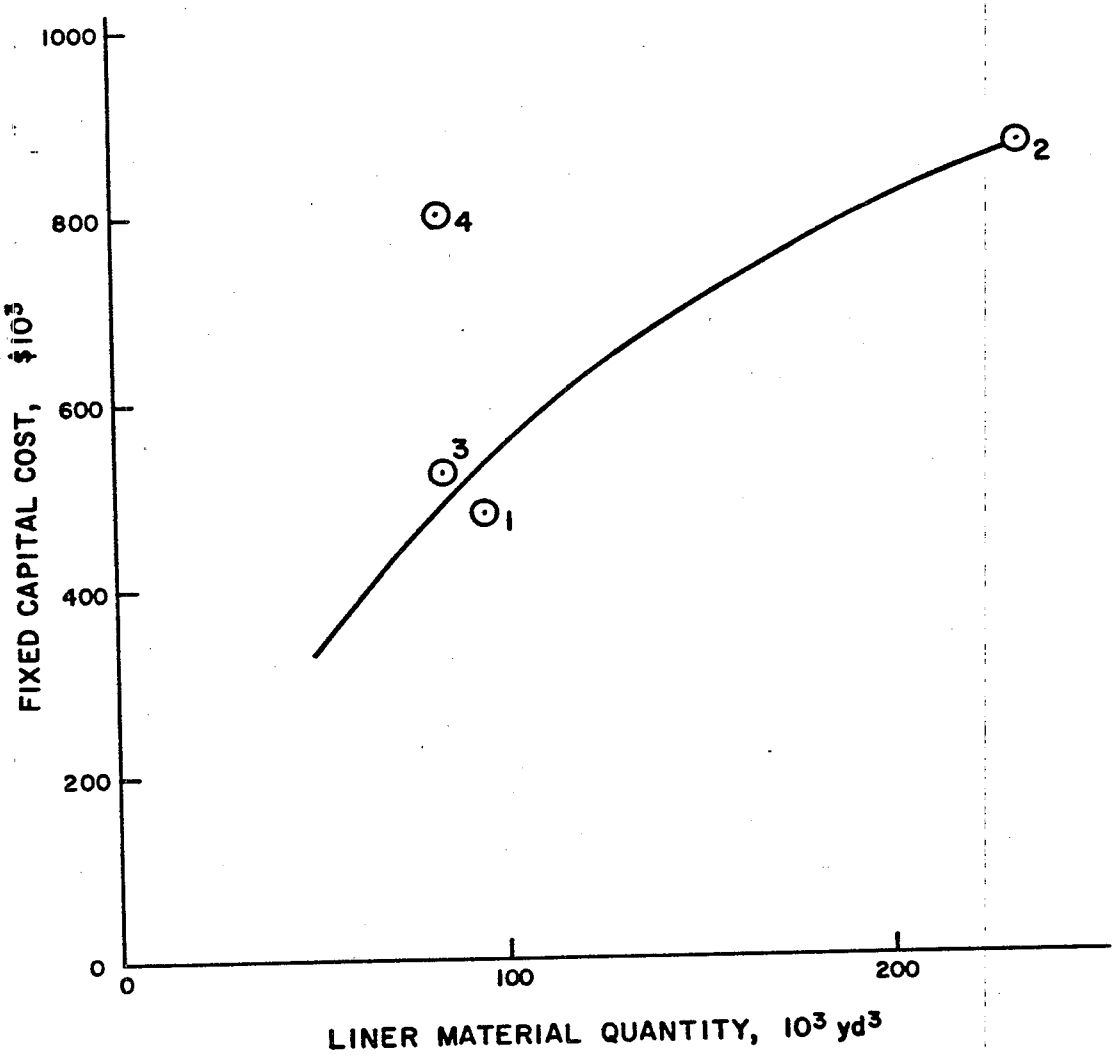

NOTES:

Examples 1, 2 & 3 include liners constructed of processed shale.

Example 4 includes a liner constructed of Mancos Shale (off-tract material); cost is increased due to processing and transport.

Example 1 is specific to the MIS-Lurgi case studies.

See Section 6.2.3 for details on the solid waste management cost methodology.

SOURCE: SWEC

FIGURE 5.3-7 RUNOFF/LEACHATE POND LINER COSTS

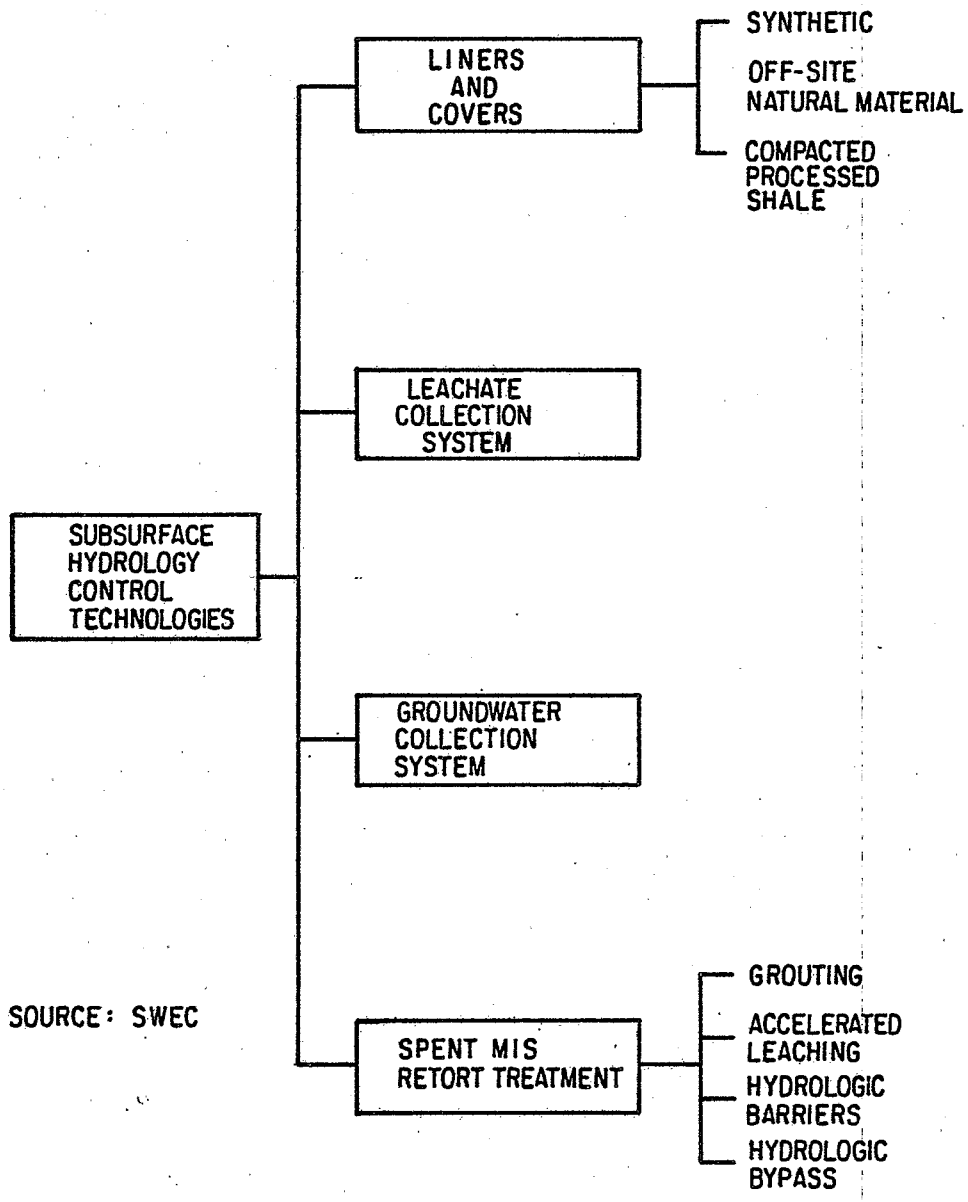

SOURCE: SWEC

FIGURE 5.3-8 SUBSURFACE HYDROLOGY CONTROL TECHNOLOGIES

TABLE 5.3-4. KEY FEATURES OF SUBSURFACE HYDROLOGY CONTROL TECHNOLOGIES

Control Technology	Principle	Purpose	Comments
Liners and Covers	Low permeability layer severely restricts seepage.	Reduce formation of leachate. Prevent contamination of the groundwater by leachate from the fill. Prevent groundwater invasion of the fill, which might produce instability and additional leachate.	
Synthetic			Provide the lowest permeability but have the highest cost. Long-term durability is questionable.
Off-site Natural Material			High cost. Advantage is long-term durability.
Compacted Processed Shale			Lowest cost. Small particles may infiltrate adjacent drains. Advantage is long-term durability.
Leachate Collection System	Collects leachate at the base of the landfill and drains into the pond.	Reduces groundwater contamination by effectively removing the leachate. Prevents loss of fill stability due to saturation.	Collected water may be used for process needs.
Groundwater Collection System	Collects groundwater seepage beneath the landfill and drain.	Prevents loss of fill stability due to buildup of groundwater pressure beneath the liner.	Collected water may be used for process needs.

(Continued)

TABLE 5.3-4 (cont.)

Control Technology	Principle	Purpose	Comments
Spent MIS Retort Treatment		Reduces influence on groundwater. Minimizes subsidence potential.	
Grouting	Fills voids in the spent retorts with low-permeability material.	Reduces groundwater infiltration, hence leaching.	Not demonstrated on a commercial scale.
Accelerated Leaching	Intentionally leach the wastes with several pore volumes of water.	Reduces long-term leaching potential by accelerated leaching during the project life.	Not demonstrated on a commercial scale.
Hydrologic Barriers	Restrict inflow of groundwater by creating an impermeable wall around the spent retort area.	Reduce groundwater infiltration, hence leaching.	Not a demonstrated technology. May not be effective if the retorts are situated in the aquifer flow.
Hydrologic Bypass	Diverts the groundwater flow around the spent retort area; e.g., dewater the aquifers upstream of the area and reinject downstream of the area.	Reduces groundwater infiltration, hence leaching.	May not be effective for stagnant aquifers as reinjected water may flow toward the retorts instead of away from them. Technology not demonstrated for the intended purpose.

Source: SWEC.

that could be considered, particularly for a hazardous waste lagoon, is simply a combination of a synthetic liner with one of the other liners mentioned above.

Linings made of natural materials will dry and crack if they are left exposed to the weathering elements for long periods. Therefore, if a pond is not expected to remain at a relatively consistent level, a synthetic liner might be considered. Hazardous waste lagoons sometimes have double liners; however, the catchment and evaporation ponds presumably will need only one liner or no liner since they will not contain hazardous materials. If a combination of two liners is used, the synthetic liner may be placed above the natural material liner to prevent its drying and cracking. In cases where a synthetic liner is used, it should be covered by a layer of sand or gravel to protect it from traffic and wave action. Also, because of the weight of the fill and because the fill may be placed above an underground mine, the liner must accommodate a certain amount of subsidence and stretching and still function properly.

The cost of liners and covers depends on the quantity and type of material used. Figure 5.3-9 presents the costs for three separate liner and cover systems. Examples 1 and 2 assumed the use of highly compacted processed shale for construction of the liners, while Example 3 assumed the use of Mancos Shale. The compacted processed shale represents the lowest material cost option, while Mancos Shale is a more expensive natural material since it has associated source development, processing and hauling costs. The cost curve in the figure may be used to obtain an "order-of-magnitude" estimate of liner cost utilizing highly compacted processed shale as the construction material. The estimated cost for other liner materials would fall above this curve to a degree which is dependent on the source development, processing, and hauling costs associated with delivering these materials to the disposal site.

Leachate Collection System--

The purpose of a leachate collection system is to collect water which infiltrates a landfill and drain it efficiently in order to prevent the saturation of the landfill and contamination of groundwater beneath the waste pile, as well as to facilitate handling of the leachate.

Leachate collection systems typically consist of blankets, or zones, of highly pervious sand and gravel. In some cases this is augmented with embedded perforated pipe to increase the capacity, and it may also include collector ditches where the system emerges onto a broad level area. The sand or gravel layer would be located just above the bottom liner and it may be wrapped in filter fabric or surrounded by carefully graded sand filters to prevent infiltration by the processed shale particles. In either case, the collection system should be designed so that movement and settlement do not result in discontinuity of the gravel layer or impede drainage to the collection or evaporation ponds.

The costs for four distinct leachate collection systems were estimated and these are presented in Figure 5.3-10. In Examples 1 and 2, due to the

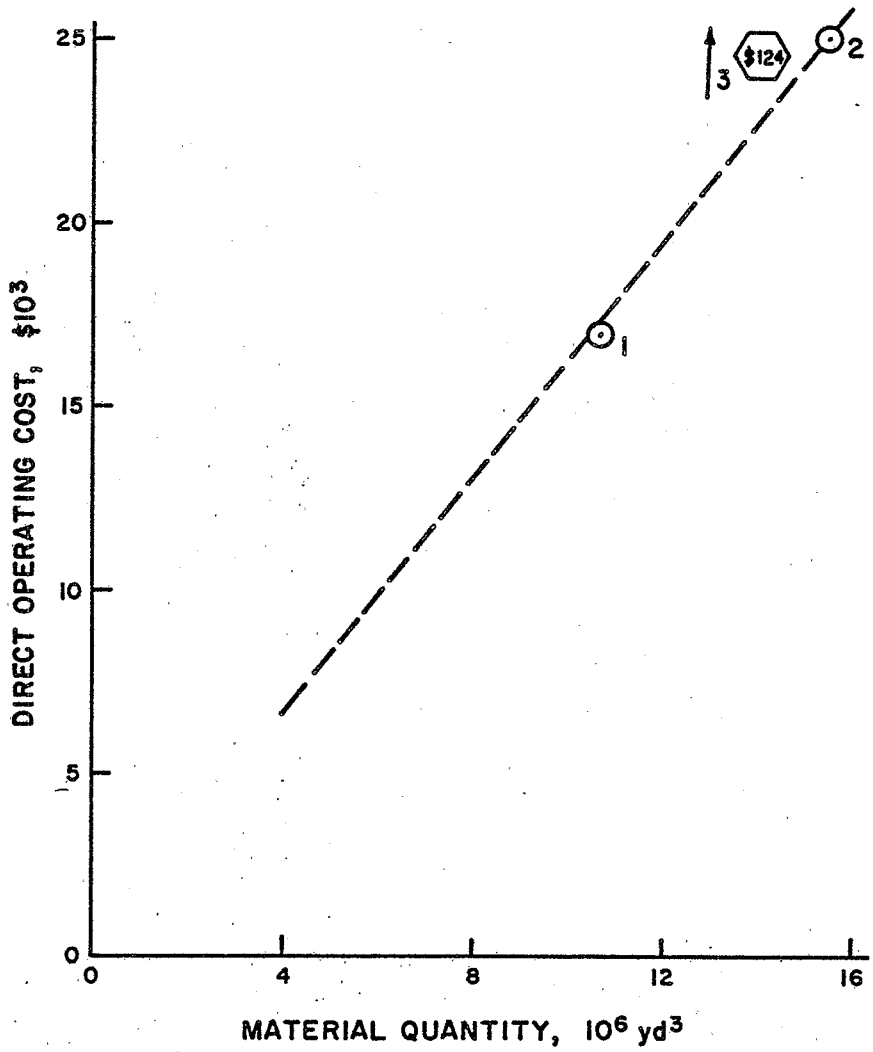

NOTES:

Examples 1 & 2 utilize 3 feet of highly compacted processed shale for liner material.

Example 3 utilizes 3 feet of compacted Mancos Shale (off-tract material) for liner material; cost of processing and hauling this material makes this option more expensive than the others.

The costs indicated are cumulative for the project life.

See Section 6.2.3 for details on the solid waste management cost methodology.

SOURCE: SWEC

FIGURE 5.3-9 LINER COSTS

valley shape of the disposal site, only the drain material was necessary for the collection system. The leachate in these two cases was drained in the runoff/leachate collection pond located downstream from the landfill. In Example 3, a toe ditch was necessary to collect the leachate due to the presence of the broad valley area at the toe of the landfill. The ditch was then drained into the common runoff/leachate collection pond. Example 4 also required a toe ditch which was drained into a leachate collection pond, while the runoff was impounded separately in evaporation ponds on the waste pile surface. Examples 3 and 4 required the same drainage material quantity. The cost difference between the two examples is due to the inclusion of a separate collection pond in Example 4. Data point 5 on the figure represents the cost of drainage material only for Examples 3 and 4. The cost of the toe ditch may be obtained by subtracting data point 5 from 4.

The costs for similar systems should be proportional to the volume of drainage material used, but slight deviations may be encountered due to the site-specific conditions.

Groundwater Collection System--

The purpose of a groundwater collection system is to relieve pressure from the seeps and springs beneath a landfill. This situation is most likely in the cases of cross-valley or head-of-valley landfills. The system will be essentially identical to the leachate collection system except it would be below the bottom liner rather than above it.

Groundwater collection systems typically consist of blankets or zones of pervious sand and gravel drained beyond the perimeter of the landfill. This may be augmented with embedded perforated pipe to increase capacity and with collector ditches. The sand or gravel layer would be lined as necessary with filter fabric or surrounded by properly graded sand filters to prevent infiltration of smaller particles from adjacent materials. The system must also be designed to maintain its continuity despite possible subsidence or settlement of the landfill.

The costs of two groundwater collection systems were estimated and these are plotted in Figure 5.3-11. Both systems used gravel blankets under the pile to collect the groundwater seepage. In Example 2 the gravel blankets were used only above the seeps and springs, while in Example 1 an extensive network of the blankets was considered, resulting in a higher cost. The cost of the collection system should be proportional to the quantity of the drainage material used.

Spent MIS Retort Treatment--

The object of this technology is to treat the spent MIS retorts such that the interaction between the retorted material and groundwater is minimized and the potential for subsidence is reduced. Several technologies for achieving this have been proposed.

Grouting. This technology entails the filling of fractures and void space in the spent retorts by pumping in a grout slurry. The material used

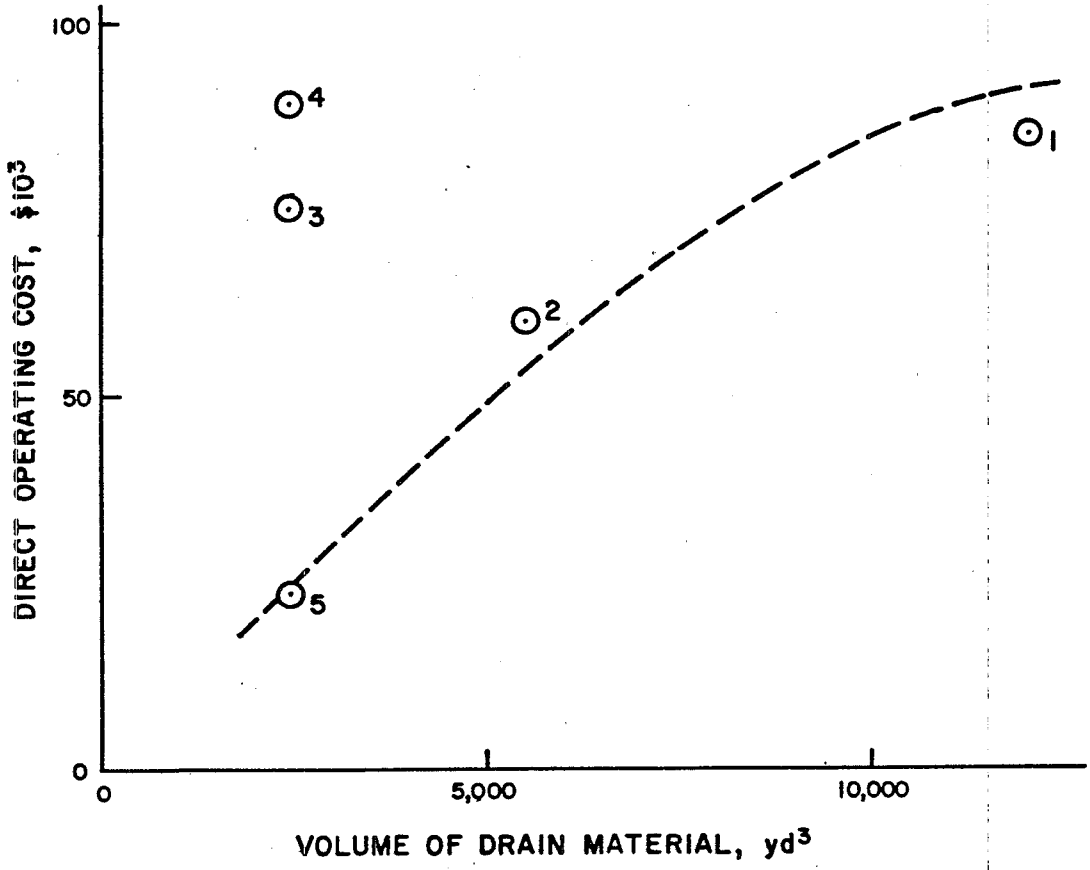

NOTES:

Examples 1 & 2 require only drain material due to the valley shape; leachate containment is performed by the contaminated runoff catchment pond of which the leachate is a negligible component.

Example 3 includes cost of toe ditch for collection due to broad valley at waste pile toe; containment is also by the contaminated runoff catchment pond.

Example 4 includes toe ditch collection and separate containment pond because, in this case, contaminated runoff is contained in evaporation ponds on the waste pile surface.

Example 5 includes only the drain material cost of Examples 3 & 4.

The costs indicated are cumulative for the project life.

See Section 6.2.3 for details on the solid waste management cost methodology.

SOURCE: SWEC

FIGURE 5.3-10 LEACHATE COLLECTION COSTS

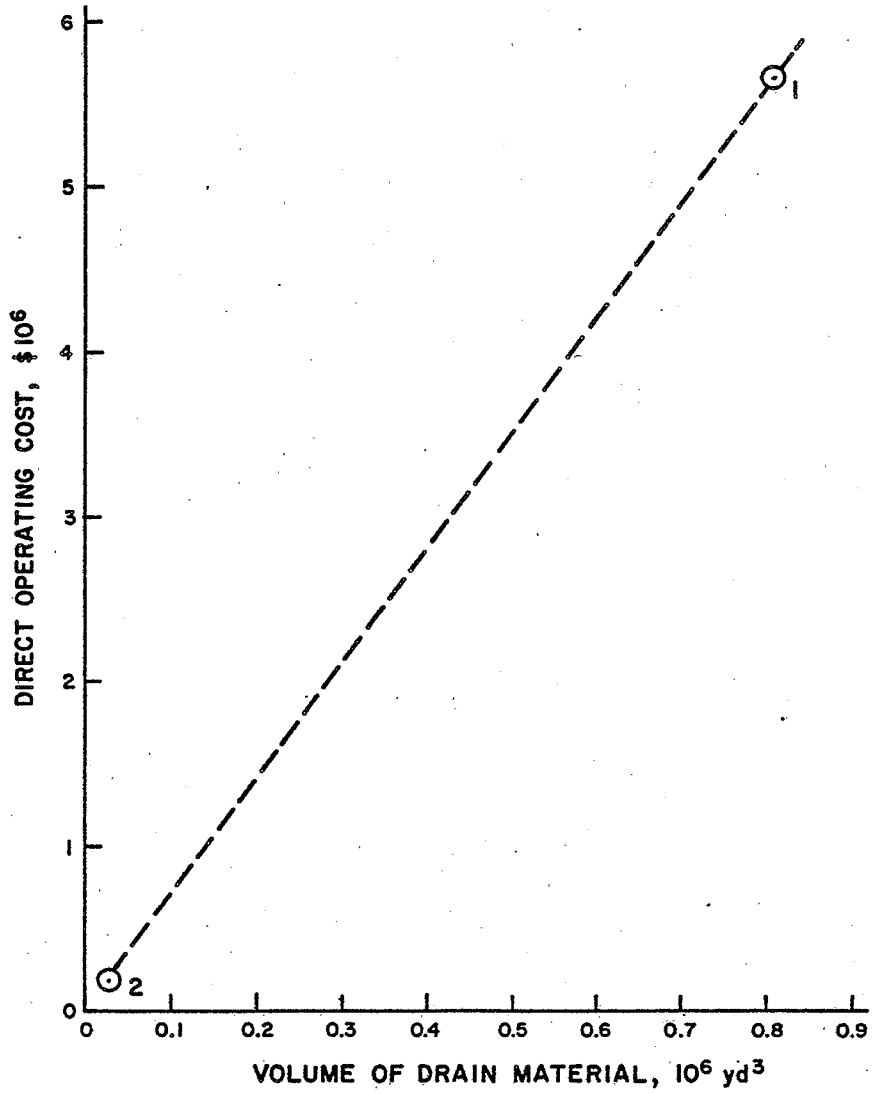

NOTES:

Examples 1 & 2 consist of gravel blankets for collection of groundwater from springs and seeps; extent of blankets dictated by the existence and extent of such conditions.

The costs indicated are cumulative for the project life.

See Section 6.2.3 for details on the solid waste management cost methodology.

SOURCE: SWEC

FIGURE 5.3-11 GROUNDWATER COLLECTION COSTS

in grouting should penetrate the interspace with ease and should result in low permeability throughout the retort volume. Some preliminary studies indicate that this technology may be an effective means of treating the spent retorts (Mallon, January 1980). Fine processed shale alone or in combination with lime seems to yield an acceptable grout material (Persoff and Mehta, January 1980).

Advantages of slurry grouting include isolation of the waste material from the groundwater and strengthening of the material with a resulting decrease in the subsidence potential. The main disadvantage of the technology is that it is not yet developed for application to MIS retorts. According to some preliminary estimates, the cost of grouting may range from $2.70/bbl of oil for Tract C-a to $3.80/bbl for Tract C-b (Persoff and Fox, April 1979).

Accelerated leaching. Intentional, accelerated leaching of the waste material and treatment of the leachate may be carried out during the project life to avoid long-term leaching problems. This would entail pumping water through the spent retorts, collecting and treating it, and then reusing the treated water. A mass saturated with water will remain in the retorts, the consequences of which are not known. Additionally, the materials removed during treatment would require proper disposal. The cost of collecting six pore volumes of leachate and treating it by reverse osmosis and carbon adsorption has been estimated to be about $1.20/bbl of oil (Persoff and Fox, April 1979).

Hydrologic barriers. This technology would consist of constructing pillars, or grout curtains, around the spent retort area to reduce the infiltration of the groundwater into the retort field. The approach is not anticipated to be completely effective as the retorts are likely to intersect the existing aquifers. In concept, the costs of constructing grout curtains for Tracts C-a and C-b are estimated to be $1.70 and $2.80 per barrel of oil, respectively (Persoff and Fox, April 1979).

Hydrologic bypass. Diverting the existent aquifer flow around the retort area by first dewatering the aquifers and then reinjecting the water away from the retort area has been conceptualized. This type of system would need to remain in operation indefinitely. Furthermore, the effectiveness of the approach for stagnant water bodies may be uncertain. Preliminary cost estimates for bypass systems for Tracts C-a and C-b range from 25 cents to 50 cents per barrel of oil, respectively (Persoff and Fox, April 1979).

5.3.4 Surface Stabilization Technologies

The activities and technologies in the area of surface stabilization involve the treatment of the disturbed land surface and the problems associated with the disposal and reclamation of the waste material. These technologies are outlined in Figure 5.3-12 and their key features are presented in Table 5.3-5.

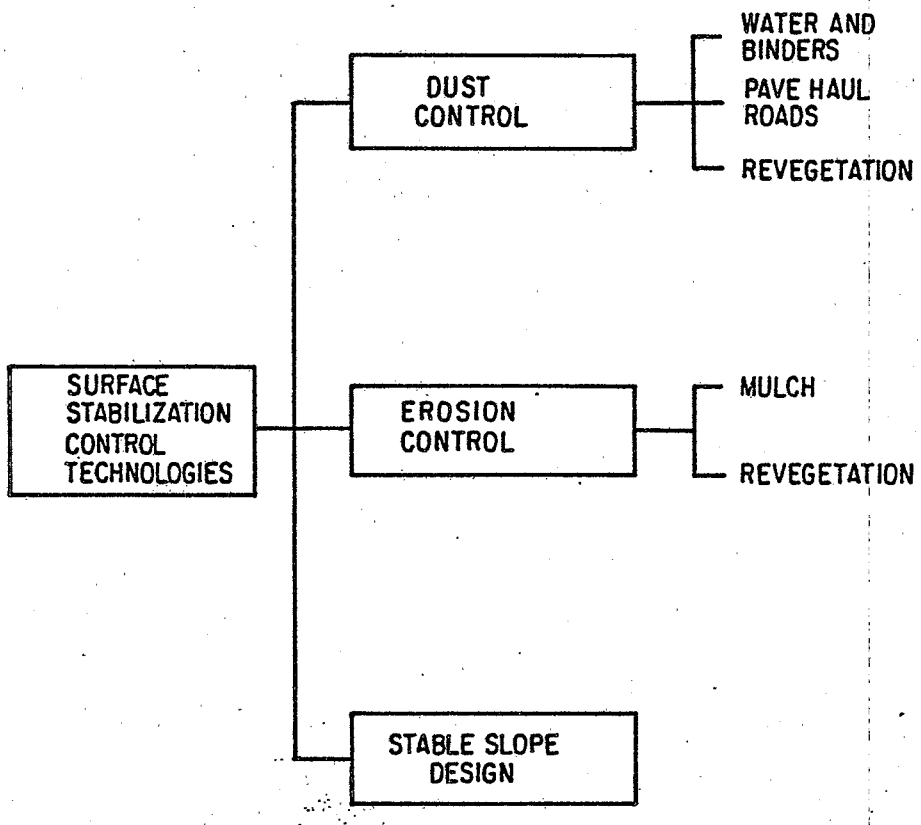

SOURCE: SWEC

FIGURE 5.3-12 SURFACE STABILIZATION TECHNOLOGIES

TABLE 5.3-5. KEY FEATURES OF SURFACE STABILIZATION TECHNOLOGIES

Control Technology	Principle	Purpose	Comments
Dust Control		Prevents or limits dust pollution from wind blowing across exposed surfaces or from vehicular traffic.	
Water and Binders	Fluid sprayed on the surface binds the fine particles together.		Well developed technology that is commonly used in mining operations.
Pave Haul Roads	A hard surface on the haul road prevents generation of dust by vehicular traffic.		Should improve traffic conditions on the road.
Revegetation	Vegetation prevents dust caused by wind.		Not useful in areas with any equipment traffic or where the surface is being disturbed by other activities.
Erosion Control		Simplifies reclamation, prevents blockage of the drains, and prevents contamination of surface waters by eroded material.	
Mulch	Various materials are placed on the slope to limit erosion.		Quick and easy to accomplish but is only a temporary measure.
Revegetation	Plant growth is started on the slope to limit erosion.		Permanent control but slow to achieve.
Stable Slope Design	Design slope to minimize stability problems and maintenance.	Makes erosion control, revegetation, and drainage easier. Restricts waste material to a definite, predefined area.	

Source: SWEC.

Dust Control--

The purpose of dust suppression is to limit pollution from airborne dust, particularly during the placement of the waste material in a fill. Dust suppression can be accomplished by spraying the haul roads and fill surface with water or a combination of water and a chemical binder. Haul roads could, alternatively, be paved.

Use of water alone for dust suppression would necessitate repeated applications, often more than one per day, to be effective. Water with a chemical binder should necessitate only a few applications to a given surface to stabilize it for a year or more unless it receives heavy traffic. Finally, vegetation would provide perhaps the most permanent means of dust control, but this would not be practical except on surfaces which would not be disturbed for a number of years.

The dust suppression technology assumed in developing the cost data for two examples consisted of routine spraying of the processed shale pile with water and additives to minimize the dust generated due to the wind and the waste hauling and placement activities. Depending on the processed shale characteristics, this operation could either be continuous or intermittent. The cost curve in Figure 5.3-13 is based on the assumption that both the manpower and equipment operation requirements are continuous. Theoretically, these requirements could differ depending on the rate of waste production and the surface area of the particular waste pile; however, both cases estimated were assumed to be equivalent in this respect.

Erosion Control--

The purpose of erosion control is to keep the waste material in place so that the surface drains remain free flowing, the slopes remain stable, eroded material does not pollute surface streams, and reclamation and revegetation efforts are not hampered. Some means of limiting erosion include contouring the surface with short and gentle slopes, providing for drainage of the slopes at frequent intervals, using mulch or filter fabric to dampen the impact of water flow, and revegetating the completed faces. Of these measures, grading and drainage are essential, take effect immediately, and last as long as they are maintained. Mulch or filter fabric also provide a quick control, but they are of a temporary nature. Revegetation provides a permanent control, but it is generally slower to take effect.

A major consideration in planning erosion control measures is the severity of rainfall in the area. A large proportion of the water from a high-intensity rainfall would run off the surface, thus increasing the erosion.

Reclamation and revegetation consist of placing a subsoil and topsoil strata of sufficient thickness to support vegetation, and then seeding the disposal area with native or introduced species. The greatest contributor to the magnitude of cost for this control technology is the thickness of the soil strata and the costs associated with the delivered soil material, i.e., the source development, processing and hauling costs. Soil and subsoil

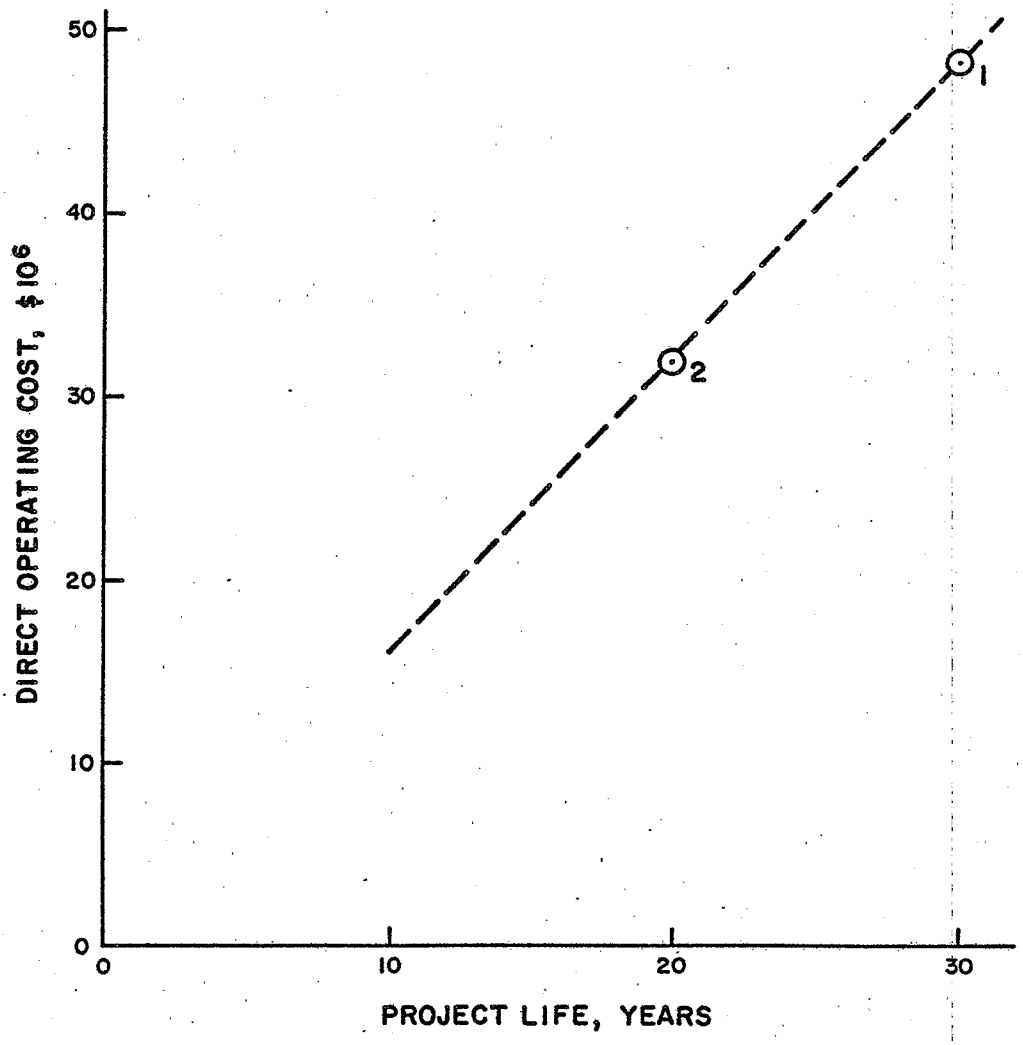

NOTES:

Example 1 assumes a 30-year project life, while Example 2 assumes a 20-year life.

The MIS-Lurgi case studies have a project life of 30 years.

The costs indicated are cumulative for the project life.

See Section 6.2.3 for details on the solid waste management cost methodology.

SOURCE: SWEC

FIGURE 5.3-13 DUST CONTROL COSTS

stripped from the disposal site may not be available in sufficient quantity to meet the reclamation needs. The cost curves presented in Figure 5.3-14 illustrate five examples. Examples 1 and 5 included 2 feet of subsoil (sand-gravel material) and 30 inches of topsoil, both of which were brought in from off-site sources and thus had additional costs involved. Examples 2 and 3 also used the same thicknesses, but the soils were available on the site. Example 4 used no subsoil and only 6 inches of topsoil which was available on the site; therefore, additional material costs were not involved. All examples included the cost of revegetation. It is evident from the figure that the cost of erosion control can vary significantly depending on the factors considered; however, in any category, the costs are proportional to the area reclaimed and revegetated.

Stable Slope Design--

The purpose of designing the slopes to be stable under prevailing conditions is to minimize the maintenance of the landfill and to avoid hampering of the reclamation and revegetation efforts. The techniques used in designing stable slopes are a well developed part of soils engineering. To arrive at the most advantageous slope design, other factors besides basic stability, such as erosion, ease of placement, reclamation and revegetation, must be considered. However, the physical characteristics of the waste material will dictate a limiting slope angle. The costs of achieving a stable slope design are incidental to the placement and revegetation of the fill material; hence, additional costs are not involved.

5.3.5 Hazardous Waste Control Technologies

The control of hazardous waste involves its permanent impoundment in a permitted disposal facility. This facility may be built on the project site or the wastes may be sent to an existent, off-site permitted facility. These options are outlined in Figure 5.3-15 and their key features are presented in Table 5.3-6.

On-site Disposal--

Hazardous waste lagoons are a well developed and accepted approach to solid waste management. They are actually an integration of several control technologies discussed in Sections 5.3.2, 5.3.3 and 5.3.4. Some of the included technologies would be an embankment surrounding the lagoon, a runon diversion system, one or two bottom liners, a surface cover, reclamation and revegetation, and monitoring.

There are certain advantages to building a hazardous waste facility on site. This option automatically assumes segregation of the hazardous and nonhazardous wastes and, hence, their separate disposal. An advantage of this approach is that much of the material necessary for the lagoon would be available on site or it already would have been brought in for the nonhazardous waste landfill. Furthermore, transport of the wastes beyond the property boundaries will not be required. A significant advantage may be that the producer of the hazardous wastes (the oil shale developer) will have complete control over the disposal of the wastes.

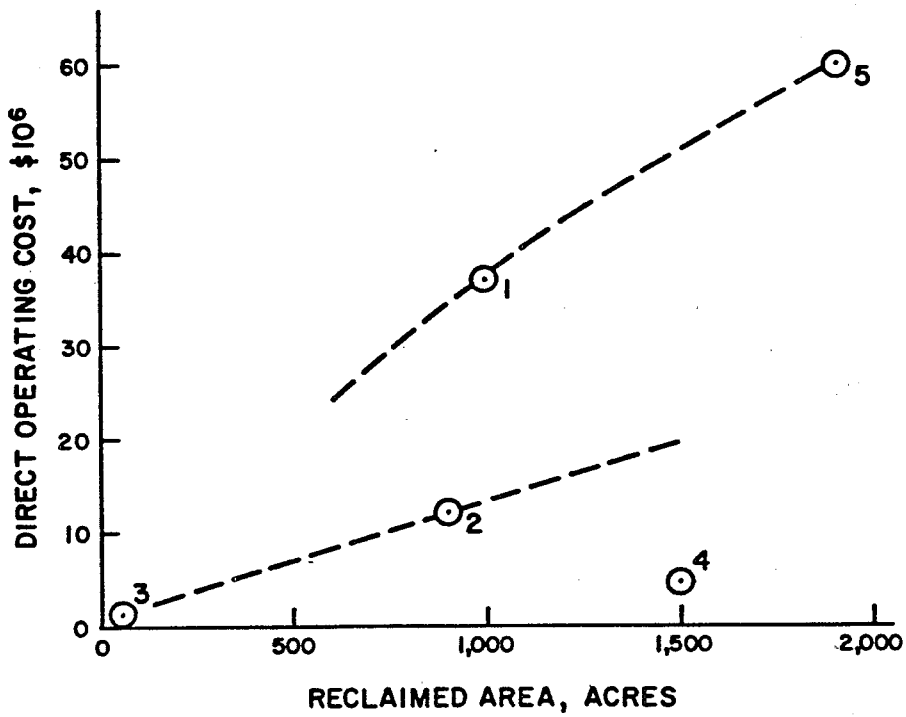

NOTES:

Examples 1 & 5 include 2 feet of subsoil and 30 inches of topsoil, both obtained off site.

Examples 2 & 3 include 2 feet of subsoil and 30 inches of topsoil obtained on site.

Example 4 includes no subsoil and only 6 inches of topsoil obtained on site.

Example 1 is specific to the MIS-Lurgi case studies, except the Cathedral Bluffs proposal includes 12 inches of soil cover.

The costs indicated are cumulative for the project life.

See Section 6.2.3 for details on the solid waste management cost methodology.

SOURCE: SWEC

FIGURE 5.3-14 RECLAMATION AND REVEGETATION COSTS

326

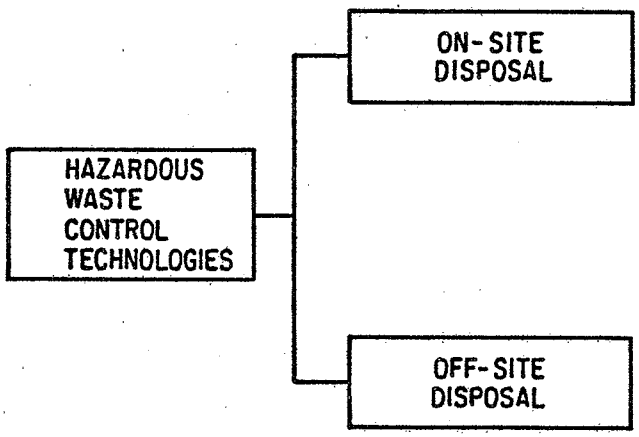

SOURCE: SWEC

FIGURE 5.3-15 HAZARDOUS WASTE CONTROL TECHNOLOGIES

TABLE 5.3-6. KEY FEATURES OF HAZARDOUS WASTE CONTROL TECHNOLOGIES

Control Technology	Principle	Purpose	Comments
On-site Disposal	Dispose of hazardous wastes in a lagoon established on site.	Dispose of hazardous wastes produced by processing of oil shales.	The oil shale developer has complete control of hazardous wastes produced by the facility.
Off-site Disposal	Establish lagoon off site or pay for disposal in existing permitted facility.	Dispose of hazardous wastes produced by processing of oil shales.	Provides a broader selection of sites, although the wastes must be transported. Potentially less involvement with the wastes.

Source: SWEC.

There are also certain disadvantages to on-site disposal of the hazardous wastes. To be efficient in evaporating the liquids and consolidating the sludge, the lagoon should be located preferably on a level site, which may not be readily available. Rugged, uneven terrain would increase the cost of site preparation, runon control and reclamation. There is also a possibility that the lagoon may interfere with other ongoing activities and the resource recovery.

Off-site Disposal--

Off-site existent facility. This would be an already existing facility where the wastes can be disposed of on an "as needed" basis. A payment is required for every shipment, but the cost may be lower than that of building and maintaining a new facility. Also, a significant amount of time and effort involved in the licensing, design, and construction of a new facility can be saved. The capacity and distance of the existent facility must also be considered in selecting the disposal approach.

SECTION 6

POLLUTION CONTROL COSTS

This section provides an analysis of estimated pollution control costs for the MIS-Lurgi case studies analyzed in this manual (see Sections 2 and 3 for descriptions of these case studies). Section 6.1 presents fixed capital and direct annual operating costs for each control and explains how they were developed. These costs are referred to as the "engineering costs."

Section 6.2 explains the cost analysis methodology used to develop the total annual and per-barrel pollution control costs. These costs combine capital and annual operating costs, allow for taxes, and incorporate a return on investment. This is an approach similar to that which a private developer might use to determine costs or assess the economic feasibility of a project. Section 6.2 also details the economic assumptions that are incorporated into the calculation of total annual control costs.

Section 6.3 presents estimated total annual control costs and per-barrel costs for each control using a set of standard economic assumptions. These costs are assembled into total per-barrel costs for air and water pollution control for the case studies examined in this manual. This section also examines the sensitivity of the per-barrel control costs to a series of changes in the engineering costs and economic assumptions.

Section 6.4 provides more detailed information supporting Sections 6.1, 6.2 and 6.3. Section 6.4.1 provides the algorithms that were used to determine total annual control costs and per-barrel control costs, and Sections 6.4.2 and 6.4.3 provide examples, respectively, of fixed charge rate calculations and cost levelizing calculations.

Section 6 uses a large number of cost and economic terms. The interrelationships among the more important of these terms is illustrated in Figure 6.0-1. Each term is explained when it is first used in the text, but the reader may find it helpful to use this figure to provide an overview while reading the various sections. In addition, Table 6.2-4, presented later in this section, indicates the estimated relative magnitude of the components of per-barrel control cost for a typical major pollution control.

6.1 ENGINEERING COST DATA

6.1.1 Bases of Engineering Cost Data

Throughout this manual a distinction is made between capital costs and annual operating costs. There are two types of capital cost, fixed capital

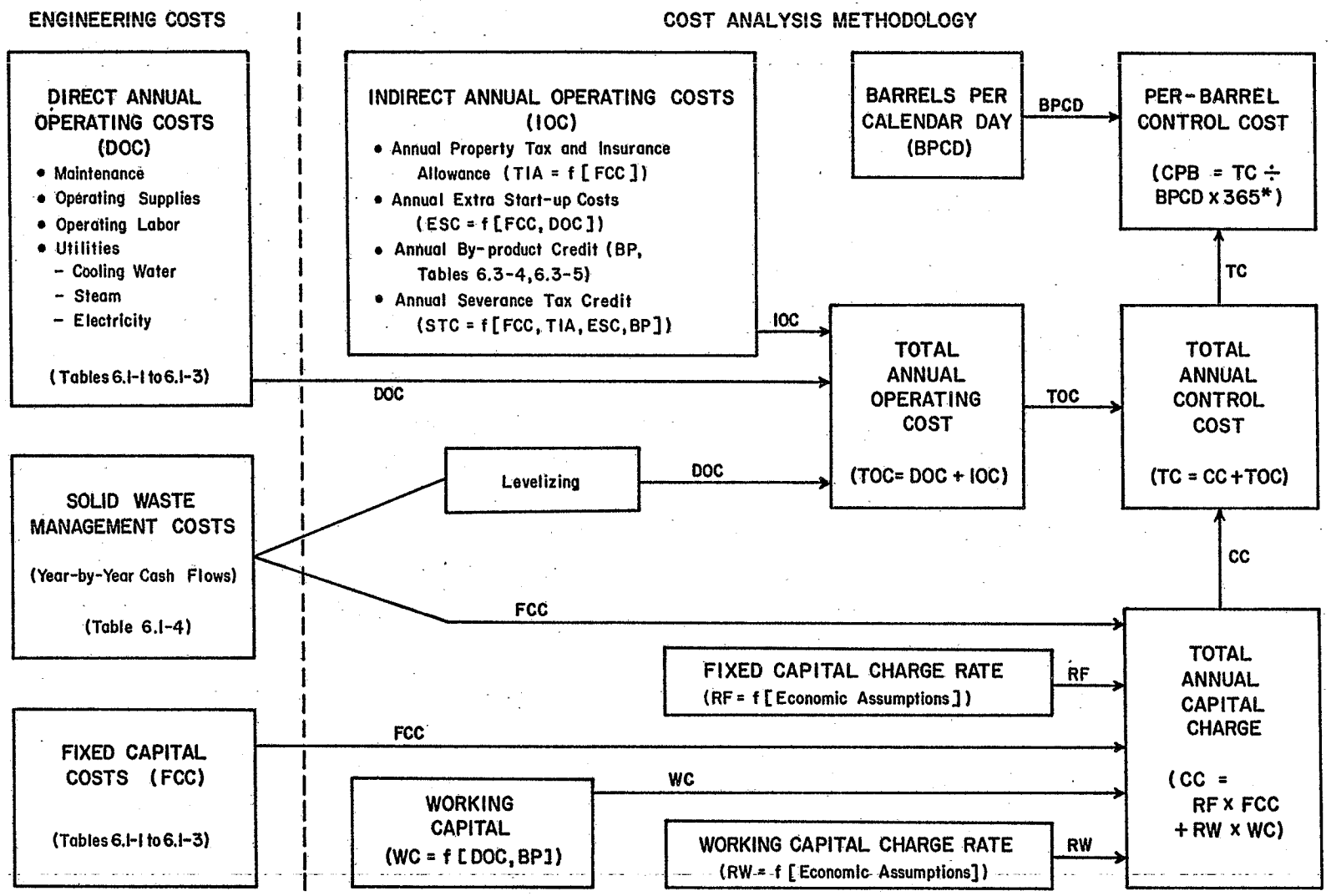

* 365 is the number of days in a year.

Note: f means "a function of"

SOURCE: DRI

FIGURE 6.0-1 INTERRELATIONSHIPS AMONG VARIOUS COST AND ECONOMIC TERMS

and working capital, and two types of annual operating cost, direct and indirect.

Fixed capital is investment in construction and equipment, whereas working capital is money that is required to operate the plant, e.g., that which is tied up in inventories.

Direct annual operating costs include maintenance, operating supplies, operating labor and utilities costs. Indirect annual operating costs comprise additional annual costs, i.e., property tax and insurance, an allowance for extra start-up costs, a credit for severance tax not paid and by-product credits.

Section 6.1 only considers fixed capital costs and direct annual operating costs. Working capital and indirect annual operating costs are considered in Section 6.2.

Assumptions Used to Develop Costs--

All costs are expressed in mid-1980 constant dollars. The following data apply to air and water pollution control costs. Solid waste management costs were developed on the basis that these activities are contracted out, since they are all construction-type activities (see discussion later in this subsection).

Fixed capital costs. Fixed capital costs are of the "preliminary estimate" category. Physical plant costs for air emission controls were developed by Stone and Webster Engineering Corporation (SWEC) and for water pollution controls by Water Purification Associates (WPA). Actual vendor quotes were used for major items of equipment; costs for other equipment were obtained from data files maintained by SWEC and WPA. Total physical plant costs were developed from the equipment costs by adding appropriate allowances for the following:

- Site preparation, excavation and foundations
- Concrete and rebar
- Support structures
- Piping, ductwork, joints, valves, dampers, etc.
- Duct and pipe insulation
- Pumps and blowers
- Electrical
- Instrumentation and controls
- Monitoring equipment
- Erection and commissioning
- Painting
- Buildings.

To arrive at the total fixed capital cost, the following factors were added to the physical plant cost:

Engineering and construction overhead:	25% of physical plant cost.
Contractor's fee:	3% of bare module cost (physical plant cost plus engineering and construction overhead).
Contingency:	20% of bare module cost.

For an explanation of this method of developing estimates of fixed capital costs, see Uhl (June 1979). A 20% contingency factor was chosen because there are only pilot plant data for the MIS and Lurgi retorting processes.

It is considered that the accuracy of these cost estimates is within ±30 percent. Although the accuracy of a preliminary fixed capital cost estimate is normally regarded as ±20 percent, uncertainties about stream magnitudes and composition decrease the accuracy of these estimates to ±30 percent.

Direct annual operating costs. There are two components which make up the total annual operating cost. The direct annual operating cost can be regarded as the basic (or engineering) cost, while calculation of the indirect annual operating cost makes some adjustments to this cost. By-product credits are included in the indirect annual operating cost. Data on the bases of direct annual operating costs are given below, while the bases of indirect annual operating costs are outlined in Section 6.2.

Direct annual operating costs are made up of the following components:

- Maintenance
- Operating supplies
- Operating labor
- Utilities
  - --Cooling water
  - --Steam
  - --Electricity.

Maintenance costs include maintenance labor and replacement parts, consumables used for maintenance, etc.

Operating supplies are consumable items (such as chemicals) used in the regular operation of the control (as opposed to use for maintenance).

Operating (and maintenance) labor is costed at $30/hr. This is a "loaded" rate, meaning that it incorporates some overhead-type costs to avoid developing them separately. The rate is made up as follows:

A.	Wages for direct labor	$11.00/hr
B.	Fringe benefits (45% of A)	4.95
C.	Field supervision (15% of A + B)	2.40
D.	Overhead (50% of A + B + C)	9.20
E.	General & administrative charge (9% of A + B + C + D)	2.45
	Total	$30.00/hr

In mid-1980, examination of union agreements showed that oil refinery direct operating labor was receiving approximately $10/hr in Colorado. However, it is anticipated that when oil shale development occurs, this will bid up local labor rates, so $11/hr, which was used for the oil shale PCTMs, is a reasonable value. The multiplier factors, used to arrive at the "loaded" labor rate of $30/hr, were suggested by SWEC based on project experience in the western U.S.A.

Cooling water is costed at 11.3 cents per 10^3 gal circulated (3¢/m^3). This is only a charge for the use of the cooling tower. The cost of treating the makeup water is included under water pollution control.

Process steam is charged at $3.00 per million Btu.

Electricity is charged at 3 cents per kW-hr.*

There is no contingency factor in the direct annual operating costs for air and water pollution controls.

Solid Waste Management Costs--

Solid waste management costs in the form of year-by-year cash flows were developed by SWEC using company cost data files. They include the same engineering and construction overhead, contractor's fee, and contingency factor (20%) as the fixed capital costs discussed earlier. The use of a 20% contingency factor is appropriate since all solid waste management costs are

* To be consistent among the three oil shale PCTMs, electricity is charged at 3 cents per kW-hr, whether purchased or generated on site. This figure represents a compromise between the value of electricity sold by plants that will have surplus on-site generated power and the higher cost of power purchased from a utility.

of a construction nature, subject to uncertainties similar to those inherent in fixed capital costs.

6.1.2 Details of Engineering Costs

Tables 6.1-1, 6.1-2, and 6.1-3 present details of the fixed capital and direct annual operating costs for each air and water pollution control. The operating costs relate to a year of normal operation, i.e., full production. For the start-up period, direct annual operating costs are modified to an appropriate level by the cost analysis methodology.

Table 6.1-4 details the solid waste management costs on a year-by-year basis. These costs are allocated to fixed capital or direct annual operating categories in Section 6.2 (Table 6.2-3). Insufficient information was available to develop a complete plan for solid waste management operations. Consequently, the solid waste management costs presented here are for certain items only and do not represent the total pollution control cost for solid waste.

6.2 COST ANALYSIS METHODOLOGY

In the cost analysis, engineering cost data are transformed into two primary measures--the total annual pollution control cost and the control cost per barrel of shale oil. These costs incorporate both capital and annual operating costs and consider project timing, taxes, and the necessary return on investment.

6.2.1 Overview of Cost Analysis Methodology

In private industry, one of the most widely accepted methods of evaluating the economics of a project is the discounted cash flow (DCF) approach. Using this approach, a project must be able to demonstrate that it can produce some established minimum rate of return on investment--known as a "hurdle" rate--to be acceptable.

One method for applying the DCF approach to a complete oil shale project is to determine the selling price which would provide the revenue required to produce a minimum acceptable rate of return (DCF ROR). With this method, a selling price for oil can be established by distributing the required revenue uniformly over every barrel of oil produced.

The same technique can be utilized to determine the total annual and per-barrel costs of pollution control. In practice, pollution control is not a separable aspect of an oil shale project. Consequently, a private developer will require the same DCF ROR on pollution controls as for the entire project.

If the revenue necessary to provide the required DCF ROR for each control (expressed in constant dollars) is distributed uniformly over each barrel of shale oil produced, then this also implies a constant total revenue requirement in each year of normal (full) production. However, in the start-up years, less oil is produced, with the result that the annual revenue

TABLE 6.1-1. DETAILED ENGINEERING COSTS FOR AIR POLLUTION CONTROLS

Case Study	Control (No. of Units)	Control Location	Fixed Capital Cost ($000's)	Components of Direct Annual Operating Cost ($000's/yr)					Total Direct Annual Operating Cost ($000's/yr)
				Maintenance	Operating Supplies	Operating Labor	Steam	Electricity	
Particulate Controls									
A,B	Fabric Filter (2)	Conveyor Transfer Points	52	1	--	--	--	5	6
A,B	Fabric Filter (2)	Conveyor Transfer Points	52	1	--	--	--	5	6
A,B	Fabric Filter (2)	Raw Shale Storage Load-in	125	4	--	--	--	22	26
A,B	Fabric Filter (2)	Raw Shale Storage Load-in	125	4	--	--	--	22	26
A,B	Fabric Filter (1)	Conveyor Transfer Point at Transfer Tower	20	1	--	--	--	2	3
A,B	Fabric Filter (1)	Raw Shale Crushing and Screening	838	25	--	--	--	87	112
A,B	Fabric Filter (1)	Fine Ore Storage Transfer Tower	96	3	--	--	--	20	23
A,B	Fabric Filter (1)	Fine Ore Storage Load-in	13	<1	--	--	--	1	1
A,B	Fabric Filter (2)	Fine Ore Storage Load-out	41	1	--	--	--	4	5
A,B	Water and Foam Sprays	Conveyor Transfer Points, Open Stockpiles, etc.	502	65	589	--	--	151	805
A,B	Electrostatic Precipitators (8)	Lurgi Flue Gas Discharge System	51,800	345	--	--	--	713	1,058
A,B	Venturi Wet Scrubber (1)	Processed Shale Quencher/ Moisturizer	180	4	--	--	--	8	12
Retort Gas Treatment									
B	Stretford (30)*	MIS and Lurgi Gas Recovery and Treatment	203,346	4,265	3,761	9,346	551	590	20,513
A	Flue Gas Desulfurization Scrubbers (10)	Boiler Flue Gas	224,898	4,367	2,356	7,271	9,346	5,767	29,107
A,B	MIS Absorber/Cooler (10)	MIS Gas Recovery and Treatment	203,391	3,949	--	3,635	--	1,390	8,974
Miscellaneous Controls									
A,B	Ammonia Storage Tanks (5)	Phosam-W Ammonia Recovery Unit	2,330	--	--	--	--	--	--
A,B	Catalytic Converters	Diesel Equipment	88	31	--	--	--	--	31
A,B	Floating Roof Oil Storage Tanks (3)	Product Storage	450	--	--	--	--	--	--
A,B	Maintenance	Valves, Pumps, etc.	110	99	--	12	--	--	111

* This line represents a combination of the gas coolers before the MIS-Stretford, the MIS-Stretford, and the Lurgi-Stretford.

Source: DRI estimates based on information provided by SWEC.

TABLE 6.1-2. DETAILED ENGINEERING COSTS FOR WATER POLLUTION CONTROLS, CASE STUDY A

Control	Fixed Capital Cost ($000's)	Components of Direct Annual Operating Cost ($000's/yr)						Total Direct Annual Operating Cost ($000's/yr)
		Maintenance	Operating Supplies	Operating Labor	Cooling Water	Steam	Electricity	
API Oil/Water Separator	2,484	61	--	--	--	--	--	61
Phosam-W Ammonia Recovery Unit	22,994	750	100	355	606	13,000	122	14,933
Retort Water Stripper	9,500	310	125	237	146	2,300	--	3,118
Multimedia Gravity Filtration Unit	6,465	210	--	118	--	--	--	328
Kettle Evaporators	35,235	1,146	--	710	--	37,586	--	39,442
Mine Water Clarifier*	806	26	88	--	--	--	--	114
Cooling Water Treatment*	--	--	86	--	--	--	--	86
Boiler Feedwater Treatment*	155	5	57	66	--	--	--	128
Equalization Pond	68	--	--	--	--	--	--	--
Runoff Oil/Water Separator	47	1	--	--	--	--	--	1
TOTAL	77,754	2,509	456	1,486	752	52,886	122	58,211

* These technologies could be considered as part of the process rather than pollution control.

Source: DRI estimates based on information provided by WPA.

TABLE 6.1-3. DETAILED ENGINEERING COSTS FOR WATER POLLUTION CONTROLS, CASE STUDY B

Control	Fixed Capital Cost ($000's)	Components of Direct Annual Operating Cost ($000's/yr)						Total Direct Annual Operating Cost ($000's/yr)
		Maintenance	Operating Supplies	Operating Labor	Cooling Water	Steam	Electricity	
API Oil/Water Separator	2,484	61	--	--	--	--	--	61
Phosam-W Ammonia Recovery Unit	22,994	750	100	355	606	13,400	122	15,333
Retort Water Stripper	9,500	310	125	237	146	2,300	--	3,118
Multimedia Gravity Filtration Unit	6,465	210	--	118	--	--	--	328
Kettle Evaporators	36,000	1,171	--	710	--	38,309	--	40,190
Mine Water Clarifier*	655	21	61	--	--	--	--	82
Cooling Water Treatment*	--	--	97	--	--	--	--	97
Boiler Feedwater Treatment*	153	5	56	66	--	--	--	127
Equalization Pond	99	--	--	--	--	--	--	--
Runoff Oil/Water Separator	47	1	--	--	--	--	--	1
TOTAL	78,397	2,529	439	1,486	752	54,009	122	59,337

* These technologies could be considered as part of the process rather than pollution control.

Source: DRI estimates based on information provided by WPA.

TABLE 6.1-4. ENGINEERING COSTS AND TIMING OF SOLID WASTE MANAGEMENT ACTIVITIES
(Thousands of Dollars)

Activity	Project Year → 1	2	3	4	5	6	7	8	9	10	11	12	13	14	15	16	17	18	19
SURFACE HYDROLOGY																			
Runon Catchment Dam	351																		
Low-level Outlet	101																		
Runoff Catchment Embankment	153	154	153																
Runoff Collection System	34	34	34	34	34	34	34	34	34	34	34	34	34	34	34	34	34	34	34
SURFACE STABILIZATION																			
Dust Suppression	53	133	239	530	1,054	1,523	1,698	2,112	2,112	2,112	2,112	2,112	2,112	2,112	2,112	2,112	2,112	2,112	2,112
Grubbing, Stripping and Clearing	313	313	313	313	313	313	313	313	313	313	313	313	313	313	313	313	313	313	313
Reclamation and Revegetation																			

Activity	Project Year → 20	21	22	23	24	25	26	27	28	29	30	31	32	33
SURFACE HYDROLOGY														
Runon Catchment Dam														
Low-level Outlet														
Runoff Catchment Embankment														
Runoff Collection System	34	34	34	34	34	34								
SURFACE STABILIZATION														
Dust Suppression	2,112	2,112	2,112	2,112	2,112	2,112	2,112	2,112	2,112	2,112	2,112			
Grubbing, Stripping and Clearing	313	313	313	313	313	313	313	313	313	313	313			
Reclamation and Revegetation						750	1,498	1,498	1,498	4,995	8,488	8,488	8,488	4,244

Note: Year 1 is the first year of operation.

Source: DRI estimates based on information provided by SWEC.

requirement is prorated. Additional costs incurred in the start-up period were spread over all production in order to produce a uniform per-barrel control cost.

The total annual required revenue is utilized to satisfy two major components: the total annual operating cost, and a component that provides the necessary return on investment, called the total annual capital charge. Note that with the DCF approach, profit is based solely on investment; operating costs are passed straight through as one component of the total revenue requirement, without addition of any profit element. This is normal practice for industrial project assessments.

To relate an annual capital charge to the corresponding investment, a "capital charge rate" was used. In practice, there are two types of capital investment: fixed capital (i.e., physical equipment) and working capital (which is nondepreciable investment). The "fixed charge rate" is defined as the proportion of investment in fixed capital that must be recovered in a year of normal production in order to provide the required DCF ROR. The "working capital charge rate" performs a similar function for the working capital. The total annual capital charge for a pollution control is the sum of the annual fixed capital charge and the annual working capital charge.

Fixed charge rates have several economic assumptions embedded in them. Some of these assumptions are common to all pollution controls, i.e., the project life and operating (stream) factors, the income tax rate, and the required DCF ROR. (Although the MIS and Lurgi production schedules build up at different rates in Years 1 through 7, a single aggregate production schedule was used for all cost analysis calculations. This appropriately treats the project as an integrated whole, rather than as two separate parts.)

Other assumptions vary according to the pollution control or group of controls. These are: the timing of the investment in fixed capital, the depreciation period and the investment tax credit details. Consequently, different fixed charge rates are used for different groups of pollution controls.* (These rates, as well as the underlying standard economic assumptions, are listed later in Table 6.2-2.)

The working capital charge rate depends only on the project life and operating factors, the timing of the investment in working capital and the required DCF ROR. Since none of these assumptions varies among controls, the same working capital charge rate is used for each control.

---

* The use of several different fixed charge rates in the same oil shale PCTM may appear complex. However, since the manuals examine several alternatives for pollution control, an accurate evaluation of capital charges is needed. A less accurate approach, such as assuming a single capital expenditure profile for all controls, could conceivably affect the per-barrel cost ranking of pollution control alternatives.

As already indicated, the total annual cost for a control is the sum of the total annual capital charge and the total annual operating cost. The total annual operating cost comprises two components. The "direct annual operating cost" consists of maintenance, operating supplies, operating labor and utilities. The "indirect annual operating cost" comprises an annual allowance for property taxes and insurance, any annual by-product credits, and an allowance for extra start-up costs, i.e., those that are in excess of the direct annual operating cost prorated in accordance with production. It also includes a credit reflecting a reduction in the Colorado severance tax that must be paid, because the cost of each pollution control reduces the severance tax liability.* Extra start-up costs and the severance tax credit are "levelized" to distribute them uniformly over each barrel of shale oil produced since they do not vary in proportion to production. (Levelizing takes a cost that does not vary in proportion to production and finds an economically equivalent cost that has the same time-profile as production [see Sections 6.2.3 and 6.4.3].) To summarize:

Total Annual Control Cost = Annual Fixed Capital Charge + Annual Working Capital Charge + Direct Annual Operating Cost + Indirect Annual Operating Cost.

For air and water pollution controls, direct annual operating costs are specified for a normal year of production and are implicitly prorated during the start-up years. In practice, operating costs during the start-up period will be higher, but this is allowed for via the extra start-up costs discussed in Section 6.2.2. The solid waste management costs are developed in the form of a year-by-year cash flow (see Table 6.1-4) which must be converted into equivalent fixed capital and direct annual operating costs for a full production year (see Section 6.2.3 and Table 6.2-3).

The per-barrel control cost is obtained by dividing the total annual control cost by the production in a normal (full production) year. (Per-barrel operating costs and capital charges can be calculated in the same way.) The detailed algorithms for these calculations and for determining fixed and working capital charge factors are given in Section 6.4.1.

6.2.2 Economic Assumptions Used in Total Cost Calculations

To transform engineering cost data provided in Section 6.1.2 into total annual capital charges, total annual operating costs, and total annual or

---

* The distinction between the two components of operating cost is made for convenience in performing the calculations and is not fundamental. The direct annual operating cost is comprised of basic cost elements, whereas the indirect annual operating cost comprises a series of adjustments that are influenced by other factors, such as tax assumptions. Direct annual operating costs for each control are given in Tables 6.1-1, 6.1-2, 6.1-3 and 6.2-3. Indirect annual operating costs for all controls are calculated using a standard algorithm (see Section 6.2.2), except for any by-product credits which are given in Tables 6.3-4 and 6.3-5.

per-barrel control costs, a number of economic assumptions were made. Most of these assumptions are listed in Table 6.2-1, and Table 6.2-2 summarizes those assumptions that vary from control to control. The values given in these two tables are the standard values, known as the "standard economic assumptions," which have been used for the cost analyses presented in the oil shale PCTMs. Some of these are varied in the sensitivity analyses which are used to show how control costs change in response to alternative economic assumptions and to changes in the engineering costs.

Where appropriate, the standard economic assumptions are discussed below. Others are discussed in connection with the sensitivity analyses in Section 6.3.2.

Timing of Control Capital Expenditures--

Table 6.2-2 includes the fixed capital expenditure profiles for each category of control. A construction schedule was developed by DRI based on data supplied by Cathedral Bluffs Shale Oil Company (November 14, 1980).* Engineering judgment was then used to determine when the pollution controls would be procured and installed, incorporating the impact of payments made during off-site fabrication. In general, capital expenditures on controls tend to be incurred later than those for most retort construction activities, since the controls are usually among the last items to be installed.

An unusual factor in this PCTM is that completion of the five trains of MIS retorts takes place over four years, while completion of the eight Lurgi retorts occurs over a period of five years (see Section 1, Table 1.4-1). Since a separate air pollution control unit is associated with each MIS retort train or Lurgi retort, this means that the individual units will be placed in service over a period of four or five years. Therefore, depreciation is similarly apportioned for calculation of fixed charge factors. In contrast, all water management equipment, except the kettle evaporators, will be placed in service prior to the operation of the first retort. Consequently, the same timing is used for all water management controls, leading to a single capital recovery factor for all water controls other than the kettle evaporators.**

---

* These data do not necessarily represent the current plans of the Cathedral Bluffs Shale Oil Company.

**In other oil shale PCTMs, site water management equipment (e.g., clarifiers) has been assumed to be installed early in the construction schedule, whereas other water management equipment (e.g., the ammonia recovery unit) has been assumed to be installed at the same time as the retort air pollution controls.

TABLE 6.2-1. SUMMARY OF STANDARD COST AND ECONOMIC ASSUMPTIONS

Assumptions
COST ASSUMPTIONS
• Base Year: Mid-1980 dollars
• Basic Labor Rate: $11.00/hr*
• "Loaded" Labor Rate*: $30.00/hr
• Fixed Capital Costs: 25% engineering and construction overhead and 3% contractor's fee included*
• Contingency Allowances: 20%, all fixed capital costs* 0%, most operating costs* 20%, solid waste direct operating costs
ECONOMIC ASSUMPTIONS
• Project Life: 30 years, including 7-year start-up period
• Normal Output: 117,100 Barrels per Calendar Day (BPCD)
• Proportion of Normal Output During Start-up Period: Year 1 - 2% Year 5 - 68% Year 2 - 10% Year 6 - 77% Year 3 - 28% Year 7 - 80% Year 4 - 47% Years 8-30 - 100%
• Approach: Discounted Cash Flow Evaluation (DCF)*
• Discount Factors: Discrete,* year-end basis
• Method: Determination of Revenue Requirement to provide specified DCF ROR*
• Technique: Annual Capital Charge plus Annual Operating Cost
• Required DCF ROR: 12% (100% Equity Basis)*
• Cost Escalation: None (constant dollar evaluation)*
• Combined State and Federal Income Tax Rate: 48%*
• Depreciation: Method - Sum-of-Year's Digits* Period - 16 years, most items* 10 years, solid waste area 5 years, mobile equipment
• Investment Tax Credit: 20%, most items* 13 1/3%, mobile equipment
• Additional Start-up Costs (spread over Years 1-7): 3% of fixed capital, plus 50% of a normal year's direct operating cost
• Working Capital: 30 days' total operating cost (excluding by-product credit), plus 60 days' by-product credit
• Annual Allowance for Property Taxes and Insurance: 3% of fixed capital
• Colorado Severance Tax: Credit allowed
• Timing of Investment: Initial fixed capital expenditures can occur in Years -3 through +5; expenditures and tax considerations for each control are phased in accordance with the construction and initial operation of each control (see Table 6.2-2 for schedules)
• Corporate Financing: Tax credits and allowances can be passed through to a parent company that can benefit from them immediately, without waiting for the project to become profitable*
• Federal Depletion Allowance: Does not affect pollution control costs

* These methods and factors are in accordance with the recommendations, dated April 22, 1980, of EPA's ad hoc synfuels cost committee.

Source: DRI.

TABLE 6.2-2. ECONOMIC ASSUMPTIONS THAT VARY FROM CONTROL TO CONTROL

	Capital Expenditure Profile	Investment Tax Credit Rate %	Investment Tax Credit Profile	Depreciation Life (years)	Depreciation Starts	Fixed Charge Rate[a] Percent
Retort Timing - MIS Trains						
Controls primarily associated with MIS retorting, i.e., Stretford, FGD, absorber/cooler, kettle evaporators	Year -2: 10% Year -1: 15% Year 0: 20% Year +1: 15% Year +2: 20% Year +3: 15% Year +4: 5%	20	Same as capital[b]	16	Year +1: 40% Year +3: 20% Year +4: 20% Year +5: 20%	19.15
Retort Timing - Lurgi Modules						
Electrostatic precipitator, venturi wet scrubber	Year -1: 5% Year 0: 5% Year +1: 10% Year +2: 15% Year +3: 25% Year +4: 25% Year +5: 15%	20	Same as capital[b]	16	Year +1: 12.5% Year +3: 12.5% Year +4: 25% Year +5: 25% Year +6: 25%	14.82
Water Management						
All water management equipment, except kettle evaporators	Year -3: 5% Year -2: 30% Year -1: 40% Year 0: 25%	20	Same as capital[b]	16	Year +1	23.93
Mining - Particulate Control						
Fabric filters, water and foam sprays	Year -3: 10% Year -2: 20% Year -1: 50% Year 0: 20%	20	Same as capital[b]	16	Year +1	24.13
Ammonia/Hydrocarbon Controls						
Oil and ammonia storage tanks, maintenance of valves, pumps, etc.	Year -1: 30% Year 0: 70%	20	Same as capital[b]	16	Year +1	20.73
Catalytic Converters[c]						
(On diesel equipment)	Year -3: 100% Year +2: 100% Year +7: 100% Year +13: 100% Year +19: 100% Year +25: 100%	13 1/3[d]	Year -2: 100% Year +3: 100% Year +8: 100% Year +14: 100% Year +20: 100% Year +26: 100%	5 5 5 5 5 5	Year -2: 100% Year +3: 100% Year +8: 100% Year +14: 100% Year +20: 100% Year +26: 100%	58.20

(Continued)

TABLE 6.2-2 (cont.)

	Capital Expenditure Profile	Investment Tax Credit Rate %	Investment Tax Credit Profile	Depreciation Life (years)	Depreciation Starts	Fixed Charge Rate[a] Percent
Solid Waste Management (Year 1)						
Runon catchment dam and low-level outlet	Year +1: 100%	20	Year +2	10	Year +2	16.60
Solid Waste Management (Years 1, 2, 3)						
Runoff catchment embankment	Year +1: 33 1/3% Year +2: 33 1/3% Year +3: 33 1/3%	20	Same as capital[b]	10	Year +4	15.29

[a] For standard economic assumptions (see Table 6.2-1).

[b] Qualifies for investment tax credit progress payments.

[c] Capital is replaced five times during project life.

[d] Investment tax credit is reduced because equipment life is less than 7 years.

Source: DRI.

Assumptions for Taxation*--

Depreciation. All oil shale PCTMs used a 16-year depreciation period for most assets. This corresponds to the mid-point of the IRS' Asset Depreciation Range (ADR) guidelines for oil refineries. In practice, many companies would use the lower end of the ADR range, which is 13 years; however, it has been found that this would make very little difference in the results of the analysis.

Some equipment clearly qualifies for a shorter life. Controls associated with processed shale disposal, such as embankments and water impoundments, were regarded as mining equipment, for which a 10-year depreciation period was used. A 5-year depreciation period was used for the mobile equipment, and it was assumed that this equipment was replaced five times during the project life.

The depreciation method used for all taxation calculations was the Sum-of-the-Year's Digits method.

Investment Tax Credit (ITC). A basic 20% ITC was used for all items in accordance with the Energy Tax Act of 1978 (PL 95-618). The mobile equipment has a depreciation period of only 5 years, so the credit is reduced by one-third, to 13 1/3 percent.

Where payments for a control extend over more than one year, the tax credit can be taken as the capital is expended, in accordance with the IRS' progress payments rule. Otherwise, it is taken when the asset is placed into service.

Income tax rate. A combined State and Federal tax rate of 48% was used. In practice, Colorado has a 5% tax rate, so the effective percentage rate should be: $5 + ([1 - 0.05] \times 46) = 48.7\%$. The error introduced by using 48% is negligible.

Depletion allowance. The Federal depletion allowance has not been incorporated into the calculation of taxes. The justification for this is as follows. The percentage depletion allowance is 15% on the "gross income" from an oil shale property. In this case, since the sales or transfer price of shale oil (and, hence, gross income) is independent of pollution control costs, the depletion allowance will not affect those costs. However, there is a limitation that the percentage depletion allowance cannot exceed 50% of

---

* All analyses were conducted prior to enactment of the Economic Recovery Tax Act of 1981 (PL 97-34). As far as an oil shale project is concerned, the main impact of this act is to permit very rapid depreciation under the Accelerated Cost Recovery System (ACRS). Using ACRS, most property would be depreciated over 5 years and mobile equipment would be depreciated over 3 years. A rough estimate of the effect of the provisions of the Economic Recovery Tax Act of 1981 on the pollution control costs is given in Section 6.3.1.

the taxpayer's taxable income from the property, computed without allowance for depletion. Since pollution control costs reduce the taxable income, they could affect the depletion allowance if it was limited under the above rule, and this would then be a cost attributable to pollution control. While this might well be the case in a start-up year, it appears that this limit is unlikely to apply during a normal year's operation. This is because the complete project's total annual operating costs are a low proportion of its total annual costs, including capital-related costs (DRI calculations based on data provided by Cathedral Bluffs Shale Oil Company [November 14, 1980]).

Hence, the impact of the Federal percentage depletion allowance on pollution control costs has been disregarded. This may introduce minor errors during start-up years, but complete project cost data are not publicly available to permit the effect to be calculated. Cost depletion, which might at times be taken instead of percentage depletion, is clearly irrelevant to pollution control costs.

Other Assumptions--

DCF ROR. Twelve percent (per year) was used as a standard assumption (see Section 6.3.2).

Project life and start-up profile.* The MIS-Lurgi project is unusual in that there is a very long build-up period of seven years before full output is reached. (This slow build-up largely results from the nature of MIS retort construction. Retort development occurs continuously, and it is not feasible to bring all trains of MIS retorts into production at the same time.) For this reason, a project life of 30 years, i.e., 23 years of full production, was used.** Furthermore, the production build-up profile is not concurrent between the MIS retorting and the surface (Lurgi) retorting, as the latter generally achieves a smaller proportion of its ultimate capacity in any one year.

The production schedule for the MIS-Lurgi project is given in Table 6.2-1. This schedule involves a change of mining plan in Year 8, which results in a significantly higher grade of shale being fed to the Lurgi retorts.† However, only seven out of eight Lurgi retorts will be operated at any time. In Year 8, the MIS operations change from operating four out of five trains at any one time to operating all five simultaneously. All equipment associated with the MIS operations is designed 25% oversize, which in an emergency would permit four trains of process and control equipment to handle the normal output of five trains. Because of this redundancy, evaluations

---

* This section is based on data provided by the Cathedral Bluffs Shale Oil Company (November 14, 1980); however, these data do not necessarily represent the company's current plans.

**C.f. 20 years in total for the PCTMs on other oil shale processes.

† This is termed the "Phase II mining plan" in the Cathedral Bluffs project.

have been made, as proposed by Cathedral Bluffs, without incorporating any additional operating (stream) factor for normal production years (i.e., Year 8 and beyond).*

Components of Annual Indirect Operating Costs--

The annual indirect operating cost is composed as follows:

Annual property tax and insurance
+ Extra start-up costs (levelized)
- Severance tax credit (levelized)
- Annual by-product credit (if any).

Property tax and insurance allowance. The annual indirect operating cost includes 3% of the fixed capital cost as an allowance for property tax and insurance. This value was selected by DRI after review of a wide variety of sources.

Extra start-up cost. The total extra start-up cost (which is treated as an operating cost, as opposed to being capitalized) is derived from the fixed capital and direct annual operating costs. The capital-related component is 3% of the fixed capital cost as an allowance for "fix it" costs. The operating cost-related component, which is 50% of a normal year's direct operating cost, allows for hiring and training employees before production commences and for higher unit costs during the start-up period.

A standard value for the extra start-up cost for surface retorting plants with a 2-year start-up period was selected by DRI after a review of several sources, including estimates for TOSCO II (Nutter and Waitman, 1978) and Paraho (Pforzheimer and Kunchal, March 24, 1977) plants. This value was 3% of fixed capital cost and 20% of a normal year's direct operating cost. Because of the long start-up period for the MIS-Lurgi project, the operating cost-related portion was increased from 20 to 50 percent. This is in reasonable accord with the developer's estimate (based on DRI analysis of data supplied by the Cathedral Bluffs Shale Oil Company [November 14, 1980]). The extra start-up cost was assumed to be incurred over the 7 start-up years but is levelized to spread it uniformly over every barrel of oil produced (see Sections 6.4.1 and 6.4.3).

Severance tax credit. Under Colorado HB 1076, enacted in 1977, severance tax is levied on the production of a commercial oil shale facility at the rate of 4% of the "gross proceeds" for surface retorted oil, reduced to 3% for oil produced by in situ methods. "Gross proceeds" is defined as the value of the oil shale at the point of severance and is calculated by subtracting costs (e.g., retorting and mining) from the gross sales income.

---

* Other oil shale PCTMs use a 90% operating factor (i.e., the ratio of actual annual production to maximum production based on continuous operation at full output) in normal production years.

Since pollution controls add to costs, they reduce the gross proceeds by a corresponding amount. Hence, a credit for severance tax not paid should be deducted from the pollution control costs.

While operating costs are clearly allowable in calculating gross proceeds, return on capital does not appear to be (the statute refers to allowing "...costs, including direct and indirect expenditures for: (a) equipment and machinery...."). Hence, when this credit is calculated, the capital charge must be replaced by some form of amortization. For this analysis, the severance tax credit calculations are based on direct and indirect annual operating costs, plus 5% of the fixed capital cost to provide a crude capital amortization.

In applying this credit, allowance was also made for exemptions to the tax for the first 10,000 barrels per day of production and for plants that have not achieved 50% of their design capacity, together with reduced rates of tax in the early years. The credit is levelized in order to achieve a uniform per-barrel cost. The methodology utilized (LFAC2 in Section 6.4.1) is not precise, but since the severence tax correction is typically less than 2% of the total annual or per-barrel control cost (see Section 6.2.4), further refinement is not justified.*

By-product credits. The by-product credit (if any) for each control is shown in Tables 6.3-4 and 6.3-5. (There are no salable by-products from solid waste management.) By-product values of $110 per ton for ammonia, $30 per long ton for sulfur, and $32 per barrel for oils were used.

At present, there is no significant market for sulfur in the Rocky Mountain Region; in the past, shipping costs to move recovered sulfur to a chemical complex could have been greater than its delivered value. However, the price of high quality sulfur has gone up substantially in recent years, reaching values as high as $129 per long ton (U.S. DOI, August 1981). High demand for sulfur is projected through the year 2000 (Rangnow and Fasullo, September 28, 1981). Hence, a nominal $30 per long ton has been included for recovered sulfur. However, if in the future a sulfuric acid plant and fertilizer complex are developed in the area, the values of by-product sulfur and ammonia would be raised.

Working Capital--

The working capital associated with a control was taken as one month's total operating cost plus three months' by-product credit. This is equivalent to be one month's total operating cost disregarding the by-product

---

* Since this analysis was conducted, the Colorado Legislature has amended the severance tax legislation pertaining to oil shale. While the basic rate for aboveground retorting is unchanged, the various exemptions discussed above are reduced, and the reduced rate for in situ retorting is eliminated. This will result in plants paying slightly more severance tax, which marginally increases the severance tax credit, thereby marginally (less than 1%) reducing the pollution control cost.

credit, plus two months' by-product credit. Two months' by-product credit represents one month's inventory and one month's receivables. These values were selected by DRI after review of a variety of data sources.

Working capital is advanced in accordance with the direct annual operating cost plus the extra start-up cost, as follows:

	Percentage of Normal Output	Extra Start-up Cost as Proportion of a Normal Year's Direct Operating Cost	Annual Operating Cost Relative to a Normal Year's Operating Cost	Working Capital Increment
Year 1	2%	5%	7%	7%
Year 2	10%	10%	20%	13%
Year 3	28%	10%	38%	18%
Year 4	47%	10%	57%	19%
Year 5	68%	5%	73%	16%
Year 6	77%	5%	82%	9%
Year 7	80%	5%	85%	3%
Year 8	100%	--	100%	15%
		50%		100%

Seven percent of the total working capital is advanced in Year 1 because the annual operating cost comprises 2% of the normal year's direct annual operating cost and there is a 5% extra start-up cost. In Year 2, the direct annual operating cost is 10% of a normal year, but the extra start-up cost is also 10% of the direct annual operating cost, for a total of 20 percent. This is 13% more than in Year 1, so 13% of the total working capital is advanced in this year. And so on until Year 8, by which time all the working capital has been advanced. Working capital is recovered in Year 30.

The working capital charge rate (RW) is calculated in a similar way to a fixed charge rate (see Sections 6.4.1 and 6.4.2). For 12% DCF ROR and normal project-timing assumptions, RW = 21.80%.

6.2.3 Solid Waste Management Costs

Throughout this manual a distinction is made between fixed capital costs and annual operating costs. The importance of this distinction is related to the treatment for determining income tax liability. Operating costs can be claimed as an expense in the year in which they are incurred, whereas a fixed capital cost must be depreciated over the period for which the asset is expected to be used. The effect of classifying a cost as an operating cost rather than a capital cost is to reduce the tax liability in any given year.

For air and water pollution controls, the distinction between fixed capital and annual operating costs is unequivocal. For solid waste management costs which are developed in the form of year-by-year cash flows (Table 6.1-4), the distinction is less clear. Costs that occur in only Year 1 (the runon catchment dam and low-level outlet) or Years 1, 2 and 3 (the runoff catchment embankment) were treated as fixed capital costs, while those that continue for 25 or more years were considered as operating costs.

Costs that occur at the end of the project (e.g., revegetation) were also treated as operating costs, since there is no remaining project life over which to depreciate them.

Since the solid waste management operating costs are not proportional to production, they were "levelized" to transform them into equivalent direct annual operating costs that are proportional to production, so that they can be treated in the same way as other direct annual operating costs. Levelizing involves determining the annual cost that is proportional to production and which has the same present value (for a given DCF ROR) as the irregular operating cost stream. Further explanation and an example are provided in Section 6.4.3. Costs designated as fixed capital were not levelized.

Table 6.2-3 presents the solid waste management fixed capital costs and direct annual operating costs (levelized at 12% DCF ROR) derived from Table 6.1-4.

TABLE 6.2-3. FIXED CAPITAL AND DIRECT ANNUAL OPERATING COSTS FOR SOLID WASTE MANAGEMENT

Activity	Fixed Capital Cost ($000's)	Direct Annual Operating Cost[a] ($000's/yr)
SURFACE HYDROLOGY		
Runon Catchment Dam and Low-level Outlet	452[b]	
Runoff Catchment Embankment	460[c]	
Runoff Collection System		51
SURFACE STABILIZATION		
Dust Suppression		1,948
Grubbing, Stripping and Clearing		483
Reclamation and Revegetation		250

[a] The direct annual operating costs are levelized with respect to production at 12% DCF ROR.

[b] Spent in first year of production, Year 1.

[c] Spent uniformly in Years 1-3.

Source: DRI.

6.2.4 Control Cost Example

Table 6.2-4 provides an example of the composition of the various elements of per-barrel cost for a single major pollution control, the Stretford system. Per-barrel costs follow identical proportions to annual costs.

TABLE 6.2-4. PER-BARREL COST BREAKDOWN FOR STRETFORD SYSTEM
(Standard Economic Assumptions, Case Study B)

Cost Category	Cents/Barrel		Percentage of Total	
Fixed Capital Charge				
Equity Return (12% ROR)	84.3		55.0	
Income Taxes Paid	23.7		15.4	
Investment Tax Credit	(16.9)		(11.0)	
		91.1		59.4
Working Capital Charge		1.3		0.9
Direct Operating Costs				
Maintenance	10.0		6.5	
Operating Supplies	8.8		5.7	
Operating Labor	21.9		14.3	
Cooling Water	--		--	
Steam	1.3		0.8	
Electricity	6.0		4.0	
		48.0		31.3
Indirect Operating Costs				
Taxes and Insurance	14.3		9.3	
Extra Start-up Costs	4.9		3.2	
Severance Tax Credit	(2.3)		(1.5)	
By-product Credit	(4.0)		(2.6)	
		12.9		8.4
TOTAL COST		153.3		100.0

Source: DRI.

It can be seen that the fixed capital charge amounts to 59.4% of the total cost, whereas the working capital charge is only 0.9% of the total cost. It is interesting to note that the fixed capital charge is almost entirely return on equity, as the investment tax credit (20% of fixed capital cost) almost offsets the income tax liability over the project life when both are discounted at 12%, which is the specified DCF ROR. This illustrates the effect of the time-value of money, as the tax credit is given before production commences, whereas the regular tax liability is weighted toward the later years of the project.

The direct operating costs for the Stretford system make up 31.3% of the total cost. Operating labor (14.3%) is the largest component, followed by maintenance, operating supplies and utilities (electricity and steam).

The indirect operating costs amount to 8.4% of the total cost for this control, of which 9.3% results from the cost of property tax and insurance. There is a by-product credit of 2.6% of the total cost, and the extra start-up costs and the severance tax credit are 3.2% and 1.5%, respectively, of the total.

These cost proportions for the Stretford system are typical of those for air pollution controls. However, for some controls, the indirect operating cost or even the per-barrel control cost can become negative where there is a significant by-product credit.

Water pollution control costs tend to be less capital-intensive, i.e., the ratio of the total annual capital charge to the total annual operating cost is lower. This is because some controls have high utility costs.

Solid waste management costs are different in that they are basically either a fixed capital cost or a direct annual operating cost, but not both for a given control. This reduces working capital and indirect annual operating costs, respectively, to essentially zero.

6.3 COST ANALYSIS RESULTS

The methodology used to develop the data presented in this section is identical to a complete discounted cash flow evaluation; that is, it solves for the annual or per-barrel revenue required to provide the specified return on the investment (DCF ROR) associated with a control. This revenue requirement is known as the total annual or per-barrel control cost. The cost methodology is outlined in Section 6.2, and further details are provided in Section 6.4.1.

Three control items--proper maintenance of valves and pumps, floating roof oil storage tanks, and the MIS absorber/cooler--have relatively large by-product credits which lead to negative total annual costs (i.e., total annual cost credits). Although these items might consequently not be considered pollution controls, the costs of all three have been included in the total cost of air pollution control. The net credits associated with proper maintenance and floating roof oil storage tanks combined represent a very small proportion (less than 0.4%) of the total air pollution control cost.

The net credit for the MIS absorber/coolers, however, is quite large (29% for Case Study A and 37% for Case Study B of the total air control cost under standard economic assumptions). In some of the more severe sensitivity analyses considered in Section 6.3.2, the total cost for the MIS absorber/cooler actually becomes positive (as increased annual capital charges become large enough to offset the annual by-product credit for recovered shale oil). This is one reason for including the cost of the MIS absorber/cooler in the total pollution control cost.

6.3.1 Results for the Standard Economic Assumptions*

The term "standard economic assumptions" is used to describe the normal economic assumptions presented in Tables 6.2-1 and 6.2-2. The majority of these assumptions are in reasonable accord with normal engineering and economic evaluation practices. The most critical economic assumption is that of 12% required DCF ROR. This figure was adopted for the oil shale PCTMs and would be appropriate for a mature industry, but it is probably low for a pioneer plant at this time (see Sections 6.2.1 and 6.3.2 for a discussion of factors influencing the selection of a DCF ROR).

Table 6.3-1 provides a summary of pollution control costs developed using the standard economic assumptions for the two case studies considered in this manual. Table 6.3-2 provides additional detail based on the control groupings listed in Table 6.3-3. Note that total costs for solid waste management are not provided. A complete solid waste management plan for the MIS-Lurgi project has not been proposed. As a result, cost estimates are available for particular items only, and no estimate of the total solid waste management cost can be made at this time.

---

* As already mentioned, this analysis was developed prior to enactment of the Economic Recovery Tax Act of 1981. The rapid depreciation (ACRS) permitted by this act would significantly reduce the values of the fixed charge factors, especially for normal ("pass through") financing as opposed to stand-alone financing.

For standard economic assumptions, very rough estimates of the decreases in total annual control costs are as follows:

Air controls:	20-25% decrease on aggregate.
Water controls:	5% decrease on aggregate.
Solid waste mgt.:	0-15% decrease, depending on item.

The large effect on the aggregate cost for air controls arises from the MIS absorber/cooler credit.

As an alternative assumption, if the energy portion (10%) of the investment tax credit were allowed to expire at the end of 1982, the combined effect of this and ACRS would be to cause small increases in total annual control costs.

TABLE 6.3-1. SUMMARY OF POLLUTION CONTROL COSTS FOR STANDARD ECONOMIC ASSUMPTIONS

Case Study	Fixed Capital Cost[a] ($000's)	Total Annual Capital Charge[b] ($000's/yr)	Total Annual Operating Cost ($000's/yr)	Total Annual Control Cost ($000's/yr)	Per-barrel Control Cost (cents/bbl)	Per-barrel Control Cost as a Proportion of Oil Value[c] (%)
Air Pollution Control						
A	485,111	94,862	(22,285)	72,577	170	5.3
B	463,559	90,623	(33,528)	57,095	133	4.2
Water Pollution Control						
A	77,754	18,344	55,387	73,731	172	5.4
B	78,397	18,492	56,307	74,799	175	5.5

[a] Does not include working capital.

[b] Includes charge for working capital.

[c] Assuming shale oil is valued at $32/barrel.

Source: DRI.

TABLE 6.3-2. POLLUTION CONTROL COSTS, BY CONTROL GROUP, FOR THE STANDARD ECONOMIC ASSUMPTIONS

Control Group[a]	Case Study A			Case Study B		
	Fixed Capital Cost[b] ($000's)	Total Annual Control Cost ($000's/yr)	Per-barrel Control Cost (cents/bbl)	Fixed Capital Cost[b] ($000's)	Total Annual Control Cost ($000's/yr)	Per-barrel Control Cost (cents/bbl)
Air Pollution Control						
Particulate Control	53,844	12,091	28	53,844	12,091	28
Retort Gas Treatment	428,289	60,017	141	406,737	44,535	104
Miscellaneous Air	2,978	469	1	2,978	469	1
TOTAL AIR	485,111	72,577	170	463,559	57,095	133
Water Pollution Control						
Condensate Treatment	76,678	73,090	171	77,443	74,214	174
Miscellaneous Water	1,076	641	2	954	585	1
TOTAL WATER	77,754	73,731	172	78,397	74,799	175

[a] Refer to Table 6.3-3 for a listing of the items that are included in each control group.

[b] Does not include working capital.

Source: DRI.

TABLE 6.3-3. CONTROL GROUPINGS

Group Designation	Specific Controls
Air Pollution Control	
Particulate Control:	Fabric filters, water and foam sprays, electrostatic precipitators, venturi wet scrubber.
Retort Gas Treatment:	Stretford, flue gas desulfurization, MIS absorber/cooler.
Miscellaneous Air:	Ammonia storage tanks, catalytic converters, floating roof oil storage tanks, maintenance of valves, pumps, etc.
Water Pollution Control	
Condensate Treatment:	API oil/water separator, Phosam-W ammonia recovery unit, retort water stripper, multimedia gravity filtration unit, kettle evaporators.
Miscellaneous Water:	Mine water clarifier,* boiler feedwater treatment,* cooling water treatment,* equalization pond, runoff oil/water separator.

* These technologies could be considered as part of the process rather than pollution control.

Source: DRI.

Table 6.3-1 shows that the total fixed capital cost for air pollution control equipment ranges from $464 million (Case Study B) to $485 million (Case Study A), while the total air control cost ranges from $1.33 per barrel (Case Study B) to $1.70 per barrel (Case Study A). The fixed capital cost for water pollution control is nearly identical for both case studies, totaling approximately $78 million. Total water pollution control costs are also virtually identical--$1.72 per barrel for Case Study A and $1.75 per barrel for Case Study B.

Table 6.3-1 also compares the per-barrel cost of pollution control to an assumed $32 per-barrel value for shale oil.* For air pollution control, the

* Other prices for the value of shale oil are used in the other oil shale PCTMs, reflecting quality differences.

proportion is 5.3% for Case Study A and 4.2% for Case Study B. Total water pollution control costs represent about 5.5% of the $32 per-barrel value of shale oil.

The works-gate value of $32 per barrel (mid-1980 dollars) for the MIS and Lurgi shale oils was based on two sources: a developer's estimate of $29 per barrel (Cathedral Bluffs Shale Oil Co., November 14, 1980), and a study by Peat, Marwick, Mitchell & Co. (September 1980) which derived current values for shale oil. This study concluded that the per-barrel value of shale oil (at the project site) was $31.50 to $32.50 for surface retorted oil and $34.50 to $35.50 for MIS retorted oil. In no case was upgrading involved.

It is generally anticipated that the real price of oil will increase in the future. Hence, the value of $32 may be considered to be a conservative estimate because it does not include any element of escalation relative to the general level of prices. For example, if oil prices were to escalate at only 2% per annum relative to general cost levels (which can be expected to include pollution control costs), the real value of shale oil would reach almost $58 per barrel (in mid-1980 dollars) by the year 2010, i.e., at the end of the 30-year project life.

If Case Study A and Case Study B are compared (see Table 6.3-2), the major difference between them is in the gas treatment. Case Study A uses Flue Gas Desulfurization (FGD), whereas Case Study B uses a Stretford unit to desulfurize the retort gases prior to their combustion. Both fixed capital and total annual operating costs for the Stretford unit (Case Study B) are lower than for the FGD unit (Case Study A).

Water treatment controls and cost are virtually identical for Case Studies A and B. Case Study B has marginally greater fixed capital and total annual operating costs due to somewhat larger kettle evaporators.

Cost Details--

Full cost details for each air and water pollution control (using standard economic assumptions) are presented in Tables 6.3-4 and 6.3-5. As already noted, three items--the MIS absorber/coolers, proper maintenance of valves and pumps, and floating roof oil storage tanks--were found to have negative total annual costs. In these cases, the annual by-product credits were large enough to more than offset the total annual capital charges and total annual operating costs. These items were, nevertheless, incorporated into the total air pollution control costs.

Table 6.3-6 presents the costs of six solid waste management items. Of the six, dust suppression ($2.1 million total annual control cost or 4.8 cents per barrel) and grubbing, stripping and clearing ($0.5 million total annual cost or 1.2 cents per barrel) are the most costly items. Both of these items are primarily operating expenditures (zero fixed capital cost). The only solid waste management items with fixed capital costs are the runon catchment dam and low-level outlet and the runoff catchment embankment (totaling $0.9 million in fixed capital, but representing only

TABLE 6.3-4. DETAILS OF AIR POLLUTION CONTROL COSTS, STANDARD ECONOMIC ASSUMPTIONS

Control Identification (No. of Units)	Fixed Charge Factor (%)	Fixed Capital Cost ($000's)	Working Capital ($000's)	Total Annual Capital Charge[a] ($000's/yr)	Direct Annual Op. Cost ($000's/yr)	Annual By-product Credit ($000's/yr)	Indirect Annual Op. Cost[b] ($000's/yr)	Total Annual Op. Cost ($000's/yr)	Total Annual Control Cost ($000's/yr)	Per-barrel Control Cost (cents)
CONTROLS COMMON TO CASE STUDIES A & B										
Fabric Filter (2)	24.13	52	1	13	6	--	2	8	21	0.1
Fabric Filter (2)	24.13	52	1	13	6	--	2	8	21	0.1
Fabric Filter (2)	24.13	125	3	31	26	--	5	31	62	0.1
Fabric Filter (2)	24.13	125	3	31	26	--	5	31	62	0.1
Fabric Filter (1)	24.13	20	<1	5	3	--	1	4	9	<0.1
Fabric Filter (1)	24.13	838	12	205	112	--	31	143	348	0.8
Fabric Filter (1)	24.13	96	2	24	23	--	4	27	51	0.1
Fabric Filter (1)	24.13	13	<1	3	1	--	<1	1	4	<0.1
Fabric Filter (2)	24.13	41	1	10	5	--	2	7	17	<0.1
Water and Foam Sprays	24.13	502	71	137	805	--	45	850	987	2.3
Electrostatic Precipitator (8)	14.82	51,800	228	7,727	1,058	--	1,679	2,737	10,464	24.5
Venturi Wet Scrubber (1)	14.82	180	2	27	12	--	6	18	45	0.1
Subtotal Particulate Controls		53,844	324	8,226	2,083	--	1,782	3,865	12,091	28.3
Ammonia Storage Tanks (5)	20.73	2,330	6	484	--	--	74	74	558	1.3
Catalytic Converters	58.20	88	3	52	31	--	4	35	87	0.2
Maintenance of Valves, Pumps, etc.	20.73	110	48	33	111	224[c]	(210)	(99)	(66)	(0.2)
Floating Roof Oil Storage Tanks (3)	20.73	450	41	102	--	233	(212)	(212)	(110)	(0.3)
Subtotal Misc. Air Controls		2,978	98	671	142	457	(344)	(202)	469	(1.0)
CONTROLS USED IN CASE STUDY A										
Flue Gas Desulfurization (10)	19.15	224,898	3,107	43,745	29,107	--[c]	8,180	37,287	81,032	189.6
MIS Absorber/Cooler (10)	19.15	203,391	15,004	42,220	8,974	81,094	(72,209)	(63,235)	(21,015)	(49.2)
Subtotal Retort Gas Treatment		428,289	18,111	85,965	38,081	81,094	(64,029)	(25,948)	60,017	140.4
TOTAL AIR POLLUTION CONTROLS		485,111	18,533	94,862	40,306	81,551	(62,591)	(22,285)	72,577	169.7
CONTROLS USED IN CASE STUDY B										
Stretford (30)	19.15	203,346	2,595	39,506	20,513	1,698[d]	5,531	26,044	65,550	153.4
MIS Absorber/Cooler (10)	19.15	203,391	15,004	42,220	8,974	81,094[c]	(72,209)	(63,235)	(21,015)	(49.2)
Subtotal Retort Gas Treatment		406,737	17,599	81,726	29,487	82,792	(66,678)	(37,191)	44,535	104.2
TOTAL AIR POLLUTION CONTROLS		463,559	18,021	90,623	31,712	83,249	(65,240)	(33,528)	57,095	133.5

[a] Includes fixed and working capital charges. RW = 21.80%.

[b] Includes annual by-product credit.

[c] For shale oil at $32/bbl.

[d] For sulfur at $30/long ton.

Source: DRI estimates based on data provided by SWEC.

TABLE 6.3-5. DETAILS OF WATER POLLUTION CONTROL COSTS, STANDARD ECONOMIC ASSUMPTIONS

Control Identification	Fixed Charge Factor (%)	Fixed Capital Cost ($000's)	Working Capital ($000's)	Total Annual Capital Charge[a] ($000's/yr)	Direct Annual Op. Cost ($000's/yr)	Annual By-product Credit ($000's/yr)	Indirect Annual Op. Cost[b] ($000's/yr)	Total Annual Op. Cost ($000's/yr)	Total Annual Control Cost ($000's/yr)	Per-barrel Control Cost (cents)
CASE STUDY A										
API Oil/Water Separator	23.93	2,484	12	597	61	--	81	142	739	1.7
Phosam-W Ammonia Recovery Unit	23.93	22,994	2,634	6,077	14,933	7,604[c]	(6,134)	8,799	14,876	34.8
Retort Water Stripper	23.93	9,500	294	2,338	3,118	--	414	3,532	5,870	13.7
Multimedia Gravity Filtration Unit	23.93	6,465	45	1,557	328	--	217	545	2,102	4.9
Kettle Evaporator	19.15	35,235	3,499	7,510	39,442	--	2,551	41,993	49,503	115.8
Subtotal Condensate Treatment		76,678	6,484	18,079	57,882	7,604	(2,871)	55,011	73,090	170.9
Mine Water Clarifier[d]	23.93	806	12	196	114	--	30	144	340	0.8
Cooling Water Treatment[d]	23.93	--	7	2	86	--	3	89	91	0.2
Boiler Feedwater Treatment[d]	23.93	155	12	40	128	--	10	138	178	0.4
Equalization Pond	23.93	68	<1	16	--	--	2	2	18	<0.1
Runoff Oil/Water Separator	23.93	47	<1	11	1	--	2	3	14	<0.1
Subtotal Misc. Water		1,076	31	265	329	--	47	376	641	1.5
TOTAL WATER POLLUTION CONTROLS		77,754	6,515	18,344	58,211	7,604	(2,824)	55,387	73,731	172.4
CASE STUDY B										
API Oil/Water Separator	23.93	2,484	12	597	61	--	81	142	739	1.7
Phosam-W Ammonia Recovery Unit	23.93	22,994	2,715	6,094	15,333	7,880[c]	(6,388)	8,945	15,039	35.2
Retort Water Stripper	23.93	9,500	294	2,338	3,118	--	414	3,532	5,870	13.7
Multimedia Gravity Filtration Unit	23.93	6,465	45	1,557	328	--	217	545	2,102	4.9
Kettle Evaporator	19.15	36,000	3,566	7,671	40,190	--	2,603	42,793	50,464	118.1
Subtotal Condensate Treatment		77,443	6,632	18,257	59,030	7,880	(3,073)	55,957	74,214	173.6
Mine Water Clarifier[d]	23.93	655	9	159	82	--	24	106	265	0.6
Cooling Water Treatment[d]	23.93	--	8	2	97	--	4	101	103	0.2
Boiler Feedwater Treatment[d]	23.93	153	11	39	127	--	10	137	176	0.4
Equalization Pond	23.93	99	<1	24	--	--	3	3	27	0.1
Runoff Oil/Water Separator	23.93	47	<1	11	1	--	2	3	14	<0.1
Subtotal Misc. Water		954	29	235	307	--	43	350	585	1.3
TOTAL WATER POLLUTION CONTROLS		78,397	6,661	18,492	59,337	7,880	(3,030)	56,307	74,799	174.9

[a] Includes fixed and working capital charges. RW = 21.80%.

[b] Includes annual by-product credit.

[c] For ammonia at $110/ton.

[d] These technologies could be considered as part of the process rather than pollution control.

Source: DRI estimates based on data provided by WPA.

0.4 cents per-barrel control cost). The per-barrel figures are somewhat more than doubled if expressed with respect to Lurgi retorted shale, but are still small in comparison to the costs of air and water pollution controls. However, it should be remembered that these costs represent only a portion of a total cost associated with a complete solid waste management operation.

6.3.2 Sensitivity Analyses

This section explores the sensitivity of the results to changes in the engineering costs and economic assumptions. In general, only a single change from the standard economic assumptions was made in each case, enabling the impact of this change to be isolated. Table 6.3-7 summarizes the changes made for each case, while Table 6.3-8 displays the fixed and working capital charge rates used to calculate per-barrel control costs. Per-barrel pollution control costs, expressed as a percentage of a $32 per-barrel shale oil value for both case studies, are given in Table 6.3-9. Table 6.3-10 provides additional detail for the absolute per-barrel control costs and includes percentage changes from the standard economic assumptions. Comparative results for Case Study A for the various sensitivity analyses are presented graphically in Figures 6.3-1 and 6.3-2. No sensitivity analysis has been performed on the solid waste management costs, as only partial cost estimates were available. Each sensitivity analysis is discussed below.

Twenty Percent Increase in Fixed Capital Costs--

Cost escalation is always a problem with pioneer plants because of the numerous uncertainties (Merrow, September 1978; Merrow, Chapel and Worthing, July 1979). A 20% increase is not at all unreasonable despite the inclusion of a 20% contingency in the fixed capital cost estimates.

Table 6.3-10 shows that the effect of a 20% increase in fixed capital costs varies significantly among the control groups. Retort gas treatment, which is capital-intensive, shows a greater percentage increase (32% for Case Study A and 41% for Case Study B) than water pollution control, which is operating cost-intensive (only 5% increase for both case studies). The cost of particulate and miscellaneous air controls increases by 17% for both case studies.

Overall, the difference in the total cost increase for air pollution control between the two case studies is not large, since both case studies are equally capital-intensive. Relative to results under the standard economic assumptions, the increase in total air pollution control cost is 28 to 36%, or 47 to 50 cents per barrel. These results indicate that the air pollution controls are fairly capital-intensive. In contrast, the increase in the total water pollution control cost is relatively small in both percentage (5%) and absolute terms (9 to 10 cents per barrel), as the water pollution controls are not capital-intensive.

TABLE 6.3-6. DETAILS OF SOLID WASTE MANAGEMENT COSTS, STANDARD ECONOMIC ASSUMPTIONS

Control Identification	Fixed Charge Factor (%)	Fixed Capital Cost ($000's)	Working Capital ($000's)	Total Annual Capital Charge* ($000's/yr)	Direct Annual Op. Cost ($000's/yr)	Indirect Annual Op. Cost ($000's/yr)	Total Annual Op. Cost ($000's/yr)	Total Annual Control Cost ($000's/yr)	Per-barrel Control Cost (cents)	Per-barrel Cost for Lurgi Retorted Shale Only (cents)
SURFACE HYDROLOGY										
Runon Catchment Dam and Low-level Outlet	16.60	452	1	75	--	14	14	90	0.2	0.5
Runoff Catchment Embankment	15.29	460	1	71	--	15	15	85	0.2	0.5
Runoff Collection System	--	--	4	1	51	2	53	54	0.1	0.3
SURFACE STABILIZATION										
Dust Suppression	--	--	168	37	1,948	71	2,019	2,056	4.8	11.7
Grubbing, Stripping and Clearing	--	--	42	9	483	18	501	510	1.2	2.9
Reclamation and Revegetation	--	--	22	5	250	9	259	264	0.6	1.5

* Includes fixed and working capital charges. RW = 21.80%.

Note: There are no by-product credits.

Source: DRI estimates based on data provided by SWEC.

TABLE 6.3-7. ASSUMPTIONS FOR SENSITIVITY ANALYSES*

Sensitivity Analysis	DCF ROR	Fixed Capital Costs	Direct Operating Costs	By-product Credits	Comments
+20% Fixed Capital Costs	12%	Increased 20%	SEA	SEA	
+20% Direct Operating Costs	12%	SEA	Increased 20%	SEA	
+66.7% Utilities Costs	12%	SEA	Utility portion increased 66.7%	SEA	
80% of Planned Output	12%	SEA	Decreased 10%	Decreased 20%	
20-year Project Life	12%	SEA	SEA	SEA	The RC and RW calculations were based on a 20-year project life.
Delayed Start-up	12%	SEA	SEA	SEA	A 2-year delay was incorporated into the RC and RW calculations by halting production in Years 3 and 4 and resuming in Year 5. Project life remained at 30 years.
15% DCF ROR	15%	SEA	SEA	SEA	
Stand-alone Financing	12%	SEA	SEA	SEA	For RC and RW calculations, investment tax credit and depreciation earned in or before Year 5 were accumulated and taken as a lump sum in Year 5. The schedules after Year 5 remained unchanged.
Stand-alone Financing at 15% DCF ROR	15%	SEA	SEA	SEA	
+20% Fixed Capital Costs, Delayed Start-up and 15% DCF ROR	15%	Increased 20%	SEA	SEA	A 2-year delay was incorporated into the RC and RW calculations by halting production in Years 3 and 4 and resuming in Year 5. Project life remained at 30 years.
+20% Fixed Capital Costs, Delayed Start-up, 15% DCF ROR and Stand-alone Financing	15%	Increased 20%	SEA	SEA	A 2-year delay was incorporated into the RC and RW calculations as above, and the investment tax credit and depreciation were accumulated to Year 7.

* SEA indicates that the costs are the same as those used for analysis based on standard economic assumptions.

Source: DRI.

TABLE 6.3-8. CHARGE RATES FOR SENSITIVITY ANALYSES

	Standard Economic Assumptions	Sensitivity Analyses										
		20% Increase in Fixed Capital Costs	20% Increase in Direct Operating Costs	66.7% Increase in Utilities Costs	80% of Planned Output	20-year Project Life	Delayed Start-up	15% DCF ROR	Stand-alone Financing	Stand-alone Financing at 15% DCF ROR	Combined Assumptions[a]	Combined Assumptions with Stand-alone Financing[a]
Fixed Charge Rate[b]												
Retort Timing - MIS Trains	19.15	19.15	19.15	19.15	19.15	21.57	24.26	26.59	22.50	31.75	35.07	45.04
Retort Timing - Lurgi Modules	14.82	14.82	14.82	14.82	14.82	16.69	17.02	19.51	16.35	21.81	22.95	31.34
Water Management	23.93	23.93	23.93	23.93	23.93	26.95	30.29	34.80	29.68	43.78	46.05	61.59
Mining - Particulate Control	24.13	24.13	24.13	24.13	24.13	27.18	30.54	35.14	29.93	44.21	46.50	62.16
Ammonia/Hydrocarbon Controls	20.73	20.73	20.73	20.73	20.73	23.35	26.24	29.39	25.69	37.02	38.90	52.65
Catalytic Converters	58.20	58.20	58.20	58.20	58.20	59.29	69.91	77.15	72.66	99.83	96.99	141.23
Solid Waste (Year 1)	16.60	16.60	16.60	16.60	16.60	18.69	21.01	22.86	19.62	27.28	30.25	40.33
Solid Waste (Years 1,2,3)	15.29	15.29	15.29	15.29	15.29	17.22	19.35	20.50	17.22	23.41	27.13	34.11
Working Capital Charge Rate	21.80	21.80	21.80	21.80	21.80	21.63	23.24	26.95	21.80	21.63	29.25	29.25

[a] Combined assumptions are 20% increase in fixed capital costs, 15% DCF ROR and delayed start-up.

[b] Refer to Table 6.2-2 for pollution controls included in each category.

Source: DRI.

TABLE 6.3-9. SENSITIVITY ANALYSES EXPRESSED AS A PERCENTAGE OF SHALE OIL VALUE

Sensitivity Analysis	Per-barrel Control Cost as a Percent of $32/Barrel Shale Oil Value			
	Air		Water	
	A	B	A	B
Standard Economic Assumptions	5.3	4.2	5.4	5.5
20% Increase in Fixed Capital Costs	6.9	5.7	5.7	5.8
20% Increase in Direct Operating Costs	5.9	4.7	6.3	6.4
66.7% Increase in Utilities Costs	6.2	4.5	8.1	8.3
80% of Planned Output	7.6	6.4	6.3	6.4
20-year Project Life	6.2	5.0	5.6	5.7
Delayed Start-up	7.0	5.8	5.7	5.8
15% DCF ROR	8.0	6.7	6.0	6.1
Stand-alone Financing	6.4	5.2	5.7	5.7
Stand-alone Financing at 15% DCF ROR	9.7	8.3	6.4	6.5
Combined Assumptions*	13.5	12.0	7.1	7.2
Combined Assumptions with Stand-alone Financing*	17.7	16.0	8.0	8.1

* Combined assumptions are 20% increase in fixed capital costs, 15% DCF ROR and delayed start-up.

Source: DRI.

Twenty Percent Increase in Operating Costs--

Operating costs are often better defined than capital costs, which is why an operating cost contingency is not normally included in the direct annual operating costs. However, there are many reasons why operating costs could be higher than anticipated. For example, regional shortages of skilled labor could result in higher wages and reduced productivity. Also, labor costs may escalate faster than other costs. Maintenance costs could be higher than expected, and both utility requirements and utility unit costs could deviate from expectations.

For air pollution controls, the overall effect of an increase in direct annual operating cost is much less than that of the same percentage increase in fixed capital cost. For a 20% increase, the retort gas treatment cost increases by 19 cents per barrel (13%) for Case Study A and 15 cents per

TABLE 6.3-10. SENSITIVITY ANALYSES BY CONTROL GROUP

Media and Control Group	Standard Economic Assumptions ¢/bbl	20% Increase in Fixed Capital Costs ¢/bbl	20% Increase in Fixed Capital Costs % Change	20% Increase in Direct Operating Costs ¢/bbl	20% Increase in Direct Operating Costs % Change	66.7% Increase in Utilities Costs ¢/bbl	66.7% Increase in Utilities Costs % Change	80% of Planned Output ¢/bbl	80% of Planned Output % Change
AIR POLLUTION CONTROL									
Particulate and Misc. Air Controls									
Case Studies A & B	29	34	+17.0	30	+3.8	31	+5.8	36	+23.6
Retort Gas Treatment									
Case Study A	140	185	+31.9	159	+13.4	168	+19.3	208	+48.3
Case Study B	104	147	+40.9	119	+14.0	112	+7.2	167	+59.8
TOTAL AIR, CASE STUDY A	170	220	+27.6	190	+11.7	199	+17.0	245	+44.0
TOTAL AIR, CASE STUDY B	134	181	+35.6	149	+11.7	143	+6.9	203	+51.8
WATER POLLUTION CONTROL									
Case Study A	172	182	+5.3	201	+16.7	260	+50.6	202	+17.1
Case Study B	175	184	+5.2	204	+16.7	264	+50.9	205	+17.1

(Continued)

TABLE 6.3-10 (cont.)

Media and Control Group	Standard Economic Assumptions ¢/bbl	20-year Project Life ¢/bbl	20-year Project Life % Change	Delayed Start-up ¢/bbl	Delayed Start-up % Change	15% DCF ROR ¢/bbl	15% DCF ROR % Change	Stand-Alone Financing ¢/bbl	Stand-Alone Financing % Change
AIR POLLUTION CONTROL									
Particulate and Misc. Air Controls									
Case Studies A & B	29	32	+9.2	33	+12.9	36	+24.1	32	+8.5
Retort Gas Treatment									
Case Study A	140	166	+18.1	192	+36.9	219	+56.1	174	+23.8
Case Study B	104	128	+23.0	153	+47.2	179	+71.7	136	+30.5
TOTAL AIR, CASE STUDY A	170	198	+16.5	225	+32.7	256	+50.6	206	+21.2
TOTAL AIR, CASE STUDY B	134	160	+19.9	187	+39.7	215	+61.1	168	+25.7
WATER POLLUTION CONTROL									
Case Study A	172	179	+3.6	183	+6.3	192	+11.6	181	+4.9
Case Study B	175	181	+3.6	186	+6.2	195	+11.5	183	+4.9

(Continued)

TABLE 6.3-10 (cont.)

Media and Control Group	Standard Economic Assumptions ¢/bbl	Stand-alone Financing at 15% DCF ROR ¢/bbl	Stand-alone Financing at 15% DCF ROR % Change	Combined Assumptions* ¢/bbl	Combined Assumptions* % Change	Combined Assumptions with Stand-alone Financing* ¢/bbl	Combined Assumptions with Stand-alone Financing* % Change
AIR POLLUTION CONTROL							
Particulate and Misc. Air Controls							
Case Studies A & B	29	40	+36.7	49	+67.7	64	+116.4
Retort Gas Treatment							
Case Study A	140	269	+91.3	382	+172.2	502	+257.5
Case Study B	104	226	+116.7	334	+220.2	447	+329.5
TOTAL AIR, CASE STUDY A	170	309	+81.9	431	+154.1	566	+233.1
TOTAL AIR, CASE STUDY B	134	266	+99.1	383	+186.7	511	+282.6
WATER POLLUTION CONTROL							
Case Study A	172	205	+18.8	227	+31.7	256	+48.2
Case Study B	175	208	+18.6	230	+31.5	259	+47.8

* Combined assumptions are 20% increase in fixed capital costs, 15% DCF ROR and delayed start-up.

Note: Percentage changes may not agree with figures calculated from cents per barrel due to rounding.

Source: DRI.

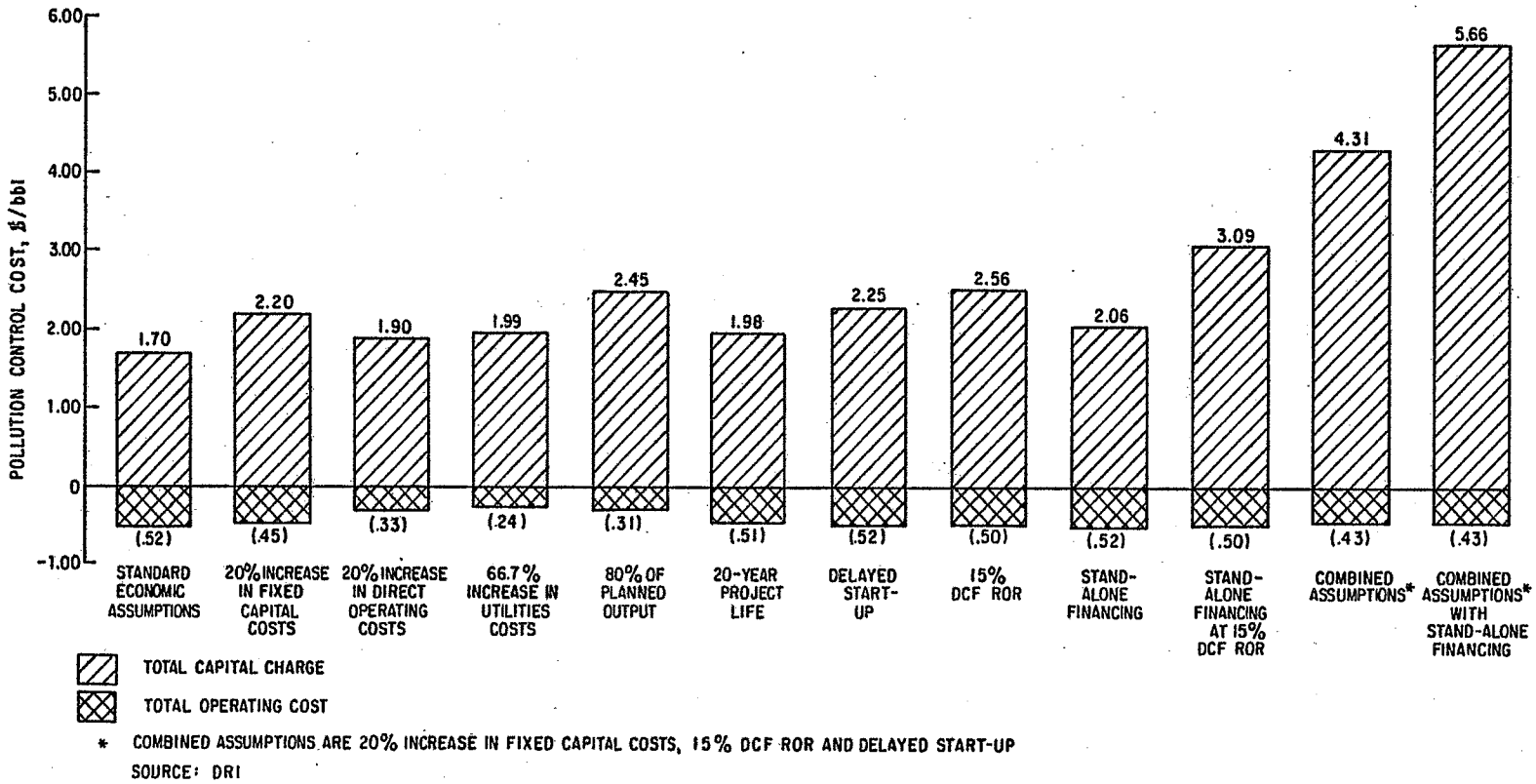

* COMBINED ASSUMPTIONS ARE 20% INCREASE IN FIXED CAPITAL COSTS, 15% DCF ROR AND DELAYED START-UP

SOURCE: DRI

FIGURE 6.3-1 SENSITIVITY ANALYSES FOR CASE STUDY A: TOTAL AIR POLLUTION CONTROL COSTS

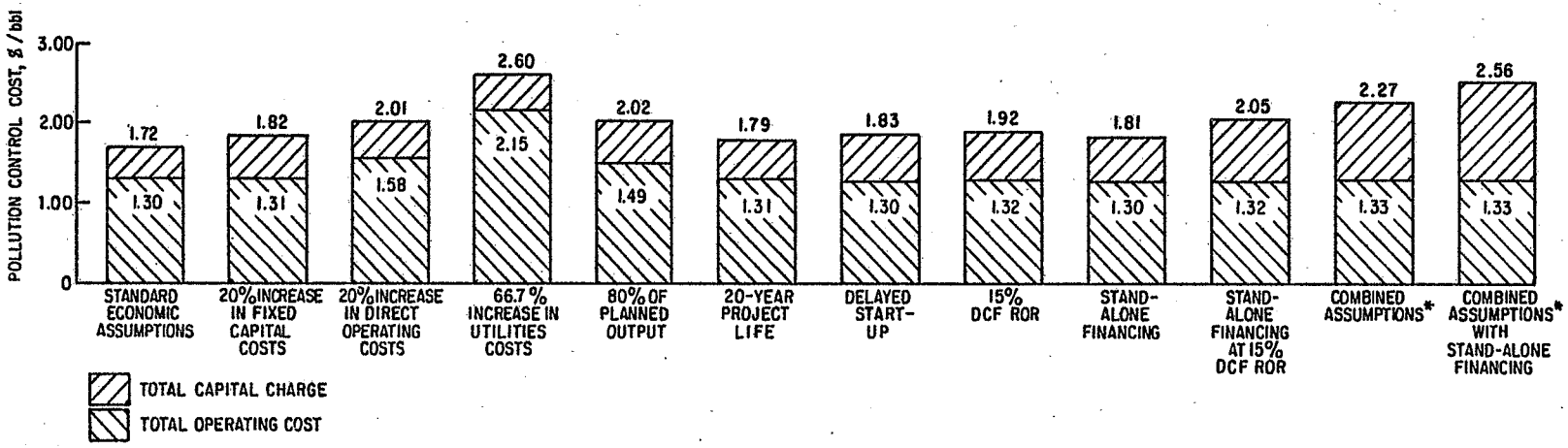

* COMBINED ASSUMPTIONS ARE 20% INCREASE IN FIXED CAPITAL COSTS, 15% DCF ROR AND DELAYED START-UP

SOURCE: DRI

FIGURE 6.3-2 SENSITIVITY ANALYSES FOR CASE STUDY A: TOTAL WATER POLLUTION CONTROL COSTS

barrel (14%) for Case Study B. Total air pollution control costs increase by 15 to 20 cents per barrel, or 12 percent. The costs of water pollution control, which are more operating cost-intensive, increase by 28 to 29 cents per barrel, or 17 percent. Once again, the difference in increase in cost between case studies is small.

66.7% Increase in Utilities Costs--

Operation of various controls requires inputs of electricity and steam. Under standard economic assumptions, electricity is valued at 3 cents per kW-hr, and it is assumed that steam is generated at a cost of $3/MMBtu. The electricity charge of 3 cents per kW-hr may very likely underestimate the true cost of power purchased from the grid (should this prove necessary) as it is a compromise value between plants that can sell power and those that must purchase power (see Section 6.1.1). The MIS-Lurgi facility is expected to be self-sufficient in power, but it is conceivable that excess electricity may be available for export. However, to allow for the possibility that a power plant is not built, a 5 cents per kW-hr rate (a 66.7% increase) was considered. At the same time, the price of steam was also increased by 66.7%, as the standard rate for this input of $3/MMBtu may also prove to be conservative. Three dollars per million Btu is a typical 1980 value used for heat inputs in engineering studies, but no detailed cost evaluation was conducted for this manual. Hence, the steam cost must be considered uncertain.

The results indicate that utility costs constitute a major component of pollution control costs. Water pollution control costs show a dramatic increase, rising 51% (88 to 89 cents per barrel). This increase can be attributed to the large quantities of steam required to operate the kettle evaporators, ammonia recovery unit and retort water stripper. The increases in air pollution control cost are less dramatic. The retort gas treatment cost increases by 19% (28 cents per barrel) for Case Study A and by only 7% (8 cents per barrel) for Case Study B. Case Study A displays the greater increase because the FGD unit uses much larger quantities of steam and electricity than does the Stretford system in Case Study B. Particulate and miscellaneous air control costs increase only 6% (2 cents per barrel). Total air control cost increases by 17% for Case Study A and 7% for Case Study B.

The absolute cost of pollution controls ranges from $1.43 to $1.99 per barrel for air controls and from $2.60 to $2.64 per barrel for water management. The severe increases in the total cost for water pollution control suggest that further analysis of the cost of steam would be desirable. Uncertainty about the cost of electricity does not have a major influence on control costs, so whether the project buys from or sells to the electrical grid is not an important issue.

Eighty Percent of Planned Output--

A frequent problem with pioneer process plants is that they fail to achieve their planned output. Occasionally they produce more. When a plant fails to reach its planned output, the annual fixed capital charges must be

spread over reduced output, and the direct annual operating costs decrease by a lesser proportion than the output because some components (such as maintenance) are virtually unchanged.

For the case of a plant which achieves only 80% of planned output, it was assumed that direct annual operating costs fall to 90% of the full production costs. Production in the start-up years and by-product credits were prorated to 80% of the standard values.

Overall, the results are fairly severe, with the capital-intensive controls showing the greatest increases. Retort gas treatment costs increase by 48 to 60% (63 to 68 cents per barrel). Particulate and miscellaneous air control costs increase by 24% (7 cents per barrel). Total air pollution control cost increases 44% (75 cents) for Case Study A and 52% (69 cents) for Case Study B. The less capital-intensive water pollution control costs increase 17% (30 cents per barrel).

Twenty-Year Project Life--

A shorter project life might occur because of technological obsolescence or some other currently unanticipated reason.* There is little doubt that the oil shale reserves on Tract C-b are adequate for the planned 30-year life. For most projects, extension of the life beyond 20 years has very little effect on the total costs because the later years are so heavily discounted.

This case examines the impact of reducing the life to 20 years. Overall, the effects of this change on control costs are relatively mild. Once again, the more capital-intensive air control costs show the largest increases. The total air pollution control cost increases 17% (28 cents per barrel) for Case Study A and 20% (26 cents per barrel) for Case Study B. The total water pollution control cost increases by only 4% (6 to 7 cents per barrel) for both case studies.

Delayed Start-up--

Because of the time-value of money implicit in the discounting procedure, anything that delays or curtails production raises annual capital charges and, hence, the per-barrel control cost; conversely, anything that accelerates or extends production reduces the costs.

For this analysis, production is halted for two years (Years 3 and 4) and then follows the normal build-up profile displaced by two years. (The project life remains at 30 years, as this is likely to be determined by technological obsolescence.) This profile corresponds to the scenario that the plant initially starts production according to schedule; then, at the end of

---

* A 20-year life was recommended for the oil shale PCTMs. However, because of the exceptional 7-year start-up period, it was considered inappropriate to use a 20-year life for this cost evaluation rather than the 30-year life proposed by the developers of the Cathedral Bluffs project.

Year 2 (which would correspond to only 20 months' actual operation), the plant is closed down because serious operational problems have developed and must be solved, which takes two years. Fortunately, not all the fixed capital has been expended by the end of Year 2; only two MIS retort trains and one Lurgi plant are operational, but construction has started on several others.

The effects of this case are moderately severe. Total air pollution control costs increase by 33 to 40% (53 to 55 cents per barrel). The water pollution control cost for both case studies shows only a small 6% increase (11 cents per barrel), as water management costs are dominated by the large operating cost of the kettle evaporators.

Fifteen Percent DCF ROR--

The minimum acceptable DCF ROR used in a project feasibility study is normally not divulged by developers and, in any event, is influenced by alternative investment opportunities and other factors. However, there is broad confirmation that a rate between 12% and 15% per annum (in constant dollars) is appropriate for evaluating oil shale projects (Denver Research Institute, et al., July 1979; also see Merrow, September 1978). This ROR, which is called a "hurdle rate," is higher than the return that a company actually earns on its capital for a number of reasons. First, it is an unfortunate fact of life that many projects earn less than the projected rate because things do not work out as expected. This is only partly offset by the few that do better than anticipated. Second, project evaluations do not usually include such costs as R and D, exploration and reserve acquisition; also, they may not include recovery of some general corporate expenses.

The single most important factor that influences the required DCF ROR is the perceived riskiness of the project. A high risk project is expected to pass a higher ROR hurdle than a low risk project. Some of the types of risks that might be subjectively taken into account in selecting a minimum acceptable DCF ROR for a mining project in the U.S. include:

- Unproven technology (and, hence, uncertain equipment costs);
- Geologic uncertainty;
- Very large investments in relationship to total corporate assets;
- Rapid inflation in some cost components;
- Long construction and start-up periods;
- Market uncertainty;
- Regulatory uncertainty (leading to delays or added costs); and
- Difficult working conditions or adverse socioeconomic impacts leading to manpower problems.

For any first generation commercial synfuel plant, all the above factors are present, with the possible exception of geologic uncertainty. At this time, most of these factors are strongly present in oil shale projects.

The MIS-Lurgi plant is particularly susceptible to these risks because of its complex technology and extended start-up schedule.

The standard economic assumption is 12% DCF ROR, which is probably the lowest acceptable ROR for a private enterprise shale oil plant with proven technology. For a pioneer plant of this type, industry is likely to require at least 15% ROR, unless it wishes to "buy into" a new industry. Of course, if another party (e.g., the Federal government) were prepared to share the risk in some way, the required ROR would be reduced. Even though some of the risks listed above do not apply to pollution controls, industry does not perceive environmental costs to be separable from the total project. Hence, all components of a project, including pollution controls, must earn the specified DCF ROR.

Increasing the required DCF ROR from 12 to 15% has a substantial effect on the costs. Once again, capital-intensive controls are those most affected--for example, retort gas treatment costs rise by 56 to 72% (75 to 79 cents per barrel). Particulate and miscellaneous air controls increase by 24% (7 cents per barrel). The increase in total air pollution control costs, relative to standard economic assumptions, ranges from 51% for Case Study A to 61% for Case Study B (or 86 and 81 cents, respectively). The total water pollution control cost shows a moderate 12% increase (20 cents per barrel).

Stand-alone Financing--

The term "stand-alone financing" is used to describe a project in which investment tax credits and allowances for depreciation cannot be passed through to a parent company (or companies) which can benefit from them immediately. (These benefits are treated as negative income tax in conducting the alternative "pass-through" form of project evaluation which is used under the standard economic assumptions.) Instead, it is necessary for the project to become profitable before the tax benefits can be obtained. It is difficult to determine when this might occur because it requires a detailed knowledge of the overall project economics; in any event, the timing of the benefits will be affected by the selling price of the shale oil. However, it is known that some of the developers are assuming stand-alone financing for their evaluations since it more closely reflects their tax positions than does pass-through financing.

To determine the approximate effect of substituting stand-alone financing for pass-through financing, it was assumed that no investment tax credit or depreciation could be claimed until the fifth year of production (in which output averages 68% of a full production year). This assumption was based on examination of the cash flow analysis for an MIS plant presented in a recent oil shale tax study (Peat, Marwick, Mitchell & Co., September 1980). It must be emphasized that this assumption is very simplistic (and probably conservative), since the relevant details in the tax study were significantly different from those assumed in this manual. As expected, the effect was the greatest for the capital-intensive control groups. The overall effect was to increase total air pollution control costs by 21 to 26% (34 to 36 cents per barrel) and total water pollution control

costs by 5% (8 to 9 cents per barrel). A more refined calculation might yield substantially greater increases, especially if a low value was used for the price of shale oil, thereby reducing profitability.

The effect of stand-alone financing was also evaluated at 15% DCF ROR, using the same assumptions as above. This probably comes closer to a developer's evaluation. In this case, the increases in costs are quite substantial, ranging from $1.32 to $1.39 per barrel (82 to 99%) for all air controls and 33 cents per barrel (19%) for water pollution control.

Combined Cases--

Two combined cases were evaluated using the components already discussed. However, it is not sufficient to construct these analyses by simply combining the results from the earlier findings, so new analyses were developed. The two cases are as follows:

Combined assumptions

- 20% increase in fixed capital costs
- Delayed start-up
- 15% DCF ROR
- Everything else as standard economic assumptions.

Combined assumptions with stand-alone financing

- 20% increase in fixed capital costs
- Delayed start-up
- 15% DCF ROR
- Stand-alone financing
- Everything else as standard economic assumptions.

These combined cases are intended to be quite plausible adverse scenarios (i.e., 20% increase in fixed capital costs and delayed start-up) looked at from industry's viewpoint (i.e., 15% DCF ROR, with or without stand-alone financing, depending on the company).

The results clearly indicate that, if everything else remained the same, these cases would constitute disasters for the MIS-Lurgi project, since total project costs would respond in a similar way to pollution control costs. The most capital-intensive control group (retort gas treatment) increases in cost by between 172 and 220% ($2.30 to $2.42 per barrel) for regular (pass-through) financing and by between 258 and 330% ($3.43 to $3.62 per barrel) for stand-alone financing. Overall, the increase in total air pollution control cost ranges from 154 to 187% for the regular (pass-through) case and from 233 to 283% for the stand-alone case.

Total water pollution control costs rise approximately 32% for the regular case and 48% for the stand-alone case. The absolute level of

pollution control costs ranges from $3.83 to $4.31 per barrel for all air controls and from $2.27 to $2.30 for water pollution control for the regular (pass-through) case. For the combined assumptions with stand-alone financing, absolute control costs are $5.11 to $5.66 per barrel for air and $2.56 to $2.59 for water. These results represent a more than tripling of the absolute cost of air pollution controls.

Summary--

Returning to Table 6.3-9, it can be seen that total air pollution control costs are roughly 4 to 5% of the assumed $32 per-barrel value for shale oil under the standard economic assumptions. Total water pollution control costs are about 5.5% of the value of the oil.

With respect to air pollution controls, only the last three sensitivity analyses (stand-alone financing at 15% DCF ROR and the two sets of combined assumptions) produce dramatic increases in cost. For stand-alone financing at 15% DCF ROR, total per-barrel costs increase to between 8 and 10% of the shale oil value. For combined assumptions, air control costs increase to between 12 and 14% of the oil value, while for combined assumptions with stand-alone financing, the air control costs rise to between 16 and 18% of the oil value. The more capital-intensive air control costs tend to be greatly affected by the sensitivity analyses which adversely impact annual capital charges. The cost of the MIS absorber/cooler causes the total operating cost for all air controls to be negative, with the result that changes in capital charges are magnified when translated to per-barrel control costs. In all instances, Case Study B remains the lower cost option for air pollution control due to the lower fixed capital and direct annual operating costs associated with the Stretford system, as opposed to the FGD unit used in Case Study A.

Water pollution control costs have proven to be highly sensitive to increases in utility costs. The 66.7% increase in utility costs causes total water pollution control costs to rise from about 5.5% under standard economic assumptions to about 8% of the oil value. This increase can be attributed to the large quantities of steam required for the kettle evaporators, ammonia recovery unit, and retort water stripper. In general, the more operating cost-intensive water pollution control costs are affected little by most of the sensitivity analyses. Only the combined assumptions analyses come close to equaling the cost increases produced by the 66.7% increase in utilities costs. For combined assumptions, water pollution control costs increase to 7% of the oil value, while for combined assumptions with stand-alone financing, the management costs are roughly 8% of the oil value. Water pollution control costs for Case Studies A and B remain virtually identical throughout all of the analyses.

It is interesting to note that water pollution control costs are slightly greater than air pollution control costs under the standard economic assumptions, whereas under the combined assumptions with stand-alone financing, air control costs are roughly double the water control costs. This result highlights the greater sensitivity of air control costs to changes in the engineering costs and economic assumptions. In only one

instance (the 66.7% increase in utility costs) do water pollution control costs become substantially larger than air pollution control costs.

Figures 6.3-1 and 6.3-2 split the control costs into a per-barrel capital charge and a per-barrel total operating cost. These figures effectively illustrate the response of capital-intensive controls (air) vs. operating cost-intensive controls (water) to the different sensitivity analyses. Note that the total operating cost is always negative for air pollution controls.

6.4 DETAILS OF COST ANALYSIS METHODOLOGY

6.4.1 Cost Algorithms

This section provides the algorithms used to calculate total annual and per-barrel control costs and capital charge factors.

Calculation of Total Annual and Per-barrel Control Costs--

The total annual cost (TC) of each item considered for pollution control is the sum of the total annual operating cost (TOC) and the annual capital charge (CC). That is:

$$TC = TOC + CC$$

and

$$TOC = DOC + IOC$$

where:

DOC = Direct annual operating cost
IOC = Indirect annual operating cost

and

$$CC = (FCC \times RF) + (WC \times RW)$$

where:

FCC = Fixed capital cost
WC = Working capital
RF = Fixed charge factor
RW = Working capital charge factor

The cost per barrel (CPB) is the total annual cost divided by the normal annual production, i.e.:

$$CPB = TC \div (BPCD \times 365)$$

where:

BPCD = Barrels per calendar day

This corresponds to a 100% operating factor in normal years, as explained earlier.

The derivation of each cost component is explained below.

Direct annual operating cost. DOC is a data input derived from the engineering cost analysis. It is the annual cost for a normal year and is taken from one of the basic data Tables 6.1-2 through 6.1-4 or 6.2-3.

Indirect annual operating cost. The indirect annual operating cost (IOC) is calculated as follows:

$$IOC = TIA + ESC - STC - BP$$

where:
TIA = Annual tax and insurance allowance
ESC = Annual extra start-up costs (levelized--see below)
STC = Annual severance tax credit (levelized--see below)
BP = Annual value of by-products

BP is an input generated from stream data and shown in one of the tables in Section 6.3, and:

$$TIA = 0.03 \times FCC$$

$$ESC = (0.03 \times FCC + 0.50 \times DOC) \times LFAC1$$

$$STC = 0.04 \times [(DOC + ESC + TIA - BP) + 0.05 \times FCC] \times LFAC2$$

LFAC1 and LFAC2 are levelizing factors that spread ESC and STC uniformly over all units of production. LFAC2 also makes adjustments for the severance tax exemptions allowed for low production and allows for the reduced rate for underground production. These factors are as follows:

$$LFAC1 = \frac{\frac{0.10}{1+r} + 0.20\left[\frac{1}{(1+r)^2} + \frac{1}{(1+r)^3} + \frac{1}{(1+r)^4}\right] + 0.10\left[\frac{1}{(1+r)^5} + \frac{1}{(1+r)^6} + \frac{1}{(1+r)^7}\right]}{\frac{0.02}{1+r} + \frac{0.10}{(1+r)^2} + \frac{0.28}{(1+r)^3} + \frac{0.47}{(1+r)^4} + \frac{0.68}{(1+r)^5} + \frac{0.77}{(1+r)^6} + \frac{0.80}{(1+r)^7} + \left[\frac{(1+r)^{-7} - (1+r)^{-N}}{r}\right]}$$

where: N = last year of production (= 30 in most analyses)
r = Discount rate = DCR ROR

This levelizing factor distributes the seven annual components of the extra start-up cost uniformly over each unit of production throughout the project's entire life.

$$LFAC2 = \frac{BPCD - 10{,}000}{BPCD} \times \left(1 - \tfrac{1}{4}\left[\frac{69{,}040}{117{,}000}\right]^{*}\right)$$

$$\times \frac{\frac{1}{8} \cdot \frac{0.47}{(1+r)^4} + \frac{1}{2} \cdot \frac{0.68}{(1+r)^5} + \frac{3}{4} \cdot \frac{0.77}{(1+r)^6} + \frac{0.80}{(1+r)^7} + \left[\frac{(1+r)^{-7} - (1+r)^{-N}}{r}\right]}{\text{[Same denominator as in LFAC1]}}$$

where: BPCD = Barrels per calendar day

---

* 69,040 ÷ 117,000 is the proportion of below-ground production.

A numerical example of a levelizing calculation is given in Section 6.4.3.

Capital costs. Fixed capital cost (FCC) is an input taken from one of the data tables. Working capital (WC) is calculated as follows:

$$WC = 1/12 \times TOC + 1/4 \times BP$$

Capital Charge Factors--

The fixed charge factor equation is:

$$RF = \frac{\sum_{n=J}^{N} [(1 + r)^{-n} \times (K_n - T \times D_n - C_n)]}{(1 - T) \sum_{n=1}^{N} [(1 + r)^{-n} O_n]}$$

where:

K_n = Capital expenditure in year n ($\Sigma K_n = 1.000$)

C_n = Investment credit in year n

D_n = Depreciation in year n

O_n = Operating income in year n ($O_n = 1.000$ in a normal year)

r = DCF ROR (= discount rate)

T = Tax rate

N = Last year of project

J = First year of project (i.e., -3)

Note that the first year of production is Year 1.

The same equation is used to determine the working capital charge factor (RW), except that the D_n and C_n terms are omitted.

6.4.2 Example Calculation of a Fixed Charge Factor

Table 6.4-1 provides an example of the calculation of a fixed charge factor. The data used are for MIS surface facilities, using standard economic assumptions (see Table 6.2-2).

The following is an explanation of the calculations in the table. Expenditures are shown negative, while income (and taxes avoided) is shown positive. Column [2] is a schedule of capital expenditures to be made over a seven-year period, totaling an arbitrary $1,000. (Unit value is used in the equation above.) Columns [3], [4], and [5] deal with allowances associated with this capital expenditure. Column [3] is a schedule of depreciation, commencing in Year 1 when the first part of the asset is placed into service. The irregular series in this column occurs because there are five retort

TABLE 6.4-1. EXAMPLE OF FIXED CHARGE FACTOR CALCULATION
(Standard Economic Assumptions, MIS Retort Timing)

		Allowances			Operating Income		Discount	Net Present Values			
Year [1]	Gross Capital [2]	Depreciation Amount [3]	Depreciation Value @ 48% Tax [4]	Investment Tax Credit [5]	Gross [6]	Net After 48% Tax [7]	Factors at 12% [8]	After-tax Income* [9]	Depreciation Allowance [10]	Investment Tax Credit [11]	Capital [12]
-2	(100)	0.00	0.00	20	0.00x	0.00x	1.2544	0.0000x	0.00	25.09	(125.44)
-1	(150)	0.00	0.00	30	0.00x	0.00x	1.1200	0.0000x	0.00	33.60	(168.00)
0	(200)	0.00	0.00	40	0.00x	0.00x	1.0000	0.0000x	0.00	40.00	(200.00)
1	(150)	47.06	22.59	30	0.02x	0.010x	0.8929	0.0089x	20.17	26.79	(133.93)
2	(200)	44.12	21.18	40	0.10x	0.052x	0.7972	0.0415x	16.88	31.89	(159.44)
3	(150)	64.71	31.06	30	0.28x	0.146x	0.7118	0.1039x	22.11	21.35	(106.77)
4	(50)	83.83	40.24	10	0.47x	0.244x	0.6355	0.1551x	25.57	6.36	(31.78)
5	0	101.47	48.71	0	0.68x	0.354x	0.5674	0.2009x	27.64	0.00	0.00
6	0	94.12	45.18	0	0.77x	0.400x	0.5066	0.2027x	22.89	0.00	0.00
7	0	86.77	41.65	0	0.80x	0.416x	0.4523	0.1882x	18.84	0.00	0.00
8	0	79.42	38.12	0	1.00x	0.520x	0.4039	0.2100x	15.40	0.00	0.00
9	0	72.07	34.59	0	1.00x	0.520x	0.3606	0.1875x	12.47	0.00	0.00
10	0	64.72	31.07	0	1.00x	0.520x	0.3220	0.1674x	10.00	0.00	0.00
11	0	57.36	27.53	0	1.00x	0.520x	0.2875	0.1495x	7.91	0.00	0.00
12	0	50.00	24.00	0	1.00x	0.520x	0.2567	0.1335x	6.16	0.00	0.00
13	0	42.63	20.46	0	1.00x	0.520x	0.2292	0.1192x	4.69	0.00	0.00
14	0	35.28	16.93	0	1.00x	0.520x	0.2046	0.1064x	3.46	0.00	0.00
15	0	27.93	13.41	0	1.00x	0.520x	0.1827	0.0950x	2.45	0.00	0.00
16	0	20.58	9.88	0	1.00x	0.520x	0.1631	0.0848x	1.61	0.00	0.00
17	0	13.23	6.35	0	1.00x	0.520x	0.1456	0.0757x	0.92	0.00	0.00
18	0	8.82	4.23	0	1.00x	0.520x	0.1300	0.0676x	0.55	0.00	0.00
19	0	4.41	2.12	0	1.00x	0.520x	0.1161	0.0604x	0.25	0.00	0.00
20	0	1.47	0.71	0	1.00x	0.520x	0.1037	0.0539x	0.07	0.00	0.00
21	0	0.00	0.00	0	1.00x	0.520x	0.0926	0.0481x	0.00	0.00	0.00
22	0	0.00	0.00	0	1.00x	0.520x	0.0826	0.0430x	0.00	0.00	0.00
23	0	0.00	0.00	0	1.00x	0.520x	0.0738	0.0384x	0.00	0.00	0.00
24	0	0.00	0.00	0	1.00x	0.520x	0.0659	0.0343x	0.00	0.00	0.00
25	0	0.00	0.00	0	1.00x	0.520x	0.0588	0.0306x	0.00	0.00	0.00
26	0	0.00	0.00	0	1.00x	0.520x	0.0525	0.0273x	0.00	0.00	0.00
27	0	0.00	0.00	0	1.00x	0.520x	0.0469	0.0244x	0.00	0.00	0.00
28	0	0.00	0.00	0	1.00x	0.520x	0.0419	0.0218x	0.00	0.00	0.00
29	0	0.00	0.00	0	1.00x	0.520x	0.0374	0.0194x	0.00	0.00	0.00
30	0	0.00	0.00	0	1.00x	0.520x	0.0334	0.0174x	0.00	0.00	0.00
	(1,000)	1,000.00	480.00	200				2.7168x	220.04	185.08	(925.36)

* After-tax income is before depreciation allowance and investment tax credit.

Source: DRI.

trains, placed into service in four different years. Column [4] gives the value of the depreciation allowed to the company. This value is the income tax not incurred as a consequence of the depreciation deduction, and it is 48% of Column [3]. Column [5] is the 20% investment tax credit available in each year a capital expenditure is made. (This is a direct credit against tax and does not have to be multiplied by the tax rate.)

Column [6] represents the income stream resulting from the $1,000 investment (Column [2]). Income in a normal, full production year is designated by "1.00x." Since income is proportional to production, and production in the start-up years is less than full production, the first seven years of income are appropriately reduced, e.g., 0.02x in Year 1, 0.10x in Year 2, 0.28x in Year 3, etc. Column [7] shows the residual income to the company after income tax is paid on the income in Column [6].

The 12% discount factors in Column [8] are used to generate the present values in Columns [9], [10], [11] and [12]. After summing the columns of present values of after-tax income, depreciation allowance, investment tax credit, and capital expenditure, an equation is constructed to determine the gross income which must be generated by the $1,000 of capital to achieve a 12% DCF ROR; thus:

$$2.7168x = 925.36 - 220.04 - 185.08$$

$$[9] = [12] - [10] - [11]$$

therefore: $$x = \frac{520.24}{2.7168} = 191.49$$

(x represents the gross income in a full production year that is necessary to provide the specified DCF ROR, 12%, on $1,000 of fixed capital.)

hence: $$RF = \frac{191.49}{1,000} = 19.15\%$$

6.4.3 Cost Levelizing Calculations

While most direct operating costs vary in proportion to plant output, the operating costs for solid waste management do not. For example, the cost of the runoff collection system is a uniform annual cost, starting in Year 1 and finishing in Year 25. To spread these costs in a pattern consistent with production over the 30-year project life, these operating costs are transformed into an annual figure for a normal year, and this figure can then be used with the standard methodology above. This is done by calculating a "levelized cost" for a normal year's production. This technique is also used to spread the extra start-up cost and severance tax credit uniformly over shale oil production.

A "levelizing factor" is used to make this transformation. The following equation shows how a levelizing factor is used to arrive at a levelized cost (i.e., a stream of payments having the same profile as production), given the present value of a nonuniform stream of payments:

$$\text{Levelized Cost} = \frac{\Sigma(\text{Present Values of a Cost Stream})}{\text{Levelizing Factor}}$$

By dividing the levelized cost by a normal year's output, a cost per unit of production is derived.

The equation for calculating the levelizing factor (LF) is:

$$LF = PVFA_{(r,N)} - \sum_{n=1}^{S} (PVF_{(r,n)} \times [1-L_n])$$

where:

- LF = Levelizing factor
- $PVFA_{(r,N)}$ = Present value factor of a uniform series of payments for N years
- $PVF_{(r,n)}$ = Present value factor of a single payment in year n
- r = Discount Rate = DCF ROR
- N = Number of production years
- S = Number of years in the start-up period
- n = Any specific year in the start-up period
- L_n = The proportion of normal output during any given start-up year; the series of L_n values constitutes the "start-up profile"

The second term on the right-hand side of the above equation is an adjustment to the uniform series represented by the first term. The complement of the L_n figure (i.e., that portion of each start-up year which is less than full production) is discounted, summed, and then subtracted from the uniform series. Since the start-up years have high present values, the effect of subtracting this term has a substantial impact on the levelizing factor. Because the levelizing factor is the denominator in the equation which determines the levelized cost (and, hence, the unit cost), this adjustment term raises the per-barrel cost.

<u>Cost Levelizing Example</u>--

To illustrate the concept of cost levelization, a calculation of the 12% DCF ROR levelizing factor used for this manual is presented below:

Year	Proportion of Normal Output (L_n)	PVF @ 12%	$(1-L_n)$ x PVF
1	0.02	0.8929	0.8750
2	0.10	0.7972	0.7175
3	0.28	0.7118	0.5125
4	0.47	0.6355	0.3368
5	0.68	0.5674	0.1816
6	0.77	0.5066	0.1165
7	0.80	0.4524	0.0905
8 ⋮ 30	1.00	3.4914	0.0000
		8.0552	2.8304

Hence: $LF_{(r=12\%,\ N=30\ yrs)} = 8.0552 - 2.8304 = 5.2248$

(Note that all present values are expressed with respect to Year 0.)

This factor is the same as the denominator in the levelizing expressions LFAC1 and LFAC2.

As an illustration of a levelizing calculation, consider the runoff collection costs. The "engineering cost" (Table 6.1-5) is $34,000 per year for Years 1 through 25.

The present value of these costs, expressed with respect to Year 0, is calculated as follows:

Year	Expenditure	PVF @ 12%	Present Values
1	$34,000	0.8929	$ 30,359
2	34,000	0.7972	27,105
3	34,000	0.7118	24,201
⋮	⋮	⋮	⋮
25	34,000	0.0588	1,999
			$266,665

Thus, $266,665 is the present value of all the runoff collection costs. To turn this into a cost that is distributed uniformly with respect to output, it must be divided by $LF_{(r = 12\%,\ N = 30\ years)}$.

$$\text{Therefore, Levelized Cost} = \frac{266,665}{5.2248} = \$51,038$$

Thus, $51,038 (rounded to $51,000 in Table 6.2-3) is the annual cost in a normal production year that is equivalent to the irregular cost profile

given above. This direct annual operating cost can be used in conjunction with the algorithms given in Section 6.4.1 for calculation of total annual control cost and per-barrel control cost, whereas the irregular stream of expenditures from which it was derived cannot be used with the standard cost methodology.

In summary, cost levelization redistributes a cost series that is not proportional to production over the project life in such a way as to yield an equivalent series that is proportional to production and has the same economic value.

SECTION 7

DATA LIMITATIONS AND RESEARCH NEEDS

A number of limitations associated with stream characterization and pollution control technology performance were identified in the data base during the preparation of the Pollution Control Technical Manual for the combined MIS and Lurgi oil shale retorting processes. It is important that users of this manual be aware of these limitations. It is also important that these limitations be addressed prior to development of an oil shale facility of the magnitude analyzed in this manual and proposed by Cathedral Bluffs Shale Oil Company (e.g., 62,000 TPSD oil shale mined and 117,000 BPSD shale oil produced).

7.1 DATA LIMITATIONS

The descriptions of the MIS and Lurgi retorting processes and information regarding applicable control technologies, performance, and costs used to prepare this manual were obtained from reports on the operation of pilot MIS and Lurgi retorts, vendor descriptions, and engineering calculations used in conjunction with experience transferred from analogue industries such as the petroleum, utility, and mineral mining industries which utilize similar control technologies. Until "hands on" experience is obtained from commercial-scale oil shale operations, these sources constitute the best available data base. However, the limitations of this data base should be clearly understood. Pilot retorts were built and operated primarily to improve process design and not for demonstrating operation of a commercial-sized retort with attendant pollution control systems. Many pollution control systems have never been pilot tested with an oil shale retort. Even for those control systems that were pilot tested, often the data collected have been very limited.

To date, the only MIS retorting experience is comprised of the operation of one small (Room 3E) and three large-sized (Rooms 4, 5 and 6) MIS experimental retorts processed by Occidental Oil Shale, Inc., and the data from some laboratory-scale testing. Two more large-sized retorts (Rooms 7 and 8) have been processed recently, but the new data are not yet available. Although the large experimental retorts have been comparable in size to that planned for the commercial retorts, they have been burned on an individual basis (with the exception of Rooms 7 and 8 which have been processed jointly). By contrast, 96 retorts in an operating panel will be processed simultaneously for the commercial-scale production. A scale-up of this magnitude is likely to involve some design modifications which could produce changes in the stream compositions, flows, and performance of the control technologies.

The primary experience with Lurgi retorting involves two pilot plants (5 tons/day and 25 tons/day) and several laboratory-scale retorts operated in West Germany during the past few years. Shales from Tract C-b, Tract C-a, and the Colony mine in Colorado have been processed recently, and the available data from these tests have been used in this manual. A full-sized Lurgi retort is expected to process 8,800 TPSD of raw shale, and seven of these retorts will be needed to produce 48,000 BPSD of shale oil. Again, this represents an enormous scale-up of the pilot retorts; therefore, improvements in the retort design and operating parameters may be inevitable, resulting in some uncertainty about the performance of control technologies.

Variations in the grade of the shale also introduce modifications to the operating parameters and, hence, the data. The MIS field retorts have been operated at Logan Wash, while the commercial operation is planned for Tract C-b, which is located several miles north of the Logan Wash site. The grade of shale at the two sites is significantly different--15.6 gpt at Logan Wash compared to 26.7 gpt at Tract C-b. Furthermore, the mineralogy of the two sites is different, i.e., Tract C-b is higher in pyrites. During a recent MIS burn at Tract C-a, which is located in the vicinity of Tract C-b, up to 4% by volume H_2S and 1,500 ppmv COS were measured in the off-gas (Sklarew, et al., February 1981). It is likely that the shale at Tract C-b may also produce an off-gas containing higher amounts of sulfur compounds than measured at Logan Wash. Again, this may translate into an uncertainty in control performance.

Given the potential problems associated with process scale-up and variations in the quality of the shale, a linear extrapolation of the data from pilot operations may not be entirely applicable to a commercial operation or to other development sites; therefore, a direct transfer of the information must be made with caution. Also, the MIS retorting operations will likely be more sensitive to site-specific hydrologic conditions.

It should also be noted that, to date, the MIS and Lurgi pilot plants have primarily consisted of the retorts only. The Room 6 MIS experiment did include an absorber/cooler to recover light oils from the off-gas, but it was sized to handle only 15% of the flow from a single MIS retort. A thermosludge boiler, or kettle evaporator, was also employed to raise steam from the retort water. Other pollution control technologies (e.g., FGD, Stretford, Phosam-W, steam stripper) that form the basis for a complete plant as proposed by Cathedral Bluffs (see Sections 2 and 3) have not yet been tested with the MIS and Lurgi processes (the recent Room 7 and 8 burn at Logan Wash included testing of the Stretford process and steam stripper, but data on these technologies are not yet available). Therefore, actual control technology performance and compatibility with the two retorting processes have not been documented.

The fact that the processing streams have been measured in terms of major constituents only is an additional limitation. Information on minor constituents, which may be of concern from an operational as well as an environmental viewpoint, is not well documented. Examples of such constituents include regulated and nonregulated pollutants (e.g., trace

elements, specific organics, inorganics), all of which can have an impact upon the choice and operation of downstream control.

Assessing the limitations of existing data sources was an important by-product resulting from the preparation of this manual. Since the best available information on each subject was selected, this manual represents the best currently available data base on the MIS and Lurgi processes; also, within the limitations of available data, it accurately estimates the control efficiencies achievable.

7.2 RESEARCH NEEDS

The limited potential for the transfer of control technology from pilot and semi-works retorting tests and from analogue industries to commercial oil shale operations emphasizes a genuine need for research in certain areas of oil shale processing and pollution control. This need is strengthened by the fact that, even with several years of experience, the oil shale industry is still in an early state of development.

While it is recognized that further research will be essential in all phases of oil shale commercialization, the major areas of data uncertainty regarding characterization of streams and control technology performance, as revealed during preparation of the MIS-Lurgi PCTM, are identified in Table 7.1-1. The status of the information is presented according to the development stage of the source and technology. The specific information sources are also identified. A reliability or confidence ranking is assigned to the data for each stream and technology based on a subjective evaluation of the direct applicability of the data to a commercial-scale MIS-Lurgi facility. Some salient features and caveats in the information base are noted, and specific research needs are identified to overcome some of the data limitations.

TABLE 7.1-1. DATA LIMITATIONS AND RESEARCH NEEDS

Streams and Control Technologies (Figure No.)	Pollutant Controlled	Information Status[a]	Information Sources[b]	Reliability[c]	Remarks	Research Needs
Particulate Emissions	--	I	1	2	The particulate emission estimates have been obtained from the Cathedral Bluffs PSD permit application, and they have been calculated by using dust emission factors for different applications. Actual source testing is not documented.	Data from actual source testing need to be obtained.
					Estimates have been made for several other criteria pollutants, but actual source testing is not documented.	Data on trace elements and criteria pollutants need to be obtained from actual source testing.
Baghouses (3.3-3)	Particulates (point source)	I	1	2	The technology is mentioned in the PSD application as BACT for point source particulate control, but the operating experience with the MIS-Lurgi process streams is not documented.	The operating experience with the MIS-Lurgi streams needs to be obtained.
		G,H	17,18	1	The technology is widely used in other industries. The claimed particulate removal efficiency of 99.5% appears reasonable.	The technology transferability needs to be verified.
Water and Foam Sprays	Particulates (fugitive)	I	1	2	The technologies are mentioned in the PSD application as BACT for fugitive particulate control, but the operating experience with the MIS-Lurgi process streams is not documented.	The operating experience with the MIS-Lurgi streams needs to be obtained.
		G,H	17,18	1	The technologies are widely used in other industries. The claimed particulate removal efficiencies of 85-98.5% for the foam sprays and 50% for the water sprays appear to be reasonable.	The technology transferability needs to be verified.
MIS Retort Gas (3.3-7, 3.3-8)	--	C,I	1,6	3	The retort gas data from the pilot experiments at Logan Wash have been extrapolated for the commercial operation at Tract C-b. Any MIS retorting experience with the Tract C-b shale is not documented.	The actual retort gas data from the Tract C-b oil shale need to be obtained.

(Continued)

TABLE 7.1-1 (cont.)

Streams and Control Technologies (Figure No.)	Pollutant Controlled	Information Status[a]	Information Sources[b]	Reliability[c]	Remarks	Research Needs
					Sulfur species, other than H_2S, have been estimated to be present in the gas, but the actual concentrations may vary due to the different mineralogy of Tract C-b.	Sulfur species need to be measured in an actual MIS retort gas from the Tract C-b shale.
					Non-NH_3 nitrogen compounds are not reported.	The presence or absence of organic amines, cyanides, etc., needs to be verified.
Absorber/Cooler (3.3-8)	NH_3, Light Oils	C	1,6	3	The technology was tested for removal of NH_3 and light oils in the MIS retort gas from the Room 6 burn at Logan Wash. The unit handled only 15% of the gas flow from the retort.	Scale-up data need to be obtained.
		A,G,I	17	2	Water scrubbing of gases is a commonly employed technology in many industries. Its use in the MIS retort gas treatment is a special application, primarily involving the equipment design. Computer modeling indicates that the claimed NH_3 removal efficiency is achievable.	
					Excessive cooling can result in the removal of the condensable hydrocarbons to a level such that the retort gas may become noncombustible.	The relationship between the gas cooling, ammonia removal efficiency, and heating value of the gas needs to be studied.
Stretford (3.3-9)	H_2S	C,I	3,4,5,6	3	The technology was mentioned as the primary MIS retort gas cleanup process in the modified DDP. A PSD permit was issued.	
					The operating experience with the MIS retort gas is not yet documented, but the technology is being tested in the Room 7 and 8 experiments.	Data from the ongoing Room 7 and 8 burns need to be obtained.
		G,H	17,18	3	The technology is used commercially in other industries, but at a much smaller scale than that required for the treatment of the MIS retort gas.	The technology transferability needs to be verified and the scale-up data need to be obtained.

(Continued)

TABLE 7.1-1 (cont.)

Streams and Control Technologies (Figure No.)	Pollutant Controlled	Information Status[a]	Information Sources[b]	Reliability[c]	Remarks	Research Needs
					Non-H_2S sulfur compounds may not be recovered efficiently with the technology.	The control efficiencies for COS, CS_2, mercaptans, etc., need to be determined.
					Excessive amounts of heavy organics tend to deteriorate the reagents and the quality of the sulfur product.	The impact on the efficiency of H_2S removal due to condensable organics in the feed needs to be quantified.
					Non-NH_3 nitrogen compounds may also degrade the reagent.	The impact of organic amines, HCN, etc., on the Stretford chemicals needs to be quantified.
					According to the vendor information, an H_2S removal efficiency to 30 ppmv in the treated gas is achievable with a single absorber.	
Lurgi Retort Gas (3.3-6)	--	C,I	1,7	3	The operating experience with a 25-ton/day pilot Lurgi retort, using the Tract C-b oil shale, has been documented.	Scale-up data need to be obtained.
					H_2S and SO_2 have been estimated to be present in the gas, but other sulfur species are not reported.	The presence or absence of other sulfur species needs to be verified.
					Non-NH_3 nitrogen compounds are not reported.	The presence or absence of organic amines, cyanides, etc., needs to be verified.
Stretford (3.3-9)	H_2S	G,H,I	17,18	3	The operating experience with the Lurgi retort gas is not documented, but the technology is used commercially in other industries at a scale necessary to treat the Lurgi gas (separate absorbers are used in this manual to treat the MIS and Lurgi retort gases).	The technology transferability needs to be verified.
					See other remarks under MIS Retort Gas.	See other research needs under MIS Retort Gas.

(Continued)

TABLE 7.1-1 (cont.)

Streams and Control Technologies (Figure No.)	Pollutant Controlled	Information Status[a]	Information Sources[b]	Reliability[c]	Remarks	Research Needs
Boiler Flue Gas (3.3-11)	--	I	1	2	The information on the flue gas composition has been obtained from the Cathedral Bluffs PSD application, and it is calculated from the quality and quantity of the fuels used in the steam boilers.	The actual flue gas composition, especially the NOx content, needs to be determined.
FGD (3.3-12)	SO_2	I	1	3	A lime/limestone scrubbing system at 95 wt% SO_2 removal efficiency has been included in the PSD application.	
		G,H	17,18	2	The operating experience with the retort gases is not documented, but the technology is used commercially in many flue gas desulfurization applications at a scale necessary for the MIS-Lurgi application.	The technology transferability needs to be verified.
					The vendor information indicates that SO_2 can be removed to a level of 50 ppmv in the desulfurized gas. This removal efficiency is somewhat lower than the 95% removal (by weight) indicated in the PSD application.	The removal efficiency for SO_2 needs to be determined for an actual flue gas from MIS-Lurgi retort gases.
Lurgi Flue Gas (3.3-4)	--	C,I	1,7	3	The operating experience with a 25-ton/day pilot Lurgi retort, using the Tract C-b oil shale, has been documented.	Scale-up data need to be obtained.
					The SO_2 content of the flue gas is reported to be 20 ppmv. This amount is judged to be too low based on the material and elemental balances. Irreversible adsorption of the SO_2 on the processed shale to cause low SO_2 emissions is suggested as an explanation in both references.	The efficiency of SO_2 adsorption on the processed shale needs to be determined.
					The NOx content of the flue gas is reported to be 100 ppmv. Again, based on the material and elemental balances, this amount is judged to be too low.	The actual NOx content of the flue gas needs to be determined.

(Continued)

TABLE 7.1-1 (cont.)

Streams and Control Technologies (Figure No.)	Pollutant Controlled	Information Status[a]	Information Sources[b]	Reliability[c]	Remarks	Research Needs
Electrostatic Precipitator (3.3-4)	Particulates	C,I	1,7	3	An electrostatic precipitator to remove the particulates from the flue gas has been suggested in the PSD application.	
					The operating experience with the Lurgi pilot plant has been obtained.	Scale-up data need to be obtained.
		G,H	17,18	2	The technology is used commercially in the utility industry at a scale necessary to treat the Lurgi flue gas.	The technology transferability needs to be verified.
					The particulate removal efficiency depends upon the resistivity of the processed shale and the temperature of the flue gas stream.	The effect of variations in the shale grade on the resistivity of the particulates needs to be quantified.
					Moisture in the flue gas generally decreases the resistivity, thus increases the control efficiency.	The relationship between the moisture content of the flue gas and control efficiency needs to be studied.
Fugitive Hydrocarbons	--	I	1,6,7	2	The fugitive hydrocarbons are estimated from the properties of the oil products.	
Floating Roof Tanks	Hydrocarbons	I	1	2	The double-sealed, floating roof storage tanks for volatile product storage have been specified in the PSD application.	
		G,H	17,18	1	The floating roof storage tanks are used commercially for oil storage.	
Maintenance	Hydrocarbons	G,H	17,18	1	Routine maintenance of the valves, pumps, etc., is a commonly used operational practice to control the hydrocarbon leakage.	
Catalytic Converters	Hydrocarbons, CO	G,H	17,18	1	All diesel-powered machinery is equipped with catalytic converters to control hydrocarbon and CO emissions. The catalytic converters are a commonly used technology.	

(Continued)

TABLE 7.1-1 (cont.)

Streams and Control Technologies (Figure No.)	Pollutant Controlled	Information Status[a]	Information Sources[b]	Reliability[c]	Remarks	Research Needs
Retort Water (3.3-7)	--	C,I	6	3	The information on the retort water composition has been obtained from the Room 6 burn at Logan Wash.	Scale-up data need to be obtained.
					The Logan Wash experimental site and Tract C-b commercial site are significantly different with respect to the mineralogy and hydrology.	The impact of differences in the shale grade and site hydrology on the quality and quantity of the retort water needs to be quantified.
Oil/Water Separator (3.3-7)	Oils and Greases	C,G,H	6,17,18	2	An API oil/water separator was used to remove oils and greases from the Room 6 retort water. The technology is a commonly used practice in other industries.	Scale-up data need to be obtained and/or the technology transferability needs to be verified.
					Oil emulsions may not be controlled by the separator. Addition of chemicals or heating the water may be necessary to break the emulsion.	The oil emulsion problem with the oil shale retort waters needs to be determined.
Multimedia Gravity Filtration	Suspended Matter	I	8	2	The operating experience with the MIS retort water is not documented, but the technology is used commercially in other industries.	The technology transferability needs to be verified.
					The efficiency of filtration may be affected by the colloids and oil emulsions.	The feasibility and efficiency of the technology for oil shale process waters, especially retort waters, need to be determined.
Steam Stripper (3.3-7)	Volatile Gases (organics, H_2S, NH_3)	B,I	1,9	3	Bench-scale batch stripping of the volatiles in the retort water from the Room 6 burn has been attempted.	Scale-up data need to be obtained, and the efficiency of removing the volatiles on a continuous basis needs to be evaluated.
					Excessive amounts of dissolved organics may cause foaming in the stripper.	The potential of foaming due to the oil emulsions needs to be quantified.
		G	17	2	Steam stripping is a commonly used technique for controlling the dissolved volatile components in wastewaters.	The technology transferability needs to be verified.

(Continued)

TABLE 7.1-1 (cont.)

Streams and Control Technologies (Figure No.)	Pollutant Controlled	Information Status[a]	Information Sources[b]	Reliability[c]	Remarks	Research Needs
Kettle Evaporator (3.3-11)	Dissolved Organics and Inorganics	C,I	6	3	The operating experience has been obtained from the Room 6 pilot burn.	Scale-up data need to be obtained.
		G,H	17,18	2	The technology is used commercially in other industries.	The technology transferability needs to be verified.
					High TDS feedwaters can cause problems in the blowdown system.	The blowdown problem due to high salt concentration in the feed needs to be quantified.
		I	17,18	3	The technology is commonly used in municipal wastewater treatment. An activated air sludge system was used in this manual because it is faster and less susceptible to toxicity problems.	
Reverse Osmosis (RO) (5.2-16)	Dissolved Organics (and inorganics)	B	9	4	Some laboratory studies on RO treatment of in situ retort waters have been carried out successfully.	Scale-up data need to be obtained.
		I	17,18	3	The technology is used commercially in other applications. In this manual, the technology is applied to the stripped retort water for further reduction of the dissolved organics. Approximately 95% reduction in the organic matter is judged to be achievable.	The technology transferability needs to be verified.
Carbon Adsorption (CA) (5.2-18)	Dissolved Organics	G,H,I	10,17,18	3	The technology is used commercially in the treatment of industrial and municipal wastewaters. The operating experience with oil shale wastewaters is not documented. In this manual, the technology is used for cleaning the stripped gas condensates and the retort water that has already been treated by RO. Approximately 50% reduction in the organics is judged achievable with this technology.	The feasibility and efficiency of CA treatment for the MIS-Lurgi process waters need to be evaluated and/or the technology transferability needs to be verified.

(Continued)

TABLE 7.1-1 (cont.)

Streams and Control Technologies (Figure No.)	Pollutant Controlled	Information Status[a]	Information Sources[b]	Reliability[c]	Remarks	Research Needs
Wet Air Oxidation (WAO) (5.2-20)	Organics	G,H,I	8,11,17,18	3	The technology is used commercially in other industries. The operating experience with oil shale wastewaters is not documented. In this manual, the technology is used for the destruction of organics in the RO concentrate. Approximately 80% of the organics are judged to be destructable by this technology.	The feasibility and efficiency of WAO treatment for the MIS retort water need to be evaluated and/or the technology transferability needs to be verified.
Solar Evaporation Pond (5.2-13)	Dissolved Inorganics	G,H,I	17	2	The technology is commonly used for concentrating the wastewaters. Solar energy incident on an open evaporation pond is used to evaporate the wastewater. The precipitated salts may be removed periodically. In this manual, the technology is used for further concentration of the material rejected by RO. Sufficient storage capacity and surface area are provided to hold the wastewater without overflowing during the low-evaporation, high precipitation periods.	Characterization and disposal approaches for the precipitated salts need to be evaluated.
MIS Gas Condensate (3.3-8)	--	C,I	1,6,9	3	The composition of the gas condensate from the Room 6 burn has been determined.	Scale-up data need to be obtained.
					The composition of the gas condensate for the commercial operation has been determined from the Room 6 data and computer modeling of the absorber/cooler.	The transferability of the information needs to be verified.
Oil/Water Separator (3.3-8)	Oils and Greases	G,H,I	17,18	2	The operating experience with gas condensates is not documented.	The feasibility and efficiency of the technology for removal of oils and greases from the gas condensates need to be evaluated.
					The technology is used commercially in other industries.	The technology transferability needs to be verified.
					Oil emulsions may not be controlled by the separator. Addition of chemicals or heating the water may be necessary to break the emulsion.	The oil emulsion problem with the oil shale gas condensates needs to be evaluated.

(Continued)

TABLE 7.1-1 (cont.)

Streams and Control Technologies (Figure No.)	Pollutant Controlled	Information Status[a]	Information Sources[b]	Reliability[c]	Remarks	Research Needs
Multimedia Gravity Filtration	Suspended Matter	G,H,I	8,17,18	2	See remarks under MIS Retort Water.	See research needs under MIS Retort Water.
Phosam-W Ammonia Recovery (3.3-10)	NH_3	I	1	2	The technology is mentioned in the PSD application as the method to recover ammonia from the process waters.	
		G,H	12,17	2	The operating experience with the oil shale process waters is not documented.	The feasibility and efficiency of the technology for the MIS gas condensate need to be evaluated.
					The technology is used commercially in other industries.	The technology transferability needs to be evaluated.
					Dissolved organics in the gas condensate may have a detrimental impact on the efficiency of ammonia recovery and the quality of the product.	Dissolved organics in the gas condensate and their impact on the efficiency of the technology need to be estimated.
Kettle Evaporator (3.3-11)	Dissolved Organics and Inorganics	C,I	1,6	3	The operating experience with the gas condensates is not documented, but the technology has been tested on the retort water.	The feasibility and efficiency of the technology for the gas condensates need to be evaluated.
		G,H	17,18	2	See remarks under MIS Retort Water.	See research needs under MIS Retort Water.
Lurgi Gas Liquor (3.3-5)	--	C	7	3	The composition of the gas liquor has been determined from the pilot experiment with the Tract C-b shale.	Scale-up data need to be obtained.
Oil/Water Separator (3.3-5)	Oils and Greases	G,H,I	17,18	2	See remarks under MIS Gas Condensate.	See research needs under MIS Gas Condensate.
Multimedia Gravity Filtration	Suspended Matter	G,H,I	8,17,18	2	See remarks under MIS Retort Water.	See research needs under MIS Retort Water.
Phosam-W Ammonia Recovery (3.3-10)	NH_3	G,H,I	1,12,17	2	See remarks under MIS Gas Condensate.	See research needs under MIS Gas Condensate.

(Continued)

TABLE 7.1-1 (cont.)

Streams and Control Technologies (Figure No.)	Pollutant Controlled	Information Status[a]	Information Sources[b]	Reliability[c]	Remarks	Research Needs
Kettle Evaporator (3.3-11)	Dissolved Organics and Inorganics	C,I	1,6	3	See remarks under MIS Gas Condensate.	See research needs under MIS Gas Condensate.
		G,H	17,18	2	See remarks under MIS Retort Water.	See research needs under MIS Retort Water.
Retort Water Stripper Overhead (3.3-7)	--	C	9	3	The quantities of strippable NH_3, H_2S, organics, etc., in the retort water from the Room 6 burn have been determined.	Scale-up data need to be obtained and the technology transferability needs to be verified.
Phosam-W Ammonia Recovery (3.3-10)	NH_3	G,H,I	1,12,17	2	See remarks under MIS Gas Condensate.	See research needs under MIS Gas Condensate.
Solid Wastes (3.3-15)	--	C	13,17	3	The MIS processed shale composition for Tract C-b has been derived from the Room 6 burn data at Logan Wash and material and elemental balances.	Scale-up data need to be obtained and the transferability of the information needs to be verified.
		C	13,17	3	The Lurgi processed shale composition has been derived from the pilot plant information on the Tract C-b shale and the material and elemental balances.	Scale-up data need to be obtained.
		C	14	3	Some physical properties of the Lurgi processed shale from Tract C-b have been measured.	Scale-up data need to be obtained.
		B	15,16	3	The quality of the leachate from the Room 6 processed shale has been determined in laboratory experiments.	Scale-up data need to be obtained and the transferability of the information needs to be verified.
		B	14	3	The quality of the leachate from the Lurgi processed shale has been determined in a laboratory experiment.	Scale-up data need to be obtained and the transferability of the information needs to be verified.
		I	17	4	The quality and quantity of the kettle evaporator sludge have been estimated based on calculated compositions of the process water feeds and an assumed efficiency for the evaporators.	The actual composition of the kettle evaporator sludge needs to be determined.

(Continued)

TABLE 7.1-1 (cont.)

Streams and Control Technologies (Figure No.)	Pollutant Controlled	Information Status[a]	Information Sources[b]	Reliability[c]	Remarks	Research Needs
		I	17	4	The quality and quantity of the FGD sludge have been estimated based on an assumed efficiency for the FGD process.	The actual composition of the FGD sludge needs to be determined.
		I	17	4	Cooling tower blowdown, boiler blowdown, boiler feedwater treatment regeneration waste, source water clarifier sludge, storm runoff, service and fire water, etc., are combined to form the processed shale moisturizing water.	The extent to which the process waste waters need to be treated before mixing with the processed shale needs to be determined. The changes in the physical and chemical properties of the processed shale due to mixing various plant wastes need to be determined.
Venturi Wet Scrubber (3.3-4)	Particulates	I	1	3	The technology is proposed in the PSD application as the method to control the particulates generated during the processed shale quenching/moisturizing.	
					The operating experience with the Lurgi processed shale is not documented.	The feasibility and efficiency of the technology for controlling the particulates from the processed shale quencher/moisturizer need to be evaluated.
		G,H	17,18	2	The technology is used commercially in other industries. The claimed efficiency of 98% appears to be achievable.	The technology transferability needs to be verified.
Surface Landfill (3.3-15)	Solid Wastes	I	1,17	2	A surface landfill for the disposal of the solid wastes is proposed in the PSD application.	
					The operating experience with field plots for the leaching and revegetation studies is not documented.	Actual leaching and revegetation data need to be obtained from large-scale processed shale field plots.
					The operating experience with the processed shale landfill stability is not documented.	The landfill stability needs to be evaluated from controlled, large-scale landfills.

(Continued)

TABLE 7.1-1 (cont.)

Streams and Control Technologies (Figure No.)	Pollutant Controlled	Information Status[a]	Information Sources[b]	Reliability[c]	Remarks	Research Needs
					Groundwater or surface water interactions with the landfill are site-specific.	The potential for contamination of the natural waters needs to be studied on a site-specific basis.
Runon Catchment Dam	Leachable Compounds	I	1,17	2	A runon catchment dam is proposed in the PSD application as the method to contain the precipitation falling in the watershed above the landfill.	
					The operating experience with the processed shale landfills is not documented, but the technology is used commercially in other industries.	
					According to the PSD application, the precipitation is allowed to percolate in the ground.	The movement of the percolated water and its interaction with the landfill will need to be monitored.
Runoff Collection System (5.3-3, 5.3-4)	Leachable Compounds	I	1,17	2	A French drain containing pervious material is provided in the PSD application as the method to collect the precipitation falling on the landfill.	
					The operating experience with the processed shale landfills is not documented, but the technology is used commercially in other industries.	The technology transferability needs to be verified.
Runoff Catchment Pond and Dam	Leached Compounds	I	1,17	2	A catchment pond at the base of the landfill to collect the runoff is mentioned in the PSD application.	The need for a pond lining should be evaluated based on the composition of waters in the catchment pond and on the subsurface hydrology of the area surrounding the landfill.
					The operating experience with the processed shale landfills is not documented, but the technology is used commercially in other industries.	

(Continued)

TABLE 7.1-1 (cont.)

Streams and Control Technologies (Figure No.)	Pollutant Controlled	Information Status[a]	Information Sources[b]	Reliability[c]	Remarks	Research Needs
Surface Stabilization	Particulates, etc.	I	1,17	2	The application of asphaltic emulsion and controlled traffic to reduce the fugitive dusts, stripping and grubbing, and revegetation are proposed in the PSD application as the means to stabilize the landfill surface. These technologies are used commercially in other industries.	The technology transferability needs to be verified.
Spent MIS Retorts (3.3-7)	Leachable Compounds	--	--	--	Except for mine dewatering during the project life, no provisions have been mentioned for the proper abandonment of the MIS spent retorts. The spent retorts are likely to remain hot for a long period of time. Any air leakage can cause the residual organic matter in the retorts to oxidize. Infiltration of groundwater may result in the leaching of the processed shale and eventually in contamination of the natural waters.	The potential problems associated with worker safety, groundwater contamination, land subsidence, etc., need to be evaluated. Also, the potential of preventing groundwater contamination by intentionally leaching the spent MIS retorts needs to be evaluated.

[a] Information Status:

A Conceptual analysis.
B Laboratory, bench-scale studies--oil shale or similar industry.
C Pilot plant studies--oil shale or similar industry.
D Semi-works studies--oil shale or similar industry.
E Commercial-scale studies--oil shale or similar industry.
F Pilot-scale studies--related industries.
G Commercial-scale studies--related industries.
H Vendor provided information.
I Engineering calculations.

[b] Information Sources (detailed source information can be found in Section 8, References):

1 Occidental Oil Shale, Inc. and Tenneco Shale Oil Co., April 1981.
2 Ashland Oil, Inc. and Shell Oil Co., February 1976.
3 Ashland Oil, Inc. and Occidental Oil Shale, Inc., February 1977.
4 Ashland Oil, Inc. and Occidental Oil Shale, Inc., October 1977.
5 U.S. EPA, December 15, 1977.
6 Loucks, November 1979.
7 Rio Blanco Oil Shale Co., February 1981.
8 Water Purification Associates, December 1975.
9 Hicks and Liang, January 1981.

(Continued)

TABLE 7.1-1 (cont.)

10 Cheremisinoff and Ellerbusch, 1978.
11 Wilhelmi and Knopp, August 1979.
12 U.S.S. Engineers and Consultants, Inc., April 1978.
13 Private Communication.
14 Woodward-Clyde Consultants, October 13, 1980.
15 Stollenwerk, 1980.
16 U.S. DOE, May 1980.
17 Engineering Calculations (DRI, SWEC, WPA).
18 Vendor estimates.

[c] Reliability:

1 Information is judged to be applicable, no problems envisioned.
2 Information applicable, but some design or scale-up problems may be encountered.
3 Information applicable, but significant design or scale-up problems may be encountered.
4 Information may be applicable, but both design as well as scale-up problems may be encountered.
5 Information may not be applicable without major design and scale-up modifications.

Source: DRI based on the references listed in footnote b.

SECTION 8

REFERENCES

Adams, C.E. and W.W. Eckenfelder, eds. 1974. Process Design Techniques for Industrial Waste Treatment. Associated Water and Air Resources Engineers, Environmental Press, Nashville, Tennessee.

American Petroleum Institute. 1969. Manual on Disposal of Refinery Wastes, Volume on Liquid Wastes. API, New York.

American Petroleum Institute. March 1978. A New Correlation of NH_3, CO_2 and H_2S Volatility Data From Aqueous Sour Water Systems. Publication No. 955. API, New York.

Ashland Oil, Inc. and Occidental Oil Shale, Inc. February 1977. Oil Shale Tract C-b: Modifications to Detailed Development Plan.

Ashland Oil, Inc. and Occidental Oil Shale, Inc. October 1977. Prevention of Significant Deterioration; Application to U.S. Environmental Protection Agency, Region VIII.

Ashland Oil, Inc. and Shell Oil Company. February 1976. Oil Shale Tract C-b: Detailed Development Plan and Related Materials. 2 vols.

Barduhn, A.J. September 1967. The Freezing Processes for Desalting Saline Waters. Progress in Refrigeration Science and Technology, Proceedings of the International Congress of Refrigeration, 12th, Madrid. Vol. 1, 37-55.

Battelle, Columbus Laboratories. October 1978. Control of NOx Emission by Stack Gas Treatment. EPRI FP-925. Final report prepared for the Electric Power Research Institute, Palo Alto, California.

Beychok, M.R. 1967. Aqueous Wastes from Petroleum and Petrochemical Plants. John Wiley and Sons, Surrey, England.

Calmon, C. and H. Gold. 1979. Ion Exchange for Pollution Control. 2 vols. CRC Press, Boca Raton, Florida.

Cathedral Bluffs Shale Oil Company. November 14, 1980. Proposal for Financial Assistance in the Form of a Loan Guarantee, Volume V. Submitted to U.S. Department of Energy in response to Solicitation DE-PS60-81RA50480.

Cheremisinoff, P.N. and F. Ellerbusch. 1978. Carbon Adsorption Handbook. Ann Arbor Science, Ann Arbor, Michigan.

Colony Development Operation. 1977. Prevention of Significant Deterioration; Application to U.S. Environmental Protection Agency, Region VIII.

Colony Development Operation. March 1980. Application to Colorado Mined Land Reclamation Board for Solid Waste Disposal Permit.

Denver Research Institute/Water Purification Associates/Stone and Webster Engineering Corporation. July 1979. Predicted Costs of Environmental Controls for a Commercial Oil Shale Industry. U.S. Department of Energy Report No. COO-5107-2.

Dravo Corporation. February 1976. Handbook of Gasifiers and Gas Treatment Systems. FE-1772-11. Final Report, Task Assignment No. 4, Engineering Support Services. Submitted to the U.S. Energy Research and Development Administration.

Electric Power Research Institute. April 1980. Economic and Design Factors for Flue Gas Desulfurization Technology. EPRI CS-1428.

Fox, J.P., D.E. Jackson and R.H. Sakaji. 1980. Potential Uses of Spent Shale in the Treatment of Oil Shale Retort Waters. 13th Oil Shale Symposium Proceedings, Colorado School of Mines, Golden, Colorado.

Fox, J.P., K.K. Mason and J.J. Duvall. 1979. Partitioning of Major, Minor and Trace Elements During Simulated In Situ Oil Shale Retorting. 12th Oil Shale Symposium Proceedings, Colorado School of Mines, Golden, Colorado.

Girvin, D.C., T. Hadeishi and J.P. Fox. June 1980. Use of Zeeman Atomic Absorption Spectroscopy for the Measurement of Mercury in Oil Shale Gases. Oil Shale Symposium: Sampling, Analysis and Quality Assurance, March 26-28, 1979, Denver, Colorado. EPA-600/9-80-022. U.S. Environmental Protection Agency.

Gulf Oil Corporation and Standard Oil Company (Indiana). March 1976. Rio Blanco Oil Shale Project: Detailed Development Plan, Tract C-a. 4 vols. Submitted to U.S. Department of the Interior, Geological Survey, Area Oil Shale Supervisor.

Hart, J.A. June 11, 1973. Waste Water Recycled for Use in Refinery Cooling Towers. Oil and Gas Journal. 71(24):92-96.

Hicks, R.E., et al. June 1979. Wastewater Treatment in Coal Conversion. EPA-600/7-79-133. U.S. Environmental Protection Agency.

Hicks, R.E. and L. Liang. January 1981. A Study of Reverse Osmosis for Treating Oil Shale In Situ Wastewaters, Final Report. DOE/LC/10089-5. U.S. Department of Energy.

Hicks, R.E. and I.E. Wei. December 1980. A Study of Aerobic Oxidation and Allied Treatments for Upgrading In Situ Retort Waters, Final Report. DOE/LC 10097-1. U.S. Department of Energy.

Humenick, M.J. 1977. Water and Wastewater Treatment: Calculations for Chemical and Physical Processes. Marcel Dekker, New York.

Jones, B.M., R.H. Sakaji and C.G. Daughton. August 1982. Physicochemical Treatment Methods for Oil Shale Wastewater: Evaluation as Aids to Biooxidation. 15th Oil Shale Symposium Proceedings, Colorado School of Mines, Golden, Colorado.

Kohl, A.L. and F.C. Riesenfeld. 1979. Gas Purification. 3rd ed. Gulf Publishing Company, Houston, Texas.

Krisher, A.S. August 28, 1978. Raw Water Treatment in the CPI. Chemical Engineering. 85(19):78-98.

Loucks, R.A. November 1979. Occidental Vertical Modified In Situ Process for the Recovery of Oil from Oil Shale: Phase I, Final Report, Parts 1 and 2 for U.S. Department of Energy.

Mallon, R.G. January 1980. Preparation and Injection of Grout from Spent Shale for Stabilization of Abandoned In Situ Oil Shale Retorts. Third Annual Oil Shale Conversion Symposium, Denver, Colorado.

Marnell, P. September 1976. Lurgi/Ruhrgas Shale Oil Process, Hydrocarbon Processing. 55(9):269-271.

McWhorter, D.B. 1980. Reconnaissance Study of Leachate Quality from Raw Mined Oil Shale--Laboratory Columns. EPA-600/7-80-181. U.S. Environmental Protection Agency.

Mercer, B.W., A.C. Campbell and W. Wakayima. May 1979. Evaluation of Land Disposal and Underground Injection of Shale Oil Wastewaters. U.S. Department of Energy Report No. PNL-2596.

Merrow, E.W. September 1978. Constraints on the Commercialization of Oil Shale. R-2293-DOE. U.S. Department of Energy.

Merrow, E.W., S.W. Chapel and C. Worthing. July 1979. A Review of Cost Estimation in New Technologies: Implications for Energy Process Plants. R-2481-DOE. U.S. Department of Energy.

Nutter, J. and C. Waitman. 1978. Oil Shale Economics Update. Tosco Corporation, Los Angeles, California.

Occidental Oil Shale, Inc. and Tenneco Shale Oil Company. April 1981. Prevention of Significant Deterioration; Application to U.S. Environmental Protection Agency, Region VIII.

Peabody Process Systems, Inc. February 1981. Paid study on suitability of the Holmes-Stretford Process for Oil Shale Projects. Prepared for Denver Research Institute, Denver, Colorado.

Peat, Marwick, Mitchell & Co. September 1980. Final Report: Oil Shale Tax Study. Prepared for the Committee on Oil Shale, Rocky Mountain Oil and Gas Association. Washington, D.C.

Persoff, P. and J.P. Fox. April 1979. Control Strategies for Abandoned In Situ Oil Shale Retorts. 12th Oil Shale Symposium Proceedings, Colorado School of Mines, Golden, Colorado.

Persoff, P. and P.K. Mehta. January 1980. Cement Preparation from Lurgi Spent Shale. Third Annual Oil Shale Conversion Symposium, Denver, Colorado.

Peters, M.S. and K.D. Timmerhaus. 1980. Plant Design and Economics for Chemical Engineers. 3rd ed. McGraw-Hill.

Pforzheimer, H. and S.K. Kunchal. March 24, 1977. Commercial Evaluation of an Oil Shale Industry Based on the Paraho Process. Paper presented to the American Chemical Society National Meeting, New Orleans, Louisiana.

Ralph M. Parsons Co. March 1979. Modified In Situ Oil Shale Process. Occidental Oil Shale Inc., 50,000 BPD Commercial Plant: Summary Operating Cost Estimate and Capital Cost Estimate. For U.S. Department of Energy, Cooperative Agreement No. ET-77-A-03-1848, Subcontract No. 5788.

Rangnow, D.G. and P.A. Fasullo. September 28, 1981. Rapid Growth is Outlook for Recovered Sulfur. Oil and Gas Journal. 79(39):242-246.

Research and Education Association. 1980. Modern Pollution Control Technology. Vol. I: Air Pollution Control. New York.

Ricketts, T.E. 1980. Occidental's Retort 6 Rubbilizing and Rock Fragmentation Program. 13th Oil Shale Symposium Proceedings, Colorado School of Mines, Golden, Colorado.

Rio Blanco Oil Shale Company. February 1981. Modification to the Detailed Development Plan, Tract C-a: Lurgi Demonstration Project. Submitted to U.S. Department of the Interior, Geological Survey, Deputy Conservation Manager - Oil Shale.

Schmalfeld, I.P. July 1975. The Use of the Lurgi-Ruhrgas Process for the Distillation of Oil Shale. Quarterly of the Colorado School of Mines. 70-3:129-145.

Sklarew, D.S., et al. Feburary 1981. Preliminary Report, Measurements of Sulfur Species in Offgas from Rio Blanco's Retort 0 Tract C-a Colorado. U.S. Department of Energy.

Stanfield, K.E., et al. 1951. Properties of Colorado Oil Shale. U.S. Department of the Interior, Bureau of Mines Report No. 4825.

Stollenwerk, K.G. 1980. Geochemistry of Leachate from Retorted and Unretorted Colorado Oil Shale. Ph.D. Thesis, University of Colorado.

Stone and Webster Engineering Corporation. January 30, 1979. Reference Fossil Power Plant, Book 2B-1.

TRW and DRI. 1975-1978. An Engineering Report on the Lurgi Retorting Process for Oil Shale. U.S. Environmental Protection Agency Contract No. EPA-68-02-1881.

Uhl, V.W. June 1979. A Standard Procedure for Cost Analysis of Pollution Control Operations: Vol. II, Appendices. EPA-600/8-79-018b. U.S. Environmental Protection Agency.

U.S. Department of Energy, Office of Health and Environmental Research, Division of Environmental Control Technology. May 1980. Environmental Research on a Modified In Situ Oil Shale Process: A Progress Report from the Oil Shale Task Force. DOE/EV-0078.

U.S. Department of the Interior, Bureau of Mines. August 1981. Minerals and Materials: A Monthly Survey. Washington, D.C.

U.S. Environmental Protection Agency. December 15, 1977. Prevention of Significant Deterioration of Air Quality Conditional Permit granted for Tract C-b Shale Oil Venture Project.

U.S. Environmental Protection Agency. September 1980. Lining of Waste Impoundment and Disposal Facilities. Report No. SW-870.

U.S. Environmental Protection Agency. 1980. Environmental Perspective on the Emerging Oil Shale Industry. EPA-600/2-80-205a.

U.S.S. Engineers and Consultants, Inc. April 1978. Communication with Water Purification Associates, Cambridge, Massachusetts, regarding information on the Phosam-W process.

Water Purification Associates. December 1975. Innovative Technologies for Water Pollution Abatement. NCWQ 75/13. National Committee on Water Quality, Washington, D.C.

Wilhelmi, A.R. and P.V. Knopp. August 1979. Wet Air Oxidation: An Alternative to Incineration. Chemical Engineering Progress. 75(8):46-52.

Woodward-Clyde Consultants. October 13, 1980. Preliminary Laboratory Testing, Lurgi-Ruhrgas Retorted Shale. For Occidental Oil Shale, Inc., Grand Junction, Colorado.

York, E.D. June 13, 1980. Rio Blanco Oil Shale Company. Correspondence with Denver Research Institute, Denver, Colorado, regarding information on the Lurgi retorting process.