United States
Environmental Protection
Agency

Handbook on Advanced Nonphotochemical Oxidation Processes

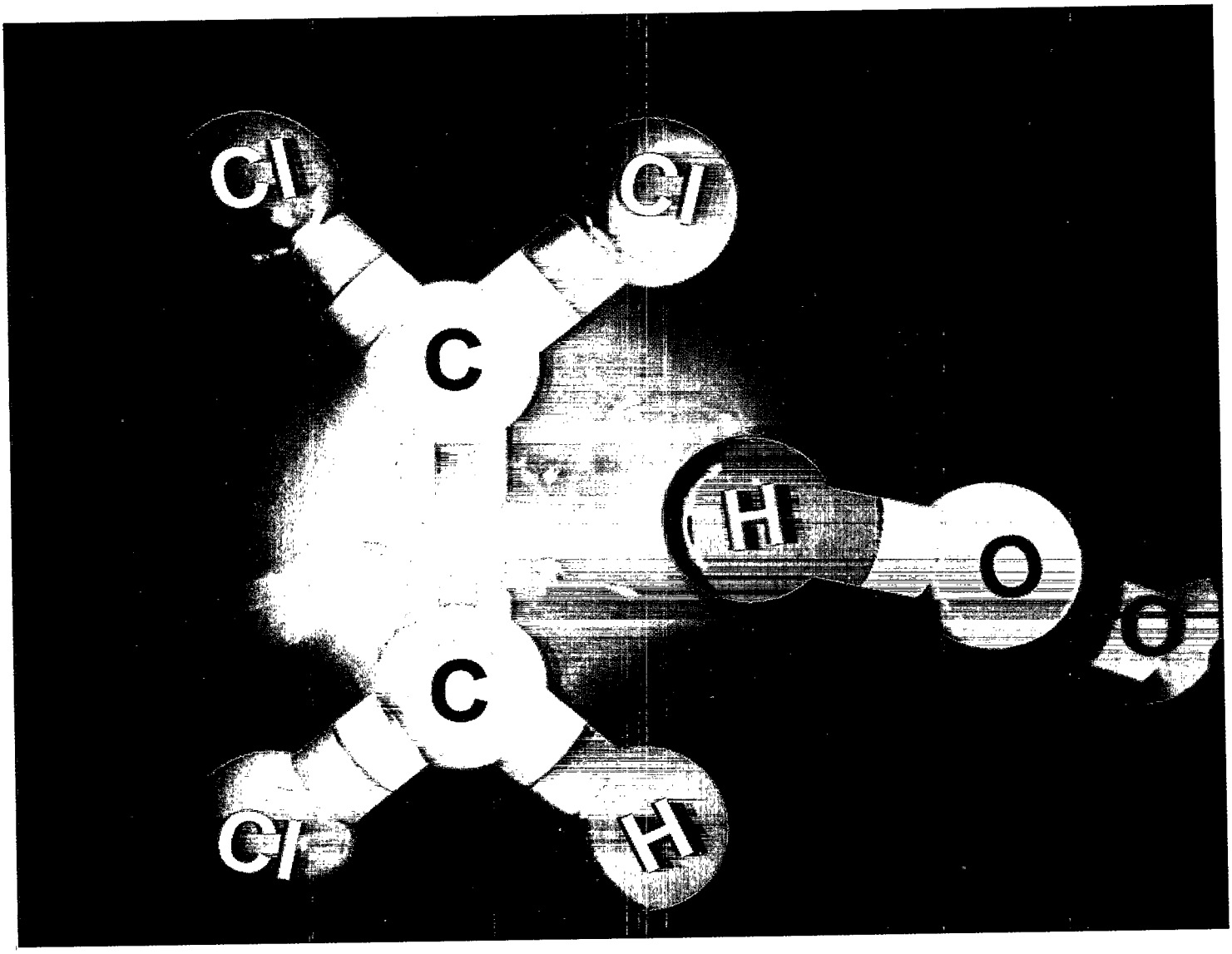

EPA/625/R-01/004
July 2001

HANDBOOK ON ADVANCED NONPHOTOCHEMICAL OXIDATION PROCESSES

Center for Environmental Research Information
National Risk Management Research Laboratory
Office of Research and Development
U.S. Environmental Protection Agency
Cincinnati, Ohio 45268

Recycled/Recyclable
Printed with vegetable-based ink on paper that contains a minimum of 50% post-consumer fiber content processed chlorine free.

Notice

This document preparation has been funded by the U.S. Environmental Protection Agency under Contract No. 686-C7-0011, Work Assignment No. 3-86 and its predecessors. Mention of trade names or commercial products does not constitute endorsement or recommendation for use.

Foreword

The U.S. Environmental Protection Agency is charged by Congress with protecting the Nation's land, air, and water resources. Under a mandate of national environmental laws, the Agency strives to formulate and implement actions leading to a compatible balance between human activities and the ability of natural systems to support and nurture life. To meet this mandate, EPA's research program is providing data and technical support for solving environmental problems today and building a science knowledge base necessary to manage our ecological resources wisely, understand how pollutants affect our health, and prevent or reduce environmental risks in the future.

The National Risk Management Research Laboratory is the Agency's center for investigation of technological and management approaches for preventing and reducing risks from pollution that threaten human health and the environment. The focus of the Laboratory's research program is on methods and their cost-effectiveness for prevention and control of pollution to air, land, water, and subsurface resources; protection of water quality in public water systems; remediation of contaminated sites, sediments and groundwater; prevention and control of indoor air pollution; and restoration of ecosystems. NRMRL collaborates with both public and private sector partners to foster technologies that reduce the cost of compliance and to anticipate emerging problems. NRMRL's research provides solutions to environmental problems by: developing and promoting technologies that protect and improve the environment; advancing scientific and engineering information to support regulatory and policy decisions; and providing the technical support and information transfer to ensure implementation of environmental regulations and strategies at the national, state, and community levels.

This publication has been produced as part of the Laboratory's strategic long-term research plan. It is published and made available by EPA's Office of Research and Development to assist the user community and to link researchers with their clients.

E. Timothy Oppelt, Director
National Risk Management Research Laboratory

Abstract

The primary purpose of this handbook is to summarize commercial-scale system performance and cost data for advanced nonphotochemical oxidation (ANPO) treatment of contaminated water, air, and soil. Similar information from pilot- and bench-scale evaluations of ANPO processes is also included to supplement the commercial-scale data. Performance and cost data is summarized for the following ANPO processes: (1) Fenton, (2) ozone/hydrogen peroxide, (3) electrochemical oxidation, (4) supercritical water oxidation, (5) cavitation (acoustic, electrohydraulic, and hydrodynamic), (6) electrical discharge-based nonthermal plasma, (7) gamma-ray, (8) x-ray, and (9) electron-beam. This handbook is intended to assist environmental practitioners in evaluating the applicability of ANPO processes and in selecting one or more such processes for site-specific evaluation.

ANPO processes have been demonstrated to be effective in treating contaminated water, air, and soil to varying degrees. Regarding contaminated water treatment, a number of ANPO processes have been evaluated in terms of their effectiveness in treating various contaminants in groundwater, industrial wastewater, municipal wastewater, drinking water, landfill leachate, and surface water. Of these processes, the Fenton process has been evaluated for the most contaminant groups, and the electrohydraulic cavitation and x-ray processes appear to have been evaluated for the fewest. Regarding contaminated air treatment, only three ANPO processes have been evaluated in terms of their effectiveness in treating various contaminants air stripper off-gas, industrial emissions, and automobile emissions. Of these processes, the electrical discharge-based nonthermal plasma and electron-beam processes have been evaluated for the most contaminant groups, and the gamma-ray process has been evaluated for the fewest. Regarding contaminated soil treatment, only two ANPO processes have been evaluated in terms of their effectiveness in treating various soil contaminants. Of these processes, the Fenton process has been evaluated for more contaminant groups than the gamma-ray process.

Contents

Section — Page

Notice ii

Foreword iii

Abstract iv

Tables viii

Figures ix

Acronyms, Abbreviations, and Symbols x

Glossary xiii

Acknowledgments xvi

Executive Summary ES-1

1 Introduction 1-1

1.1 Purpose and Scope 1-1
1.2 Organization 1-2
1.3 References 1-4

2 Background 2-1

2.1 ANPO Processes 2-1

2.1.1 Fenton Process 2-1
2.1.2 O_3/H_2O_2 Process 2-3
2.1.3 Electrochemical Oxidation Process 2-4
2.1.4 SCWO Process 2-4
2.1.5 Cavitation Processes 2-5

2.1.5.1 Acoustic Cavitation 2-5
2.1.5.2 Electrohydraulic Cavitation 2-7
2.1.5.3 Hydrodynamic Cavitation 2-7

2.1.6 Electrical Discharge-Based Nonthermal Plasma Processes 2-7
2.1.7 Gamma-Ray Process 2-9
2.1.8 X-Ray Process 2-10
2.1.9 E-Beam Process 2-10

2.2 Commercial-Scale ANPO Systems 2-11

2.2.1 Geo-Cleanse® Fenton System 2-11

2.2.1.1 In Situ System 2-11
2.2.1.2 Ex Situ System 2-12

2.2.2 ISOTEC™ Fenton System 2-13
2.2.3 H&H SSCO™ Fenton System 2-13

Contents (Continued)

Section | Page

2.2.4 Chematur Aqua Critox® SCWO System 2-15
2.2.5 General Atomics SCWO System 2-15
2.2.6 OSI HYDROX Hydraulic Cavitation System 2-16
2.2.7 HVEA E-Beam Treatment System 2-17

2.3 ANPO System Design Considerations 2-18
2.4 References 2-19

3 Contaminated Water Treatment 3-1

3.1 Contaminated Groundwater Treatment 3-1

3.1.1 VOC-Contaminated Groundwater 3-1
3.1.2 SVOC-Contaminated Groundwater 3-7
3.1.3 PCB-Contaminated Groundwater 3-14
3.1.4 Pesticide- and Herbicide-Contaminated Groundwater 3-14
3.1.5 Dioxin- and Furan-Contaminated Groundwater 3-15
3.1.6 Explosive- and Degradation Product-Contaminated Groundwater 3-16
3.1.7 Humic Substance-Contaminated Groundwater 3-17
3.1.8 Inorganic-Contaminated Groundwater 3-18

3.2 Industrial Wastewater Treatment 3-26

3.2.1 SVOC-Contaminated Industrial Wastewater 3-26
3.2.2 Dye-Contaminated Industrial Wastewater 3-27
3.2.3 Inorganic-Contaminated Industrial Wastewater 3-30
3.2.4 High-COD Industrial Wastewater 3-32

3.3 Municipal Wastewater Treatment 3-35

3.3.1 VOC-Contaminated Municipal Wastewater 3-35
3.3.2 Microbe-Contaminated Municipal Wastewater 3-35

3.4 Contaminated Drinking Water Treatment 3-37

3.4.1 VOC-Contaminated Drinking Water 3-37
3.4.2 SVOC-Contaminated Drinking Water 3-37
3.4.3 Humic Substance-Contaminated Drinking Water 3-37
3.4.4 Microbe-Contaminated Drinking Water 3-38

3.5 Landfill Leachate Treatment 3-40
3.6 Contaminated Surface Water Treatment 3-40
3.7 References 3-40

4 Contaminated Air Treatment 4-1

4.1 Air Stripper Off-Gas Treatment 4-1

4.1.1 VOC-Containing Air Stripper Off-Gas 4-1
4.1.2 SVOC-Containing Air Stripper Off-Gas 4-4

Contents (Continued)

Section | Page

4.2 Industrial Emission Treatment 4-6

4.2.1 NO_x- and SO_x-Containing Industrial Emissions 4-6
4.2.2 Metal-Containing Industrial Emissions 4-7

4.3 Automobile Emission Treatment 4-9
4.4 References 4-9

5 Contaminated Soil Treatment 5-1

5.1 VOC-Contaminated Soil 5-1
5.2 SVOC-Contaminated Soil 5-3
5.3 PCB-Contaminated Soil 5-7
5.4 Pesticide- and Herbicide-Contaminated Soil 5-7
5.5 Dioxin-Contaminated Soil 5-8
5.6 Explosive- and Degradation Product-Contaminated Soil 5-8
5.7 References 5-15

Appendix

Technology Vendor Contact Information A-1

Tables

Table		Page
ES-1.	Summary of Commercial-Scale ANPO Processes for Contaminated Water Treatment	ES-7
ES-2.	Summary of Commercial-Scale ANPO Processes for Contaminated Soil Treatment	ES-9
1-1.	Oxidation Potential of Several Oxidants in Water	1-1
1-2.	Overall Rate Constants for O_3 and •OH Reactions with Organic Compounds in Water	1-2
3-1.	Summary of Contaminated Groundwater Treatment	3-19
3-2.	Summary of Industrial Wastewater Treatment	3-33
3-3.	Summary of Municipal Wastewater Treatment	3-36
3-4.	Summary of Contaminated Drinking Water Treatment	3-39
4-1.	Summary of Air Stripper Off-Gas Treatment	4-5
4-2.	Summary of Industrial Emission Treatment	4-8
5-1.	Summary of Contaminated Soil Treatment	5-10

Figures

Figure		Page
1-1.	Performance and cost data organization	1-3
2-1.	Flow configuration in an in situ Geo-Cleanse® Fenton system	2-12
2-2.	Flow configuration in an ex situ Geo-Cleanse® Fenton system	2-13
2-3.	Flow configuration in an ISOTEC™ Fenton system	2-14
2-4.	Flow configuration in a Chematur Aqua Critox® system	2-15
2-5.	Flow configuration in a General Atomics SCWO system	2-16
2-6.	Flow configuration in an OSI HYDROX hydraulic cavitation system	2-17
2-7.	Flow configuration in an HVEA E-Beam system	2-18

Acronyms, Abbreviations, and Symbols

>	Greater than
<	Less than
±	Plus or minus
µg/kg	Microgram per kilogram
µg/L	Microgram per liter
ADMI	American Dye Manufacturers Institute
ANPO	Advanced nonphotochemical oxidation
bgs	Below ground surface
BOD	Biochemical oxygen demand
BTEX	Benzene, toluene, ethylbenzene, and xylene
c.u.	Color unit
$CaCO_3$	Calcium carbonate
cfu/mL	Colony forming unit per milliliter
Chematur	Chematur Engineering AB
cm	Centimeter
cm^2	Square centimeter
CMHPOS	Complexed metal hydrogen peroxide oxidation system
^{60}Co	Cobalt 60
CO	Carbon monoxide
CO_2	Carbon dioxide
COD	Chemical oxygen demand
CP	Chlorophenol
DCA	Dichloroethane
DCE	Dichloroethene
DCP	Dichlorophenol
DMMP	Dimethyl methane phosphoric acid ester
DNP	Dinitrophenol
DOC	Dissolved organic carbon
DRO	Diesel range organics
DSD	1-Amino-8-naphthol-3,6-disulfonic acid
e^-_{aq}	Aqueous electron
E-beam	Electron beam
EDTA	Ethylenediaminetetraacetic acid
Fe(0)	Metallic iron
Fe(II)	Ferrous iron
Fe(III)	Ferric iron
$FeCl_2$	Ferrous chloride
$FeSO_4$	Ferrous sulfate
FSR	Fenton sludge recycling
Geo-Cleanse	Geo-Cleanse International, Inc.
GRO	Gasoline range organics
H•	Hydrogen radical
H&H	H&H Eco Systems, Incorporated
H_2O	Water molecule

Acronyms, Abbreviations, and Symbols (Continued)

H_2O_2	Hydrogen peroxide
H_2SO_4	Sulfuric acid
H_3PO_4	Phosphoric acid
HCl	Hydrochloric acid
HMX	Octahydro-1,3,5,7-tetranitro-1,3,5,7-tetrazocine
HO_2^-	Hydroperoxide ion
HVEA	High Voltage Environmental Applications, Inc.
ISOTEC	In-Situ Oxidative Technologies, Inc.
keV	Kiloelectron volt
kg	Kilogram
kHz	Kilohertz
kPa	kiloPascal
krad	kilorad
kW	Kilowatt
kWhr/L	Kilowatt-hour per liter
L	Liter
L/hr	Liter per hour
L/min	Liter per minute
L/s	Liter per second
M	Mole per liter
m	Meter
m^3	Cubic meter
m^3/hr	Cubic meter per hour
m^3/min	Cubic meter per minute
mA	Milliampere
mA/cm^2	Milliampere per square centimeter
MeV	Million electron volt
mg/kg	Milligram per kilogram
mg/L	Milligram per liter
mL	Milliliter
mM	Millimole per liter
MPa	MegaPascal
Mrad	Megarad
Mrad/min	Megarad per minute
MTBE	Methyl-tert-butyl ether
NORAM	NORAM Engineering and Constructors Limited
NO_x	Nitrogen oxides
NP	Nitrophenol
O&M	Operation and maintenance
$O(^1D)$	Singlet oxygen atom
O_2	Oxygen
O_3	Ozone
OCDD	Octachlorodibenzo-p-dioxin
•OH	Hydroxyl radical

Acronyms, Abbreviations, and Symbols (Continued)

OH^-	Hydroxide ion
OSI	Oxidation Systems, Inc.
PAH	Polynuclear aromatic hydrocarbon
PCB	Polychlorinated biphenyl
PCE	Tetrachloroethene
PCP	Pentachlorophenol
PDU	Process Development Unit
ppmv	Part per million by volume
Pt/Co	Platinum/cobalt
RDX	Hexahydro-1,3,5-trinitro-1,3,5-triazine
RTD	Resistance temperature device
scmm	Standard cubic meter per minute
SCWO	Supercritical water oxidation
SO_2	Sulfur dioxide
SO_x	Sulfur oxides
SSCO™	Solid State Chemical Oxidation™
SVOC	Semivolatile organic compound
SW-846	"Test Methods for Evaluating Solid Waste"
TCA	Trichloroethane
TCDD	2,3,7,8-Tetrachlorodibenzo-p-dioxin
TCE	Trichloroethene
TCP	Trichlorophenol
TIC	Tentatively identified compound
TiO_2	Titanium dioxide
TKN	Total Kjeldahl nitrogen
TNT	2,4,6-Trinitrotoluene
TOC	Total organic carbon
U.S. EPA	U.S. Environmental Protection Agency
UV	Ultraviolet
VC	Vinyl chloride
VOC	Volatile organic compound
W	Watt
W/cm^2	Watt per square centimeter
WPO®	Wet Peroxide Oxidation®

Glossary

Acoustic impedance. The ratio of the sound pressure on a given surface to the sound flux through that surface. Acoustic impedance is expressed in acoustic ohms.

Batch reactor. A container in which a reaction is performed without any inflow or outflow of material during the reaction

Bioassay test. A test for quantitatively determining the concentration of a substance that has a specific effect on a suitable animal, plant, or microorganism under controlled conditions

Biochemical oxygen demand (BOD). The amount of dissolved oxygen consumed by microorganisms during biochemical decomposition of oxidizable organic matter under aerobic conditions. The BOD test is widely used to measure the pollution associated with biodegradable organic matter present in wastewaters.

Bioluminescence. The emission of visible light by living organisms

Capacitance. The ratio of the charge on one of the conductors of a capacitor to the potential difference (voltage) between the conductors

Capacitor. A device that essentially consists of two conductors (such as parallel, metal plates) insulated from each other by a dielectric and that introduces capacitance into a circuit, stores electrical energy, blocks the flow of direct current, and allows the flow of alternating current to a degree dependent on the capacitor's capacitance and the current frequency. A capacitor is also known as a condenser.

Catalyst. A substance that alters the rate of a chemical reaction and that may be recovered essentially unaltered in form and amount at the end of the reaction

Chelating compound. An organic compound in which atoms form more than one coordinate bond with metals in solution

Chemical oxygen demand (COD). A measure of the oxygen equivalent of organic matter that is susceptible to oxidation by a strong chemical oxidant under acidic conditions. The COD test is widely used to measure the pollution associated with both biodegradable and nonbiodegradable organic matter present in wastewaters.

Complex. A chemical compound formed by the union of a metal ion with a nonmetallic ion or molecule called a ligand or complexing agent

Congener. A chemical substance that is closely related to another substance, such as a derivative of a compound or an element belonging to the same family as another element in the periodic table. For example, the 209 polychlorinated biphenyls are congeners of one another.

Dielectric. A material that is an electric insulator or in which an electric field can be sustained with minimum dissipation of power. Commonly used dielectrics include air, rubber, plastics, and oil.

Dielectric constant. For an isotropic medium, the ratio of the capacitance of a capacitor filled with a given dielectric to that of the same capacitor having only vacuum as dielectric. Also known as relative permittivity

Dielectric strength. The maximum electrical potential gradient (voltage difference across a material per unit length) that a material can withstand without destruction of the material itself, which causes arcing. Dielectric strength is usually expressed in volts per millimeter of the thickness of the material and is also known as electric strength.

Diffusivity. The quantity of heat passing normally through a unit area per unit time divided by the product of the specific heat, density, and temperature gradient. Diffusivity is also known as thermometric conductivity.

Glossary (Continued)

Electrical conductivity. A measure of the ability of a solution to carry an electrical current. Electrical conductivity varies with both the number and type of ions present in a solution.

Electrical potential. The amount of work that must be done against electric forces to bring a unit charge from a reference point to the point in question. The reference point is located at an infinite distance, or for practical purposes, at the surface of the earth or some other large conductor.

Electrolytic cell. A cell consisting of electrodes immersed in an electrolyte solution. Such a cell is used to carry out electrolysis.

Electromagnetic radiation. A form of energy that appears to consist of both waves and particles called photons. It includes visible light, ultraviolet radiation, radio waves, x-rays, and other forms of radiation differentiated by their wavelengths and equivalent energies.

Electron volt. A unit of energy equal to the energy acquired by an electron when it passes through a potential difference of 1 volt in vacuum

Half-life. The time required for a given material to decrease to one-half of its initial amount during a chemical reaction

Hydraulic retention time. The time spent by a unit volume of water in a reactor expressed as the ratio of the reactor volume to the influent flow rate

Implicit price deflator. The ratio of the gross national product measured at current prices to the gross national product measured at prices in some base year

Isotropic medium. A medium whose properties do not depend on the direction along which they are measured

Nonphotochemical oxidation. A chemical reaction that is not influenced or initiated by light and that removes electrons from a compound or part of a compound

Oxidant. A chemical that decreases the electron content or increases the oxygen content of other chemicals

Oxidation potential. The difference in electrical potential between an atom or ion and the state in which an electron has been removed to an infinite distance from the atom or ion

Pyrolysis. The chemical decomposition or change brought about by the use of heat in the absence of oxygen

Radical. An uncharged species containing one or more unpaired electrons; also known as a free radical

Saturated organic compound. An organic compound in which all the available valence bonds along the carbon chain are attached to other atoms. Such compounds contain single bonds.

Scavenger. In advanced oxidation process chemistry, any compound or ion that is not a target contaminant and that consumes primary reactive species (hydroxyl radicals). Carbonate and bicarbonate ions are two examples of scavengers.

Singlet oxygen atom. Oxygen with no unpaired electrons. It is more reactive than triplet oxygen (oxygen with two unpaired electrons—the ground state).

Solvent polarity. The tendency of a solvent to promote ionization of a solute. Water has a higher polarity than oil.

Glossary (Continued)

Specific heat. The ratio of the amount of heat required to raise a mass of material 1 degree in temperature to the amount of heat required to raise an equal mass of a reference substance, usually water, 1 degree in temperature, usually at constant pressure or constant volume

Stoichiometry. The numerical relationship of elements and compounds as reactants and products in chemical reactions

Superfund. A program established in 1980 by the U.S. Environmental Protection Agency (U.S. EPA) to identify abandoned or inactive sites where hazardous substances have been or might be released to the environment in order to (1) ensure that the sites are cleaned up by responsible parties or the government, (2) evaluate damages to natural resources, and (3) create a claim procedure for parties that have cleaned up the sites or spent money to restore natural resources

Superfund Innovative Technology Evaluation Program. A program established by U.S. EPA to encourage development and implementation of innovative technologies for hazardous waste site remediation, monitoring, and measurement

Synergistic effect. A condition in which the total effect of two or more active components in a mixture is greater than the sum of their individual effects

Unsaturated organic compound. An organic compound that contains one or more double or triple bonds

Unsaturated zone. The zone between the land surface and the water table. The unsaturated zone is also called the vadose zone or zone of aeration.

Viscosity. The resistance that a gaseous or liquid system offers to flow when the system is subjected to shear stress. Viscosity is also known as flow resistance.

Acknowledgments

This handbook was prepared under the direction and coordination of Mr. Douglas Grosse and Ms. Norma Lewis of the U.S. Environmental Protection Agency (U.S. EPA) National Risk Management Research Laboratory (NRMRL) in Cincinnati, Ohio. Mr. Grosse served as the work assignment manager (WAM) and Ms. Lewis served as the technical coordinator for the project. Contributors to and reviewers of this handbook included Mr. Grosse and Ms. Lewis, Mr. Gary Peyton of the Illinois State Water Survey, Dr. John Roth of Vanderbilt University, Dr. Sardar Hassan of the U.S. Air Force, and Dr. E. Sahle-Demessie of U.S. EPA NRMRL. The handbook cover was designed by Mr. John McCready of U.S. EPA NRMRL. Dr. Jean Dye of U.S. EPA NRMRL provided editorial assistance.

This handbook was prepared for U.S. EPA NRMRL by Dr. Kirankumar Topudurti, Mr. Eric Monschein, and Ms. Suzette Tay of Tetra Tech EM Inc. (Tetra Tech) under a subcontract with Science Applications International Corporation (SAIC). Ms. Virginia Hodge served as the SAIC WAM for this project. Special acknowledgment is given to Ms. Jeanne Kowalski, Mr. Jon Mann, Mr. Stanley Labunski, Mr. Joseph Abboreno, and Dr. Harry Ellis of Tetra Tech and Ms. Hodge of SAIC for their assistance during the preparation of this handbook.

Executive Summary

Over the past 2 decades, environmental regulatory requirements have become more stringent because of increased awareness of the human health and ecological risks associated with environmental contaminants. Therefore, various treatment processes have been developed over the last 10 to 15 years in order to cost-effectively meet these requirements. One such group of processes is commonly referred to as advanced oxidation processes. These processes generally involve the generation and use of powerful but relatively nonselective transient oxidizing species, primarily the hydroxyl radical (•OH) and in some cases the singlet oxygen atom. The •OH can be generated by both photochemical and nonphotochemical means to oxidize environmental contaminants. This handbook discusses the applicability of advanced nonphotochemical oxidation (ANPO) processes for treatment of contaminated water, air, and soil. Similar information on advanced photochemical oxidation processes is presented in a separate document, "Handbook: Advanced Photochemical Oxidation Processes," published by the U.S. Environmental Protection Agency.

The primary purpose of this handbook is to summarize commercial-scale ANPO system performance and cost data for treatment of contaminated water, air, and soil. In addition, it presents similar information drawn from pilot- and bench-scale evaluations of ANPO processes to supplement the commercial-scale performance and cost data. The handbook is intended to serve as an ANPO reference document for remedial project managers, on-scene coordinators, state and local regulators, consultants, industry representatives, and other parties involved in management of contaminated water, air, and soil. Specifically, it is designed to assist these intended users in evaluating the applicability of ANPO processes and in selecting one or more ANPO processes for site-specific evaluation.

This handbook is not intended to summarize all the ANPO system performance and cost data available in the literature. Rather, it is intended to present information on state-of-the-art ANPO processes for treating contaminated environmental media. Commercial-scale ANPO system performance and cost data is presented in greater detail than pilot-scale results because the handbook is intended for environmental practitioners. Similarly, pilot-scale results are presented in greater detail than bench-scale results. In addition, pilot- and bench-scale results are presented only where they supplement commercial-scale results or where they fill information gaps, such as those associated with by-product formation.

This handbook presents an introduction (Section 1); provides background information on various ANPO processes, typical commercial-scale ANPO systems, and system design considerations (Section 2); and summarizes ANPO system performance and cost data for treating contaminated water, air, and soil (Sections 3, 4, and 5, respectively). References cited in each section are listed at the end of the section. Contact information for ANPO process vendors is presented in an appendix.

This executive summary briefly describes the ANPO processes and summarizes the commercial-scale system performance and cost data for treatment of contaminated water, air, and soil. Tables ES-1 and ES-2 at the end of this executive summary present commercial-scale performance and cost data for contaminated water and contaminated soil treatment, respectively, using various ANPO processes. At the time of this handbook's preparation, no commercial-scale ANPO systems for contaminated air treatment were available.

ANPO Processes

ANPO processes can be broadly divided into the following:(1) Fenton, (2) ozone (O_3)/hydrogen peroxide (H_2O_2), (3) electrochemical oxidation, (4) supercritical water oxidation (SCWO), (5) cavitation, (6) electrical discharge-based nonthermal plasma, (7) gamma-ray, (8) x-ray, and (9) electron-beam (E-beam). These ANPO processes and their variations are briefly described below.

Fenton Process

Decomposition of H_2O_2 using ferrous iron (Fe[II]) or ferric iron (Fe[III]) under acidic conditions to yield •OH is known as the classic Fenton process. Several variations of the Fenton process have been researched, and some of them have shown definite advantages over the classic Fenton process. For example, in both electro-Fenton and bio-Fenton processes, at least one of the two reactants is produced through an electrochemical process (electro-Fenton) or a microbial process (bio-Fenton), thus eliminating the need to continuously supply a chemical reagent. In another variation of the Fenton process known as complexed metal hydrogen peroxide oxidation, soluble organoiron complexes

are used to carry out the Fenton reaction in both acidic and neutral pH ranges.

Commercial-scale Fenton systems are currently available from the following vendors: (1) Geo-Cleanse International, Inc. (Geo-Cleanse); (2) In-Situ Oxidative Technologies, Inc. (ISOTEC); (3) Mantech Environmental Corporation; and (4) H&H Eco Systems, Incorporated (H&H). The Geo-Cleanse®, ISOTEC™, and Mantech Environmental Corporation CleanOX® systems can be applied in situ to treat contaminated water and soil. The Geo-Cleanse® system can also be applied ex situ to treat contaminated soil. The H&H Solid State Chemical Oxidation™ (SSCO™) system is applicable for ex situ treatment of soil. At the time of this handbook's preparation, no information was available on the CleanOX® system.

O_3/H_2O_2 Process

The O_3/H_2O_2 process, also known as the peroxone process, has been used for treatment of contaminated water. In this process, two •OH are formed for each mole of H_2O_2 reacting with two moles of O_3. The only commercial-scale O_3/H_2O_2 system available is the Applied Process Technology, Inc., HiPOx™ water treatment system. At the time of this handbook's preparation, no information was available on the HiPOx™ system.

Electrochemical Oxidation Process

The electrochemical oxidation process has been used for treatment of contaminated water. In this process, electricity flows through an electrochemical reactor consisting of electrodes separated by an electrolyte. Oxidation and reduction reactions occur on the surface of the electrodes at the electrode-electrolyte interface. Multiple reaction pathways have been proposed for •OH formation during electrochemical oxidation. These pathways include (1) oxidation of hydroxide ions to •OH in the anodic region under alkaline conditions, (2) formation of •OH when the water molecules or organic compounds present in the waste stream that are adsorbed on the anode surface are electrochemically oxidized, and (3) formation of •OH as a result of oxygen (O_2) evolution in the anodic region. Also, •OH may be produced electrochemically by using metallic iron as a sacrificial anode and by producing H_2O_2 at the cathode through electrolytic reduction of O_2 generated in the anodic region (electro-Fenton process).

No commercial-scale electrochemical oxidation systems are currently available. However, pilot-scale applications indicate that the electrochemical oxidation process has significant potential for treating contaminated water.

SCWO Process

SCWO involves oxidation of organics in water at temperatures and pressures above the critical point of water (the critical temperature is 374 °C, and the critical pressure is 22 megapascals) in the presence of an oxidant. Two oxidants commonly used in SCWO are O_2 and H_2O_2. When O_2 is the oxidant, free radicals are initially formed by removal of a hydrogen atom from the weakest C-H or O-H bonds of organic compounds present in contaminated water. This step is followed by several reactions involving organic radicals and O_2. H_2O_2 and organic hydroperoxides formed in these reactions decompose to form •OH. When H_2O_2 is the oxidant used in SCWO, decomposition of H_2O_2 under supercritical conditions yields •OH. Commercial-scale SCWO systems currently available for treatment of contaminated water include the General Atomics and Chematur Engineering AB (Chematur) Aqua Critox® SCWO systems.

The literature search conducted in developing this handbook revealed a single reference indicating that •OH may also be produced under subcritical conditions. However, this handbook does not discuss this process, which is known as wet air oxidation, because significant information on the effectiveness of the process is readily available in many environmental engineering books, as wet air oxidation has been in use for almost 40 years.

Cavitation Processes

Cavitation processes have been used for treatment of contaminated water. Cavitation refers to formation, growth, and implosive collapse of gas- or vapor-filled cavities (bubbles) in a liquid matrix. Collapse of the cavities produces localized high-temperature (about 5,000 °C) and high-pressure (about 50 megapascals) hot spots. The extreme conditions generated during cavitation result in •OH formation. Methods for inducing cavitation include ultrasonic irradiation of water (acoustic cavitation or sonolysis), high-voltage discharge in water (electrohydraulic cavitation), and creating a pressure differential (from below vapor pressure to above vapor pressure conditions) in a flowing water stream (hydrodynamic cavitation).

No commercial-scale acoustic cavitation or electrohydraulic cavitation systems are currently available. However, at the bench-scale level, the

acoustic cavitation process has been shown to be effective in treating contaminated water. The electrohydraulic cavitation process is still in the developmental stage. The only commercial-scale hydrodynamic cavitation system available is the Oxidation Systems, Inc. (OSI), HYDROX system for treatment of contaminated water.

Electrical Discharge-Based Nonthermal Plasma Processes

Electrical discharge-based nonthermal plasma processes have been used for treatment of contaminated air. A nonthermal plasma is a plasma in which the mean electron kinetic energy, or temperature, is significantly higher than that of the molecules in the bulk gas, which are at ambient temperature. Traditionally, nonthermal plasmas are produced by a gas discharge under a strong electric field. Under these conditions, both the electrons and ions are accelerated to high energies (several electron volts); however, because electrons have longer mean free pathlengths and lighter mass, they are typically accelerated to much higher energies than the ions.

Nonthermal plasmas can be generated by E-beam irradiation or electrical discharge. The main difference between these two processes involves the location where the high-energy electrons are generated. In the E-beam process, high-energy electrons are produced in an electron accelerator and then injected into a reaction chamber. A plasma is formed as the high-energy electrons collide with the molecules in the bulk gas. In the electrical discharge-based process, high-energy electrons are produced by an electric field generated between high-voltage electrodes in a reaction chamber. Specifically, free electrons gain kinetic energy as they drift along the high-voltage region between the electrodes, resulting in production of high-energy electrons. As in the E-beam process, a plasma forms as the high-energy electrons collide with the molecules in the bulk gas.

No commercial-scale electrical discharge-based nonthermal plasma systems are currently available. However, at the bench-scale level, the electrical discharge-based nonthermal plasma processes have been shown to be effective in treating contaminated air.

Gamma-Ray Process

The gamma-ray process has been used for treatment of contaminated water, air, and soil. Gamma rays are high-energy photons (electromagnetic radiation) emitted by excited atomic nuclei in transition to a state of lower excitation. When gamma rays collide with irradiated water, high-energy (secondary) electrons are generated along the trajectory of the photons. The high-energy electrons generated can initiate several thousand reactions as they dissipate energy in irradiated water. The reactions cause formation of three primary reactive species that can destroy organic compounds (•OH, aqueous electrons, and hydrogen radicals), thus making the gamma-ray process more similar to the E-beam process than to photochemical processes.

Gamma rays have a high penetration depth within irradiated water. For example, a water depth of about 76 centimeters (cm) is required to absorb 90 percent of a gamma-ray energy level of 1.25 million electron volts (MeV). Therefore, the gamma-ray process can be used to treat flowing waste streams as well as containerized liquid wastes.

No commercial-scale gamma-ray systems are currently available. However, at the bench-scale level, the gamma-ray process has been shown to be effective in treating contaminated water, air, and soil.

X-Ray Process

The x-ray process has been used for treatment of contaminated wastes. X-rays are high-energy photons generated by accelerating high-energy (incident) electrons in the form of an E-beam against a material with a high atomic number. X-rays are emitted when the high-energy electrons are decelerated in the nucleus field of the target atom in the solid material and when electrons in the target atom fall from one atomic shell to another. As with gamma rays, when x-rays collide with irradiated water, high-energy (secondary) electrons are generated along the trajectory of the photons. The high-energy electrons generated can initiate several thousand reactions as they dissipate energy in irradiated water. The reactions cause formation of three primary reactive species that can destroy organic compounds (•OH, aqueous electrons, and hydrogen radicals), thus making the x-ray process more similar to the E-beam process than to photochemical processes.

Like gamma rays, x-rays have a high penetration depth within irradiated water. For example, a 1-MeV x-ray has an effective water penetration depth of about 27 cm. Therefore, the x-ray process can also be used to treat flowing waste streams and containerized liquid wastes.

The x-ray process is still in the developmental stage, so no commercial-scale x-ray systems are currently available.

E-Beam Process

The E-beam process involves irradiation of water or air with a beam of high-energy electrons produced by an electron accelerator. Within the electron accelerator, an electric current (beam current) is passed through a tungsten filament in a vacuum to produce a stream of electrons. This electron stream is accelerated by applying an electric field at a specified voltage and is focused into a beam by collimating devices. In the E-beam process, the mechanism of •OH formation is determined by the medium being irradiated. E-beam irradiation of water causes formation of three primary reactive species that can destroy organic compounds (•OH, aqueous electrons, and hydrogen radicals). E-beam irradiation of air causes formation of a nonthermal plasma when high-energy electrons in the beam react with the bulk gas molecules.

High-energy electrons generated in the plasma react with wet air to form •OH. In dry-air applications, high-energy electrons in the nonthermal plasma react with O_2 to form oxygen radicals. These oxidizing radicals play an important role in generation of O_3 and the initial decomposition of some types of organics.

The depth to which an E-beam can penetrate irradiated water is significantly less than the depths associated with gamma rays and x-rays. For example, a 1-MeV electron deposits its energy in water within a depth of 4 millimeters. As a result, E-beams are typically used to treat contaminated water of relatively shallow depths.

A commercial-scale E-beam system called the High Voltage Environmental Applications, Inc. (HVEA), E-beam treatment system is currently available for treatment of contaminated water. In addition, the E-beam process has been shown to be effective in treating contaminated air at the pilot-scale level.

Contaminated Water Treatment

ANPO processes have been demonstrated to be effective for treatment of contaminated water. Water matrices to which ANPO has been applied include (1) contaminated groundwater, (2) industrial wastewater, (3) municipal wastewater, (4) contaminated drinking water, (5) landfill leachate, and (6) contaminated surface water. As shown below, a number of ANPO processes have been evaluated in terms of their effectiveness in treating various waterborne contaminants. Of these processes, the Fenton process has been evaluated for the most contaminant groups. The electro-hydraulic cavitation and x-ray processes appear to have been evaluated for the fewest.

Contaminant Group	ANPO Process Status for Contaminated Water Treatment							
	Fenton	O_3/H_2O_2	Electro-chemical Oxidation	SCWO	Acoustic Cavitation	Hydro-dynamic Cavitation	Gamma-Ray	E-Beam
Volatile Organic Compounds (VOC)	★	●	❑	❑	○	★	❑	★
Semivolatile Organic Compounds (SVOC)	★	○	○	●	○	★	○	❑
Polychlorinated Biphenyls (PCB)	❑	❑	❑	❑	❑	★	❑	❑
Pesticides and Herbicides	○	○	❑	❑	○	❑	❑	❑
Dioxins and Furans	❑	❑	❑	❑	❑	★	❑	❑
Explosives and Their Degradation Products	★	❑	❑	★	❑	❑	○	★
Humic Substances	❑	●	❑	❑	○	❑	❑	❑
Inorganics	○	○	○	★	○	❑	❑	❑
Dyes	●	○	●	○	○	❑	❑	●
Microbes	❑	○	❑	❑	❑	❑	●	●

Notes: ★ = Commercial-scale, ● = Pilot-scale, ○ = Bench-scale, ❑ = Developmental

Table ES-1 at the end of this executive summary presents commercial-scale performance and cost data for contaminated water treatment using various ANPO processes. This table shows that the Fenton and hydrodynamic cavitation processes have been found to be effective in treating various contaminants. Other ANPO processes, including the SCWO and E-beam processes, have also been found to be effective, but for fewer contaminant groups. The treatment costs vary widely depending on the types and concentrations of contaminants treated and the ANPO system used for treatment. The information sources cited in this handbook should be carefully reviewed before a cost comparison is made because the cost estimates presented in the literature were not developed using a consistent set of assumptions.

Contaminated Air Treatment

ANPO processes have been demonstrated to be effective for treatment of contaminated air. Air matrices to which ANPO has been applied include (1) air stripper off-gas, (2) industrial emissions, and (3) automobile emissions. As shown below, only a limited number of ANPO processes have been evaluated in terms of their effectiveness in treating various airborne contaminants. Of these processes, the electrical discharge-based nonthermal plasma and E-beam processes have been evaluated for the most contaminant groups, and the gamma-ray process has been evaluated for the fewest.

Contaminant Group	ANPO Process Status for Contaminated Air Treatment		
	Nonthermal Plasma	Gamma-Ray	E-Beam
VOCs	○	○	●
SVOCs	○	❑	❑
Nitrogen Oxides (NOx)	○	❑	●
Sulfur Oxides (SOx)	❑	❑	●
Metals	○	❑	❑

Notes: ● = Pilot-scale, ○ = Bench-scale, ❑ = Developmental

No commercial-scale performance and cost data is available for contaminated air treatment using ANPO processes. However, at the pilot-scale level, the E-beam process has been found to be effective in treating various contaminant groups.

Contaminated Soil Treatment

ANPO processes have been demonstrated to be effective for treatment of contaminated soil. As shown below, only two ANPO processes have been evaluated in terms of their effectiveness in treating various soil contaminants. Of these processes, the Fenton process has been evaluated for more contaminant groups than the gamma-ray process.

Contaminant Group	ANPO Process Status for Contaminated Soil Treatment	
	Fenton	Gamma-Ray
VOCs	★	❑
SVOCs	★	❑
PCBs	○	○
Pesticides and Herbicides	●	❑
Dioxins	●	❑
Explosives and Their Degradation Products	●	❑

Notes: ★ = Commercial-scale, ● = Pilot-scale, ○ = Bench-scale, ❑ = Developmental

Table ES-2 at the end of this executive summary presents commercial-scale performance and cost data for contaminated soil treatment using the Fenton process. This table shows that the Fenton process has been found to be effective in treating various contaminants.

Table ES-1. Summary of Commercial-Scale ANPO Processes for Contaminated Water Treatment

CONTAMINATED MATRIX	CONTAMINANT GROUP	PROCESS	SYSTEM	PERFORMANCE DATA			APPROXIMATE COST (2000 U.S. dollars)
				Contaminant	Concentration	Percent Removal	
Contaminated Groundwater	VOCs	Fenton	Geo-Cleanse® (in situ)	1,2-Dichloroethene (DCE)	860 to 930 micrograms per liter (µg/L)	40 to greater than (>) 99	$75,000 to $320,000 (including equipment rental, reagent, mobilization, and labor costs); $17 to $2,580 per cubic meter ($m^3$) of water treated
				Tetrachloroethene (PCE)	220 to 1,200 µg/L		
				Trichloroethene (TCE)	600 to 2,100 µg/L		
				Total VOCs (1,2-DCE; PCE; TCE; and vinyl chloride [VC])	5,000 µg/L	89	
				1,1,1-Trichloroethane (TCA)	280 milligrams per liter (mg/L)	84	
				2-Methylnaphthalene	640 µg/L	88	
				Naphthalene	640 µg/L	86	
				Benzene	600 µg/L	96	
				Toluene	23 µg/L	18	
				Ethylbenzene	670 µg/L	78	
				Xylene	1,500 µg/L	62	
				VC	17 µg/L	>99	
			ISOTEC™ (in situ)	Methyl-tert-butyl ether (MTBE) and benzene, toluene, ethylbenzene, and xylene (BTEX)	> 54 mg/L	>99	$110,000 to $180,000 (no breakdown of cost available); treatment cost per m^3 of water treated unavailable
				Total VOCs (1,2-DCE; PCE; and TCE)	> 150 mg/L		
		Hydrodynamic Cavitation	OSI HYDROX (ex situ)	2-Methylnaphthalene	260 mg/L	78	$200,000 (including capital cost and operation and maintenance [O&M] cost of $0.65/$m^3$ of water treated); treatment cost per m^3 of water treated unavailable
				Naphthalene	340 mg/L	75	
		E-Beam	HVEA (ex situ)	1,2-DCE	Less than 40 to 45 µg/L	>90 and >91	$1.21 to $1.77/$m^3$ of water treated (including treatability study and system design, mobilization and startup, one-time system capital, labor, maintenance, residual waste shipping, and demobilization costs)
				PCE	9,200 to 14,000 µg/L	96 to 99	
				TCE	25,000 to 37,000 µg/L	97 to 99	
				Carbon tetrachloride	150 to 400 µg/L	>98	
				Chloroform	240 to 650 µg/L	80	
				1,2-Dichloroethane (DCA)	210 to 840 µg/L	57	
				1,1,1-TCA	200 to 500 µg/L	81	
				Benzene	220 to 550 µg/L	>98	
				Toluene	170 to 360 µg/L		
				Ethylbenzene	95 to 250 µg/L		
				Xylene	85 to 200 µg/L		
				MTBE	170 µg/L	92 to 99	

Table ES-1. Summary of Commercial-Scale ANPO Processes for Contaminated Water Treatment (Continued)

CONTAMINATED MATRIX	CONTAMINANT GROUP	PROCESS	SYSTEM	PERFORMANCE DATA			APPROXIMATE COST (2000 U.S. dollars)
				Contaminant	Concentration	Percent Removal	
Contaminated Groundwater (Continued)	SVOCs	Fenton	Geo-Cleanse® (in situ)	Polynuclear aromatic hydrocarbons (PAH)	400 to 630 µg/L	90 to 99	$130,000 (including equipment rental, reagent, mobilization, and labor costs); $1,300/m³ of water treated
		Hydrodynamic Cavitation	OSI HYDROX (ex situ)	Acenaphthene	300 mg/L	92	$200,000 (including capital cost and O&M cost of $0.65/m³ of water treated); treatment cost per m³ of water treated unavailable
				Anthracene	21 mg/L	>99	
				Benzo(a)anthracene	24 mg/L		
				Chrysene	20 mg/L		
				Fluoranthene	100 mg/L	70	
				Fluorene	120 mg/L	91	
				Phenanthrene	250 mg/L	55	
				Pyrene	160 mg/L	83	
	PCBs			PCBs	3 mg/L	>99	$65,000 (including capital cost and O&M cost of $0.07/m³ of water treated); treatment cost per m³ of water treated unavailable
	Dioxins and Furans			Dibenzofuran	110 mg/L	91	$200,000 (including capital cost and O&M cost of $0.65/m³ of water treated); treatment cost per m³ of water treated unavailable
	Explosives and Their Degradation Products	Fenton	Geo-Cleanse® (in situ)	Octahydro-1,3,5,7-tetranitro-1,3,5,7-tetrazocine (HMX); hexahydro-1,3,5-trinitro-1,3,5-triazine (RDX); and 2,4,6-trinitrotoluene (TNT)	140 µg/L (total)	80	$97,000 (including equipment rental, reagent, mobilization, and labor costs); treatment cost per m³ of water treated unavailable
		SCWO	General Atomics (ex situ)	CYH propellant	Unknown	Total organic carbon (TOC): >99	Unknown
		E-Beam	HVEA (ex situ)	Dimethyl methane phosphoric acid ester (DMMP)	47 to 62 mg/L	74 to 89	Unknown
Industrial Wastewater	Unspecified Organics	SCWO	Chematur Aqua Critox® (ex situ)	TOC	>50,000 mg/L	>99	Unknown
	Inorganics			Ammonia	6,900 mg/L	>99	

Table ES-2. Summary of Commercial-Scale ANPO Processes for Contaminated Soil Treatment

CONTAMINATED MATRIX	CONTAMINANT GROUP	PROCESS	SYSTEM	PERFORMANCE DATA			APPROXIMATE COST (2000 U.S. dollars)
				Contaminant	Concentration	Percent Removal	
Contaminated Soil	VOCs	Fenton	Geo-Cleanse® (in situ)	2-Methylnaphthalene	290 micrograms per kilogram (µg/kg)	>99	$74,000 to $2 million (including equipment rental, reagent, mobilization, and labor costs); $61 to $350/m^3 of soil treated
				Naphthalene	210 µg/kg		
				Petroleum hydrocarbons (gasoline range)	58,000 µg/kg	99	
				Benzene	440 µg/kg	>99	
				Toluene	210 µg/kg		
				Ethylbenzene	3,000 µg/kg	83	
				Xylenes	10,000 µg/kg	86	
				TCE	22,000 milligrams per kilogram (mg/kg)	>99	
			Geo-Cleanse® (ex situ)	1,2-DCE	1,800 µg/kg	>99	$39,000 (including equipment rental, reagent, mobilization, and labor costs); $2,400/m^3 of soil treated
				Methylene chloride	3,500 µg/kg		
				PCE	690 µg/kg		
				TCE	43,000 µg/kg		
				VC	15 µg/kg		
	SVOCs		Geo-Cleanse® (in situ)	Petroleum hydrocarbons (diesel range)	270,000 µg/kg	98	$74,000 to $130,000 (including equipment rental, reagent, mobilization, and labor costs); $290 to $350/m^3 of soil treated
				PAHs	26 to 72 mg/kg	96 to 98	
			ISOTEC™ (in situ)	Petroleum hydrocarbons	14,000 mg/kg	96	$73,000 (including equipment, reagent, mobilization and demobilization, and labor costs); treatment cost per m^3 of soil treated unavailable
			H&H SSCO™ (ex situ)	Carcinogenic PAHs	680 mg/kg	>85	$74/m^3 of soil treated (including capital, reagent, mobilization and demobilization, and labor costs)
				Pentachlorophenol (PCP)	160 mg/kg	No PCP detected in treated soil	
				Petroleum hydrocarbons	8,000 to 8,500 mg/kg	>88	$43 to $73/m^3 of soil treated (including capital, reagent, mobilization and demobilization, and labor costs)

Section 1
Introduction

Over the past two decades, environmental regulatory requirements have become more stringent because of increased awareness of the human health and ecological risks associated with environmental contamination resulting from improper waste management practices. In many cases, conventional treatment processes, such as air stripping, carbon adsorption, biological treatment, and chemical oxidation using ozone (O_3) or hydrogen peroxide (H_2O_2), have limitations. For example, stripping and adsorption merely transfer contaminants from one medium to another, whereas biological treatment and conventional chemical oxidation have low removal rates for many environmental contaminants, including chlorinated organics. Therefore, various alternative treatment processes have been developed over the last 10 to 15 years in order to cost-effectively meet environmental regulatory requirements. One such group of processes is commonly referred to as advanced oxidation processes.

Advanced oxidation processes generally involve generation and use of powerful but relatively nonselective transient oxidizing species, primarily the hydroxyl radical (•OH); in some vapor-phase advanced oxidation processes, singlet oxygen atoms ($O[^1D]$) and oxygen radicals have also been identified as the dominant oxidizing species. Table 1-1 shows that •OH has the highest thermodynamic oxidation potential, which is perhaps why •OH-based oxidation processes have gained the attention of many advanced oxidation process developers. In addition, as shown in Table 1-2, most environmental contaminants react 1 million to 1 billion times faster with •OH than with O_3, a conventional oxidant. •OH can be generated by both photochemical processes (for example, ultraviolet [UV] radiation in combination with O_3, H_2O_2, or a photosensitizer) and nonphotochemical processes (for example, electron beam [E-beam] irradiation, O_3 in combination with H_2O_2, or Fenton's reagent). This handbook discusses the applicability of advanced nonphotochemical oxidation (ANPO) processes for treatment of contaminated water, air, and soil. Similar information on advanced photochemical oxidation processes is presented in a separate document (EPA/625/R-98/004) published by the U.S. Environmental Protection Agency (U.S. EPA) (1998).

Table 1-1. Oxidation Potential of Several Oxidants in Water

Oxidant	Oxidation Potential (electron volt)[a]
•OH	2.80
$O(^1D)$	2.42
O_3	2.07
H_2O_2	1.77
Perhydroxy radical	1.70
Permanganate ion	1.67
Chlorine dioxide	1.50
Chlorine	1.36
Oxygen (O_2)	1.23

Note:

[a] Source: *CRC Handbook of Chemistry and Physics*, 1985

This section discusses the purpose and scope (Section 1.1) and organization (Section 1.2) of this handbook.

1.1 Purpose and Scope

The primary purpose of this handbook is to summarize commercial-scale ANPO system performance and cost data for treatment of contaminated water, air, and soil. In addition, it presents similar information drawn from pilot- and bench-scale evaluations of ANPO processes to supplement the commercial-scale performance and cost data. The handbook is intended to serve as an ANPO reference document for remedial project managers, on-scene coordinators, state and local regulators, consultants, industry representatives, and other parties involved in management of contaminated water, air, and soil. Specifically, it assists these intended users in evaluating the applicability of ANPO processes and in selecting one or more ANPO processes for site-specific evaluation.

For the purposes of this handbook, commercial-, pilot-, and bench-scale systems are defined as follows:

Table 1-2. Overall Rate Constants for O_3 and •OH Reactions with Organic Compounds in Water

Compound Type	Overall Rate Constant (liter per mole-second)[a,b]	
	O_3	•OH
Acetylenes	50	10^8 to 10^9
Alcohols	10^{-2} to 1	10^8 to 10^9
Aldehydes	10	10^9
Alkanes	10^{-2}	10^6 to 10^9
Aromatics	1 to 10^2	10^8 to 10^{10}
Carboxylic acids	10^{-3} to 10^{-2}	10^7 to 10^9
Chlorinated alkenes	10^{-1} to 10^3	10^9 to 10^{11}
Ketones	1	10^9 to 10^{10}
Nitrogen-containing organics	10 to 10^2	10^8 to 10^{10}
Olefins	1 to 450 x 10^3	10^9 to 10^{11}
Phenols	10^3	10^9 to 10^{10}
Sulfur-containing organics	10 to 1.6 x 10^3	10^9 to 10^{10}

Note:

a Sources: Cater and others, 1990; Dussert, 1997

b Because the overall rate constants may not actually reflect the effectiveness of the oxidant in question, the reader should calculate the oxidant's effectiveness by taking project-specific reaction conditions into consideration (for example, water chemistry parameters such as pH).

- A **commercial-scale system** is a system manufactured by an ANPO process vendor and available for purchase or leasing from the vendor.

- A **pilot-scale system** is a system designed and fabricated by an engineering firm to (1) estimate the performance and cost of a particular ANPO process, (2) identify field operational problems of the process and their resolutions, and (3) evaluate scale-up requirements for implementing the process. A commercial-scale system is selected after the pilot-scale system proves to be successful.

- A **bench-scale system** is a system that (1) is of much smaller scale than commercial- and pilot-scale systems, (2) is used to evaluate the feasibility of a particular ANPO process, (3) is used to gain insight into the process kinetics and mechanisms, and (4) may be used to generate a preliminary cost estimate for comparison with the costs of alternative processes. A pilot-scale evaluation of a system may follow successful performance by a particular ANPO process at the bench-scale level.

This handbook is not intended to summarize all the ANPO performance and cost data available in the literature. Rather, it is intended to present information on state-of-the-art ANPO processes for treating contaminated environmental media. Commercial-scale ANPO system performance and cost data is presented in greater detail than pilot-scale results because the handbook is intended for environmental practitioners. Similarly, pilot-scale results are presented in greater detail than bench-scale results. In addition, pilot- and bench-scale results are presented only where they supplement commercial-scale ANPO system evaluation results or where they fill information gaps, such as those associated with by-product formation.

This handbook does not address nonenvironmental ANPO process applications. For example, it does not discuss ANPO process applications in industrial operations, such as use of an ultrasonic irradiation process for surface cleaning or use of an electrochemical process for electroplating.

Finally, the information included in this handbook is derived from an extensive literature review, and thus the level of detail presented varies depending on the information sources available. Specifically, the treatment costs included should be considered only order-of-magnitude estimates because most of the information sources do not state the assumptions made in estimating treatment costs. To facilitate quick ANPO process comparisons, cost estimates from the literature were adjusted for inflation using implicit price deflators for gross national product and are presented in 2000 U.S. dollars herein. This approach has been proposed by the U.S. Department of Commerce and is used to estimate financial assurance requirements under Resource Conservation and Recovery Act Subtitle C as documented in 40 *Code of Federal Regulations* 264.142(b). Cost estimates reported in currencies other than U.S. dollars were converted to U.S. dollars using the exchange rates for the appropriate years before adjusting the estimates for inflation.

1.2 Organization

This handbook is divided into five sections and one appendix. Section 1 presents an introduction to the handbook. Section 2 provides background information on various ANPO processes, typical commercial-scale ANPO systems, and system design considerations. Sections 3, 4, and 5 summarize ANPO system performance and cost data for treating contaminated water, air, and soil, respectively. References cited in each section are

listed at the end of the section. The appendix contains ANPO process vendor contact information.

To facilitate user access to information, the handbook presents performance and cost data for each environmental medium by matrix, contaminant group, scale of evaluation, process evaluated, and process vendor or proprietary system (see Figure 1-1). For example, where performance and cost data for water (the medium) is summarized, groundwater (matrix 1) is discussed before other matrices. For the groundwater matrix, volatile organic compounds (VOC) or contaminant group 1 is discussed before other contaminant groups. For the VOC contaminant group, commercial-scale applications are summarized before pilot- and bench-scale evaluations. Similarly, the commercial-scale applications are organized by ANPO process and by vendor or proprietary process. If performance and cost data for a given process is available for both in situ and ex situ applications, in situ applications are discussed before ex situ applications.

If bench-scale results for a particular contaminant were derived using a synthetic matrix (for example, distilled water spiked with target contaminants), the results are included under the matrix that is described first. For example, in general, bench-scale results derived using synthetic wastewater are presented under the groundwater matrix because the groundwater matrix is the first matrix discussed in Contaminated Water Treatment (Section 3). However, bench-scale results for dye removal from synthetic wastewater are not presented under the groundwater matrix because no commercial- or pilot-scale results are available for dye removal from groundwater. Therefore, bench-scale results for dye removal from synthetic wastewater are appropriately presented under the industrial wastewater matrix.

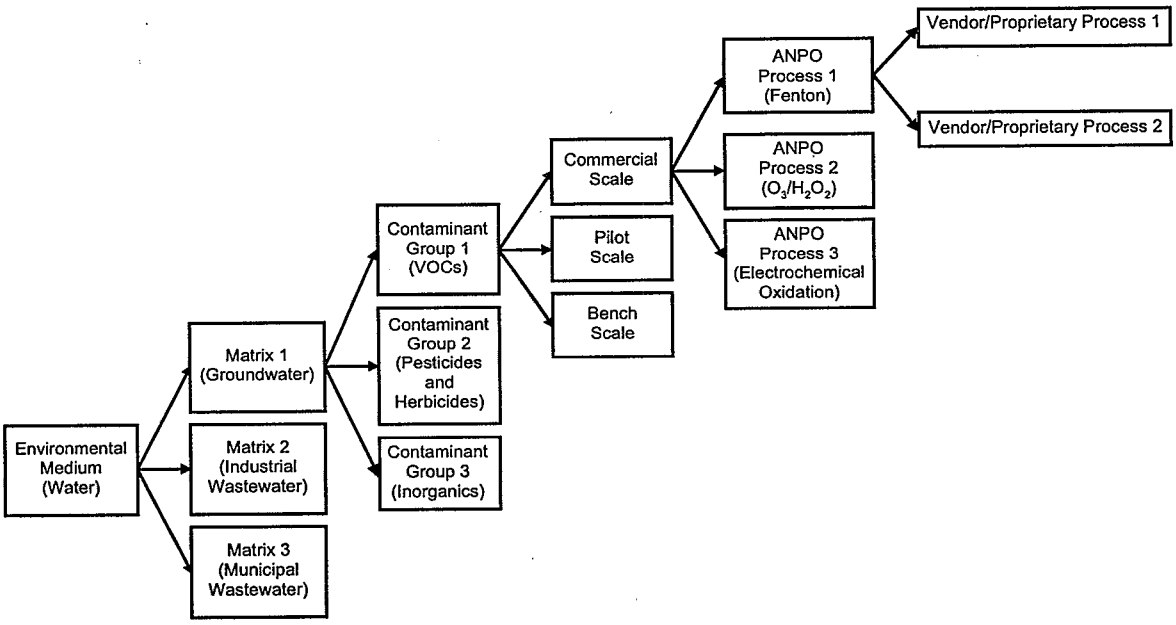

Note: The information in parentheses represents a typical example.

Figure 1-1. Performance and cost data organization.

1.3 References

Cater, S.R., K.G. Bircher, and R.D.S. Stevens. 1990. "Rayox®: A Second Generation Enhanced Oxidation Process for Groundwater Remediation." *Proceedings of a Symposium on Advanced Oxidation Processes for the Treatment of Contaminated Water and Air.* Toronto, Canada. June.

CRC Handbook of Chemistry and Physics. 1985. Edited by R.C. Weast, M.J. Astle, and W.H. Beyer. CRC Press, Inc. Boca Raton, Florida.

Dussert, B.W. 1997. "Advanced Oxidation." *Industrial Wastewater.* November/December. Pages 29 through 34.

U.S. Environmental Protection Agency (U.S. EPA). 1998. "Handbook: Advanced Photochemical Oxidation Processes." Office of Research and Development, Washington, DC. EPA/625/R-98/004. December.

Section 2
Background

This section provides background information on ANPO processes (Section 2.1), commercial-scale ANPO systems (Section 2.2), and ANPO system design considerations (Section 2.3). The level of detail included in this section facilitates understanding of the performance and cost data included in Sections 3, 4, and 5 of this handbook. For additional information, the references listed in Section 2.4 should be consulted.

2.1 ANPO Processes

As described in Section 1, ANPO processes use •OH generated by nonphotochemical means to oxidize environmental contaminants. ANPO processes can be broadly divided into the following: (1) Fenton, (2) O_3/H_2O_2, (3) electrochemical oxidation, (4) supercritical water oxidation (SCWO), (5) cavitation, (6) electrical discharge-based nonthermal plasma, (7) gamma-ray, (8) x-ray, and (9) E-beam. These ANPO processes and their variations are briefly described below.

The literature search conducted in developing this handbook revealed a single reference indicating that •OH may be produced under subcritical conditions as opposed to supercritical conditions (SCWO). However, this handbook does not discuss this process, which is known as wet air oxidation, because significant information on the effectiveness of the process is readily available in many environmental engineering books, as wet air oxidation has been in use for almost 40 years.

2.1.1 Fenton Process

The Fenton process has been used for treatment of contaminated water and soil. The dark reaction of ferrous iron (Fe[II]) with H_2O_2 known as Fenton's reaction (Fenton, 1894), which is shown in Equation 2-1, has been known for over a century.

$$\mathrm{Fe(II)} + \mathrm{H_2O_2} \rightarrow \mathrm{Fe(III)} + \mathrm{OH^-} + \bullet\mathrm{OH} \qquad (2\text{-}1)$$

The •OH thus formed can react with Fe(II) to produce ferric iron (Fe[III]) as shown in Equation 2-2.

$$\bullet\mathrm{OH} + \mathrm{Fe(II)} \rightarrow \mathrm{Fe(III)} + \mathrm{OH^-} \qquad (2\text{-}2)$$

Alternatively, the •OH can react with and initiate oxidation of organic pollutants present in a waste stream.

Decomposition of H_2O_2 is also catalyzed by Fe(III) (Walling, 1975). In this process, H_2O_2 is decomposed to the water molecule (H_2O) and O_2, and a steady-state concentration of Fe(II) is maintained during the decomposition. This process is shown in Equations 2-3 and 2-4.

$$\begin{aligned}\mathrm{Fe(III)} + \mathrm{H_2O_2} &\Leftrightarrow \left[\mathrm{Fe(III)}\ldots\mathrm{O_2H}\right]^{2+} + \mathrm{H^+} \\ &\Leftrightarrow \mathrm{Fe(II)} + \mathrm{HO_2^{\bullet}} + \mathrm{H^+}\end{aligned} \qquad (2\text{-}3)$$

$$\mathrm{HO_2^{\bullet}} + \mathrm{Fe(III)} \rightarrow \mathrm{Fe(II)} + \mathrm{H^+} + \mathrm{O_2} \qquad (2\text{-}4)$$

The Fe(II) ions react with H_2O_2 to generate •OH (see Equation 2-1), which then reacts with organic pollutants. However, the initial rate of removal of organic pollutants by the Fe(III)/H_2O_2 reagent is much lower than that for the Fe(II)/H_2O_2 reagent, perhaps because of the lower reactivity of Fe(III) with H_2O_2 (Pignatello, 1992).

Although •OH is generally believed to be the primary oxidant in the Fenton process, some researchers argue that oxidation may not always involve •OH. For example, Wink and others (1994) indicate that a metallo-oxo species such as the solvated ferryl ion is the primary oxidant in the Fenton process-mediated oxidation of N-nitrosodimethylamine.

The pH of the reaction system is an important parameter for the Fenton process. The classic Fenton process is most effective at a pH level of about 3 (Walling, 1975; Pignatello, 1992). Although the process may be carried out at higher pH levels (up to a pH of 6), the reaction rates are generally expected to decrease with increasing pH (Lipczynska-Kochany and others, 1995). In addition, increasing the pH from 3 to 6 decreases the solubility of iron species, which in turn decreases the amount of iron available for the Fenton process and results in significant sludge generation problems.

A variation of the classic Fenton process known as the electro-Fenton process has been examined by many researchers. The electro-Fenton process combines an electrochemical process with the Fenton process and involves reactions between Fe(II) and H_2O_2, in which at least one of the two reactants is produced electrolytically. Chou and others (1999) summarize four methods by which the electro-Fenton process can be carried out. In the first method, H_2O_2 is added to a system, and Fe(II) is

produced by oxidation of metallic iron (Fe[0]) at a sacrificial anode. In the second method, Fe(II) is added to the system, and H_2O_2 is electrogenerated at the cathode by reducing the dissolved O_2 produced at the anode through electrolysis of H_2O. The third method involves a Fenton sludge recycling (FSR) system, which contains two reactors. In this method, both H_2O_2 and Fe(II) are added to the first reactor. The ferric (III) hydroxide sludge generated in the first reactor is electrolytically reduced to Fe(II) in the second reactor. Fe(II) is then recycled to the first reactor, thereby eliminating the need for continuous addition of Fe(II). The fourth method is similar to the third method except that (1) Fe(III) is added to the system instead of Fe(II) and (2) both the classic Fenton process and sludge recycling are carried out in one reactor.

Another variation of the classic Fenton process is studied by Lin and others (1997). The study shows that combining the Fenton process with ultrasonic irradiation process yields greater removal and mineralization of 2-chlorophenol (CP). The researchers, however, do not offer a theoretical basis for combining the Fenton and ultrasonic irradiation processes. It is unclear whether the greater removal and mineralization are associated with synergistic effects or with simple additive effects of the Fenton and ultrasonic irradiation processes.

Falcon and others (1995) identify a Wet Peroxide Oxidation® (WPO®) process in which the Fenton reaction occurs at temperatures slightly below 100 °C. Regarding oxidation of carboxylic acids, the researchers observed that the WPO® process could be catalyzed using a combination of the transition metal ions copper (II), manganese (II), and Fe(II). The research results show the significant synergistic effect of the three transitional catalysts.

The ability of a process to overcome pH constraints is important in environmental applications because highly acidic pH conditions may not occur in the environment and because adjusting the pH to very low levels for in situ soil treatment could damage the subsurface microbial community. Tachiev and others (1998) identify a modified Fenton process called the complexed metal hydrogen peroxide oxidation system (CMHPOS) that can be successfully used up to a pH of 9. The CMHPOS uses soluble iron complexes to carry out the Fenton reaction in both the acidic and neutral pH ranges. Specifically, the researchers show that ligands such as ethylenediaminetetraacetic acid (EDTA), ethylenebis(oxyethylenenitrilo)tetraacetic acid, and diethylenetriaminepentaacetic acid form soluble complexes with Fe(II) and Fe(III) and therefore do not require highly acidic conditions for the Fenton process to be effective. McKinzi and Dichristina (1999) identify a microbially driven Fenton process that may be used under neutral pH conditions. In this process, the facultative anaerobe *Shewanella putrifaciens* strain 200 is used as a catalyst for both Fe(III) reduction and H_2O_2 production as the process alternates between anaerobic and aerobic conditions. Fe(III) is reduced under anaerobic conditions to produce Fe(II), and H_2O_2 is produced as a metabolic by-product under aerobic conditions, thus eliminating the need for a continuous supply of Fe(II) and external addition of H_2O_2.

Some compounds commonly present in water may react with the reactive species formed by the Fenton process, thereby exerting an additional demand for reactive species on the system. These compounds are called scavengers, and they can potentially impact system performance. A scavenger is defined as any compound in water other than the target contaminants that consumes reactive species. Carbonate and bicarbonate ions are examples of •OH scavengers found in most natural waters and wastewaters. Therefore, alkalinity is an important system operating parameter. If alkalinity is high, influent pH adjustment may be required to shift the carbonate-bicarbonate equilibrium from carbonate (a scavenger) to carbonic acid (not a scavenger). According to Lipczynska-Kochany and others (1995), several anions such as phosphate, sulfate, and chloride, which are typically present in groundwater and surface water, could interfere with the effectiveness of the Fenton process. Specifically, (1) phosphate acts as a •OH scavenger; (2) sulfate, which reacts with Fe(II) to form an ion pair ($FeSO_4^0$), inhibits •OH formation; and (3) chloride, which also reacts with Fe(II) to form an ion pair ($FeCl^+$ or $FeCl_2^0$), acts as both a •OH formation inhibitor and a •OH scavenger. However, the radicals that are formed upon reaction of •OH with phosphate and sulfate are also fairly reactive with organic contaminants.

Commercial-scale Fenton systems are currently available from the following vendors: (1) Geo-Cleanse International, Inc. (Geo-Cleanse); (2) In-Situ Oxidative Technologies, Inc. (ISOTEC); (3) Mantech Environmental Corporation; and (4) H&H Eco Systems, Incorporated (H&H). The Geo-Cleanse®, ISOTEC™, and Mantech Environmental Corporation CleanOX® systems can be applied in situ to treat contaminated water and soil. The Geo-Cleanse® system can also be applied ex situ to treat contaminated soil. The H&H Solid State Chemical Oxidation™ (SSCO™) system is applicable for ex situ treatment of soil. At the time of

this handbook's preparation, no information was available on the CleanOX® system.

Geo-Cleanse offers an ex situ soil treatment system and an in situ soil and groundwater treatment system. The Geo-Cleanse® systems are based on the classic Fenton process in which Fe(II) is added in the form of ferrous sulfate ($FeSO_4$). Sulfuric acid (H_2SO_4) (66 percent technical grade) and phosphoric acid (H_3PO_4) (85 percent technical grade) may be added to adjust the pH to the range of 5.5 to 6.0. A stabilizer (calcium phosphate) is also added to delay formation of free radicals.

The ISOTEC™ system is an in situ soil and groundwater treatment system based on a modified Fenton process. Specifically, ISOTEC uses proprietary catalysts composed of active components that chelate iron and keep it in dissolved form as an organometallic complex. The form of iron and the chelating components used are site-specific and are determined through bench- and pilot-scale evaluations. According to ISOTEC, its modification to the classic Fenton process allows the system to effectively treat organic contaminants in the subsurface over a pH range of 2.5 to 8.5. ISOTEC also uses proprietary stabilizer and mobility control agents that control formation of •OH and dispersion of its precursors.

The H&H SSCO™ system is an ex situ soil treatment system based on a modified Fenton process. In the SSCO™ process, Fe(0), which is available as a waste product from many industries, is applied in powder form to soil in order to carry out the Fenton reaction. According to H&H, Fe(0) is a more economical form of iron than Fe(II) or Fe(III). The SSCO™ process is carried out at pH values ranging from 5 to 7.

2.1.2 O_3/H_2O_2 Process

The O_3/H_2O_2 process, also known as the peroxone process, has been used for treatment of contaminated water. H_2O_2 can initiate decomposition of O_3 with the hydroperoxide ion (HO_2^-) as shown in Equations 2-5 and 2-6 (Pedit and others, 1997).

$$H_2O_2 \Leftrightarrow HO_2^- + H^+ \quad (2\text{-}5)$$

$$HO_2^- + O_3 \rightarrow O_3^{\bullet -} + HO_2^{\bullet} \quad (2\text{-}6)$$

The products of Equation 2-6 participate in •OH formation as shown in Equations 2-7a and 2-7b and 2-8a through 2-8d.

$$O_3^{\bullet -} + H^+ \rightarrow HO_3^{\bullet} \quad (2\text{-}7a)$$

$$HO_3^{\bullet} \rightarrow \bullet OH + O_2 \quad (2\text{-}7b)$$

$$HO_2^{\bullet} \Leftrightarrow H^+ + O_2^{\bullet -} \quad (2\text{-}8a)$$

$$O_2^{\bullet -} + O_3 \rightarrow O_3^{\bullet -} + O_2 \quad (2\text{-}8b)$$

$$O_3^{\bullet -} + H^+ \rightarrow HO_3^{\bullet} \quad (2\text{-}8c)$$

$$HO_3^{\bullet} \rightarrow \bullet OH + O_2 \quad (2\text{-}8d)$$

These equations may be combined to represent the overall reaction between H_2O_2 and O_3 that yields •OH as shown in Equation 2-9.

$$H_2O_2 + 2O_3 \rightarrow 2 \bullet OH + 3O_2 \quad (2\text{-}9)$$

Equation 2-9 shows that two •OH are formed for each mole of H_2O_2 reacting with two moles of O_3. However, H_2O_2 present in quantities significantly exceeding stoichiometry is known to scavenge •OH and thereby reduce the overall effectiveness of the O_3/H_2O_2 process (Glaze and others, 1987).

Alkalinity is an important parameter in the O_3/H_2O_2 process. If alkalinity is high, influent pH adjustment may be required for irradiated matrices to shift the carbonate-bicarbonate equilibrium from carbonate (a scavenger) to carbonic acid (not a scavenger). Additional, detailed information on alkalinity effects is provided by Peyton and others (1998).

Processes that use O_3 or H_2O_2 alone to produce •OH have also been studied by several researchers. •OH has been proposed as an intermediate in the base-catalyzed decomposition of O_3 (Weiss, 1935). Such an O_3 process is typically carried out at high pH because increasing the pH is expected to increase •OH formation. However, increasing the pH results in a shift in bicarbonate to carbonate species in water containing bicarbonate or carbonate alkalinity. Because the rate constant for the reaction of •OH with the carbonate ion is about 28 times greater than that with the bicarbonate ion (Buxton and others, 1988), the O_3 process is not considered to be a viable alternative. Urs and Hoigne (1998) identify a process known as the carbozone process that is based on activated carbon catalyzed conversion of O_3 to form •OH. Their study shows that the stoichiometric yield of •OH is comparable to that of non-activated carbon-catalyzed processes and that the carbozone process proceeds at a greater rate. Martinez and others (1993) study the effect of adding H_2O_2 to an air stream at high temperatures (greater than [>] 600 °C). The study shows that H_2O_2 can be thermally dissociated in air streams at such temperatures to form •OH.

The only commercial-scale O_3/H_2O_2 system available is the Applied Process Technology, Inc., HiPOx™ water treatment system. At the time of this handbook's preparation, no information was available on the HiPOx™ system. However, several pilot-scale studies indicate that the O_3/H_2O_2 process has significant potential for treating contaminated water.

2.1.3 Electrochemical Oxidation Process

The electrochemical oxidation process has been used for treatment of contaminated water. In this process, electricity flows through an electrochemical reactor consisting of electrodes separated by an ionic conductor (electrolyte). Oxidation and reduction reactions are carried out on the surface of the electrodes at the electrode-electrolyte interface. The electrode at which oxidation occurs is called the anode, whereas the reduction reaction occurs at the cathode.

Multiple reaction pathways have been proposed for •OH formation during electrochemical oxidation. According to Huang and Chu (1991), hydroxide ions (OH^-) are oxidized to •OH in the anodic region under alkaline conditions. Polcaro and others (in press) and Comninellis and Pulgarin (1993) report that •OH are formed when the organic compounds present in the waste stream or H_2O adsorbed on the anode surface are electrochemically oxidized. In addition, •OH can be formed as a result of O_2 evolution in the anodic region (Polcaro and Palmas, 1997). •OH may also be produced electrochemically by using Fe(0) as a sacrificial anode and producing H_2O_2 at the cathode through electrolytic reduction of O_2 generated in the anodic region. This process is referred to as the electro-Fenton process. Variations of the electro-Fenton process are described in Section 2.1.1.

Recent studies indicate that •OH formation depends on the chemical or electrochemical characteristics of the anode. According to Rodgers and others (1999), oxidation by •OH occurs when tin dioxide and iridium dioxide anodes are used, whereas direct electron transfer oxidation occurs when a lead dioxide anode is used. Koppang and others (1999) also report that •OH formation occurs during the initial stage of O_2 evolution at the nondiamond carbon impurity sites of a diamond thin-film electrode.

Commercial-scale electrochemical oxidation systems are not currently available. However, pilot-scale applications show that the electrochemical oxidation process has significant potential for treating contaminated water.

2.1.4 SCWO Process

As the name implies, the SCWO process has been used for treatment of contaminated water. SCWO involves oxidation of organics in water at temperatures and pressures above the critical point of water (critical temperature = 374 °C and critical pressure = 22 megaPascals [MPa]) in the presence of an oxidant such as O_2 or H_2O_2. In practice, SCWO is typically performed at 400 to 650 °C and at 25 MPa (Schwinkendorf and others, 1995b). Below the critical point, the liquid and gas phases of water can coexist in equilibrium. Above the critical point, water exists in only one phase, which is referred to as supercritical water.

The physical and chemical properties of supercritical water, including its density, viscosity, diffusivity, ion mobility, and dielectric constant, are markedly different from those of water under standard conditions (Gloyna and Li, 1998). For example, at 25 MPa the density of water decreases from 0.507 to 0.0786 gram per cubic centimeters as the temperature increases from 375 to 550 °C; similarly, the viscosity of water decreases from 10,000 to 597 micropoises as the temperature increases from 375 to 450 °C. As a result, diffusivity and ion mobility are higher under supercritical conditions. In addition, as the density of water decreases, hydrogen bonding and the solvent polarity of water decrease. The dielectric constant (relative permittivity), which is a measure of hydrogen bonding and reflects the polarizability of molecules, decreases from 78.5 at standard temperature and pressure to about 5 under supercritical conditions. Supercritical water thus exhibits properties similar to those of a nonpolar organic solvent. As a result, sparingly soluble, nonpolar organic compounds and oxidants become highly soluble in or even miscible with supercritical water. Consequently, an SCWO system is not mass transfer-limited and has high reaction rates.

SCWO of organics proceeds by means of a free-radical reaction mechanism. Because of the elevated temperatures that occur under supercritical conditions, pyrolysis can occur; however, pyrolysis is not likely to be a major pathway for contaminant destruction because its reaction rates are orders of magnitude lower than those of oxidation (Gloyna and Li, 1995). Two oxidants commonly used in SCWO are O_2 and H_2O_2 (Gloyna and Li, 1998). When O_2 is the oxidant, free radicals are initially formed by removal of a hydrogen atom from the weakest C-H

or O-H bonds of the organic compounds present in the contaminated water. This step is followed by several reactions involving organic radicals and O_2 as shown in Equations 2-10 through 2-13 (Duffy and others, 2000).

$$RH + O_2 \rightarrow R^{\bullet} + HO_2^{\bullet} \quad (2\text{-}10)$$

$$R^{\bullet} + O_2 \rightarrow ROO^{\bullet} \quad (2\text{-}11)$$

$$RH + HO_2^{\bullet} \rightarrow R^{\bullet} + H_2O_2 \quad (2\text{-}12)$$

$$RH + ROO^{\bullet} \rightarrow R^{\bullet} + ROOH \quad (2\text{-}13)$$

H_2O_2 and organic hydroperoxides formed in these reactions decompose to form •OH as shown in Equations 2-14 through 2-16.

$$H_2O_2 + (C) \rightarrow 2 \bullet OH + (C) \quad (2\text{-}14)$$

$$H_2O_2 + M^{n+} \rightarrow \bullet OH + OH^- + M^{(n+1)+} \quad (2\text{-}15)$$

$$ROOH + (C) \rightarrow RO^{\bullet} + \bullet OH + (C) \quad (2\text{-}16)$$

The collision partner (C) may be a homogenous (for example, H_2O) or heterogenous (for example, the surface of the reactor or the soil or sediment) material. The influence of the transition metal (M) in •OH formation is represented in Equation 2-15.

When H_2O_2 is the oxidant used in SCWO, •OH formation may also involve homogenous or heterogenous material as depicted in Equations 2-14 and 2-15. Additionally, the thermal decomposition of H_2O_2 that yields •OH may be significant under supercritical conditions.

As discussed in Section 2.1.1, alkalinity is an important operating parameter in oxidation processes involving •OH. Therefore, if alkalinity is high, influent pH adjustment may be required in SCWO applications to shift the carbonate-bicarbonate equilibrium from carbonate (a scavenger) to carbonic acid (not a scavenger). However, when the impact of •OH scavengers is estimated and the influent characteristics are adjusted to minimize the scavenger impact, the influence of supercritical conditions (high temperature and pressure) on all relevant chemical reactions should be considered.

Use of catalysts to improve the efficiency of the SCWO process has been studied by several researchers. According to Gloyna and Li (1998), use of catalysts has resulted in enhanced oxidation of complex organic compounds at relatively low SCWO temperatures (380 to 450 °C) and short reactor residence times (typically less than [<] 30 seconds). Frisch and others (1994) report higher removals for dimethyl methane phosphoric acid ester (DMMP), hydroxymethylprogesterone acetate, and methanol in the presence of a platinum catalyst. Catalysts are coated on support materials in SCWO applications because of the extreme conditions involved. Therefore, the stability and binding characteristics of the catalyst are important design considerations. Catalyst support materials studied by Frisch and others (1994) that are stable under supercritical water conditions include zirconia, titania, hafnia, and alpha-aluminum.

Commercial-scale SCWO systems currently available for treatment of contaminated water include the General Atomics and Chematur Engineering AB (Chematur) Aqua Critox® SCWO systems.

2.1.5 Cavitation Processes

Cavitation processes have been used for treatment of contaminated water. Cavitation refers to formation, growth, and implosive collapse of gas- or vapor-filled cavities (bubbles) in a liquid matrix. Collapse of the cavities produces localized high-temperature (about 5,000 °C) and high-pressure (about 50 MPa) hotspots (Suslick, 1990). The extreme conditions generated during cavitation result in •OH formation. Methods for inducing cavitation include ultrasonic irradiation (acoustic cavitation or sonolysis), high-voltage discharge (electrohydraulic cavitation), and pressure differential (hydrodynamic cavitation). These methods are discussed below.

2.1.5.1 Acoustic Cavitation

Ultrasound spans the frequencies from about 20 kilohertz (kHz) to 10 megahertz; human hearing has an upper limit of 18 kHz. Ultrasound travels through water as a cycle of expansion (negative pressure) and compression (positive pressure) waves induced in the molecules. When water containing small, solid particles with gas-filled crevices is exposed to a negative pressure cycle, the reduced pressure induces the gas to expand until a small, gas-filled cavity is formed and released into the surrounding water.

The cavities grow as they absorb energy from alternating compression and expansion waves. As energy is absorbed, the surface area of a cavity increases during expansion cycles and decreases during compression cycles. Because the amount of gas that diffuses into or out of the cavity depends on the surface area of the cavity, diffusion into the cavity during expansion cycles exceeds diffusion out of the cavity during compression cycles. Over successive

cycles, the cavity eventually reaches a critical size at which it can no longer absorb energy efficiently enough to sustain itself. At this point, the cavity cannot withstand the net external pressure of the surrounding water, and the cavity implodes in a very short time (about 10 microseconds).

When the cavity implodes, the gas inside the cavity is compressed, generating intense heat. This heat raises the temperature and pressure of the gas phase in the collapsing cavity and the water immediately surrounding it. After the violent collapse of the cavity, the surrounding water rushes into the cavity. Suslick (1989) reports that the gaseous contents of a collapsing cavity reached a temperature of about 5,500 °C and that the water immediately surrounding the cavity reached a temperature of 2,100 °C. Because the cavities are small (10 to 200 microns in diameter) and have short lifetimes (about 10 microseconds), the temperature and pressure conditions of the bulk water are relatively unaffected (Cropek and Kemme, 1996).

As a result of the localized temperature and pressure conditions produced during cavitation, chemical reactions are believed to occur in two distinct regions: (1) the gas phase in the center of a collapsing cavity and (2) a thin layer of supercritical water (see Section 2.1.4) surrounding the cavity (Hoffman and others, 1997). Three thermal destruction pathways are believed to occur in a system subjected to ultrasonic irradiation: oxidation by •OH formed by thermolysis of H_2O, SCWO, and pyrolysis (Cropek and Kemme, 1996). These pathways are described below.

The primary pathway for destruction of organic compounds by cavitation is believed to be oxidation by •OH. Generation of •OH by thermolysis of H_2O in the gas phase is described by Equation 2-17 (Hua and Hoffman, 1997).

$$H_2O \rightarrow H\bullet + \bullet OH \qquad (2\text{-}17)$$

Because •OH are highly reactive, these radicals do not have a long travel pathlength into bulk water. As a result, destruction of organic compounds by •OH mainly occurs in the cavity or near the cavity surface. However, Petrier and others (1992) suggest that at higher frequencies, •OH are ejected from the collapsing cavity before they can recombine in the gas phase because the collapse times at higher frequencies are shorter. Because •OH can escape into the bulk water and because contaminant oxidation could occur in the bulk water at a short distance from the cavity, alkalinity is an important acoustic cavitation parameter. If alkalinity is high, influent pH adjustment may be required to shift the carbonate-bicarbonate equilibrium from carbonate (a scavenger) to carbonic acid (not a scavenger).

As discussed in Section 2.1.4, supercritical water conditions increase the solubility of organic compounds, and if an oxidant is present in the supercritical water shell surrounding the cavity, SCWO of organics occurs. However, because the volume of the cavity is estimated to be about 20,000 times greater than the volume of the thin supercritical water shell, the value of SCWO in acoustic cavitation may be limited to increasing the solubility of the organic contaminant near the cavity surface for •OH attack (Cropek and Kemme, 1996).

Pyrolysis is defined as thermal destruction of organic compounds in the absence of O_2. According to Cropek and Kemme (1996), for pyrolysis to occur during acoustic cavitation, organic contaminants must be present in the gas phase inside the cavity. Organic contaminants with higher vapor pressures (such as VOCs relative to semivolatile organic compounds [SVOC]) will be present at higher concentrations inside the cavity. Therefore, pyrolysis is expected to be more prevalent as the vapor pressure of an organic compound increases. In addition, according to Hoffman and others (1997), pyrolysis is the predominant pathway of organic destruction in waste streams with high contaminant levels, whereas •OH is the predominant pathway in waste streams with low contaminant levels.

An alternative but less accepted explanation of acoustic cavitation is based on several electrical theories. According to these theories, charges could build up on opposite faces of a cavity as it is formed. The cavity undergoes pulsations and then fragmentation, during which intense electrical fields are generated. Electrified sprays of the surrounding liquid are injected into the cavity during its collapse (Lepoint and Mullie, 1994). Because of the intensity of the electrical phenomenon, partial ionization (•OH formation) of the cavity's contents is believed to occur. This partial ionization is similar to cold plasma chemistry in that aqueous electrons (e^-_{aq}), hydrogen radicals (H•), and •OH will likely be formed. However, Misik and Riesz (1997) recently demonstrated that e^-_{aq} are not formed during sonolysis of water.

The effect of adding saturating gases to the acoustic cavitation process has been studied by several researchers. Saturating gases are generally used to produce acoustic cavitation at lower acoustic power than would otherwise be necessary. Hua and Hoffman (1997) have studied the effects of four

different saturating gases: krypton, argon, helium, and O_2. Of the four gases, krypton is the least heat-conducting and most soluble; therefore, collapsing cavities containing krypton produce the most extreme transient temperatures, resulting in the highest production of H_2O_2 and •OH.

The combination of acoustic cavitation with ozonolysis, which is commonly referred to as the sonozone process, has been studied by many researchers (Olson and Barbier, 1994; Weavers and others, 1998). During acoustic cavitation, O_3 is thermolytically decomposed in the gas phase of a cavity to form two •OH. In addition, because sonication of ozonated water (relative to oxygenated water) produces H_2O_2, •OH also form near the surface of the cavity and in bulk water as a result of the reaction between O_3 and H_2O_2 (see Section 2.1.2).

Commercial-scale acoustic cavitation systems are not currently available. However, acoustic cavitation has been shown to be effective at the bench-scale level in treating contaminated water.

2.1.5.2 Electrohydraulic Cavitation

Electrohydraulic cavitation is produced by injecting energy into a liquid matrix through a plasma channel. A plasma is a highly ionized gas composed of a nearly equal number of positive and negative free charges (positive ions and electrons). The plasma channel is formed by sending short pulses (of about 20 microseconds) of a high-current, high-voltage electrical discharge between two electrodes submerged in water (Lang and others, 1998). As the plasma channel expands, it produces a high-pressure (>1,400 MPa) shockwave (Hoffman and others, 1997). If the shockwave is reflected back from a material in the reaction vessel with a different acoustic impedance, cavitation will occur. The pathways for destruction of organic compounds by acoustic cavitation discussed in Section 2.1.5.1 also apply to electrohydraulic cavitation.

Additional reaction mechanisms result from formation of the plasma channel. According to Robinson and others (1973), the plasma channel can reach temperatures exceeding 13,000 °C. As a result, organic compounds can be destroyed directly by pyrolysis within the plasma channel. However, because the plasma channel occupies only a small volume (about 1 to 3 milliliters [mL]), pyrolysis is not considered to be a primary reaction pathway (Lang and others, 1998). The extreme temperatures that exist in the plasma channel also cause the channel to function as a black body radiation source with maximum emittance in the vacuum UV region of the light spectrum (Robinson and others, 1973). As a result, soft x-rays and high-energy UV radiation emitted from the plasma channel into the bulk liquid serve as a source of •OH (Hoffman and others, 1997). Steam bubbles also form as thermal energy is transferred from the plasma channel to the bulk liquid (Buntzen, 1962). These bubbles, which exhibit the extreme temperature and pressure conditions observed in supercritical water (Ben'Kovskii and others, 1974), serve as an additional location for SCWO to occur.

Hoffman (1992) briefly describes two additional approaches to inducing electrohydraulic cavitation: (1) spark-gap discharge in water and (2) pulsed or continuous ultrasonic irradiation. In spark-gap discharge, energy stored in a condenser is released within several microseconds; this release of energy results in an arc across the electrode gap that vaporizes the water around the path of the arc, establishing a rapidly expanding plasma. Formation of plasma using ultrasonic irradiation is explained in Section 2.1.5.1.

Commercial-scale electrohydraulic cavitation systems are not currently available. However, the electrohydraulic cavitation process has been shown to be effective at the bench-scale level in treating contaminated water.

2.1.5.3 Hydrodynamic Cavitation

When water flows into a region where the pressure is at or below the vapor pressure of water (2.5 kiloPascals [kPa] at 20 °C), gas cavities form as the water starts to vaporize (Hicks and Edwards, 1971). When the cavities move into a region where the pressure exceeds the vapor pressure of water, the cavities collapse. The contaminant destruction pathways associated with hydrodynamic cavitation are expected to be similar to those described for acoustic cavitation in Section 2.1.5.1.

A commercial-scale hydrodynamic cavitation system called the Oxidation Systems, Inc. (OSI), HYDROX system is currently available for treatment of contaminated water.

2.1.6 Electrical Discharge-Based Nonthermal Plasma Processes

Electrical discharge-based nonthermal plasma processes have been used for treatment of contaminated air. A nonthermal plasma is a plasma in which the mean electron kinetic energy, or temperature, is significantly higher than that of the

molecules in the bulk gas, which are at ambient temperature. Traditionally, nonthermal plasmas are produced by a gas discharge under the application of a strong electric field. Under these conditions, both the electrons and ions are accelerated to high energies (several electron volts); however, because electrons have longer mean free pathlengths and lighter mass, they are typically accelerated to much higher energies than the ions (Vercammen and others, 1997).

The high-energy electrons in the nonthermal plasma react with wet air to form •OH by (1) electron attachment to H_2O, (2) direct dissociation of H_2O by electrons, (3) dissociation of H_2O by $O(^1D)$, and (4) dissociation of H_2O by excited oxygen atoms (Penetrante, 1993a). These reactions are described in Equations 2-18 through 2-25.

Electron attachment to H_2O:

$$e^- + H_2O \rightarrow H^- + \bullet OH \qquad (2\text{-}18)$$

Direct dissociation of H_2O by electrons:

$$e^- + H_2O \rightarrow e^- + \bullet H + \bullet OH \qquad (2\text{-}19)$$

Dissociation of H_2O by $O(^1D)$:

$$e^- + O_2 \rightarrow e^- + O(^3P) + O(^1D) \qquad (2\text{-}20)$$

$$O(^1D) + H_2O \rightarrow 2\bullet OH \qquad (2\text{-}21)$$

Dissociation of H_2O by excited oxygen atoms:

$$e^- + O_2 \rightarrow 2e^- + O_2^+ \qquad (2\text{-}22)$$

$$O_2^+ + H_2O \rightarrow O_2^+(H_2O) \qquad (2\text{-}23)$$

$$O_2^+(H_2O) + H_2O \rightarrow (H_3O)^+ + O_2 + \bullet OH \qquad (2\text{-}24)$$

$$O_2^+(H_2O) + H_2O \rightarrow H_3O^+(OH) + O_2 \qquad (2\text{-}25a)$$

or

$$H_3O^+(OH) + H_2O \rightarrow H_3O^+ + H_2O + \bullet OH \qquad (2\text{-}25b)$$

In dry-air applications, high-energy electrons in the nonthermal plasma react with O_2 to form oxygen radicals. These oxidizing radicals play an important role in generation of O_3 and the initial decomposition of some types of organics.

Nonthermal plasmas can be generated by E-beam irradiation or electrical discharge. The main difference between these two processes is where the high-energy electrons are generated. In the E-beam process, high-energy electrons are produced in an electron accelerator and then injected into a reaction chamber. A plasma is formed as the high-energy electrons collide with the molecules in the bulk gas. The E-beam process is discussed in more detail in Section 2.1.9. In the electrical discharge-based process, high-energy electrons are produced by an electric field generated between high-voltage electrodes within a reaction chamber. Specifically, free electrons gain kinetic energy as they drift along the high-voltage region between the electrodes, resulting in production of high-energy electrons. As in the E-beam process, a plasma forms as the high-energy electrons collide with the molecules in the bulk gas.

There are several types of electrical discharge-based reactors that are distinguished by their electrode configuration and electrical power supply. Types of electrical discharge-based reactors commonly used to treat contaminated air include pulsed corona, dielectric-barrier discharge, surface discharge, and ferroelectric packed bed reactors. These reactors are briefly described below. More information is provided by Vercammen and others (1997) and Penetrante (1993b).

In a pulsed corona reactor, at least one of the electrodes is a thin wire, is a needle, or has a sharp edge. The other electrode can be a plate or a cylinder. Short electrical pulses (of <1 microsecond) of high voltage are sent between two electrodes to produce electrical discharges (coronas) (Vercammen and others, 1997), which in turn produce short-lived plasmas.

In dielectric-barrier discharges reactors, also known as silent discharge reactors, one or both of the electrodes are covered with a thin, dielectric material. Dielectric materials are electrical insulators in which an electrical field can be sustained with minimum dissipation of power. Materials with high dielectric strength and a high dielectric constant, such as glass and aluminum, are used (Vercammen and others, 1997). A high-voltage alternating current is applied between electrodes to produce electrical discharges. When the electrical potential across the discharge gap reaches breakdown voltage, the dielectric material acts as a stabilizer, leading to formation of a large number of microdischarges of short pulses that are spread over the discharge gap. The discharge-generated ions traverse the gap in a pulse and are stored at the surface of the dielectric material. In the pulsed corona method, the transient behavior of the plasma is controlled by the applied voltage pulse, whereas the plasma in the dielectric-barrier discharge method self-extinguishes

when charge buildup on the dielectric material reduces the local electric field.

A surface discharge reactor contains strip-like electrodes on a ceramic, tubular or planar surface and a film-like counterelectrode embedded inside the ceramic. A high-frequency, high-voltage alternating current is applied to generate a surface discharge that appears at the sides of the strip-like electrode and uniformly covers the ceramic surface.

The ferroelectric packed bed reactor is a tubular reactor with high-dielectric ceramic pellets packed between two metal mesh electrodes. When high-voltage alternating current is applied, the pellets are polarized, and the high-strength electric fields that develop in the interstitial spaces between the pellets form many pulsed discharges. Dielectric materials commonly used for the pellets include barium-titanium trioxide, strontium-titanium trioxide, or lead-titanium trioxide (Penetrante, 1993b).

Commercial-scale electrical discharge-based nonthermal plasma systems are not currently available. However, the electrical discharge-based nonthermal plasma processes have been shown to be effective at the bench-scale level in treating contaminated air.

2.1.7 Gamma-Ray Process

The gamma-ray process has been used for treatment of contaminated water and soil. Gamma rays are high-energy photons (electromagnetic radiation) emitted by excited atomic nuclei in transition to a state of lower excitation. The most common source of gamma rays is radioactive decay of radioisotope cobalt 60 (^{60}Co), which emits gamma rays at energies of 1.17 and 1.33 million electron volts (MeV) as it decays to nickel 60 and has a half-life of 5.27 years. When gamma rays collide with irradiated water, high-energy (secondary) electrons are generated along the trajectory of the photons through three processes: photoelectric absorption, Compton scattering, and electron-positron pair production. Information on these processes is provided by Swallow (1973).

High-energy (secondary) electrons generated from gamma rays can initiate several thousand reactions as they dissipate energy in irradiated water. The reactions cause formation of three primary reactive species responsible for organic compound destruction (•OH, e^-_{aq}, and H•). The overall reaction for irradiation (gamma-ray, x-ray, and E-beam) processes is described by Equation 2-26 (Cooper and others, 1993).

$$\begin{aligned} H_2O + \text{high energy } e^- \rightarrow\ & e^-_{aq}(2.6) + \\ & \bullet H(0.55) + \bullet OH(2.7) + \\ & H_2(0.45) + H_2O_2(0.71) + \\ & H_3O^+(2.7) \end{aligned} \qquad (2\text{-}26)$$

The relative concentrations of the reaction products are presented as the "G values" shown in parentheses in Equation 2-26. The G values represent the numbers of free radicals, ions, or molecules formed in water absorbing 100 electron volts of energy. The G values in Equation 2-26 indicate the relative reaction product concentrations 10^{-7} second after high-energy electron impacts the water. Because strong oxidizing species (•OH) and strong reducing species (e^-_{aq} and •H) are formed in about equal concentrations, multiple mechanisms for organic compound destruction are provided by irradiation processes. In this way, irradiation processes differ from other processes that involve free radical chemistry and that typically rely on a single organic compound destruction mechanism, usually involving •OH.

Alkalinity is an important parameter in the gamma-ray process. If alkalinity is high, pH adjustment may be required for the irradiated water to shift the carbonate-bicarbonate equilibrium from carbonate (a scavenger) to carbonic acid (not a scavenger).

Gamma rays have a high penetration depth within irradiated water. According to Gray and Cleland (1998), studies indicate that a water depth of about 76 centimeters (cm) is required to absorb 90 percent of a gamma-ray energy level of 1.25 MeV. Therefore, the gamma-ray process can be used to treat flowing waste streams as well as containerized liquid wastes.

A variation of the gamma-ray process known as radiocatalysis has been studied by Su and others (1998). The study shows that the presence of titanium dioxide (TiO_2) catalyst and O_2 increases removal of EDTA. The increased removal of EDTA is facilitated by electron/hole pair formation in TiO_2 induced by gamma radiation, which is similar to an advanced photocatalytic oxidation process such as UV/TiO_2.

Commercial-scale gamma-ray systems are not currently available. However, the gamma-ray process has been shown to be effective at the bench-scale level in treating contaminated water and soil.

2.1.8 X-Ray Process

The x-ray process has been used for treatment of contaminated wastes. X-rays are high-energy photons (electromagnetic radiation) generated by accelerating high-energy (incident) electrons in the form of an E-beam against a material with a high atomic number. X-rays are emitted when the high-energy (incident) electrons are decelerated in the nucleus field of the target atom in the solid material (bremsstrahlung x-rays) and when electrons in the target atom fall from one atomic shell to another (characteristic x-rays) (Swallow, 1973).

The energy of x-rays emitted is a function of the energy of the high-energy (incident) electrons. According to Bailey and Lackner (1995), in the x-ray process, incident electron energy ranges from 8 to 10 MeV in order to avoid nuclear activation and to maximize the conversion to x-ray energy. However, the conversion is not efficient. Bailey and Lackner (1995) report conversion efficiencies of 1.6, 8.4, and 16.6 percent for 1-, 5-, and 10-MeV incident electrons, respectively.

As with gamma rays, when x-rays collide with irradiated water, high-energy (secondary) electrons are generated along the trajectory of the photons through three processes: photoelectric absorption, Compton scattering, and electron-positron pair production. Information on these processes is provided by Swallow (1973).

High-energy (secondary) electrons generated from x-rays can initiate several thousand reactions as they dissipate energy in the irradiated medium. The reactions cause formation of three primary reactive species responsible for organic compound destruction (•OH, e^-_{aq}, and H•). The overall reaction for irradiation (gamma-ray, x-ray, and E-beam) processes is described by Equation 2-26.

Alkalinity is an important parameter in the x-ray process. If alkalinity is high, pH adjustment may be required for irradiated matrices to shift the carbonate-bicarbonate equilibrium from carbonate (a scavenger) to carbonic acid (not a scavenger).

Like gamma rays, x-rays have a high penetration depth within irradiated water. According to Bailey and Lackner (1995), a 1-MeV x-ray has an effective water penetration depth of about 27 cm. Therefore, the x-ray process can also be used to treat flowing waste streams and containerized liquid wastes.

Commercial-scale x-ray systems are not currently available. However, the x-ray process has been shown to be effective at the bench-scale level in treating contaminated water.

2.1.9 E-Beam Process

The E-beam process involves irradiation of water or air with a beam of high-energy electrons produced by an electron accelerator. Within the electron accelerator, an electric current (beam current) is passed through a tungsten filament in a vacuum to produce a stream of electrons. This electron stream is accelerated by applying an electric field at a specified voltage and is focused into a beam by collimating devices. The applied voltage determines the energy (speed) of the accelerated electrons, which affects the depth to which the E-beam penetrates the medium being irradiated. The number of electrons emitted per unit time is proportional to the beam current; therefore, the E-beam power is the product of the beam current and accelerating voltage. The E-beam produced is injected into a reaction chamber through a thin foil titanium window that serves as the vacuum seal required for high-energy electron conversion.

Electron accelerators can provide electron energies in the range of 0.1 to 10 MeV. High-energy (about 2-MeV) E-beams are used for irradiation of water, whereas medium-energy (about 0.2-MeV) E-beams are adequate for irradiation of air (Schwinkendorf and others, 1995a). The depth to which an E-beam can penetrate irradiated water is significantly less than the depths associated with gamma rays and x-rays (see Sections 2.1.7 and 2.1.8, respectively). According to Bailey and Lackner (1995), a 1-MeV electron deposits its energy in water within a depth of 4 millimeters. As a result, E-beams are typically used to treat contaminated water of relatively shallow depths.

In the E-beam process, the mechanism of •OH formation is determined by the medium being irradiated. E-beam irradiation of water causes formation of three primary reactive species responsible for organic compound destruction (•OH, e^-_{aq}, and H•). The reaction for irradiation (gamma-ray, x-ray, and E-beam) processes is described by Equation 2-26.

Alkalinity is an important parameter in the E-beam process. If the alkalinity is high, influent pH adjustment may be required for irradiated water to shift the carbonate-bicarbonate equilibrium from carbonate (a scavenger) to carbonic acid (not a scavenger).

E-beam irradiation of air causes formation of a nonthermal plasma when high-energy electrons in the beam react with the bulk gas molecules. High-energy electrons generated in the plasma react with wet air to form •OH by (1) electron attachment to H_2O, (2) direct dissociation of H_2O by electrons, (3) dissociation of H_2O by $O(^1D)$, and (4) dissociation of H_2O by excited oxygen atoms (Penetrante, 1993a). These reactions are described for nonthermal plasma processes in Equations 2-18 through 2-25. In dry-air applications, high-energy electrons in the nonthermal plasma react with O_2 to form oxygen radicals. These oxidizing radicals play an important role in generation of O_3 and the initial decomposition of some types of organics.

A commercial-scale E-beam system called the High Voltage Environmental Applications, Inc. (HVEA), E-beam treatment system is currently available for treatment of contaminated water. In addition, the E-beam process has been shown to be effective at the pilot-scale level in treating contaminated air.

2.2 Commercial-Scale ANPO Systems

This section describes typical commercial-scale ANPO systems for treatment of contaminated water and soil. No commercial-scale ANPO systems are available for treatment of contaminated air. The information included in this section was obtained from ANPO process vendors and from published documents. The level of detail provided varies depending on the source of information used.

The commercial-scale ANPO systems described in this section include the (1) Geo-Cleanse® Fenton system, (2) ISOTEC™ Fenton system, (3) H&H SSCO™ Fenton system,(4) Chematur Aqua Critox® SCWO system, (5) General Atomics SCWO system, (6) OSI HYDROX hydraulic cavitation system, and (7) HVEA E-beam treatment system.

2.2.1 Geo-Cleanse® Fenton System

Geo-Cleanse in Kenilworth, New Jersey, U.S.A., developed and manufactures an in situ system for treatment of contaminated groundwater and soil and an ex situ system for treatment of contaminated soil. Both the in situ and ex situ treatment systems are based on the classic Fenton process. These systems are described below.

2.2.1.1 In Situ System

A typical Geo-Cleanse® in situ treatment system consists of a site-specific, horizontal and vertical array of injectors that encompass contamination in the subsurface and a mobile trailer containing the equipment necessary to inject Fenton's reagents into the subsurface. A simplified process flow diagram for one injector is shown in Figure 2-1. The system is pressurized and does not depend on diffusion of reagents into the subsurface. Instead, the system depends on a pressure gradient and subsurface permeability to distribute reagents. The pressure gradient is produced by chemical reactions that occur during the treatment process—specifically, degassing of carbon dioxide (CO_2) and O_2. Backpressure at the mobile trailer ranges from about 240 to 310 kPa for most system applications. The pressure required depends on the depth of the contamination, the permeability of the subsurface being treated, and contaminant concentrations.

An injector unit is composed of an injector mixing head fitted on top of an injector well. Each injector well is constructed of a 5-cm-diameter, 0.25-millimeter slot screen assembly attached to the bottom of a 3.2-cm-diameter, 0.6- to 2-meter (m)-long, stainless-steel casing. Above the casing, 3.2-cm-diameter, black iron riser pipe (not shown in Figure 2-1) can be attached if necessary. The injector mixing head, which is made of stainless steel, is attached to the top of the injector well at ground level. The mixing head, which is hollow-bodied, contains a mixing chamber and injection ports for supply lines carrying air, catalyst solution ($FeSO_4$), and 50 percent H_2O_2. The mixing head is designed to prevent the catalyst solution and H_2O_2 from mixing together in the injector until they reach the screened interval in the injector well; as a result, •OH formation occurs only in the subsurface.

The injector mixing head is connected by supply lines to Fenton's reagents housed in the mobile trailer. The trailer contains two 660-liter (L) storage tanks for catalyst solution, one 660-L storage tank for H_2O_2, one 10-horsepower air compressor, and a control panel. The control panel is used to regulate the flow of air and Fenton's reagents to the injectors. The air compressor maintains a positive pressure on the Fenton's reagents in the injector mixing head and supplies air to the air-driven feed pumps. The combined flow rate in the injector can range from 0.95 to 11 L per minute (L/min), depending on subsurface geological characteristics.

In a typical system application, air and catalyst solution are initially injected into the subsurface to verify that the injector is open to the subsurface. Added to the catalyst solution is a stabilizer (calcium phosphate) that delays formation of free radicals. H_2SO_4 (66 percent technical grade) and H_3PO_4 (85 percent technical grade) may also be injected

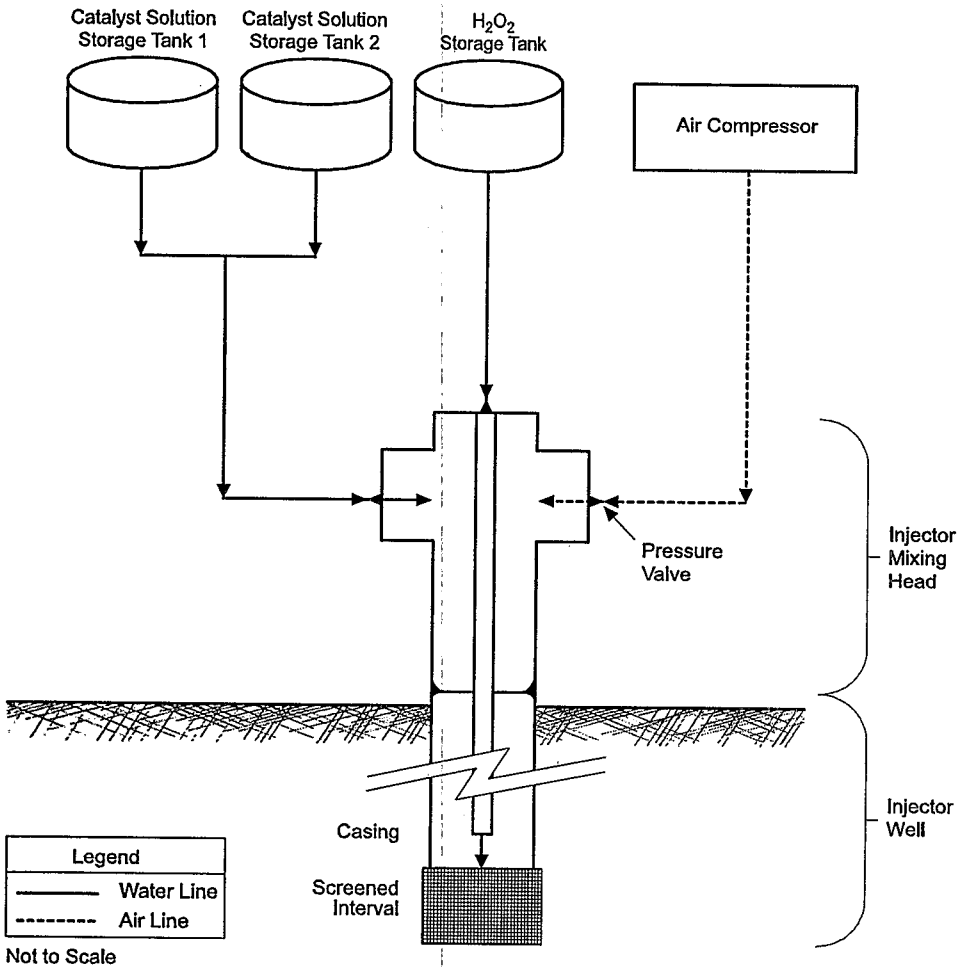

Figure 2-1. Flow configuration in an in situ Geo-Cleanse® Fenton system.

with the catalyst solution to adjust the groundwater pH to a range of 5.5 to 6.0, within which iron will be present in the Fe(II) state and will remain dissolved in solution. When acceptable flow and pH conditions are established, H_2O_2 and additional catalyst solution are simultaneously injected into the subsurface. The catalyst solution-acid-stabilizer mixture may be added throughout the injection process to maintain the groundwater pH within the range of 5.5 to 6.0.

2.2.1.2 Ex Situ System

The Geo-Cleanse® ex situ treatment system is a continuous-feed mixing unit that rests on a 9-m-long, self-powered trailer. The mixing unit consists of a soil hopper, catalyst hopper, conveyor belt, and screw-type mixing chamber. A simplified process flow diagram for the system is shown in Figure 2-2. The system is powered by two generators. In a typical system application, excavated soil with a particle diameter of <3.2 cm is placed in the soil hopper using a front-end loader. Soil is dispensed through the bottom of the soil hopper onto the left side of the conveyor belt, which proceeds to the catalyst hopper. Catalyst ($FeSO_4$) in powdered form is dispensed through the bottom of the catalyst hopper onto the right side of the conveyor belt adjacent to the soil. The conveyor belt carrying the soil and catalyst then proceeds to the rear of the trailer, where the mixing chamber is located. At the inlet of the mixing chamber, H_2O_2 is sprayed over the soil and catalyst. The H_2O_2 is supplied by a tank located on a separate trailer. Within the mixing chamber, the Fenton process occurs as the soil, catalyst, and H_2O_2 are mixed. Stabilizers, H_2SO_4, or H_3PO_4 may also be added for pH adjustment. The ex situ system is capable of processing about 19 or 46 cubic meters (m^3) of soil per hour.

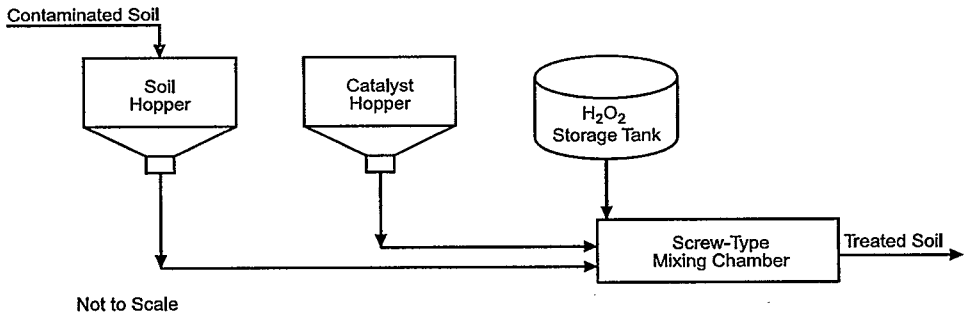

Figure 2-2. Flow configuration in an ex situ Geo-Cleanse® Fenton system.

2.2.2 ISOTEC™ Fenton System

The ISOTEC™ system was developed and is manufactured by ISOTEC in West Windsor, New Jersey, U.S.A. The system is an in situ soil and groundwater treatment system based on a modified Fenton process. In the ISOTEC™ process, the components of a proprietary catalyst chelate iron and keep it in dissolved form as an organometallic complex. The form of iron and the chelating components used are site-specific and are determined through bench- and pilot-scale evaluations. According to ISOTEC, its modification of the classic Fenton process allows the system to effectively treat organic contaminants in the subsurface within a soil pH range of 2.5 to 8.5. ISOTEC also uses proprietary stabilizer and mobility agents to control formation and dispersion of •OH.

A typical ISOTEC™ treatment system consists of a site-specific, horizontal and vertical array of injection wells that encompass a contaminant plume and the equipment necessary to inject modified Fenton's reagents into the subsurface. The system, whose flow configuration is shown in Figure 2-3, relies on hydrostatic pressure or a pressure gradient to distribute reagents throughout the subsurface. The pressure gradient is produced by capping each injection well and allowing the chemical reactions (degassing of CO_2 and O_2) that occur during the process to proceed. Pressure may also be externally applied to inject reagents into the subsurface. Backpressure at the delivery pump can range from 140 to 790 kPa during such applications. The pressure needed depends on the depth of contamination, the permeability of the subsurface being treated, and contaminant concentrations.

The injection wells are constructed of 5- to 10-cm-inside diameter, polyvinyl chloride material with a 2.5-cm slot screen. The proprietary catalyst, proprietary stabilizer, and oxidizer are kept in 570-L storage tanks.

Reagents are delivered from storage tanks to the injection wells by a delivery pump, an air compressor, and supply lines. The air compressor maintains a positive pressure on the reagents in the injection wells and supplies air to the air-driven delivery pump. Therefore, flow to the injection wells is regulated by air pressure generated at the pump. The combined flow rate in the injector can range from 0.4 L/min under gravity conditions to 19 L/min when applied pressure is used.

In a typical system application, catalyst is injected into the subsurface, the supply lines are washed with water, and then the oxidizer is applied. The oxidizer is prepared by diluting 35 percent H_2O_2 with water and ISOTEC's proprietary stabilizer. The treatment process is repeated as necessary until cleanup goals are met.

2.2.3 H&H SSCO™ Fenton System

The H&H SSCO™ system was developed and is manufactured by H&H in North Bonneville, Washington, U.S.A. This system is an ex situ soil treatment system based on a modified Fenton process. In the SSCO™ process, Fe(0) is applied in powder form to soil in order to carry out the Fenton reaction. According to the vendor, Fe(0) is a more economical form of iron than to Fe(II) or Fe(III).

The SSCO™ process is carried out using the Microenfractionator™, which is a 1,700-kilogram (kg) soil mixing machine that is driven through windrows (soil piles). This machine is self-propelled with four-wheel drive. In the center of the Microenfractionator™ is a counter-rotating drum unit (5.5-m-long, 0.71-m diameter) with 74 sets of fan-knife blades (0.25-m-long) attached to the outside of the drum. The blade sets are positioned

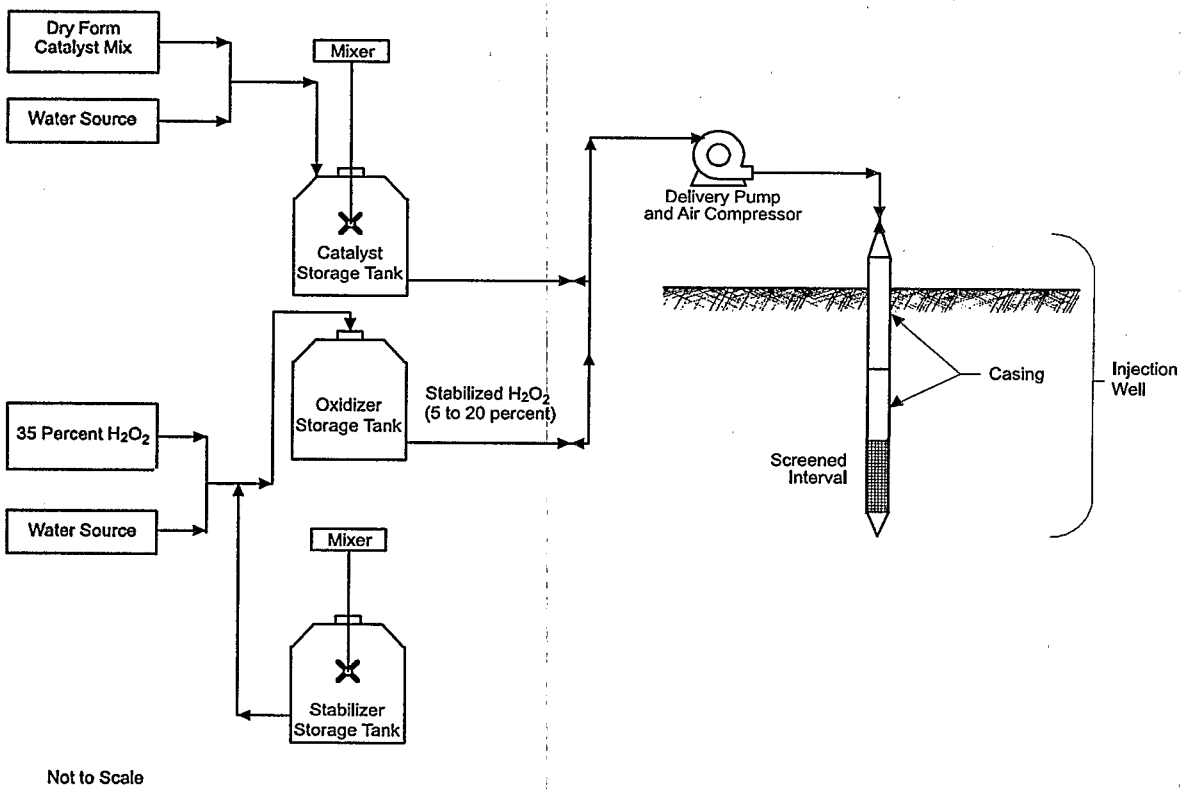

Figure 2-3 Flow configuration in an ISOTEC™ Fenton system.

on the drum at various angles relative to the drum unit. The drum and blades are made of a proprietary steel alloy and are powered by a diesel engine.

As the Microenfractionator™ is driven through windrows, the drum unit rotates at about 600 revolutions per minute. Soil particles contacted by the fan-knife blades become entrained in the air vortices produced by the rotation of the drum unit. The mixing action simultaneously homogenizes the soil and coats soil particles with oxidizer (50 percent H_2O_2) reagent, which is pumped directly into the microenfraction chamber through a spray nozzle. The Microenfractionator™, which can be equipped with a 1,900- to 19,000-L H_2O_2 storage tank, can supply H_2O_2 at a rate of up to 450 L/min. According to the vendor, the Microenfractionator™ can displace about 1,130 cubic meters per minute (m^3/min) of air during the process and can achieve up to 95 percent soil homogeneity. Furthermore, the Microenfractionator™ can process up to 1,100 cubic meters per hour (m^3/hr) of soil.

In a typical system application, excavated soil is placed in windrows that are 4.9 m wide and 2.0 m tall. The number of windrows and their length can vary based on the amount of soil that needs to be treated. At a minimum, two passes are made through each windrow with the Microenfractionator™. The first pass is used to apply the catalyst (Fe[0]). To apply the catalyst, 23- to 36-kg bags containing catalyst in dry powder form are placed on top of the windrows. The amount of catalyst added to the soil typically corresponds to 0.1 to 1 percent of the total weight of the soil to be treated. The Microenfractionator™ is then used to microenfractionate the catalyst into the soil. After a 24-hour stabilization period, the second pass is made, during which the oxidizer is microenfractionated into the soil. Additional oxidizer may be microenfractionated into the soil during subsequent passes to meet cleanup goals.

2.2.4 Chematur Aqua Critox® SCWO System

The Chematur Aqua Critox® system was developed by ECO Waste Technologies and is manufactured by Chematur in Karlskoga, Sweden. This treatment system is designed to remove organic contaminants from water using SCWO. A simplified process flow diagram for the system is shown in Figure 2-4. In this process, contaminated water is pressurized to about 25 MPa using a positive-displacement, high-pressure feed pump and then flows through a heat exchanger and into a trim heater. The temperature of the feed stream on the outlet side of the trim heater (360 to 377 °C) is near or above the supercritical temperature of water (374 °C). An oxidant (O_2) is added to the feed stream before it reaches the reactor. Within the reactor, SCWO occurs as temperatures reach 540 to 650 °C. The reactor effluent flows through a heat exchanger shell, a waste heat recovery boiler, and an effluent air cooler. A pressure letdown control valve lowers the effluent pressure to atmospheric pressure, and a liquid-gas separator separates the effluent into liquid and gas phases. The liquid effluent consists of water saturated with CO_2, and the gaseous effluent consists of CO_2 and O_2.

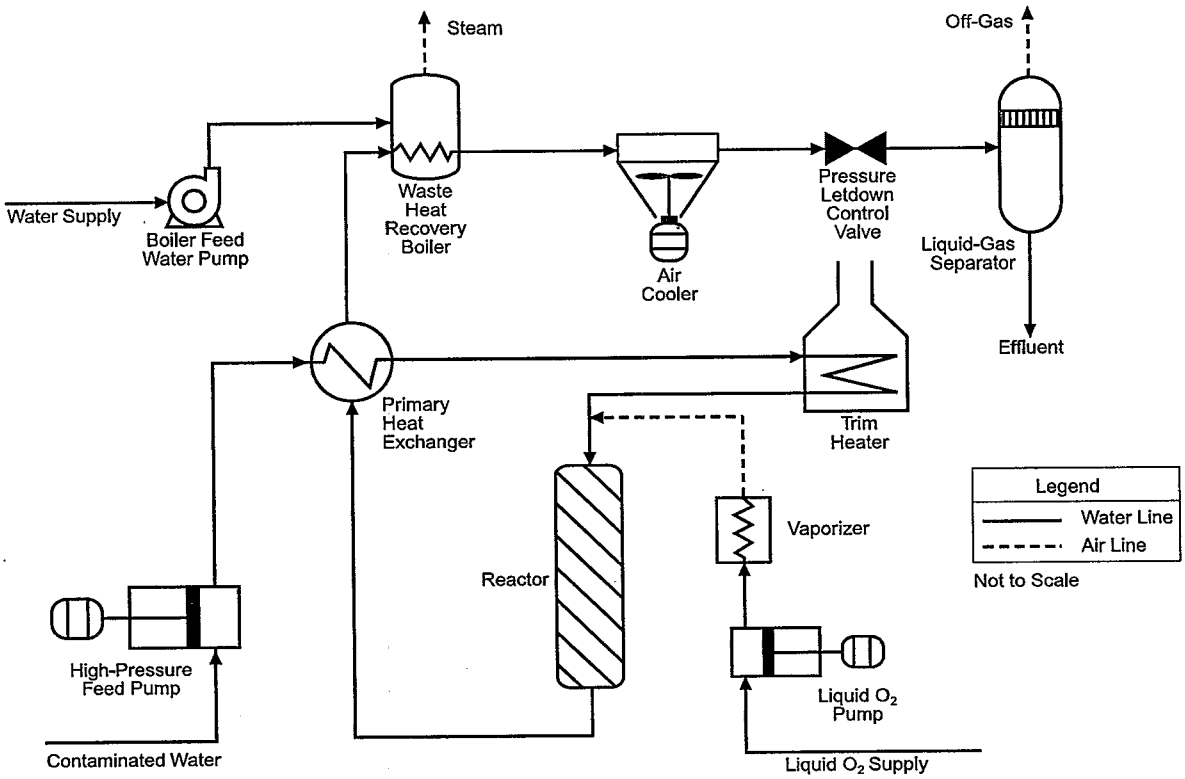

Figure 2-4. Flow configuration in a Chematur Aqua Critox® system.

2.2.5 General Atomics SCWO System

The General Atomics system was developed and is manufactured by General Atomics in San Diego, California, U.S.A. This system is designed to treat contaminated water using SCWO. A simplified process flow diagram for the system is shown in Figure 2-5. In this process, a transfer pump supplies contaminated water at low pressure (about 100 kPa) to a high-pressure feed pump. In addition, transfer pumps supply dilution water and auxiliary fuel at a pressure of about 380 kPa to their respective high-pressure feed pumps. An oxidant (O_2) is supplied to the system by a high-pressure (2.3 m^3/min at 34 MPa) air compressor. A liquid O_2 system can be used as an alternative source of O_2. Contaminated water and auxiliary fuel flow from the high-pressure feed pumps directly into the reactor. The dilution water and oxidant flow through a titanium-lined preheater before entering the reactor.

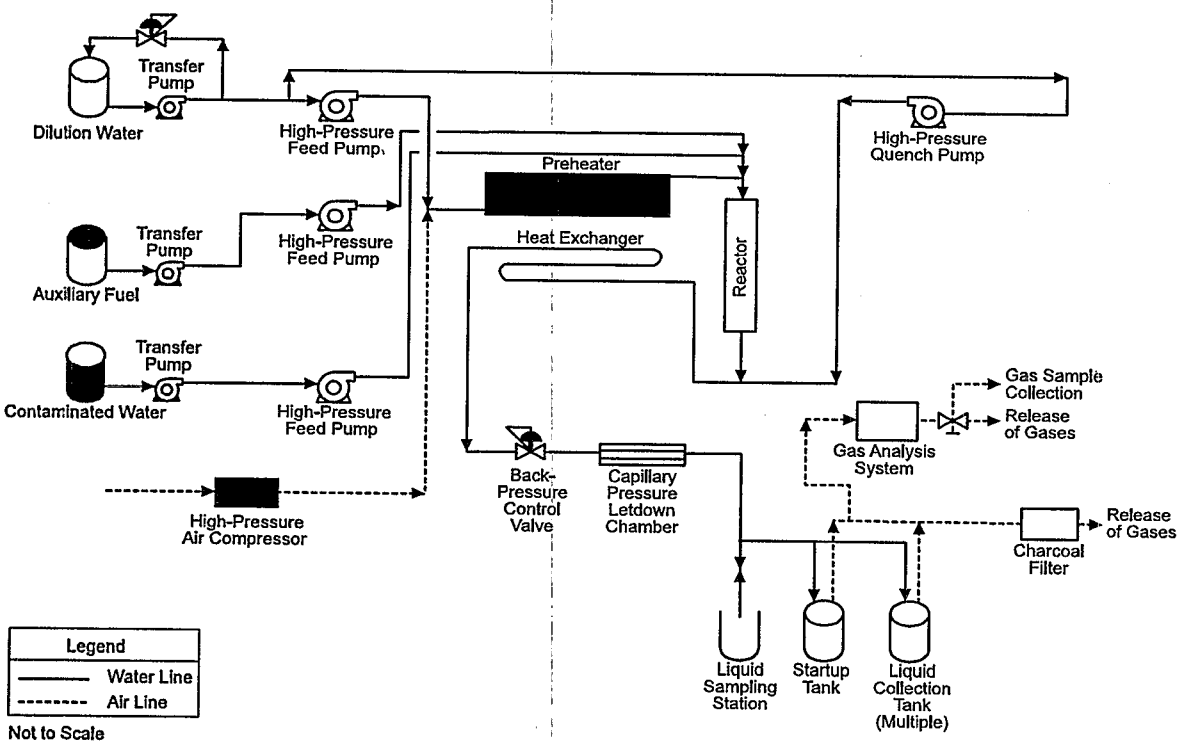

Figure 2-5. Flow configuration in a General Atomics SCWO system.

Within the reactor, SCWO occurs as the temperature and pressure climb as high as 650 °C and 30 MPa, respectively. Multiple reactor designs are available for the system, including a titanium-lined reactor and a reactor fitted with salt and solids transport equipment. Quench water is mixed with the reactor effluent. The effluent is then cooled in a titanium-lined heat exchanger and reduced in pressure by a pressure letdown system. The pressure letdown system includes capillaries and pressure control valves that can be used separately or in combination.

The process effluent consists of gaseous, liquid, and solid components that flow into liquid collection tanks. The gaseous effluent is vented from the tanks, and most of the gas passes through a charcoal filter before it is released. A portion of the gas undergoes continuous analysis for O_2 and carbon monoxide (CO) content in the gas analysis system. At predetermined intervals, a sample of the liquid effluent, including any entrained salts or other solids, is manually collected at the liquid sampling station.

2.2.6 OSI HYDROX Hydraulic Cavitation System

The OSI HYDROX system was developed and is manufactured by OSI in Arcadia, California, U.S.A. This system is designed to treat contaminated water using hydraulic cavitation. A typical OSI HYDROX system consists of a feed pump, a HYDROX reactor, interconnected piping and valves, and a sampling port as shown in Figure 2-6. The feed pump supplies contaminated water to the HYDROX reactor at about 340 to 590 kPa. In the reactor, a proprietary nozzle on the inlet side of the reactor lowers the pressure of the system to a level at or below the vapor pressure of water (2.5 kPa at 20 °C), causing cavities to form in the water. As the water flows through the reactor, the system pressure increases to atmospheric pressure (about 100 kPa), causing •OH formation. The water leaving the reactor can be discharged from the system or recycled to the suction side of the feed pump. Diverting all or part of the system flow into the recycling unit increases the retention time of the contaminated water in the HYDROX reactor. Skid-mounted HYDROX systems with treatment rates of up to 470 L/min are readily available. HYDROX systems with treatment rates of >950 L/min usually need to conform to site-specific design criteria and require on-site assembly.

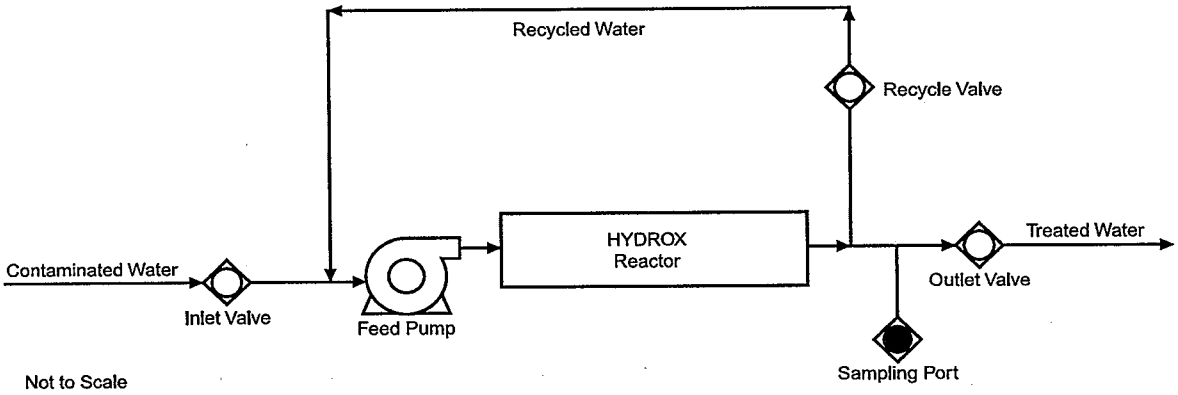

Figure 2-6. Flow configuration in an OSI HYDROX hydraulic cavitation system.

2.2.7 HVEA E-Beam Treatment System

The HVEA E-beam system was developed and is manufactured by HVEA in Miami, Florida, U.S.A. This system is designed to treat contaminated water using the E-beam process. A simplified process flow diagram for the system is shown in Figure 2-7. The system is housed in a mobile trailer and is rated for a maximum flow rate of 190 L/min. The E-beam system includes the following components: a strainer basket, an influent pump, the E-beam unit, a cooling air processor, a blower, and a control console (not shown in Figure 2-7). These components are situated in three separate rooms: the pump room, process room, and control room. The pump room contains all the ancillary equipment required by the E-beam unit for both water and air handling, the radiation-shielded process room contains the E-beam unit itself, and the control room contains the control console where system operating conditions are monitored and adjusted.

The E-beam unit is made up of the following components: an electron accelerator, a scanner, a contact chamber, and lead shielding. The electron accelerator produces the E-beam. Within the electron accelerator, a stream of electrons is emitted when an electric current (beam current) is passed through a tungsten wire filament. The electron stream is accelerated by applying an electric field at a specified voltage and is focused into a beam by collimating devices. The electron accelerator can generate an accelerating voltage of 500 kiloelectron volts (keV) and a beam current of between 0 and 42 milliamperes (mA).

A pyramid-shaped scanner located beneath the electron accelerator deflects the E-beam, causing it to scan the contaminated water (E-beam scanner operation is similar to that of the scanner in a television set). Contaminated water is pumped through the contact chamber, which is located beneath the scanner. The scanner is operated in such a way that the E-beam contacts the entire surface of the water flowing through the contact chamber.

A titanium window separates the scanner from the contact chamber. This window is necessary to maintain a vacuum in the scanner; the vacuum is required to minimize E-beam energy losses. As the E-beam passes through the titanium window, some of the E-beam's energy is absorbed by the window. This energy absorption is manifested in the form of heat. The titanium window is cooled by passing cooling air through the contact chamber. Cooling air exiting the contact chamber flows through a cooling air processor and is returned to the contact chamber by a blower.

The cooling air processor includes an air filter, a carbon adsorber, and an air chiller. The air filter is used to remove particulates from the cooling air. The carbon adsorber is used to destroy O_3 that is formed in the cooling air when it is exposed to the E-beam in the contact chamber. O_3 must be removed from the cooling air to prevent corrosion in the air lines and the blower. According to HVEA, any VOCs present in the cooling air as a result of incidental VOC volatilization in the contact chamber are destroyed by the E-beam. Vapor-phase VOCs that are not destroyed by the E-beam may be removed by the carbon adsorber. The air chiller is used to cool the air. According to HVEA, under normal operating conditions, cooling air is recirculated in a closed loop through the contact

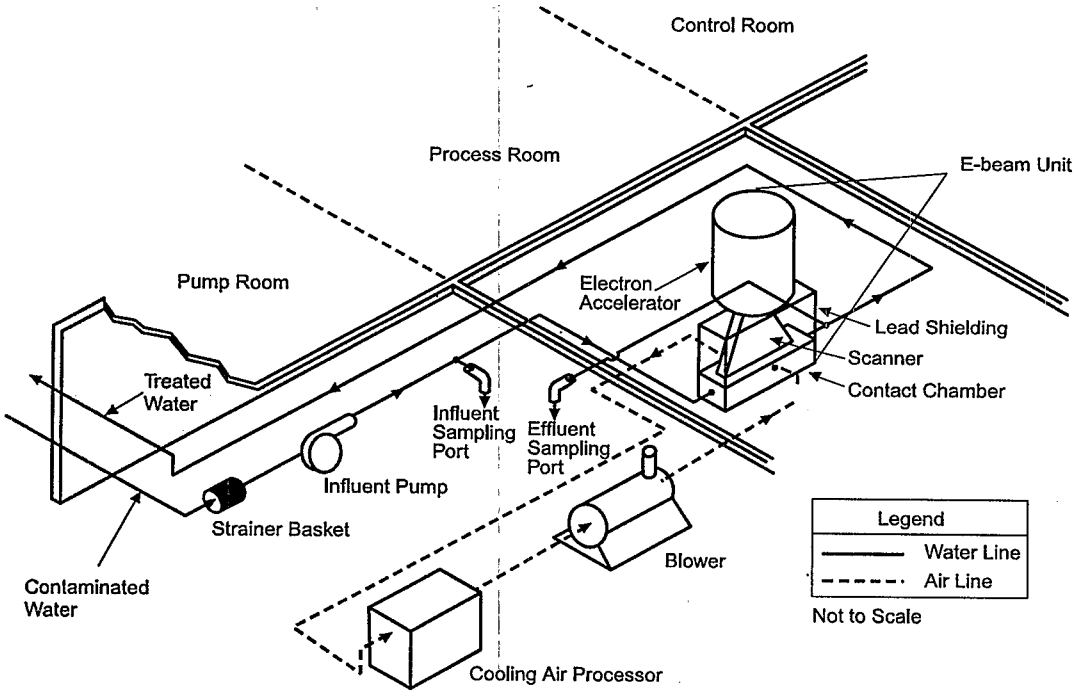

Figure 2-7. Flow configuration in an HVEA E-Beam system.

chamber and cooling air processor. When the E-beam system is operated, both the influent pump and the blower run continuously. If either water flow or cooling air flow stops, the system automatically shuts down.

Lead shielding surrounds the E-beam unit to prevent x-ray emissions. X-rays are formed when the E-beam contacts various internal, stainless-steel surfaces. As an added safety measure, the process room is inaccessible during system operation.

Resistance temperature devices (RTD) are used to measure the temperature of water before and after treatment. HVEA uses the change in water temperature to estimate the E-beam dose based on established equations defining the relationship between dose and temperature change (Nickelsen and others, 1992). The HVEA E-beam system is configured with two RTDs immediately upstream and two RTDs immediately downstream from the contact chamber. Output from the RTDs is fed into a computer in the control room for processing and recordkeeping.

The contaminated water flow rate is monitored at a point upstream from the contact chamber. The flow rate is manually adjusted in the pump room and is measured by a flow meter.

2.3 ANPO System Design Considerations

ANPO system design has not reached a stage where systems can be designed based on mechanistic models because of the complex nature of (1) the process chemistry involved, including the generation of primary reactive species and the destruction of contaminants; (2) matrix effects; and (3) waste streams with multiple contaminants. As a result, ANPO system design typically follows a scale-up approach.

Pedit and others (1997) propose that a model to facilitate the design of ANPO systems should (1) be based on process chemistry, (2) account for mass transfer of compounds between gas and liquid phases, (3) be applicable to a variety of system configurations, (4) predict transient behavior in response to changes in influent concentrations and other transient phenomena, (5) account for pH-controlled speciation, (6) be applicable to a variety of micropollutants and background water characteristics, and (7) be able to incorporate modifications in reaction mechanisms or reaction

rates. The model developed by Pedit and others is used to describe data from a full-scale O_3/H_2O_2 demonstration plant and is shown to provide a reasonably accurate representation of the data. However, because of the complexity and uncertainty associated with the input requirements for the model, the model has not yet been used to facilitate the design of ANPO systems.

Models have also been developed to assist in ANPO process optimization. Peyton (1996) describes a semi-empirical model with which the overall efficiency of an ANPO process can be evaluated as the product of efficiencies for the various steps that occur during radical generation, propagation, and attack on a contaminant. The model can thus be used to assist in ANPO process optimization by identifying steps for which the efficiency can be improved.

2.4 References

Bailey, V., and H. Lackner. 1995. "Emerging Technology Summary: X-Ray Treatment of Organically Contaminated Aqueous Solutions." Prepared for U.S. Environmental Protection Agency Office of Research and Development Superfund Innovative Technology Evaluation Program. May.

Ben'Kovskii, V.G., P. I. Golubnichii, and S. I. Maslennikov. 1974. Sov. Phys. Acoust. Volume 20. Page 14. Cited in Lang and others 1998.

Buntzen, R. R. 1962. "The Use of Exploding Wires in the Study of Small Scale Underwater Explosions." Cited in Lang and others 1998.

Buxton, G.V., C.L. Greenstock, W.P. Helman, and A.B. Ross. 1988. "Critical Review of Rate Constants for Reactions of Hydrated Electrons, Hydrogen Atoms and Hydroxyl Radicals ($\bullet OH/\bullet O^-$) in Aqueous Solution." *Journal of Physical and Chemical Reference Data*. Volume 17. Pages 513 to 886.

Chou, S.-S., Y.-H. Huang, S.-N. Lee, G.-H. Huang, and C.-P. Huang. 1999. "Treatment of High Strength Hexamine-Containing Wastewater by Electro-Fenton Method." *Water Research*. Volume 33, Number 3. February. Pages 751 through 759.

Comninellis, C., and C. Pulgarin. 1993. "Electrochemical Oxidation of Phenol for Wastewater Treatment Using SnO_2 Anodes." *Journal of Applied Electrochemistry*. Volume 23. Page 108. Cited in Polcaro and Palmas 1997.

Cooper, W.J., E. Cadavid, M.G. Nickelsen, K. Lin, C.N. Kurucz, and T.D. Waite. 1993. "Removing THMs from Drinking Water Using High-Energy Electron-Beam Irradiation." *Journal of the American Water Works Association*. September. Pages 106 through 112.

Cropek, D.M., and P.A. Kemme. 1996. "Sonolysis of Nitroaromatic Compounds." Technical Report Prepared for U.S. Army Corps of Engineers. December.

Duffy, J.E., M.A. Anderson, C.G. Hill, and W.A. Zeltner. 2000. "Wet Peroxide Oxidation of Sediments Contaminated with PCBs." *Environmental Science & Technology*. Volume 34, Number 15. Pages 3199 through 3204.

Falçon, M.K. Fajerwerg, J.N. Foussard, E. Puech-Costes, M.T. Maurette, and H. Debellefontaine. 1995. "Wet Oxidation of Carboxylic Acids with Hydrogen Peroxide. Wet Peroxide Oxidation (WPO®) Process. Optimal Ratios and Role of Fe:Cu:Mn Metals." *Environmental Technologies*. Volume 16. Pages 501 through 513.

Fenton, H.J.H. 1894. "Oxidation of Tartaric Acid in Presence of Iron." *Journal of the Chemical Society*. Volume 65. Page 899.

Frisch, M., L. Li, and E.F. Gloyna. 1994. "Catalyst Evaluation: Supercritical Water Oxidation Process." Presented at 49th Annual Purdue Industrial Waste Conference. West Lafayette, Indiana. May. Cited in Gloyna and Li 1998.

Glaze, W.H., J.-W. Kang, and D.H. Chapin. 1987. "The Chemistry of Water Treatment Processes Involving Ozone, Hydrogen Peroxide, and Ultraviolet Radiation." *Ozone Science and Engineering*. Volume 9. Pages 335 through 352.

Gloyna, E.F., and L. Li. 1995. "Progress in Supercritical Water Oxidation: Research and Development." *Chemical Oxidation: Technologies for the Nineties*. Volume 5. Edited by W.W. Eckenfelder, A.R. Bowers, and T.A. Roth. Technomic Publishing Co., Inc. Lancaster, Pennsylvania. Pages 1 through 12.

Gloyna, E.F., and L. Li. 1998. "Waste Treatment by Supercritical Water Oxidation." *Encyclopedia of Chemical Processing and Design. Waste, Nuclear, Reprocessing and Treatment Technologies to Wastewater Treatment, Multilateral Approach.* Volume 65. Edited by J.J. McKetta and G.E. Weismantel. Marcel Dekker, Inc. New York. Pages 272 through 304.

Gray, K.A., and M.R. Cleland. 1998. "Environmental Radiolysis for Soil and Sediment Treatment: A Review of Chemistry, Design, and Economic Issues." *Journal of Advanced Oxidation Technologies.* Volume 3, Number 1. Pages 22 through 36.

Hicks, T.G., and T.W. Edwards. 1971. *Pump Application Engineering.* McGraw-Hill Book Company. New York. Pages 86 through 88.

Hoffman, M.R. 1992. "Chemical Applications of Electrohydraulic Cavitation for Hazardous Waste Control." *Proceedings, 14th National Industry Energy Technology Conference, Focusing on Industry's Needs: Solving Today's Problems, Planning for Tomorrow, Profiting Through Technology.* Houston, Texas. April 1992. Pages 132 through 135.

Hoffman, M.R., I. Hua, R. Höchemer, D. Willberg, P. Lang, and A. Kratel. 1997. "Chemistry Under Extreme Conditions in Water Induced Electrohydraulic Cavitation and Pulsed-Plasma Discharges." Chapter 10 of *Chemistry Under Extreme or Non-Classical Conditions.* Edited by Rudi van Eldik and Colin D. Hubbard. John Wiley & Sons, Inc. New York. Pages 429 through 477.

Hua, I., and M.R. Hoffman. 1997. "Optimization of Ultrasonic Irradiation as an Advanced Oxidation Technology." *Environmental Science & Technology.* Volume 31, Number 8. Pages 2237 through 2243.

Huang, C.P., and C. Chu. 1991. "Electrochemical Oxidation of Phenolic Compounds from Dilute Aqueous Solutions." *Chemical Oxidation: Technology for the Nineties.* Volume 1. Edited by W.W. Eckenfelder, A.R. Bowers, and J.A. Roth. Technomic Publishing Co., Inc. Lancaster, Pennsylvania. Pages 239 through 253.

Koppang, M.D., M. Wirtek, J. Blau, and G.M. Swain. 1999. "Electrochemical Oxidation of Polyamines at Diamond Thin-Film Electrodes." *Analytical Chemistry.* Volume 71, Number 6. March 15. Pages 1188 through 1195.

Lang, P.S., W.K. Ching, D. M. Willberg, and M.R. Hoffman. 1998. "Oxidative Degradation of 2,4,6-Trinitrotoluene by Ozone in an Electrohydraulic Discharge Reactor." *Environmental Science & Technology.* Volume 32. Pages 3142 through 3148.

Lepoint, T., and F. Mullie. 1994. "Ultrasonics Chemistry S13." Cited in Hoffman and others 1997.

Lin, J.-G., A.C. Chao, and Y.-S. Ma. 1997. "Removal of 2-Chlorophenol from Wastewater with the Ultrasonic/Fenton Process." *Proceedings of the 52nd Purdue Industrial Waste Conference.* Ann Arbor Press. Chelsea, Michigan.

Lipczynska-Kochany, E., G. Sprah, and S. Harms. 1995. "Influence of Some Groundwater and Surface Waters [*sic*] Constituents on the Degradation of 4-Chlorophenol by the Fenton Reaction." *Chemosphere.* Volume 30, Number 1. Pages 9 through 20.

Martinez, A., C. Geiger, M. Hewett, C.A. Clausen, and C.D. Cooper. 1993. "Using Hydrogen Peroxide or Ozone to Enhance the Incineration of Volatile Organic Vapors." *Waste Management.* Volume 13, Number 3. Pages 261 through 270.

McKinzi, A.M., and T.J. Dichristina. 1999. "Microbially Driven Fenton Reaction for Transformation of Pentachlorophenol." *Environmental Science & Technology.* Volume 33, Number 11. Pages 1886 through 1891.

Misik, V., and P. Riesz. 1997. "Effect of Cd^{2+} on the OH Atom Yield in the Sonolysis of Water. Evidence Against the Formation of Hydrated Electrons." *Journal of Physical Chemistry.* Volume 101, Number 8. February 20. Pages 1441 through 1444.

Nickelsen, M.G., and others. 1992. "Removal of Benzene and Selected Alkyl-Substituted Benzenes from Aqueous Solution Utilizing Continuous High-Energy Electron Irradiation." *Environmental Science & Technology.* Volume 26. Pages 144 through 152.

Olson, T.M., and P.F. Barbier. 1994. "Oxidation Kinetics of Natural Organic Matter by Sonolysis and Ozone." *Water Research*. Volume 28, Number 6. June. Pages 1383 through 1391.

Pedit, J.A., K.J. Iwamasa, C.T. Miller, and W.H. Glaze. 1997. "Development and Application of a Gas-Liquid Contactor Model for Simulating Advanced Oxidation Processes." *Environmental Science & Technology*. Volume 31, Number 10. Pages 2791 through 2796.

Penetrante, B.M. 1993a. "Plasma Chemistry and Power Consumption in Nonthermal DeNOx." *Nonthermal Plasma Techniques for Pollution Control, Part A: Overview, Fundamentals, and Supporting Technologies*. NATO ASI Series, Series G: Ecological Sciences. Volume 32, Part B. Edited by B.M. Penetrante and S.E. Schwtheis. Springer-Verlag. Berlin, Germany. Pages 65 through 89.

Penetrante, B.M. 1993b. "Preface." *Nonthermal Plasma Techniques for Pollution Control, Part A: Overview, Fundamentals, and Supporting Technologies*. NATO ASI Series, Series G: Ecological Sciences. Volume 32, Part B. Edited by B.M. Penetrante and S.E. Schwtheis. Springer-Verlag. Berlin, Germany. Pages v through xx.

Petrier, C., A. Jeunet, J.L. Luche, and G. Reverdy. 1992. *Journal of the American Chemical Society*. Volume 114. Pages 3148 through 3150. Cited in Hua and Hoffman 1997.

Peyton, G.R. 1996. "Kinetic Modeling of Free-Radical Water Treatment Process. Pitfalls, Practicality, and the Extension of the Hoigne/Bader/Staehelin Model." *Journal of Advanced Oxidation Technologies*. Volume 1, Number 2. Pages 115 through 125.

Peyton, G.R., O.J. Bell, E. Girin, M.H. LeFaivre, and J. Sanders. 1998. "Effect of Bicarbonate Alkalinity on Performance of Advanced Oxidation Processes." American Water Works Association Research Foundation. Denver, Colorado.

Pignatello, J.J. 1992. "Dark and Photoassisted Fe^{3+}-Catalyzed Degradation of Chlorophenoxy Herbicides by Hydrogen Peroxide." *Environmental Science & Technology*. Volume 26. Pages 944 through 951.

Polcaro, A.M., and S. Palmas. 1997. "Electrochemical Oxidation of Chlorophenols." *Industrial & Engineering Chemistry Research*. Volume 36, Number 5. May. Pages 1791 through 1798.

Polcaro, A.M., S. Palmas, and S. Dernini. In press. "Organic Waste Destruction by Electrochemical Oxidation." *Water Resources*. Cited in Polcaro and Palmas 1997.

Robinson, J.W., M. Hamm, and A. N. Balaster. 1973. *Journal of Applied Physics*. Volume 44. Page 72. Cited in Lang and others 1998.

Rodgers, J.D., W. Jedraol, and N.J. Bunce. 1999. "Electrochemical Oxidation of Chlorinated Phenols." *Environmental Science & Technology*. Volume 33, Number 9. Pages 1453 through 1457.

Schwinkendorf, W.E., T. McFee, M. Devarokonda, L.L. Nenninger, F.S. Fadullon, T.L. Donaldson, and K. Dickerson. 1995a. "Gas-Phase Electron Beam Oxidation." Alternatives to Incineration Technical Area Status Report, Section 6.2. Prepared for U.S. Department of Energy, Office of Technology Development. April.

Schwinkendorf, W.E., T. McFee, M. Devarokonda, L.L. Nenninger, F.S. Fadullon, T.L. Donaldson, and K. Dickerson. 1995b. "Supercritical Water Oxidation." Alternatives to Incineration Technical Area Status Report, Section 7.4. Prepared for U.S. Department of Energy, Office of Technology Development. April.

Su, Y., Y. Wang, J.L. Daschbach, T.B. Flyberger, M.A. Henderson, J. Janata, and C.H.F. Peden. 1998. "Gamma-Ray Destruction of EDTA Catalyzed by Titania." *Journal of Advanced Oxidation Technologies*. Volume 3, Number 1. Pages 63 through 69.

Suslick, K.S. 1989. "The Chemical Effects of Ultrasound." *Scientific American*. Volume 260. Pages 80 through 86.

Suslick, K.S. 1990. "Sonochemistry." *Science*. Volume 247. March. Page 1439.

Swallow, A.J. 1973. *Radiation Chemistry: an Introduction*. John Wiley & Sons. New York.

Tachiev, G., A.R. Bowers, and J.A. Roth. 1998. "Hydrogen Peroxide Oxidation of Phenols Catalyzed by Iron Ions." *Chemical Oxidation:*

Technologies for the Nineties. Volume 8. Edited by W.W. Eckenfelder, A.R. Bowers, and J.A. Roth. Technomic Publishing Co., Inc. Lancaster, Pennsylvania.

Urs, J., and J. Hoigne. 1998. "Activated Carbon and Carbon Black Catalyzed Transformation of Aqueous Ozone into OH-Radicals." *Ozone Science and Engineering*. Volume 20, Number 1. Pages 67 through 90.

Vercammen, K.L.L., A. Berezin, F. Lox, and J. Change. 1997. "Nonthermal Plasma Techniques for the Reduction of Volatile Organic Compounds in Air Streams: A Critical Review." *Journal of Advanced Oxidation Technology*. Volume 2, Number 2. Pages 312 through 329.

Walling, C. 1975. "Fenton's Reagent Revisited." *Accounts of Chemical Research*. Volume 8. Pages 125 through 131.

Weavers, L.K., and F.H. Ling, and M.R. Hoffman. 1998. "Aromatic Compound Degradation in Water Using a Combination of Sonolysis and Ozonolysis." *Environmental Science & Technology*. Volume 32, Number 18. Pages 2727 through 2733.

Weiss, J. 1935. "The Radical HO_2 in Solution." *Trans. Faraday Soc*. Volume 31. Page 668. Cited in Glaze and others, 1987.

Wink, D.A., C.B. Wink, R.W. Nims, and P.C. Ford. 1994. "Oxidizing Intermediates Generated in the Fenton Reagent: Kinetic Arguments Against the Intermediacy of the Hydroxyl Radical." *Environmental Health Perspectives*. Volume 102. Pages 11 through 15.

Section 3
Contaminated Water Treatment

ANPO processes have been demonstrated to be effective for treatment of contaminated water. Water matrices to which ANPO has been applied include (1) contaminated groundwater, (2) industrial wastewater, (3) municipal wastewater, (4) contaminated drinking water, (5) landfill leachate, and (6) contaminated surface water. Collectively, ANPO has been applied to the following types of waterborne contaminants: VOCs, SVOCs, polychlorinated biphenyls (PCB), pesticides and herbicides, dioxins and furans, explosives and their degradation products, humic substances, dyes, inorganics, and microbes.

To assist an environmental practitioner in the selection of an ANPO system to treat contaminated water, this section includes (1) commercial-scale system evaluation results for Fenton, SCWO, hydrodynamic cavitation, and E-beam processes and (2) pilot-scale system evaluation results for Fenton, O_3/H_2O_2, electrochemical oxidation, SCWO, and E-beam processes. This section also summarizes supplemental information available from bench-scale studies of ANPO processes.

As described in Section 1.2, this handbook organizes performance and cost data for each water matrix first by contaminant group, then by scale of evaluation (commercial, pilot, or bench), and finally by ANPO system or process. In general, commercial- and pilot-scale applications are discussed in detail. Such discussions include, as available, a system description, operating conditions, performance data, and system costs presented in 2000 U.S. dollars. Bench-scale studies of ANPO processes are described in less detail and only if they provide information that supplements commercial- and pilot-scale evaluation results. The level of detail provided for bench-scale studies varies depending on the source of information used. For example, percent removals and test conditions are not specified for some bench-scale studies because such information is unavailable in the sources.

At the end of each matrix section, a table is provided that summarizes operating conditions and performance results for each commercial- and pilot-scale application discussed in the text. The references cited in Section 3 are listed in Section 3.7.

3.1 Contaminated Groundwater Treatment

The effectiveness of ANPO processes in treating contaminated groundwater has been evaluated for various contaminant groups, including VOCs, SVOCs, PCBs, pesticides and herbicides, dioxins and furans, explosives and their degradation products, humic substances, and inorganics. This section describes ANPO process effectiveness with regard to each of these contaminant groups. The operating conditions and performance results for each commercial- and pilot-scale application discussed in Section 3.1 are summarized in Table 3-1 at the end of the section.

3.1.1 VOC-Contaminated Groundwater

This section discusses treatment of VOCs in groundwater using the Fenton, hydrodynamic cavitation, and E-beam processes on a commercial scale. Additional information on VOC removal using the (1) O_3/H_2O_2 process at the pilot scale and (2) Fenton, O_3/H_2O_2, and acoustic cavitation processes at the bench scale is also included.

Commercial-Scale Applications

This section summarizes the effectiveness of the Geo-Cleanse® Fenton, ISOTEC™ Fenton, OSI HYDROX hydrodynamic cavitation, and HVEA E-beam treatment systems in removing the following VOCs from contaminated groundwater.

ANPO Process	VOCs Removed
• Fenton	• 1,2-Dichloroethene (DCE); methyl-tert-butylether (MTBE); 2-methyl-naphthalene; naphthalene; tetrachloroethene (PCE); 1,1,1-trichloroethane (TCA); trichloroethene (TCE); vinyl chloride (VC); benzene, toluene, ethyl-benzene, and xylene (BTEX)
• Hydro-dynamic cavitation	• 2-Methylnaphthalene; naphthalene

ANPO Process	VOCs Removed
• E-beam	• Carbon tetrachloride; chloroform; 1,2-DCE, 1,2-dichloroethane (DCA); MTBE; PCE; 1,1,1-TCA; TCE; BTEX

Geo-Cleanse® Fenton System

A Geo-Cleanse® in situ Fenton system was used to remove 1,2-DCE; PCE; and TCE from groundwater under former waste lagoons at Letterkenny Army Depot in Chambersburg, Pennsylvania, U.S.A. Groundwater in the limestone bedrock aquifer at this site contained 860 micrograms per liter (µg/L) of 1,2-DCE; 220 µg/L of PCE; and 2,100 µg/L of TCE. The Geo-Cleanse® Fenton system treated about 10,000 m^3 of groundwater. About 48,000 L of 50 percent H_2O_2; 190 L of 66 percent H_2SO_4; 38 L of 85 percent H_3PO_4; and 17 kg of $FeSO_4$ were injected at six locations in the treatment zone over 8 consecutive days. As part of the treatment, Geo-Cleanse also used calcium phosphate as a stabilizer for the reaction; however, the amount of stabilizer used is unknown. After a treatment time of 60 days, 1,2-DCE; PCE; and TCE concentrations had been reduced by about 40 percent each. In addition, no tentatively identified compounds (TIC) were detected when groundwater samples were analyzed using U.S. EPA's "Test Methods for Evaluating Solid Waste" (SW-846) Method 8260 (U.S. EPA, 1996). According to Geo-Cleanse, the total treatment cost was about $170,000, which includes equipment rental, reagent, mobilization, and labor costs (Geo-Cleanse, 2000).

In another in situ application at Letterkenny Army Depot, a Geo-Cleanse® Fenton system was used to remediate contaminated groundwater in a shale bedrock aquifer beneath an oil burn pit and fire training area. The primary contaminant of concern at the site was 1,1,1-TCA, which was present at a maximum concentration of 280 milligrams per liter (mg/L). The Geo-Cleanse® system treated about 640 m^3 of groundwater in a 15- by 15- by 9-m area. About 7,600 L of 50 percent H_2O_2; 110 L of 66 percent H_2SO_4; 38 L of 85 percent H_3PO_4; and 18 kg of $FeSO_4$ were injected at four locations in the treatment zone for 7 days over 4 weeks. The amount of calcium phosphate stabilizer used is unknown. Four months after the last injection, the TCA concentration had been reduced by 84 percent at the maximum concentration location. No TICs were detected when groundwater samples were analyzed using SW-846 Method 8260. The vendor-estimated treatment cost was about $230,000, which includes equipment rental, reagent, mobilization, and labor costs (Geo-Cleanse, 2000).

In 1998, a Geo-Cleanse® in situ Fenton system was used at Pensacola Naval Air Station in Florida, U.S.A., to treat TCE-contaminated groundwater under a sludge drying bed at a wastewater treatment plant. The initial TCE concentration averaged 1,500 µg/L. The system treated about 62 m^3 of groundwater. About 38,000 L of 50 percent H_2O_2; 170 L of 66 percent H_2SO_4; 57 L of 85 percent H_3PO_4; and 4.5 kg of $FeSO_4$ were injected at eight locations in the treatment zone for a total of 10 days over 1.5 months. The amount of calcium phosphate stabilizer used is unknown. After a treatment time of 60 days, the system removed 98 percent of the TCE in the groundwater. No TICs were detected when groundwater samples were analyzed using SW-846 Method 8260. According to Geo-Cleanse, the total treatment cost was about $160,000, including equipment rental, reagent, mobilization, and labor costs (Geo-Cleanse, 2000).

A Geo-Cleanse® in situ Fenton system was used to treat groundwater contaminated with PCE and its natural degradation products (1,2-DCE; TCE; and VC) at Kings Bay Naval Submarine Base in Georgia, U.S.A. The contaminants, which originated from the former Camden County landfill, were present in the groundwater at an average total of 5,000 µg/L. The system treated about 380 m^3 of groundwater. About 46,000 L of 50 percent H_2O_2; 450 L of 66 percent H_2SO_4; 110 L of 85 percent H_3PO_4; and 54 kg of $FeSO_4$ were injected at 23 locations in the treatment zone for 18 consecutive days. The amount of calcium phosphate stabilizer used is unknown. After a treatment time of 60 days, the system achieved an average of 89 percent removal of the contaminants in the groundwater. No TICs were detected when groundwater samples were analyzed using SW-846 Method 8260. The vendor estimates the total treatment cost to be $210,000, which includes equipment rental, reagent, mobilization, and labor costs (Geo-Cleanse, 2000).

At Wright Army Airfield in Fort Stewart, Georgia, U.S.A., a Geo-Cleanse® in situ Fenton system was used to remediate contaminated groundwater in a sand aquifer beneath a helicopter refueling area. The primary contaminants of concern at the site were petroleum hydrocarbons, specifically 2-methylnaphthalene (640 µg/L), naphthalene (640 µg/L), benzene (600 µg/L), toluene (23 µg/L), ethylbenzene (670 µg/L), and xylene (1,500 µg/L). The system treated about 350 m^3 of groundwater. About 9,500 L of 50 percent H_2O_2; 83 L of 66 percent

H_2SO_4; 8 L of 85 percent H_3PO_4; and 54 kg of $FeSO_4$ were injected at two locations in the treatment zone over 4 consecutive days. The amount of calcium phosphate stabilizer used is unknown. After a treatment time of 6 days, the system achieved the following removal efficiencies: 2-methylnaphthalene, 88 percent; naphthalene, 86 percent; benzene, 96 percent; toluene, 18 percent; ethylbenzene, 78 percent; and xylene, 62 percent. The in situ system not only achieved significant source reduction but also allowed the airfield to remain active during remediation because no excavation was necessary. No TICs were detected when groundwater samples were analyzed using SW-846 Method 8260. The vendor-estimated treatment cost was $75,000, which includes equipment rental, reagent, mobilization, and labor costs (Geo-Cleanse, 2000).

Groundwater beneath a dry-cleaning facility in Houston, Texas, U.S.A. was treated in situ using a Geo-Cleanse® Fenton system. The chemicals 1,2-DCE, PCE, TCE, and VC were present in the groundwater at average concentrations of 930; 1,200; 600; and 17 µg/L, respectively. The system treated about 4,100 m^3 of groundwater. About 32,000 L of 50 percent H_2O_2; 190 L of 66 percent H_2SO_4; 40 L of 85 percent H_3PO_4; and 45 kg of $FeSO_4$ were injected at 40 locations in the treatment zone over 9 consecutive days. The amount of calcium phosphate stabilizer used is unknown. As a result of the treatment, the concentrations of all four contaminants fell below detection limits in all the monitoring wells sampled 30 days after the last injection. No TICs were detected when groundwater samples were analyzed using SW-846 Method 8260. The vendor-estimated treatment cost was $320,000, including equipment rental, reagent, mobilization, and labor costs (Geo-Cleanse, 2000).

ISOTEC™ Fenton System

An ISOTEC™ in situ Fenton system was used to treat MTBE- and BTEX-contaminated groundwater in a silty sand aquifer beneath a warehouse facility in northern New Jersey, U.S.A. Groundwater at the site contained >54 mg/L of MTBE and BTEX total. The groundwater pH before treatment was nearly neutral. About 13,000 L of Fenton's reagent was used to treat a plume spread over an area 38 m long, 15 m wide, and 4 m deep. The treatment zone was 3 to 7 m below ground surface (bgs). Reagent injections were performed at six locations throughout the plume for a total of 16 days over a 7-month period. The system achieved >99 percent MTBE and BTEX removal. All the treatment goals—70 µg/L for MTBE; 1 µg/L for benzene; 1,000 µg/L for toluene; 700 µg/L for ethylbenzene; and 40 µg/L for total xylene—were met, and the site was issued a no further action letter by the New Jersey Department of Environmental Protection 4 months after the final round of injection activities. According to ISOTEC, the total treatment cost was about $110,000; no breakdown of the cost was provided by the vendor (ISOTEC 2000).

Groundwater in a fine-grained, sandy silt aquifer contaminated with 1,2-DCE; PCE; and TCE at a manufacturing facility in northern New Jersey, U.S.A., was treated using an ISOTEC™ in situ Fenton system. The chlorinated VOCs were present in the groundwater at a total of >150 mg/L. The groundwater pH before treatment was nearly neutral. About 58,000 L of Fenton's reagent was used to treat a plume spread over an area 53 m long, 14 m wide, and 11 m deep. Reagent injections were performed at four shallow locations (3 m bgs) and 13 deep locations (12 m bgs) for 32 days over a 6-month period. The system achieved >99 percent removal for each contaminant. Most of the groundwater plume met the cleanup criteria of 70 µg/L for 1,2-DCE; 1 µg/L for PCE; and 1 µg/L for TCE. According to ISOTEC, system operating costs totaled $180,000; no breakdown of the cost was provided by the vendor (ISOTEC, 2000).

OSI HYDROX Hydrodynamic Cavitation System

Groundwater containing furans, polynuclear aromatic hydrocarbons (PAH), and VOCs was treated in a 7,600-L/min OSI HYDROX hydrodynamic cavitation system. Concentrated creosote chemicals were collected from the bottom of wells in Visalia, California, U.S.A., and were mixed with well water for treatment. The addition of the chemicals rendered the well water opaque. The chemicals 2-methylnaphthalene and naphthalene were present at initial concentrations of 260 and 340 mg/L, respectively. About 41 kilowatts (kW) of power was consumed in treating the groundwater for 9 hours. Treatment continued until the water became clear and contaminant concentrations reached acceptable discharge levels. Hydrodynamic cavitation reduced the concentrations of 2-methylnaphthalene and naphthalene by 78 and 75 percent, respectively. According to OSI, the total treatment cost was about $200,000, which includes the capital cost and an operation and maintenance (O&M) cost of $0.65/$m^3$ of groundwater treated. The estimated cost savings associated with treating the contaminated groundwater using ANPO rather than disposing of it by conventional methods were >$500,000 (OSI, 2000).

HVEA E-Beam System

A Model M25W-48S HVEA E-beam system was demonstrated in September and November 1994 under the U.S. EPA Superfund Innovative Technology Evaluation Program. This demonstration involved removing VOCs from groundwater in the M-area at the U.S. Department of Energy Savannah River Site in Aiken, South Carolina, U.S.A. (Alvarez and others, 1998).

PCE and TCE were the primary groundwater contaminants at the site, with concentrations ranging from 9,200 to 12,000 µg/L and 25,000 to 30,000 µg/L, respectively. In addition, 1,2-DCE was present in groundwater at low concentrations ranging from 40 to 43 µg/L. Thirteen test runs of the system were conducted in five phases: four test runs used raw groundwater, and the remaining nine test runs used groundwater spiked with carbon tetrachloride (150 to 400 µg/L); chloroform (240 to 650 µg/L); 1,2-DCA (210 to 840 µg/L); 1,1,1-TCA (200 to 500 µg/L); benzene (220 to 550 µg/L); toluene (170 to 360 µg/L); ethylbenzene (95 to 250 µg/L); and xylene (85 to 200 µg/L). Unspiked Run 3 and spiked Run 13 had flow rates of 150 and 76 L/min, respectively. During both runs, groundwater was irradiated with a beam current of 42 mA. In Run 13, in which the effect of alkalinity on VOC removal was tested, the influent pH and alkalinity were 7.6 and 500 mg/L as calcium carbonate ($CaCO_3$), respectively.

The system treated about 260 m^3 of VOC-contaminated groundwater at the U.S. Department of Energy Savannah River Site. For the unspiked groundwater (Run 3) in which the alkalinity was <5 mg/L as $CaCO_3$, removal efficiencies for 1,2-DCE; PCE; and TCE were >90, 96, and 97 percent, respectively. For the spiked groundwater (Run 13) in which the alkalinity was increased to 500 mg/L as $CaCO_3$, removal efficiencies for 1,2-DCE; PCE; and TCE were >91, 99, and 99 percent, respectively. In addition, carbon tetrachloride and BTEX were removed with efficiencies of >98 percent during Run 13. Chloroform; 1,2-DCA; and 1,1,1-TCA concentrations were reduced by 80, 57, and 81 percent, respectively.

Bioassay tests of freshwater test organisms showed that E-beam treatment of groundwater increased acute toxicity for the fathead minnow (*Pimephales promelas*) but not for the water flea (*Ceriodaphnia dubia*). The increased toxicity for the fathead minnow was attributed primarily to formation of toxic by-products in the effluent, including haloacetic acids and aldehydes (Topudurti and others, 1998).

Several VOCs present in the contaminated groundwater were volatilized and detected in the cooling air, including carbon tetrachloride; chloroform; 1,2-DCA; PCE; 1,1,1-TCA; TCE; and BTEX. These VOCs were converted to CO_2, CO, and phosgene. Hydrochloric acid (HCl), nitrous oxide, and O_3 were also formed in the air phase (Topudurti and others, 1998)

Groundwater treatment costs were estimated for two scenarios, in each of which the HVEA E-beam system was assumed to treat about 1,200,000 m^3 of contaminated groundwater. In Case 1, the groundwater was assumed to contain unsaturated VOCs (PCE and TCE). In this scenario, the groundwater treatment costs directly associated with the E-beam system were \$1.21/m^3 of water treated for a system with a beam power of 21 kW operating at a 150-L/min flow rate for 15 years. In Case 2, the groundwater was assumed to contain saturated VOCs (carbon tetrachloride; chloroform; 1,2-DCA; and 1,1,1-TCA) and aromatic VOCs (BTEX) as well as PCE and TCE. In this scenario, the groundwater treatment costs were \$1.77/m^3 of water treated for a system with a beam power of 21 kW operating at a 76-L/min flow rate for 30 years. Treatment costs included treatability study and system design, mobilization and startup, one-time system capital, labor, utility, equipment maintenance, residual waste shipping and handling, and site demobilization costs (Alvarez and others, 1998).

In another application, an HVEA E-beam system was tested to examine its removal efficiency for MTBE in groundwater. Experiments were conducted using a mobile system housed in a 15- by 2.4-m semi trailer containing the E-beam unit with an accelerating voltage of 500 keV and a beam power of 20 kW. Groundwater samples with a pH of between 7.7 and 8.8 were collected for the study. The initial MTBE concentration in the samples was 170 µg/L. E-beam irradiation at a dose of 250 kilorads (krads) resulted in a 92 percent reduction in MTBE concentration. At a dose of 500 krads, the MTBE concentration fell to 1.4 µg/L (99 percent removal). Tert-butyl alcohol and tert-butyl formate were identified as MTBE irradiation by-products. MTBE removal was affected by the presence of carbonate alkalinity, which created competition for •OH (Cooper and others, 2000).

Pilot-Scale Applications

VOCs in groundwater have been removed using ANPO processes on a pilot scale. This section presents pilot-scale evaluation results for the

O_3/H_2O_2 process in terms of its removal of the following VOCs from groundwater.

ANPO Process	VOCs Removed
• O_3/H_2O_2	• PCE; TCE

An O_3/H_2O_2 system was pilot-tested at a semiconductor manufacturing facility in Essex Junction, Vermont, U.S.A. The system was used to treat groundwater contaminated with PCE and TCE. The system contained a metering pump that added 35 percent H_2O_2 to groundwater and O_3 generators that injected ozonated air into the system influent through four Venturi-type injectors. Groundwater from an on-site bedrock production well was pumped into the system at a flow rate of about 900 L/min. A static mixer was used to agitate the influent during treatment. Treated groundwater was pumped to two carbon adsorption units for final treatment. The initial groundwater concentrations of PCE and TCE were 3.2 and 0.17 mg/L, respectively. The O_3 dose was 1 to 2 mg/L, and the H_2O_2 dose was 0.5 to 1 mg/L. The retention time was 15 to 20 minutes. Under these conditions, the O_3/H_2O_2 system achieved 91 percent removal of PCE, and TCE concentrations fell below the detection limit. The estimated treatment cost was about $11,000; no breakdown of the cost is available (Clancy and others, 1996).

A pilot-scale O_3/H_2O_2 system was field-tested at the Department of Water and Power in Los Angeles, California, U.S.A. The system was used to treat PCE- and TCE-contaminated groundwater from a drinking water well. The system consisted of an O_3 contactor column reactor, a four-stage turbine mixer, and an eight-element static mixer (into which H_2O_2 was injected). The influent PCE and TCE concentrations were about 12 and 100 µg/L, respectively. The flow rate was maintained at 0.25 liter per second (L/s), corresponding to a retention time of 15 minutes. The optimum H_2O_2:O_3 dose ratio was 0.4 to 0.5 by weight. At an O_3 dose of 9.5 mg/L and an H_2O_2 dose of 3 mg/L, 88 and 99 percent of the PCE and TCE were removed, respectively. The estimated treatment cost was $38/L of groundwater treated based on a volume of 7,570 L. This cost includes capital, O&M, and granular activated carbon replacement costs (Aieta and others, 1988).

Bench-Scale Studies

This section summarizes the results of bench-scale studies of the effectiveness of ANPO processes for VOC removal from groundwater. The bench-scale results are summarized only for studies that provide information beyond that discussed above for the commercial- and pilot-scale applications. This section presents bench-scale study results for the use of the Fenton, O_3/H_2O_2, and acoustic cavitation processes to remove the following VOCs from groundwater and synthetic wastewater.

ANPO Process	VOCs Removed
• Fenton	• Benzene; chloroform; TCE; toluene; 1,2,3-trichloropropane
• O_3/H_2O_2	• Chloroform; 1-chloro-pentane; 1,2-DCA; 1,1-dichloropropene; PCE; TCE; toluene
• Acoustic cavitation	• Ethane; methane; TCE

Fenton

Vella and Veronda (1993) have studied the degradation of TCE (10 mg/L) in synthetic wastewater by the Fenton process. The reaction was maintained at a pH between 3.9 and 4.2 and at an Fe(II):H_2O_2 molar ratio of 0.2. The kinetics of the reaction were studied using H_2O_2 doses of 53 and 75 mg/L. At H_2O_2 doses of 53 mg/L or more, over 80 percent of the TCE was removed within 2 minutes. The authors suggest that pH adjustment to about 4 is required for the Fenton process to be an effective treatment approach.

Fenton's reagent treatment of 1,2,3-trichloropropane in synthetic wastewater has also been studied. The initial concentration of the contaminant was 150 mg/L. Chloroacetic acid; 1,3-dichloropropanone; and formic acid were identified as reaction by-products. In the study, a pH range of 2.0 to 3.3 was required for optimum destruction efficiency. In addition, increasing the Fe(II) concentration, temperature, or both increased the rate of 1,2,3-trichloropropane destruction (Hunter, 1996).

The Fenton process has been used in bench-scale treatment of organics in groundwater. Benzene, chloroform, and toluene were present at initial concentrations of 2, 5.8, and 43 mg/L, respectively. Other parameters studied included chemical oxygen demand (COD) (present at 490 mg/L) and total organic carbon (TOC) (present at 120 mg/L). Optimum conditions were found to include a

Fe(II):H_2O_2 molar ratio of 0.25 and a pH of 4. Under these conditions, the following removal efficiencies were achieved: benzene, 82 percent; chloroform, >91 percent; and toluene, 78 percent. In addition, COD and TOC were reduced by 63 and 71 percent, respectively. At a pH above 4.5, the TOC removal efficiency stabilized, and significant precipitation of ferrous and ferric hydroxides was observed (Kochany and Lugowski, 1998).

O_3/H_2O_2

Chloroform removal from groundwater at Rocky Mountain Arsenal in Commerce City, Colorado, U.S.A., was studied using the O_3/H_2O_2 process in a bench-scale study conducted by Zappi and others (1992). Groundwater samples were collected from two locations at the arsenal called Basin A and South Plants. Chloroform was present in groundwater at Basin A and South Plants at 33.4 and 0.738 mg/L, respectively. During the study, O_3 was continuously sparged into a 1-L batch reactor at a rate of 3 mg/L. For the treatment of Basin A groundwater, the optimum H_2O_2 dose for the amount of O_3 added was in the range of 0.25 to 1 mg/L. About 90 percent of the chloroform was removed during 20 minutes of batch treatment. For the treatment of South Plants groundwater, the optimum H_2O_2 dose for the amount of O_3 added was in the range of 1 to 10 mg/L. Under these conditions, about 90 percent of the chloroform was removed within 30 minutes.

Another bench-scale study examined degradation of chlorinated hydrocarbons, including 1-chloropentane; 1,2-DCA; 1,1-dichloropropene; and TCE, using the O_3/H_2O_2 process. Although the combination of the two oxidants enhanced production of secondary oxidants, resulting in an accelerated process, a significant amount of the O_3 applied was consumed by natural •OH scavengers, including dissolved organic matter, bicarbonate ion, and carbonate ion. The researchers suggest that such problems could be overcome by introducing an ozonation step to eliminate the •OH scavengers before using O_3 and H_2O_2 to treat the more recalcitrant compounds (Masten and Hoigne, 1992).

An O_3/H_2O_2 process was evaluated in a bench-scale study using PCE- and TCE-contaminated groundwater in Oitti, Finland. The pH of the groundwater from the contaminated well was 6.8, and the alkalinity was 55 mg/L as $CaCO_3$. Groundwater samples were diluted to establish PCE and TCE concentrations equivalent to those detected in the drinking water (100 to 200 µg/L). Experiments were performed using an O_3 dose of 7 mg/min and a H_2O_2:O_3 dose ratio of 0.7 on a mass basis. Under these conditions, 92 and 96 percent of the PCE and TCE, respectively, were removed within 5 minutes (Hirvonen and others, 1996).

Glaze and Kang (1988) conducted batch studies of O_3/H_2O_2 degradation of PCE and TCE in groundwater collected from two wells owned and operated by the Department of Water and Power in Los Angeles, California, U.S.A. The groundwater alkalinity in both wells ranged from 200 to 300 mg/L as $CaCO_3$, and the pH ranged from 7.2 to 7.4. The groundwater also contained a TOC concentration of 1.1 mg/L. During a run with the initial concentrations of PCE and TCE at 55 and 475 µg/L, respectively, 405 µg/L of chloride ions was formed in 20 minutes, and the PCE and TCE concentrations decreased to 5 and 8 µg/L, respectively. These findings indicated that at least 97 percent of the PCE and TCE degraded to chloride ions during the process. High levels of bicarbonate ions in the groundwater significantly decreased the efficiency of PCE and TCE removal, suggesting that softening of the groundwater prior to oxidation might improve the process.

The O_3/H_2O_2 process has also been evaluated in terms of oxidation of toluene in synthetic wastewater. A total of 91 experiments were conducted using a H_2O_2 dose range of 0.0002 to 0.02 mole per liter (M), a toluene concentration range of 0.00075 to 0.0015 M, and a pH range of 3 to 11. The experiments were designed to provide a molar ratio of H_2O_2 to O_3 up to about 120. Under acidic conditions (a pH of 3), the process is controlled by direct oxidation of O_3 molecules, resulting in low reaction rates. Under alkaline conditions (a pH of 10 or above), formation of •OH primarily determines the rate of oxidation (Kuo and Chen, 1996).

Acoustic Cavitation

Acoustic cavitation was evaluated in terms of oxidation of ethane and methane under an argon atmosphere. A frequency of 300 kHz and an intensity of about 2 watts per square centimeter (W/cm^2) were used to induce acoustic cavitation in synthetic wastewater. The primary by-products of methane oxidation included acetylene, ethane, ethylene, and hydrogen. Butadiene, n-butane, 1-butene, n-butyne, 2-methyl-butene, 2-methyl-propane, propane, propene, and propyne were among the other by-products observed. The decomposition products of ethane were the same as those of methane but had higher yields (Hart and others, 1990).

In batch experiments, acoustic cavitation was evaluated in terms of mineralization of TCE in synthetic wastewater. A frequency of 20 kHz and a 600-watt (W) power source were used. An initial solution pH between 3 and 11 did not affect TCE removal, and bicarbonate concentrations of up to 10 millimoles per liter (mM) had no significant effect on TCE destruction. Higher bicarbonate concentrations (about 100 mM) caused a significant reduction in the destruction rate, suggesting that radical-mediated degradation of organics is important in acoustic cavitation. The presence of metal/metal oxides and H_2O_2 (at 1 mM) did not enhance TCE destruction rates (Cyr and others, 1999).

In another study, acoustic cavitation was used for TCE (3.34 mM) at frequencies of 20 and 520 kHz. The reaction temperature was maintained at about 32 °C in the 20-kHz reactor and about 30 °C in the 520-kHz reactor. TCE degradation was energetically more efficient at 520 kHz. The primary volatile compounds identified as by-products include chloroacetylene; dichloroacetylene; 1,4-dichloro-1,3-butadiene; hexachlorobutadiene; PCE; and pentachlorobutadiene (Drijvers and others, 1996).

Drijvers and others (1999) have used a modified acoustic cavitation process that couples ultrasound with H_2O_2 and copper oxide to degrade TCE (3.34 mM). Acoustic cavitation was performed at a frequency of 520 kHz using a 12-W power source and 100 mM of H_2O_2 and 1 milligram per milliliter of copper oxide were applied. The temperature was maintained at 30 °C during acoustic cavitation. TCE removal was not enhanced by the presence of H_2O_2 and copper oxide.

3.1.2 SVOC-Contaminated Groundwater

SVOCs have been removed from groundwater using the Fenton and hydrodynamic cavitation processes at the commercial scale. The SCWO process has been used to treat SVOCs in synthetic wastewater at the pilot scale. Oxidation of SVOCs by the Fenton, O_3/H_2O_2, electrochemical oxidation, acoustic cavitation, and gamma-ray processes has been evaluated at the bench-scale level. This section describes the results of these applications.

Commercial-Scale Applications

SVOCs in groundwater have been treated using the Fenton and hydrodynamic cavitation processes at the commercial scale. This section presents performance data from field studies that involved use of the Geo-Cleanse® Fenton and OSI HYDROX hydrodynamic cavitation treatment systems to remove the following SVOCs from groundwater.

ANPO Process	SVOCs Removed
• Fenton	• PAHs
• Hydrodynamic cavitation	• Acenaphthene; anthracene; benzo(a)-anthracene; chrysene; fluoranthene; fluorene; phenanthrene; pyrene

Geo-Cleanse® Fenton System

In 1999, the Geo-Cleanse® in situ Fenton system was used at a manufactured gas plant in Burlington, Wisconsin, U.S.A., to treat PAH-contaminated groundwater. The initial total PAH concentration in groundwater collected from two monitoring wells, M/V-4 and M/V-5, was 630 and 400 µg/L, respectively. The system treated about 100 m^3 of groundwater. About 30,000 L of 50 percent H_2O_2; 570 L of 66 percent H_2SO_4; 45 L of 85 percent H_3PO_4; and 23 kg of $FeSO_4$ were injected at nine locations in the treatment zone over 8 consecutive days. As part of the treatment, Geo-Cleanse used calcium phosphate as a stabilizer for the reaction; however, the amount of stabilizer used is unknown. The total treatment time is unknown. The concentration of total PAHs in M/V-4 and M/V-5 was reduced by 99 and 90 percent, respectively. No TICs were detected when groundwater samples were analyzed using SW-846 Method 8260. According to Geo-Cleanse, the total treatment cost was about $130,000, which includes equipment rental, reagent, mobilization, and labor costs (Geo-Cleanse, 2000).

OSI HYDROX Hydrodynamic Cavitation System

Groundwater contaminated with furans, PAHs, and VOCs was treated in a 7,600-L/min OSI HYDROX hydrodynamic cavitation system. Concentrated creosote chemicals were collected from the bottom of wells in Visalia, California, U.S.A., and were mixed with well water for treatment. The addition of the chemicals rendered the well water opaque. The raw system influent contained the following PAHs: acenaphthene (300 mg/L), anthracene (21 mg/L), benzo(a)anthracene (24 mg/L), chrysene (20 mg/L), fluoranthene (100 mg/L), fluorene (120 mg/L), phenanthrene (250 mg/L), and pyrene (160 mg/L). During system operation, 41 kW of power was consumed in treating the groundwater for 9 hours.

Acenaphthene, anthracene, benzo(a)anthracene, chrysene, fluoranthene, fluorene, phenanthrene, and pyrene concentrations were reduced by 92, >99, >99, >99, 70, 91, 55, and 83 percent, respectively. According to OSI, the total treatment cost was about $200,000, which includes the capital cost and an O&M cost of $0.65/m^3 of groundwater treated. The estimated cost savings associated with treating the contaminated groundwater using ANPO rather than disposing of it by conventional methods were >$500,000 (Pisani and others, 1997; OSI, 2000).

Pilot-Scale Application

Li and others (1994) have studied removal of acetic acid, n-octanol, and phenol from synthetic wastewater at the pilot-scale level using the SCWO process. Wastewater was run through a 6.1-m-long, concentric tube reactor at flow rates of 0.75 to 1.9 L/min. Under temperature conditions of 420 to 440 °C and a pressure of 25 MPa, an initial concentration of 4,300 mg/L of acetic acid was reduced by >92 percent after 90 seconds of treatment. Under similar temperature and pressure conditions, an initial concentration of 290 mg/L of phenol was reduced by >98 percent after 11 seconds of treatment, and an initial concentration of 660 mg/L of n-octanol was reduced by >99 percent after 85 seconds.

Bench-Scale Studies

This section summarizes the results of bench-scale studies on the effectiveness of ANPO processes in removing SVOCs from groundwater. The bench-scale results are summarized only for studies providing information beyond that discussed above for the commercial- and pilot-scale applications. This section presents bench-scale study results for the use of the Fenton, O_3/H_2O_2, electrochemical oxidation, acoustic cavitation, and gamma-ray processes to remove the following SVOCs from groundwater and synthetic wastewater.

ANPO Process	SVOCs Removed
• Fenton	• Acenaphthene; aniline; benzothiazole; carboxin; chlorobenzene; 2-chlorobenzoate; 3-chlorobenzoate; 4-chlorobenzoate; p-chlorobiphenyl; 2-CP; 3-CP; 4-CP; o-cresol; 2,3-dichlorophenol (DCP); 2,4-DCP; 2,5-DCP; 2,6-DCP; 3,4-DCP; 2,4-dinitrophenol (DNP); 1,4-dioxane; fluorene; hexamine; 2-mercaptobenzothiazole; 2-methyl-1,3-dioxolane; nitrobenzene; 2-nitrophenol (NP); 4-NP; N-nitrosodimethylamine; N-nitrosodiphenylamine; phenanthrene; phenol; 2,4,5-trichlorophenol (TCP); 2,4,6-TCP
• O_3/H_2O_2	• Acetone; chlorobenzenes; EDTA; (1-hydroxyethylidene)biphosphonic acid; methanediphosphonic acid; organophosphoric acid triesters; tetrahydrofuran-tetracarboxylic acid; triethylene glycol dimethyl ether
• Electrochemical oxidation	• Alkylbenzene sulfonate; chlortetracycline; 2-CP; 4-CP; 2,6-DCP; EDTA; fatty alcohol ethoxylate F1416-7; lignin; linear alkylbenzene sulfonate; 2-(4-methylphenoxy)-ethanol; nonylphenol ethoxylate N9; phenols; tannic acid
• Acoustic cavitation	• Acenaphthylene; L-ascorbic acid; chlorobenzene; 1,4-dioxane; 4-CP; Freon-113; 2-methyl-1,3-dioxolane; nitrobenzene; 4-NP; sodium pentachlorophenate

ANPO Process	SVOCs Removed
• Gamma-ray	• 2-CP; 3-CP; 4-CP; 2,4-DCP; EDTA; nitrilotriacetic acid; 2,4,6-TCP

Fenton

Lipczynska-Kochany and others (1995) have studied the use of Fenton's reagent to degrade 4-CP (5×10^{-4} M) in synthetic wastewater at the bench scale. Experiments were conducted under the following conditions: a $FeSO_4$ dose of 4×10^{-5} M, a H_2O_2 dose of 4×10^{-3} M, an initial pH of 7.1 to 8.2, a contact time of 20 minutes, and a flow rate of 1 mL/min. The chemicals 4-chlorocatechol and hydroquinone were identified as by-products. Bicarbonate and phosphate anions slowed the degradation process. To optimize treatment efficiency, the researchers suggest reducing the inhibiting influence of bicarbonate and phosphate anions on the degradation of CPs by conducting Fenton oxidation at a moderately low pH.

In another bench-scale study, Fenton's reagent was applied to degrade 2,4-DNP; nitrobenzene; 2-NP; and 4-NP in aerated synthetic wastewater. NP degradation by the Fenton reaction was faster than that of nitrobenzene. When the NP:ferrous chloride ($FeCl_2$) molar ratio was kept at about 3 (specifically, 1×10^{-4} M of NPs to 3.5×10^{-5} M of $FeCl_2$), 90 percent of the 2,4-DNP; 2-NP; and 4-NP was destroyed in 3, 4, and 3.5 hours, respectively. Nitrobenzene was degraded by 90 percent in 15 hours. Degradation rates increased and aromatic oxidation by-products for all chemicals were removed when the contaminant to $FeCl_2$ ratio was changed to about 0.3 (specifically, 1×10^{-4} M of NPs to 3×10^{-4} M of $FeCl_2$). An excess of H_2O_2 was used in all cases (the contaminant:H_2O_2 molar ratio was 0.056) (Lipczynska-Kochany, 1991).

Tachiev and others (1998) have compared the oxidation kinetics of 2,4-DCP; 2,4-DNP; and phenol using the Fenton process and a CMHPOS in completely mixed batch reactors. Fenton's reagent uses Fe(II) in free form, and CMHPOS uses Fe(III) in complexed form, involving DTPA, EDTA, and nitrilotriacetic acid as chelating ligands. Reaction rates for the Fenton process were strongly affected by pH; the process was active only in the low acidic range (pH <4). A pH of 3.5 facilitated optimum oxidation. CMHPOS, however, could be applied in the neutral pH range (pH 6 to 9) and acidic pH ranges. Like Fenton oxidation, CMHPOS can completely oxidize susceptible organic compounds including anilines, CPs, NPs, and phenols.

The Fenton process was used to oxidize three PAHs (acenaphthene, fluorene, and phenanthrene) in organic-free water. Studies were conducted under the following initial conditions: an Fe(II) dose of (0 to 2×10^{-4} M), an H_2O_2 dose of 10^{-5} to 10^{-1} M), a pH of 2 to 12, a bicarbonate ion concentration up to 10^{-3} M, and concentrations of commercial humic substances up to 25 mg/L. Fe(II) and H_2O_2 played a double role during oxidation. At low concentrations, they were initiators of •OH, but at high concentrations, they slowed the oxidation rate. The highest efficiency was achieved at doses of 10^{-3} M for H_2O_2 and 7×10^{-5} M for Fe(II). The researchers found that the process was optimal at a pH of 7; at lower pH, formation of •OH diminished and at higher pH, oxidation by dissolved O_2 was more significant than that by H_2O_2. The presence of bicarbonate ions and humic substances in the water slowed the oxidation rate. The researchers suggest that for natural waters containing significant concentrations of bicarbonates, Fenton oxidation of PAHs could be accomplished after a decarbonation step was performed to reduce the presence of the •OH scavengers. The following process by-products were identified: acenaphthene; 3,4-dihydro-2(H) 1-benzopyran-2-one; dibenzofuran; 2-ethyl-1-naphthaphenol; fluorene; 9-fluorenol; 9-fluorenone; 0-hydroxybiphenyl; phenanthrene; 9-phenanthrenol; and phthalic anhydride (Beltran and others, 1998b).

Groundwater containing 1,4-dioxane and 2-methyl-1,3-dioxolane was treated using Fenton and electro-Fenton processes. Optimum oxidation of 1,4-dioxane (10^{-3} M) in the Fenton process occurred with an H_2O_2 dose of 2.5×10^{-2} M and addition of over 10^{-3} M Fe(II). Under these conditions, 90 percent of the 1,4-dioxane was oxidized in 10 minutes. In the electro-Fenton process, in which H_2O_2 is produced by reduction of dissolved O_2 at the cathode, about 90 percent of the 1,4-dioxane (10^{-3} M) and 2-methyl-1,3-dioxolane (10^{-3} M) was destroyed after 90 minutes of reaction, and complete removal was observed shortly thereafter (Takiyama and others, 1994).

A modified Fenton process involving acoustic cavitation was used to remove 2-CP (100 mg/L) from synthetic wastewater. Acoustic cavitation was conducted at 20 kHz with a power input of 160 W. The H_2O_2 and Fe(II) concentrations tested ranged from 0 to 500 and 0.5 to 10 mg/L, respectively. The temperature in the continuously mixed reactor was maintained at 25 °C, and the solution pH was 3. Reactions were allowed to proceed for 100 minutes. The percent removal increased when a higher

concentration of Fenton's reagent was applied. With Fe(II) at 10 mg/L and H_2O_2 at 500 mg/L, nearly 100 percent of the 2-CP was decomposed, and >80 percent was mineralized based on the TOC removal. The chemical 2-chloro-p-benzoquinone was the major process by-product (Lin and others, 1998a).

Fenton's reagent treatment of phenol in synthetic wastewater was studied. The initial concentration of the contaminant was 2 x 10^{-3} M. The solution temperature and pH were maintained at about 25 °C and 4, respectively. Reaction times ranged from 5 to 60 minutes. The study showed that a pH range of 2 to 4 provided optimum destruction efficiency. In addition, at a constant pH, an increase in ferrous ammonium sulphate dose increased the rate of TOC removal. When a solution of polyethyleneimine was added to initial phenol oxidation product (1,2-dihydroxybenzene), a precipitate formed immediately. The researchers suggest that precipitation of early oxidation products provides an alternative to complete chemical oxidation (conversion of phenol to CO_2) as a means of detoxifying phenolic effluents (Land and Ellis, 1982).

Barbeni and others (1987) have studied the degradation of CPs—specifically, 2-CP; 3-CP; 4-CP; 3,4-DCP; and 2,4,5-TCP—using Fenton's reagent. The study showed that increasing the concentration of Fe(II) enhanced the decomposition process and that increasing the concentration of perchlorate ion inhibited the reaction. In the absence of Fe(II), Fe(III) with H_2O_2 had no effect on CP degradation.

Synthetic wastewater containing o-cresol (200 mg/L) and 2,4-DNP (100 mg/L) was treated using the Fenton process to evaluate the potential for using chemical oxidation to enhance anaerobic biodegradability and reduce toxicity. The experiments were conducted in batch stirred reactors. The reaction pH was maintained between 3 and 4. Reaction by-products formed during o-cresol oxidation include acetic acid, formic acid, and oxalic acid. No by-product information is available for 2,4-DNP oxidation. The treatment was effective in generating biodegradable products and reducing methanogenic toxicity (Wang, 1991).

Koyama and others (1994) have evaluated the effectiveness of the Fenton process in treating synthetic wastewater containing chlorinated aromatic compounds, including 2-chlorobenzoate; 3-chlorobenzoate; 4-chlorobenzoate; p-chlorobiphenyl; 2-CP; 3-CP; 4-CP; 2,3-DCP; 2,4-DCP; and 2,5-DCP. Each chlorinated compound was added to 100 mL of 0.3 percent H_2O_2 and 0.02 percent $FeCl_2$ such that the chlorinated compound's concentration was between 10 and 500 mg/L. The reaction mixture was then incubated for 1 hour in 300-mL flasks at 60 °C and gently stirred. All the chemicals except p-chlorobiphenyl were reduced to concentrations below detection limits. The researchers are unsure of the reasons for p-chlorobiphenyl's persistence but postulate that the compound's low solubility may have hindered oxidation. The by-products consisted primarily of formate and oxalate.

Chou and others (1999) have studied the batch electro-Fenton treatment of hexamine-contaminated synthetic wastewater. When the initial pH exceeded 2.5, current efficiency dramatically decreased because of formation of ferric hydroxide. When the initial Fe(II) ion concentration was about 3,000 mg/L, the initial current efficiency of Fe(II) generation was almost constant (85 to 87 percent). At an initial Fe(II) ion concentration of about 1,000 mg/L, however, current efficiency dropped sharply to 39 percent. The COD removal efficiency was >94 percent after 5 hours of treatment. By-products of hexamine oxidation included ammonium, formaldehyde, formate, methanol, and nitrate. The electro-Fenton process generated limited sludge because after coagulation and pH adjustment, ferric hydroxide sludge was reused to produce Fe(II).

The Fenton process has been used in bench-scale treatment of organics and inorganics in groundwater. The groundwater contained aniline (13 mg/L); benzothiazole (1.8 mg/L); carboxin (6.5 mg/L); chlorobenzene (9.5 mg/L); 2-CP (0.095 mg/L); cresols (0.12 mg/L); 2,4-DCP (0.39 mg/L); 2,6-DCP (0.13 mg/L); 2-mercaptobenzothiazole (12 mg/L); N-nitrosodimethylamine (0.32 mg/L); N-nitrosodiphenylamine (4.2 mg/L); phenol (0.12 mg/L); 2,4,5-TCP (0.18 mg/L); and 2,4,6-TCP (0.04 mg/L). Other parameters studied included COD (490 mg/L) and TOC (120 mg/L). Optimum conditions required a Fe(II):H_2O_2 molar ratio of 0.25 and a pH of 4. Under these conditions, the following removal efficiencies were achieved: aniline (71 percent); benzothiazole (87 percent); carboxin (97 percent); chlorobenzene (95 percent); 2-CP (73 percent); cresols (52 percent); 2,4-DCP (94 percent); 2,6-DCP (85 percent); 2-mercaptobenzothiazole (97 percent); N-nitrosodimethylamine (15 percent); N-nitrosodiphenylamine (78 percent); phenol (84 percent); 2,4,5-TCP (>97 percent); and 2,4,6-TCP (>88 percent). In addition, trichloropropane and TOC concentrations were reduced by 63 and 71 percent, respectively. At pHs above 4.5, TOC removal stabilized, and significant precipitation of ferrous and ferric hydroxides was observed (Kochany and Lugowski, 1998).

O_3/H_2O_2

The effectiveness of the O_3/H_2O_2 process along with that of other advanced oxidation processes was examined in treating acetone (5 mg/L) in a 1-L batch reactor. H_2O_2 was added to acetone solutions at doses of 9.4, 46, 100, and 860 mg/L within buffer solutions. For each H_2O_2 concentration, ozonated air with an O_3 concentration of 2.3 percent was sparged into the reactor. Increasing the H_2O_2 concentration while using a constant O_3 concentration improved overall degradation of acetone to a certain extent. A relatively high H_2O_2 concentration (860 mg/L) had an adverse effect on acetone degradation, probably because of the scavenging effect of excess H_2O_2 on •OH. Reducing the O_3 concentration reduced the efficiency of the process. Acetone degradation was maximized when an H_2O_2 dose of 10 mg/L (added semicontinuously) and an O_3 dose of 2 percent by weight were combined. The acetone concentration was reduced to below the detection limit in 60 minutes of treatment (Toro and others, 2000).

Cortes and others (1996) have investigated use of O_3/H_2O_2 to remove chlorobenzenes (1 to 10 mg/L) and TOC (1,000 mg/L). Because of the electrophilic character of •OH, chlorobenzene was oxidized faster than dichlorobenzene, tetrachlorobenzene, and trichlorobenzene. The halogen groups deactivated the aromatic ring attack by the O_3 molecule. As a result, the more chlorine atoms the compounds had, the lower the removal efficiency. The chemicals 2-CP and 4-CP were identified as the first oxidation by-products.

Synthetic wastewater containing chelating agents, including EDTA, (1-hydroxyethylidene)biphosphonic acid, methanediphosphonic acid, and tetrahydrofurantetracarboxylic acid was treated O_3/H_2O_2 in a bench-scale study. Although EDTA could be destroyed with O_3 alone, removal of the intermediates required the presence of H_2O_2. Oxidation decreased with increasing pH, probably because of scavenging of •OH by carbonate ions. At low pHs, however, the overall reaction slowed down. Hence, in any practical application, it is necessary to choose an optimal pH for the reaction (Appelman and others, 1996).

Echigo and others (1996) have compared the effectiveness of several advanced oxidation processes, including the O_3/H_2O_2 process, in treating organophosphoric acid triesters (20 mg/L) in synthetic wastewater. Wastewater samples were recirculated in a semi-batch system at a flow rate of 3.6 to 4.0 L/min. The treatment involved an O_3 dose rate of 0.62 mg/L-min and an initial H_2O_2 concentration of 3.4 mg/L. Decomposition rates increased linearly with the O_3 concentration and decreased with an increase in the initial contaminant concentration. Nitrate ions at low concentrations did not affect oxidation rates.

Beschkov and others (1997) have evaluated the effectiveness of the O_3/H_2O_2 process in treating synthetic wastewater contaminated with triethylene glycol dimethyl ether, a typical component of oil reclamation wastewaters. Solutions containing 10 mg/L of triethylene glycol dimethyl ether and 50 mg/L of humic acid were treated in a completely mixed batch tank. H_2O_2 addition increased the efficiency of organic solute removal by ozonation. Continuous addition of 7 percent H_2O_2 resulted in removal of triethylene glycol dimethyl ether to nondetectable concentrations in 5 minutes and removal of >85 percent of the initial TOC concentration in 80 minutes.

Electrochemical Oxidation

Synthetic wastewater containing chlortetracycline, EDTA, lignin, and tannic acid, each at a COD-equivalent concentration of 2,500 plus or minus (±) 200 mg/L, was treated using electrochemical oxidation. Experiments were conducted in a 600-mL batch electrolytic cell with lead dioxide-coated titanium as the anode and a steel plate as the cathode. The study showed that 5,000 mg/L of sodium chloride at a current density of 7,500 milliamperes per square centimeter (mA/cm^2) was a better supporting electrolyte than sodium sulfate and sodium nitrate at the same concentration and current density. In addition, COD and color removal was improved by increasing the sodium chloride concentration and current density. COD removals for chlortetracycline, EDTA, lignin, and tannic acid were 92, 66, 79, and 89 percent, respectively, when sodium chloride was the supporting electrolyte. EDTA is colorless, but color removals for chlortetracycline, lignin, and tannic acid were 98, 95, and 91 percent, respectively, in the presence of sodium chloride. Also, microtox test results also showed that electrochemical oxidation reduced the toxicity of the refractory compounds (Chiang and others, 1997).

Huang and Chu (1991) have evaluated the effectiveness of the electrochemical oxidation process in treating synthetic wastewater containing phenolic compounds. The batch reactions took place in a 600-mL beaker at a constant temperature of 25 °C. Most of the phenolic compounds with a carboxylic group or another hydroxyl group were readily oxidized on the platinum electrode. Phenolate anions and phenoxium cations were formed. Anodic currents were higher and lasted

longer in alkaline solutions than in acid solutions. The removal rates for organic compounds were proportional to the anodic current. Among the phenolic compounds tested, the phenols with the greatest number of hydroxy functional groups were the easiest to oxidize; the greater the number of hydroxy groups, the higher the anodic current.

Electrochemical removal of 2-CP and 2,6-DCP was investigated using porous carbon felt for the anodes. Organic solutions were circulated through an electrolytic cell for 2 to 3 hours. The first oxidation intermediates of the 2-CP and 2,6-DCP solutions were 2-chlorobenzoquinone and 2,6-dichlorobenzoquinone, respectively. The flow rate did not significantly affect reaction kinetics (Polcaro and Palmas, 1997).

Boudenne and Cerclier (1999) have examined use of carbon black as a catalyst in electrochemical oxidation of 4-CP. Carbon black was selected because of its electrical conductivity, resistance to corrosion, low price, chemical inertia toward many chemical products, and high adsorption capacity for phenolic compounds. The reactor consisted of titanium/platinum electrodes in a closed, 2-L cell. The temperature was maintained at 25 °C, the flow rate of the solution through the system was 7.5 L/min, and the current intensity was 15,000 mA. When 0.5 gram of carbon black was used, by-products detected included benzoquinone, catechol, 2-CP, fumaric acid, hydroquinone, maleic acid, phenol, and o-quinone. The number of by-products detected decreased when a larger amount of carbon black was used.

Treatment of synthetic surfactant wastewater containing fatty alcohol ethoxylate F1416-7, 2-(4-methylphenoxy)-ethanol, and nonylphenol ethoxylate N9 was studied using a batch reactor with a lead dioxide anode. The overall surface area of the titanium-supported electrodes was 500 square centimeters (cm^2). The initial surfactant concentration was 100 mg/L. The temperature was maintained at 22 °C, and the pH was maintained at 7.7 to 7.9. After a 1-hour oxidation period with a current density of 10 mA/cm^2, ethylene glycol hexadecanoate, ethylene glycol tetradecanoate, hexadecanoic acid, hexadecanol, tetradecanoic acid, and tetradecanol were identified as by-products of fatty alcohol ethoxylate F1416-7 oxidation. The chemical 4-methylphenol and its degradation product 4-methyl-4-hydroxycyclohexa-2,5-dienon were identified as by-products of 2-(4-methylphenoxy)-ethanol. The by-products of nonylphenol ethoxylate N9 oxidation were not clearly identified.

Leu and others (1998) have studied enhanced electrochemical oxidation of two anionic surfactants, alkylbenzene sulfonate (10 mg/L) and linear alkylbenzene sulfonate (10 mg/L), with addition of H_2O_2. The electrolytic cell was a 1.5-L beaker containing cast-iron plate electrodes with a total surface area of 22.6 cm^2. Table salt was added to elevate the conductivity of the sample surfactant solution. Addition of 100 mg/L of H_2O_2 was found to be highly beneficial for alkylbenzene sulfonate oxidation; the optimum amount of H_2O_2 added was 150 mg/L for linear alkylbenzene sulfonate oxidation. Other optimum operating conditions included addition of 0.05 M sodium chloride; a current density of 16.8 mA/cm^2, a pH of 7, and 8 minutes of treatment time.

Treatment of synthetic wastewater containing phenol (1,000 and 2,520 mg/L of COD) by electrochemical oxidation was studied. The cathode and anode consisted of four pieces of cast iron situated about 1.5 cm apart in the synthetic wastewater. The total effective surface area of the cast-iron electrodes was 324 cm^2. Salinity was adjusted using table salt (up to 3 percent). COD removal reached about 34 percent after 60 minutes of treatment. Addition of a small amount of H_2O_2 greatly enhanced COD removal; after 60 minutes of electrochemical treatment with 60 mg/L of H_2O_2, COD removal increased to 70 percent. A peak COD removal efficiency of about 70 percent occurred at a pH of about 3. Specific information on phenol removal efficiency is not available (Lin and others, 1998c).

Acoustic Cavitation

Acoustic cavitation decomposition of acenaphthylene was evaluated at a frequency of 20 kHz and a power input of 400 W. Aqueous extracts of contaminated soil collected from an old gasoline station site in Germany were treated using acoustic cavitation. The primary by-products identified were 1,1,2-TCA and 1,1,2,2-tetrachloroethane (Leonhardt and Stahl, 1998).

Gonze and others (1999) have evaluated acoustic cavitation as a preoxidation treatment to support biological degradation of sodium pentachlorophenate. Acoustic cavitation was conducted at a frequency of 500 kHz, a power input of 0 to 100 W, and a duration of up to 10 hours. The pH of the sodium pentachlorophenate solution was adjusted to the 6.8 to 7.5 range. The reaction temperature was maintained at about 20 °C. Degradation by-products included tetrachlorobenzoquinone and tetrachlorohydroquinone. Toxicity effects on marine bacteria (*Vibrio fischeri*) and daphnids (*Daphnia magna*) were evaluated after acoustic cavitation to

measure the acute toxicity of organic compounds. Bioluminescence inhibition increased with the pollutant concentration. Toxicity was lowest after 2 and 4 hours when the power density was 220 and 110 kilowatts per cubic meter, respectively.

Hirai and others (1996) have examined decomposition of Freon-113 (100 mg/L) in synthetic wastewater by acoustic cavitation at a frequency of 200 kHz and a power density of 6 watts per cubic centimeter. Decomposition rates increased with increasing chlorofluorocarbon concentration. Decomposition efficiency decreased with increasing acoustic cavitation time, particularly after 30 minutes; this trend was likely due to the rise in temperature and the degassing effect of acoustic cavitation. The decomposition rate was minimally affected by addition of tert-butyl alcohol, a known •OH scavenger, suggesting that the primary pathway in acoustic cavitation decomposition of chlorofluorocarbons is not the reaction with •OH but the high-temperature pyrolysis in the cavitation bubbles.

Barbier and Petrier (1996) have conducted a study of 4-NP degradation by acoustic cavitation combined with addition of O_3. Reactions were conducted in a continuous feed reactor at a pH of 2 and a temperature of 20 °C. The TOC concentration was more dramatically reduced during acoustic cavitation at a frequency of 500 kHz than at 20 kHz. This phenomenon correlates with higher yields of H_2O_2 formed during acoustic cavitation at the higher frequency that in turn correspond to a higher rate of •OH escape from the cavitation bubbles.

Takiyama and others (1994) have evaluated removal of 1,4-dioxane and 2-methyl-1,3-dioxolane from groundwater using acoustic cavitation alone and coupled with H_2O_2 addition. Acoustic cavitation was conducted at a power intensity of 400 W, and the temperature was maintained at 40 °C. About 50 percent removal of each compound (which had an initial concentration of 10^{-3} M) was achieved after 1 hour of treatment. When H_2O_2 (5×10^{-3} M) was introduced into the system, the oxidation process was improved because H_2O_2 initiates increases in the concentration of •OH in solution. When H_2O_2 was added, 70 percent removal of each compound was achieved after 1 hour of treatment.

The acoustic cavitation process was used to degrade L-ascorbic acid in double-distilled water. Acoustic cavitation was conducted at a frequency of 800 kHz. The primary by-products observed were L-erythro-2,3-hexodiulosonic acid and L-glycero-4-hexulos-2-enonic acid. The secondary by-products were glyceric acid, 4-pentulos-2-enonic acid, 2-pentulosonic acid, and tetronic acid. The tertiary by-product was tetraric acid (Portenlänger and Heusinger, 1992).

Drijvers and others (1998) have studied organic intermediate formation under saturated air and argon conditions during acoustic cavitation degradation of chlorobenzene. The contaminant was present in synthetic wastewater at 1.72 mM. Acoustic cavitation was performed at a frequency of 520 kHz using a power input of 14.23 W, and the reaction temperature was maintained at about 30 °C. Solutions were treated at pH levels of 4.7, 7, and 10. No pH effect was observed. With the addition of the •OH scavenger benzoate, no significant degradation took place. Several organic by-products of chlorobenzene degradation were identified under air-saturated conditions, including acetylene, benzene, butadiene, butenyne, CPs, methane, and phenylacetylene. Under argon-saturated conditions, the same by-products were identified except for CPs.

Removal of aromatic compounds such as 4-CP, nitrobenzene, and 4-NP has been studied using acoustic cavitation combined with ozonolysis. Acoustic cavitation was performed at frequencies of 20 kHz (56.1 W of power) and 500 kHz (48.3 W of power). The solution temperature was maintained at about 25 °C. In the 20-kHz reactor, nitrobenzene degraded fastest and 4-NP degraded slowest, but in the 500-kHz reactor, 4-CP degraded fastest while 4-NP degraded slowest. When acoustic cavitation and ozonolysis were combined, there was a degradation enhancement at 20 kHz, but at 500 kHz, the process slowed down. Treatment resulted in contaminant mineralization in 3 hours with the 20-kHz reactor and in 6 hours with the 500-kHz reactor. Aromatic intermediates observed during acoustic cavitation with O_3 were as follows: (1) for nitrobenzene—4-NP, 3-NP, and 4-nitrocatechol; (2) for 4-NP—4-nitrocatechol; and (3) for 4-CP—none (Weavers and others, 1998).

Gamma-Ray

Zona and others (1999) have evaluated detoxification of several CPs (6 to 10 mg/L) in solution by the gamma-ray process, including 2-CP; 3-CP; 4-CP; 2,4-DCP; and 2,4,6-TCP. Gamma irradiations were conducted using a ^{60}Co source and dose rates ranging from 21 to 183 megarads (Mrad) per minute (Mrad/min). A radiation dose of 50 Mrads resulted in concentrations below detection limits for all the compounds except 2-CP, for which 60 Mrads was required to achieve this result. No influence of the dose rate on the degradation rate was observed in the dose rate range studied. To determine the acute toxicity of the aqueous solutions, a

luminescent bacteria test was conducted. Total detoxification was achieved for all compounds studied at a dose of 500 Mrads.

Colloidal TiO_2 was used to catalyze the degradation of EDTA by the gamma-ray process in a bench-scale study. Gamma irradiations were conducted using a ^{60}Co source, at room temperature, and at a dose rate of about 4.7 Mrad/min. Aqueous solutions of 0.02 M EDTA were used; these solutions had an adjusted pH between 4 and 5. Colloidal TiO_2 was added to the solutions at concentrations ranging from 0.01 to 0.1 gram per milliliter. Results showed that the presence of the catalyst increased EDTA degradation by up to 30 percent. The study also showed that dissolved O_2 is critical to the degradation process, indicating that the process involves electron/hole pairs (Su and others, 1998).

A bench-scale study conducted by Toste (1998) involved gamma-ray destruction of nitrilotriacetic acid (12 mM), which was added to an inorganic waste matrix. Almost 100 percent of the nitrilotriacetic acid was destroyed after 100 hours of irradiation at a dose rate of 75,000 rad/hr in a ^{60}Co source; the operating temperature was 90 to 95 °C. Under these conditions, about 91 percent of the TOC was removed. Degradation by-products identified include N-[N'-amino(2-iminoethyl)]-iminodiacetic acid, ethanedioic acid, hexanoic acid, N-hydroxymethyl-N-methyliminoacetic acid, N-(methylamine)imino-diacetic acid, and N-(methyl-N,N'-(dimethylamine)-ethylenediamine)N'-acetic acid.

3.1.3 PCB-Contaminated Groundwater

PCBs have been removed from groundwater using the commercial-scale OSI HYDROX hydrodynamic cavitation treatment system. Groundwater containing about 3 mg/L of PCBs was treated in a 230-L/min OSI HYDROX system in Munich, Germany. The raw groundwater pH was 8.2. About 7 kW of power was consumed in treating the groundwater for 8 hours. Hydrodynamic cavitation reduced the PCB concentration by >99 percent and achieved the treatment goal of 20 µg/L. According to OSI, the total treatment cost was about $65,000, which includes capital cost and an O&M cost of $0.07/m^3 of groundwater treated (OSI, 2000).

3.1.4 Pesticide- and Herbicide-Contaminated Groundwater

This section presents information on removal of the following pesticides and herbicides from aqueous solutions using the Fenton, O_3/H_2O_2, and acoustic cavitation processes at the bench-scale level. No information is available on commercial- or pilot-scale application of ANPO processes to treat pesticide- or herbicide-contaminated groundwater.

ANPO Process	Pesticides and Herbicides Removed
• Fenton	• Chlorophenoxyacid herbicides
• O_3/H_2O_2	• Aldicarb; aldrin; alpha-endosulfan; atrazine; hexachlorobenzene; isoproturon; lindane; linuron; malathion; monocrotophos; m-parathion; terbutryn
• Acoustic cavitation	• Alachlor; atrazine; chlorpropham; parathion

Fenton

Oturan and others (1999) have used the electro-Fenton process to degrade five chlorophenoxyacid herbicides: 2-(4-chloro-2-methyl-phenoxy)propionic acid (1.0 mM); 2-(4-chloro-phenoxy)-2-methylpropionic acid (1.0 mM); 2,4-dichlorophenoxyacetic acid (1.0 mM); 2-(2,4-dichlorophenoxy)propionic acid (1.0 mM); and 2,4,5-trichlorophenoxyacetic acid (0.5 mM). Fe(II) was present at 2 mM. •OH were electrogenerated in two steps: (1) electrochemical reduction of O_2 to superoxide ions and formation of H_2O_2 in an acidic medium and (2) reaction of the H_2O_2 with Fe(II) ions, yielding •OH (the Fenton reaction). Fe(III) ions were electrochemically reduced to Fe(II) ions. The electro-Fenton process allowed the aromatic ring of the chlorophenoxyacid herbicides to be destroyed following rapid polyhydroxylation, resulting in formation of less toxic aliphatic products. The researchers state that the modified Fenton process may provide a low-cost, nonpolluting method for destroying pesticide residues.

O_3/H_2O_2

A bench-scale study was conducted to examine degradation of atrazine and its primary by-products, deethylatrazine and deisopropylatrazine, using the O_3/H_2O_2 process. Optimum oxidation of these compounds took place at a pH of 7, a temperature of 20 °C, and an initial H_2O_2 concentration of 10^{-3} M. Increasing the H_2O_2 concentration above 10^{-2} M led to a significant decrease in the oxidation rate. The

optimum molar ratio of O_3:H_2O_2 was 0.33 (Beltran and others, 1998a).

Ku and Wang (1999) have studied O_3/H_2O_2 decomposition of monocrotophos in deionized water. Results showed that the herbicide was >95 percent decomposed by the O_3/H_2O_2 process within 20 minutes. CO_2, nitrate, and phosphate formed as by-products. Monocrotophos removal increased with a decrease in pH, possibly because of the breakage of the carbon-carbon double bond to form various organic intermediates. However, mineralization of organic intermediates was promoted under alkaline conditions because of formation of •OH. The mode of H_2O_2 addition was observed to affect degradation of monocrotophos. In the batch mode, increased H_2O_2 dose reduced the monocrotophos decomposition rate, possibly because the large amounts of H_2O_2 added initially served as a scavenger for •OH. In the continuous mode, the increased H_2O_2 dose accelerated the decomposition rate until an optimum molar ratio of O_3 to H_2O_2 was reached; the optimum ratio was pH-dependent.

The influence of O_3 and H_2O_2 dose was studied under batch conditions for the degradation of 11 pesticides, including aldicarb (9.5 µg/L), aldrin (13 µg/L), alpha-endosulfan (8.7 µg/L), atrazine (7.3 µg/L), hexachlorobenzene (1 µg/L), isoproturon (10 µg/L), lindane (10 µg/L), linuron (11 µg/L), malathion (11 µg/L), m-parathion (11 µg/L), and terbutryn (10 µg/L) At an H_2O_2:O_3 mass ratio of 0.4, an initial pH of 8.3, and a retention time of 10 minutes, the highest percent removals for the pesticides at an O_3 dose of 5 mg/L were as follows: aldicarb, >99 percent; aldrin, >99 percent; alpha-endosulfan, 49 percent; atrazine, 95 percent; hexachlorobenzene, 48 percent; isoproturon, >99 percent; lindane, 21 percent; linuron, 99 percent; malathion, >99 percent; m-parathion,>99 percent; and terbutryn, >99 percent (Roche and Prados, 1995).

Volk and others (1993) have examined the effects of the O_3/H_2O_2 process on formation of biodegradable dissolved organic carbon during treatment of atrazine-contaminated synthetic water. Based on dissolved organic carbon removal results, the study showed that an H_2O_2:O_3 mass ratio of 0.35 to 0.45 was optimal for oxidation of organic matter. As the ratio increased to 0.4, the amount of biodegradable dissolved organic carbon formed was found to diminish.

Acoustic Cavitation

David and others (1998) have used acoustic cavitation to degrade chlorpropham in synthetic wastewater. Acoustic cavitation was performed at two frequencies, 20 and 482 kHz. Treatment at the higher frequency was determined to be much more efficient for chlorpropham destruction, as the herbicide completely degraded after 45 minutes. At a frequency of 20 kHz, about one-third of the chlorpropham remained after 60 minutes of acoustic cavitation. By-products of chlorpropham degradation included chloride ions, 3-chloroaniline, CO, CO_2, and formic acid. Formation of chlorohydroquinone was also observed during degradation of 3-chloroaniline.

The kinetics of acoustic cavitation decomposition of alachlor (0.7 mg/L) and atrazine (0.8 mg/L) have been evaluated by Koskinen and others (1994). Continuous acoustic cavitation of the herbicides in solution was conducted using 70 to 80 W of power at a frequency of 20 kHz. Acoustic cavitation did not decrease the solution pH for either herbicide as reported by Kotronarous and others (1992a) for parathion decomposition. Koskinen and others (1994) showed that the half-lives of alachlor and atrazine were 330 and 86 minutes, respectively.

Kotronarous and others (1992a) have examined parathion removal from synthetic wastewater by acoustic cavitation at a frequency of 20 kHz and a power intensity of 75 W/cm^2. The temperature was maintained at 30 °C. Nitrate, nitrite, p-NP, oxalate, phosphate, and sulfate were identified as by-products of parathion degradation. The pH of the solution changed during acoustic cavitation; after 30 minutes, the pH dropped from 6.1 to 4.1 and then stabilized. The observed decrease in pH was attributed to acid formation during acoustic cavitation.

3.1.5 Dioxin- and Furan-Contaminated Groundwater

Dioxins and furans have been removed from groundwater using the commercial-scale OSI HYDROX hydrodynamic cavitation treatment system. Groundwater containing furans, PAHs, and VOCs was treated in a 7,600-L/min OSI HYDROX system. Dibenzofuran was present in raw water at 110 mg/L. Concentrated creosote chemicals were collected from the bottom of wells in Visalia, California, U.S.A., and were mixed with well water for treatment. The addition of the chemicals rendered the well water opaque. About 41 kW of power was consumed in treating the groundwater for 9 hours. Treatment continued until the water became clear and the

dibenzofuran concentration reached an acceptable discharge level. Hydrodynamic cavitation reduced the concentration of the dibenzofuran by 91 percent. According to OSI, the total treatment cost was about $200,000, which includes the capital cost and an O&M cost of $0.65/m^3 of groundwater treated. The estimated cost savings associated with treating the contaminated groundwater using ANPO rather than disposing of it by conventional methods were >$500,000 (Pisani and others, 1997; OSI 2000).

3.1.6 Explosive- and Degradation Product-Contaminated Groundwater

Explosives and their degradation products in groundwater have been removed using the Fenton, SCWO, and E-beam processes at the commercial-scale level. Use of the Fenton and gamma-ray processes to remove such contaminants in synthetic wastewater has been studied at the bench-scale level. The results of the commercial-scale applications and bench-scale studies are discussed below.

Commercial-Scale Applications

This section summarizes the effectiveness of the Geo-Cleanse® Fenton, General Atomics SCWO, and HVEA E-beam treatment systems in removing the following explosives and their degradation products from contaminated groundwater.

ANPO Process	Explosives and Their Degradation Products Removed
• Fenton	• Hexahydro-1,3,5-trinitro-1,3,5-triazine (RDX); octahydro-1,3,5,7-tetra-nitro-1,3,5,7-tetrazocine (HMX); 2,4,6-trinitro-toluene (TNT)
• SCWO	• CYH propellant containing HMX
• E-beam	• DMMP

Geo-Cleanse® Fenton System

A Geo-Cleanse® in situ Fenton system was used to treat contaminated groundwater under an outwash area of a production line at the Milan Army Ammunition Plant in Tennessee, U.S.A. The primary contaminants of concern in the groundwater were explosives; specifically HMX, RDX, and TNT were present at a total of 140 µg/L. The system treated about 1,100 m^3 of groundwater. About 6,800 L of 50 percent H_2O_2; 76 L of 66 percent H_2SO_4; 15 L of 85 percent H_3PO_4; and 23 kg of $FeSO_4$ were injected at three locations in the treatment zone over 3 consecutive days. As part of the treatment, Geo-Cleanse used calcium phosphate as a stabilizer for the reaction; however, the amount of stabilizer used is unknown. After a treatment time of 60 days, the treatment reduced the total explosives concentration by 80 percent. Nitrate was identified as a treatment by-product. According to Geo-Cleanse, the total treatment cost was about $97,000, which includes equipment rental, reagent, mobilization, and labor costs (Geo-Cleanse, 2000).

General Atomics SCWO System

A General Atomics SCWO system installed at a Thiokol site near Brigham City, Utah, U.S.A., was demonstrated for the treatment of CYH propellant containing HMX. Treatment was performed in two test runs involving up to 315 kg of propellant, which contained up to 21 percent hydrolyzed solution during a continuous 34-hr run. Treatment flow rates ranged from 1.1 to 1.7 L/min, and reaction temperatures ranged from 450 to 580 °C. System pressure was maintained at about 28 MPa. Removals were measured based on the amount of TOC destroyed. At a temperature of 575 °C and a retention time of 33 seconds, >99 percent of the TOC was destroyed (Spritzer and others, 1995).

HVEA E-Beam System

In full-scale experiments, HVEA E-beam treatment system was used to remove DMMP from solutions with pHs of 4 and 9. Wastewater samples were recirculated at 400 L/min for about 2 hours. The delivered radiation dose was constant at 0.550 Mrad per pass; the final absorbed doses were 3 (pH of 4) and 2 (pH of 9) Mrads. DMMP removal was more effective at a pH of 4 than at a pH of 9 because of reduced radical scavenging by carbonate species. Diphosphonic acid, methane, and phosphate ions were formed as by-products. At a pH of 4, an influent DMMP concentration of 47 mg/L, and an absorbed dose of 3 Mrads, the removal efficiency was 89 percent. At a pH of 9, an influent DMMP concentration of 62 mg/L, and an absorbed dose of 2 Mrads, the removal efficiency was 74 percent (Nickelsen and others, 1998).

Bench-Scale Studies

This section summarizes the results of bench-scale studies on the effectiveness of the Fenton and

gamma-ray processes in removing the following explosives and their degradation products from synthetic wastewater.

ANPO Process	Explosives and Their Degradation Products Removed
• Fenton	• 2,4-Dinitrotoluene; RDX; TNT
• Gamma-ray	• DMMP

Fenton

Bier and others (1999) discuss Fenton treatment in synthetic solutions containing RDX. Initial RDX concentrations ranged from 20 to 35 mg/L. About 2 mL of 30 percent H_2O_2 and 0.5 mL of 143 mM Fe(II) were added to about 48 mL of RDX solution. Under these conditions, complete RDX destruction was observed within 24 hours, with RDX transformation occurring most rapidly within the first 300 minutes at a pH of 3. The primary by-products observed were ammonium ions, CO_2, formic acid, methylene dinitramine, and nitrate ions.

In a related study, Li and others (1997) examined removal of TNT by Fenton oxidation. Treatment of synthetic wastewater containing TNT (70 mg/L) with Fenton's reagent (1 percent H_2O_2 and 80 mg/L of Fe[II]) at a pH of 3 resulted in complete destruction of the explosive within 24 hours; 40 percent mineralization was also observed. The chemicals 1,3,5-trinitrobenzene and 2,4,6-trinitrobenzoic acid were formed after 15 minutes of treatment. Oxalic acid was the primary organic by-product of the oxidation. Increasing the initial H_2O_2 concentration, Fe(II) concentration, or both increased both TNT removal and mineralization rates. The initial TNT concentration (6.2 to 65.5 mg/L) had little influence on degradation rates. The optimum pH for the reaction was 3.

In another bench-scale study, Fenton's reagent was used to oxidize 2,4-dinitrotoluene. At H_2O_2:dinitrotoluene:Fe(II) molar proportions of 20:1:2.5, the compound was completely removed in 5 hours at 21 °C. Reaction by-products included benzoic acid; 1,1'-biphenyl,3,3',4,4'-tetramethyl; 1,3-dinitrobenzene; 1-isocyanato,3-nitrobenzene; and nitroaniline. At higher temperatures, H_2O_2 was observed to deplete more quickly, and the TOC removal rate was enhanced. The required retention time decreased when the temperature was increased to about 30 °C and when Fe(III) was used in conjunction with Fe(II). Aeration of the reaction mixture decreased the concentrations of dimers in the reaction by-products (Mohanty and Wei, 1993).

Gamma-Ray

Nickelsen and others (1998) treated synthetic wastewater spiked with DMMP in a bench-scale study using the gamma-ray process and a ^{60}Co source. Treatment was conducted at pHs of 4 and 9. DMMP removal was more effective at a pH of 4 because of reduced •OH scavenging by carbonate species. At a pH of 4, an initial DMMP concentration of 1.4 mg/L, and an absorbed dose of 0.27 Mrad, the removal efficiency was 86 percent. At a pH of 9, an initial DMMP concentration of 35 mg/L, and an absorbed dose of 1 Mrad, the removal efficiency was 65 percent.

3.1.7 Humic Substance-Contaminated Groundwater

No information is available on commercial-scale ANPO processes used for removing humic substances from groundwater. However, the O_3/H_2O_2 process has been evaluated at the pilot scale, and O_3/H_2O_2 and acoustic cavitation processes have been evaluated at the bench scale. The results of these evaluations are summarized below.

Pilot-Scale Application

Groundwater containing high color levels (up to 25 color units [c.u.]) from redwood chips was treated using the O_3/H_2O_2 process in a pilot-scale study in southern California, U.S.A. To achieve the U.S. EPA secondary standard of 15 c.u., the Huntington Beach Water Department in Orange County, California, U.S.A., used a 76-L/min pilot-scale O_3 generator with a retention time of 13 minutes. The H_2O_2:O_3 mass ratios used ranged from 0.2 to 0.5. Color reduction of >90 percent was achieved at an average transfer O_3 dose of 6.5 mg/L and an H_2O_2 dose of about 3.3 mg/L. On a larger scale, the Mesa Consolidated Water District in Orange County, California, U.S.A., operated a 12,000-L/min O_3 treatment system with a retention time of 16 minutes. At an applied O_3 dose of 7 mg/L and an H_2O_2:O_3 mass ratio of 0.35, the system reduced the color level (initially 65 c.u.) in groundwater by 85 percent (Tan and others, 1990).

Bench-Scale Studies

This section summarizes the results of bench-scale studies of the effectiveness of the O_3/H_2O_2 and acoustic cavitation processes in removing the

following humic substances from synthetic wastewater and groundwater.

ANPO Process	Humic Substances Removed
• O_3/H_2O_2	• Glycine
• Acoustic cavitation	• Humic acid; 3-hydroxy-benzoic acid; purified fulvic acid; unspecified, naturally occurring organic carbon

$O_3H_2O_2$

Begner and others (1999) have studied oxidation of glycine in synthetic wastewater by the O_3/H_2O_2 process in a 4-L, cylindrical batch reactor. By-products included ammonium ions, formic acid, oxalic acid, and oxamic acid.

Acoustic Cavitation

Nagata and others (1996) studied the decomposition of humic acid and 3-hydroxybenzoic acid in synthetic wastewater by the acoustic cavitation process as well as the potential for chloroform formation. Wastewater samples were treated at a frequency of 200 kHz with a power input intensity of 200 W. Decomposition of 3-hydroxybenzoic acid was almost completely inhibited by addition of butanol, which is an effective •OH scavenger. The potential for chloroform formation decreased with increasing treatment time, but the decrease in the chloroform formation potential did not correspond to the decrease in humic acid and 3-hydroxybenzoic acid concentrations on a one-to-one basis.

Acoustic cavitation was combined with use of O_3 to mineralize natural organic matter in a bench-scale batch reactor. Study samples consisted of synthetic wastewater containing purified fulvic acid (10 mg/L) and untreated natural groundwater (with TOC concentrations ranging from 2 to 8 mg/L) drawn from an aquifer in Orange County, California, U.S.A. About 91 percent of the TOC was removed from the synthetic wastewater samples in 60 minutes of continuous O_3 application and acoustic cavitation at a frequency of 20 kHz and a power input of 55 W. Acoustic cavitation and O_3 treatment of natural groundwater samples (the pH was adjusted to 4 in order to remove bicarbonate) resulted in TOC removal of 98 percent after 40 minutes. The O_3 decomposition rate was significantly increased by acoustic cavitation power of up to 70 kW; no further rate increase was observed at higher powers (Olson and Barbier, 1994).

3.1.8 Inorganic-Contaminated Groundwater

This section discusses removal of inorganics from groundwater and synthetic wastewater at the bench-scale level using the Fenton and O_3/H_2O_2 processes. No information was available on use of commercial- or pilot-scale ANPO processes to treat inorganic-contaminated groundwater.

ANPO Process	Inorganics Removed
• Fenton	• Ammonia
• O_3/H_2O_2	• Ammonia

Fenton

The Fenton process was used for bench-scale treatment of groundwater containing inorganics and organics. Ammonia was present at a concentration of 290 mg/L. Other parameters studied include COD (490 mg/L) and TOC (120 mg/L). Optimum treatment conditions included a Fe(II):H_2O_2 molar ratio of 0.25 and a pH of 4. Under these conditions, ammonia, COD, and TOC were reduced by 10, 63, and 71 percent, respectively. At pHs above 4.5, TOC removal stabilized, and significant precipitation of ferrous and ferric hydroxides was observed (Kochany and Lugowski, 1998).

O_3/H_2O_2

Kuo and others (1997) have compared the O_3/H_2O_2 process to traditional ozonation in terms of removal of ammonia from synthetic wastewater. Studies were conducted using a stopped-flow spectro-photometer system operating at a temperature of 25 °C and aqueous solutions with pHs varying from 8 to 10. Study results indicated that O_3/H_2O_2 oxidation was mediated primarily by •OH oxidation of ammonia and that the O_3 depletion rate was not significantly influenced by the ammonia concentration. The researchers suggest that adding H_2O_2 to an ozonation process conducted at a pH of 11 or less would be economical for treating wastewaters containing high concentrations of ammonia.

Table 3-1. Summary of Contaminated Groundwater Treatment

PROCESS (SYSTEM)	CONTAMINANT CONCENTRATION	TEST CONDITIONS	RESULTS		COST (2000 U.S. dollars)	REFERENCE
			Percent Removal	Additional Information		
VOCs (Commercial Scale)						
Fenton (Geo-Cleanse®)	1,2-DCE: 860 µg/L PCE: 220 µg/L TCE: 2,100 µg/L	H_2O_2 (50%): 48,000 L H_2SO_4 (66%): 190 L H_3PO_4 (85%): 38 L $FeSO_4$: 17 kg Groundwater pH: 7 Groundwater alkalinity: unknown Injection time: 8 consecutive days Treatment time: 60 days	DCE: 40 PCE: 40 TCE: 40	In situ treatment of about 10,000 m^3 of groundwater in limestone bedrock aquifer at Letterkenny Army Depot, Chambersburg, Pennsylvania, U.S.A.	$170,000 (including equipment rental, reagent, mobilization, and labor costs)	Geo-Cleanse, 2000
	1,1,1-TCA: 280 mg/L (maximum)	H_2O_2 (50%): 7,600 L H_2SO_4 (66%): 110 L H_3PO_4 (85%): 38 L $FeSO_4$: 18 kg Groundwater pH: 6.5 Groundwater alkalinity: unknown Injection time: 7 days over 4 weeks Treatment time: 4 months	84	In situ treatment of about 640 m^3 of groundwater in shale bedrock aquifer at Letterkenny Army Depot, Chambersburg, Pennsylvania, U.S.A.	$230,000 (including equipment rental, reagent, mobilization, and labor costs)	
	TCE: 1,500 µg/L	H_2O_2 (50%): 38,000 L H_2SO_4 (66%): 170 L H_3PO_4 (85%): 57 L $FeSO_4$: 4.5 kg Groundwater pH: 6.2 Groundwater alkalinity: unknown Injection time: 10 days over 1.5 months Treatment time: 60 days	98	In situ treatment of about 62 m^3 of groundwater in sand aquifer at Pensacola Naval Air Station, Florida, U.S.A.	$160,000 (including equipment rental, reagent, mobilization, and labor costs)	
	1,2-DCE; PCE; TCE; and VC: 5,000 µg/L (average total)	H_2O_2 (50%): 46,000 L H_2SO_4 (66%): 450 L H_3PO_4 (85%): 110 L $FeSO_4$: 54 kg Groundwater pH: 6.0 Groundwater alkalinity: unknown Injection time: 18 consecutive days Treatment time: 60 days	89	In situ treatment of about 380 m^3 of groundwater in limestone bedrock aquifer at Kings Bay Naval Submarine Base, Georgia, U.S.A.	$210,000 (including equipment rental, reagent, mobilization, and labor costs)	

Table 3-1. Summary of Contaminated Groundwater Treatment (Continued)

PROCESS (SYSTEM)	CONTAMINANT CONCENTRATION	TEST CONDITIONS	RESULTS		COST (2000 U.S. dollars)	REFERENCE
			Percent Removal	Additional Information		
VOCs (Commercial Scale) (Continued)						
Fenton (Geo-Cleanse®)	2-Methylnaphthalene: 640 µg/L Naphthalene: 640 µg/L Benzene: 600 µg/L Toluene: 23 µg/L Ethylbenzene: 670 µg/L Xylene: 1,500 µg/L	H_2O_2 (50%): 9,500 L H_2SO_4 (66%): 83 L H_3PO_4 (85%): 8 L $FeSO_4$: 54 kg Groundwater pH: 6.0 Groundwater alkalinity: unknown Injection time: 4 consecutive days Treatment time: 6 days	2-Methylnaphthalene: 88 Naphthalene: 86 Benzene: 96 Toluene: 18 Ethylbenzene: 78 Xylene: 62	In situ treatment of about 350 m^3 of groundwater in sand aquifer at Wright Army Airfield, Fort Stewart, Georgia, U.S.A.	$75,000 (including equipment rental, reagent, mobilization, and labor costs)	Geo-Cleanse, 2000
	1,2-DCE: 930 µg/L PCE: 1,200 µg/L TCE: 600 µg/L VC: 17 µg/L	H_2O_2 (50%): 32,000 L H_2SO_4 (66%): 190 L H_3PO_4 (85%): 40 L $FeSO_4$: 45 kg Groundwater pH: 6.0 Groundwater alkalinity: unknown Injection time: 9 consecutive days Treatment time: 30 days	1,2-DCE: >99 PCE: >99 TCE: >99 VC: >99	In situ treatment of about 4,100 m^3 of groundwater in sand and clay aquifer under dry-cleaning facility in Houston, Texas, U.S.A.	$320,000 (including equipment rental, reagent, mobilization, and labor costs)	
Fenton (ISOTEC™)	MTBE and BTEX: > 54 mg/L (total)	Fenton's reagent: 13,000 L (breakdown unknown) Groundwater pH: about 7 Groundwater alkalinity: unknown Injection time: 16 days over 7 months	>99	In situ treatment of groundwater in silty sand aquifer beneath warehouse facility in northern New Jersey, U.S.A.; volume of groundwater treated is unknown All treatment goals met; site was issued no further action letter by New Jersey Department of Environmental Protection 4 months after final round of injection activities	$110,000 (no breakdown of cost available)	ISOTEC, 2000

Table 3-1. Summary of Contaminated Groundwater Treatment (Continued)

PROCESS (SYSTEM)	CONTAMINANT CONCENTRATION	TEST CONDITIONS	RESULTS		COST (2000 U.S. dollars)	REFERENCE
			Percent Removal	Additional Information		
VOCs (Commercial Scale) (Continued)						
Fenton (ISOTEC™)	1,2-DCE; PCE; and TCE: > 150 mg/L (total)	Fenton's reagent: 58,000 L (breakdown unknown) Groundwater pH: about 7 Groundwater alkalinity: unknown Injection time: 32 days over 6 months	>99	In situ treatment of groundwater in fine-grained, sandy silt aquifer beneath manufacturing facility in northern New Jersey, U.S.A.; volume of groundwater treated is unknown	$180,000 (no breakdown of cost available)	ISOTEC, 2000
Hydrodynamic Cavitation (OSI HYDROX)	2-Methylnaphthalene: 260 mg/L Naphthalene: 340 mg/L	Flow rate: 7,600 L/min Reactor volume: unknown Power input: 41 kW Influent pH: unknown Influent alkalinity: unknown Treatment time: 9 hours Retention time: unknown	2-Methylnaphthalene: 78 Naphthalene: 75	Ex situ treatment of water collected from well operated by utility company in Visalia, California, U.S.A.; volume of groundwater treated is unknown	$200,000 (including capital cost and O&M cost of $0.65/m^3 of water treated)	OSI, 2000

Table 3-1. Summary of Contaminated Groundwater Treatment (Continued)

PROCESS (SYSTEM)	CONTAMINANT CONCENTRATION	TEST CONDITIONS	RESULTS		COST (2000 U.S. dollars)	REFERENCE
			Percent Removal	Additional Information		
VOCs (Commercial Scale) (Continued)						
E-beam (HVEA)	Raw Groundwater (Run 3) 1,2-DCE: 40 to 43 µg/L PCE: 9,200 to 12,000 µg/L TCE: 25,000 to 30,000 µg/L Spiked Groundwater (Run 13) Carbon tetrachloride: 150 to 400 µg/L Chloroform: 240 to 650 µg/L 1,2-DCA: 210 to 840 µg/L 1,2-DCE: <40 to 45 µg/L PCE: 9,200 to 14,000 µg/L 1,1,1-TCA: 200 to 500 µg/L TCE: 25,000 to 37,000 µg/L Benzene: 220 to 550 µg/L Toluene: 170 to 360 µg/L Ethylbenzene: 95 to 250 µg/L Xylene: 85 to 200 µg/L	Run 3 Flow rate: 150 L/min Beam current: 42 mA Beam power: 21 kW Influent pH: unknown Influent alkalinity: <5 mg/L as $CaCO_3$ Run 13 Flow rate: 76 L/min Beam current: 42 mA Beam power: 21 kW Influent pH: 7.6 Influent alkalinity: 500 mg/L as $CaCO_3$	Run 3 1,2-DCE: >90 PCE: 96 TCE: 97 Run 13 Carbon tetrachloride: >98 Chloroform: 80 1,2-DCA: 57 1,2-DCE: >91 PCE: 99 1,1,1-TCA: 81 TCE: 99 BTEX: >98	Ex situ treatment of groundwater at M-area, U.S. Department of Energy Savannah River Site, Aiken, South Carolina, U.S.A. E-beam treatment increased groundwater acute toxicity for fathead minnows but not for water fleas Liquid-phase by-products: aldehydes and haloacetic acids Air-phase by-products: CO; HCl; nitrous oxide; O_3; phosgene	Case 1 $1.21/m^3 of water treated (assuming removal of unsaturated VOCs using a system with a beam power of 21 kW operating at 150 L/min for 15 years) Case 2 $1.77/m^3 of water treated (assuming removal of unsaturated, saturated, and aromatic VOCs using a system with a beam power of 21 kW operating at 76 L/min for 30 years) Both cost estimates include treatability study and system design, mobilization and startup, and one-time system capital, labor, utility, equipment maintenance, residual waste shipping, and site demobilization costs	Alvarez and others, 1998; Topudurti and others, 1998
	MTBE: 170 µg/L	Flow rate: unknown Absorbed dose: 250 and 500 krads Beam power: 20 kW Influent pH: 7.7 to 8.8 Influent alkalinity: unknown Retention time: unknown	92 at 250 krads 99 at 500 krads	Ex situ treatment of MTBE-contaminated groundwater; volume of groundwater treated is unknown By-products: tert-butyl alcohol and tert-butyl formate	Unknown	Cooper and others, 2000

Table 3-1. Summary of Contaminated Groundwater Treatment (Continued)

PROCESS (SYSTEM)	CONTAMINANT CONCENTRATION	TEST CONDITIONS	RESULTS		COST (2000 U.S. dollars)	REFERENCE
			Percent Removal	Additional Information		
VOCs (Pilot Scale)						
O_3/H_2O_2	PCE: 3.2 mg/L TCE: 0.17 mg/L	Flow rate: 900 L/min Reactor volume: unknown O_3 dose: 1 to 2 mg/L H_2O_2 dose: 0.5 to 1 mg/L Influent pH: unknown Influent alkalinity: unknown Retention time: 15 to 20 minutes	PCE: 91 TCE: >99	Ex situ treatment of groundwater in a semiconductor manufacturing facility treatment system, Essex Junction, Vermont, U.S.A.; volume of groundwater treated is unknown	$11,000 (no breakdown of cost available)	Clancy and others, 1996
O_3/H_2O_2	PCE: 12 µg/L TCE: 100 µg/L	Flow rate: 0.25 L/s Reactor volume: 40 L O_3 dose: 9.5 mg/L H_2O_2 dose: 3 mg/L Influent pH: unknown Influent alkalinity: unknown Retention time: 15 minutes	PCE: 88 TCE: 99	Ex situ treatment of groundwater from drinking water source well owned and operated by Los Angeles Department of Water and Power, North Hollywood, California, U.S.A.; volume of groundwater treated is unknown.	$38/L of water treated based on 7,570-L volume (including capital, O&M, and granular activated carbon replacement costs)	Aieta and others, 1988
SVOCs (Commercial Scale)						
Fenton (Geo-Cleanse®)	M/V-4 Total PAHs: 630 µg/L M/V-5 Total PAHs: 400 µg/L	H_2O_2 (50%): 30,000 L H_2SO_4 (66%): 570 L H_3PO_4 (85%): 45 L $FeSO_4$: 23 kg Groundwater pH: 7.0 Groundwater alkalinity: unknown Injection time: 8 consecutive days Treatment time: Unknown	M/V-4 99 M/V-5 90	In situ treatment of about 100 m^3 of groundwater collected from two monitoring wells at manufactured gas plant in Burlington, Wisconsin, U.S.A.	$130,000 (including equipment rental, reagent, mobilization, and labor costs)	Geo-Cleanse, 2000
Hydrodynamic Cavitation (OSI HYDROX)	Acenaphthene: 300 mg/L Anthracene: 21 mg/L Benzo(a)anthracene: 24 mg/L Chrysene: 20 mg/L Fluoranthene: 100 mg/L Fluorene: 120 mg/L Phenanthrene: 250 mg/L Pyrene: 160 mg/L	Flow rate: 7,600 L/min Reactor volume: unknown Power input: 41 kW Influent pH: unknown Influent alkalinity: unknown Treatment time: 9 hours Retention time: unknown	Acenaphthene: 92 Anthracene: >99 Benzo(a)anthracene: >99 Chrysene: >99 Fluoranthene: 70 Fluorene: 91 Phenanthrene: 55 Pyrene: 83	Ex situ treatment water collected from well operated by utility company in Visalia, California, U.S.A.; volume of groundwater treated is unknown	$200,000 (including capital cost and O&M cost of $0.65/$m^3$ of water treated)	Pisani and others, 1997; OSI, 2000

Table 3-1. Summary of Contaminated Groundwater Treatment (Continued)

PROCESS (SYSTEM)	CONTAMINANT CONCENTRATION	TEST CONDITIONS	RESULTS		COST (2000 U.S. dollars)	REFERENCE
			Percent Removal	Additional Information		
SVOCs (Pilot Scale)						
SCWO	Acetic acid: 4,300 mg/L n-Octanol: 660 mg/L Phenol: 290 mg/L	Flow rate: 0.75 to 1.9 L/min Temperature: 420 to 440 °C Pressure: 25 MPa Influent pH: unknown Influent alkalinity: unknown Retention time: 4.4 to 720 seconds	Acetic acid: >92 (90 seconds retention time) n-Octanol: >99 (85 seconds retention time) Phenol: >98 (11 seconds retention time)	Ex situ treatment; volume of groundwater treated is unknown	Unknown	Li and others, 1994
PCBs (Commercial Scale)						
Hydrodynamic Cavitation (OSI HYDROX)	PCBs: 3 mg/L	Flow rate: 230 L/min Reactor volume: unknown Power input: 7 kW Influent pH: 8.2 Influent alkalinity: unknown Treatment time: 8 hours Retention time: unknown	>99	Ex situ treatment; volume of groundwater treated is unknown	$65,000 (including capital cost and O&M cost of $0.07/m^3 of water treated)	OSI, 2000
Dioxins and Furans (Commercial Scale)						
Hydrodynamic Cavitation (OSI HYDROX)	Dibenzofuran: 110 mg/L	Flow rate: 7,600 L/min Reactor volume: unknown Power input: 41 kW Influent pH: unknown Influent alkalinity: unknown Treatment time: 9 hours Retention time: unknown	91	Ex situ treatment of water collected from well operated by utility company in Visalia, California, U.S.A.; volume of groundwater treated is unknown	$200,000 (including capital cost and O&M cost of $0.65/m^3 of water treated)	Pisani and others, 1997; OSI, 2000
Explosives and Their Degradation Products (Commercial Scale)						
Fenton (Geo-Cleanse®)	HMX, RDX, and TNT: 140 µg/L (total)	H_2O_2 (50%): 6,800 L H_2SO_4 (66%): 76 L H_3PO_4 (85%): 15 L $FeSO_4$: 23 kg Groundwater pH: unknown Groundwater alkalinity: unknown Injection time: 3 consecutive days Treatment time: 60 days	80	In situ treatment of about 1,100 m^3 of groundwater in sand aquifer at Milan Army Ammunition Plant, Tennessee, U.S.A. By-product: nitrates	$97,000 (including equipment rental, reagent, mobilization, and labor costs)	Geo-Cleanse, 2000

Table 3-1. Summary of Contaminated Groundwater Treatment (Continued)

PROCESS (SYSTEM)	CONTAMINANT CONCENTRATION	TEST CONDITIONS	RESULTS		COST (2000 U.S. dollars)	REFERENCE
			Percent Removal	Additional Information		
Explosives and Their Degradation Products (Commercial Scale) (Continued)						
SCWO (General Atomics)	CYH propellant containing HMX: initial concentrations unknown	Flow rate: 1.1 to 1.7 L/min Temperature: 450 to 580 °C Pressure: 28 MPa Influent pH: unknown Influent alkalinity: unknown Retention time: 33 seconds	TOC: >99 (at 575 °C)	Ex situ treatment of 315 kg of propellant at Thiokol site near Brigham City, Utah, U.S.A.	Unknown	Spritzer and others, 1995
E-beam (HVEA)	DMMP: 47 mg/L for 3 Mrad dose study; 62 mg/L for 2-Mrad dose study	Flow rate: 400 L/min Dose: 3 Mrads (at pH 4) and 2 Mrads (at pH 9) Influent alkalinity: unknown Retention time: 2 hours	89 at 3 Mrads 74 at 2 Mrads	Ex situ treatment of 4,000 L of groundwater Liquid phase by-products: diphosphoric acid, methane, and phosphate ion	Unknown	Nickelsen and others, 1998
Humic Substances (Pilot Scale)						
O_3/H_2O_2	Huntington Beach Water Department Color: 22 c.u. Mesa Consolidated Water District Color (from redwood chips): 65 c.u.	Huntington Beach Water Department Well Flow rate: 76 L/min O_3 dose: 6.5 mg/L H_2O_2 dose: 3.3 mg/L Influent pH: unknown Influent alkalinity: unknown Retention time: 13 minutes Mesa Consolidated Water District Well Flow rate: 12,000 L/min O_3 dose: 7 mg/L H_2O_2 dose: 2.5 mg/L Influent pH: unknown Influent alkalinity: unknown Retention time: 16 minutes	Huntington Beach Water Department Well >90 Mesa Consolidated Water District Well 85	Ex situ treatment of groundwater at Mesa Consolidated Water District and Huntington Beach Water Department, Orange County, California, U.S.A.; volume of groundwater treated is unknown	Unknown	Tan and others, 1990

3.2 Industrial Wastewater Treatment

The effectiveness of ANPO processes in treating industrial wastewater has been evaluated for various contaminant groups, including SVOCs, dyes, inorganics, and COD. This section discusses ANPO process effectiveness with regard to each of these contaminant groups. The operating conditions and performance results for each commercial- and pilot-scale application discussed in Section 3.2 are summarized in Table 3-2 at the end of the section.

3.2.1 SVOC-Contaminated Industrial Wastewater

This section discusses industrial wastewater treatment for SVOCs using the SCWO process at the pilot-scale level and the O_3/H_2O_2, SCWO, and acoustic cavitation processes at the bench-scale level.

Pilot-Scale Application

NORAM Engineering and Constructors Limited (NORAM) used a pilot-scale SCWO reactor to treat nitrophenolates in real and synthetic industrial wastewaters. The NORAM pilot plant is located at the University of British Columbia in Vancouver, British Columbia, Canada. The system can operate at a flow rate of 0.5 to 2 L/min and can accommodate temperatures up to 600 °C. The SCWO reactor is tubular; is 120 m in length; has an inside diameter of 0.62 cm; and has a volume of 3.5 L. Nitrophenolates were present in the wastewater at 10,000 mg/L. Treatment tests were conducted on about 200 L of wastewater at a flow rate of 1 L/min. The retention time in the reactor was 10 to 60 seconds. Treatment resulted in >99 percent removal of nitrophenolates (NORAM, 2000; Rehmat and others, 2000).

Bench-Scale Studies

This section summarizes information on removal of the following SVOCs from actual and simulated industrial wastewaters using the O_3/H_2O_2, SCWO, and acoustic cavitation processes at the bench-scale level.

ANPO Process	SVOCs Removed
• O_3/H_2O_2	• 5-Chloro-2-nitroaniline; thiophenol
• SCWO	• Acetic acid; 2,4-DCP; 2,4-dichlorophenoxyacetic acid methyl ester; pentachlorophenol (PCP); pyridine
• Acoustic cavitation	• Porphyrin

O_3/H_2O_2

The O_3/H_2O_2 process was used to remove 5-chloro-2-nitroaniline and thiophenol from industrial and synthetic wastewaters. About 200 mL of solution was treated at a pH range of 1 to 13. Effective oxidation of thiophenol and elimination of its odor were achieved when H_2O_2 (0.25 M) was added before ozonation. However, complete discoloring of 5-chloro-2-nitroaniline solution occurred when H_2O_2 was continuously fed to the ozonated wastewater at a 0.25 molar ratio of H_2O_2 to O_3 (Wiktorowski and others, 1991).

SCWO

Lin and others (1998b) have studied the degradation of 2,4-DCP in supercritical water. Experiments were conducted in a high-pressure batch reactor (20 mL) and in an isothermal, isobaric flow reactor (15 mL). Several by-products, including 2,7-dichloro-dibenzo-dioxin and trichlorophenols, were generated by SCWO of 2,4-DCP at 400 °C and 25 MPa. According to the researchers, removal of chlorine species from 2,4-DCP by sodium or Fe(III) ions in supercritical water may suppress formation of dioxin by-products and enhance contaminant degradation. Corrosive iron and nickel were present in the effluent from a Stainless Steel 316 reactor. The corrosion rate was suppressed by about three orders of magnitude in a quartz-lined reactor.

The U.S. EPA Office of Research and Development funded a 5-year project to develop kinetic models and reaction pathways for SCWO of selected priority pollutants, namely acetic acid; 2,4-DCP; 2,4-dichlorophenoxyacetic acid methyl ester; PCP; and pyridine. As discussed below, the project consisted of batch and continuous-flow studies, corrosion studies, and chromium speciation and separation studies (Gloyna and Li, 1993).

Batch and continuous-flow studies showed that refractory and chlorinated organic compounds were effectively destroyed by the SCWO process. For a given temperature, the highest corrosion rate

occurred at the lowest pH within the test conditions; the pH ranged from 2.1 to 8.6. For a given pH, higher corrosion rates were observed at 300 and 500 °C as compared to 400 °C. Chromium species, especially hexavalent chromium, precipitated effectively because of the limited solubility of chromate salts in supercritical water.

The researchers recommend that selection of reactor materials be based on the anticipated chloride concentration and pH of the waste to be treated. For a waste with low chloride concentrations and a neutral pH, Stainless Steel 316 may be used as an SCWO reactor material. If higher chloride concentrations are present, a nickel-chrome alloy such as Hastelloy C-276 is recommended. Monel 400 was not acceptable as a possible SCWO reactor material because of selective leaching.

Finally, the chromium speciation and separation study showed that the pH of the effluent was an important factor in determining the oxidation state of chromium corrosion. At a pH below 7, trivalent chromium was the only chromium corrosion species generated. At a pH above 7, both trivalent and hexavalent chromium corrosion species were generated. The removal of hexavalent chromium was temperature-dependent. Greater amounts of chromate salts were removed at higher temperatures (Gloyna and Li, 1993).

Acoustic Cavitation

Yasuda and others (1999) have examined the effect of mixing on porphyrin decomposition by acoustic cavitation at a frequency of 23 kHz. The rotation speed of the stirrer or the liquid recirculation flow rate was varied in the batch reactor. Decomposition was observed to increase with increased mixing. In addition, increased sonoluminescence of the reaction mixture was observed, indicating that a greater number of cavities were being formed.

3.2.2 Dye-Contaminated Industrial Wastewater

Dyes have been removed from industrial wastewater using the Fenton, electrochemical oxidation, and E-beam processes in pilot-scale applications. The Fenton, O_3/H_2O_2, SCWO, acoustic cavitation, and E-beam processes have also been used to treat dye-contaminated water in bench-scale studies. This section describes these applications and studies.

Pilot-Scale Applications

This section discusses removal of the following dyes from industrial wastewater at the pilot-scale level using the Fenton, electrochemical oxidation, and E-beam processes.

ANPO Process	Dyes Removed
• Fenton	• Ming Jade; Navy 106; unidentified azo-red dye; unidentified orange dye
• Electrochemical oxidation	• Unidentified dyes
• E-beam	• Reactive Red 120

Fenton

A pilot-scale Fenton system was installed at a textile mill in Martinsville, Virginia, U.S.A., to pretreat a concentrated jet-dye wastewater stream by removing color and dissolved organic carbon (DOC). The three primary dyes present in the wastewater were a phthalocyanine-based dye called Ming Jade (110,000 American Dye Manufacturers Institute [ADMI] c.u.), Navy 106 (48,000 ADMI c.u.), and an unidentified azo-red dye (60,000 ADMI c.u.). In the pilot system, the jet-dye wastewater was pumped into a 210-L feed tank, where the pH was adjusted to 3. The solution was stirred and heated to 65 °C. H_2O_2 and Fe(II) were added to the solution at concentrations of 6,000 and 300 mg/L, respectively. The flow rate of the pilot system was 1.1 L/min. After about 120 minutes, the reduction in color and DOC for the three dyes was as follows: for Ming Jade, 99 and 19 percent, respectively; for Navy 106, 98 and 3 percent, respectively; and for the azo-red dye, 90 and 19 percent, respectively. The estimated costs of the reagents associated with removal of Ming Jade, Navy 106, and the azo-red dye were \$2.30/m^3, \$2.10/m^3, and \$2.20/m^3 of wastewater treated, respectively (Price and others, 1994).

Françoisse and Gregor (1996) describe a pilot-scale application of a modified Fenton process (the FSR Process®) to remove COD and TOC from orange dye-contaminated wastewater. The FSR Process® differed from the traditional Fenton process in that the sludge was recycled. At the end of Fenton treatment, the sludge was separated, concentrated, dissolved, and electrochemically reduced to form Fe(II) salts that could be reused. COD and TOC were initially present in the colored wastewater at 3,400 and 850 mg/L, respectively. The pH of the

wastewater was 12. Concentrated (96 percent) H_2SO_4 was used to adjust the pH and dissolve the sludge. After wastewater treatment in the FSR Process® pilot plant, COD and TOC concentrations were reduced by 82 percent, and toxicity was sufficiently reduced to allow activated sludge treatment as the final process. The estimated cost of a full-scale, 250-L/min plant is $2,900,000/year, which includes raw material, maintenance, labor, and electricity costs.

Electrochemical Oxidation

In a pilot study, the electrochemical oxidation process was applied to effluent from the dyeing and finishing process of a textile mill in Thrace, Greece. The laboratory pilot plant consisted of an electrolytic cell, recirculation reactor, wastewater feed system, and cooling system. Titanium/platinum was used for the anode and Stainless Steel 304 was used for the cathode. The electrodes were operated at 20 volts direct current and 50 A. The recirculation reactor included a 5-L vessel and a peristaltic pump that recirculated the wastewater at a 10-L/min flow rate. The cooling system maintained the temperature of the wastewater at 42 °C. The wastewater contained 5-day biochemical oxygen demand (BOD) (450 mg/L), COD (1,200 mg/L), color (3,400 ADMI c.u.), and total Kjeldahl nitrogen (TKN) (34 mg/L). The temperature and pH were maintained at 42 °C and 10, respectively. Addition of greater initial amounts of 1 percent sodium chloride and 36 percent HCl resulted in greater COD and color removal. The COD concentration was reduced by 93 percent after 40 minutes of treatment at a current density of 890 mA/cm^2 using 2 mL each of 1 percent sodium chloride and 36 percent HCl. In addition, the ADMI c.u., the 5-day BOD concentration, and the TKN concentration were reduced by 96, 92, and >99 percent, respectively (Vlyssides and Israilides, 1998).

E-Beam

The E-beam process was used at the pilot scale to treat synthetic wastewater containing Reactive Red 120. Experiments were conducted in the Miami Electron Beam Research Facility at the Miami-Dade Central Wastewater Treatment Plant in Florida, U.S.A. The treatment system had a horizontal, 1.5-MeV electron accelerator capable of delivering 0 to 50 mA of E-beam current. The absorbed radiation doses were designed to reach as high as 800 Mrads at a flow rate of 450 L/min. The E-beam was scanned at 160 by 60 hertz to cover a 1,200-cm-wide by 5-cm-thick waste stream. Reactive Red 120 was present in the wastewater at 50 mg/L. Influent pH was adjusted to 5. At an irradiation dose of 450 Mrads, color was removed by >95 percent. The study also showed that addition of Fe(II) did not improve decolorization efficiency and in some cases decreased the removal efficiency to some extent. Increasing the irradiation dose increased color removal (Kurucz and others, 1998).

Bench-Scale Studies

This section summarizes information on removal of the following dyes from actual and simulated industrial wastewaters at the bench-scale level using the Fenton, O_3/H_2O_2, SCWO, acoustic cavitation, and E-beam processes.

ANPO Process	Dyes Removed
• Fenton	• Acid Blue 264; Acid Red 337; Acid Yellow 222; Active Yellow Lightfast 2 KT; 1-amino-8-naphthol-3,6-disulfonic acid (DSD); Basic Blue 3; Basic Red 18:1; Basic Violet 7; Basilen Red EB; 4,4'-diaminostilbene-2,2'-disulfonic acid; Direct Black 112; Direct Blue 86; Direct Blue G; Direct Violet 47; Disperse Blue 139; Disperse Red 60; Dispersol Black D-2B; Erioglaucine; Levafix Red 4BA; Procion Navy HEXL; Reactive Black B; Reactive Blue 15; Reactive Blue 71; Reactive Blue 172; Reactive Red 141; Remazol Black B; unidentified dyes
• O_3/H_2O_2	• Acid Black 52; Direct Blue 80
• SCWO	• Unidentified dyes
• Acoustic cavitation	• Remazol Black B (or Reactive Black 5)
• E-beam	• Acid Red 265

Fenton

Reactive dye wastewater containing Basilen Red EB (70 mg/L; 1,800 platinum/cobalt [Pt/Co] c.u.), Levafix Red 4BA (62 percent; 4,000 Pt/Co c.u.), Procion

Navy HEXL (70 mg/L; 1,300 Pt/Co c.u.), and Remazol Black B (60 percent; 1,800 Pt/Co c.u.) was treated using the Fenton process. Fe(II) and 30 percent H_2O_2 were used in all the experiments. The pH of the solution was adjusted to between 4 and 5 using acetic acid. Color reduction of >50 percent was observed to occur instantaneously. Fenton treatment of individual dyes resulted in reduction of Basilen Red EB Pt/Co c.u. by 93 percent, Levafix Red 4BA Pt/Co c.u. by 95 percent, Procion Navy HEXL Pt/Co c.u. by 92 percent, and Remazol Black B Pt/Co c.u. by 75 percent. The corresponding Fe(II):H_2O_2 mass ratios for each of the treatments were 0.05, 0.2, 0.05, and 0.2, respectively. It was observed that darker colors required higher Fe(II):H_2O_2 mass ratios than lighter colors. The treated solution was found to be nontoxic. The study showed that an Fe(II):H_2O_2 mass ratio of 0.25 was optimal to achieve dye removal with the least amount of sludge generation. Under the assumption that settled iron sludge would be reused in the Fenton process, the material cost of the treatment was estimated at about \$0.23/m^3 of wastewater treated (Lev and Deshpande, 1996).

Lin and Chen (1997) have evaluated the effectiveness of the Fenton process in treating effluent from the secondary wastewater treatment plant of a dyeing and finishing mill in northern Taiwan. The treatment process consisted of the Fenton process, chemical coagulation, and an ion exchange process. The Fenton reaction took place over 2 hours. A reaction temperature of 30 to 40 °C was determined to be optimal. The study showed that an Fe(II):H_2O_2 mass ratio of 0.75 yielded good results for COD and color removal. A large number of small flocs generated in the Fenton process were removed by chemical coagulation using 50 mg/L of powdered activated carbon and 1 mg/L of polymer. At the end of the three-step treatment process, the COD concentration (initially 130 mg/L) was reduced by 93 percent. Similarly, color was >99 percent removed, and turbidity was reduced by 95 percent.

Five types of simulated dye wastewater were treated with Fenton's reagent. The wastewaters contained the following dyes: (1) Reactive Blue 71, Blue 172, and Red 141; (2) Dispersol Black D-2B, Disperse Blue 139, and Disperse Red 60; (3) Direct Black 112, Blue 86, and Violet 47; (4) Basic Blue 3, Red 18:1, and Violet 7; and (5) Acid Blue 264, Red 337, and Yellow 222. The dyes, which were prepared in equal concentrations of 300 mg/L, were mixed in equal dye:Fe(II):H_2O_2 proportions of 1:1:1. The treatment results showed that the best pH value for decolorization was below 3.5. The most effective amount of H_2O_2 was determined to be 580 mg/L for reactive dyes; 880 mg/L for acid dyes; and 290 mg/L for disperse, direct, and basic dyes. Higher $FeSO_4$ doses resulted in better treatment. Lower temperatures correlated with longer decolorization times. Under optimal conditions, the average percent removal of COD was about 90, the transparency of the wastewater was above 25 cm, and the average percent decolorization was above 97 (Kuo, 1992).

Jank and others (1998) have studied Fenton treatment of synthetic wastewater containing erioglaucine, a widely used blue acid aminotriphenylmethane dye. The dye was prepared in deionized water at 2,000 mg/L. Reagents used included H_2SO_4, H_2O_2, iron sulfate, and activated carbon with a specific surface area of 1,000 square meters per gram, which was used as a catalyst for activation of the H_2O_2. The reaction was optimal at a pH of 3. Decolorization was achieved within 24 hours at a pH of 3 and at a temperature between 20 and 40 °C.

The Fenton process was used in batch studies to remove COD in and decolorize simulated desizing wastewater containing 100 mg/L each of 0.2 percent polyvinyl alcohol (160 mg/L of COD), Direct Blue G (71 mg/L of COD), and Reactive Black B (100 mg/L of COD). The pH was adjusted to between 2 and 5 before the Fenton reaction, and the treatment time was about 1 hour. The study showed that the Fenton reaction was optimal at a pH of 3 and a temperature of 30 °C (Lin and Lo, 1997).

A pretreatment process involving Fenton's reagent and coagulation has been studied by Zhu and others (1996). Wastewater containing 1-amino-8-naphthol-3,6-disulfonic acid was treated in batch reactors for 1 hour using H_2O_2 and $FeSO_4$. COD removal was greatest under acidic conditions (a pH of 2 to 4). At a pH above 8, Fe(II) ions begin to form floc and precipitate. The optimal Fe(II) dose was 3.6 mM. The Fenton process improved the effects of coagulation. When the concentration of Fe(II) was 3.60 mM, the concentration of H_2O_2 was 0.088 M, and the ferric chloride dose of two-stage coagulation treatment was 0.092 and 0.03 M, the overall COD removal was at least 90 percent.

Yu and others (1998) have investigated pretreatment and biodegradability enhancement of DSD-acid manufacturing wastewater using the Fenton process. The wastewater, which was taken from a typical chemical plant in China, contained 22,000 mg/L of COD and 2.2 x 10^5 c.u. of multiple dyes. Under optimal conditions, that is, with addition of 150 mg/L of Fe(II) and 2,000 mg/L of H_2O_2 followed by

two-stage coagulation of 5,000 and 2,000 mg/L ferric chloride—about 90 percent of the COD and 95 percent of the color were removed in 1 hour of treatment. The Fenton process was observed to improve wastewater biodegradability because of the conversion of nonbiodegradable organic compounds to more biodegradable substances.

The Fenton process was used to treat wastewater containing an azo dye called Active Yellow Lightfast 2 KT. Initial dye concentrations varied from 20 to 160 mg/L. $FeSO_4$ was present at 14 mg/L, and the pH was 3. At a dose of 17 mg/L of H_2O_2, color was 95 to 97 percent removed. An increase in reaction temperature increased the color removal efficiency (Solozhenko and others, 1995).

Flaherty and Huang (1992) have evaluated Fenton treatment of refractory textile wastewater that primarily contained Reactive Blue 15 dye. The raw wastewater had a pH of 12; an alkalinity of 21,000 mg/L as $CaCO_3$; a COD concentration of 2,100 mg/L; and a total copper concentration of 14 mg/L. The Fe(II) concentration was maintained at 2×10^{-2} M, and the pH of the influent was adjusted to 3.5. In continuous-flow experiments, the reaction took place in a 1-L, continuously stirred tank reactor for about 2 hours. About 70 percent of the COD was removed from the wastewater. After a 24-hr settling period, the total copper concentration in the supernatant had decreased to <1 mg/L, which corresponds to 93 percent removal.

O_3/H_2O_2

Adams and others (1995) have evaluated O_3/H_2O_2 treatment of two metal-complex azo dyes, Acid Black 52 and Direct Blue 80, which contain chromium and copper, respectively. The initial dye solutions contained 340 mg/L of Acid Black 52 and 260 mg/L of Direct Blue 80. The temperature in the semi-batch reactor was maintained at 20 °C. An H_2O_2:O_3 molar ratio of 0.5 was used. The study showed that inorganic copper was readily released during the decolorization of Direct Blue 80, potentially affecting the toxicity of treated wastewater associated with this dye. The decolorization of Acid Black 52, however, did not result in appreciable chromium in the treated wastewater.

SCWO

Four colored spotting dyes from the U.S. military stockpile were treated in a SCWO tubular reactor at Sandia National Laboratories in Livermore, California, U.S.A. The reactor is made of Inconel 625 and consists of two sections. The first section is 260 cm long and is equipped with heaters capable of adding power at a rate of 17 watts per centimeter. The second section is 490 cm long, is powered at a rate of 5.4 watts per centimeter, and is maintained under isothermal conditions. At temperatures above 550 °C, the dyes and partial oxidation products were destroyed in <10 seconds with a removal efficiency of >91 percent based on TOC. Formation of sulfate salt deposits within the flow reactor and corrosion of the construction materials emerged as issues for further research. Specifically, "sticky" salts that adhered to the walls of the reactor plugged the system and caused a rise in pressure. Corrosion in the reactor resulted in chromium and nickel concentrations in the effluent (Lajeunesse and Rice, 1995).

Acoustic Cavitation

Vinodgopal and others (1998) discuss the removal of a reactive textile azo dye, Remazol Black B (or Reactive Black 5), from an aqueous solution using acoustic cavitation at a frequency of 640 kHz and an output power of 240 W. The solution was constantly bubbled with a stream of O_2 gas. The absorbance measurement in the visible range of light showed that after 90 minutes, the dye was no longer present in the sample. The TOC measurements showed that treatment for 6 hours resulted in about 60 percent mineralization of the dye. By-products of the reaction included oxalate, nitrate, and sulfate ions.

E-Beam

Water containing the azo dye Acid Red 265 was treated by E-beam oxidation. Experiments were performed at ambient temperature and at initial dye concentrations ranging from 50 to 400 mg/L. The flow rate was varied between 1.5 and 10 L/min, mean E-beam dose rates ranged from 0.4 to 160 Mrads per second, and beam currents ranged from 1 to 3 mA. Under oxygenated conditions, 95 percent decolorization was achieved using 0.2-Mrad irradiation and an initial dye concentration of 100 mg/L (Kawakami and others, 1978).

3.2.3 Inorganic-Contaminated Industrial Wastewater

This section discusses treatment of inorganic-contaminated industrial wastewater using the SCWO process at the commercial scale. Information is also included on inorganic-contaminated industrial wastewater treatment using the electrochemical oxidation and acoustic cavitation processes at the bench-scale level.

Commercial-Scale Application

In 1994, the Chematur Aqua Critox® SCWO treatment system was installed at the Huntsman Corporation facility in Austin, Texas, U.S.A. The SCWO system contains a positive-displacement pump that pressurizes the wastewater feed stream to between 25 and 28 MPa, a double-pipe heat exchanger that channels the feed stream into a process heater, a heat exchange shell, a heat recovery boiler, and an effluent cooler. The feed stream temperature at the exit point of the process heater ranges from 360 to 380 °C. When O_2 is added to the heated feed stream, temperatures within the reactor rise to 530 to 650 °C. After the solution passes through the effluent cooler, a control valve lowers the pressure to atmospheric pressure, and a liquid-gas separator separates the effluent into liquid and gas phases. The reactor is made of a high-grade alloy to prevent stress corrosion resulting from chlorides in the feed stream.

A 48-hour demonstration run of the Aqua Critox® system was conducted in May 1994. The 19-L/min system treated facility process and washdown water containing 6,900 mg/L of ammonia and 50,000 mg/L of TOC among other constituents. The system achieved >99 percent removal of ammonia during the demonstration. A study of air emissions revealed no problems with nitrogen oxide (NO_x) or sulfur oxide (SO_x) emissions. The total regulated exhaust emissions from the process were <260 kg/year, about 7.2 percent of the quantity allowed under Texas' air permit exemption requirements. No costs have been reported for the demonstration run (Griffith, 1995).

Bench-Scale Studies

This section summarizes the results of bench-scale studies of the effectiveness of the electrochemical oxidation and acoustic cavitation processes in removing the following inorganics from industrial wastewater.

ANPO Process	Inorganics Removed
• Electrochemical oxidation	• Ammonium; cyanide
• Acoustic cavitation	• Hydrogen sulfide

Electrochemical Oxidation

Using electrochemical oxidation, Chiang and others (1995a) achieved almost complete removal of ammonium and 90 percent removal of COD in 2 hours while treating coke plant wastewater from a steel manufacturing company. Electrolysis took place on a lead dioxide-coated titanium anode. Ammonium and COD were present in the wastewater at initial concentrations of 760 and 2,100 mg/L, respectively. The pH of the wastewater ranged from 6.9 to 7.5, and the temperature ranged from 50 to 65 °C. The effect of various anode materials was tested using graphite, binary rubidium-TiO_2-coated titanium, tertiary tin-lead-rubidium oxide-coated titanium, and lead oxide/titanium. Graphite, rubidium-TiO_2-coated titanium, and tin-lead-rubidium oxide-coated titanium were not found to be suitable anode materials for electrolysis of coke plant wastewater because of their poor stability and performance. Lead oxide/titanium provided the best removals as an anode material. The current efficiency improved with increasing current density and chloride dose. In addition, ammonium and COD removals improved at pHs above 7.

A bipolar trickle tower electrochemical reactor consisting of graphite Raschig rings was evaluated in terms of its removal of cyanide from wastewater effluent. During continuous reactor operation, cyanide concentrations were reduced from 1,500 to <60 mg/L (>96 percent removal) and from 1,000 to <30 mg/L (>97 percent removal) with an energy consumption of 18 to 27 kilowatt-hours per kilogram of cyanide removed. At an initial cyanide concentration of 300 mg/L, complete removal of cyanide was achieved with an energy consumption of 78 kilowatt-hours per kilogram of cyanide removed. The rate of removal decreased as the cyanide concentration decreased with time. Although the initial pH of the raw water was 11, the pH of the treated water was between 8 and 9, indicating that pH may not have to be adjusted before additional treatment by conventional processes (Öğütveren and others, 1999).

Acoustic Cavitation

Kotronarou and others (1992b) have studied oxidation of hydrogen sulfide by acoustic cavitation at a frequency of 20 kHz. The ultrasonic intensity was about 75 W/cm^2, which corresponds to a power input of about 85 W. The temperature inside the batch reactor used was maintained at 25 °C. At a pH of 10, treatment by-products included sulfate, sulfite, and thiosulfate.

3.2.4 High-COD Industrial Wastewater

This section discusses COD removal from industrial wastewater using the Fenton and O_3/H_2O_2 processes at the bench scale. Removal of TOC is also discussed.

Fenton

Bozarslan and others (1997) have applied the Fenton process to wastewaters from cigarette factories in Izmir, Turkey. Jar test studies showed that the optimum doses of $FeSO_4$ and H_2O_2 were 600 and 80 mg/L, respectively. Under these conditions, COD removals reached 96 percent after Fenton and biological treatment.

Horng and others (1998) have studied Fenton treatment of wastewater from a brewery plant. Treatment of wastewater containing 188 mg/L of COD using 500 mg/L of Fe(II) and 250 mg/L of H_2O_2 resulted in 45 percent removal of COD.

The Fenton process was applied to wastewater from a petroleum production facility in order to reduce TOC. The initial TOC concentration range was 25 to 50 mg/L. Experiments were conducted using 0 to 500 mg/L of H_2O_2, 0 to 400 mg/L of Fe(II), and a pH range of 5 to 6. Optimum TOC reduction was achieved with 125 mg/L of H_2O_2 and 105 mg/L of Fe(II) at a pH of 5 to 6. No specific percent removals have been reported. Reduction of the bicarbonate concentration in the wastewater was necessary during pretreatment. The chemical oxidation cost for the Fenton process used is estimated at $0.04/barrel of water treated; the volume of a barrel of water is not specified. Sludge generation associated with the Fenton process is assumed to have increased the cost.

O_3/H_2O_2

The effect of the O_3/H_2O_2 on the chemical degradation and biodegradability of debittering table olive industry wastewaters was studied. Samples of two kinds of wastewater were used: (1) synthetic wastewater prepared by treating green olives in 10 percent sodium hydroxide and (2) real wastewater collected from the olive industry. COD concentrations in both kinds of wastewater ranged from 19 to 25 mg/L. The temperature was maintained at about 20 °C during the O_3/H_2O_2 process. Use of O_3 and H_2O_2 at weights of about 3.5 and 2.4 gram, respectively, resulted in COD reductions of up to 90 percent (Beltran and others, 1999).

Beltran and others (1997) have investigated O_3/H_2O_2 treatment of distillery and tomato processing wastewaters. The semi-batch experiments involved use of a peristaltic pump that recirculated the solutions at a rate of 30 liters per hour (L/hr). The study showed that the O_3/H_2O_2 process reduced COD in tomato processing wastewater by 86 percent at a pH of 6. The process, however, was not as effective in treating distillery wastewater, as the results obtained were similar to those associated with ozonation alone.

Table 3-2. Summary of Industrial Wastewater Treatment

PROCESS (SYSTEM)	CONTAMINANT CONCENTRATION	TEST CONDITIONS	RESULTS		COST (2000 U.S. dollars)	REFERENCE
			Percent Removal	Additional Information		
SVOCs (Pilot Scale)						
SCWO (NORAM)	Nitrophenolates: 10,000 mg/L	Reactor volume: 3.5 L Volume treated: 200 L Temperature: 600 °C Influent pH: unknown Influent alkalinity: unknown Retention time: 10 to 60 seconds	>99	Ex situ treatment at the University of British Columbia, Vancouver, Canada; volume of water treated is unknown	Unknown	NORAM, 2000; Rehmat and others, 2000
Dyes (Pilot Scale)						
Fenton	Azo-Red Color: 60,000 ADMI c.u. DOC: 450 mg/L Ming Jade Color: 110,000 ADMI c.u. DOC: 430 mg/L Navy 106 Color: 48,000 ADMI c.u. DOC: 520 mg/L	Flow rate: 1.1 L/min H_2O_2 dose: 10,000 mg/L 70% H_2SO_4 dose: unknown Iron (II) sulfate dose: 300 mg/L Temperature: 65 °C Influent pH: 3 Influent alkalinity: unknown Retention time: 110 to 120 minutes	Azo-Red Color: 90 DOC: 19 Ming Jade Color: 99 DOC: 19 Navy 106 Color: 98 DOC: 3	On-site pretreatment of concentrated jet-dye waste stream from textile mill in Martinsville, Virginia, U.S.A.; volume of water treated is unknown	Reagent costs: Azo-Red: $2.20/m^3 Ming Jade: $2.30/m^3 Navy 106: $2.10/m^3	Price and others, 1994
Fenton (FSR Process®)	COD: 3,400 mg/L TOC: 850 mg/L	Flow rate: 0.083 to 0.17 L/min 35% H_2O_2 dose: 12,000 mg/L (Reactor 1) 7,000 mg/L (Reactor 2) 96% H_2SO_4 dose: unknown Iron (II) sulfate dose: 2,000 mg/L (Reactor 1) 700 mg/L (Reactor 2) Temperature: 50 °C Influent pH: 12 Treatment pH: 2 Influent alkalinity: unknown Retention time: 1 hour	COD: 82 TOC: 82	On-site pretreatment of industrial wastewater containing refractory COD and TOC; volume of water treated is unknown	Projected cost for 250-L/min, full-scale plant treating influent stream with COD of 8,000 mg/L to produce effluent with COD of <1 mg/L: $2,900,000/year (including raw material, maintenance, labor, and electricity costs)	Francoisse and Gregor, 1996

Table 3-2. Summary of Industrial Wastewater Treatment (Continued)

PROCESS (SYSTEM)	CONTAMINANT CONCENTRATION	TEST CONDITIONS	RESULTS		COST (2000 U.S. dollars)	REFERENCE
			Percent Removal	Additional Information		
Dyes (Pilot Scale) (Continued)						
Electrochemical Oxidation	5-day BOD: 450 mg/L Color: 3,400 ADMI c.u. COD: 1,200 mg/L TKN: 34 mg/L	Flow rate: 10 L/min Reactor volume: 5 L Sodium chloride dose: 10,000 mg/L 36% HCl dose: 2 mL/L Temperature: 42 °C Influent pH: 10 Power: 20 volts direct current; 50 A Retention time: 40 minutes	5-day BOD: 92 Color: 96 COD: 93 TKN: >99	Treatment of final effluent from dyeing and finishing process of textile mill in Thrace, Greece; volume of water treated is unknown	Unknown	Vlyssides and Israilides, 1998
E-beam	Reactive Red 120: 50 mg/L	Flow rate: 450 L/min Dose: 450 Mrads Influent pH: 5 Influent alkalinity: unknown Retention time: unknown	>95	Treatment of synthetic dye-contaminated wastewater in Miami Electron Beam Research Facility at Miami-Dade Central District Waste Water Treatment Plant, Florida, U.S.A.; volume of water treated is unknown	Unknown	Kurucz and others, 1998
Inorganics (Commercial Scale)						
SCWO (Chematur Aqua Critox®)	Ammonia: 6,900 mg/L TOC: >50,000 mg/L	Flow rate: 19 L/min Temperature: near 1,000 °C Pressure: 25 to 28 MPa Influent pH: unknown Influent alkalinity: unknown Retention time: 48 hours	Ammonia: >99 TOC: >99	Treatment of process and washdown water from Huntsman Corporation facility in Austin, Texas, U.S.A.; volume of water treated is unknown	Unknown	Griffith, 1995

3.3 Municipal Wastewater Treatment

The effectiveness of ANPO processes in treating municipal wastewater has been evaluated to a limited extent. This section describes pilot-scale studies involving use of the gamma-ray and E-beam processes to treat VOC- and microbe-contaminated municipal wastewater. The operating conditions and performance results for each pilot-scale application discussed in Section 3.3 are summarized in Table 3-3 at the end of the section.

3.3.1 VOC-Contaminated Municipal Wastewater

Cooper and others (1990) describe the use of a pilot-scale E-beam system to treat VOC-contaminated municipal wastewater. The E-beam system, which is located in the Electron Beam Research Facility at the Virginia Key Wastewater Treatment Plant, in Miami, Florida, U.S.A., has the capacity to treat 450 L/min of wastewater. The voltage required for the electron accelerator is 1.5 MeV. The beam current can be varied from 0 to 50 mA, providing doses of 0 to 850 krads. Influent streams of drinking water, secondary wastewater effluent, and anaerobically digested sewage sludge were used in the application. The secondary wastewater was the effluent of an extended aeration process. The effluent was chlorinated up to 1 minute prior to E-beam treatment. Chloroform, TCE, and toluene were removed from the wastewater with efficiencies of about 85, 97, and >95 percent, respectively. The total cost to construct the E-beam system was estimated to be $2.8 million. No breakdown of the cost is available.

3.3.2 Microbe-Contaminated Municipal Wastewater

This section describes pilot-scale evaluations of removal of the following microbes using the gamma-ray and E-beam processes.

ANPO Process	Microbes Removed
• Gamma-ray	• Coliform bacteria
• E-beam	• Coliform; coliphage; total bacteria

Gamma-Ray

In a pilot-scale application, Rawat and others (1998) have examined gamma-ray treatment of water samples containing coliform bacteria that were obtained from the Gajarawadi municipal sewage treatment plant in Boroda, Gujarat, India. The evaluation was conducted using the Sludge Hygenization Research Irradiator, which was commissioned by India's Department of Atomic Energy and installed adjacent to the treatment plant. The effluents used in experiments included (1) raw sewage from the grit chamber of the treatment plant, (2) effluent from the plant's primary settling tank, and (3) effluent from the plant's final settling tank. A ^{60}Co source was used to treat samples in batches of 3 m^3. The total coliform level in the raw sewage was about 4×10^5 colony-forming units per milliliter (cfu/mL). An irradiation dose of 200 Mrads reduced the coliform population by >99 percent. The effluent from the primary settling tank had about 3×10^4 cfu/mL of coliform. A dose of 40 Mrads reduced the coliform count by >99 percent. The coliform level in the effluent from the final settling tank was about 2×10^3 cfu/mL. An exponential decrease in the coliform population was observed when the dose was increased from 20 to 80 Mrads. In general, aeration of each of the three effluents prior to irradiation did not affect removal efficiencies. Gamma irradiation resulted in an approximately 20 percent reduction in the BOD levels of the primary and final settling tank effluents.

E-Beam

Researchers at the Electron Beam Research Facility at the Virginia Key Wastewater Treatment Plant in Miami, Florida, U.S.A., have studied removal of coliphage, coliform, and total bacteria from raw sewage and secondary effluent. The E-beam system had a 1.5-MeV, 50-mA electron accelerator capable of treating wastewater at a flow rate of 8 L/s. About 99.9 percent reduction in coliphage, coliform, and total bacteria was observed at an absorbed dose of 500 krads. Coliphage appeared to be more resistant to irradiation than the coliform and total bacteria. Better inactivation was observed in the raw sewage samples than in the secondary effluent samples. The researchers explain that the better inactivation in raw sewage may be due to its greater density of microorganisms and thus its greater target density (Farooq and others, 1993).

Table 3-3. Summary of Municipal Wastewater Treatment

PROCESS	CONTAMINANT CONCENTRATION	TEST CONDITIONS	RESULTS		COST (2000 U.S. dollars)	REFERENCE
			Percent Removal	Additional Information		
VOCs (Pilot Scale)						
E-beam	Chloroform: unknown TCE: unknown Toluene: unknown	Flow rate: 450 L/min Absorbed dose: 0 to 850 krads Influent pH: unknown Influent alkalinity: unknown Retention time: unknown	Chloroform: 85 TCE: 97 Toluene: >95	Ex situ treatment of municipal wastewater from Virginia Key Wastewater Treatment Plant, Miami, Florida, U.S.A.; volume of water treated is unknown	$2.8 million (no breakdown of cost available)	Cooper and others, 1990
Microbes (Pilot Scale)						
E-beam	Coliform, coliphage, and total bacteria: unknown	Flow rate: 8 L/min Absorbed dose: 500 krads Influent pH: unknown Influent alkalinity: unknown Retention time: unknown	99.9	Ex situ treatment of municipal wastewater from Virginia Key Wastewater Treatment Plant, Miami, Florida, U.S.A.; volume of water treated is unknown	Unknown	Farooq and others, 1993
Gamma-ray	Coliform bacteria Raw sewage: 4×10^5 cfu/mL Primary settling tank effluent: 13×10^4 cfu/mL	Flow rate: unknown Absorbed dose: 0 to 200 Mrads Influent pH: unknown Influent alkalinity: unknown Retention time: unknown	Raw sewage: >99 at absorbed dose of 200 Mrads Primary settling tank effluent: >99 at absorbed dose of 40 Mrads	Ex situ treatment of raw sewage and settling tank effluent from Gajarawadi municipal sewage treatment plant, Baroda, Gujarat, India; volume of water treated is unknown	Unknown	Rawat and others, 1998

3.4 Contaminated Drinking Water Treatment

The effectiveness of O_3/H_2O_2 process in treating contaminated drinking water has been evaluated for various contaminant groups, including VOCs and humic substances at the pilot-scale level, and SVOCs, humic substances, and microbes at the bench-scale level. This section discusses the effectiveness of O_3/H_2O_2 with regard to each of these contaminant groups. The operating conditions and performance results for each pilot-scale application discussed in Section 3.4 are summarized in Table 3-4 at the end of the section.

3.4.1 VOC-Contaminated Drinking Water

Myers (1990) discusses a pilot-scale application of O_3/H_2O_2 treatment of trihalomethane-contaminated water from two small water utilities managing 5,300 to 10,000 L/min in Macon (Plant 1) and Moberly (Plant 2), Missouri, U.S.A. The mobile treatment plant was housed in a 2.4- by 10.4-m trailer. Water from the treatment plant's raw water supply was piped to the plant's O_3 contact chamber, where it flowed by gravity. All chemicals except O_3 were fed to the treatment system in liquid form. O_3 was generated in the trailer and added through a porous diffuser stone to the bottom of a cylindrical contact column. Raw water was fed to the top of the column and flowed countercurrent to the O_3 for efficient mixing and contact.

The O_3 dose was 2 mg/L, and the transfer efficiency was estimated at 70 percent. The H_2O_2 dose was based on a mass ratio of H_2O_2:O_3 of 0.5, so 1 mg/L of H_2O_2 was used. The H_2O_2 solution was injected into the raw water line upstream of the O_3 contactor. The retention time and temperature in the reactor were 3 days and 25 °C, respectively. The raw water pH values for Plants 1 and 2 were 8.0 and 7.5, respectively.

The study showed a 30 percent trihalomethane reduction at Plant 1 as a result of using O_3 and H_2O_2 rather than O_3 alone. However, the trihalomethane concentration increased with use of O_3 and H_2O_2 at Plant 2; no explanation for this result has been reported. The treatment cost was estimated at \$0.06/m^3, including amortized capital (10 years at 8 percent) and operating costs. Capital cost estimates are for a water plant designated for a maximum flow rate of 11,000 L/min. O&M cost estimates are based on an average-day demand of 3,900 L/min and are for the costs of additional chemicals, energy, and equipment O&M only.

3.4.2 SVOC-Contaminated Drinking Water

No commercial- or pilot-scale information is available on the effectiveness of ANPO processes in treating drinking water contaminated with SVOCs. A bench-scale study involving use of the O_3/H_2O_2 process to treat SVOC-contaminated drinking water is summarized below.

An O_3/H_2O_2 system designed by Duguet and others (1989) was used to treat water samples collected from a drinking water well. The influent pH was 6.7, and the alkalinity was 225 mg/L as $CaCO_3$. The primary pollutant in the water was o-chloronitrobenzene, which was present at an average concentration of 1,500 µg/L. Threshold odor numbers were above 20. The system operated at a maximum flow rate of 7.5 L/min. The system consisted of two O_3 contactors, an O_3 generator, a dosage system for H_2O_2, and sand and granular activated carbon filters running in parallel to reduce biodegradable oxidation by-products. Optimal o-chloronitrobenzene removal was obtained when the H_2O_2:O_3 mass ratio was about 0.4. The O_3 and H_2O_2 doses used were 8 and 3 mg/L, respectively. The retention time was 20 minutes. Treatment resulted in 99 percent removal of the o-chloronitrobenzene. The study showed that increasing the retention time to 30 minutes did not improve removal efficiency. Bacterial regrowth in the distribution network was hindered by sand or granular activated carbon filtration. Taste and odor in granular activated carbon-filtered water diminished after 3 months, with the threshold odor numbers falling to 3.

3.4.3 Humic Substance-Contaminated Drinking Water

No evaluations of commercial-scale ANPO processes for removing humic substances from drinking water have been reported. However, one ANPO process (O_3/H_2O_2) has been evaluated at the pilot and bench scale in terms of removal of humic substances. The results of these evaluations are summarized below.

An O_3/H_2O_2 system was pilot-tested by the Metropolitan Water District of Southern California at its facility in La Verne, California, U.S.A. The system was used to treat raw water contaminated with odor-producing compounds, including geosmin (an earthy-smelling organic compound) and 2-methyl-isoborneol. The two sources of raw water were Colorado River Water and State Project Water. The average concentration of geosmin in the untreated

raw water was 0.1 µg/L. The O_3/H_2O_2 system achieved 98 percent removal of the geosmin. Acetaldehyde (2 to 5 µg/L) and formaldehyde (9 to 18 µg/L) were treatment by-products. It was observed that greater bactericidal action occurred when the ratio of H_2O_2 to O_3 was decreased. Effective geosmin removals were achieved regardless of the contact time. The capital cost estimated for implementing the O_3/H_2O_2 process at five existing water treatment facilities was $200 million (McGuire and others, 1990). Additional performance data regarding geosmin and 2-methylisoborneol removal using the O_3/H_2O_2 process is presented in a document recently prepared by the Metropolitan Water District of Southern California (2000).

Bench-Scale Study

Duguet and others (1989) discuss O_3/H_2O_2 treatment of synthetic wastewater contaminated with geosmin and 2-methylisoborneol in a semi-batch reactor. Geosmin and 2-methylisoborneol were present in the wastewater at concentrations of 0.3 to 0.5 µg/L. The O_3 dose was 0.2 to 0.3 mg/L, the H_2O_2 dose was about 0.1 mg/L, and the influent pH was 7.5. The geosmin concentration fell below 0.01 µg/L in <5 minutes of treatment; similar results were observed for 2-methylisoborneol removal. Increasing the H_2O_2 concentration had no effect on removal rates. Tests were conducted at various bicarbonate ion concentrations (0 to 400 mg/L) to evaluate the influence of •OH scavenging by bicarbonate ions on geosmin and 2-methylisoborneol oxidation. Under the study conditions, bicarbonates were not found to have a significant effect on removal efficiency.

3.4.4 Microbe-Contaminated Drinking Water

No evaluations of commercial- or pilot-scale ANPO processes for removing microbes from drinking water have been reported. However, one ANPO process (O_3/H_2O_2) for microbe removal from drinking water has been evaluated at the bench scale. The results of the evaluations are summarized below.

Miettinen and others (1998) have studied O_3/H_2O_2 treatment of drinking water collected from the Kuopio City Water Works in Finland. Raw water from Lake Kallavesi was pretreated by bank filtration and was then chemically purified using aluminum sulfate coagulation, clarification, and sand filtration before it was used in the bench-scale experiments.

The concentrations of nonpurgeable organic carbon and assimilated organic carbon in the test water were about 3.3 mg/L and 110 µg/L, respectively. The pH of the test water was 6.5. The treatment plant had an O_3 generator, an upflow bubble polyvinyl chloride column (O_3 contactor), and a nanofilter. The volume of the reactor was 100 L, the flow rate was maintained at 3.3 L/min, the O_3 dose was 2.7 mg/L, and the retention time was 30 minutes. H_2O_2 was injected into the system upstream of the O_3 contactor and immediately prior to the in-line static mixer. The H_2O_2 concentration was adjusted to maintain an O_3:H_2O_2 mass ratio of 0.4.

Microbial growth patterns in water samples were monitored for 10 days. These patterns were measured based on heterotrophic plate counts, acridine orange direct counts, bacterial biomass, and bacterial production. Bacterial colonies were enumerated after 3 days of incubation at 22 °C. The heterotrophic plate count was 60 cfu/mL, and the acridine orange direct count was 142,000 cells/mL. Immediately after O_3/H_2O_2 treatment of the water, the results were as follows: the nonpurgeable organic carbon was 2.6 mg/L, the assimilated organic carbon was 840 µg/L, the heterotrophic plate count was 2 cfu/mL, and the acridine orange direct count was 67,000 cells/mL. The heterotrophic plate count was decreased by 97 to >99.9 percent with the combination of O_3 and H_2O_2. However, after the acute toxicity produced by the oxidants disappeared, regrowth of temporarily inactivated heterotrophic microbes began quickly because O_3 has no residual bactericidal effect. Degradation of organic matter increased the concentration of assimilable organic carbon, thereby promoting microbial regrowth after O_3/H_2O_2 treatment (Miettinen and others, 1998).

In a related bench-scale study, Tuhkanen and others (1994) applied the O_3/H_2O_2 process to the water described above. Optimum mutagenicity removal for a given O_3 dose was achieved using an H_2O_2:O_3 mass ratio of 0.7. Ozonation combined with H_2O_2 treatment was significantly more effective than use of O_3 alone in removing mutagenicity and advanced oxidation precursors. However, ozonation was more effective in removing color and turbidity than ozonation combined with H_2O_2 treatment.

Table 3-4. Summary of Contaminated Drinking Water Treatment

PROCESS	CONTAMINANT CONCENTRATION	TEST CONDITIONS	RESULTS		COST (2000 U.S. dollars)	REFERENCE
			Percent Removal	Additional Information		
VOCs (Pilot Scale)						
O_3/H_2O_2	Trihalomethanes: unknown	Flow rate: unknown O_3 dose: 2 mg/L H_2O_2 dose: 1 mg/L Influent pH: 8.0 Retention time: 3 days	30	Ex situ treatment of raw water from two small water utilities in Macon and Mabely, Missouri, U.S.A.; volume of water treated is unknown	$0.06/m^3 (including capital, chemical, utility, and O&M costs)	Myers, 1990
Humic Substances (Pilot Scale)						
O_3/H_2O_2	Geosmin: 0.1 µg/L	Flow rate: 96 x 10^6 L/hr O_3 dose: 4 mg/L H_2O_2 dose: 4 mg/L Retention time: 20 minutes	98	Ex situ treatment of raw water from the Metropolitan Water District of southern California, La Verne, California, U.S.A.; volume of water treated is unknown By-products: acetaldehyde and formaldehyde	$200 million (including capital cost)	McGuire and others, 1990

3.5 Landfill Leachate Treatment

In a bench-scale study, COD in landfill leachate was removed using the electrochemical oxidation process. Landfill leachate from a sanitary landfill site in southern Taiwan had COD levels between 4,100 and 5,000 mg/L and a 5-day BOD concentration of <1,000 mg/L. The 5-day BOD:COD ratio of about 0.2 indicated that the organic compounds in the landfill leachate were minimally biodegradable. Ammonium and chloride were also present in the leachate at high concentrations—specifically, 2,100 to 3,000 mg/L and about 2,500 mg/L, respectively. Several types of anodes, including a graphite anode, a lead oxide/titanium anode, a binary rubidium-TiO_2-coated titanium anode, and an tin-lead-rubidium oxide-coated titanium anode, were studied. At a current density of 15,000 mA/cm^2 and an additional chloride concentration of 7,500 mg/L, leachate treatment for 240 minutes using the tin-lead-rubidium oxide-coated titanium anode resulted in 92 percent COD removal. A competition between COD removal and ammonium removal was observed. It was also found that treatment efficiency was proportionally related to hypochlorite ion production efficiency. Of the four anode types investigated, the tin-lead-rubidium oxide-coated titanium anode exhibited the highest electrocatalytic activity and achieved the best efficiencies for hypochlorite ion production and leachate treatment (Chiang and others, 1995b).

3.6 Contaminated Surface Water Treatment

The effectiveness of ANPO processes in treating contaminated surface water has been evaluated for pesticides and herbicides using the Fenton and O_3/H_2O_2 processes. This section discusses bench-scale evaluations of these processes with regard to removal of the following pesticides and herbicides from surface water.

ANPO Process	Pesticides and Herbicides Removed
• Fenton	• Atrazine
• O_3/H_2O_2	• Atrazine; benazolin; imazapyr; triclopyr

Fenton

Atrazine oxidation in natural waters was studied in jar tests using the Fenton process. Water samples collected from the Seine River in Paris, France, had an alkalinity of 200 mg/L as $CaCO_3$. Atrazine was present in the samples at an initial concentration of 3.5 µg/L. With an applied H_2O_2 dose of 5 mg/L and an Fe(II) dose of 10 mg/L, the atrazine removal efficiencies were 52 and 29 percent at pHs of 5 and 5.5, respectively (Prados and others, 1995).

O_3/H_2O_2

Prados and others (1995) have also studied degradation of atrazine in Seine River water by the O_3/H_2O_2 process. To achieve at least 90 percent removal of atrazine, doses of 4.5 mg/L of O_3 and 1.8 mg/L of H_2O_2 were used. The retention time in the batch reactor used was 10 minutes.

In another study, O_3/H_2O_2 degradation of atrazine, benazolin, imazapyr, and triclopyr in raw lowland surface water was compared to their oxidation by ozonation. The initial concentration of each chemical was 2 µg/L. Experiments were conducted at a pH of 7.5. With applied O_3 and H_2O_2 doses of 3 mg/L, the atrazine, benazolin, imazapyr, and triclopyr removals achieved by the O_3/H_2O_2 process were greater than those achieved by ozonation alone by 20, 11, 18, and 33 percent, respectively (Lambert and others, 1996).

3.7 References

Adams, C.D., W. Fusco, and T. Kanzelmeyer. 1995. "Ozone, Hydrogen Peroxide/Ozone and UV/Ozone Treatment of Chromium- and Copper-Complex Dyes: Decolorization and Metal Release." *Ozone Science and Engineering.* Volume 17, Number 2. Pages 149 through 162.

Aieta, E.M., K.M. Reagan, J.S. Lang, L. McReynolds, J.-W. Kang, and W.H. Glaze. 1988. "Advanced Oxidation Processes for Treating Groundwater Contaminated with TCE and PCE: Pilot-Scale Evaluations." *Journal of the American Water Works Association.* Volume 80, Number 5. Pages 64 through 72.

Alvarez, F., K. Topudurti, M. Keefe, C. Petropoulou, and T. Schlichting. 1998. "Field Evaluation of High Voltage Electron Beam Technology for Treating VOC-Contaminated Groundwater, Part I: VOC Removals and Treatment Costs."

Journal of Advanced Oxidation Technologies. Volume 3, Number 1. Pages 98 through 106.

Appelman, Evan H., Albert W. Jache, and John V. Muntean. 1996. "Use of Ozone Plus Hydrogen Peroxide to Degrade Macroscopic Quantities of Chelating Agents in an Aqueous Solution." *Industrial and Engineering Chemistry Research*. Volume 35, Number 4. Pages 1480 through 1482.

Barbeni, M., C. Minero, and E. Pelizzetti. 1987. "Chemical Degradation of Chlorphenols with Fenton's Reagent." *Chemosphere*. Volume 16, Number 10-12. Pages 2225 through 2237.

Barbier, P.F., and C. Petrier. 1996. "Study at 20 kHz and 500 kHz of the Ultrasound-Ozone Advanced Oxidation System: 4-Nitrophenol Degradation." *Journal of Advanced Oxidation Technologies*. Volume 1, Number 2. Pages 154 through 159.

Beltran, F.J., J.M. Encinar, and J.F. Gonzalez. 1997. "Industrial Wastewater Advanced Oxidation. Part 2. Ozone Combined with Hydrogen Peroxide or UV Radiation." *Water Research*. Volume 30, Number 10. Pages 2415 through 2428.

Beltran, Fernando J., Juan F. Garcia-Araya, Pedro M. Alvarez, and Javier Rivas. 1998a. "Aqueous Degradation of Atrazine and Some of Its Main By-Products with Ozone/Hydrogen Peroxide." *Journal of Chemical Technology and Biotechnology*. Volume 71, Number 4. Pages 345 through 355.

Beltran, Fernando J., Manuel Gonzalez, Francisco J. Rivas, and Pedro Alvarez. 1998b. "Fenton Reagent Advanced Oxidation on Polynuclear Aromatic Hydrocarbons in Water." *Water, Air, and Soil Pollution*. Volume 105, Number 3-4. Pages 685 through 700.

Beltran, F.J., J.F. Garcia-Araya, J. Frades, P. Alvarez, and O. Gimeno. 1999. "Effects of Single and Combined Ozonation with Hydrogen Peroxide or UV Radiation on the Chemical Degradation and Biodegradability of Debittering Table Olive Industrial Wastewaters." *Water Research*. Volume 33, Number 3. Pages 723 through 732.

Berger, P., N.K. Vel Leitner, M. Dore, and B. Legube. 1999. "Ozone and Hydroxyl Radicals Induced Oxidation of Glycine." *Water Research*. Volume 33, Number 2. Pages 433 through 441.

Beschkov, V., G. Bardarska, H. Gulyas, and I. Sekoulov. 1997. "Degradation of Triethylene Glycol Dimethyl Ether by Ozonation Combined with UV Irradiation or Hydrogen Peroxide Addition." *Water Science and Technology*. Volume 36, Number 2-3. Pages 131 through 138.

Bier, Eleanor L., Jasbir Singh, Zhengming Li, Steve D. Comfort, and Patrick J. Shea. 1999. "Remediating Hexahydro-1,3,5-Trinitro-1,2,5-Trazine[*sic*]-Contaminated Water and Soil by Fenton Oxidation." *Environmental Toxicology and Chemistry*. Volume 18, Number 6. Pages 1078 through 1084.

Boudenne, J.-L., and O. Cerclier. 1999. "Performance of Carbon Black-Slurry Electrodes for 4-Chlorophenol Oxidation." *Water Research*. Volume 33, Number 2. Pages 494 through 504.

Bozarslan, G., S.K. Celebi, F. Sengul. 1997. "Characterization and Treatability Studies of Cigarette Industry Wastewaters: A Case Study." *Water Science and Technology*. Volume 36, Number 2-3. Pages 69 through 74.

Chiang, L.-C., J.-E. Chang, and T.-C. Wen. 1995a. "Electrochemical Oxidation Process for the Treatment of Coke-Plant Wastewater." *Journal of Environmental Science and Health, Part A: Environmental Science and Engineering & Toxic and Hazardous Substance Control*. Volume 30, Number 4. Pages 753 through 771.

Chiang, Li-Choung, Juu-En Chang, and Ten-Chin Wen. 1995b. "Indirect Oxidation Effect in Electrochemical Oxidation Treatment of Landfill Leachate." *Water Research*. Volume 29, Number 2. Pages 671 through 678.

Chiang, Li-Choung, Juu-En Chang, and Shu-Chuan Tseng. 1997. "Electrochemical Oxidation Pretreatment of Refractory Organic Pollutants." *Water Science and Technology*. Volume 36, Number 2-3. Pages 123 through 130.

Chou, S.-S., Y.-H. Huang, S.-N. Lee, G.-H. Huang, and C.-P. Huang. 1999. "Treatment of High Strength Hexamine-containing Wastewater by Electro-Fenton Method." *Water Research*. Volume 33, Number 3. Pages 751 through 759.

Clancy, Peter B., Jennifer Armstrong, Michelle Couture, Robert Lussky, and Keith Wheeler. 1996. "Treatment of Chlorinated Ethenes in Groundwater with Ozone and Hydrogen Peroxide." *Environmental Progress*. Volume 15, Number 3. Pages 187 through 193.

Cooper, W.J., M.G. Nickelsen, T.D. Waite, and C.N. Kurucz. 1990. "High-energy Electron Beam Irradiation: an Advanced Oxidation Process for the Treatment of Aqueous Based Organic Hazardous Wastes." *Proceedings, A Symposium on Advanced Oxidation Processes for the Treatment of Contaminated Water and Air*. Toronto, Canada. June 4 and 5.

Cooper, W.J., G. Leslie, P.M. Tornature, W. Hardison, and P.A. Hajali. 2000. "MTBE and High Priority Contaminant Treatment with High Energy Electron Beam Injection." Unpublished.

Cortes, S., P. Ormad, A. Puig, and J.L. Ovelleiro. 1996. "Study of the Advanced Oxidation Processes of Chlorobenzenes in Water." *Ozone: Science and Engineering*. Volume 18, Number 4. Pages 291 through 298.

Cyr, P.J., M.R. Paraskewich, and R.P.S. Suri. 1999. "Sonochemical Destruction of Trichloroethylene in Water." *Water Science and Technology*. Volume 40, Number 4-5. Pages 131 through 136.

David, B., M. Lhote, V. Faure, and P. Boule. 1998. "Ultrasonic and Photochemical Degradation of Chlorpropham and 3-Chloroaniline in Aqueous Solution." *Water Research*. Volume 32, Number 8. Pages 2451 through 2461.

Drijvers, D., H. Van Langenhove, and K. Vervaet. 1998. "Sonolysis of Chlorobenzene in Aqueous Solution: Organic Intermediates." *Ultrasonics Sonochemistry*. Volume 5, Number 1. Pages 13 through 19.

Drijvers, D., H. Van Langenhove, L.N.T. Kim, and L. Bray. 1999. "Sonolysis of an Aqueous Mixture of Trichloroethylene and Chlorobenzene." *Proceedings, 6th European Society of Sonochemistry Meeting*. Rostock-Warnemunde, Germany. May 1998. Pages 115 through 122.

Drijvers, David, Robrecht De Baets, Alex De Visscher, and Herman Van Langenhove. 1996. "Sonolysis of Trichloroethylene in Aqueous Solution: Volatile Organic Intermediates." *Ultrasonics Sonochemistry*. Volume 3, Number 2. Pages S83 through S90.

Duguet, J.P., C. Anselme, P. Mazounie, and J. Mallevialle. 1990. "Application of Combined Ozone and Hydrogen Peroxide for the Removal of Aromatic Compounds from Groundwater." *Ozone Science and Engineering*. Volume 12, Number 3. Pages 281 through 294.

Echigo, S., H. Yamada, S. Matsui, S. Kawanishi, and K. Shishida. 1996. "Comparison Between O_3/UV, O_3/H_2O_2, UV and O_3 Processes for the Decomposition of Organophosphoric Acid Triesters." *Water Science and Technology*. Volume 34, Number 9. Pages 81 through 88.

Farooq, Shaukat, Charles N. Kurucz, Thomas D. Waite, and William J. Cooper. 1993. "Disinfection of Wastewaters: High-Energy Electron vs Gamma Irradiation." *Water Research*. Volume 27, Number 7. Pages 1177 through 1184.

Flaherty, K.A., and C.P. Huang. 1992. "Continuous Flow Applications of Fenton's Reagent for the Treatment of Refractory Wastewaters." *Chemical Oxidation: Technologies for the Nineties*. Volume 2. Edited by W.W. Eckenfelder, A.R. Bowers, and J.A. Roth. Technomic Publishing Co., Inc. Lancaster, Pennsylvania. Pages 58 through 77.

Françoisse and Gregor. 1996. "Application of a New Fenton Process (FSR PROCESS®) without Sludge Production for Treatment of Nonbiodegradable Wastewater." *Chemical Oxidation: Technologies for the Nineties*. Volume 6. Edited by W.W. Eckenfelder, A.R. Bowers, and J.A. Roth. Technomic Publishing Co., Inc. Lancaster, Pennsylvania. Pages 208 through 220.

Geo-Cleanse International, Inc. (Geo-Cleanse). 2000. Correspondence Regarding Case Studies on Geo-Cleanse® Fenton Process. From Matt Dingens, Vice President. To Suzette Tay, Environmental Scientist, Tetra Tech EM Inc.

Glaze, W.H., and J.-W. Kang. 1988. "Advanced Oxidation Processes for Treating Groundwater Contaminated with TCE and PCE: Laboratory Studies." *Journal of the American Water Works Association*. Volume 80, Number 5. Pages 57 through 63.

Gloyna, E.F., and Lixiong Li. 1993. "Supercritical Water Oxidation Model Development for Selected EPA Priority Pollutants." Prepared for U.S. Environmental Protection Agency (U.S. EPA) Office of Research and Development. March 31.

Gonze, E., L. Fourel, Y. Gonthier, P. Boldo, and A. Bernis. 1999. "Wastewater Pretreatment with Ultrasonic Irradiation to Reduce Toxicity." *Chemical Engineering Journal*. Volume 73, Number 2. Pages 93 through 100.

Griffith, J.W. 1995. "Design and Operation of the First Supercritical Wet Oxidation Industrial Waste Destruction Facility, 1995." *Chemical Oxidation: Technologies for the Nineties*. Volume 5. Edited by W.W. Eckenfelder, A.R. Bowers, and J.A. Roth. Technomic Publishing Co., Inc. Lancaster, Pennsylvania. Pages 22 through 38.

Hart, Edwin J., Christian-Herbert Fischer, and Arnim Henglein. 1990. "Sonolysis of Hydrocarbons in Aqueous Solution." *Radiation Physics and Chemistry*. Volume 36, Number 4. Pages 511 through 516.

Hirai, K., Y. Nagata, and Y. Maeda. 1996. "Decomposition of Chlorofluorocarbons and Hydrofluorocarbons in Water by Ultrasonic Irradiation." *Ultrasonics Sonochemistry*. Volume 3, Number 3. Pages S205 through S207.

Hirvonen, A., T. Tuhkanen, and P. Kalliokoski. 1996. "Treatment of TCE- and PCE--contaminated Ground Water Using UV/H_2O_2 and O_3/H_2O_2 Oxidation Processes." *Water Science and Technology*. Volume 33, Number 6. Pages 67 through 73.

Horng, R.Y., M.J. Perng, W.Y. Tzou, and C.H. Chen. 1998. "A Case Study of a Brewery Factory Wastewater Treatment by Anaerobic/Aerobic and Fenton Process." *Annual Conference and Exposition-Water Environment Federation*. Conference 69. Volume 3. Pages 531 through 538.

Huang, C.P., and C. Chu. 1991. "Electrochemical Oxidation of Phenolic Compounds from Dilute Aqueous Solutions." *Chemical Oxidation: Technologies for the Nineties*. Volume 1. Edited by W.W. Eckenfelder, A.R. Bowers, and J.A. Roth. Technomic Publishing Co., Inc. Lancaster, Pennsylvania. Pages 239 through 253.

Hunter, F. 1996. "Fenton's Treatment of 1,2,3--Trichloropropane: Chemical Reaction Byproducts, Pathway, and Kinetics." *Chemical Oxidation: Technologies for the Nineties*. Volume 6. Edited by W.W. Eckenfelder, A.R. Bowers, and J.A. Roth. Technomic Publishing Co., Inc. Lancaster, Pennsylvania. Pages 50 through 71.

In-Situ Oxidative Technologies, Inc. (ISOTEC). 2000. Correspondence Regarding Case Studies on ISOTEC™ Fenton Process. From Dave Zeras, President. To Suzette Tay, Environmental Scientist, Tetra Tech EM Inc.

Jank, M., H. Koeser, F. Luecking, M. Martienssen, and S. Wittchen. 1998. "Decolorization and Degradation of Erioglaucine (Acid Blue 9) Dye in Wastewater." *Environmental Technology*. Volume 19, Number 7. Pages 741 through 747.

Kawakami, W., S. Hashimoto, K. Nishimura, T. Miyata, and N. Suzuki. 1978. "Electron-beam Oxidation Treatment of a Commercial Dye by Use of a Dual-tube Bubbling Column Reactor." *Environmental Science and Technology*. Volume 12, Number 2. Pages 189 through 194.

Kochany, J., and A. Lugowski. 1998. "Application of Fenton's Reagent and Activated Carbon for Removal of Nitrification Inhibitors." *Environmental Technology*. Volume 19, Number 4. Pages 425 through 429.

Koskinen, W.C., K.E. Sellung, J.M. Baker, B.L. Barber, and R.H. Dowdy. 1994. "Ultrasonic Decomposition of Atrazine and Alachlor in Water." *Journal of Environmental Science and Health, Part B: Pesticides, Food Contaminants, and Agricultural Wastes*. Volume 29, Number 3. Pages 581 through 590.

Kotronarou, Anatassia, German Mills, and Michael R. Hoffmann. 1992a. "Decomposition of Parathion in Aqueous Solution by Ultrasonic Irradiation." *Environmental Science and Technology*. Volume 26, Number 7. Pages 1460 through 1462.

Kotronarou, Anatassia, German Mills, and Michael R. Hoffmann. 1992b. "Oxidation of Hydrogen Sulfide in Aqueous Solution by Ultrasonic Irradiation." *Environmental Science and*

Technology. Volume 26, Number 12. Pages 2420 through 2428.

Koyama, O., Y. Kamagata, and K. Nakamura. 1994. "Degradation of Chlorinated Aromatics by Fenton Oxidation and Methanogenic Digester Sludge." *Water Research*. Volume 28, Number 4. Pages 895 through 900.

Ku, Young, and Wen Wang. 1999. "The Decomposition Kinetics of Monocrotophos in Aqueous Solutions by the Hydrogen Peroxide-ozone Process." *Water Environment Research*. Volume 71, Number 1. Pages 18 through 22.

Kuo, C.-H., F. Yuan, and D.O. Hill. 1997. "Kinetics of Oxidation of Ammonia in Solutions Containing Ozone With or Without Hydrogen Peroxide." *Industrial and Engineering Chemistry Research*. Volume 36, Number 10. Pages 4108 through 4113.

Kuo, Chiang-Hai, and Shyh-Ming Chen. 1996. "Ozonation and Peroxone Oxidation of Toluene in Aqueous Solutions." *Industrial and Engineering Chemistry Research*. Volume 35, Number 11. November. Pages 3973 through 3983.

Kuo, W.G. 1992. "Decolorizing Dye Wastewater with Fenton's Reagent." *Water Research*. Volume 26, Number 7. Pages 881 through 886.

Kurucz, C.N., H. An, J. Greene, T.D. Waite, and W.J. Cooper. 1998. "Decolorization of Simulated Dye Wastewater by High Energy Electron Beam Irradiation with Fe(II) Addition." *Journal of Advanced Oxidation Technologies*. Volume 3, Number 1. Pages 116 through 123.

Lajeunesse, C.A., and S.F. Rice. 1995. "Case Study on the Destruction of Organic Dyes in Supercritical Water." *Chemical Oxidation: Technologies for the Nineties*. Volume 5. Edited by W.W. Eckenfelder, A.R. Bowers, and J.A. Roth. Technomic Publishing Co., Inc. Lancaster, Pennsylvania. Pages 13 through 21.

Lambert, Steven D., Nigel J.D. Graham, and Brian T. Croll. 1996. "Degradation of Selected Herbicides in a Lowland Surface Water by Ozone and Ozone-hydrogen Peroxide." *Ozone Science and Engineering*. Volume 18, Number 3. Pages 251 through 269.

Land, J., and J. Ellis. 1982. "Oxidation of Aqueous Phenol Solutions in the Presence of Polyelectrolytes." *Water Research*. Volume 16, Number 7. Pages 1139 through 1146.

Leonhardt, E., and R. Stahl. 1998. "Decomposition of Acenaphthylene by Ultrasonic Irradiation." *Analytical Chemistry*. Volume 70, Number 6. March 15. Pages 1228 through 1230.

Leu, Horng G., H. Sheng, and Tze M. Lin. 1998. "Enhanced Electrochemical Oxidation of Anionic Surfactants." *Journal of Environmental Science and Health, Part A: Toxic/Hazardous Substances and Environmental Engineering*. Volume 33, Number 4. Pages 681 through 699.

Lev, A.A., and V.V. Deshpande. 1996. "Design of Advanced Oxidation Process for Decolorization of Reactive Dye Waste Stream Using Fenton's Reagent." *Chemical Oxidation: Technologies for the Nineties*. Volume 6. Edited by W.W. Eckenfelder, A.R. Bowers, and J.A. Roth. Technomic Publishing Co., Inc. Lancaster, Pennsylvania. Pages 13 through 18.

Li, L., P. Chen, and E.F. Gloyna. 1994. "Pilot-Plant Validation of Kinetic Models for Supercritical Water Oxidation." *Chemical Oxidation: Technologies for the Nineties*. Volume 4. Edited by W.W. Eckenfelder, A.R. Bowers, and J.A. Roth. Technomic Publishing Co., Inc. Lancaster, Pennsylvania.

Li, Z.M., S.D. Comfort, and P.J. Shea. 1997. "Destruction of 2,4,6-Trinitrotoluene by Fenton Oxidation." *Journal of Environmental Quality*. Volume 26, Number 2. Pages 480 through 487.

Lin, J.G., A.C. Chao, and Y.S. Ma. 1998a. "Advanced Decomposition of Wastewater Containing 2-Chlorophenol with the Ultrasonic/Fenton Process." *Proceedings of the Industrial Waste Conference-Purdue University*. Volume 52. Pages 355 through 368.

Lin, Kuen Song, Paul H. Wang, and M.C. Li. 1998b. "Oxidation of 2,4-Dichlorophenol in Supercritical Water." *Chemosphere*. Volume 36, Number 9. Pages 2075 through 2083.

Lin, Sheng H., Ching T. Shyu, and Mei C. Sun. 1998c. "Saline Wastewater Treatment by Electrochemical Method." *Water Research*. Volume 32, Number 4. Pages 1059 through 1066.

Lin, Sheng H., and Cho C. Lo. 1997. "Fenton Process for Treatment of Desizing Wastewater." *Water Research.* Volume 31, Number 8. Pages 2050 through 2056.

Lin, Sheng H., and Ming L. Chen. 1997. "Purification of Textile Wastewater Effluents by a Combined Fenton Process and Ion Exchange." *Desalination.* Volume 109, Number 2. Pages 121 through 130.

Lipczynska-Kochany, E. 1991. "Degradation of Aqueous Nitrophenols and Nitrobenzene by Means of the Fenton Reaction." *Chemosphere.* Volume 22, Number 5-6. Pages 529 through 536.

Lipczynska-Kochany, Ewa, Gregor Sprah, and Susan Harms. 1995. "Influence of Some Groundwater and Surface Waters [*sic*] Constituents on the Degradation of 4-Chlorophenol by the Fenton Reaction." *Chemosphere.* Volume 30, Number 1. Pages 9 through 20.

Masten, S.J., and J. Hoigne. 1992. "Comparison of Ozone and Hydroxyl Radical-Induced Oxidation of Chlorinated Hydrocarbons in Water." *Ozone Science and Engineering.* Volume 14. Pages 197 through 214.

McGuire, M.J., C.H. Tate, and N.L. Patania. 1990. "Ozone Chloramines and Activated Carbon to Control Disinfection By-Products." *Aqua (OXF).* Volume 39, Number 1. Pages 36 through 47.

Metropolitan Water District of Southern California. 2000. "Demonstration-Scale Evaluation of Ozone and Peroxone." American Water Works Association Research Foundation. Denver, Colorado.

Miettinen, Iikka T., Terttu Vartiainen, Tarja Nissinen, Tuula Tuhkanen, and Pertti J. Martikainen. 1998. "Microbial Growth in Drinking Waters Treated with Ozone, Ozone/Hydrogen Peroxide or Chlorine." *Ozone Science and Engineering.* Volume 20, Number 4. Pages 303 through 315.

Mohanty, N.R., and I.W. Wei. 1993. "Oxidation of 2,4 Dinitrotoluene Using Fenton's Reagent: A Discussion of Practical Applications." *Chemical Oxidation: Technologies for the Nineties.* Volume 3. Edited by W.W. Eckenfelder, A.R. Bowers, and J.A. Roth. Technomic Publishing Co., Inc. Lancaster, Pennsylvania.

Myers, A.G. 1990. "Evaluating Alternative Disinfectants for THM Control in Small Systems." *Journal of the American Water Works Association.* Volume 82, Number 6. Pages 77 through 84.

Nagata, Yoshio, Kyozo Hirai, Hiroshi Bandow, and Yasuaki Maeda. 1996. "Decomposition of Hydroxybenzoic and Humic Acids in Water by Ultrasonic Irradiation." *Environmental Science and Technology.* Volume 30, Number 4. Pages 1133 through 1138.

Nickelsen, M.G., W.J. Cooper, K.E. O'Shea, M. Aguilar, D.V. Kalen, C.N. Kurucz, and T.D. Waite. 1998. "The Elimination of Methane Phosphonic Acid, Dimethyl Ester (DMMP) from Aqueous Solution Using ^{60}Co-γ and Electron Beam Induced Radiolysis: A Model Compound for Evaluating the Effectiveness of the E-Beam Process in the Destruction of Organophosphorus Chemical Warfare Agents." *Journal of Advanced Oxidation Technologies.* Volume 3, Number 1. Pages 43 through 54.

NORAM Engineering and Constructors Limited (NORAM). 2000. Correspondence Regarding Case Studies on NORAM Supercritical Water Oxidation Process. From Steve Sopora, Engineer. To Suzette Tay, Environmental Scientist, Tetra Tech EM Inc.

Öğütveren, U.B., E. Toru, and S. Koparae. 1999. "Removal of Cyanide by Anodic Oxidation for Wastewater Treatment." *Water Research.* Volume 33, Number 8. Pages 1851 through 1856.

Olson, Terese M., and Philippe F. Barbier. 1994. "Oxidation Kinetics of Natural Organic Matter by Sonolysis and Ozone." *Water Research.* Volume 28, Number 6. Pages 1383 through 1391.

Oxidation Systems, Inc. (OSI). 2000. Correspondence Regarding Case Studies on OSI HYDROX Hydrodynamic Cavitation Process. From Joseph Pisani, President. To Suzette Tay, Environmental Scientist, Tetra Tech EM Inc.

Oturan, Mehmet A., Jean-Jacques, Nihal Oturan, and Jean Pinson. 1999. "Degradation of Chlorophenoxyacid Herbicides in Aqueous Media Using a Novel Electrochemical Method." *Pesticide Science.* Volume 55, Number 5. Pages 558 through 562.

Pisani, J.A., S.E. Beale, and E.R. Skov. 1997. "Water Treatment by Cavitation Induced Hydroxyl Radical Oxidation." Presented at 1997 Chem Show, New York City, New York. November 18.

Polcaro, Anna M., and Simona Palmas. 1997. "Electrochemical Oxidation of Chlorophenols." *Industrial and Engineering Chemistry Research*. Volume 36, Number 5. Pages 1791 through 1798.

Portenlänger, G., and H. Heusinger. 1992. "Chemical Reactions Induced by Ultrasound and Gamma-Rays in Aqueous Solutions of L Ascorbic Acid." *Carbohydrate Research*. Volume 232, Number 2. Pages 291 through 301.

Prados, M., H. Paillard, and P. Roche. 1995. "Hydroxyl Radical Oxidation Processes for the Removal of Triazine from Natural Water." *Ozone Science and Engineering*. Volume 17. Pages 183 through 194.

Price, V., III, D.L. Michelsen, R.T. Chan, and J.W. Balko. 1994. "Continuous Color Removal from Concentrated Dye Waste Discharges Using Reducing and Oxidizing Chemicals - A Pilot Plant Study." *Chemical Oxidation: Technologies for the Nineties*. Volume 4. Edited by W.W. Eckenfelder, A.R. Bowers, and J.A. Roth. Technomic Publishing Co., Inc. Lancaster, Pennsylvania.

Rawat, K.P., A. Sharma, and S.M. Rao. 1998. "Microbiological and Physicochemical Analysis of Radiation Disinfected Municipal Sewage." *Water Research*. Volume 32, Number 3. Pages 737 through 740.

Rehmat, Tazim, Richard Branion, Steven Rogak, Stuart Gairns, and Edward Hauptmann. 2000. "Supercritical Water Oxidation." Unpublished.

Roche, P., and M. Prados. 1995. "Removal of Pesticides by Use of Ozone or Hydrogen Peroxide/Ozone." *Ozone Science and Engineering*. Volume 17, Number 6. Pages 657 through 672.

Solozhenko, E.G., N.M. Soboleva, and V.V. Goncharuk. 1995. "Decolourization of Azodye Solutions by Fenton's Oxidation." *Water Research*. Volume 29, Number 9. Pages 2206 through 2210.

Spritzer, M.H., D.A. Hazelbeck, and K.W. Downey. 1995. "Supercritical Water Oxidation of Chemical Agents, Solid Propellants and Other DoD Hazardous Wastes." Presented at U.S. Army Program Management for Chemical Demilitarization Workshop on Advances in Alternative Demilitarization Technologies, Reston, Virginia.

Su, Y., Y. Wang, J.L. Daschbach, T.B. Flyberger, M.A. Henderson, J. Janata, and C.H.F. Peden. 1998. "Gamma-Ray Destruction of EDTA Catalyzed by Titania." *Journal of Advanced Oxidation Technologies*. Volume 3, Number 1. Pages 63 through 69.

Tachiev, G., A.R. Bowers, and J.A. Roth. 1998. "Hydrogen Peroxide Oxidation of Phenols Catalyzed by Iron Ions." *Chemical Oxidation: Technologies for the Nineties*. Volume 8. Edited by W.W. Eckenfelder, A.R. Bowers, and J.A. Roth. Technomic Publishing Co., Inc. Lancaster, Pennsylvania.

Takiyama, M.M.K., C.-S. Chu, Y.-C. Huang, C.P. Huang, and H.S. Huang. 1994. "The Removal of Priority Pollutants from Groundwater by Advanced Oxidation Processes." *Proceedings, 26th Mid-Atlantic Industrial Waste Conference*. University of Delaware. Pages 178 through 185.

Tan, L., G. Amy, M. Rigby, J. Renna, and K. Kemp. 1991. "Ozonation of Colored Groundwater, Pilot-Scale and Full-Scale Experiences." *Ozone Science and Engineering*. Volume 13, Number 1. Pages 109 through 125.

Topudurti, K., M. Keefe, C. Petropoulou, T. Schlichting, and F. Alvarez. 1998. "Field Evaluation of High Voltage Electron Beam Technology for Treating VOC-Contaminated Groundwater, Part II: Acute Toxicity Changes and By-product Formation." *Journal of Advanced Oxidation Technologies*. Volume 3, Number 1. Pages 107 through 115.

Toro, E., M. Zappi, and J. Colucci. 2000. "The Use of Advanced Oxidation Processes for the Treatment of Water Contaminated with Acetone." U.S. Army Corps of Engineers Waterways Experiment Station. Unpublished.

Toste, A.P. 1998. "Gamma-Ray-Induced Destruction of Nitrilotriacetic Acid in a Simulated, Mixed Nuclear Waste: Radiolytic and Chemical Forces." *Journal of Advanced Oxidation*

Technologies. Volume 3, Number 1. Pages 70 through 78.

Tuhkanen, T.A., T.K. Kainulainen, T.K. Vartiainen, and P.J. Kalliokoski. 1994. "The Effect of Preozonation, Ozone/Hydrogen Peroxide Treatment, and Nanofiltration on the Removal of Organic Matter from Drinking Water." *Ozone Science and Engineering*. Volume 16, Number 5. Pages 367 through 383.

U.S. Environmental Protection Agency (U.S. EPA). 1996. "Test Methods for Evaluating Solid Waste" (SW-846) Method 8260.

Vella, P.A., and B. Veronda. 1993. "Oxidation of Trichloroethylene: A Comparison of Potassium Permanganate and Fenton's Reagent." *Chemical Oxidation: Technologies for the Nineties*. Volume 3. Edited by W.W. Eckenfelder, A.R. Bowers, and J.A. Roth. Technomic Publishing Co., Inc. Lancaster, Pennsylvania.

Vinodgopal, K., J. Peller, O. Makogon, and P.V. Kamat. 1998. "Ultrasonic Mineralization of a Reactive Textile Azo Dye, Remazol Black B." *Water Research*. Volume 32, Number 12. Pages 3646 through 3650.

Vlyssides, A.G., and C.J. Israilides. 1998. "Electrochemical Oxidation of a Textile Dye and Finishing Wastewater Using a Pt/Ti Electrode." *Journal of Environmental Science and Health, Part A: Toxic/Hazardous Substances and Environmental Engineering*. Volume 33, Number 5. Pages 847 through 862.

Volk, C., P. Roche, C. Renner, H. Paillard, and J.C. Joret. 1993. "Effects of Ozone-Hydrogen Peroxide Combination on the Formation of Biodegradable Dissolved Organic Carbon." *Ozone Science and Engineering*. Volume 15, Number 5. Pages 405 through 418.

Wang, Y. 1991. "Effects of Chemical Oxidation on Anaerobic Treatment of Phenols." *Chemical Oxidation: Technologies for the Nineties*. Volume 1. Edited by W.W. Eckenfelder, A.R. Bowers, and J.A. Roth. Technomic Publishing Co., Inc. Lancaster, Pennsylvania. Pages 145 through 156.

Weavers, Linda K., Frank H. Ling, and Michael R. Hoffmann. 1998. "Aromatic Compound Degradation in Water Using a Combination of Sonolysis and Ozonolysis." *Environmental Science and Technology*. Volume 32, Number 18. Pages 2727 through 2733.

Wiktorowski, S., R. Tosik, and K. Janio. 1991. "Neutralization by Ozone and Hydrogen Peroxide of Thiophenol Containing Wastewaters from Pharmaceutical Industry." *Chemistry for the Protection of the Environment*. Plenum Press, New York, New York. Pages 609 through 619.

Yasuda, Keiji, Misako Tachi, Yoshiyuki Bando, and Masaaki Nakamura. 1999. "Effect of Liquid Mixing on Performance of Porphyrin Decomposition by Ultrasonic Irradiation." *Journal of Chemical Engineering of Japan*. Volume 32, Number 3. Pages 347 through 349.

Yu, Gang, Wanpeng Zhu, and Zhihua Yang. 1998. "Pretreatment and Biodegradability Enhancement of DSD Acid Manufacturing Wastewater." *Chemosphere*. Volume 37, Number 3. Pages 487 through 494.

Zappi, M.E., N.R. Francingues, J.D. Smith, T.A. Brooks, and D.W. Strang. 1992. "Evaluation of Oxidation Processes for Removal of Chloroform from Three Contaminated Groundwaters." *Proceedings of Hazardous Materials Control/Superfund '92*. December 1 through 3. Washington, DC. Pages 705 through 711.

Zhu, W., Z. Yang, and L. Wang. 1996. "Application of Ferrous-Hydrogen Peroxide for the Treatment of H-acid Manufacturing Process Wastewater." *Water Research*. Volume 30, Number 12. Pages 2949 through 2954.

Zona, R., S. Schmid, and S. Solar. 1999. "Detoxification of Aqueous Chlorophenol Solutions by Ionizing Radiation." *Water Research*. Volume 33, Number 5. Pages 1314 through 1319.

Section 4
Contaminated Air Treatment

ANPO processes have been demonstrated to be effective for treatment of contaminated air at the pilot- and bench-scale levels. No evaluations of commercial-scale ANPO processes for treatment of contaminated air have been reported. Matrices to which ANPO has been applied include (1) air stripper off-gas, (2) industrial emissions, and (3) automobile emissions. Collectively, ANPO has been applied to the following types of airborne contaminants: VOCs, SVOCs, NO_x, SO_x, and metals.

To assist environmental practitioners in selecting ANPO systems to treat contaminated air, this section includes pilot-scale system evaluation results for the electrical discharge-based nonthermal plasma, gamma-ray, and E-beam processes. This section also presents supplemental information from bench-scale studies of ANPO processes.

As described in Section 1.2, Section 4 organizes the performance and cost data for each matrix first by contaminant group, then by scale of application (pilot or bench), and finally by ANPO system or process. In general, pilot-scale applications are discussed in detail. Such discussions include, as available, a system description, operating conditions, performance data, and system costs presented in 2000 U.S. dollars. Bench-scale studies of ANPO processes are described in less detail and only if they provide information that supplements pilot-scale evaluation results. The level of detail provided for bench-scale studies varies depending on the source of information used. For example, percent removals and test conditions are not specified for some bench-scale studies because such information is unavailable in the sources.

At the end of each matrix section, a table is provided that summarizes operating conditions and performance results for each pilot-scale application discussed. The references cited in Section 4 are listed in Section 4.4.

4.1 Air Stripper Off-Gas Treatment

The effectiveness of ANPO processes in treating air stripper off-gas has been evaluated for VOCs and SVOCs. This section discusses ANPO process effectiveness with regard to both of these contaminant groups. The operating conditions and performance results for the pilot-scale application discussed in Section 4.1 are summarized in Table 4-1 at the end of the section.

4.1.1 VOC-Containing Air Stripper Off-Gas

This section discusses treatment of VOC-containing air stripper off-gas using the E-beam process on a pilot scale. Information is also included on treatment of VOC-containing air using the electrical discharge-based nonthermal plasma, gamma-ray, and E-beam processes at the bench-scale level.

Pilot-Scale Application

A mobile, pilot-scale E-beam system called the AGATE-M system was field-tested using air stripper off-gas at a groundwater remediation site in Dusseldorf, Germany (Prager and others, 1998). The E-beam system is housed in a 9-m-long container and is rated for a maximum flow rate of 1,200 m^3/hr. The air stripper off-gas passes through an inlet filter and an optional ultrasonic humidifier before entering the E-beam reaction chamber. The E-beam is generated by a low-energy accelerator. The window separating the accelerator from the reaction chamber is made of titanium foil. The accelerator is housed in a compact, lead-shielded box with labyrinths for incoming and outgoing ducts. Treated off-gas from the E-beam system is dry-scrubbed using a compact, high-efficiency filter filled with lime granulate. O_3 formed during E-beam irradiation is catalytically decomposed by passing the scrubbed gas through an activated carbon filter.

During the field test, VOC contaminants in the air stripper off-gas included the following: cis-1,2-DCE (1.2 parts per million by volume [ppmv]); 1,1-DCA (0.016 ppmv); 1,1-DCE (0.002 ppmv); PCE (0.58 ppmv); 1,1,1-TCA (0.34 ppmv); TCE (0.73 ppmv); and trans-1,2-DCE (0.002 ppmv). The total VOC concentration was about 3 ppmv. The electron accelerator in the system generated an accelerating voltage of 190 keV and a beam power of 11 kW. The absorbed dose was 1.6 Mrads. The flow rate in the system was 1,000 m^3/hr, and the mean residence time was 0.2 second.

The AGATE-M system achieved about 90 percent removal of total VOCs. Higher removal efficiencies were achieved for olefinic VOCs than for saturated VOCs. Chloroacetyl chlorides and phosgene were identified as reaction by-products.

The estimated treatment cost including capital, depreciation, labor, electricity, activated carbon, and

dry-sorption material costs, based on a flow rate of 100 m^3/hr, was \$0.28/m^3 of air stripper off gas treated; the cost of generating the off-gas has not been reported.

Bench-Scale Studies

This section summarizes bench-scale study results for use of the electrical discharge-based nonthermal plasma, gamma-ray, and E-beam processes to remove the following VOCs from gas streams. Unless otherwise noted, the source of the gas stream used for a given study is unspecified.

ANPO Process	VOCs Removed
• Electrical discharge-based nonthermal plasma	• Acetone; benzene; carbon tetrachloride; cis-1,2-DCE; 1,1-DCA; 1,1-DCE; 1,2-dichlorobenzene; ethylbenzene; ethylene; methanol; o-xylene; PCE; 1,1,1-TCA; TCE; toluene; 1,2,4-trimethylbenzene; total xylenes
• Gamma-ray	• Benzene; chlorobenzene; DCA; DCE; o-xylene; PCE; TCE; toluene; VC
• E-beam	• Benzene, carbon tetrachloride; chlorobenzene, cis-1,2-DCE; DCA; DCE; ethylene; Freon 113; methanol; o-xylene; PCE; 1,1,1-TCA; TCE; toluene; VC

Electrical Discharge-Based Nonthermal Plasma

Removal of VOCs using a bench-scale silent discharge plasma system developed by the U.S. Department of Energy Los Alamos National Laboratory has been studied as part of the Strategic Environmental Research and Development Program's National Environmental Technology Test Sites program (Chapman and others, 1997). For this study, 40 pyrex glass chambers were used as the dielectric material in the reactor. The contaminants in the influent included acetone (120 ppmv); cis-1,2-DCE (2.4 ppmv); 1,1-DCA (3.3 ppmv); 1,1-DCE (4.4 ppmv); 1,2-dichlorobenzene (31 ppmv); ethylbenzene (2.8 ppmv); PCE (76 ppmv); 1,1,1-TCA (160 ppmv); TCE (83 ppmv); 1,2,4-trimethylbenzene (10 ppmv); and total xylenes (16 ppmv). The gas stream was dehumidified, and hydrogen gas was added at a ratio of one part hydrogen gas to one part VOCs. Removals ranged from >95 percent (cis-1,2-DCE) to >99 percent (total xylenes). HCl, hydrofluoric acid, phosgene, O_3, and dioxin were identified as reaction by-products.

Penetrante and others (1997) have compared the energy efficiencies associated with removing VOCs (benzene, ethylene, o-xylene, and toluene) using (1) an electrical discharge-based nonthermal plasma process and (2) an E-beam process. Specifically, the energy efficiencies of a pulsed corona reactor capable of delivering 15 to 35 kilovolts of output in 100-nanosecond pulses at repetition rates ranging from 100 hertz to 1 kHz were compared to those of an E-beam reactor with an accelerating voltage of 125 keV. The study was carried out using 100 ppmv of each VOC in dry air streams (20 percent O_2, 80 percent nitrogen) at a temperature of 25 °C. For the pulsed corona process, the study showed that energy densities of 1.4×10^{-4}, 1.0×10^{-5}, 4.5×10^{-5}, and 2.7×10^{-5} kilowatt-hours per liter (kWhr/L) were required to achieve 63 percent removal of benzene, ethylene, o-xylene, and toluene, respectively. For the E-beam process, the study showed that energy densities of 1.1×10^{-5}, 1.9×10^{-6}, 1.4×10^{-6}, and 4.2×10^{-6} kWhr/L were required to achieve 63 percent removal of benzene, ethylene, o-xylene, and toluene, respectively. Thus, the energy densities required by the E-beam process to achieve 63 percent removal were 92 percent lower for benzene, 81 percent lower for ethylene, 97 percent lower for o-xylene, and 96 percent lower for toluene.

In an earlier study, Penetrante and others (1996a) compared the energy efficiencies associated with removing carbon tetrachloride and TCE using (1) an electrical discharge-based nonthermal plasma process and (2) an E-beam process. The test conditions were the same as those used later by Penetrante and others (1997). For the nonthermal plasma process, the study showed that the energy densities required to achieve 63 percent removal of carbon tetrachloride and TCE were 1.5×10^{-4} and 4.4×10^{-6} kWhr/L, respectively. For the E-beam process, the study showed that the energy densities required to achieve 63 percent removal of carbon tetrachloride and TCE were 2.5×10^{-6} and 8.3×10^{-7} kWhr/L, respectively. Thus, the energy densities required by the E-beam process to achieve 63 percent removal were 98 percent lower for carbon tetrachloride and 81 percent lower for TCE.

Penetrante and others (1996b) have also compared the energy efficiencies of removing methanol using an (1) electrical discharge-based nonthermal plasma

process and (2) an E-beam process. Specifically, the energy efficiencies of a pulsed corona reactor and a dielectric-barrier discharge reactor were compared to the energy efficiency of an E-beam reactor. The study was carried out using test conditions similar to those discussed above for Penetrante and others (1997, 1996a). The study showed that energy densities of 1.2×10^{-4} and 4.2×10^{-6} kWhr/L were required to achieve 90 percent removal of methanol by the electrical discharge-based nonthermal plasma and E-beam processes, respectively. Thus, the energy density required to achieve 90 percent removal of methanol by the E-beam process was 97 percent lower. No significant difference was observed in the performance of the pulsed corona reactor and the dielectric-barrier discharge reactor.

Amirov and others (1997) have evaluated the effectiveness of removing toluene using a ferroelectric bed reactor packed with barium titanate-based ceramic beads at the bench scale. Reactor flow rates were varied from 5 to 20 L/min. The study showed that the removal efficiency for toluene increased from near zero at an initial concentration of 200 ppmv to about 8 ppmv per watt-hour per cubic meter at an initial concentration of 700 ppmv.

Gamma-Ray

Hakoda and others (1998) have compared removals of VOCs (benzene, chlorobenzene, DCA, DCE, o-xylene, PCE, TCE, toluene, and VC) from a synthetic, gaseous matrix using (1) the gamma-ray process and (2) the E-beam process. For this study, a ^{60}Co gamma-ray irradiation system was compared to an E-beam irradiation system having an electron accelerator with an accelerating voltage of 3 MeV and a beam current of 25 mA. For the gamma-ray test, VOCs in the humid feed stream were present at the following concentrations: benzene, 95 ppmv; chlorobenzene, 130 ppmv; DCA, 320 ppmv; DCE, 320 ppmv; o-xylene, 93 ppmv; PCE, 320 ppmv; TCE, 320 ppmv; toluene, 140 ppmv; and VC, 50 ppmv. For the E-beam test, VOCs in the humid feed stream were present at the following concentrations: benzene, 89 ppmv; chlorobenzene, 100 ppmv; DCA, 320 ppmv; DCE, 320 ppmv; o-xylene, 93 ppmv; PCE, 320 ppmv; TCE, 320 ppmv; toluene, 150 ppmv; and VC, 51 ppmv. The feed streams were maintained at a flow rate of 2 L/min.

For the gamma-ray process, the study showed that chloroethenes were more easily removed than the aromatic VOCs. The highest removals for benzene (58 percent), chlorobenzene (40 percent), o-xylene (80 percent), and toluene (72 percent) were achieved at a dose of about 1.1 Mrads. However, 90 percent removals were achieved at smaller doses for DCE (0.5 Mrad), PCE (0.5 Mrad), TCE (0.48 Mrad), and VC (0.32 Mrad). The highest DCA removal (about 30 percent) was achieved at a dose of about 1.1 Mrads. For the E-beam process, the study showed that chloroethenes were also more easily removed than aromatic VOCs. The highest removals for benzene (45 percent), chlorobenzene (34 percent), o-xylene (80 percent), and toluene (53 percent) were achieved at a dose of 1.3 Mrads. However, 90 percent removal was achieved at smaller doses for DCE (0.57 Mrad), PCE (0.22 Mrad), TCE (0.35 Mrad), and VC (0.40 Mrad). The highest DCA removal (about 15 percent) was achieved at a dose of 1.3 Mrad.

E-Beam

Removal of VOCs using Zapit Technologies' bench-scale E-beam system was studied as part of the Strategic Environmental Research and Development Program's National Environmental Technology Test Sites program (Chapman and others, 1997). For this study, E-beam doses ranging from 0.015 to 0.14 kilowatt-hour per kilogram were evaluated along with H_2O_2 additions ranging from 0 to 1.2 grams per minute. Contaminants in the inlet air stream included cis-1,2-DCE; Freon 113; PCE; 1,1,1-TCA; TCE; and VC. The inlet contaminant concentrations have not been reported. The flow rate of the system was 1 m^3/min. VOC removals ranged from 48 to >99 percent, depending on the specific test conditions involved. The highest total VOC removal (>98 percent) was achieved when the irradiation dose was 0.036 kilowatt-hour per kilogram and H_2O_2 was added at 1.2 grams per minute.

Penetrante and others (1997, 1996a, 1996b) have compared the energy efficiencies associated with removing VOCs (benzene, carbon tetrachloride, ethylene, methanol, o-xylene, and toluene) using (1) the E-beam process and (2) the electrical discharge-based nonthermal plasma process. Hakoda and others (1998) have compared removals of VOCs (benzene, chlorobenzene, DCA, DCE, o-xylene, PCE, TCE, toluene, and VC) using (1) the E-beam process and (2) the gamma-ray process. The results of these studies are presented above in the electrical discharge-based nonthermal plasma process and gamma-ray process sections, respectively.

4.1.2 SVOC-Containing Air Stripper Off-Gas

No evaluations of commercial- or pilot-scale ANPO processes for treating SVOC-containing air stripper off-gas have been reported. However, SVOC-containing gas streams have been treated using an electrical discharge-based nonthermal plasma process at the bench-scale level. Removal of total SVOCs using a bench-scale silent discharge plasma system developed by the U.S. Department of Energy Los Alamos National Laboratory has been studied as part of the Strategic Environmental Research and Development Program's National Environmental Technology Test Sites program (Chapman and others, 1997). For this study, 40 pyrex glass chambers were used as the dielectric material in the reactor. The total SVOC concentration in the gas stream was 0.47 ppmv. The individual SVOCs present and their concentrations have not been reported. Also, the source of the gas stream used for the study is unspecified. The gas stream was dehumidified, and hydrogen gas was added at a ratio of one part hydrogen gas to one part SVOCs. Removals of >99 percent were achieved. HCl, hydrofluoric acid, phosgene, O_3, and dioxin were identified as reaction by-products.

Table 4-1. Summary of Air Stripper Off-Gas Treatment

PROCESS	CONTAMINANT CONCENTRATION	TEST CONDITIONS	RESULTS		COST (2000 U.S. dollars)	REFERENCE
			Percent Removal	Additional Information		
VOCs (Pilot Scale)						
E-beam	cis-1,2-DCE: 1.2 ppmv 1,1-DCA: 0.016 ppmv 1,1-DCE: 0.002 ppmv PCE: 0.58 ppmv 1,1,1-TCA: 0.34 ppmv TCE: 0.73 ppmv trans-1,2-DCE: 0.002 ppmv Total VOCs: about 3 ppmv	Flow rate: 1,000 m^3/hr Absorbed dose: 1.6 Mrads Beam power: 11 kW Temperature: unknown Reactor volume: unknown Residence time: 0.2 second	Total VOCs: About 90	By-products included chloroacetyl chlorides and phosgene	For a 100 m^3/hr system: \$0.28/m^3 of off-gas treated (including capital, depreciation, labor, electricity, activated carbon, and dry-sorption material costs)	Prager and others, 1998

4.2 Industrial Emission Treatment

The effectiveness of ANPO processes in treating industrial emissions has been evaluated for NO_x and SO_x and for metals. This section discusses ANPO treatment process effectiveness with regard to these contaminant groups. The operating conditions and performance results for each pilot-scale application discussed in Section 4.2 are summarized in Table 4-2 at the end of the section.

4.2.1 NO_x- and SO_x-Containing Industrial Emissions

This section discusses treatment of NO_x- and SO_x-containing industrial emissions using the E-beam process on a pilot-scale level. Information on sulfur dioxide (SO_2)-containing air treatment using the E-beam process at the bench-scale level is also included.

Pilot-Scale Applications

A pilot-scale E-beam system called the Process Development Unit (PDU) was developed by Ebara International Corporation (a predecessor company to Ebara Environmental Corporation) under a cost-sharing program with the U.S. Department of Energy. The PDU was field-tested using a slipstream of flue gas from Indianapolis Power and Light Company's E. W. coal-fired utility plant in Indianapolis, Indiana, U.S.A. (Frank and Hirano, 1993). The PDU consists of the following components: a spray cooler, E-beam system, retention chamber, baghouse, electrostatic precipitator, by-product storage system, and ammonia vaporizer system. Flue gas entering the PDU first passes through the spray cooler, where the gas is cooled and humidified. Ammonia gas is then injected into the gas stream by the ammonia vaporizer system, which converts liquid ammonia to the gas phase. After ammonia injection, the gas stream enters the E-beam system, which consists of a reaction chamber with two electron accelerators positioned on opposing sides of the chamber. The gas stream is then directed to the retention chamber in order to increase the time for chemical reactions to take place. By-products generated by the reactions are removed from the gas stream by a baghouse or by a combination of a baghouse and electrostatic precipitator.

During the field test, the primary contaminants in the flue gas included NO_x (220 to 540 ppmv) and SO_2 (400 to 2,800 ppmv). The molar ratio of ammonia to NO_x and SO_2 was 0 to 1.2. Each electron accelerator in the E-beam system generated an accelerating voltage of 800 keV. The beam power rating was 160 kW. In the reaction chamber, the dose rate ranged from 0 to 3.0 Mrads, the temperature ranged from 54 to 150 °C, and the flow rate ranged from 6.2 to 420 standard cubic meters per minute (scmm).

The PDU achieved about 95 percent SO_2 removal when the reaction chamber temperature ranged from 73 to 77 °C, the dose exceeded 0.9 Mrad, and the flow rates ranged from 110 to 130 scmm. NO_x removals of about 90 percent were achieved at higher temperatures (79 to 85 °C), higher doses (above 1.8 Mrads), and at flow rates ranging from 130 to 150 scmm. A reaction by-product mixture of ammonium nitrate and ammonium sulfate in powder form was observed. The by-product concentrations have not been reported.

Another pilot-scale E-beam system developed by Ebara Environmental Corporation and the Research Association for Abatement and Removal of NO_x in the Steel Industry (the association's managing company is Nippon Steel Corporation) was field-tested using exhaust gas from a sintering machine in a steel plant (Kawamura and others, 1980). The E-beam system consisted of a 2.6-m-diameter, vertical, hollow cylinder reaction chamber with two electron accelerators positioned on opposing sides of the chamber. The windows separating the accelerators from the contact chamber were made of a titanium-palladium alloy. The windows were cooled by passing cooling air through the contact chamber. At the chamber inlet, an impeller was used to rotate the gases in order to promote homogeneous distribution of the electron dose in the chamber. The system was designed to treat exhaust gas at flow rates ranging from 3,000 to 10,000 m^3/hr.

During the field test, the system was continuously operated for 1 month. Typical components of the exhaust gas during that period included NO_x (190 ppmv), SO_x (200 ppmv), O_2 (16 ppmv), CO_2 (16 ppmv), H_2O (10 ppmv), and dust particles (40 milligrams per cubic nanometer). The molar ratio of ammonia to NO_x and SO_x was 1.0. Each electron accelerator in the system generated an accelerating voltage of 600 keV and a beam current of 17 mA, resulting in a total beam power of 20 kW. In the reaction chamber, the dose was 1.5 Mrads; the temperature was 80 °C; and the flow rate was 3,000 m^3/hr.

NO_x removal of about 80 percent and SO_x removal of >95 percent were simultaneously achieved during the test period. In addition, the ammonia concentration was maintained between 10 and 50 ppmv. A reaction by-product mixture of

ammonium nitrate and ammonium sulfate in powder form was observed. The by-product concentrations have not been reported.

A pilot-scale E-beam system was developed by Research Cotrell under contract to the U.S. Department of Energy. This system was field-tested using a slipstream of electrical utility flue gas from coal-fired boilers at the Tennessee Valley Authority Shawnee Steam Plant in Paducah, Kentucky, U.S.A. (Helfritch, 1993). The purpose of the pilot program was to study the effects of using an alkali-slurry spray of hydrated lime to neutralize sulfuric and nitric acids generated when SO_2 and NO_x were irradiated with an E-beam. Components of the E-beam system included a spray dryer, E-beam unit, and fabric filter. Flue gas first passed through the spray dryer, where the gas was cooled and humidified by slurry evaporation and hydrated with lime in the form of fine particulate that became entrained in the gas. SO_2 reacted with calcium hydroxide in the spray dryer to form calcium sulfite. The gas was subsequently irradiated by an E-beam unit containing two electron accelerators, resulting in conversion of SO_2 and NO_x to sulfuric and nitric acids, respectively. The gas then passed through the fabric filter, where the sulfuric and nitric acids reacted with calcium hydroxide to produce calcium sulfate and nitrate.

The primary contaminants in the flue gas included SO_2 (400 to 2,500 ppmv) and NO_x (300 ppmv). In addition, the molar ratio of calcium hydroxide to (SO_2 + ½NO_x) ranged from 0.75 to 1.25. Each electron accelerator in the system generated an accelerating voltage of 750 keV and a beam current of 50 mA, resulting in a total beam power of 75 kW. In the reaction chamber, the dose ranged from 0 to 1.5 Mrads; the temperature ranged from 10 to 20 °C; and the flow rate was maintained at 6,800 m^3/hr.

Removals of SO_2 achieved by the spray dryer ranged from 50 to 80 percent. SO_2 removals in the E-beam unit ranged from 30 to 90 percent; higher SO_2 removals were observed with higher radiation doses and lower inlet SO_2 concentrations. The highest SO_2 removal (90 percent) was achieved when the inlet SO_2 concentration was 80 ppmv and the irradiation dose was 1.5 Mrads. SO_2 removal in the fabric filter ranged from 0 to 60 percent. NO_x removal occurred primarily in the E-beam unit. NO_x removals increased with increasing radiation doses and increasing SO_2 concentrations. The highest NO_x removal (80 percent) was achieved when the inlet air stream SO_2 concentration was 1,100 ppmv and the irradiation dose was 1.5 Mrads. Overall, the gas temperature, the gas water vapor content, and the molar ratio of lime to SO_2 and NO_x had minimal effect on E-beam removal of SO_x and NO_x. Reaction by-product information has not been reported.

Bench-Scale Study

Removal of high-concentration SO_2 (up to 15 percent) from a simulated flue gas by the E-beam process has been studied by Chmielewski and others (1996). For this study, a 0.2-m-diameter reactor chamber was used with an accelerating voltage of 770 keV and a beam current of 1.4 mA. The inlet SO_2 concentration was 30 ppmv. Additional components of the air stream included CO_2 (6.8 percent), nitrogen (76 percent), O_2 (8.7 percent), H_2O (7.5 to 8.5 percent), and NO_x (57 ppmv). Prior to irradiation, the following components were added to the air stream: SO_2 (up to 15 percent), ammonia (up to 30 percent), and H_2O (up to 20 percent). In the reactor, the temperature ranged from 105 to 118 °C, and the flow rate was maintained at 5 m^3/hr. SO_2 removal of 95 percent was achieved for the gas stream containing 10 percent SO_2, whereas 90 percent removal was achieved for the gas stream containing 15 percent SO_2. Also, SO_2 removals increased with increasing irradiation doses, ammonia doses, and humidity. No significant temperature effect was observed. Ammonium sulfate was identified as a reaction by-product.

4.2.2 Metal-Containing Industrial Emissions

No evaluations of commercial- or pilot-scale ANPO processes for treating metal-containing industrial emissions have been reported. However, metal-containing gas streams have been treated using an electrical discharge-based nonthermal plasma process at the bench-scale level. Removal of mercury vapor from a simulated flue gas by the corona discharge process has been studied by Helfritch and others (1996) at the bench-scale level. This study compares the mercury vapor removals achieved using a corona reactor with pulsed energization and with direct current energization. The air stream treated contained 30 micrograms per cubic meter of mercury vapor and up to 15 percent water vapor. More than 99 percent removal of mercury vapor was achieved using pulsed energization at an applied corona power of about 350 watts per cubic meter per minute, while 90 percent removal was achieved with direct current energization at the same energy density. Use of pulsed energization is believed to generate higher voltages and higher electric fields across the electrode gap because the short voltage pulses suppress formation of sparks.

Table 4-2. Summary of Industrial Emission Treatment

PROCESS	CONTAMINANT CONCENTRATION	TEST CONDITIONS	RESULTS		COST	REFERENCE
			Percent Removal	Additional Information		
NO_x and SO_x (Pilot Scale)						
E-beam	NO_x: 220 to 540 ppmv SO_2: 400 to 2,800 ppmv	Flow rate: 130 to 150 scmm (NO_x); 110 to 130 scmm (SO_2) Dose: >1.8 Mrads (NO_x); >0.9 Mrad (SO_2) Beam power: 160 kW Temperature: 79 to 85 °C (NO_x); 73 to 77 °C (SO_2) Reactor volume: unknown Retention time: unknown Molar ratio of ammonia to NO_x and SO_2: 0 to 1.2	NO_x: 90 SO_2: 95	Treatment of flue gas from Indianapolis Power and Light Company's E.W. coal-fired utility plant in Indianapolis, Indiana, U.S.A. By-products included ammonium nitrate and ammonium sulfate	Unknown	Frank and Hirano, 1993
	NO_x: 190 ppmv SO_x: 200 ppmv	Flow rate: 3,000 m^3/hr Dose: 1.5 Mrads Beam power: 20 kW Temperature: 80 °C Reactor volume: unknown Retention time: unknown Molar ratio of ammonia to NO_x and SO_x: 1.0	NO_x: 80 SO_x: >95	Treatment of exhaust gas from a sintering machine in a steel plant. By-products included ammonium nitrate and ammonium sulfate	Unknown	Kawamura and others, 1980
	NO_x: 300 ppmv SO_2: 80 ppmv	Flow rate: 6,800 m^3/hr Dose: 1.5 Mrads Beam power: 75 kW Temperature: 10 to 20 °C Reactor volume: unknown Retention time: unknown Molar ratio of calcium hydroxide to (SO_2 + ½NO_x): 0.75 to 1.25	NO_x: 80 (at an SO_2 concentration of 1,100 ppmv) SO_2: 90	Treatment of electrical utility flue gas from coal-fired boilers at the Tennessee Valley Authority Shawnee Steam Plant in Paducah, Kentucky, U.S.A.	Unknown	Helfritch, 1993

4.3 Automobile Emission Treatment

No evaluations of commercial- or pilot-scale ANPO processes for treating automobile emissions have been reported. However, automobile emissions have been treated using the electrical discharge-based nonthermal plasma process at the bench-scale level. Fanick and Bykowski (1994) evaluate the effectiveness of simultaneously removing NO_x, particulate matter, and CO from the exhaust of two light-duty, diesel-engine vehicles using the electrical discharge-based nonthermal plasma process. An older, indirect-injection truck and a newer, direct-injection truck were used. The plasma was generated using a ferroelectric bed reactor packed with barium titanate ceramic beads. Reactor flow rates were varied from 1 to 15 L/min (space velocities of 1,400 to 20,000 per hour). NO_x removal efficiencies exceeded 40 percent at most space velocities below 7,000 per hour. Particulate removal efficiencies exceeded 60 percent in most cases but decreased with increasing space velocity. CO was produced by reactions in the reactor; the amount of CO produced decreased with increasing space velocity.

Shimizu and Oda (1997) have studied the effectiveness of removing NO_x at high temperatures (400 to 500 °C) using the electrical discharge-based nonthermal plasma process combined with catalysts. The effect of hydrocarbon addition on NO_x removal was also evaluated. The catalysts tested included copper-doped zeolite; vanadium pentoxide-doped TiO_2; and a conventional, three-way, honeycomb catalyst (palladium- and rhodium-doped aluminum coated on cordierite, honeycomb mesh). The initial composition of the synthetic flue gas used for the study was as follows: NO_x (400 ppmv), O_2 (10 percent), and CO_2 (10 percent). The gas flow rate was maintained at 2 L/min. The highest removal efficiency for NO_x (>99 percent) was achieved using the zeolite catalyst at 300 °C with hydrocarbon (ethylene 0.5 percent) addition and an input power of about 10 W. Even without nonthermal plasma, NO_x removal efficiencies of >80 percent were achieved at about 300 °C with hydrocarbon addition.

4.4 References

Amirov, R.H., E.I. Asinovsky, and I.S. Samoilov. 1997. "Ferroelectric Packed Bed Reactor for Non-Thermal Plasma Treatment of Effluent Gas." *Proceedings, 14th Symposium on Plasma Processing.* Nara, Japan. January. Pages 208 through 210.

Chapman, T.E., P.H. Mook, Jr., and K.B. Wong. 1997. "A Comparison of Innovative Air Pollution Control Technology Demonstrations at McClellan Air Force Base." *Proceedings, Air and Waste Management Association's 90th Annual Meeting and Exhibition.* Toronto, Ontario, Canada. June 8 through 13. Pages 1 through 15.

Chmielewski, A.G., Z. Zimek, S. Bulka, J. Licki, G. Piderit, L. Villanueva, and L. Ahumada. 1996. "Electron Beam Treatment of Flue Gas with High Content of SO_2." *Journal of Advanced Oxidation Technologies.* Volume 1, Number 2. Pages 142 through 149.

Fanick, E.R., and B.B. Bykowski. 1994. "Simultaneous Reduction of Diesel Particulate and NO_x Using a Plasma." *Proceedings, Society of Automotive Engineers (SAE) International Fuels and Lubricants Meeting and Exposition.* Baltimore, Maryland. October 17 through 20. Volume 1053. Pages 239 through 246.

Frank, N.W., and S. Hirano. 1993. "The History of Electron Beam Processing for Environmental Pollution Control and Work Performed in the United States." *Nonthermal Plasma Techniques for Pollution Control, Part A: Overview, Fundamentals, and Supporting Technologies.* NATO ASI Series, Series G: Ecological Sciences. Volume 32, Part B. Edited by B.M. Penetrante and S.E. Schwtheis. Springer-Verlag, Berlin, Germany. Pages 1 through 26.

Hakoda, T., M. Yang, K. Hirota, and S. Hashimoto. 1998. "Decomposition of Volatile Organic Compounds in Air by Electron Beam and Gamma Ray Irradiation." *Journal of Advanced Oxidation Technologies.* Volume 3, Number 1. Pages 79 through 86.

Helfritch, D.J. 1993. "SO_2 and NO_x Removal from Flue Gas by Means of Lime Spray Dryer Followed by Electron Beam Irradiation." *Nonthermal Plasma Techniques for Pollution Control Part A: Overview, Fundamentals, and Supporting Technologies.* NATO ASI Series, Series G: Ecological Sciences. Volume 32, Part B. Edited by B.M. Penetrante and S.E. Schwtheis. Springer-Verlag, Berlin, Germany. Pages 33 through 46.

Helfritch, D.J., G. Harmon, and P. Feldman. 1996. "Mercury Vapor Control by Means of Corona Discharge." *Emerging Solutions to VOC & Air*

Toxics. Proceedings of Specialty Conference Sponsored by Air & Waste Management Association. Clearwater Beach, Florida. February 28 through March 1. Pages 277 through 288.

Kawamura, K., S. Aoki, H. Kimura, K. Adachi, K. Kawamura, T. Katayama, K. Kengaku, and Y. Sawada. 1980. "Pilot Plant Experiment on the Treatment of Exhaust Gas from a Sintering Machine by Electron Beam Irradiation." *Environmental Science & Technology.* Volume 14, Number 9. Pages 288 through 294.

Penetrante, B.M., M.C. Hsiao, B.T. Merritt, G.E. Vogtlin, A. Kuthi, C.P. Burkhart, and J.R. Bayless. 1997. "Comparison of Pulsed Corona and Electron Beam Processing of Hazardous Air Pollutants." *Journal of Advanced Oxidation Technologies.* Volume 2, Number 2. Pages 299 through 305.

Penetrante, B.M., M.C. Hsiao, J.N. Bardsley, B.T. Merritt, G.E. Vogtlin, and P.H. Wallman. 1996a. "Electron Beam and Pulsed Corona Processing of Volatile Organic Compounds in Gas Streams." *Pure and Applied Chemistry.* Volume 68, Number 5. Pages 1083 through 1087.

Penetrante, B.M., M.C. Hsiao, J.N. Bardsley, B.T. Merritt, G.E. Vogtlin, P.H. Wallman, A. Kuthi, C.P. Burkhart, and J.R. Bayless. 1996b. "Comparison of Non-Thermal Plasma Techniques for Abatement of Volatile Organic Compounds and Nitrogen Oxides." *Emerging Solutions to VOC & Air Toxics.* Proceedings of Specialty Conference Sponsored by Air & Waste Management Association. Clearwater Beach, Florida. February 28 through March 1. Pages 240 through 251.

Prager, L., R. Mehnert, A. Sobottka, H. Langguth, W. Baumann, H. Matzing, H.-R. Paur, J. Schubert, R. Rashid, K.M. Taba, H.-P. Schuchmann, and C. von Sonatag. 1998. "Electron Beam Degradation of Chlorinated Hydrocarbons Air-stripped from Polluted Ground Water: a Laboratory and Field Study." *Journal of Advanced Oxidation Technologies.* Volume 3, Number 1. Pages 87 through 97.

Shimizu, K., and T. Oda. 1997. "DeNO$_x$ Process in Flue Gas Combined with Non-thermal Plasma and Catalyst." *Proceedings, 32nd IEEE Industry Applications Conference.* Part 3 (of 3). New Orleans, Louisiana. October 5 through 9. Pages 1942 through 1949.

Section 5
Contaminated Soil Treatment

ANPO processes have been demonstrated to be effective in treating contaminated soil. ANPO has been applied to only one solid matrix, contaminated soil; no information on ANPO process application to other solid matrices such as contaminated sediment or ash is available in the literature. Collectively, ANPO has been applied to the following types of soil-bound contaminants: (1) VOCs, (2) SVOCs, (3) PCBs, (4) pesticides and herbicides, (5) dioxins, and (6) explosives and their degradation products. This section discusses ANPO treatment process effectiveness with regard to each of these contaminant groups.

To assist the environmental practitioner in selection of an ANPO system to treat contaminated soil, this section includes (1) commercial-scale system evaluation results for the Fenton process and (2) pilot-scale evaluation results for the Fenton process. This section also presents supplemental information from bench-scale studies of ANPO processes.

As discussed in Section 1.2, Section 5 organizes performance and cost data for the contaminated soil matrix first by contaminant group, then by scale of evaluation (commercial, pilot, or bench), and finally by ANPO system or process. In general, commercial- and pilot-scale applications are discussed in detail. Such discussions include, as available, a system description, operating conditions, performance data, and system costs presented in 2000 U.S. dollars. Bench-scale studies of ANPO processes are described in less detail and only if they provide information that supplements commercial- and pilot-scale evaluation results. The level of detail provided for bench-scale studies varies depending on the information source. For example, percent removals and test conditions are not specified for some of the bench-scale studies because such information is unavailable in the sources.

At the end of this section, a table is provided that summarizes results for each commercial- and pilot-scale application discussed in the text. The references cited in Section 5 are listed in Section 5.7.

5.1 VOC-Contaminated Soil

This section discusses treatment of VOC-contaminated soil using the Fenton process on a commercial scale. Information is also included on VOC-contaminated soil treatment using the Fenton process at the bench-scale level.

Commercial-Scale Applications

This section summarizes the effectiveness of the Geo-Cleanse® in situ and ex situ Fenton treatment systems in removing the following VOCs from contaminated soil.

ANPO Process	VOCs Removed
• Fenton	• 1,2-DCE; methylene chloride; 2-methyl-naphthalene; naphthalene; PCE; petroleum hydro-carbons (gasoline range organics [GRO]); TCE; VC; BTEX

Geo-Cleanse® In Situ Fenton System

A Geo-Cleanse® in situ Fenton treatment system was used to treat VOC-contaminated sandy soil beneath a helicopter refueling area at the Wright Army Airfield in Fort Stewart, Georgia, U.S.A. The system consisted of six injector wells: four in the unsaturated zone (about 3.6 to 4.9 m bgs) and two in the saturated zone (about 6.1 to 7.3 m bgs).

Pretreatment soil samples were collected from two locations: S-1 and S-2. The primary VOC contaminants at S-1 included 2-methylnaphthalene (290 micrograms per kilogram [µg/kg]), naphthalene (210 µg/kg), petroleum hydrocarbons (GRO) (58,000 µg/kg), benzene (440 µg/kg), toluene (210 µg/kg), ethylbenzene (3,000 µg/kg), and xylenes (10,000 µg/kg). The primary VOC contaminants at S-2 included 2-methylnaphthalene (190 µg/kg), petroleum hydrocarbons (GRO) (270,000 µg/kg), toluene (92 µg/kg), ethylbenzene (390 µg/kg), and xylenes (100 µg/kg). SVOC contaminants present in site soil included petroleum hydrocarbons (diesel range organics [DRO]); system performance results for these SVOCs are discussed in Section 5.2. About 9,500 L of 50 percent H_2O_2; 83 L of 66 percent H_2SO_4; 8 L of 85 percent H_3PO_4; and 54 kg of $FeSO_4$ were injected into the subsurface over a 4-day period. The amount of stabilizer (calcium phosphate) used is unknown. The subsurface pH was 6.0.

The Geo-Cleanse® system treated about 210 m^3 of contaminated soil. After a treatment time of 6 days, the removal efficiencies achieved by the system indicated that treatment had been locally effective. At location S-1, the following removal efficiencies were achieved: 2-methylnaphthalene, >99 percent; naphthalene, >99 percent; petroleum hydrocarbons (GRO), 99 percent; benzene, >99 percent; toluene, >99 percent; ethylbenzene, 83 percent; and xylenes, 86 percent. At location S-2, the following removal efficiencies were achieved: petroleum hydrocarbons (GRO), 23 percent; toluene, >99 percent; ethylbenzene, >99 percent; and xylenes, 32 percent. However, the 2-methylnaphthalene concentration at S-2 increased by 560 percent, and naphthalene, which was not detected at S-2 in the pretreatment sample analysis, was present at 380 µg/kg in treated soil samples. The limited data available is inadequate to explain why soil treatment was more effective at S-1 than at S-2. The estimated treatment cost was about $74,000, which includes equipment rental, reagent, mobilization, and labor costs (Geo-Cleanse, 2000).

In another application, a Geo-Cleanse® in situ Fenton treatment system was used to treat VOC-contaminated soil (predominantly clay) beneath former waste lagoons at the Anniston Army Depot in Anniston, Alabama, U.S.A. The system consisted of 255 injectors positioned horizontally across a 3-acre area and vertically in four different layers of the subsurface.

The primary contaminant in the soil was TCE, which was present at 22,000 milligrams per kilogram (mg/kg). About 500,000 L of 50 percent H_2O_2; 1,100 L of 66 percent H_2SO_4; and 360 kg of $FeSO_4$ were injected into the subsurface over a period of 155 days. H_3PO_4 was not injected during this application. The amount of stabilizer (calcium phosphate) used is unknown. The subsurface pH was 5.5.

The Geo-Cleanse® system treated about 33,000 m^3 of contaminated soil. The system achieved >99 percent removal of TCE. The total treatment time is unknown. The estimated treatment cost was about $2 million, which includes equipment rental, reagent, mobilization, and labor costs (Geo-Cleanse, 2000).

Geo-Cleanse® Ex Situ Fenton System

A Geo-Cleanse® ex situ Fenton treatment system was used to treat VOC-contaminated soil (predominantly clay) from the Anniston Army Depot in Anniston, Alabama, U.S.A. Geo-Cleanse treated 75 55-gallon drums (about 16 m^3) of soil collected from drill cuttings. Based on analytical results for seven pretreatment soil samples collected from seven drums, the primary contaminants in the soil included 1,2-DCE (<5 to 6,300 µg/kg, or an average of 1,800 µg/kg); methylene chloride (27 to 20,000 µg/kg, or an average of 3,500 µg/kg); PCE (<5 to 4,300 µg/kg, or an average of 690 µg/kg); TCE (3 to 200,000 µg/kg, or an average of 43,000 µg/kg); and VC (<10 to 40 µg/kg, or an average of 15 µg/kg). About 2,600 L of 50 percent H_2O_2; 38 L of 66 percent H_2SO_4; 38 L of H_3PO_4; and 4.5 kg of $FeSO_4$ were applied over a 3-day period. The amount of stabilizer (calcium phosphate) used is unknown. The soil pH was 5.5.

The system achieved >99 percent removals for all the contaminants. The total treatment time is unknown. These results are based on a comparison of the average pretreatment sample concentrations and the contaminant concentrations detected in one composite soil sample collected from eight random locations in a borrow pit where the treated soil was placed. The estimated treatment cost was about $39,000, which includes equipment rental, reagent, mobilization, and labor costs (Geo-Cleanse, 2000).

Bench-Scale Studies

This section summarizes bench-scale study results for use of the Fenton process to remove the following VOCs from synthetic soil matrices.

ANPO Process	VOCs Removed
• Fenton	• PCE; TCE

Leung and others (1992) have evaluated the effectiveness of the Fenton process in removing PCE at the bench-scale level. For the study, 3.5 grams of sand was spiked with PCE at a concentration of 1,000 mg/kg. The PCE was completely mineralized in 3 hours; at that time 17.5 mL of 2.1 M H_2O_2 and 1.4 mL of 0.005 M $FeSO_4$ were added to the spiked sand, and the initial pH was adjusted to 3.

Wang and Brussea (1998) have evaluated the ability of pyrophosphate to maintain iron in solution and thus enhance removal of PCE by the Fenton process. For this study, 20 grams of sandy soil was spiked with PCE at a concentration of 80,000 mg/kg. With addition of 2 mL of 30 percent H_2O_2, 100 mL of 10 mM $FeSO_4$, and 100 mL of 10 to 30 mM pyrophosphate, and at a pH ranging from about 5 to 6, a PCE removal of about 18 percent was achieved.

In the absence of pyrophosphate, minimal PCE removal (<5 percent) was observed.

Ravikumar and Gurol (1992) have evaluated the effect of external $FeSO_4$ addition when TCE-contaminated soil was treated using the Fenton process in a column study. The soil used for the study was coarse-grained sand with a low organic content (400 mg/kg) and an iron content of 800 mg/kg. The column was about 4 cm in diameter and 85 cm long. The volume of soil in the column was about 1 L. With an initial TCE amount of 1.1 millimoles in the soil, 65 percent removal of TCE was achieved using 2.65 millimoles of H_2O_2 alone; however, use of 1.76 millimoles of H_2O_2 and 0.1 millimole of $FeSO_4$ resulted in 77 percent removal of TCE. The pH of the system has not been reported. On a molar basis, H_2O_2 treatment generated 0.70 mole of chloride per mole of H_2O_2 and Fenton's reagent generated 1.32 moles of chloride per mole of H_2O_2. The greater amount of chloride liberation resulting from treatment with Fenton's reagent is a strong indication that Fenton's reagent is more effective in oxidizing TCE in soil than H_2O_2 alone.

5.2 SVOC-Contaminated Soil

This section discusses treatment of SVOC-contaminated soil using the Fenton process on a commercial scale. Information is also included on SVOC-contaminated soil treatment using the Fenton process at the pilot- and bench-scale levels.

Commercial-Scale Applications

This section summarizes the effectiveness of the Geo-Cleanse®, ISOTEC™, and H&H SSCO™ Fenton treatment systems in removing the following SVOCs from contaminated soil.

ANPO Process	SVOCs Removed
• Fenton	• PAHs; PCP; petroleum hydrocarbons

Geo-Cleanse® In Situ Fenton System

A Geo-Cleanse® in situ Fenton treatment system was used to treat SVOC-contaminated sandy soil beneath a helicopter refueling area at the Wright Army Airfield in Fort Stewart, Georgia, U.S.A. The system consisted of six injector wells: four in the unsaturated zone (about 3.6 to 4.9 m bgs) and two in the saturated zone (about 6.1 to 7.3 m bgs). Pretreatment soil samples were collected from two locations: S-1 and S-2. The primary SVOC contaminants at S-1 and S-2 were petroleum hydrocarbons (DRO), which were present at 270,000 and 100,000 µg/kg, respectively. VOC contaminants present in the soil included 2-methylnaphthalene, naphthalene, petroleum hydrocarbons (GRO), and BTEX; system performance results for these VOCs are discussed in Section 5.1. For the demonstration, about 9,500 L of 50 percent H_2O_2; 83 L of 66 percent H_2SO_4; 8 L of 85 percent H_3PO_4; and 54 kg of $FeSO_4$ were injected into the subsurface over a 4-day period. The amount of stabilizer (calcium phosphate) used is unknown. The subsurface pH was 6.0.

The Geo-Cleanse® system treated about 210 m^3 of contaminated soil. After a 6-day treatment period, the removal efficiencies achieved indicated localized treatment effectiveness. At location S-1, the removal efficiency for petroleum hydrocarbons (DRO) was about 98 percent. However, at location S-2, the petroleum hydrocarbon (DRO) concentration increased by 450 percent. The limited data available is inadequate to explain why soil treatment was more effective at S-1 than at S-2. The estimated treatment cost was about $74,000, which includes equipment rental, reagent, mobilization, and labor costs (Geo-Cleanse, 2000).

In another application, a Geo-Cleanse® in situ Fenton treatment system was used to treat SVOC-contaminated soil (predominantly glacial till) beneath a manufactured gas plant in Burlington, Wisconsin, U.S.A. The system had nine injectors positioned in the subsurface, and the primary contaminant in the soil was PAH.

The initial PAH concentrations in soil at two locations, M/V-4 and M/V-5, were 26 and 72 mg/kg, respectively. About 30,000 L of 50 percent H_2O_2; 570 L of 66 percent H_2SO_4; 45 L of 85 percent H_3PO_4; and 23 kg of $FeSO_4$ were injected into the subsurface over a 8-day period. The amount of stabilizer (calcium phosphate) used is unknown. The subsurface pH was 7.0.

The Geo-Cleanse® system treated about 450 m^3 of contaminated soil. The system achieved total PAH removals of 98 and 96 percent at M/V-4 and M/V-5, respectively. The total treatment time is unknown. The estimated treatment cost was about $130,000, which includes equipment rental, reagent, mobilization, and labor costs (Geo-Cleanse, 2000).

ISOTEC™ Fenton System

An ISOTEC™ in situ Fenton treatment system was used to treat petroleum hydrocarbon-contaminated soil beneath a private residence in New Jersey, U.S.A. The type of fuel that contaminated the soil is unknown. The petroleum hydrocarbons in the soil are assumed to have been weathered, and most of the volatile contamination is assumed to have been lost. As a result, the petroleum hydrocarbons that remained are assumed to have been SVOCs. The initial petroleum hydrocarbon concentration in soil was 14,000 mg/kg. The geology of the contaminated area consisted of fractured bedrock. The subsurface pH is unknown.

The system had 10 injection wells positioned vertically and horizontally within the contaminated area, which was 9.1 m wide, 9.1 m long, and 2.1 m deep. Reagent application was conducted for a total of 12 days over a period of 2 months. A total of 4,300 L of 8.75 percent H_2O_2 and 8,600 L of proprietary catalyst (organometallic [iron] complex solution) were injected into the subsurface.

Within 30 days after the final round of injection activities had been completed, the petroleum hydrocarbon concentration had been reduced by 96 percent. The treatment goal of <1,000 mg/kg was achieved, and the site was issued a no further action letter by the New Jersey Department of Environmental Protection 4 months after treatment activities began. The estimated treatment cost was about $73,000, which includes equipment, reagent, mobilization and demobilization, and labor costs (ISOTEC, 2000).

H&H SSCO™ Fenton System

An H&H SSCO™ ex situ Fenton treatment system was used to treat SVOC-contaminated soil excavated from a soil remediation site in Minnesota, U.S.A. H&H treated 990 m^3 of soil, which was predominantly sand and silt with a high level of peat moss. The primary contaminants in the soil included carcinogenic PAHs (680 mg/kg) and PCP (160 mg/kg). The soil pH before treatment was 5.5.

Fe(0) was applied to soil windrows during the first pass by the Microenfractionator™; the amount of Fe(0) added corresponded to 1 percent of the total weight of the soil to be treated (10,000 mg/kg). After a 24-hour stabilization period, a second pass was made by the Microenfractionator™, during which 50 percent H_2O_2 was applied to the soil; the amount of H_2O_2 added corresponded to 1 percent of the total weight of the soil to be treated (10,000 mg/kg). Two additional H_2O_2 treatments were performed 3 and 6 weeks after the initial H_2O_2 treatment.

Within 60 days after the initial H_2O_2 treatment, the system had achieved >85 percent removal of carcinogenic PAHs, and the treatment goal of <100 mg/kg was achieved. PCP concentrations were reduced to nondetectable levels, and the treatment goal of <100 mg/kg was achieved. According to H&H, the soil pH was unchanged after treatment. The estimated treatment cost was about $74/$m^3$ of soil treated, which includes capital, reagent, mobilization and demobilization, and labor costs (H&H, 2000).

In another application, an H&H SSCO™ ex situ Fenton treatment system was used to treat petroleum hydrocarbon-contaminated soil excavated from a service station tank farm in Alberta, Canada. The type of fuel that contaminated the soil is unknown. The petroleum hydrocarbons in the soil are assumed to have been weathered, and most of the volatile contamination is assumed to have been lost. As a result, the petroleum hydrocarbons that remained are assumed to have been SVOCs. H&H treated 1,500 m^3 of soil, which was predominantly coarse-grained sand. Petroleum hydrocarbons in the soil (at 8,000 mg/kg) included hydrocarbons in the gasoline and diesel ranges; however, on average, most of the hydrocarbons were in the diesel range. The soil pH before treatment was 6.2.

Fe(0) was applied to soil windrows during the first pass by the Microenfractionator™; the amount of Fe(0) added corresponded to 1 percent of the total weight of the soil to be treated (10,000 mg/kg). A second pass was immediately made by the Microenfractionator™, during which 50 percent H_2O_2 was applied to the soil; the amount of H_2O_2 added corresponded to 0.5 percent of the total weight of the soil to be treated (5,000 mg/kg).

Within 36 hours after the H_2O_2 treatment, the system had achieved >88 percent removal of petroleum hydrocarbons, and the treatment goal of <1,000 mg/kg was achieved. According to H&H, the soil pH was unchanged after treatment. The estimated treatment cost was about $43/$m^3$ of soil treated, which includes capital, reagent, mobilization and demobilization, and labor costs (H&H, 2000).

An H&H SSCO™ ex situ Fenton treatment system was also used to treat petroleum hydrocarbon-contaminated soil excavated from an oil field in Alberta, Canada. H&H treated 400 m^3 of soil, which was predominantly clay. Petroleum hydrocarbons in the soil (at 8,500 mg/kg) included

hydrocarbons in the diesel to crude range. The soil pH before treatment was 6.2.

Fe(0) was applied to soil windrows during the first pass by the Microenfractionator™; the amount of Fe(0) added corresponded to 1 percent of the total weight of the soil to be treated (10,000 mg/kg). After a 24-hour stabilization period, a second pass was made by the Microenfractionator™, during which 50 percent H_2O_2 was applied to the soil; the amount of H_2O_2 added corresponded to 0.5 percent of the total weight of the soil to be treated (5,000 mg/kg). Two additional H_2O_2 treatments were performed 4 and 8 days after the initial H_2O_2 treatment.

Within 12 days after the initial H_2O_2 treatment, the system had achieved >88 percent removal of petroleum hydrocarbons, and the treatment goal of <1,000 mg/kg was achieved. According to H&H, the soil pH was unchanged after treatment. The estimated treatment cost was about $73/m^3 of soil treated, which includes capital, reagent, mobilization and demobilization, and labor costs (H&H, 2000).

Pilot-Scale Applications

This section presents pilot-scale evaluation results for removal of the following SVOCs from soil using the Fenton process.

ANPO Process	SVOCs Removed
• Fenton	• PAHs; petroleum hydrocarbons

A pilot-scale bioslurry system was field-demonstrated by International Technology Corporation under the U.S. EPA's Superfund Innovative Technology Evaluation Program in 1994 (U.S. EPA, 1997; International Technology Corporation, 1995). The system was used to remove PAHs and carcinogenic PAHs from soil and combined biological treatment with the Fenton process. The system consisted of two 60-L, TEKNO Associates, aerobic bioslurry reactors and a 10-L reactor operated in semicontinuous, plug flow mode. The first 60-L reactor (R1) was designed to remove easily biodegradable carbon and to increase biological activity against the more resistant PAHs (those with three or more rings). Slurry from the first reactor was fed to the 10-L reactor (R2), where Fenton's reagent was added to accelerate oxidation of four-to six-ring PAHs. The second 60-L reactor (R3) was used as a polishing reactor to remove any partially oxidized contaminants remaining in the system. Slurry was removed from R3 and clarified using gravity settling techniques. The soil used for the demonstration was collected from a wood treating facility and contained sand (30 percent) and clay (70 percent).

Under optimal operating conditions, the total PAH and carcinogenic PAH concentrations in the soil slurry were about 320 and 65 mg/kg, respectively. For the demonstration, PAH-contaminated slurry was wet-sieved through a 30-mesh screen and blended so as to contain 40 percent solids (30 percent contaminated soil and 10 percent uncontaminated clay). The flow rates in the reactors were 6 L/day (R1 and R2) and 8 L/day (R3). The hydraulic retention times in the reactors were 20 days (R1), 2 days (R2), and 15 days (R3); the total hydraulic retention time in the system was 37 days. The temperature in all three reactors was maintained at about 25 °C. Fenton's reagent (a 1:1 volumetric ratio of 30 percent H_2O_2 and 0.0084 M ferrous sulfate heptahydrate) was added at a rate of about 2 L/day. The pH in R2, where the Fenton process occurred, was maintained at 2, whereas the pH in R1 and R3 was maintained at about 7.

The system achieved an approximately 95 percent reduction in the total PAH concentration and an approximately 84 percent reduction in the carcinogenic PAH concentration over a total hydraulic retention time of 37 days. Individually, R1 achieved 87 ± 1 percent removal of PAHs and 65 ± 4 percent removal of carcinogenic PAHs. R2 achieved 45 ± 13 percent removal of PAHs and 49 ± 12 percent removal of carcinogenic PAHs. R3 achieved 3.9 ± 6.0 percent removal of PAHs and 0.42 ± 1.0 percent removal of carcinogenic PAHs.

Also at the pilot scale, Watts (1992) has studied the effectiveness of treating petroleum hydrocarbon-contaminated soil using the Fenton process with no iron addition. The study was performed ex situ using 0.96-m^3 batches of soil in 55-gallon drums. The soil used was an arid soil with low organic carbon content, low manganese oxide content, and an unspecified amount of naturally occurring iron minerals. During the study, 17 m^3 of soil was treated. Initial petroleum hydrocarbon concentrations ranged from nondetectable levels to 6,900 mg/kg. The petroleum hydrocarbon was primarily composed of high-molecular-weight molecules. The study was performed using a 2 or 7 percent dose of 50 percent H_2O_2, with no iron addition, and at a pH of 3. Over a period of 1 to 3 days, the system achieved the treatment goal (100 mg/kg) with two additions of both the 2 and 7 percent H_2O_2 doses. No percent removals have been reported. The estimated treatment cost based

on the 2 percent H_2O_2 dose was about $44/m^3 of soil treated, which includes only the cost of the H_2O_2.

Bench-Scale Studies

This section discusses the effectiveness of the Fenton process in treating soil contaminated with the following SVOCs at the bench-scale level.

ANPO Process	SVOCs Removed
• Fenton	• Acenaphthene; acenaphthylene; anthracene; benzo(a)-anthracene; benzo(b)-fluoranthene; chrysene; fluoranthene; fluorene; hexadecane; naphthalene; PCP; phenanthrene; pyrene

Kawahara and others (1995) have evaluated the effectiveness of using the Fenton process to treat soil slurries contaminated with various PAHs; the slurries were collected from a wood treating facility. The soil composition by weight was as follows: gravel, 24 percent; sand, 22 percent; silt, 37 percent; and clay, 18 percent. The PAHs in the soil included acenaphthene (750 µg/kg), acenaphthylene (10 µg/kg), anthracene (1,500 µg/kg), benzo(a)anthracene (350 µg/kg), benzo(b)fluoranthene (200 µg/kg), chrysene (350 µg/kg), fluoranthene (1,700 µg/kg), fluorene (600 µg/kg), naphthalene (20 µg/kg), phenanthrene (1,700 µg/kg), and pyrene (1,200 µg/kg). Soil slurries consisting of 10 grams of contaminated soil and 30 mL of water were treated with 40 mL of Fenton's reagent (30 percent H_2O_2 and 0.009 M $FeSO_4$ mixed in equal proportions). The untreated soil pH was 7. PAH removals ranged from 72 percent (naphthalene) to 93 percent (acenaphthene).

Ravikumar and Gurol (1992) have evaluated the effect of external $FeSO_4$ addition when PCP-contaminated soil was treated using the Fenton process in a soil column study. The soil used for the study was coarse-grained sand with a low organic content (400 mg/kg) and an iron content of 800 mg/kg. The column was about 4 cm in diameter and 85 cm long. The volume of the soil in the column was about 1 L. With an initial PCP concentration of 0.53 millimole in the soil, 73 percent removal of PCP was achieved using 2.65 millimoles H_2O_2 alone, whereas use of 1.76 millimoles H_2O_2 and 0.1 millimole $FeSO_4$ resulted in 77 percent removal of PCP. The pH of the system has not been reported. On a molar basis, H_2O_2 treatment generated 0.59 mole chloride per mole of H_2O_2, and Fenton's reagent generated 1.06 moles chloride per mole of H_2O_2. The higher chloride liberation resulting from treatment with Fenton's reagent is a strong indication that Fenton's reagent is more effective in oxidizing PCP in soil than H_2O_2 alone.

Watts and others (1990) have evaluated the effectiveness of removing PCP in soil slurries using the Fenton process. Three types of soils (silica sand and two natural soils) were used. The organic carbon content (0.05 versus 0.58 percent) was the major difference between the natural soils. For the study, 2.5 grams of soil was spiked with 12.5 mL of 65 percent H_2O_2 and 1 mL of $FeSO_4$ such that the concentration of Fe(II) in the soil slurry was 480 mg/L. The initial pH of the slurry was adjusted to between 2 and 8 using H_2SO_4. The highest removal of PCP (>99 percent) was achieved for the silica sand with a reaction time of 24 hours and a pH of 3. The optimum pH for all three soil types was in the range of 2 to 3. The study also evaluated the effect of iron additions. Under optimal pH conditions, the PCP treatment efficiency (that is, the ratio of the contaminant degradation rate to the H_2O_2 consumption rate) was greater in systems that (1) had a lower organic carbon content and (2) did not receive iron amendments.

Tyre and others (1991) have studied the effectiveness of removing PCP and hexadecane from soil using the Fenton process. The soil used was a gravelly, loamy, coarse sand with organic carbon concentrations ranging from 2,000 to 16,000 mg/kg; iron oxide concentrations ranging from 7,800 to 8,800 mg/kg; and a manganese oxide concentration of 200 mg/kg. For the study, 2.5 grams of soil was spiked with 200 mg/kg each of PCP and hexadecane. The soil was treated with 12.5 mL of 13 percent H_2O_2 and 1 mL of $FeSO_4$ or deionized water such that the Fe(II) concentration in the soil was 0, 200, or 400 mg/L. Soil slurry treatment was conducted at a pH of 3. PCP removal rates decreased as a function of the soil organic carbon content, whereas no such effect on hexadecane removal rates was observed. The removal efficiency ratios (that is, the ratios of the contaminant removal rate constant to the H_2O_2 degradation rate constant) were highest for treatment with no iron addition. According to the researchers, these results suggest that iron minerals in soil and H_2O_2 cause Fenton process-like oxidation to occur. This hypothesis was verified by demonstrating PCP removal in silica sand spiked

with iron minerals (goethite, hemotite, and magnetite).

5.3 PCB-Contaminated Soil

No evaluations of commercial- or pilot-scale ANPO processes for removing PCBs from soil have been reported. However, PCB-contaminated soil has been treated using the Fenton and gamma-ray processes at the bench-scale level. This section summarizes the results of bench-scale studies of the effectiveness of the Fenton and gamma-ray processes in removing the following PCBs from soil.

ANPO Process	PCB Removed
• Fenton	• Aroclor 1248
• Gamma-ray	• Aroclor 1260

Fenton

The effectiveness of the Fenton process in removing Aroclor 1248 from a clayey humic soil from the Texas Eastern Gas Pipeline site in Danville, Kentucky, U.S.A., was studied by the International Technology Corporation under the U.S. EPA Superfund Innovative Technology Evaluation Program (U.S. EPA, 1995; International Technology Corporation, 1995). At initial PCB concentrations ranging from 5,000 to 10,000 µg/kg, minimal PCB removal (0 to 55 percent) was achieved. The highest PCB removal (55 percent) was achieved when the percent moisture was 8.4; the pH was maintained at 2.5; the Fe(II) dose was 100 mg/kg; the H_2O_2 dose was 18,000 mg/kg; and the retention time was 118 hours. PCB removal was more effective for less chlorinated congeners (dichlorinated and trichlorinated biphenyls) than for more chlorinated congeners.

Gamma-Ray

Curry and others (1998) have evaluated the effectiveness of the gamma-ray process in treating soil spiked with Aroclor 1260 at the bench-scale level. For initial PCB concentrations of 58 and 200 mg/kg, high doses (100 Mrads) were required to achieve >81 and >68 percent removals, respectively. The researchers speculate that the soil surface may have acted as an electron scavenger or may not have allowed diffusion of aqueous electrons.

5.4 Pesticide- and Herbicide-Contaminated Soil

No evaluations of commercial-scale ANPO processes for removing pesticides or herbicides from soil have been reported. However, the Fenton process has been evaluated in terms of pesticide and herbicide removal at the pilot- and bench-scale levels. The results of these evaluations are summarized below.

Pilot-Scale Application

A pilot-scale Fenton system was field-tested using soil contaminated with organophosphorous compounds (disulfoton and thiometon) and oxadixyl (Egli and others, 1992). The system influent, which was generated by an on-site soil washing system, contained about 3.5 and 0.3 mg/L of total organophosphorous compounds and oxadixyl, respectively. During the field test, the system was operated using an H_2O_2 dose of 1,000 mg/L; a $FeSO_4$ dose of 50 mg/L; a flow rate of 30 m^3/hr (corresponding to a retention time of 40 to 46 minutes); a pH of 3.0; and a temperature of 50 °C. The system achieved removals of about 94 percent for total organophosphorous compounds in 2 hours. Over the same period, the oxadixyl concentration was reduced to nondetectable levels, representing >80 percent removal.

Bench-Scale Studies

This section summarizes the results of bench-scale studies of the effectiveness of the Fenton process in removing the following pesticides and herbicides from synthetic soil matrices.

ANPO Process	Pesticide or Herbicide Removed
• Fenton	• Dieldrin; pendimethalin; trifluralin

Miller and others (1996) found that pendimethalin could be removed from soil slurries using the Fenton process. The highest pendimethalin removal (99 percent) was achieved when the soil to water ratio was 0.2 on a weight basis; the H_2O_2 dose was 360,000 mg/kg of soil; the Fe(II) dose was 2,000 mg/kg of soil; and the pH was maintained between 2 and 3. Moreover, the study showed that the Fenton process can remove the inhibitory effect that pendimethalin has on biodegrading microorganisms. Also, the Fenton process was

shown to release BOD, COD, TOC, and nitrate ions into solution. The organic matter released into solution was biodegradable and served as a substrate for subsequent microbial growth.

Tyre and others (1991) have studied the effectiveness of removing dieldrin and trifluralin from soil using the Fenton process. The soil used was a gravelly, loamy, coarse sand with organic carbon concentrations ranging from 2,000 to 16,000 mg/kg; iron oxide concentrations ranging from 7,800 to 8,800 mg/kg; and a manganese oxide concentration of 200 mg/kg. For the study, 2.5 grams of soil was spiked with 200 mg/kg each of dieldrin and trifluralin. The soil was treated with 12.5 mL of 13 percent H_2O_2 and 1 mL of $FeSO_4$ or deionized water such that the Fe(II) concentration in the soil was 0, 200, or 400 mg/L. Soil slurry treatment was conducted at a pH of 3. Trifluralin removal rates decreased as a function of the soil organic carbon content, whereas no such effect on dieldrin removal rates was observed. The removal efficiency ratios (that is, the ratios of the contaminant removal rate constant to the H_2O_2 degradation rate constant) were highest for treatment with no iron addition. According to the researchers, these results suggest that iron minerals in soil and H_2O_2 cause Fenton process-like oxidation to occur.

5.5 Dioxin-Contaminated Soil

No evaluations of commercial-scale ANPO processes for removing dioxins from soil have been reported. However, the Fenton process has been evaluated in terms of dioxin removal at the pilot- and bench-scale levels. The results of these evaluations are summarized below.

Pilot-Scale Application

A pilot-scale in situ Fenton system has been field-tested using 2,3,7,8-tetrachlorodibenzo-p-dioxin (TCDD)-contaminated soil (Hu and others, 2000). The system employed was a proprietary injection method designed to inject reagents under pressure. The soil in the test area was predominantly sand; the pH of the soil has not been reported. The TCDD concentrations in the test area (which was 0.61 m wide, 0.61 m long, and 1.2 m deep) decreased with depth, ranging from 240 µg/kg between 0 and 5.1 cm bgs to 2.4 µg/kg between 117 and 122 cm bgs. For the field test, Fenton's reagent was added in five steps over 2 consecutive days: (1) 230 L of 5 percent H_2O_2 at a flow rate of 60 L/hr; (2) 230 L of 2,000 mg/L Fe(II) at a flow rate of 450 L/hr; (3) 110 L of 35 percent H_2O_2 at a flow rate of 450 L/hr; (4) 230 L of 1,000 mg/L Fe(II) at a flow rate of 450 L/hr; and (5) 1,900 L of 35 percent H_2O_2 at a flow rate of 470 L/hr. The interval between consecutive steps was about 8 hours. The system achieved TCDD removals ranging from about 73 to >99; TCDD concentrations were reduced to nondetectable levels (<0.3 µg/kg) in most depth intervals.

Bench-Scale Study

Watts and others (1991) have evaluated the effectiveness of removing octachlorodibenzo-p-dioxin (OCDD) in soil using the Fenton process at the bench-scale level. For the study, 1 gram of soil was spiked with OCDD at 200 µg/kg. The soil was treated with 2 mL of either 3.5 or 35 percent H_2O_2 and 0.1 millimole of $FeSO_4$. Removals of OCDD ranged from about 75 to 96 percent; the removal efficiency was inversely proportional to the organic carbon content of the soil. The highest removal (96 percent) was achieved when 35 percent H_2O_2 was used and the organic carbon content was 2 percent. To achieve 96 percent removal, the reaction proceeded until the H_2O_2 was depleted, and then the reaction was repeated two more times. OCDD removal generally increased with increasing temperature and H_2O_2 concentration. Temperatures of 20, 40, 60, and 80 °C were used. At 20 °C, OCDD removals of about 10 and 20 percent were achieved with use of 3.5 and 35 percent H_2O_2, respectively. However, at 80 °C, OCDD removals of about 80 and 85 percent were achieved with use of 3.5 and 35 percent H_2O_2, respectively.

5.6 Explosive- and Degradation Product-Contaminated Soil

No evaluations of commercial-scale ANPO processes for removing explosives and their degradation products from soil have been reported. However, the Fenton process has been evaluated in terms of explosive and degradation product removal at the pilot- and bench-scale levels. The results of these evaluations are summarized below.

Pilot-Scale Application

A pilot-scale Fenton system was field-tested using TNT-contaminated soil from the former Nebraska Ordnance Plant in Mead, Nebraska, U.S.A. (Arienzo and others, 1998). The system consisted of three units: (1) the soil sample preparation unit, (2) the soil slurry treatment unit, and (3) the soil dewatering unit. The soil used for the field test was a Charpsburg silty loam (20 percent sand, 44 percent silt, and

36 percent clay) that had a pH of 7.5 and an organic carbon content of 1.9 percent.

TNT was the primary contaminant of concern and was present in the soil at 400 mg/kg. For the field test, TNT-contaminated soil was sieved to a particle size of 0.1 cm in the sample preparation unit. In the soil slurry treatment unit, 12 kg of soil from the sample preparation unit was combined with 60 L of water to produce a soil slurry with 20 percent solids. O_2 was supplied by dissolving compressed air in the slurry using bubble diffusers. The pH of the slurry was adjusted to 3.0 using 60 mL of H_2SO_4. Fenton's reagent was added in one, four, or eight additions. When Fenton's reagent was added in one batch, H_2O_2 and Fe(II) were added such that their concentrations were 1 percent and 640 mg/L in the reaction mixture, respectively. During the alternate modes of operation, the total amount of Fenton's reagent was divided into four or eight equal amounts that were supplied to the treatment unit at predetermined time intervals. The temperature in the slurry treatment unit was maintained in the range of 34 to 38 °C. Following the addition of Fenton's reagent, the soil slurry was dewatered in the dewatering unit using a porous, stainless-steel filter. Soil in the form of a soft sludge-cake was removed from the filter, air-dried, sieved to a particle size of 0.2 cm, and subsampled for TNT analysis. Leachate from the filter was also subsampled for TNT analysis. The highest removal (98 percent) of TNT achieved by the system occurred when Fenton's reagent was supplied in eight additions (one every 4 hours) and the total treatment time was 36 hours. The soil treatment goal of 17 mg/kg was achieved, and the concentration of TNT in the leachate from the soil dewatering unit filter was minimal (<2 mg/L).

Bench-Scale Study

Bier and others (1999) have evaluated the effectiveness of removing RDX in soil slurry using the Fenton process at the bench-scale level. Contaminated soil was collected for the study from a former drainage ditch adjacent to a former munitions production building at the Nebraska Ordnance Plant in Mood, Nebraska, U.S.A. The concentration of RDX in soil ranged from 900 to 1,500 mg/kg. The soil slurry was prepared by mixing soil and H_2O at a proportion of 1 gram of soil and 5 mL of H_2O. The H_2O_2 concentration in the slurry was either 0.59 or 1.18 M, and the Fe(II) concentration was 0.003 M. The temperature was maintained at either 25 or 45 °C. At an initial RDX concentration of 1,300 mg/kg, >99 percent removal was achieved through stepwise addition of Fenton's reagent over 48 hours at a temperature of 45 °C. CO_2, formic acid, ammonium, and nitrate ions were identified as reaction by-products.

Table 5-1. Summary of Contaminated Soil Treatment

PROCESS (SYSTEM)	CONTAMINANT CONCENTRATION	TEST CONDITIONS	RESULTS		COST (2000 U.S. dollars)	REFERENCE
			Percent Removal	Additional Information		
VOCs (Commercial Scale)						
Fenton (Geo-Cleanse®)	2-Methylnaphthalene: 290 µg/kg Naphthalene: 210 µg/kg Petroleum hydrocarbons (GRO): 58,000 µg/kg Benzene: 440 µg/kg Toluene: 210 µg/kg Ethylbenzene: 3,000 µg/kg Xylenes: 10,000 µg/kg	H_2O_2 (50%): 9,500 L H_2SO_4 (66%): 83 L H_3PO_4 (85%): 8 L $FeSO_4$: 54 kg Calcium phosphate: unknown Subsurface pH: 6.0 Injection time: 4 consecutive days Treatment time: 6 days	2-Methylnaphthalene: >99 Naphthalene: >99 Petroleum hydrocarbons (GRO): 99 Benzene: >99 Toluene: >99 Ethylbenzene: 83 Xylenes: 86	In situ treatment of about 210 m^3 of soil (predominantly sand) at Wright Army Airfield in Fort Stewart, Georgia, U.S.A.	$74,000 (including equipment rental, reagent, mobilization, and labor costs)	Geo-Cleanse, 2000
	TCE: 22,000 mg/kg	H_2O_2 (50%): 500,000 L H_2SO_4 (66%): 1,100 L H_3PO_4: none $FeSO_4$: 360 kg Calcium phosphate: unknown Subsurface pH: 5.5 Injection time: 155 consecutive days Treatment time: unknown	>99	In situ treatment of about 33,000 m^3 of soil (predominantly clay) at Anniston Army Depot in Anniston, Alabama, U.S.A.	$2 million (including equipment rental, reagent, mobilization, and labor costs)	
	1,2-DCE: 1,800 µg/kg Methylene chloride: 3,500 µg/kg PCE: 690 µg/kg TCE: 43,000 µg/kg VC: 15 µg/kg	H_2O_2 (50%): 2,600 L H_2SO_4 (66%): 38 L H_3PO_4: 38 L $FeSO_4$: 4.5 kg Calcium phosphate: unknown Soil pH: 5.5 Injection time: 3 consecutive days Treatment time: unknown	>99	Ex situ treatment of about 16 m^3 of soil (predominantly clay) at Anniston Army Depot in Anniston, Alabama, U.S.A.	$39,000 (including equipment rental, reagent, mobilization, and labor costs)	
SVOCs (Commercial Scale)						
Fenton (Geo-Cleanse®)	S-1 Petroleum hydrocarbons (DRO): 270,000 µg/kg S-2 Petroleum hydrocarbons (DRO): 100,000 µg/kg	H_2O_2 (50%): 9,500 L H_2SO_4 (66%): 83 L H_3PO_4 (85%): 8 L $FeSO_4$: 54 kg Calcium phosphate: unknown Subsurface pH: 6.0 Injection time: 4 consecutive days Treatment time: 6 days	S-1 98 S-2 Concentration increased by 450%	In situ treatment of about 210 m^3 of soil (predominantly glacial till) at Wright Army Airfield in Fort Stewart, Georgia, U.S.A.	$74,000 (including equipment rental, reagent, mobilization, and labor costs)	Geo-Cleanse, 2000

Table 5-1. Summary of Contaminated Soil Treatment (Continued)

PROCESS (SYSTEM)	CONTAMINANT CONCENTRATION	TEST CONDITIONS	RESULTS		COST (2000 U.S. dollars)	REFERENCE
			Percent Removal	Additional Information		
SVOCs (Commercial Scale) (Continued)						
Fenton (Geo-Cleanse®) (Continued)	M/V-4 PAHs: 26 mg/kg M/V-5 PAHs: 72 mg/kg	H_2O_2 (50%): 30,000 L H_2SO_4 (66%): 570 L H_3PO_4 (85%): 45 L $FeSO_4$: 23 kg Calcium phosphate: unknown Subsurface pH: 7.0 Injection time: 8 consecutive days Treatment time: unknown	M/V-4 98 M/V-5 96	In situ treatment of about 450 m^3 of soil (predominantly glacial till) at a manufactured gas plant in Burlington, Wisconsin, U.S.A.	$130,000 (including equipment rental, reagent, mobilization, and labor costs)	Geo-Cleanse, 2000
Fenton (ISOTEC™)	Petroleum hydrocarbons: 14,000 mg/kg	H_2O_2 (8.75%): 4,300 L Proprietary catalyst (organometallic [iron] complex solution): 8,600 L Subsurface pH: unknown Injection time: 12 days over 2 months Treatment time: 30 days after final injection	96	In situ treatment of soil (predominantly fractured bedrock) at a private residence in New Jersey, U.S.A.; volume of soil treated is unknown Treatment goal of <1,000 mg/kg was achieved; site was issued received no further action letter by New Jersey Department of Environmental Protection 4 months after treatment activities began	$73,000 (including equipment, reagent, mobilization and demobilization, and labor costs)	ISOTEC, 2000
Fenton (H&H SSCO™)	Carcinogenic PAHs: 680 mg/kg PCP: 160 mg/kg	H_2O_2 (50%): 10,000 mg/kg Fe(0): 10,000 mg/kg Soil pH: 5.5 Reagent applications: three over 6 weeks Treatment time: 60 days after the initial H_2O_2 treatment	Carcinogenic PAHs: >85 PCP: Nondetectable level	Ex situ treatment of about 990 m^3 of soil (predominantly sand and silt with high levels of peat moss) in Minnesota, U.S.A. Treatment goals for carcinogenic PAHs (<100 mg/kg) and PCP (<100 mg/kg) were achieved	$74/$m^3$ of soil treated (including capital, reagent, mobilization and demobilization, and labor costs)	H&H, 2000

Table 5-1. Summary of Contaminated Soil Treatment (Continued)

PROCESS (SYSTEM)	CONTAMINANT CONCENTRATION	TEST CONDITIONS	RESULTS		COST (2000 U.S. dollars)	REFERENCE
			Percent Removal	Additional Information		
SVOCs (Commercial Scale) (Continued)						
Fenton (H&H SSCO™) (Continued)	Petroleum hydrocarbons: 8,000 mg/kg	H_2O_2 (50%): 5,000 mg/kg Fe(0): 10,000 mg/kg Soil pH: 6.2 Reagent applications: one Treatment time: 36 hours after the initial H_2O_2 treatment	>88	Ex situ treatment of about 1,500 m^3 of soil (predominantly coarse-grained sand) from a service station tank farm in Alberta, Canada Treatment goal of <1,000 mg/kg was achieved	$43/$m^3$ of soil treated (including capital, reagent, mobilization and demobilization, and labor costs)	H&H, 2000
	Petroleum hydrocarbons: 8,500 mg/kg	H_2O_2 (50%): 5,000 mg/kg Fe(0): 10,000 mg/kg Soil pH: 6.2 Reagent applications: three over 8 days Treatment time: 12 days after the initial H_2O_2 treatment	>88	Ex situ treatment of about 400 m^3 of soil (predominantly clay) from an oilfield in Alberta, Canada Treatment goal of <1,000 mg/kg was achieved	$73/$m^3$ of soil treated (including capital, reagent, mobilization and demobilization, and labor costs)	
SVOCs (Pilot Scale)						
Fenton	Total PAHs: 320 mg/kg Carcinogenic PAHs: 65 mg/kg	Bioslurry Reactor (R1) Reactor volume: 60 L Flow rate: 6 L/day Retention time: 20 days pH: 7 Fenton Reactor (R2) Reactor volume: 10 L Flow rate: 6 L/day Retention time: 2 days Fenton's reagent (1:1 volumetric ratio of 30% H_2O_2 and 0.0084 M $FeSO_4$): 24 L/day pH: 2 Bioslurry Reactor (R3) Reactor volume: 60 L Flow rate: 8 L/day Retention time: 15 days pH: 7	R1 Total PAHs: 87±1 Carcinogenic PAHs: 65±4 R2 Total PAHs: 45±13 Carcinogenic PAHs: 49±12 R3 Total PAHs: 3.9±6.0 Carcinogenic PAHs: 0.42±1.0	Ex situ treatment of soil (70% clay and 30% sand) from a wood-treating facility. System combined Fenton process with biological treatment; system consisted of a bioslurry reactor (R1), a reactor for the Fenton process (R2), and a bioslurry reactor for polishing (R3)	Unknown	U.S. EPA, 1997; International Technology Corporation, 1995

Table 5-1. Summary of Contaminated Soil Treatment (Continued)

PROCESS (SYSTEM)	CONTAMINANT CONCENTRATION	TEST CONDITIONS	RESULTS		COST (2000 U.S. dollars)	REFERENCE
			Percent Removal	Additional Information		
SVOCs (Pilot Scale)						
Fenton (Continued)	Petroleum hydrocarbons: nondetectable level to 6,900 mg/kg	H_2O_2(50%): 2 or 7% Iron: naturally occurring iron minerals in soil (amount unknown) Soil slurry pH: 3 Reactor volume: 0.96 m^3 Retention time: 1 to 3 days	Unknown	Ex situ treatment of 17 m^3 of arid soil with low organic carbon and manganese oxide concentration Treatment goal of 100 mg/kg was achieved	\$44/m^3 of soil treated (including only cost of 2% H_2O_2 dose)	Watts, 1992
Pesticides and Herbicides (Pilot Scale)						
Fenton	Total organophosphorous compounds (disulfoton and thiometon): 3.5 mg/L Oxadixyl: 0.3 mg/L	H_2O_2: 1,000 mg/L $FeSO_4$: 50 mg/L Soil slurry pH: 3.0 Flow rate: 30 m^3/hr Retention time: 40 to 46 minutes Temperature: 50 °C	Total organophosphorous compounds (disulfoton and thiometon): 94 Oxadixyl: >80	Ex situ treatment of soil (70% clay and 30% sand) from a soil washing system	Unknown	Egli and others, 1992
Dioxin (Pilot Scale)						
Fenton	TCDD: 240 µg/kg	Five injections over 2 consecutive days: Injection 1 H_2O_2 (5%): 230 L Flow rate: 60 L/hr Injection 2 Fe(II) (2,000 mg/L): 230 L Flow rate: 450 L/hr Injection 3 H_2O_2 (35%): 110 L Flow rate: 450 L/hr Injection 4 Fe(II) (1,000 mg/L) : 230 L Flow rate: 450 L/hr Injection 5 H_2O_2 (35%): 1,900 L Flow rate: 470 L/hr	>99	In situ treatment of sandy soil	Unknown	Hu and others, 2000

Table 5-1. Summary of Contaminated Soil Treatment (Continued)

PROCESS (SYSTEM)	CONTAMINANT CONCENTRATION	TEST CONDITIONS	RESULTS		COST (2000 U.S. dollars)	REFERENCE
			Percent Removal	Additional Information		
Explosives and Degradation Products (Pilot Scale)						
Fenton	TNT: 400 mg/kg	Fenton's reagent addition in eight steps H_2O_2: 1% Fe(II): 640 mg/L Soil slurry pH: 3.0 Reactor volume: unknown Treatment time: 36 hours	98	Ex situ treatment of soil (20% sand, 44% silt, 36% clay) from former Nebraska Ordnance Plant in Mead, Nebraska, U.S.A. Treatment goal of 17 mg/kg was achieved	Unknown	Arienzo and others, 1998

5.7 References

Arienzo, M., S.D. Comfort, M. Zerkoune, Z.M. Li, and P.J. Shea. 1998. "Pilot-Scale Devices for Remediation of Munitions Contaminated Soils." *Journal of Environmental Science and Health, Part A: Toxic-Hazardous Substances & Environmental Engineering*. Volume 33, Number 8. November. Pages 1515 through 1531.

Bier, Eleanor L., Jasbir Singh, Zhengming Li, Steve D. Comfort, and Patrick J. Shea. 1999. "Remediating Hexahydro-1,3,5-Trinitro-1,2,5-Trazine[*sic*]-Contaminated Water and Soil by Fenton Oxidation." *Environmental Toxicology and Chemistry*. Volume 18, Number 6. June. Pages 1078 through 1084.

Curry, R.D., T. Clevenger, O. Stancu-Ciolac, W.H. Miller, J. Farmer, B.J. Mincher, and S. Kapila. 1998. "Decontamination of Soil Contaminated with Aroclor 1260 Using a Solvent Extraction Process and γ-Ray Radiolysis." *Journal of Advanced Oxidation Technologies*. Volume 3, Number 1. Pages 55 through 62.

Egli, S., S. Lomanto, R. Galli, R. Fitzi, and C. Munz. 1992. "Oxidative Treatment of Process Water in a Soil Decontamination Plant: II. Pilot Plant and Large Scale Experiences." *Chemical Oxidation: Technologies for the Nineties*. Volume 2. Edited by W.W. Eckenfelder, A.R. Bowers, and J.A. Roth. Technomic Publishing Co., Inc. Lancaster, Pennsylvania. Pages 264 through 277.

Geo-Cleanse International, Inc. (Geo-Cleanse). 2000. Correspondence Regarding Case Studies on Geo-Cleanse® Fenton Process. From Matt Dingens, Vice President. To Suzette Tay, Environmental Scientist, Tetra Tech EM Inc.

H&H Eco Systems, Incorporated (H&H). 2000. Correspondence Regarding Case Studies on ISOTEC Fenton Process. From Terry Horn, President. To Suzette Tay, Environmental Scientist, Tetra Tech EM Inc.

Hu, H., G.D. Hitchens, D. Hodko, T.D. Rogers, M.L. Madigan, B.K. Carnley, and R.N. Reeves. 2000. "In-Situ Remediation of Tetrachloro-dibenzo-p-Dioxin (TCDD) Contaminated Soils Using Fenton's Reagent." Unpublished.

In-Situ Oxidative Technologies, Inc. (ISOTEC). 2000. Correspondence Regarding Case Studies on ISOTEC™ Fenton Process. From Dave Zervas, President. To Suzette Tay, Environmental Scientist, Tetra Tech EM Inc.

International Technology Corporation. 1995. "Site Emerging Technologies Program, EO6 Bioslurry Treatment, Final Report." Prepared for U.S. Environmental Protection Agency National Risk Management Research Laboratory.

Kawahara, Fred K., Brunilda Davila, Souhail R. Al-Abed, Stephen J. Vesper, John C. Ireland, and Steve Rock. 1995. "Polynuclear Aromatic Hydrocarbon (PAH) Release from Soil During Treatment with Fenton's Reagent." *Chemosphere*. Volume 31, Number 9. Pages 4131 through 4142.

Leung, Solomon W., Richard J. Watts, and Glenn C. Miller. 1992. "Degradation of Perchloroethylene by Fenton's Reagent: Speciation and Pathway." *Journal of Environmental Quality*. Volume 21. Pages 377 through 381.

Miller, Christopher M., Richard L. Valentine, Marc E. Roehl, and Pedro J.J. Alvarez. 1996. "Chemical and Microbiological Assessment of Pendimethalin-contaminated Soil after Treatment with Fenton's Reagent." *Water Research*. Volume 30, Number 11. Pages 2579 through 2586.

Ravikumar, J.X., and M.D. Gurol. 1992. "Fenton's Reagent as a Chemical Oxidant for Soil Contaminants." *Chemical Oxidation: Technologies for the Nineties*. Volume 2. Edited by W.W. Eckenfelder, A.R. Bowers, and J.A. Roth. Technomic Publishing Co., Inc. Lancaster, Pennsylvania. Pages 206 through 216.

Tyre, Bryan W., Richard J. Watts, and Glenn C. Miller. 1991. "Treatment of Four Biorefractory Contaminants in Soils Using Catalyzed Hydrogen Peroxide." *Journal of Environmental Quality*. Volume 20. October-December. Pages 832 through 838.

U.S. Environmental Protection Agency (U.S. EPA). 1995. "Superfund Innovative Technology Evaluation, Emerging Technology Summary: Bench-Scale Testing of Photolysis, Chemical Oxidation, and Biodegradation of PCB Contaminated Soils, and Photolysis of TCDD Contaminated Soils." Office of Research and Development Superfund Innovative Technology

Evaluation (SITE) Program. Washington, DC. EPA/540/S R-94/531. March.

U.S. EPA. 1997. "Superfund Innovative Technology Evaluation, Emerging Technology Summary: Innovative Methods for Bioslurry Treatment." Office of Research and Development. SITE Program. Washington, DC. EPA/540/S R-96/505. August.

Wang, X., and M.L. Brussea. 1998. "Effect of Pyrophosphate on the Dechlorination of Tetrachloroethene by the Fenton Reaction." *Environmental Toxicology and Chemistry*. Volume 17, Number 9. Pages 1689 through 1694.

Watts, R.J., M.D. Udell, P.A. Rauch, and S.W. Leung. 1990. "Treatment of Pentachlorophenol-Contaminated Soils Using Fenton's Reagent." *Hazardous Waste & Hazardous Materials*. Volume 7, Number 4. Pages 335 through 345.

Watts, Richard J., B. Randy Smith, and Glenn C. Miller. 1991. "Catalyzed Hydrogen Peroxide Treatment of Octachlorodibenzo-p-Dioxin (OCDD) in Surface Soils." *Chemosphere*. Volume 24, Number 7. Pages 949 through 955.

Watts, R.J. 1992. "Hydrogen Peroxide for Physicochemically Degrading Petroleum-Contaminated Soils." *Remediation*. Autumn. Pages 413 through 425.

APPENDIX

TECHNOLOGY VENDOR CONTACT INFORMATION

Applied Process Technology, Inc.
Mr. Charles Borg
233 Sansome Street, Suite 1108
San Francisco, CA 94104
Telephone: (415) 675-7280
Internet: www.aptwater.com

Chematur Engineering AB
Mr. Lars Stenmark
Box 430
S-691 27 Karlskoga
Sweden
Telephone: 46-586-641-00
Internet: www.chematur.se

General Atomics
Mr. Michael H. Spritzer
3550 General Atomics Court
San Diego, CA 92121
Telephone: (858) 455-3000
Internet: www.gat.com

Geo-Cleanse International, Inc.
Mr. Matthew M. Dingens
4 Mark Road, Suite C
Kenilworth, NJ 07033
Telephone: (908) 206-1250
Internet: www.geocleanse.com

H&H Eco Systems, Inc.
Mr. Terry D. Horn
P.O. Box 38
505 Evergreen Drive
North Bonneville, WA 98639
Telephone: (509) 427-7353
Internet: www.hheco.com

High Voltage Environmental Applications, Inc.
Dr. William J. Cooper
601 South College Road
Wilmington, NC 28403
Telephone: (910) 962-2387
Internet: Under construction

In-Situ Oxidative Technologies, Inc.
Mr. Luis Moreno
3858 Benner Road
Miamisburg, OH 45342
Telephone: (800) 448-9760
Internet: www.isotec.com

Mantech Environmental Corporation
Dr. Timothy A. Hall
6300 West Loop South, Suite 500
Houston, TX 77401
Telephone: (713) 585-7000
Internet: www.mantech.com

Oxidation Systems, Inc.
Dr. Joseph A. Pisani
250 West Colorado Boulevard, Suite 190
Arcadia, CA 91007
Telephone: (626) 446-1482
Internet: Under construction

United States
Environmental Protection
Agency

National Risk Management
Research Laboratory
Cincinnati, OH 45268

Official Business
Penalty for Private Use
$300

EPA/625/R-01/004
July 2001

Please make all necessary changes on the below label, detach or copy, and return to the address in the upper left-hand corner.

If you do not wish to receive these reports CHECK HERE ☐; detach, or copy this cover, and return to the address in the upper left-hand corner.

PRESORTED STANDARD
POSTAGE & FEES PAID
EPA
PERMIT No. G-35