EPA

Development Document for Proposed Effluent Limitations Guidelines and New Source Performance Standards for the

PHOSPHORUS DERIVED CHEMICALS

Segment of the Phosphate Manufacturing Point Source Cataegory

UNITED STATES ENVIRONMENTAL PROTECTION AGENCY

AUGUST 1973

Publication Notice

This is a development document for proposed effluent limitations guidelines and new source performance standards. As such, this report is subject to changes resulting from comments received furing the period of public comments of the proposed regulations. This document in its final form will be published at the time the regulations for this industry are promulgated.

DEVELOPMENT DOCUMENT

for

PROPOSED EFFLUENT LIMITATIONS GUIDELINES

and

NEW SOURCE PERFORMANCE STANDARDS

for the

PHOSPHORUS DERIVED CHEMICALS SEGMENT OF THE PHOSPHATE MANUFACTURING POINT SOURCE CATEGORY

John Quarles
Acting Administrator

Robert L. Sansom
Assistant Administrator for Air & Water Programs

Allen Cywin
Director, Effluent Guidelines Division

Elwood E. Martin
Project Officer

August, 1973

Effluent Guidelines Division
Office of Air and Water Programs
U.S. Environmental Protection Agency
Washington, D. C. 20460

ABSTRACT

A study was made of the phosphate manufacturing point source category by the General Technologies Corporation for the Environmental Protection Agency, for the purpose of developing effluent limitation guidelines, Federal standards of performance, and pretreatment standards for the industry, to implement Sections 304, 306 and 307 of the Federal Water Pollution Control Act Amendments of 1972.

For the purpose of this study, the phosphate manufacturing industry was defined as the manufacture of the following chemicals: phorphorus (and by-product ferrophosphorus), phosphoric acid (dry process only), phosphorus pentoxide, phosphorus pentasulfide, phosphorus trichloride, phosphorus oxychloride, sodium tripolyphosphate and the calcium phosphates.

Effluent limitation guidelines were developed as a result of this study, defining the degree of effluent reduction attainable through the application of the best practicable control technology currently available and the best available technology economically achievable which must be achieved by existing point sources by July 1, 1977 and July 1, 1983, respectively.

The standards of performance for new sources, were also defined.

Except for PCl_3 and $POCl_3$ manufacture, the recommended best practicable control technologycurrently available for the entire industry is no discharge of process waste water pollutants to navigable waters. The quantitative limitations upon each type of pollution parameter permitted for PCl_3 and $POCl_3$ manufacturing discharges were defined; they are basically the remaining constituents after waste water neutralization and removal of suspended solids. No harmful materials may be discharged.

Application of the best available technology economically achievable and best demonstrated technology for treating dissolved solids would enable the PCl_3 and $POCl_3$ manufacturing operations to achieve no discharge of waste water pollutants.

CONTENTS

Section		Page
I	CONCLUSIONS	1
II	RECOMMENDATIONS	3
III	INTRODUCTION	5
IV	INDUSTRY CATEGORIZATION	41
V	WATER USE AND WASTE CHARACTERIZATION	45
VI	SELECTION OF POLLUTION PARAMETERS	69
VII	CONTROL AND TREATMENT TECHNOLOGY	77
VIII	COST, ENERGY AND NON-WATER QUALITY ASPECTS	107
IX	EFFLUENT REDUCTION ATTAINABLE THROUGH THE APPLICATION OF THE BEST PRACTICABLE CONTROL TECHNOLOGY CURRENTLY AVAILABLE, EFFLUENT GUIDELINES AND LIMITATIONS	123
X	EFFLUENT REDUCTION ATTAINABLE THROUGH THE APPLICATION OF THE BEST AVAILABLE TECHNOLOGY ECONOMICALLY ACHIEVABLE EFFLUENT GUIDELINES AND LIMITATIONS	137
XI	NEW SOURCE PERFORMANCE STANDARDS AND PRETREATMENT RECOMMENDATIONS	143
XII	ACKNOWLEDGEMENTS	149
XIII	REFERENCES	151
XIV	GLOSSARY	157

FIGURES

Number	Title	Page
1	Flow of Materials in the Phosphates Manufacturing Industry	9
2	Standard Phosphorus Process Flow Diagram	16
3	Standard Phosphoric Acid Flow Diagram (Dry Process)	22
4	Variations of Phosphoric Acid (Dry Process)	24
5	Phosphorus Pentoxide Manufacture Flow Diagram	27
6	Phosphorus Pentasulfide Manufacture Flow Diagram	29
7	Phosphorus Trichloride Manufacture Flow Diagram	31
8	Standard Process for Phosphorus Oxychloride Manufacture	33
9	Alternate Process for Phosphorus Oxychloride Manufacture	34
10	Standard Process for Sodium Tripolyphosphate Manufacture	36
11	Standard Process for Food-Grade Calcium Phosphates	38
12	Manufacture of Livestock-Feed Calcium Phosphate Flow Diagram	39

TABLES

Number	Title	Page
1	Recommended Best Practicable Control Technology Currently Available for the Manufacture of Phosphorus Trichloride and Phosphorus Oxychloride	3
2	U.S. Production of Phosphates	12
3	Current Selling Prices of Phosphorus Chemicals	13
4	Producers of Phosphate Products	14
5	Impurities in Phosphoric Acid	21
6	Composition of Commercial Phosphates Rocks	51
7	Summary of Raw Waste from Phosphorus Manufacture	56
8	Minor Wastes from Plant 037 (PCl_3 and $POCl_3$)	61
9	Summary of Raw Wastes from Phosphorus Consuming Plants	65
10	Summary of Raw Wastes from Phosphate Plants	68
11	Waste Water Constituents of Phosphate Category	74
12	Relative Chemical Costs for Neutralizing Acid Wastes	86
13	Summary of Control and Treatment Techniques at Phosphorus Producing Plants	88
14	Effluent from Plant 028	89
15	Effluent from Plant 159	90
16	Water Quality Produced by Various Ion Exchange Systems	100
17	Treatment Alternatives	108
18	Treatment Alternatives, Cost-Effluent Quality Comparison	109
19	Energy Requirements for Recommended Guidelines	121
20	Metric Units Conversion Table	160

SECTION I

CONCLUSIONS

For the purpose of establishing effluent limitations guidelines and standards of performance, the phosphate manufacturing point source category was divided into the phosphorus production, the phosphorus consuming subcategory, and the phosphates subcategories.

Phosphorus and phosphoric acid production were included in this study because they are necessary prequesites to phosphate synthesis. It is also appropriate from technical standpoints to include these chemicals in this study rather than in the inorganic chemical point source category. Other phosphorus consuming chemicals such as PCl_3 and P_2O_5 were included for the same reasons. Processes solely concerned with phosphates to be used as fertilizers are studied under the fertilizer point source category.

The phosphorus-production subcategory of the industry is characterized by large quantities of raw process wastes, including highly deleterious phossy water and highly-acidic scrubber and quenching waste waters, both containing large quantities of fluorides, other dissolved solids, and suspended solids. Through a combination of in-process controls and end-of- process treatment, several plants within this segment have achieved zero discharge of phossy water, two have achieved zero discharge of other process waste waters, and one has achieved zero discharge of any waste water. While other plants now demonstrate abatement practices resulting in 97 percent or greater reduction in the raw waste load before discharge, the total recycle of process water without any discharge has been aptly demonstrated using the best practicable control technology.

The phorphorus-consuming subcategory of the industry is characterized by the absence of direct process waste water; the chemicals produced are readily hydrolyzed so that the processes are essentially dry. However, just because the products are readily hydrolyzed, water is universally used for air pollution abatement scrubbing of tail gases, for periodic cleaning of reaction vessels, and for the general washing of shipped containers; all resulting in acidic waste waters. In addition, water is used in protecting and transferring the raw material, elemental phosphorus, and phossy water is therefore a raw waste from this segment. Except for the manufacture of dry-process phosphoric acid (where in-process control has been demonstrated to achieve zero discharge of aqueous wastes), this segment has not yet achieved sufficient reduction of effluents. The application, however, of currently-available technology is shown by this study to permit total recycle of waste waters (and so zero discharge) for the manufacture of P_2O_5 and P_2S_5; and to achieve the neutralization and removal of most suspended solids prior

to discharge for the manufacture of PCl_3 and $POCl_3$. For these latter two processes, more expensive but still economically achievable technologies are available for treating the chlorides so as to achieve zero discharge.

The phosphates segment of the industry, i.e., the group of chemicals manufactured from phosphoric acid, is characterized by acids and by finely-divided solids in the raw aqueous wastes. Several plants have already achieved zero discharge by in- process controls and by end-of-process treatment; and this study shows how the entire segment may achieve zero discharge by applying currently available practicable technology.

The general conclusion reached is that the industry has already solved its most serious raw waste problem, that is, the abatement of water pollution from phosphorus-producing facilities; and that the very high-volume manufacturing processes (phosphorus, phosphoric acid, sodium tripolyphosphate, and feed-grade calcium phosphate) have already achieved zero discharge. The remainder of the industry, made up of much smaller-volume plants, has lagged behind in effluent reduction, but technology is available to make the entire industry notable.

SECTION II

RECOMMENDATIONS

The recommended effluent limitations guidelines based upon best practicable control technology currently available is no discharge of process waste water pollutants to navigable waters for the manufacture of the following chemicals:

Phosphorus Production Category
Phosphorus (and Ferrophosphorus)
Phosphorus Consuming Subcategory
Phosphoric Acid (Dry Process)
Phosphorus Pentoxide
Phosphorus Pentasulfide
Phosphate Production Subcategory
Sodium Tripolyphosphate
Calcium Phosphates (Food Grade)
Calcium Phosphates (Animal Feed Grade)

The recommended effluent limitations for this technology for phosphorous trichloride and phosphorous oxychloride of the phosphorus consuming subcategory are given in Table 1.

Table 1. Recommended Best Practicable Control Technology Currently Available for the Manufacture of Phosphorus Trichloride and Phosphorus Oxychloride. (Process Water)

The recommended effluent limitations guidelines based upon best practicable control technology currently available for process water for the manufacture of PCl_3 and $POCl_3$ are:

	maximum 30 day average	
	Phosphorus Trichloride	Phosphorus Oxychloride
Total Suspended Solids: kg/kkg	0.7	0.15
(lb/ton)	(1.4)	(0.3)
Total Dissolved Solids: kg/kkg	5	3.5
(lb/ton)	(10)	(7)
pH	6.0-9.0	6.0-9.0

The above guidelines apply to the maximum average of daily values for any period of 30 consecutive days. The maximum for for any one day for of total suspended solids and total dissolved solids are twice the consecutive 30 day average value. The pH limitation must be met at all times. It is recommended that noncontact cooling water allowed to be

discharged. Effluent limitations for this waste stream are expected to be covered in future studies. For the purposes of this report, process water is defined as any water that comes into direct contact with any raw material, intermediate, product, by-product or gas or liquid that has accumulated such constituents.

The recommended effluent limitations guidelines based upon best available technology economically achievable is no discharge of process waste water pollutants for the manufacture of the following chemicals:

Phosphorus Consuming Subcategory
- Phosphorus (and Ferrophosphorus)

Phosphorus Consuming Subcategory
- Phosphoric Acid (Dry Process)
- Phosphorus Pentoxide
- Phosphorus Pentasulfide
- Phosphorus Trichloride
- Phosphorus Oxychloride

Phosphate Subcategory
- Sodium Tripolyphosphate
- Calcium Phosphates (Food Grade)
- Calcium Phosphates (Animal Feed Grade)

The recommended new source performance standards are the same as the above recommended best available technology economically achievable.

SECTION III

INTRODUCTION

PURPOSE AND AUTHORITY

Section 301(b) of the Act requires the achievement by not later than July 1, 1977, of effluent limitations for point sources, other than publicly owned treatment works, which are based on the application of the best practicable control technology currently available as defined by the Administrator pursuant to Section 304(b) of the Act. Section 301(b) also requires the achievement by not later than July 1, 1983, of effluent limitations for point sources, other than publicly owned treatment works, which are based on the application of the best available technology economically achievable which will result in reasonable further progress toward the national goal of eliminating the discharge of all pollutants, as determined in accordance with regulations issued by the Administrator pursuant to Section 304(b) to the Act. Section 306 of the Act requires the achievement by new sources of a standard of performance providing for the control of the discharge of pollutants which reflects the greatest degree of effluent reduction which the Administrator determines to be achievable through the application of the best available demonstrated control technology, processes, operating methods, or other alternatives, including, where practicable, a standard permitting no discharge of pollutants.

Section 304(b) of the Act requires the Administrator to publish within one year of enactment of the Act, regulations providing guidelines for effluent limitations setting forth the degree of effluent reduction attainable through the application of the best control measures and practices achievable including treatment techniques, process and procedure innovations, operation methods and other alternatives. The regulations proposed herein set forth effluent limitation guidelines pursuant to Section 304(b) of the Act for the phosphate manufacturing point source category.

Section 306 of the Act requires the Administrator, within one year after a category of sources is included in a list published pursuant to Section 306(b)(1)(A) of the Act, to propose regulations establishing Federal standards of performances for new sources within such categories. The Administrator published in the Federal Register of January 16, 1973 (38 F.R. 1624), a list of 27 source categories. Publication of the list constituted announcements of the Administrator's intention of establishing, under Section 306, standards of performance applicable to new sources within the phosphate manufacturing source category, which was included within the list published January 16, 1973.

SUMMARY OF DEVELOPMENT METHODS

The Environmental Protection Agency has determined that a rigorous approach including plant surveying and verification testing is necessary for the promulgation of effluent standards from industrial sources. A systematic approach to the achievement of the required guidelines and standards includes the following:

(a) Categorization of the industry and determination of those industrial categories for which separate effluent limitations and standards need to be set;

(b) Characterization of the waste loads resulting from discharge within industrial categories and subcategories;

(c) Identification of the range of control and treatment technology within each industrial category and subcategory;

(d) Identification of those plants having the best practical technology currently available (notable plants); and

(e) Generation of supporting verification data for the best practical technology including actual sampling of plant effluents by field teams.

The culmination of these activities is the development of the guidelines and standards based on the best practicable current technology.

This report describes the results obtained from application of the above approach to the phosphate manufacturing industry, as defined for the purpose of this study as the following list of products:

Elemental Phosphorus and Ferrophosphorus
Dry-Process Phosphoric Acid
Phosphorus Pentoxide
Phosphorus Pentasulfide
Phosphorus Trichloride
Phosphorus Oxychloride
Sodium Tripolyphosphate
Calcium Phosphates (Non-Fertilizer)

The effluent limitation guidelines and standards of performance proposed herein were developed in the following manner. The point source category was first subcategorized for the purpose of determining whether separate limitations and standards are appropriate for different segments within a point source category. Such subcategorization was based upon raw material used, product produced, manufacturing process employed, and other factors. The raw waste characteristics for each subcategory were then identified. This included an analysis of (1) the source and volume of water used in the process employed and the sources of waste and waste waters in the plant; and (2) the constituents (including thermal) of all waste waters including toxic constituents which result in taste, odor, and color in water or aquatic organisms. The constituents of waste waters which should be subject to effluent limitation guidelines and standards of performance were identified.

The full range of control and treatment technologies existing within each subcategory was identified. This included an identification of each distinct control and treatment technology, including both in-plant and end-of-process technologies, which are existent or capable of being designed for each subcategory. It also included an identification in terms of the amount of constituents (including thermal). The chemical, physical, and biological characteristics of pollutants of the effluent level resulting from the application of each of the treatment and control technology and the required implementation time were also identified. In addition, the non-water quality environmental impact, such as the effects of the application of such technologies upon other pollution problems, including air, solid waste, noise and radiation, were also identified. The energy requirement of each of the control and treatment technologies was identified as well as the cost of the application of such technologies.

The information, as outlined above, was then evaluated to determine what levels of technology constituted the best practicable control technology currently available, "best available technology economically achievable" and the "best available demonstrated control technology, processes, operating methods, or other alternatives". In identifying such technologies, various factors were considered. These included the total cost of application of technology in relation to the effluent reduction benefits to be achieved from such application, the age of equipment and facilities involved, the process employed, the engineering aspects, process changes, non-water quality environmental impact (including energy requirements), and other factors.

The data for identification and analyses were derived from a number of sources. These sources included EPA research information, published literature, previous EPA technical guidance for inorganic chemicals, alkali and chlorine industries, qualified technical consultation, and on-site visits and interviews at notable manufacturing plants throughout the United States. All references used in developing the guidelines for effluent limitations and standards of performance for new sources reported herein are included in Section XIII of this document. Five companies in the phosphate manufacturing industry were contacted. A breakdown of the data base is listed below:

Chemical	Number of Plants in Data Base			
	Literature	Inspected	Sampled	Permit Application
P_4	1	3	2*	2
H_3PO_4		2	1*	2
P_2O_5		1	1	1
P_2S_5		2	2	2
PCl_3		2	2	2
$POCl_3$		2	2	2
$Na_5P_3O_{10}$		2	1*	1
Calcium Phosphates				
(Food Grade)		1	1	1
(Feed Grade)		1	1	1

*Includes verification of plants with no discharge.

In addition much information was obtained from plant personnel at the time of plant inspections, plant sampling, and company discussions.

GENERAL DESCRIPTION OF THE INDUSTRY

The industry covered by this document is the phosphate manufacturing source category. It is more descriptively termed the nonfertilizer phosphorus industry. The following chemicals covered by SIC 2819 were studied:

- phosphorus
- ferrophosphorus
- phosphoric acid (dry process)
- phosphorus pentoxide
- phosphorus pentasulfide
- phoshporus trichloride
- phosphorus oxychloride
- sodium tripolyphosphate
- calcium phosphates (food grade)
- calcium phosphates (animal feed grade)

Other phosphorus and phosphate chemicals are expected to be covered at a later time.

The flow of materials in the phosphate manufacturing industry is depicted in Figure 1. This industry is almost entirely based upon the production of elemental phosphorus from mined phosphate rock. The economics have dictated that the phosphorus production facilities be located at the sources of the raw material, which are in three areas in the United States: Tennessee, the Idaho-Montana area, and Florida. The key in-plant siting decision is the relative weights of phosphate rock, elemental phosphorus and phosphoric acid (about 10:1:4). Hence, the rock is processed close to the mine and the acid is produced close to

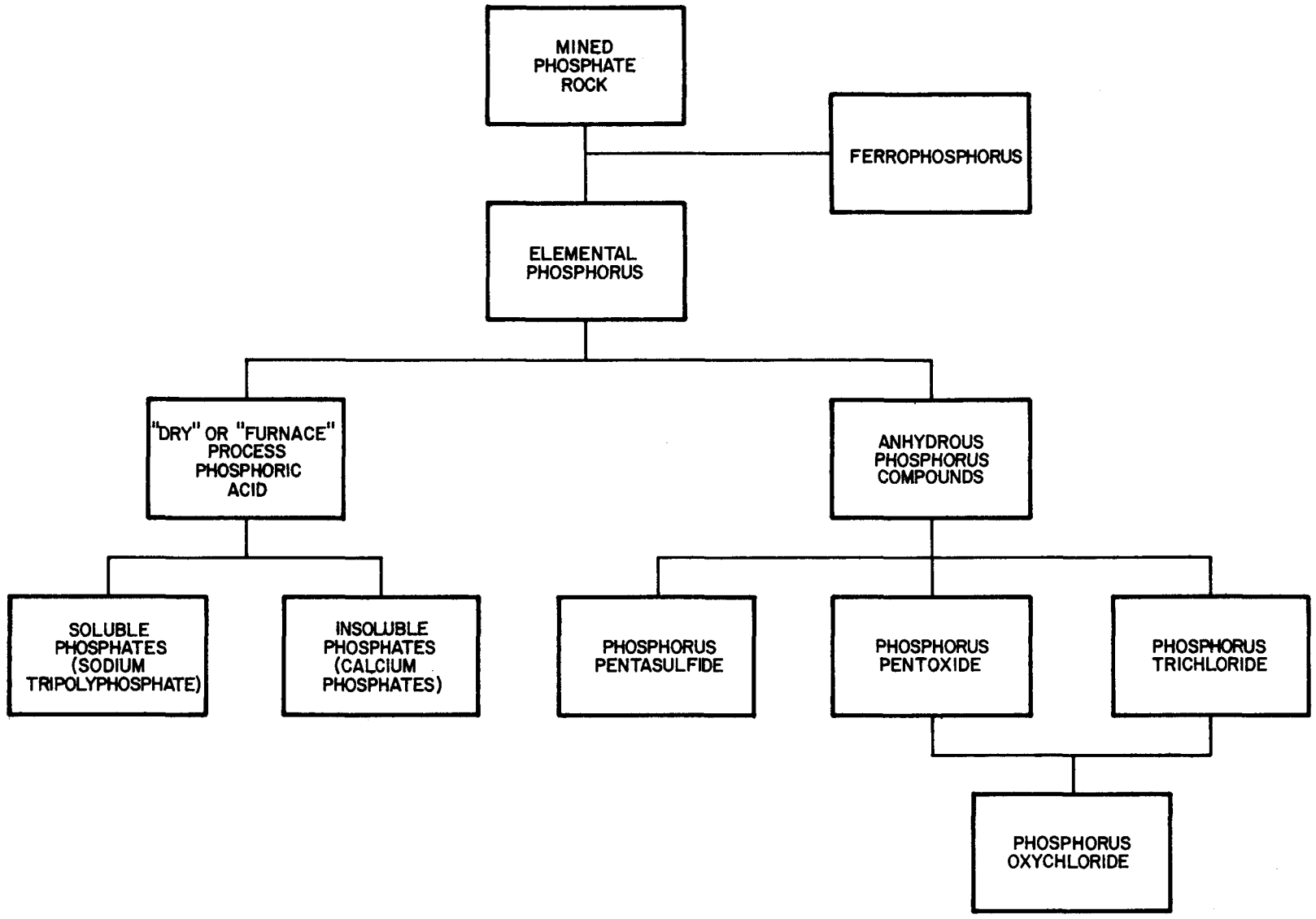

FIGURE I

FLOW OF MATERIALS IN THE NON-FERTILIZER PHOSPHORUS CHEMICALS INDUSTRY

its consumption point; the relatively low-weight elemental phosphorus is almost universally the form shipped from place to place.

Ferrophosphorus, widely used in the metallurgical industries, is a direct by-product of the phosphorus production process, since most furnace-grade phosphate rock contains 2 to 6 percent iron oxide.

Over 87 percent of the elemental phosphorus is used to manufacture high-grade phosphoric acid by the furnace or "dry" process (as opposed to the wet process which coverts phosphate rock directly into phosphoric acid; this lower-grade wet process acid is almost exclusively used in the fertilizer industry and is separately discussed in another portion of this EPA effort). The remainder of the elemental phosphorus is either marketed directly or converted to chemicals such as phosphorus pentoxide, phosphorus pentasulfide, phosphorus trichloride, and phosphorus oxychloride. These later chemicals are chiefly used in synthesis in the organic chemicals industry.

Much of the furnace-grade phosphoric acid is directly marketed, largely to the food industry and to the high-grade fertilizer industry. Phosphoric acid is also used to manufacture two basic classes of phosphates: water-soluble phosphates used in detergents and for water treatment, typified by sodium tripolyphosphate; and water-insoluble phosphates which are used in animal feeds and in foods, typified by the calcium phosphates.

The process involved in the non-fertilizer phosphorus chemicals industry are very briefly as follows:

Elemental phosphorus and ferrophosphorus are manufactured by the reduction of phosphate rock by coke in very large electric furnaces, using silica as a flux. Very large quantities of water are circulated for cooling the very hot equipment, for cooling and granulating the slag, and for condensing the phosphorus vapor from the furnace. Since water is both non-reactive and immiscible with liquid phosphorus, water is used extensively in direct contact with phosphorus for heat transfer, for materials transfer, for protection from the atmosphere, and for purification. This study is concerned with manufacturing operations subsequent to receiving washed phosphate ores at the phosphorus production facility. Ore benefication is commonly but not exclusively conducted at a separate off-site location. The huge waste load from benefication, 7500 kg of gangue per kkg of phosphorus eventually produced, warrants a separate study as a segment of the mining industry.

Phosphoric acid manufactured by the "dry" or furnace process consists of the burning of liquid phosphorus in air, the subsequent quenching and hydrolysis of the P_2O_5 vapor, and the collection of the phosphoric acid mists. The operation uses cooling water and process water is consumed

in making the aqueous acid. Solid wastes may be generated should a plant perform subsequent purification of the acid.

The manufacture of the anhydrous phosphorus chemicals (P_2O_5, P_2S_5, and PCl_3) is essentially by the direct union of phosphorus with the corresponding element. Phosphorus oxychloride, PCl_3, is manufactured from PCl_3 and air or from PCl_3, P_2O_5, and chlorine. Water use is limited to cooling water, to water for transferring elemental phosphorus, to scrubber water, and to wash water for reaction vessels and shipping containers.

Sodium tripolyphosphate is manufactured by the neutralization of phosphoric acid with the appropriate proportions of caustic soda and soda ash in mix tanks. The resulting mixture of monoand di-sodium phosphates is dried and the crystals calcined to produce the tripolyphosphate.

The calcium phosphates are similarly made by the neutralization of phosphoric acid with lime. The amount and type of lime used and the amount of water in the process determines whether anhydrous monocalcium phosphate, monocalcium phosphate monohydrate, dicalcium phosphate dihydrate, or tricalcium phosphate, is the final product. Table 2 lists production tonnages for these chemicals as reported by the U.S. Bureau of Census. As seen from this table the industry is relatively small relative to numbers of plants.

Table 3 lists the current selling prices of the chemicals within this industry. Table 4 lists the producers of phosphate products.

TABLE 2. U.S. Production Phosphates

Chemicals	Metric Tons	Short Tons	Number of Plants
Phosphorus	495,000	545,000	10
Ferrophosphorus	110,000*	121,000*	
Phosphoric Acid (Furnace Process)	1,640,000**	1,810,000**	25
Phosphorus Pentoxide	(withheld)	(withheld)	(withheld)
Phosphorus Pentasulfide	54,000	59,000	5
Phosphorus Trichloride	50,000	55,000	4
Phosphorus Oxychloride	28,000	31,000	4
Sodium Tripolyphosphate	945,000	1,040,000	17
Calcium Phosphates	536,000	592,000	7

*Independently estimated.(2)

**Estimated as 87 percent of Phosphorus Consumption, using 90 percent conversion, and stated as acid of 54 percent P_2O_5. The total production of phosphoric acid, both wet and dry was 5,650,000 kkg (6,240,000 short tons).

TABLE 3. Current Selling Prices of Phosphorus Chemicals

Source: Chemical Marketing Reporter, June 25, 1973

CHEMICAL	GRADE	SELLING PRICE	
		$/Metric Ton	$/Short Ton
White Phosphorus		419	380
Phosphoric Acid (Furnace)	75% Commercial & Feed	164	149
	80% Commercial & Feed	176	160
	85% National Formulary	194	176
Phosphorus Pentoxide		441	400
Phosphorus Pentasulfide		299	271
Phosphorus Trichloride		292	265
Phosphorus Oxychloride		270	245
Sodium Tripolyphosphate	Technical	179	162
	Food	270	245
Monocalcium Phosphate	Anhydrous Food	314	285
Dicalcium Phosphate	U.S.P Food	286	259
	Feed	82	74
Tricalcium Phosphate	NF Precip.	315	286

TABLE 4

Producers of Phosphate Products

	Phosphorous	Phosphorous Pentoxide	Phosphorous Trichloride	Phosphorous Oxychloride	Phosphorous Pentasulfide	Furnace Acid	Sodium Tripolyphosphate	Feedstock Dicalcium Phosphate	Technical Calcium Phosphate
Holmes Company	0								
FMC Corporation	0		0	0		0	0		
Mobil Corporation	0		0			0	0		
Monsanto Company	0		0	0	0	0	0		0
Occidental Petroleum Corp.	0	0	0	0	0	0	0	0	
Stauffer Chemical	0	0	0	0	0	0	0		0
TVA	0					0			
Olin Corporation							0		
Goodpasture, Inc.						0			
American Cyanamid Co.								0	
Borden, Inc.								0	
Eastman Kodak Co.									0
Farmland Industries								0	
Int'l. Minerals & Chemical Corp.								0	
Knox Gelatine, Inc									0
Richardson-Merrell, Inc.									0

DETAILED PROCESS DESCRIPTIONS

Following is a description of each process in this industry. Process flow disgrams are included. In generating the following process descriptions, emphasis has been placed upon process features which generate aqueous wastes. The details of the waste stream character, however, have been left for discussion in Section V.

Much of the process data in this section was acquired by discussions with industry personnel and by observations of existing facilities. A large body of data also exists in the published literature, and was used extensively in the following discussion. Of particular usefulness were the publications of Beveridge and Hill,(4) of Barber,(5,6) Barber and Farr,(7) and LeMay and Metcalf(8) of The Tennessee Valley Authority, which supplied very specific operating details of TVA's facilities; of Ellwood,(9) and of Bryant, Holloway and Silber(10) of the Mobil Chemical Company. Standard reference books such as Faith, Keyes and Clark,(11) Kirk and Othmer,(12) and Shreve,(13) were also useful.

THE PHOSPHORUS PRODUCTION SEGMENT

Phosphorus is manufactured by the reduction of mined phosphate rock by coke in an electric furnace, with silica used as a flux. Slag, ferrophosphorus (from iron in the phosphate rock) and carbon monoxide are reaction by-products. The simplified overall reaction may be written:

$$2Ca_3(PO_4)_2 + 10\ C + 6SiO_2 \xrightarrow{1250\ -\ 1500^{o}C} P_4 + 10\ CO + 6CaSiO_3.$$

A typical material balance for the process is:

Raw Materials		Products	
Phosphate Rock	10.0 kkg	Phosphorus	1.0 kkg
Silica	1.5	Ferrophosphorus	0.3
Coke	1.5	Slag	8.9
		Carbon Monoxide	2.8
Total	13.0 kkg	Total	13.0 kkg

The electrical power consumption is approximately 15,400 KWH/kkg (14,000 KWH/ton) of phosphorus produced; part of this supplies the endothermic heat of reaction of 6,200 KWH/kkg of P_4.

The standard process, as pictured in Figure 2, consists of three basic parts: phosphate rock preparation, smelting in the electric furnace, and recovery of phosphorus.

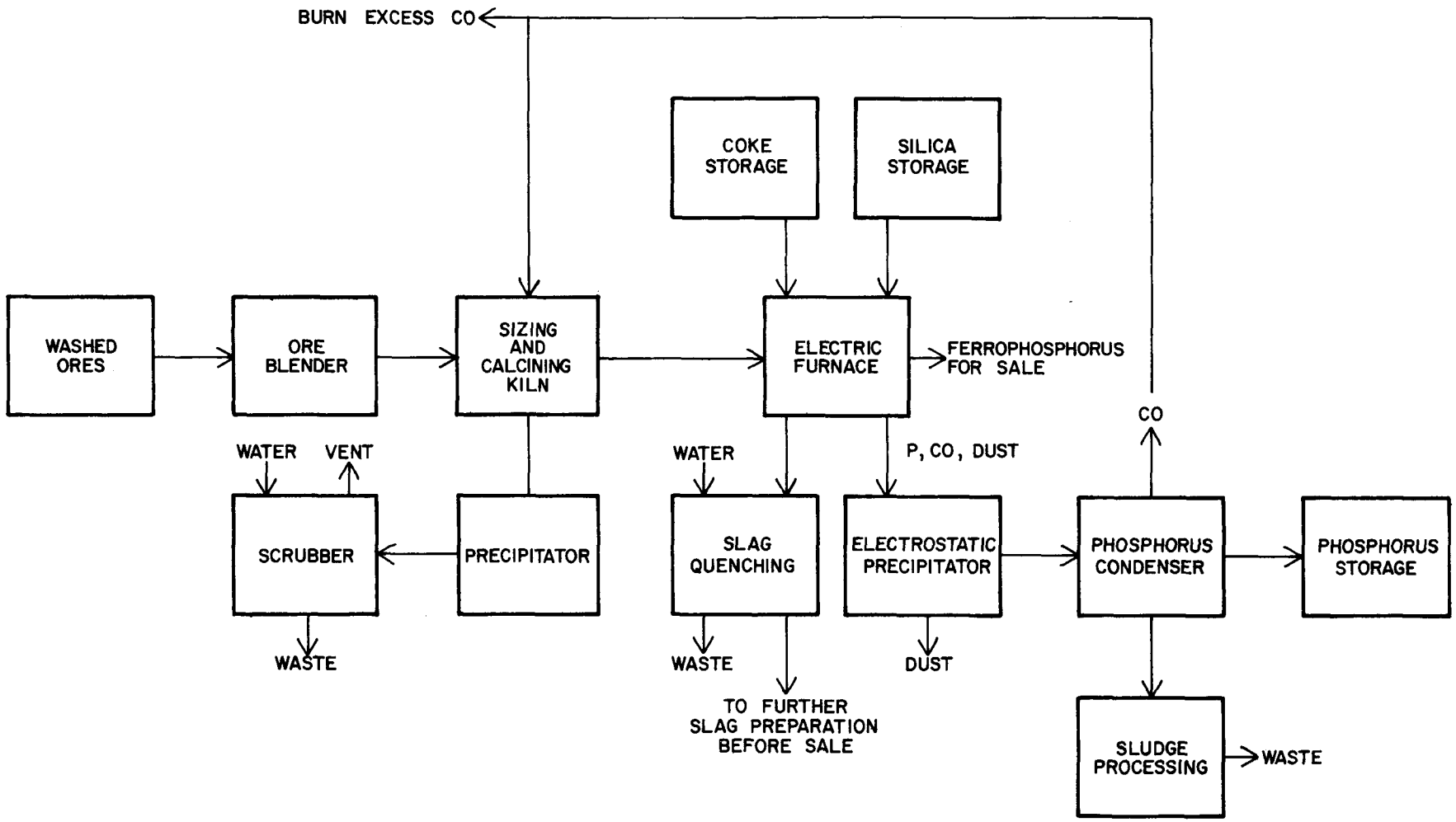

FIGURE 2
STANDARD PHOSPHORUS PROCESS FLOW DIAGRAM

Phosphate rock ores are first blended so that the furnace feed is of uniform composition. The silica composition is important since the overall furnace feed must have a SiO_2/CaO ratio close to the eutectic composition for desired slag flow properties. The blended phosphate rock is carefully pretreated by drying, by agglomerating the particles, and by heat treating.

After the raw phosphate rock is dried, sizing or agglomeration is accomplished by pelletizing, briquetting, flaking, or "nodulizing", and pre-formed agglomerates are then calcined in a rotary kiln. The nodulizing operation performs simultaneous agglomeration and calcining by heating the rock to its incipient fusion point, with subsequent crushing, sizing, and recycling of fines. Sizing promotes the even distribution of gas flow within the furnace and results in more efficient heat transfer and lower total energy costs. The size of the furnaces has dramatically increased in recent years, accentuating the needs for stoichiometric balance and thermal homogeneity within the charge (or "burden"). Heat treatment or calcining of the feed increases the strength and hardness of the particles, preventing large quantities of fines from being formed by attrition.

The calcining, at 1000 to 1400°C, also liberates water of hydration, organics, carbon dioxide, and fluorine at a much lower energy cost than would be required in the subsequent electric furnace operation. Since 25 percent of the manufacturing costs of phosphorus are for electric power, considerable effort is made to conserve this power. Moreover, by-product carbon monoxide from the smelting operation is available as a source of auxiliary energy.

The sizing and calcining operations are sources of dust and of fluorine fumes. The dust may be electrostatically precipitated, and the gases are scrubbed with water, removing fluorine as HF and H_2SiF_6. The dry dusts collected are normally recycled to the nodulizing operation.
The burden of treated phosphate rock, coke, and sand is charged to the furnace by incrementally adding weighed quantities of each of the three materials to a common belt conveyor. The furnace itself has a carbon crucible and carbon-lined steel sidewalls, with a two-foot-thick self-supporting cast concrete roof. In an effort to eliminate periodic roof replacement due to excessive cracking of the concrete, some newer furnaces have anti-magnetic (to avoid induction heating) stainless steel roof structures. Penetrations in the furnace are for feed chutes, for carbon electrodes, for tap holes, for slag (upper liquid layer) and for ferrophosphorus (lower liquid layer), and for exhaust gases.

Electric furnaces for phosphorus production have been dramatically increasing in size to achieve operating economies:

Year	Size of Largest Furnace in Operation Megawatts	kkg/Year	Tons/Year
1950	25	13,600	15,000
1960	50	27,200	30,000
1970	65	36,300	40,000

The smallest furnaces produce 9,100 kkg (10,000 tons) of phosphorus per year.

An appreciation of the physical size may be attained from the fact that the largest carbon electrodes used are 1.5 to 1.8 meters (5 to 6 feet) in diameter and carry 50,000 amps each.

The furnace is extensively water-cooled. Cooling water is used for the electrical transformer, for the furnace shell, for the crucible bottom, for the fume hood, for the tapholes, and for electrode joints. Newer furnaces use telescoping water seals on furnace electrodes; and for TVA-type furnaces with rotating crucibles, a water seal is provided between the crucible and the stationary roof.

The 2 to 6 percent Fe_2O_3 in the furnace-grade phosphate rock is reduced, with the iron recovered as the ferrophosphorus alloy:

$$Fe_2O_3 + 3C \rightarrow 2Fe + 3CO$$
$$8Fe + P_4 \rightarrow 4Fe_2P$$

The ferrophosphorus typically contains 59 percent iron and 22 percent phosphorus and is marketed for the production of phosphorus alloys. The vanadium content of ferrophosphorus adds to its value. Should the marketplace be favorable for ferrophosphorus, iron slugs can be added to the furnace charge. Alternately, should a soft market for ferrophosphorus occur, the ferrophosphorus can be converted into high-grade metallurgical iron and fertilizer phosphates. An important degree of freedom is in the ore blending operation, where ores of appropriate iron content may be selected depending upon the ferrophosphorus market.

Slag and ferrophosphorus are tapped periodically. The air cooled ferrophosphorus is sold in lumps to the metallurgical industry; no water is involved either in ferrophosphorus cooling or in subsequent product preparation.

The slag may typically contain 38 percent SiO_2 and 48 percent CaO, and also contain considerable quantities (depending of course upon the ore composition) of Al_2O_3, CaF_2, K_2O, and MgO, with traces of uranium and other heavy metals. The slag may be air-cooled, but water quenching is more typical. High-density slag is produced by adding water to molten slag in a pit, and by subsequently breaking it up and shipping aggregate for railroad bed or roadbed construction. Alternately, a high-velocity

water stream may be used upon the molten slag to produce a low density expanded or granulated slag, which has a market in concrete formulation. In either event, some of the fluorides from the slag are captured by the quenching water, either as soluble fluorides or as suspended solids.

There are numerous sources of fumes from the furnace operation. The feeding operation is a source of dust, and fumes are emitted from the electrode penetrations and from the tapping operations. These fumes, consisting of dust, phosphorus vapor (which is immediately oxidized to phosphorus pentoxide), and carbon monoxide are often collected and scrubbed.

The hot furnace gases, consisting of 90 percent CO and 10 percent P_4, pass through an electrostatic precipitator to remove the dust prior to phosphorus condensation. Unless this dust were removed, it would later be emulsified by liquid phosphorus and water, forming large amounts of "phosphorus mud" or sludge which would be difficult and costly to handle.

The precipitator is a most unusual piece of equipment. In the phosphorus process, the precipitator is in the main process stream, as opposed to its usual application in an exhaust stream. Because of this, it is gas-tight (especially since any air would cause phosphorus combustion). It operates at very high temperatures with the inlet gas approaching 540°C (1000°F), and its surfaces must be maintained hot to prevent phosphorus condensation (the dew point of phosphorus is 180°C (356°F)). The precipitator is typically a tube bundle, with the gas passing through the tubes, and with a high-voltage wire along the axis of each tube. Both the wire and the tube are mechanically shaken to release the dust into a hopper. In some installations, the dust is slurried in water, pumped to a settling pond, and the solids are recycled to the raw feed for recovery of phosphates values (the clarified pond effluent is reused in the slurrying operation).

The high-voltage wires may be insulated from the shell with an oil seal; contaminated oil is periodically replaced with fresh oil. Alternately, a quartz seal may be used. The entire unit is heated either electrically or by an inert gas jacket of by- product carbon monoxide combustion gases.

Downstream of the precipitator, the phosphorus is condensed by direct impingement of a hot water spray, which is sometimes augmented by heat-transfer through water-cooled condenser walls. The liquid phosphorus (freezing point 44°C (111°F)) drains into a water sump, where the water maintains a seal from the atmosphere. This water is partially neutralized by addition of ammonia or caustic to minimize corrosion, and then is recirculated from the sump to the phosphorus condenser.

Liquid phosphorus is stored in steam-heated tanks under a water blanket and is transferred into tank cars by pumping or by hot water displacement. The tank cars also have a protective blanket of water and are equipped with steam coils for remelting at the destination.

Despite very high precipitator removal efficiencies, enough dust reaches the condensers to form some phosphorus mud, which is typically 10 percent dust, 30 percent water, and 60 percent phosphorus.

The condenser exhaust gases are mainly carbon monoxide, which is either burned in a flare or utilized for heating elsewhere in the plant.

THE PHOSPHORUS-CONSUMING SEGMENT

Phosphoric Acid (Dry Process)

Phosphoric acid is made from elemental phosphorus in the "dry" process, as opposed to the acidulation of phosphate rock in the "wet" process. The wet process is discussed in a separate report, dealing with the fertilizer industry, in this overall EPA effort. Furnace acid, as dry-process phosphoric acid is called, is relatively pure compared to wet-process acid, as Table 5 indicates. Consequently, the furnace acid is primarily used for preparing foodstuffs, detergents, and other high-grade products; while wet acid is primarily used for preparing fertilizers and animal feed supplements.

TABLE 5. Impurities in Phosphoric Acid (54% P_2O_5)

	Wet Process Acid	Furnace Acid
F, wt %	0.6 - 1.0	0.007
SO_3, wt %	2.7	0.003
Al_2O_3, wt %	0.9	0.001
Fe_2O_3, wt %	1.2	0.0007
Water insolubles, wt %	0.8	
Total Impurities, wt %	6.2 - 6.6	0.012
Density, kg/l (lb/gal) @ 27°C (80°F)	1.72 (14.3)	1.57 (13.1)
Viscosity, cp @ 27°C (80°F)	85	18
Color	Black	Colorless

In the standard dry process illustrated in Figure 3, liquid phosphorus is burned in air, the resulting gaseous phosphorus pentoxide is absorbed and hydrated in a spray of water, and the mist is collected with an electrostatic precipitator.

The standard reaction may be written:

$$P_4 + 5O_2 \rightarrow 2P_2O_5 + 6H_2O \rightarrow 4H_3PO_4$$

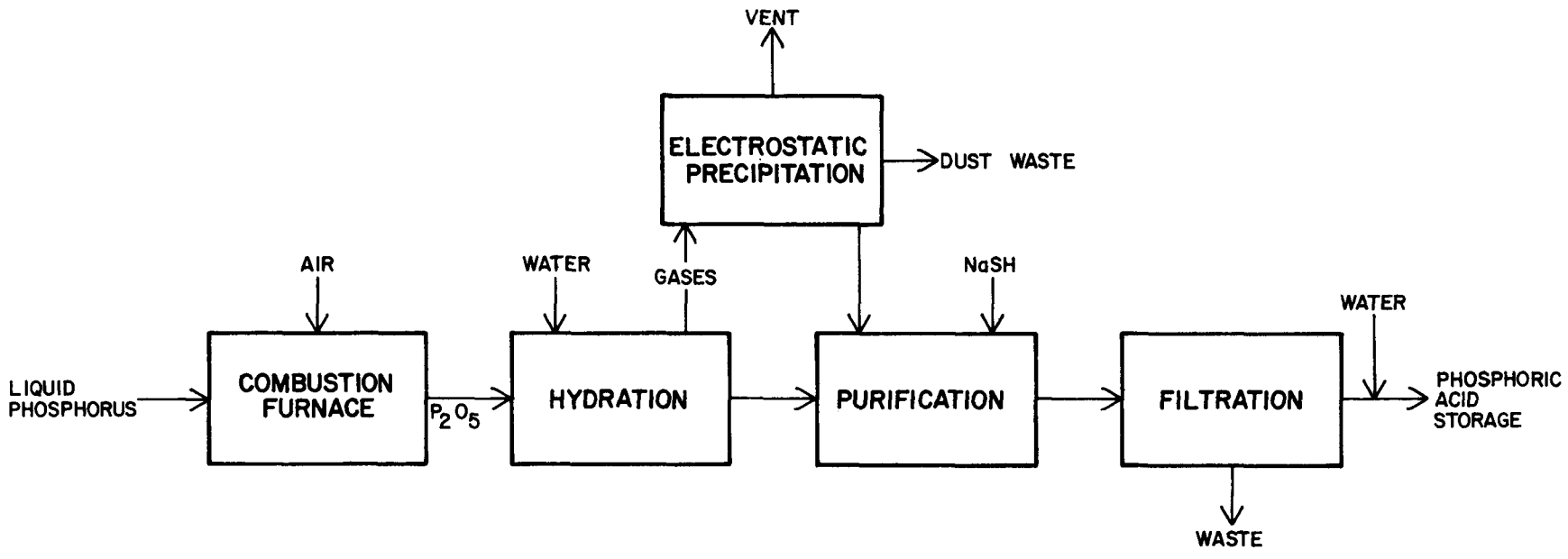

FIGURE 3
STANDARD PHOSPHORIC ACID FLOW DIAGRAM (DRY PROCESS)

Liquid phosphorus is stored under water in tanks heated with steam coils (the freezing point of phosphorus is 44°C (111°F)). The phosphorus may be fed to the burner by hot-water displacement in a feed tank, in a loop with a steam-heated displacement water tank and water pump. Alternately, the liquid phosphorus may be pumped directly.

There are variations in the design of the liquid phosphorus injector. Some producers achieve fine atomization using air in a dual-fluid injector (where the injection orifice can be large enough to prevent plugging). To prevent freezing of the phosphorus in upstream portions of the injector and yet to keep the injector tip cool, intricate use of both steam and cooling water has been simultaneously applied. Other designs have proven successful for phosphorus atomization, including the exploitation of extreme turbulence in a pre-combustion zone. Some form of temperature control is required, since red phosphorus formed at combustion temperatures much higher than 1650°C (3000°F) would color the resulting acid and would plug injector orifices.

In the combustion chamber, corrosion by P_2O_5 vapors and by hot phosphoric acid (formed from the moisture in the air) is countered by using a graphite lining. The steel shell of the combustion chamber is cooled by running water down its exterior surfaces. This mode of heat transfer is standard, pressurized cooling water is avoided since any leaks would result in premature hydration. Recent plants have been constructed with stainless steel combustion chambers.

The gas exiting from the combustion chamber is typically 540°C (1000°F), and is then hydrated with direct water sprays, which also reduces the temperature to 120°C (250°F) or less.

A variation of the standard process, illustrated in Figure 4, uses dilute acid for hydration instead of water. In this case, the make-up water is added in the vapor-liquid separation step. The rationale is that P_2O_5 vapor is absorbed more easily as the concentration of absorbing acid is increased. Another deviation from the standard process, also shown in Figure 4, is the use of a high-pressure-drop venturi scrubber to complete the somewhat difficult hydration, and a screen-type demister and separation tower instead of an electrostatic precipitator to free the tail gases of the persistent acid mist.

When an electrostatic precipitator is used for collection of the phosphoric acid mist, the corrosivity requires the use of carbon tubes and stainless steel high-voltage wires. Those plants using a high-pressure-drop venturi scrubber and a screen type demister with a separation tower utilize stainless steel construction. Where dilute phosphoric acid is used in the hydrator, the make-up water is added in the separation tower. Regardless of process variation, phosphoric acid

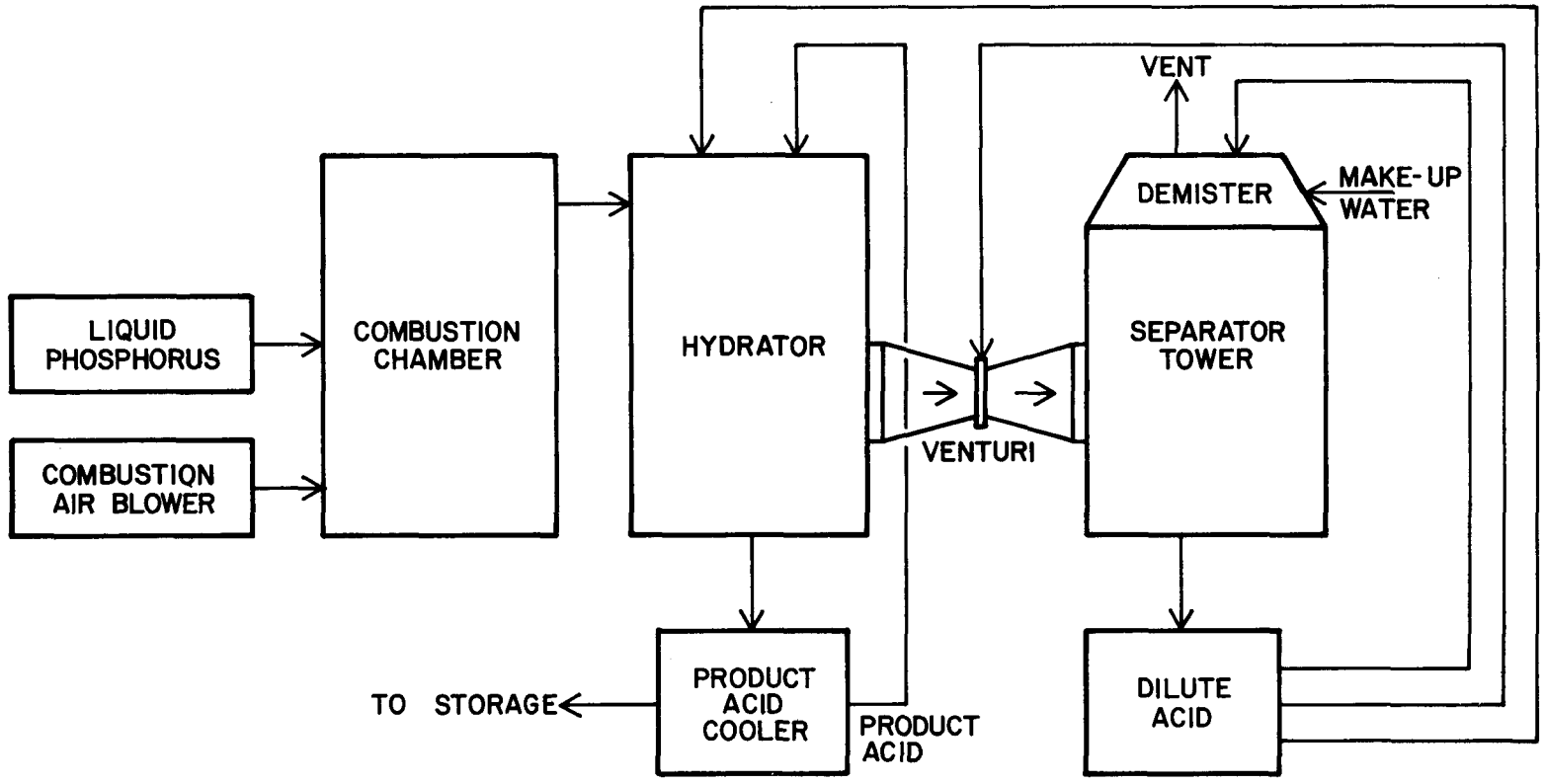

FIGURE 4
VARIATIONS OF PHOSPHORIC ACID (DRY) PROCESS

is made with a consumption of water; no aqueous waste streams are generated by the process.

The product acid is quite pure, but for the manufacture of foodgrade acid, traces of arsenic must be removed. Arsenic occurs naturally with phosphorus in the ore (they are both Group V-A elements) at a level of about 0.075 kg of arsenic per kkg of phosphorus (0.15 lb/ton). The arsenic is quantitatively carried through into the acid, and is commonly removed by treatment with a soluble sulfide followed by filtration of the insoluble arsenic sulfide.

Phosphorus Pentoxide

The manufacture of solid anhydrous phosphorus pentoxide is similar to the first stages of phosphoric acid manufacture. Liquid phosphorus is burned in an excess of air:

$$P_4(l) + 5O_2 \rightarrow 2P_2O_5(s)$$

Figure 5 is a flow diagram for a standard phosphorus pentoxide manufacturing facility. A significant difference between the two processes is that in the anhydrous phosphorus pentoxide process, the air is dried to an extremely low dew point, since any moisture results in a lumpy and agglomerated product not suited for its uses as a reactive drying agent and as a reactive condensing agent in organic synthesis. Typically, the ambient air is filtered, then refrigerated to achieve a dew point of -18 to -7°C (0 to 20°F), and then dried to a dew point of -46°C (-50°F) with silica gel.

After reaction of liquid phosphorus with excess dried air in the combustion chamber, the P_2O_5 vapor is condensed to a solid in a "barn", which is a room-like structure. Some installations utilize a more conventional tower for condensation. Both the combustion chamber and the barn (or tower) are cooled by an external flow of water down the surfaces; pressurized cooling water is avoided since any leaks would result in lumpy, unacceptable product.

Condensed phosphorus pentoxide solid is mechanically scraped from the walls using moving chains, and is discharged from the bottom of the barn or tower with a screw-type conveyor. The gases are vented to the atmosphere through a tail-gas water seal which absorbs any P_2O_5 vapor or solid carry-over. There is usually continuous water addition and overflow for the tail gas seal.

The product particle size is sensitive to the rate of cooling and condensation in the barn or tower. In a barn, the external surface-to-volume ratio is small, a relatively high temperature is maintained in the condensing unit, and rather large crystals may grow. In a tower, heat transfer is more rapid, and the product is very finely divided.

One installation uses two towers in series; the first has much higher heat transfer rates and results in a coarser product than the second, and the products from the two towers are separately packaged.

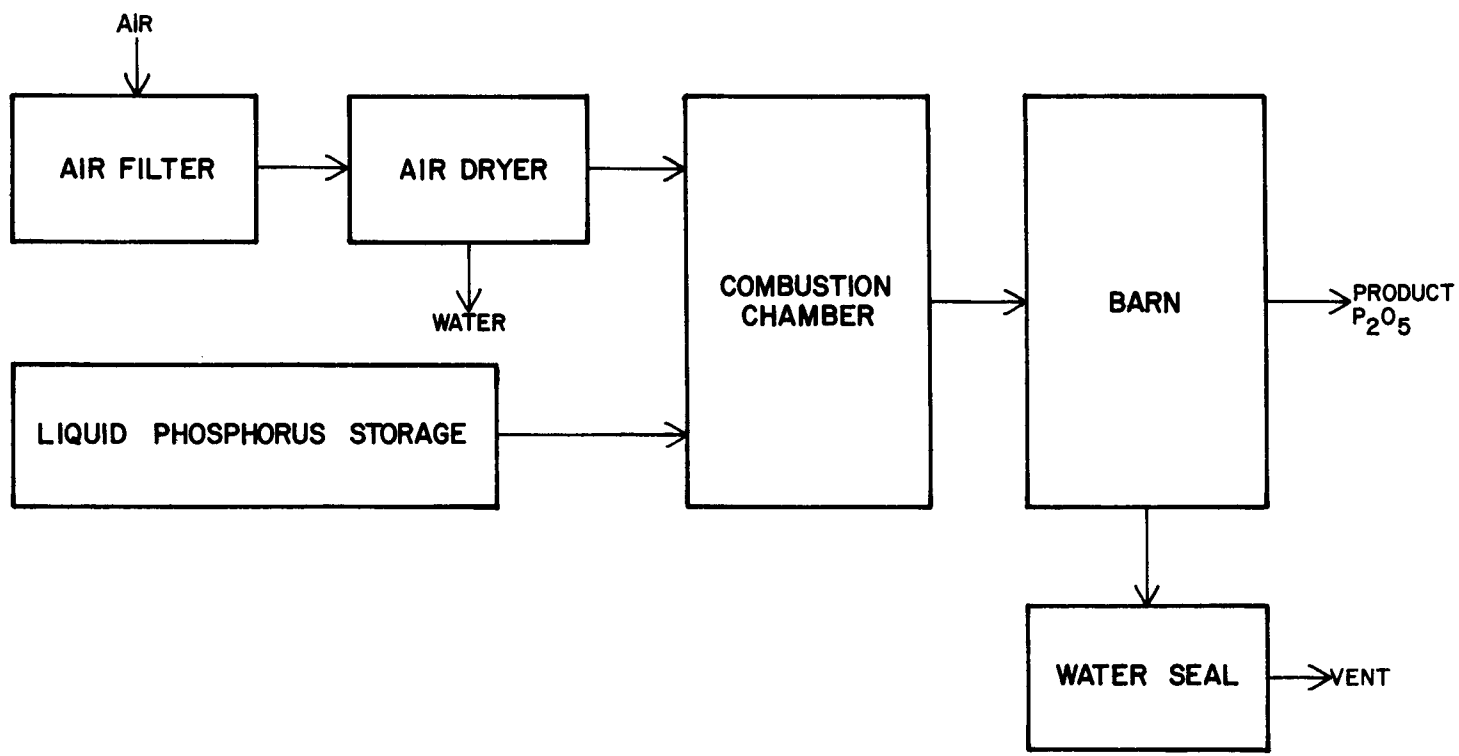

FIGURE 5
PHOSPHORUS PENTOXIDE MANUFACTURE FLOW DIAGRAM

Phosphorus Pentasulfide

The standard process for the manufacture of phosphorus pentasulfide, shown in Figure 6, is by direct union of the elements, both in liquid form:

$$P_4(l) + 10S(l) \rightarrow 2P_2S_5(l)$$

The largest use of phosphorus pentasulfide is for the manufacture of lubricating oil additives.

Liquid sulfur (melting point 113°C (230°F)) is transferred from a steam-heated storage tank using submerged pumps, and liquid phosphorus (melting point 44°C (111°F)) is transferred by hotwater displacement. The highly exothermic reaction is usually carried out as a batch operation in stirred cast-iron pots. A "heel" of molten P_2S_5 (melting point 282°C (540°F)) from the previous batch is used to absorb the initial heat of reaction. Liquid phosphorus and liquid sulfur are incrementally added. Since the reactants and the product are extremely flammable at the reaction temperature, the reactor is continuously purged with nitrogen. A water seal is used in the vent line.

The batches from multiple reactors are forced into an electrically-heated (300°C (570°F)) P_2S_5 holding tank by nitrogen pressure. Some of the P_2S_5 is converted directly into product, while the rest is purified. Liquid P_2S_5 from the holding tank that is to be sold is cast directly into drums or into cones. When the molten product contacts air during casting, it ignites and fumes of P_2O_5 and SO_2 are generated. A fume hood and water scrubber are used. The cones, after cooling, are crushed and packaged; solid P_2S_5 does not auto-ignite in air. The dust from the crushing operation is removed in a dry separation system such as a cyclone.

The liquid P_2S_5 that is to be purified may be vacuum distilled (normal boiling point is 515°C (960°F)) in a continuous system. The condenser is cooled by a high-temperature heat transfer fluid, which in turn is cooled in a water-cooled heat exchanger. The condenser is operated between the melting and boiling points of the product. Molten purified P_2S_5 is then cast and crushed, sharing the fume scrubber and dust collection systems with the impure product operation.

An alternate mode of purification is the washing of crushed P_2S_5 with carbon disulfide, in which by-product phosphorus sesquisulfide (P_4S_3) and free sulfur are soluble.

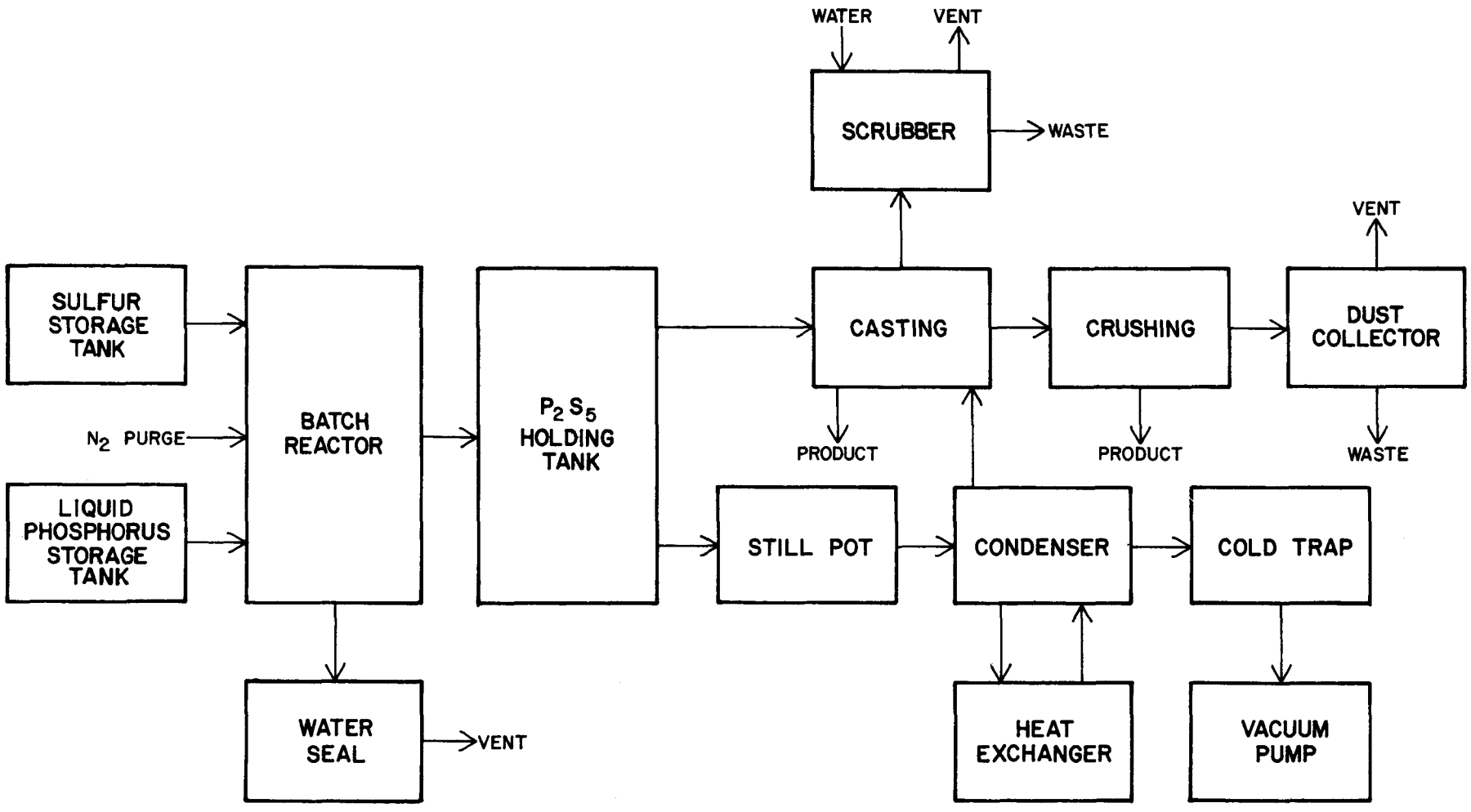

FIGURE 6
PHOSPHORUS PENTASULFIDE MANUFACTURE FLOW DIAGRAM

Phosphorus Trichloride

Phosphorus trichloride, used extensively in organic synthesis, is manufactured directly from the elements:

$$P_4(l) + 6Cl_2(g) \rightarrow 4PCl_3(l)$$

The standard process is shown in Figure 7. Liquid phosphorus is charged to a jacketed batch reactor. Chlorine is bubbled through the charge, and phosphorus trichloride product (melting point -112°C (-173°F)), boiling point 74°C (165°F) is refluxed until all of the phosphorus is consumed. Some cooling water is used in the reactor jacket since the formation of PCl_3 is exothermic. Care is taken to avoid an excess of chlorine; otherwise, phosphorus pentachloride is formed.

When the reaction is complete, the cooling water to the reflux condenser is turned off, steam is supplied to the reactor jacket, and the product of the batch distillation is condensed and collected.

A water scrubber collects hydrochloric acid and phosphorous acid, the hydrolysis products of PCl_3 vapors:

$$PCl_3 + 3H_2O \rightarrow 3HCl + H_3PO_3$$

The vapor pressure of the product is sufficiently high so that the fumes from transferring the product into shipping containers are also collected and scrubbed.

In a variation of the standard process, the reaction is conducted semi-continuously instead of batch-wise. The reflux condenser of Figure 7 is tailored so that only a small fraction of the PCl_3 is withdrawn as product; the larger fraction of condensed PCl_3 returns to the reactor and serves as the working fluid and heat sink for the reaction, since elemental phosphorus is somewhat soluble in PCl_3. Gaseous chlorine is added continuously, and liquid phosphorus is added incrementally.

No provision is generally made for continuous or frequent withdrawal of residue from the reactor either in the batch process or in the semi-continuous process. Instead, the residue is permitted to accumulate, and the reactor is shut down for cleanout at infrequent intervals.

Phosphorus trichloride is corrosive and is often shipped in returnable nickel drums. Prior to use, these drums are thoroughly washed with water and steam-cleaned. Some recent use has been made of non-returnable epoxy-lined steel drums.

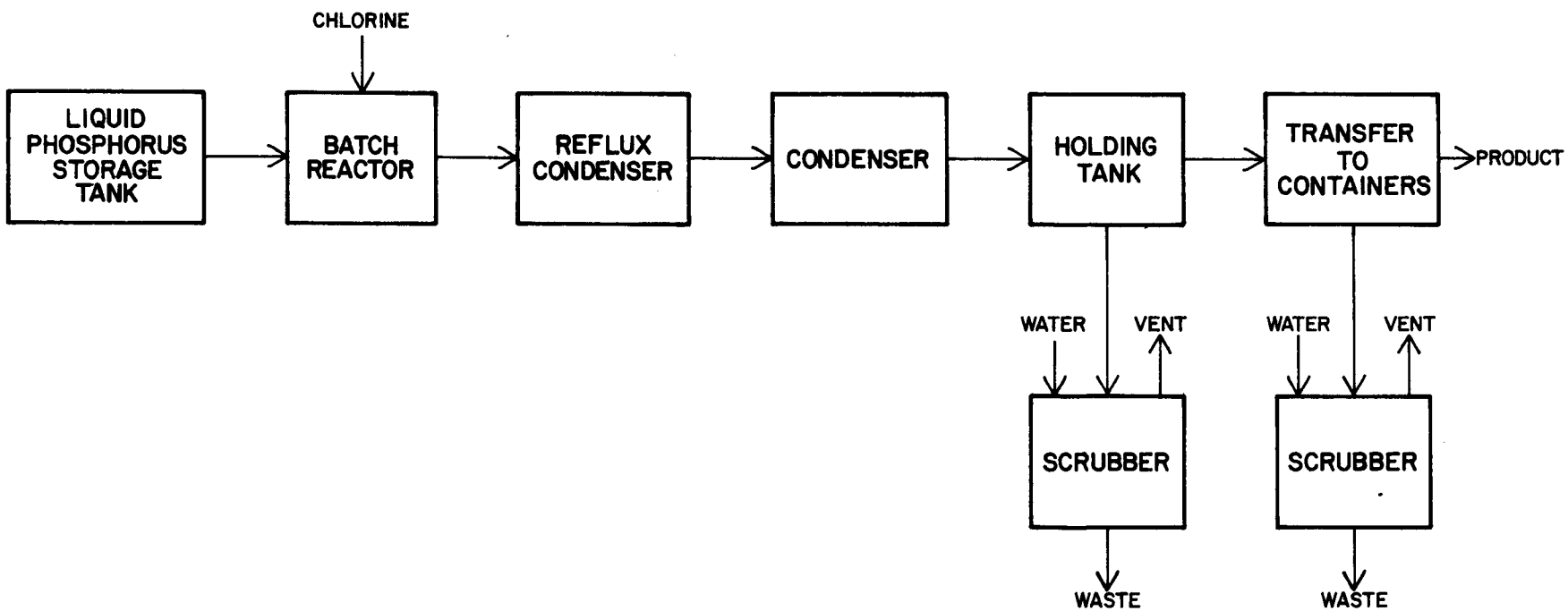

FIGURE 7
PHOSPHORUS TRICHLORIDE MANUFACTURE FLOW DIAGRAM

Phosphorus Oxychloride

Phosphorus oxychloride, used in the preparation of organic phosphate esters and pharmaceuticals, is manufactured by the reaction of liquid phosphorus trichloride, chlorine, and solid phosphorus pentoxide:

$$3\ PCl_3(l) + 3\ Cl_2(g) + P_2O_5(s) \rightarrow 5\ POCl_3\ (l)$$

The standard process, illustrated in Figure 8, is carried out in a batch reactor and still very similar to the standard phosphorus trichloride equipment. Liquid phosphorus trichloride is charged to the reactor, solid phosphorus pentoxide is added, and chlorine is bubbled through the mixture while the PCl_3 (boiling point 74°C (165°F)) and later the $POCl_3$ (boiling point 105°C (221°F)) are refluxed. When the reaction is complete, steam is supplied to the reactor jacket, the water to the reflux condenser is shut off, and the product is distilled over and collected.

An alternate process for the manufacture of phosphorus oxychloride from phosphorus trichloride is also in commercial use. As is shown in Figure 9, dried air is used as the oxidant in a batch process. A water-cooled reflux condenser is used as in the standard process, except that a refrigerated condenser is added in series to ensure total reflux of the PCl_3 upstream of a water scrubber for the tail gas. The significant difference is that in the air-oxidation process, a large quantity of non-condensible gas (nitrogen and excess oxygen) is involved.

Instead of a final distillation step, the product $POCl_3$ is filtered, with periodic changing of the cartridge filter elements.

Water scrubbers collect hydrochloric acid and phosphoric acid, the hydrolysis products of $POCl_3$ vapors, from both the reaction/distillation equipment and from transferring operations (for either process):

$$POCl_3 + 3H_2O \rightarrow 3HCl + H_3PO_4$$

Like phosphorus trichloride, phosphorus oxychloride is extremely corrosive and is shipped in returnable nickel drums. Prior to reuse, these drums are thoroughly washed with water and steam cleaned. Some recent use has been made of non-returnable epoxy lined steel drums.

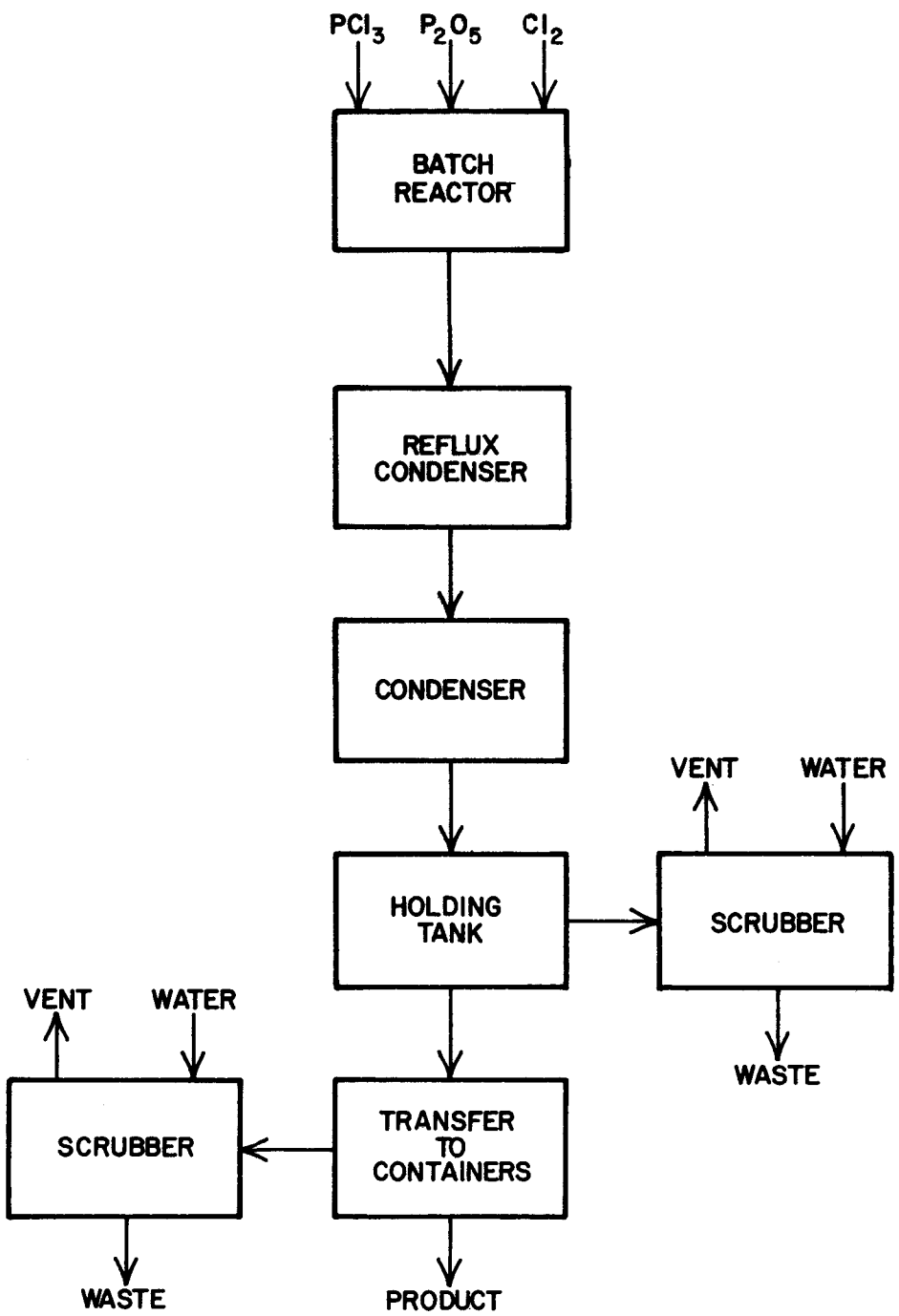

FIGURE 8
STANDARD PROCESS FOR
PHOSPHORUS OXYCHLORIDE MANUFACTURE

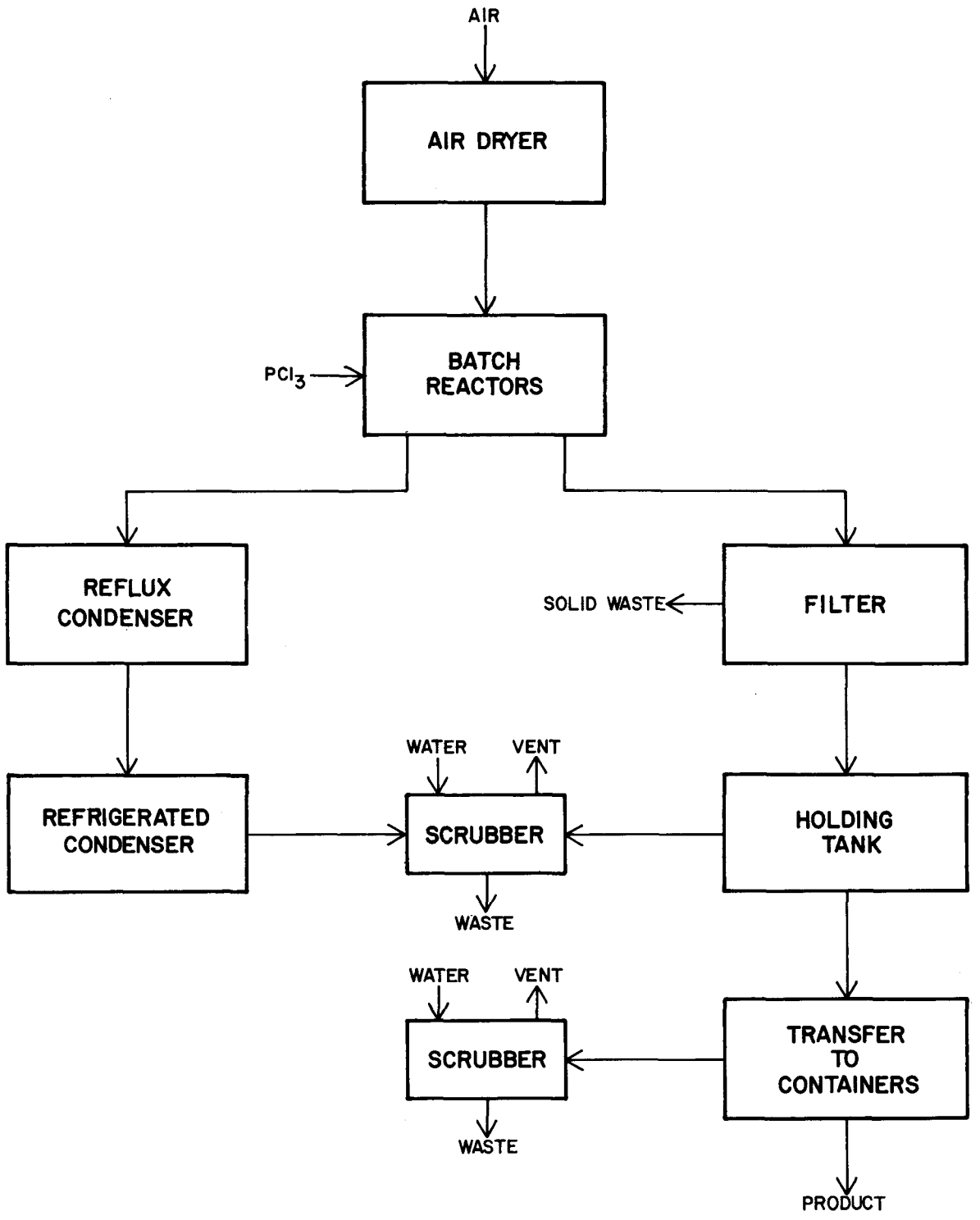

FIGURE 9
ALTERNATE PROCESS FOR
PHOSPHORUS OXYCHLORIDE MANUFACTURE

THE PHOSPHATE SEGMENT

Sodium Tripolyphosphate

Sodium tripolyphosphate is manufactured by the neutralization in mix tanks of phorphoric acid by soda ash or by caustic soda and soda ash, with the subsequent calcining of the dried mono and di-sodium phosphates crystals. Figure 10 is a flow diagram of the standard process. The sodium tripolyphosphate product is widely used in detergents and in water-softening applications. In the neutralization step, the amount of raw materials is measured and controlled to yield monosodium orthophosphate and disodium orthophosphate in a 1:2 mole ratio:

$$6H_3PO_4 + 5Na_2CO_3 \rightarrow 2NaH_2PO_4 + 4Na_2HPO_4 + 5H_2O + 5CO_2,$$

or

$$9H_3PO_4 + 5NaOH + 5Na_2CO_3 \rightarrow 3NaH_2PO_4 + 6Na_2HPO_4 + 10H_2O + 5CO_2$$

In either process variation, the final pH in the mix tank is very carefully adjusted by small additions of either phosphoric acid or caustic soda solution.

The mixture of sodium orthophosphates is spray-dried or drum dried and the solids calcined to produce the sodium tripolyphosphate:

$$NaH_2PO_4 + 2\ Na_2HPO_4 \rightarrow Na_5P_3O_{10} + 2\ H_2O$$

The product is then slowly cooled or tempered to preserve the condensed form of the phosphates. If the product is chilled too rapidly, it will revert to a mixture of the meta- and polyphosphates:

$$Na_5P_3O_{10} \rightarrow Na_3PO_3 + Na_2P_2O_7$$

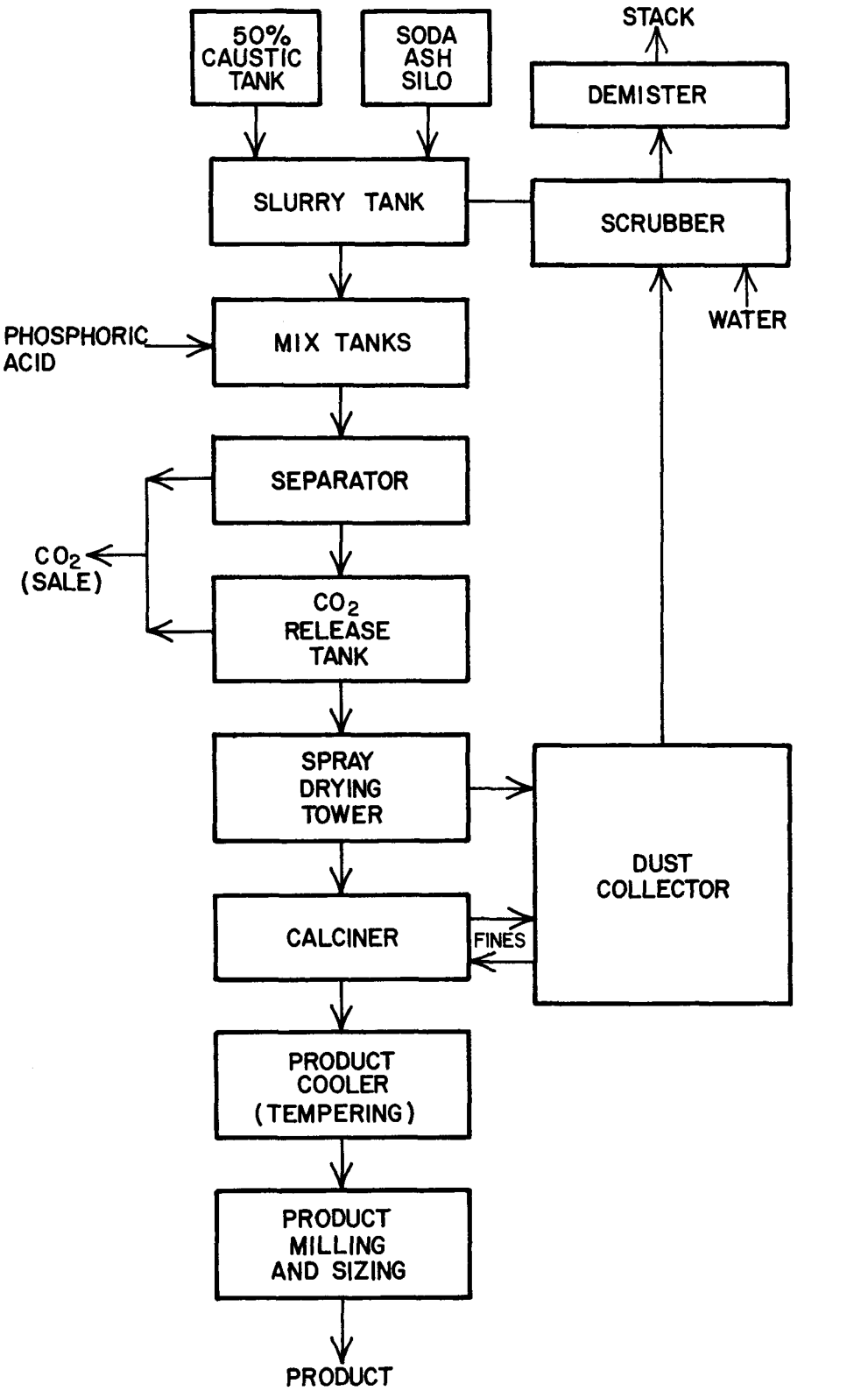

FIGURE 10
STANDARD PROCESS FOR
SODIUM TRIPOLYPHOSPHATE MANUFACTURE

Calcium Phosphatès

The non-fertilizer calcium phosphates are made by the neutralization of phosphoric acid with lime. Although the reactions are chemically similar, the processes for manufacturing the different calcium phosphates differ substantially from one another in the amount and type of lime used and the amount of process water used (See Figures 11 and 12).

Relatively pure, food-grade monocalcium phosphate (MCP) is made in a stirred batch reactor from furnace acid and lime slurry:

$$2H_3PO_4 + Ca(OH)_2 \rightarrow Ca(H_2PO_4)_2 \cdot H_2O + H_2O$$

An excess of phosphoric acid maintained during the batch addition cycle inhibits the formation of dicalcium phosphate. A minimum quantity of process water is used. The heat of reaction liberates some water as steam in the reactor, and the remaining water is evaporated in a vacuum dryer, a steam-heated drum dryer, or in a spray-dryer. The anhydrous MCP is produced by using CaO (quicklime) and in carrying out the reaction at 140°C (310°F) so that water is driven off as it is produced.

Relatively pure, food-grade tricalcium phosphate (TCP) is made in a similar manner to MCP, except that an excess of lime slurry maintained during the batch addition cycle inhibits formation of dicalcium phosphate:

$$2H_3PO_4 + 3Ca(OH)_2 \rightarrow Ca_3(PO_4)_2 + 6H_2O$$

Like MCP, the TCP is dried to prevent excessive product temperatures.

Relatively pure, food-grade dicalcium phosphate (DCP) is made in batch stirred reactors, but with much more process water than for either MCP or TCP:

$$H_3PO_4 + Ca(OH)_2 \rightarrow CaHPO_4 \cdot 2H_2O$$

The stoichiometry for DCP manufacture is critical; any excess H_3PO_4 during the batch addition cycle would result in some MCP and any excess $Ca(OH)_2$ would result in some TCP. The excess water in the DCP reactor is to ensure homogeneity so that the local stoichiometry is as balanced as the overall reactor stoichiometry.

As a result of the excess of water used, the reaction mixture is a pumpable slurry as opposed to the pasty consistency for MCP and TCP. This DCP is mechanically dewatered prior to drying.

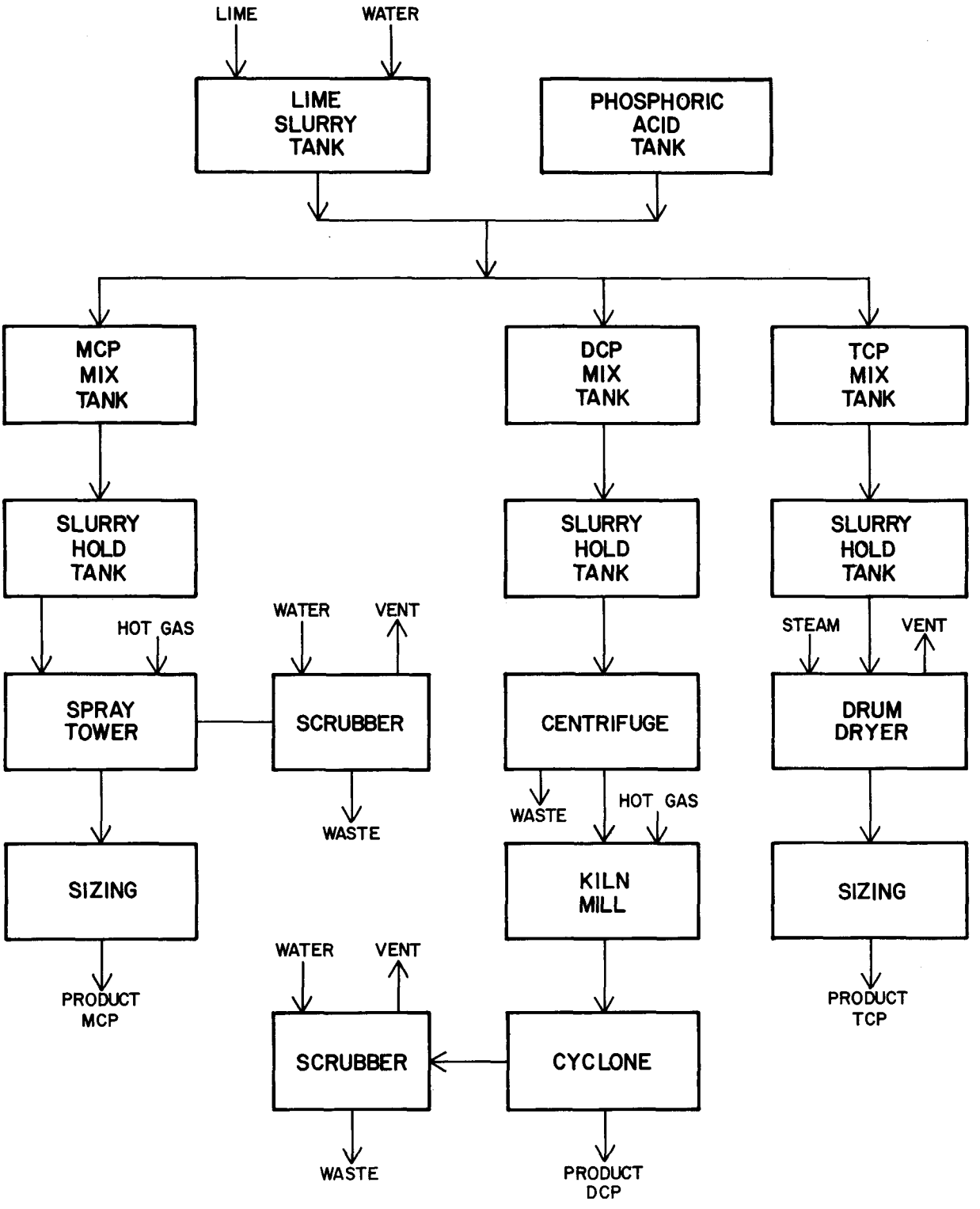

FIGURE 11
STANDARD PROCESS FOR
FOOD-GRADE CALCIUM PHOSPHATES

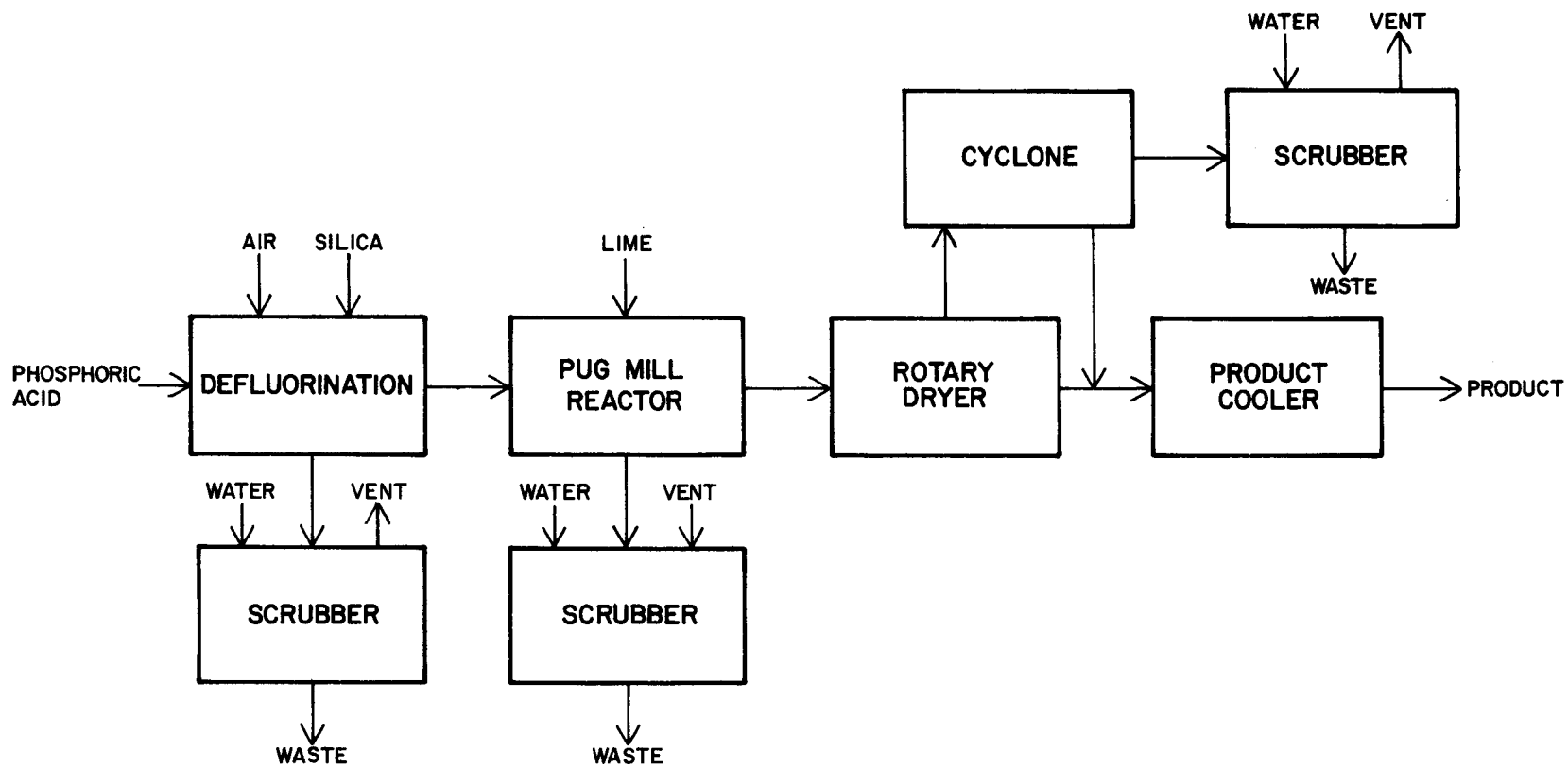

FIGURE 12
MANUFACTURE OF LIVESTOCK-FEED CALCIUM PHOSPHATE
FLOW DIAGRAM

Dicalcium phosphate (DCP) is also manufactured for livestock feed supplement use, with much lower specifications on product purity. Hence, the reaction can be conducted without excess water, since some MCP and/or TCP in the DCP product is perfectly tolerable. The pasty reaction product is normally dried in a rotary dryer. Powdered limestone, $CaCO_3$, may be used instead of lime. If quicklime is used, the drying step may be bypassed.

Another significant process difference is that non-food grade wet-process phosphoric acid is normally used for this product. The DCP plants defluorinate the acid unless this step was accomplished by the acid producer. Wet process phosphoric acid contains approximately one percent fluoride in various forms. The defluorination consists of treating the heated acid with finely-divided silica and steaming or aerating, which liberates silicon tetrafluoride gas:

$$SiO_2 + 4HF \rightarrow SiF_4 + 2H_2O$$

Wet scrubbers then hydrolyze and collect this gas as fluosilicic acid and silicic acid:

$$3\ SiF_4 + 3H_2O \rightarrow 2H_2SiF_6 + H_2SiO_3$$

The hot defluorinated phosphoric acid is then charged to the reactor to make dicalcium phosphate.

SECTION IV

INDUSTRY CATEGORIZATION

INTRODUCTION

In developing effluent limitations guidelines and standards of performance for new sources for a given industry, a judgment must be made by the Environmental Protection Agency as to whether effluent limitations and standards are appropriate for different segments (subcategories) within the industry. The factors considered in determining whether such subcategories are justified for the phosphate category of point sources are:

- wastes generated
- treatability of waste waters
- manufacturing process
- raw materials
- plant size and age
- product
- land availability
- air pollution control equipment

WASTES GENERATED

Tables 7, 8, and 9 in section V compile the raw waste loads for the phosphate category. Suspended solids and dissolved phosphates are common raw waste water constituents for phosphorus, food grade calcium phosphates, and feed grade calcium phosphates. Dissolved solids are present in concentrations significantly above background for all the chemicals studied. Elemental phosphorus can be a waste water constituent common to all of the phosphate manufacturing industry if the phossy transport water is not returned to the phosphorus producing plant. Sulfates, fluorides, and alkalinity are constituents specific to phosphorus production. Furthermore, the amount of waste water (425,000 l/kkg of P_4) resulting from the production of phosphorus is several orders of magnitude greater than that generated from any of the other processes. The chemicals H_3PO_4, P_2O_5, P_2S_5, PCl_3, and $POCl_3$ commonly generate acidic wastes and phosphates.

TREATABILITY OF WASTE WATERS

Phosphorus production clearly stands alone on the basis of waste water treatability. The large amounts of waste water produced (425,000 l/kkg P_4) present special problems. It is commonly practiced within the industry to return phossy transport water to the phosphorus plant. Therefore, the problem of treating elemental phosphorus is only a phosphorus plant problem, or can be so handled, that it will be a problem unique to phosphorus plants.

The chemicals H_3PO_4, P_2O_5, P_2S_5, PCl_3, and $POCl_3$ present similar treatability problems in that acidic wastes are encountered. PCl_3 and $POCl_3$ present more difficult problems because the resultant chloride ions are difficult to remove.

The calcium phosphates involve similar treatment problems (suspended solids and phosphates). Defluorination of animal feed grade calcium phosphates will produce fluoride wastes, but the proposed treatment schemes will handle this waste constituent.

MANUFACTURING PROCESS

Manufacturing process is the principal factor used to determine subcategories. Phosphorus production is an ore reduction process involving large electric furnaces and large amounts of raw material and slag. Ferrophosphorus is a byproduct in the phosphorus reaction and is always considered along with phosphorus when considering effluent quality.

The chemicals H_3PO_4, P_2O_5, PCl_3, and $POCl_3$ are all similar in that a gaseous phase intermediate or product is encountered somewhere in the reaction sequence. The synthesis of P_2S_5 resembles the above in that water and air must be completely absent in the whole or parts of the reaction sequence.

Sodium tripolyphosphate and the calcium phosphates are produced by the neutralization of phosphoric acid by alkaline slurries.

RAW MATERIALS

The following raw materials are used for each process:

Chemical	Raw Materials	
P_4 & Fe_2P	Phosphate Ore	Coke (C) SiO_2
H_3PO_4	P_4	O_2
P_2O_5	P_4	O_2
P_2S_5	P_4	S
PCl_3	P_4	Cl_2
$POCl_3$	PCl_3	Cl_2 (P_2O_5)
$Na_5P_3O_{10}$	H_3PO_4	Na_2CO_3 (NaOH)
Calcium Phosphates	H_3PO_4	$Ca(OH)_2$

When the nonphosphorus compounds are excluded, four subcategories become evident on the basis of raw material. The $POCl_3$ process is so like the PCl_3 process, however, that it is included in the latter subcategory.

PLANT SIZE AND AGE

Plant size will not affect the quantities of wastes produced (kg per kkg of product) to such a degree that subcategorization would be warranted. The same basic production processes for each chemical are used throughout the phosphate industry. Plant age will not affect the quantities of wastes produced to the degree where subcategorization is warranted. Another point is that there are no really new plants, and consequently the situation does not exist where new technologies make older technologies obsolete. With respect to economics it is particularly difficult to access the effects of waste water treatment. These chemicals serve as raw materials or intermediates for other products produced by the same company. The theoretical profitability of a single plant may well not decide if operations are to continue at that site. With this in mind it would be difficult if not impossible to establish criteria based upon the economics of plant size or age for the purpose of subcategorization.

PRODUCT

The product does have some bearing on the waste water quality when the product or vapors from the product or intermediate come into contact with water. This topic has already been indirectly discussed under wastes generated. In summary, phosphorus production is associated with elemental phosphorus, phosphates, fluoride, suspended and dissolved solids. H_3PO_4, P_2O_5, P_2S_5, PCl_3, and $POCl_3$ result in phosphates, dissolved solids, and acids in the waste waters. $Na_2P_3O_{10}$ and the calcium phosphates result in phosphates, suspended and dissolved solids.

LAND AVAILABILITY

Removal of suspended solids from raw waste waters is most easily accomplished by use of large settling ponds. This will be the principle concern for land availability. However, the plants in this category are located in rural sites when the problem of land availability is minimized.

AIR POLLUTION CONTROL EQUIPMENT

All of the chemicals covered in this study use wet scrubbers or water systems in the process itself which amount to scrubbers. Therefore this is not a topic for subcategorization. Furthermore dry air pollution control equipment is recommended to either precede or replace wet scrubbers in order to reduce scrubber water contamination. Volitilization of hazardous substances such as fluorine from neutralization and settling ponds is insignificantly small.

SUBCATEGORIES

The factors that entered into the selection of subcategories are: wastes generated, treatability of waste waters, product, and particularly raw material and manufacturing process. Three subcategories were considered necessary for purposes of establishing effluent guidelines:

a. Phosphorus Production
   1. phosphorus
   2. ferrophosphorus
b. Phosphorus Consuming
   1. phosphoric acid (dry process)
   2. phosphorus pentoxide
   3. phosphorus pentasulfide
   4. phosphorus trichloride
   5. phosphorus oxychloride
c. Phosphate
   1. sodium tripolyphosphate
   2. Calcium phosphates
      i. animal feed grade
      ii. food grade

SECTION V

WATER USE AND WASTE CHARACTERIZATION

INTRODUCTION

With the background of manufacturing technology discussed in Section III, this Section discusses the specific water uses in the phosphate manufacturing industry and the raw wastes from this industry prior to control and/or treatment of these wastes. Both Section III and Section V are intended to be generally descriptive of the industry; i.e., they outline the standard manufacturing processes and the standard raw waste loads that are common to the great bulk of plants in the industry. It is not until Section VII, Control and Treatment Technology, and Section IX, Best Practicable Control Technology Currently Available, that distinctions are made (and quantitatively supported by independently-verified sampling data of plant effluents) within the industry, pointing out those notable plants which have already achieved significant reduction or total elimination of polluting discharges.

The discussion to follow this Section, therefore, should not be taken as implying that the raw waste loads quoted are always actual plant discharges. Rather, they are intended to describe the total waste management problem originally faced by any plant in the industry. In actuality, significant abatement steps have been taken by some plants within the industry. By fully explaining the total waste management problem (in terms of raw waste loads), the control and treatment steps can be later explained and evaluated.

SPECIFIC WATER USES

Water is primarily used in the phosphate manufacturing industry for eight principal purposes:

- Non-contact Cooling Water
- Process and Product Water
- Transport Water
- Contact Cooling or Heating Water
- Atmospheric Seal Water
- Scrubber Water
- Auxiliary Process Water
- Miscellaneous Uses

Non-Contact Cooling Water

Water used without contacting the reactants, such as in a tube-in-shell heat exchanger, is not contaminated with process effluent. If, however, the water contacts the reactants, then contamination of the water results and the waste load increases. Probably the single most

important process waste control technique, particularly for subsequent treatment feasibility and economics, is segregation of non-contact cooling water from process water.

Non-contact cooling water is generally of two types in the industry. The first type is recycled cooling water which is cooled by cooling towers or spray ponds. The second type is once-through cooling water whose source is generally a river, lake or tidal estuary, and the water is returned to the same source from which it was taken.

The only waste effluent from the recycled water would be water treatment chemicals and the cooling tower blowdown which generally is discharged with the cooling water. The only waste effluent from the once-through cooling water would be water treatment chemicals which are generally discharged with the cooling water. The cooling tower blowdown may contain phosphates, nitrates, nitrites, sulfates and chromates. The water treatment chemicals may consist of alum, hydrated lime, and alkali metals such as sodium and potassium produced by ion exchange units. Regeneration of the ion exchange units is generally accomplished with sodium chloride or sulfuric acid, depending upon the type of unit employed in the plant.

Process and Product Water

The process or product water generally is that which comes in contact with the product and stays with the product as an integral part, such as the quenching, hydrolysis and dilution water used in phosphoric acid manufacture, or the water used as a reaction medium in food-grade dicalcium phosphate manufacture.

Transport Water

Water may be used for transporting reactants or products between unit operations. A pure example is in the use of water for transferring (by displacement) liquid phosphorus. Another example is the transfer of electrostatic precipitator dust in phosphorus manufacture as a slurry in water.

Since intimate contact between the process materials and transport water occurs, this water may generally contain dissolved or suspended materials and so is classified as process water.

Contact Cooling or Heating Water

This water comes under the general heading of process water because it comes in direct contact with process waters. A prime example is the large quantity of water used to quench the slag from phosphorus furnaces; another is the water used to condense the gaseous phosphorus after it is produced in the furnaces.

Other direct contact cooling or heating water usage such as that for contact steam heating and/or drying, steam distillation, pump and furnace seals, etc., is generally of much lower volume than the barometric condenser water and is easier to treat for waste effluents.

Atmospheric Seal Water

Because some of the materials in this industry spontaneously ignite upon contact with the oxygen in air, the air is kept out of reaction vessels using a water seal. Liquid phosphorus is universally protected by storing under a water blanket. These seal waters are considered as process waters.

Scrubber Water

Throughout this industry, water scrubbers are used to remove process vapors and/or dusts from tail gases or from gaseous process streams. The used scrubber water is regarded as process water since direct and intimate contact has occurred; the resultant solution or suspension may contain impurities or may be too dilute a solution to reuse or recover and thus is discharged.

Auxiliary Process Water

This water is used in medium quantities by the typical plant for auxiliary operations such as ion exchange regenerants, makeup water to boilers with a resultant boiler blowdown, equipment washing, storage and shipping tank washing, and spill and leak washdown. The volume of waste water from these operations is generally low in quantity but highly concentrated in effluents.

Miscellaneous Water Uses

These water uses vary widely among the plants with general usage for floor washing and cleanup, safety showers and eye wash stations, sanitary uses, and storm run-off. The resultant streams are either non-contaminated or slightly contaminated with wastes. The general practice is to discharge such streams without treatment except for sanitary waste.

PROCESS WASTE CHARACTERIZATION

The descriptions of the manufacturing processes in Section III, and the flow diagrams included in that Section, qualitatively discussed the sources of wastes. The following discussion is intended to quantify these waste streams both in quantity and in composition. These waste streams are the "raw" wastes prior to control or treatment (which is separately discussed in Section VII).

Aqueous wastes emanating from air pollution abatement equipment are considered as process wastes in this study.

The following sections quantify the raw process wastes in each segment of the industry. A discussion of the source, nature, and amount of these wastes for each segment is followed by a table summarizing the standard raw waste load.

Various plants in the industry differ significantly in the degree of process and cooling water recirculation. Hence, the waste water quantities and constituent concentrations quoted may be grossly different from plant-to-plant. However, the raw loads in kg per kkg of product (lb/ton) are dependent primarily upon the manufacturing processes and are therefore much more representative of the entire industry.

The Phosphorus Production Subcategory

The discussion of phosphorus manufacturing technology in Section III and the flow diagram of Figure 2, qualitatively pointed out the following streams emanating from the process (in addition, of course, to the phosphorus product stream):

By-products: Slag, Ferrophosphorus, and Carbon Monoxide
Non-contact Cooling Water
Electrostatic Precipitator Dust
Calciner Precipitator Dust
Calciner and Furnace Fume Scrubber Liquor
Phosphorus Condenser Liquor (Aqueous phase)
Phosphorus Sludge (or mud)
Slag Quench Liquor

The following sections discuss each of the above in quantitative detail, and identify which are typically returned to the process and which are classified as raw waste streams from the manufacturing operation.

By-product Streams

The by-products of the phosphorus manufacturing operation are:

	kg/kkg	lb/ton
Ferrophosphorus	300	600
Slag ($CaSiO_3$)	8,900	17,800
CO gas	2,800	5,600

Both ferrophosphorus and slag are sold, and the carbon monoxide is either used to generate heat in the process or is otherwise burned on site. Hence, none of the above three materials is considered a waste.

The quench water used for the by-product slag is separately discussed as a waste stream.

The by-product ferrophosphorus is cast as it is tapped from the furnace and air-cooled. The solids are then broken up and shipped. No water is used specifically for ferrophosphorus, and there are no wastes accountable for ferrophosphorus manufacture.

Non-Contact Cooling Water

Phosphorus production facilities generate huge quantities of heat. The electrical power consumption is approximately 15,500 kwh/kkg (48 million Btu/ton). An additional 8,100 kwh/kkg (25 million Btu/ton) are generated by combustion of the by-product carbon monoxide. Some of this energy, 6,100 kwh/kkg (19 million Btu/ton), is absorbed in the endothermic furnace reaction, and some is absorbed by the endothermic calcining operation. Other portions of this energy are released to the atmosphere by burning of waste carbon monoxide (that not used for calcining) and by convection, radiation and evaporative losses from the equipment and process materials. Still other portions are absorbed by contact waters in the calcining and furnace from scrubbers, in the phosphorus condenser, and in the slag quenching operation.

After accounting for the above energy demands, a significant quantity of heat is absorbed by non-contact cooling water for the furnace shell, the crucible bottom, the fume hood, the tap holes, the electrode fixtures, the electrical transformer, and for any indirect phosphorus condensation. The quantity of this water is highly variable from plant-to-plant, and depends upon the furnace design, the furnace size and the degree of recirculation (through heat exchangers with other water streams or through cooling towers), whether or not cooling water is used in series for different requirements, the inlet temperature of the available cooling water, and the ambient air temperature. Plant 181 uses 325,000 liters/ kkg of product (78,000 gal/ton); Plant 159 uses 38,000 liters/ kkg (9,000 gal/ton); and TVA at Muscle Shoals, Alabama,(5) uses 130,000 l/kkg (31,000 gal/ton).

Electrostatic Precipitator Dust

The high-temperature electrostatic precipitator removes dusts from the furnace gases before these gases are condensed for recovery of phosphorus. These dusts may contain up to 50 percent P_2O_5, and therefore finds value either as a fertilizer for sale or for return to the process. In the latter case, it is transported to the ore blending head end of the plant. One TVA scheme slurries the dust for transport; the slurry is pumped to a settling pond, the settled solids are fed to the ore - blending unit, and the pond overflow is reused in the slurrying operation.

The quantity of precipitator dust is approximately 125 kg/kkg of product (250 lb/ton). Regardless of the method of sale or reuse, the precipitator dust is not a waste material to be disposed of from the plant.

Calciner Precipitator Dust

Dry dust collectors are used in the calcining operation, upstream of wet scrubbing systems. The dry fine dusts collected are recycled directly to the sizing and calcining operations. The collected and recycled fines may amount to as much as 30 percent of the net production from the nodulizing process.

There is no plant discharge of dry calciner precipitator dusts; therefore this is not a component of the plant's raw waste load.

Calciner and Furnace Fume Scrubber Liquor

Water scrubbers are used for air pollution abatement for the calciner exhaust stream (downstream of dry dust collection), for furnace fumes, for ore sizing dusts, for coke handling dusts, for raw material feeding operation dusts, and for furnace taphole (slag and ferrophosphorus) fumes. The scrubber liquor contains suspended solids (which are mainly SiO_2 and Fe_2O_3), some phosphates and sulfates as dissolved solids, and a large quantity of fluorides. To explain the presence of these fluorides in the scrubber liquor, Table 6 lists the quantities of materials in commercial phosphate rock. presented as pounds per ton of phosphorus ultimately produced after normalizing of 26 percent P_2O_5 content. From Table 6, the average quantity of F in ore is 275 kg/kkg of P_4 (550 lb/ton). Approximately 8 percent of this quantity of F, or 22 kg (44 lbs), is volatilized in the ore calcining operation, and is subsequently a constituent of the scrubber liquor.

TABLE 6

Composition of Commercial Phosphate Rocks (12)

Expressed as kg per kkg (lb/ton) of Phosphorus Produced

Constituent	Florida Land Pebble Furnace Grade		Tennessee Brown Rock Furnace Grade		Western Phosphoric Acid Low Grade	
	kg/kkg	lb/ton	kg/kkg	lb/ton	kg/kkg	lb/ton
P_2O_5	2,600	5,200	2,600	5,200	2,600	5,200
CaO	3,800	7,600	3,550	7,100	3,150	6,300
MgO	35	70	75	150	190	380
Al_2O_3	125	250	1,230	2,460	810	1,620
Fe_2O_3	155	310	760	1,520	550	1,100
SiO_2	725	1,450	3,150	6,300	3,750	7,500
SO_3	215	430	50	100	260	520
F	305	610	270	540	245	490
CO_2	330	660	150	300	550	1,100
Organic Carbon	40	80	35	70	685	1,370
Na_2O	10	20	35	70	205	410
K_2O	10	20	50	100	135	270

This scrubber liquor is highly acidic for three reasons: the sulfur (as SO_3) forms sulfuric acid: the P_2O_5 forms phosphoric acid; and the fluorine, which is released in the form of silicon tetrafluoride, forms fluosilicic acid and silicic acid upon hydrolysis.

The quantity of scrubber liquor wasted depends upon the degree of recirculation of this liquor from a sump back to the scrubbers. TVA at Muscle Shoals circulates approximately 21,000 l/kkg of product (5,000 lb/ton) with a portion bled off to control the composition. This scrubber liquor is of the following composition:

Constituent	Concentration, %
F	3.1
SiO_2	1.1
P_2O_5	0.2
Fe_2O_3	0.1
S	1.7

If the fluoride concentration of 3.1 percent is equated to a standard raw waste load (as previously discussed) of 22 kg/kkg (44 lb/ton), the quantities of other scrubber liquor components may be calculated:

Constituent	Raw Waste Load kg/kkg	lb/ton
F	22	44
SiO_2	8	16
P_2O_5	1.5	3
Fe_2O_3	0.5	1
S	12	24

The total $CaCO_3$ acidity of the scrubber liquor, calculated from the above constituent quantities, is 60 kg/kkg (120 lb/ton).

Other plants do not recirculate scrubber liquor; the volume wasted is much greater and the constituent concentrations are much smaller, but the raw waste loads (in kg/kkg of product) should be comparable. Plant 181 does not directly recirculate the liquor, and uses 300,000 l/kkg (71,000 gal/ton) for scrubbing.

Phosphorus Condenser Liquor

The furnace gases pass from the electrostatic dust precipitator to the phosphorus condenser, where a recirculating water spray condenses the product. The condenser liquor is maintained at approximately 60°C (140°F), high enough to prevent solidification of the phosphorus (freezing point 44°C (112°F)). This condenser liquor is "phossy water", essentially a colloidal dispersion of phosphorus in water, since the solubility at 20°C (68°F) is only 3.0 mg/l. Depending upon how intimate the water/phosphorus contact was, the phosphorus content of phossy water may be as high as several weight per cent.

The condenser liquor also contains constituents other than elemental phosphorus: fluoride, phosphate, and silica. Using the average F content of ore (from Table 6) of 275 kg/kkg, plus the estimate that 12 percent of the F in the ore volatilizes in the furance and is therefore equivalent to 33 kg/kkg (66 lb/ton), and by accounting for 6 kg of F per kkg (12 lbs/ ton) which is collected in the precipitator dust and in the phosphorus sludge ash; a raw waste load of F is derived of 27 kg/kkg (54 lb/ton) in the condenser liquor. This condenser liquor is not acidic despite the hydrolysis of P_2O_5 and SiF_4 to H_3PO_4, H_2SiF_6, and H_2SiO_3 because aqueous ammonia or caustic is added to prevent undue corrosion in the condenser.

There are other sources of phossy water within the plant. Storage tanks for phosphorus have a water blanket, which is discharged upon phosphorus transfer. Railroad cars are cleaned by washing with water. Phosphorus may be purified by washing with water. Together, all sources of phossy water wastes amount to abcut 5,400 l/kkg (1,300 gal/ton), and at a concentration of 1,700 mg/l, the quantity of phosphorus wastes amount to about 9 kg/kkg produced (18 lb/ton), as reported by TVA.

At TVA, the condenser liquor is recirculated at the rate of 33,000 l/kkg (8,000 gal/ton). Other plants may differ significantly in the quantity of phossy water circulated, but the raw wastes (in kg/kkg of product) should be fairly uniform. For example, Plant 181, which does not directly recirculate its condenser water, uses 84,000 l/kkg (20,000 gal/ton), with an additional 17,000 l/kkg (4,000 gal/ton) for phosphorus handling and storage.

To calculate the raw waste loads of phosphate and silica in the condenser liquor, the following TVA recirculated-liquor composition was used:

Constituent	Concentration, %
F	8.3
P_2O_5	5.0
SiO_2	4.2

Equating 8.3 per cent F with the previously-derived 27 kg/kkg of F, the raw waste loads of P_2O_5 and SiO_2 become (respectively) 16.5 kg/kkg (33 lb/ton) and 13.5 kg/kkg (27 lb/ton).

Phosphorus Sludge

In addition to phossy water, the phosphorus condenser sump also collects phosphorus sludge, which is a colloidal suspension typically 10 per cent dust, 30 per cent water and 60 per cent phosphorus. The quantity of sludge formed is directly dependent upon the quantity of dust that escapes electrostatic precipitation; hence the very large investment made for highly efficient precipitators.

Using 125 kg of dust (per kkg of product) collected by the electrostatic precipitator, and assuming a 98 per cent collection efficiency, the dust reaching the condenser amounts to 2.5 kg/kkg (5 lb/ton). If all of this dust became part of the sludge, the sludge quantity would be 25 kg/kkg (50 lb/ton) of product, and it would contain 15 kg/kkg (30 lb/ton) of elemental phosphorus.

This sludge is then universally processed for recovery of phosphorus, typically by centrifugation. A 96 percent recovery has been reported, with the product (subsequently returned to the process) averaging 92 to

96 percent phosphorus. The remaining 4 per cent of the phosphorus in the sludge is burned in a phosphoric acid unit, so that no wastes emanate from the plant.

Other methods for processing the sludge which also result in no plant effluent include heating in a slowly rotating drum in an inert atmosphere to drive off phosphorus vapor, which is then condensed with a water spray into a sump. The solid residue obtained is completely free of elemental phosphorus and can be safely landfilled or recycled to the feed preparation section of the plant.

Slag Quenching Liquor

Slags from phosphorus furnaces are mainly SiO_2 and CaO, and would also contain Al_2O_3, K_2O, Na_2O, and MgO in amounts consistent with the initial ore composition. In addition to these oxides, phosphate rock may contain 0.1-0.2 kg/kkg (0.2-0.4 lb/ton) of uranium in the ore, and the radiation levels of both the slag and the quench waters must be appropriately noted. Other constituents of the slag presenting problems for quench water pollution control are fluoride and phosphate. Approximately 80 per cent of the original F in the phosphate rock, 220 kg/kkg of P_4 (440 lb/ton), referring to Table 6, winds up in the slag. About 2.7 per cent of the original P_2O_5 in the phosphate rock, 70 kg/kkg (140 lbs/ ton), wind up in the slag.

At Plant 181, approximately 24,600 l/kkg (5,900 gal/ton) may be used for quenching the slag, with the slag quench liquor having the following composition and raw waste loads:

Constituent	Concentration, mg/l	Raw Waste Load	
		kg/kkg P4	lb/ton P4
Total Suspended Solids	800	20	40
Total Dissolved Solids	1,700	42	85
Phosphates (as P)	12	0.3	0.6
Sulfate (as S)	1,000	25	50
Fe	14	0.35	0.7
F	170	4.5	9
Total Alkalinity	230	5.5	11

TABLE 7

Summary of Raw Wastes from Phosphorus Manufacture

Note: Waste water Quantities and Constituent Concentrations are highly variable, depending upon degree of recirculation, but the raw waste loads should be representative.

	Calciner Scrubber Liquor	Phosphorus Condenser Plus Other Phossy Water	Slag Quenching Water	Composite Waste
Waste water Quantity,				
l/kkg	300,000	100,000	25,000	425,000
gal/ton	72,000	24,000	6,000	102,000
Raw Waste Load, kg/kkg				
TSS	8.5	13.5	20.5	42.5
P_4	-	9	-	9
PO_4	2	22	1	25
SO_4	36	-	75	111
F	22	27	4.5	53.5
Total Acidity	60	-	-	54.5
Total Alkalinity	-	-	5.5	-
Raw Waste Load, lb/ton				
TSS	17	27	41	85
P_4	-	18	-	18
PO_4	4	44	2	50
SO_4	72	-	150	222
F	44	54	9	107
Total Acidity	120	-	-	109
Total Alkalinity	-	-	11	-
Concentrations, mg/l				
TSS	28	135	820	100
P_4	-	90	-	21
PO_4	7	220	40	59
SO_4	120	-	3,000	260
F	73	270	180	126
Total Acidity	200	-	-	128
Total Alkalinity	-	-	220	-

The Phosphorus Consuming Subcategory

No direct process aqueous wastes are generated in this segment of the industry. The raw wastes arise from phosphorus storage and transfer, from wet scrubbing of tail gases, from vessel cleaning, and from leaks and spills.

Phossy Water Wastes

Because phosphorus is transported and stored under a water blanket, phossy water is a raw waste material at phosphorus using plants as well as at phosphorus producing plants. The standard procedure when liquid phosphorus is transferred from a rail car to the using plant's storage tank is to pump the displaced phossy water from the storage tank back into the emptying rail car as practiced at Plants 037 and 192. Instead of being wasted at the phosphorus-using plant, the phossy water is shipped back to the phosphorus-producing facility for treatment and/or reuse. Therefore, standard raw phossy water wastes at the phosphorus-using plants are due to surges or to anomalies in the storage tank water level control system rather than to the direct wasting of all displaced water.

A more insidious source of phossy water may arise at phosphorus consuming plants. Should reactor contents containing phosphorus ever be dumped into a sewer as a result of operator error, emergency conditions or inadvertent leaks or spills, the phosphorus would remain at the low points in the sewer line generally as a solid (melting point 44°C (111°F)) and would contact all water flowing in that sewer from that time on. Since phosphorus burns when exposed to air (autoignition temperature 93°C), there is general reluctance to clean it out; the common practice is to ensure a continuous water flow to prevent fire.

The typical phosphorus loss for phosphorus-consuming plants is 1 kg lost to phossy water per kkg consumed (2 lb/ton). Whenever phosphorus is tranferred by displacement, 580 liters of water are displaced per kkg of phosphorus (140 gal/ton). These values are equivalent to a phosphorus concentration of 1700 mg/l. For comparison, a typical phosphorus content in phossy water at a phosphorus-producing plant has also been reported at 1700 mg/l.

Phosphoric Acid Manufacture

The production of phosphoric acid by the "dry" process from elemental phosphorus consumes a total of about 380 liters of water per kkg of product (92 gal/ton) for both the hydration and the acid dilution steps. The cooling water requirements are typically 92,000 liters per kkg of product (22,000 gal/ton); but with recycle of cooling water, the makeup cooling water requirement is approximately 4,600 liters per kkg of product (1,100 gal/ton). There is no aqueous process waste from notable

phosphoric acid Plants 003, 006, 042, and 075. However, despite good housekeeping at an notable plant, leaks or spills of phosphoric acid may account to an average of 1 kg/kkg (2 lb/ton), with a range of 0 to 2.5 kg/kkg (0 to 5 lb/ton).

Where food-grade phosphoric acid is produced, a standard raw waste of 0.1 kg/kkg (0.2 lb/ton) of arsenic sulfide is precipitated by addition of a soluble sulfide (H_2S, Na_2S, NaHS), and filtered out of the acid. An additional 0.75 kg/kkg (1.5 lb/ton) of filter-aid material may accompany the sulfide as a solid waste.

Phosphorus Pentoxide Manufacture

The waste water from the tail seals on the condensing towers typically contain 0.25 kg/kkg (0.5 lb/ton) of H_3PO_4 (100 per cent basis). Approximately 500 l/kkg (120 gal/ton) of water may be used, resulting in a concentration of 470 mg/l for the effluent bleed.

The inlet air dryer silica gel is regenerated often, but is renewed very infrequently (perhaps every ten years). The wasted material is typically landfilled.

Approximately 29,000 l/kkg (7,000 gal/ton) of non-contact cooling water is used.

Phosphorus Pentasulfide Manufacture

The water seals on the batch reactor vent lines accumulate a mixture of phosphorus mud and lower phosphorus sulfides. These seals are cleaned once a week, and the residue amount to 0.15 kg/kkg (0.3 lb/ton). This residue is hazardous and flammable, and is typically buried.

Should any batch be aborted (a rare occurrence) because of agitator failure, cast-iron pot failure or other reason, the material is disposed of by incineration.

The dust collected by a cyclone from the P_2S_5 crushing operation amounts to 1 kg/kkg (2 lb/ton).

The still pot for the vacuum distillation step accumulates impurities, which include carbon and iron sulfur compounds and glassy phosphates. Most important, the residues contain arsenic pentasulfide, which is higher-boiling than the corresponding phosphorus pentasulfide. Arsenic occurs naturally with phosphorus (they are both Group V-A elements) at a level of about 0.075 kg/kkg (0.15 lb/ton), of arsenic which is equivalent to 0.05 kg of As_2S_5 per kkg of product P_2S_5 (0.1 lb/ton). The entire still pot residue is about 0.5 kg/kkg (1 lb/ton). Periodically, these residues are removed and the solids are broken up and

buried. Approximately 17,000 l/kkg (4,000 gal/ton) of non-contact cooling water is used.

In the casting of liquid P_2S_5, the fumes from burning liquid (molten P_2S_5 auto-ignited) are scrubbed. Typically, the scrubber water contains 1.25 kg of combined P_2O_5 and SO_2 per kkg of product P_2S_5 (2.5 lb/ton). Because both P_2O_5 and SO_2 are absorbed by a water scrubber only with difficulty, the water flow rate is high, 30,000 l/kkg (7,200 gal/ton). These values reduce the concentrations of PO_2^{-3} and SO_3^{-2} in the scrubber effluent of 17 and 34 mg/l (respectively). Much lower scrubber flow rates could be used should weak caustic or lime be used instead of water.

Phosphorus Trichloride Manufacture

The batch or semicontinuous reactor/stills accumulate residues which are periodically but infrequently removed. These residues contain arsenic trichloride, which is higher-boiling than the corresponding phosphorus trichloride. Arsenic occurs naturally with phosphorus (they are both Group V-A elements) at a level of about 0.075 kg/kkg (0.15 lb/ton) of arsenic, which is equivalent to 0.05 kg of $AsCl_3$ per kkg of product PCl_3 (0.1 lb/ton). This is about half the quantity of total residue in the stills (exclusive of residual PCl_3 from the last batch or run before shutdown).

The average non-contact cooling water requirement is 54,000 l/kkg (13,000 gal/ton).

Water scrubbers collect PCl_3 vapors from the reaction, the product distillation, the product storage, and the product transfer operations, and hydrolyze these vapors to HCl and to H_3PO_3 (which may subsequently be oxidized to H_3PO_4). The quantity of PCl_3 collected is highly dependent upon the efficiency of the upstream condensers, since PCl_3 is highly volatile:

Temp, °C	Temp, °F	PCl_3 Vapor Pressure, mm Hg (27)
20	68	99
40	104	235
60	140	690
76	169	760

At Plant 037, sufficient heat transfer area was provided in the condensers to limit the raw waste load to 3 kg of HCl plus 2.5 kg of H_3PO_3 per kkg of product PCl_3 (6 lbs and 5 lb/ton). Approximately 5,000 l/kkg (1,200 gal/ton) of scrubber water were used to collect these wastes. Other smaller waste quantities of HCl and H_3PO_3 generated from tank car and returnable container cleaning operations have been included in these quantities.

These quantities are based upon the most reliable data available at Plant 037; overall material balances of product PCl_3 shipped vs. elemental phosphorus received. These data, validated over long periods of time for profitability purposes, show a total loss of phosphorus trichloride of 5 kg/kkg (10 lb/ton). An estimated breakdown of this loss is:

Transfer and Storage of Phosphorus,	1.0 kg/kkg (2 lb/ton)
Reactor/Still Residues,	0.1 kg/kkg (0.2 lb/ton)
Scrubber for Distillation Tail Gases,	2.5 kg/kkg (5 lb/ton)
Transfer of PCl_3,	1.0 kg/kkg (2 lb/ton)

Other than the estimated loss of elemental phosphorus and the reactor/still residues, the losses which become water-borne raw wastes amount to 3.5 kg/kkg (7 lb/ton). Upon hydrolysis, this stoichiometrically becomes 3 kg/kkg (6 lb/ton) of HCl plus 2.5 kg/kkg (5 lb/ton) of H_3PO_3. These material-balance data have been used because of their long-term confirmation. Direct measurements of waste water flow rates and of waste water constituent analysis were not relied upon in this case since accurate flow rate measurements were not possible in the existing plant configuration and since no statistically-meaningful analytical data had been collected.
The acid wastes from washing tank cars and tank trucks, and from washing used $POCl_3$ filter elements, are very small at present. Water use data taken from Plant 037, supplemented by independent analyses of the waste water, yielded the results in Table 8. Total raw waste generated in truck-loading, in tank-car cleaning, and in filter-element washing is 0.014 kg/kkg (0.028 lb/ton) of HCl plus 0.003 kg/kkg (0.007 lb/ton) of total phosphates.

TABLE 8

Minor Wastes from Plant 037 (PCl_3 and $POCl_3$)

		Truck-Loading Vent Scrubber	Tank Car Cleanout Water	Filter Element Washout Drum
Water Use:	l/kkg	8.8	10.5	0.46
	gal/ton	2.1	2.5	0.11
Constituent Analysis, mg/l:				
	Chloride	340	715	6,480
	Total PO_4	260	26	590
	Total Acidity	660	-	18,200
Raw Waste Load, kg/kkg:				
	Chloride	0.0030	0.0075	0.0030
	Total PO_4	0.0023	0.0003	0.0003
	Total Acidity	0.0058	--	0.0083
Raw Waste Load, lb/ton:				
	Chloride	0.006	0.015	0.006
	Total PO_4	0.005	0.001	0.001
	Total Acidity	0.012	--	0.017

Phosphorus Oxychloride Manufacture

The water scrubber for the distillation operation in the standard process (using P_2O_5 and Cl_2) typically collects 1.5 kg of HCl (anhydrous basis) and 0.25 kg of H_3PO_4 (100 per cent basis) per kkg of product $POCl_3$ (3 lbs and 0.5 lb/ton), and the scrubber for $POCl_3$ transferring collects about 0.2 kg of HCl and 0.15 kg of H_3PO_4 per kkg of product (0.4 lb and 0.3 lb/ton). Allowing for small wastes from returnable container cleaning operations, the standard raw waste load is 2 kg of HCl and 0.5 kg of H_3PO_4 per kkg of product (4 lbs and 1 lb/ton). Approximately 2,500 l/kkg (600 gal/ton) of water are used, so that the raw waste concentrations are 800 mg/l HCl and 200 mg/l H_3PO_4.

The source of the above data on raw waste loads was Plant 147 records and plant personnel analysis of these records. An independent verification of these results was not judged valid since at this plant neither an accurate determination of wastewater flowrate nor the collection of a distinct waste water sample from each unit operation contributing to the waste load was practical; and since statistically-valid background data was not at hand.

These waste quantities for $POCl_3$ manufacture are somewhat smaller than for PCl_3 manufacture since $POCl_3$ is less volatile (boiling point 107°C). In the batch process, the refluxing liquid is all PCl_3 at the start, but becomes increasingly richer in $POCl_3$.

The air-oxidation process presents a much more difficult task for the reflux condenser, since the vapors are highly diluted with non-condensibles. However, with the use of refrigerated condensers, the measured raw waste load is no different for this process. At Plant 037, data collected over three months from the reactor/still scrubber for $POCl_3$ manufacture, which had an estimated flowrate of 1,800 l/kkg (430 gal/ ton), had average net values of:

Chloride	669 mg/l
$CaCO_3$ acidity	1,213 mg/l

These data reduce to a raw waste of 1.2 kg/kkg (2.4 lb/ton) of HCl plus 0.35 kg/kkg (0.7 lb/ton) of H_3PO_4; which are extremely close to the corresponding values for Plant 147.

Where product $POCl_3$ is filtered, the used filter elements are first washed to hydrolyze the residual $POCl_3$. Disposable elements are then landfilled. The quantity of filtered solids retained on the elements is only a very small fraction of the weight of the used element. The elements are washed in a 55-gallon drum, so that a very small quantity of waste water (and of acid wastes) is involved compared to the scrubber waste load. Although there is no continuous withdrawal of residues from

$POCl_3$ distillations, very little residue accumulates. Twice a year, this residue (mostly glassy phosphates) is washed out with hot water.

The non-contact cooling water requirement for $POCl_3$ manufacture by either the standard or the alternate method is approximately 50,000 l/kkg (12,000 gal/ton).

Variability of Raw Wastes from the Production of Phosphorus Trioxide and Phosphorus Oxychloride

The data below indicates the variability of concentrations in the raw waste load at Plant 037.

Date (1973)	$CaCO_3$ Acidity, mg/l	Chloride, mg/l
2/27	1170	560
2/28	1220	603
3/1	1720	822
4/19	850	447
4/23	480	305
4/24	950	532
4/25	1430	851
4/26	1250	589
4/27	1300	1035
4/30	1120	518
5/1	1470	1040
5/2	1690	716
5/3	280	773
5/4	1340	603
5/7	1810	1000
5/8	1220	574
5/9	1290	716
Mean	1217	687
Std. Deviation	384	208
Std. Deviation	384	208
95% Conf. Int. (Single Day)	+_814	+_441

In this case, there was no damping capacity; the acidity and chloride concentrations were closely coupled to the manufacturing process. The comparison of the 95% confidence intervals with the daily data show only one point of 17 (for acidity) and no points outside (for chloride).

Based on these very limited samples of data, it appears that the classical statistics may be applied, but with extreme caution.

For the above sets of data from Plant 037, a value of $(X + 3\sigma) / X$ might represent a maximum allowable daily reading as a multiple of the mean:

Parameter	$(X + 3\sigma) / X$
Acidity Concentration	1.95
Chloride Concentration	1.91

This maximum allowable value would be extremely liberal, since a Students "t" value of 3 is equivalent to less than one reading in 100 being unduly rejected. To be even more liberal (since the data base for this analysis is extremely skimpy), the maximum value from the above table will be assumed, so that the effluent limitation guideline for the manufacture of PCl_3 and $POCl_3$ should be a maximum daily value no greater than twice the mean (as represented by consecutive 30 day averages).

pH can be controlled much more closely than other parameters. Hence, it is recommended that the pH limitation be met at all times.

TABLE 9

Summary of Raw Waste from Phosphorus-Concuming Plants

	H_3PO_4 (75%)	P_2O_5	P_2S_5	PCl_3	$POCl_3$
Phossy Water: P_4 conc, ppm	1,700	1,700	1,700	1,700	--
l/kkg P_4 consumed	580	580	580	580	--
kgP_4/kkg P_4 consumed	1	1	1	1	--
gal/ton P_4 consumed	140	140	140	140	--
lb /ton P_4 consumed	2	2	2	2	--
Process Water Wasted: l/kkg Pdt	--	500	30,000	5,000	2,500
gal/ton Pdt	--	120	7,200	1,200	600
Raw Waste Load, kg/kkg Pdt:					
HCl	--	--	--	3	2
H_2SO_3	--	--	1	--	--
$H_3PO_3 + H_3PO_4$	1	0.25	0.5	2.5	0.5
Raw Waste Load, lb /ton Pdt:					
HCl	--	--	--	6	4
H_2SO_3	--	--	2	--	--
$H_3PO_3 + H_3PO_4$	2	0.5	1	5	1
Concentrations, mg/l: HCl	--	--	--	600	800
H_2SO_3	--	--	34	--	--
$H_3PO_3 + H_3PO_4$	High	470	17	500	200
Process Water Consumed: l/kkg Pdt.	380	--	--	--	--
gal/ton Pdt	92	--	--	--	--
Cooling Water Used: l/kkg Pdt	91,000	29,000	16,600	54,000	50,000
gal/ton Pdt	22,000	7,000	4,000	13,000	12,000
Solid Wastes, kg/kkg Pdt:					
As Compounds	0.1	--	0.05	0.05	--
Total Residues	--	--	0.7	0.05	<0.05
Solid Wastes, lb /ton Pdt:					
As Compounds	0.2	--	0.1	0.1	--
Total Residues	--	--	1.4	0.1	<0.1

The Phosphate Subcategory

The aqueous wastes from this seqment of the industry arise from the use of wet dust scrubbing equipment for the finely divided solid products, and from processes which use excess process water which may become a waste stream.

Sodium Tripolyphosphate Manufacture

Exemplary Plants 006, 042, and 119 have no process wastes. The dust collected from the spray dryer qaseous effluent stream is added to the spray dryer solid product stream. The water used for subsequent scrubbinq of this qas stream from the spray dryer is then recycled to the mix area and is used as process water in the neutralization step. The cooling air used for the product tempering is vented into the spray dryer vent line upstream of the scrubbinq operation.

The neutralization step requires a total of 1,040 l/ kkq (250 gal/ton), of which 290 l/kkq (70 gal/ton) are recycled from the scrubber. Make-up water, 750 l/kkq (180 gal/ton), are added since water is evaporated in the product drying step. The makeup water is softened, and regeneration of the softener combined with boiler and cooling tower blowdowns amounts to 210 l/kkq (50 gal/ton); 70 per cent of which is from water treatment regeneration and 30 per cent from blowdowns. These blowdown wastes typically contain 1,500 mq/l of dissolved chlorides.

Calcium Phosphates

The raw aqueous wastes from the manufacture of food-grade calcium phosphates are from two primary and approximately equal sources: the centrate or filtrate from dewatering of the dicalcium phosphate slurry, and the effluent from wet scrubbers which collect airborne solids from product drying operations.
Both of these sources contain suspended, finely-divided calcium phosphate solids. It is normal practice in an integrated plant to partially recycle the scrubber water and to partially utilize the DCP centrate or filtrate as makeup scrubber water, as at Plant 003.The total raw wastes from this system are typically 4,200 l/kkq (1,000 qal/ton) containing 100 kq/kkq (200 lb/ton) of solids (a concentration of 2.4 per cent). An additional 30 kg/kkq (60 lb/ton) of dissolved solids (0.7 per cent of this waste stream) originates from phosphoric acid mists in the scrubbers and from excess phosphoric acid in the reaction liquid.

For non-food grade dicalcium phosphate plants, the water scrubbers which collect airborne solids normally operate at partial recycle. Since there is no waste from a dewatering operation, and since dry dust collection typically precedes wet scrubbing, the raw wastes are considerably

smaller than for the food-grade operation. Dry dust collection is typical since only one or two products are made, so that the collected solids may be added directly to the product stream without extensive segregation. Moreover, since purity requirements are considerably less severe, the product stream can tolerate such additions. With the above measures, the wet scrubber wastes are typically 420 l/kkg (100 gal/ton) containing 22.5 kg/kkg (45 lb/ton) of suspended solids (a concentration of 5 per cent) plus 4 kg/kkg (8 lb/ton) of dissolved phosphates from acid mists (0.7 per cent). At the notable Plant 182, this bleed stream from the wet scrubber recirculation system is charged directly to the neutralization reactor; hence, this plant had no discharge whatever. As an added feature, this notable plant used cooling water blowdown as makeup to the airborne-solids scrubbing system, thereby eliminating all aqueous discharges (except for the effluent from regeneration of the water softener).

For the non-food grade plants, however, acid defluorination is an additional source of raw wastes (unless already-defluorinated acid is delivered to the plant). Wet-process phosphoric acid (54 per cent P_2O_5) contains approximately one per cent fluorine. Upon silica treatment, 13.5 kg per kkg of acid (27 lbs/ ton), or 10.5 kg of silicon tetrafluoride product dicalcium phosphate dihydrate (21 lb/ton), are liberated. When hydrolyzed in the acid scrubber, the raw waste contains 12 kg/kkg product (24 lb/ton) of combined fluosilicic acid (H_2SiF_6), hydrofluoric acid (HF) and silicic acid (H_2SiO_3). These raw wastes are contained in a scrubber water flow of 6,300 liters/ kkg (1,500 gal/ton), so that the combined concentration of fluosilicic acid, hydrofluoric acid and silicic acid is 1,900 mg/l. For any plant manufacturing calcium phosphates of any grade, non-contact cooling water is used in reactors and/or in dried product coolers.

Other possible sources of aqueous wastes are from regeneration of water softeners and from storm water runoff (all exterior surfaces of calcium phosphate plants become coated with fine lime and/or phosphate dusts).

In dry-product plants, a significant housecleaning effort must be continually maintained. In non-food grade calcium phosphate plants, the dry product sweepings (from dust, spills, etc) are added to the process stream. In food-grade plants, however, the sweepings (consisting of lime. lime grit, and calcium phosphates) are wasted. Typically, this solid waste amounts to 10 kg/kkg (20 lb/ton).

TABLE 10

Summary of Raw Wastes from Phosphate Plants

	Sodium Tripoly-Phosphate	Food Grade Calcium Phosphates		Animal Feed Calcium Phosphates	
		Dewatering	Solids Scrubbing	Acid Deflu-orination	Solids Scrubbin
Process Water Wasted:					
l/kkg Pdt	0	2,100	2,100	6,300	420
gal/ton Pdt	0	500	500	1,500	100
Raw Waste Load, kg/kkg Pdt:					
TSS	-	50	50	-	22.5
Dissolved PO_4	-	15	15	-	4
HF, H_2SiF_6, H_2SiO_3	-	-	-	12	-
Raw Waste Load, lb/ton Pdt:					
TSS	-	100	100	-	45
Dissolved P_4	-	30	30	-	8
HF, H_2SiF_6, H_2SiO_3	-	-	-	24	-
Concentrations, mg/l:					
TSS	-	24,000	24,000	-	54,000
Dissolved PO_4	-	7,000	7,000	-	7,000
HF, H_2SiF_6, H_2SiO_3	-	-	-	1,900	-
TDS, mg/l	-	7,000	7,000	1,900	7,000
Solid Wastes:					
kg/kkg Pdt	0	10		-	-
lb/ton Pdt	0	20		-	-

SECTION VI

SELECTION OF POLLUTION PARAMETERS

INTRODUCTION

Section V of this report quantitatively discussed the raw wastes generated in the phosphate manufacturing industry. The following were identified as being constituents of the industry's process waste waters:

Suspended Inorganic Solids
Dissolved Phosphates or Phosphites
Dissolved Sulfates or Sulfites
Dissolved Fluorides or Fluorosilicates
Dissolved Chlorides
Total Dissolved Solids
Acidity or low pH
Heat (High Temperature)
Elemental Phosphorus
Arsenic Compounds
Vanadium, cadmium, radium and uranium

The following discussion examines each of the above constituents and their impact upon receiving waterways from a chemical, a physical and a biological viewpoint. Additional, constituents such as hexavalent chromium, iron, alkalinity, and hardness, which are of typical concern whenever blowdowns from cooling towers, boilers and water treatment facilities are involved, are noted here but are not discussed in detail in this study (which deals more specifically with the process wastes of the phosphate industry).

SUSPENDED INORGANIC SOLIDS

Suspended solids discharged into receiving waters adversely impair navigation, recreation, water supply and fish propagation water uses. Navigation may be impaired as a result of sedimentation in quiescent regions in the stream bed. Recreational and water supply uses would be impaired as a result of turbidity of the water. The fish population suffers from loss of suitable breeding areas, loss of food chain organisms because of change in benthic characteristics, fish kills from excessive turbidity, and reduction of light penetration into the streams.

Suspended solids affect fisheries directly by covering the bottom of a stream with a blanket of material which kills out the bottom fauna, directly depriving the fish of a considerable part of their food (which lies at the bottom), or indirectly by eliminating species in the food chain. In addition, portions of the bottom, usually in the shallower

parts of the stream, provide nesting sites and spawning grounds for certain species.

The suspended solids directly affect fish through mechanical and abrasive action which clogs or otherwise injures the gills and respiratory structures. Although normal healthy fish secrete mucus to wash away suspended solids as they lodge on gills and other exposed parts, the synergistic action of other pollutants such as small amounts of acid wastes greatly augments the abrasion by solids by inhibiting the normal flow of mucus.

Indirectly, suspended solids affect fisheries by effectively screening out the light necessary to species of flora which may be important parts of the food chain. Also indirectly, but none the less effectively, solids which settle at the bottom trap organic wastes which might otherwise be dispersed, thereby increasing the oxygen demand at the bottom of the stream with disastrous results to the bottom fauna.

Of special concern in the phosphate industry is that much of the suspended solids in the raw wastes are calcium phosphates. It has recently been shown that calcium phosphates deposited in bottom muds of lakes are not inert solids, but are indeed available for uptake by the lake waters, and are a prime source of nutrients for algae blooms and a prime cause for lake eutrophication.

DISSOLVED PHOSPHATES AND PHOSPHITES

Phosphites are oxidized to phosphates in streams, exerting a chemical oxygen demand upon the streams.

The controversy over the nutrient and eutrophication effects of phosphates has received much attention in recent years, resulting from the phosphate constituent in domestic wastewater. The average concentration in domestic waste water is 30 mg/l (as PO_4); and the domestic waste quantities are about 1.6 kg (3.5 lbs) per capita per year, one-third of which are from human excretions and two-thirds from synthetic detergents. Runoff of synthetic fertilizers also contribute heavily to phosphate pollution of surface waters. For the purpose of this study, it appears sufficient to rely for guidance upon the massive effort and expenditure to remove phosphates from domestic waste water to come to the conclusion that dissolved phosphates from the industry under study are indeed a pollution parameter.

The natural concentration of phosphates in sea water is 0.7 to 1.4 mg/l.

DISSOLVED SULFATES OR SULFITES

Sulfites are oxidized to sulfates in streams, exerting a chemical oxygen demand upon the streams.

Sulfates are not particularly harmful, but are a major constituent of the total dissolved solids in waste waters from this industry (and are discussed separately as such).

DISSOLVED FLUORIDES AND FLUOROSILICATES

Fluosilicic acid and its salts are highly deleterious materials. They also decompose to form fluorides. Hydrolysis causes fluosilicates to form gelatinous precipitates which are difficult to settle and dewater in treatment operations.

Fluorides are present in natural waters in concentrations less than 1 mg/l, and are widely used as drinking water additives in concentrations of a few mg/l for beneficial dental effects. However, at higher concentrations than 7 or 8 mg/l, fluorides have caused severe damage to bone structures. Fluorosis from airborne fluorides has been documented in cattle and in humans in the proximity of phosphate-rock mining operations.

Fluorides and fluorosilicates are definitely harmful materials, and can be identified as pollution parameters for the purposes of this study.

DISSOLVED CHLORIDES

Dissolved chlorides are a major constituent of the total dissolved solids in waste waters from this industry (and are discussed separately as such).

Sodium and calcium chlorides are found naturally in unpolluted waters, but are harmful to fish in high concentrations.

The natural salinity of river water in the Chesapeake Estuary is 9.5 to 11.0 mg/l of chloride; and the natural salinity of ocean water is 7,000 to 10,300 mg/l of chloride.

TOTAL DISSOLVED SOLIDS

Unpolluted natural waters contain small quantities of dissolved carbonates, chlorides, phosphates, sulfates and nitrates. All of the substances in solution in river water exert osmotic pressure on the aquatic organisms, and many of these substances are physiologically active, so that the organisms have become adapted to this salt complex. Most aquatic species will tolerate changes of considerable magnitude in the relative amounts of these salts provided the total dissolved solids remains constant.

The specific conductance, a direct measure of dissolved inorganic solids, lies between 150 and 500 umhos/cm in inland streams and rivers which support good, mixed fish faunas. In the Western plains and desert

areas, natural quantities of dissolved solids are higher, with specific conductance ranging to 2,000 umhos/cm. The blood of fresh-water fish contains approximately 7,000 mg/l of dissolved salts (mainly NaCl). If the total dissolved solids in the external medium exceed this 7,000 mg/l by much, water will be withdrawn by osmosis from the gills of fish and from other delicate external organs of various species of aquatic life with lethal effects.

ACIDITY OR LOW pH

Acidity, or low pH, kills fish through the precipitation and coagulation of the mucus on the gills and by the coagulation of the gill membranes themselves (specifically the proteins in the membranes). This precipitation and coagulation proceeds rapidly below a pH of 4.5; but species unprotected by mucus (such as Daphnia magna) are killed below a pH of 5.5

A typical State water quality standard (that of Maryland) specifies a pH of 6.0 to 8.5 regardless of water use.

HEAT (HIGH TEMPERATURE)

The impact of high water temperatures takes several forms which may also act synergistically:

(a) Alteration of the physical properties of water.
(b) Decrease in the solubility of oxygen upon which most aquatic organisms depend.
(c) Increase in the rate of chemical and biochemical reactions, particularly in the oxidation of organic wastes (thereby decreasing the level of dissolved oxygen).
(d) At sufficiently high temperatures, organisms are killed directly.
(e) Physiological processes such as reproduction, development and metabolism are temperature-dependent.
(f) Temperature anomalies can block the passage of anadromous fish, greatly reducing future populations.

Most fish are poikilothermal animals whose body temperature follows changes in environmental temperatures rapidly and precisely. The tolerance of fish to high temperatures is dependent upon the normal temperature to which the fish are acclimated and to the abruptness of temperature changes (both temporally and spatially). In general, however, the upper temperature limits for fish survival are in the range of 25 to 35°C (75 to 95°F).

A typical State water quality standard (that of Maryland) specifies the following with respect to heat rise regardless of water use:

Type of Water	Natural Temp, °F	Max. Temp Rise, °F	Maximum Temp, °F
Tidal	50	20	60
	50	10	90
Non-Tidal	50	20	60
	50	10	93

ELEMENTAL PHOSPHORUS

Elemental phosphorus has been identified as an extremely harmful material in very small amounts. The lethal dose for humans is 100 mg and the chronic dose is 1 mg/day. Ingestion of elemental phosphorus by the human body causes bone and liver damage.

ARSENIC COMPOUNDS

The dangerous properties of arsenic compounds in very small amounts is well known. The Federal Water Quality Administration presented a summary of the hazards of arsenic. The U.S. Public Health Service Drinking Water Standards set a maximum concentration of 0.05 mg/l, with a recommended limit of 0.01 mg/l. There is a continuing controversy over the health hazards of minute quantities of arsenic either naturally entering the ground or surface waters; and particularly over the arsenic that occurs naturally in phosphates (at a level of As:P of 75 mg/l) and is subsequently discharged into municipal waste water.

VANADIUM, CADMIUM, RADIUM AND URANIUM

Phosphate rock ore does contain trace amounts of one or more of these elements. These elements are chemically and/or radioactively harmful as detailed in Reference 72, but are not in such concentrations as to cause a serious health problem.

CONCLUSION

In view of the data presented above, it is judged that all of the mentioned waste constituents generated in the phosphate industry be identified as pollution parameters as defined in the Federal Water Pollution Control Act Amendments of 1972.

In the paragraphs above, the harmful characteristics are given of all the parameters that are encountered in the phosphate manufacturing point source category. Table 11 summarizes the parameters found for each chemical. The chemicals PCl_3 and $POCl_3$ require further consideration.

TABLE 11

WASTE WATER CONSTITUENTS OF PHOSPHATE CATEGORY

Chemical	Parameter										
	TSS	PO_4 PO_3	SO_4 SO_3	F SiF_6	Cl	TDS	low pH	Heat	P_4	As	V, Cd, Ra, U
P_4 & Fe_2P	0	0	0	0		0	0	0	0	0	0
H_3PO_4		0				0	0	0	0	0	
P_2O_5		0				0	0	0	0		
P_2S_5		0	0			0	0	0	0	0	
PCl_3	X	0			0	X	X	0	0	0	
$POCl_3$	X	0			0	X	X	0	0	0	
$Na_5P_3O_{10}$		0				0	0	0	0		
$CaHPO_4$ (feed grade)	0	0		0		0	0	0	0		
$CaHPO_4$ (food grade)	0	0				0	0	0	0		

Although many parameters appear in the waste streams from these plants only those primary parameters signified by "x" need be used to set effluent standards.

The remaining parameters for PCl_3 and $POCl_3$ signified by zeros are adequately treated if the primary parameters are so treated. Special consideration for these two chemicals is necessary since they are the only exceptions to the proposed guidelines (no discharge of process waste water pollutants) for this category.

SECTION VII

CONTROL AND TREATMENT TECHNOLOGY

INTRODUCTION

Section V of this report quantitatively discussed the specific water uses in the phosphate industry and the raw wastes from this industry prior to control and/or treatment of these wastes. Section VI identified the constituents of the raw wastes which are classified as pollutants. Table 11 summarizes the pollutant constituents found as raw wastes in each of the three segments of the industry:

Two major observations may be made from table 11:

1. Classical sanitary engineering practices that treat effluents containing organic material or that are aimed at reducing biological oxygen demand are inapplicable to the phosphate manufacturing industry, where such pollutant constituents are usually very low and not a significant factor. Hence, control and treatment of the wastes in this industry are of the chemical and chemical engineering variety, and include neutralization, pH control, precipitation, ionic reactions, filtration, centrifugation, ion exchange, demineralization, evaporation and drying.

2. A limited number of pollutant constituents characterizes the entire industry, crossing the lines between segments of the industry. Hence, the control and treatment techniques should be similar throughout the industry.

In this section of the report, the control and treatment technology is discussed in considerable detail. Much of this discussion is based upon observed actual abatement practice in the industry; the accomplishments of independently-verified sampling data of plant effluents.

IN-PROCESS CONTROLS

Control of the wastes includes in-process abatement measures, monitoring techniques, safety practices, housekeeping, containment provisions and segregation practices.

Segregation of Water Streams

Probably the most important waste control technique, particularly for subsequent treatment feasibility and economics, is segregation.

Incoming pure water picks up contaminants from various uses and sources including:

1. non-contact cooling water
2. contact cooling water
3. process water
4. washings, leaks and spills
5. incoming water treatments
6. cooling tower blowdowns
7. boiler blowdowns

If wastes from these sources are segregated logically, their treatment and disposal may sometimes be eliminated entirely through use in other processes or recycle. In many instances, the treatment costs, complexity and energy requirements may be significantly reduced. Unfortunately, it is a common practice today to blend small, heavily contaminated streams with large non-contaminated streams such as cooling water effluents. Once this has been allowed to happen, treatment costs, energy requirements for these treatments, and the efficient use of water resources have all been compromised.

In general, plant effluents can be segregated into:

1. Non-contaminated Cooling Water. Except for leaks, non contact water has no waste pickup. It is usually high volume.

2. Process Water. Usually contaminated but often small volume.

3. Auxiliary Streams. Ion exchange regenerants, cooling tower blowdowns, boiler blowdowns, leaks, washings - low volume but often highly contaminated.

Although situations vary, the basic segregation principle is don't mix large uncontaminated cooling water streams with a smaller contaminated process and auxiliary streams prior to full treatment and/or disposal. It is almost always easier and more economical to treat and dispose of the small volumes of waste effluents - capital costs, energy requirements, and operating costs are all lower.

In the phosphorus chemicals industry, many plants have accomplished the desired segregation of water streams, often by a painstaking rerouting of sewer lines which have existed for many years. Among these plants which are notable in this respect are Plants 003, 037, 042, 075, and 182.

Recycle of Scrubber Water

The widespread use of water for scrubbing of tail gases in this industry has unfortunately led to many examples where once-through scrubber water is the mode of operation. However, there are several plants notable in this respect which recycle scrubber water from a sump, thus satisfying the scrubber water flowrate demands (based upon mass transfer considerations) while retaining control of water usage. These notable plants are TVA (Muscle Shoals, Alabama), and Plants 003 and 182.

Recycle of scrubber water permits the subsequent treatment of much smaller quantities of waste water with much higher concentrations of polluting constituents. Both of these attributes make waste water treatment more economical, and in some cases, more efficient, from a removal viewpoint.

Dry Dust Collection

A drastic reduction in the aqueous waste load may be made by replacing wet scrubbing systems with baghouses, or alternately, by placing cyclone dust collectors upstream of wet scrubbers. This approach is feasible because baghouses have recently been improved in design to the point where operation and maintenance costs are not excessive, where solids collection efficiences exceed those of wet scrubbers, and where operating temperature ranges have been extended with high-temperature media development. Dry collected solids may be returned to the product stream, provided that a separate collector is installed for each product. This is a change in approach for the typical multi-product phosphate plant, since conventional practice has been to centralize the collection and treatment functions across product lines. With dry separate collection, the product recovered may significantly contribute towards the operating cost of the collectors.

Plants in this industry which are notable in this respect by having at least some dry dust collection include Plants 003, 006, 042, 119, and 182.

Housekeeping and Containment

Containment and disposal requirements may be divided into several categories:

1. minor product spills and leaks
2. major product spills and leaks
3. upsets and disposal failures
4. storm water runoff
5. pond failures
6. vessel and container cleanout

Minor Spills and Leaks

There are minor spills and leaks in all industrial chemical manufacturing operations. Pumps seals leak, hoses drip, washdowns of equipment, pipes and equipment leak, valves drip, tank leaks occur, solids spill and so on. These are not going to be eliminated. They can be minimized and contained. In some cases the products are valuable; in other cases, personnel safety and prevention of corrosion may become paramount.

Reduction techniques are mainly good housekeeping and attention to sound engineering and maintenance practices. Pump seals or types of pumps are changed. Valves are selected for minimizing drips. Pipe and equipment leaks are minimized by selection of corrosion-resistant materials.

Containment techniques include drip pans under pumps, valves, critical small tanks or equipment, and known leak and drip areas such as loading or unloading stations. Solids can be cleaned up or washed down. All of these minor leaks and spills should then go to a containment system, catch basin, sump pump or other area that collects and isolates all of them from other water systems. They should go from this system to suitable treatment facilities.

Of special importance in the phosphorus-consuming subcategory of the industry is the containment of phossy water from phosphorus transfer and storage operations. While displaced phossy water is nominally shipped back to the phosphorus-producing facility, current practice in phosphorus storage tanks is to maintain a water blanket for safety reasons by makeup water addition and by subsequent overflow over a weir or excess water.

This method of level control is unacceptable since it results in the discharge of phossy water. One way to ensure zero discharge is to install an auxiliary tank to collect phossy water overflows from the phosphorus storage tank; this system can be closed-loop by reusing this phossy water from the auxiliary tank as makeup for the main phosphorus tank. This scheme preserves the positive safety features of the existing level control practice and also safeguards against inadvertent large discharges resulting from leaky or maladjusted water makeup valves.

Major Product Spills and Leaks

These are catastrophic occurrences with major loss of product, tank and pipe ruptures, open valves, explosions, fires, and earthquakes.

No one can predict, plan for or totally avoid these happenings, but they are extremely rare. Probably the most common of these rare occurrences is tank or valve failures. These can be handled by adequate dikes able

to contain the tank volume. All acid, caustic or toxic material tanks should be diked to provide this protection. Other special precautions may be needed for flammable or explosive substances. Plant 037 is a prime example where product tanks and trsnsfer pumps have been systematically diked for containment or spills.

Upsets and Disposal Failures

In many processes there are short term upsets. These may occur during startup, shutdown or during normal operation. The phosphorus-consuming subcategory and the phosphate subcategory of this industry may be more vulnerable to this type of upset since so many of the processes are batch-type operations with much more direct operator control then the typical large-scale automated continuous processes in the chemical industry.

These upsets represent a small portion of overall production but they nevertheless contribute to waste loads. Hopefully, the upset products may be treated, separated, and largely recycled. In the event that this can not be done, they must be disposed of.

One very special problem in the phosphorus-consuming subcategory is the inadvertent spill of elemental phosphorus into a plant sewer line. Past practice has been to let it remain in the sewer and to ensure a continuous water flow to prevent fire. There has been general reluctance to clean it out since phosphorus burns when exposed to air. With this practice, of course, all water flowing in that sewer from that time on contains phosphorus and ostensibly becomes contaminated.

Provisions can be made for collecting, segregating and bypassing such phosphorus spills. One method is the installation of a trap of sufficient volume just downstream of reaction vessels, with appropriate installations and valving to enable the bypass of that trap after a spill has occurred and the offline removal and cleaning of the trap (with safe disposal of the phosphorus).

Stormwater Runoff

The phosphates segment of this industry is characterized by the handling, storing, conveying, sizing, packaging and shipping of finely-divided solid products. Typically, a phosphates plant has all exterior surface of buildings, equipment and grounds covered with dusts. An area of concern is the pickup of these solids by stormwater either as suspended solids or as dissolved solids. Of course, washing down of these dusts is not acceptable; the dry solids must be collected. Where possible, the solids may be returned to appropriate process streams. Where purity requirements prohibit this return, adequate means for safe disposal of solid wastes must be provided.

Plants 003, 042 and 182 are examples of plants which have positive continual cleanup programs for solids, which minimize stormwater runoff. Most plants (with considerable credit to air pollution abatement practices) have also minimized the quality of airborne dusts.

The very practice of process water segregation discussed previously has led to the direct discharge of stormwater without treatment. Little is known from a quantitative standpoint about the severity of this problem in the phosphates segment of the industry, or to what extent containment and treatment of stormwater is required. In the phosphorus manufacturing segment of the industry, where large quantities of dusts are handled, Plant 159 collects approximately 10 kg/kkg (20 lb/ton) in a settling pond for stormwater and non-contact cooling water.

Pond Failures

Unlined ponds are the most common treatment facility used by the industry. Failures of such ponds occur because they are unlined and because they are improperly constructed for containment in times of heavy rainfall.

Unlined ponds may give good effluent control if dug in impervious clay areas or poor control if in porous, sandy soil. The porous ponds will allow effluent to diffuse into the surrounding earth and water streams. This may or may not be detrimental to the area, but it is certainly poor waste control. Lined ponds are the only answer in these circumstances.

Many ponds used today are large low-diked basins. In times of heavy rainfall, much of the pond content is released into either the surrounding countryside, or, more likely, into the nearest body of water. Again, whether this discharge is harmful or not depends on the effluent and the surrounding area, but it does represent poor effluent control.

Good effluent control may be gained by a number of methods, including:

1. Pond and diking should be designed to take the anticipated rainfall - smaller and deeper ponds should be used where feasible.

2. Control ponds should be constructed so that drainage from the surrounding area does not innundate the pond and overwhelm it.

3. Substitution of smaller volume (and surfaced) treatment tanks, coagulators or clarifiers can reduce rainfall influx and leakage problems.

Vessel and Container Cleanout

One common characteristic of the phosphorus-consuming subcategory of the industry is the planned accumulation of residues in reaction vessels and stills, with infrequent shutdowns to clean and remove these residues. In many cases, the residues are washed down with firehoses and the wastes discharged. This practice is clearly unacceptable. One alternative is the diking of the area (as described previously), with collection and treatment of the aqueous wastes, in conjunction with an effort to minimize the quantities of washwater.

A similar situation exists with regard to the cleaning of returnable containers (drums, tank trucks and tank cars) prior to reuse. Since these are routine operations, procedures and facilities must be made available for minimizing the quantities of waste water and for the collection and treatment of these waste waters.

Monitoring Techniques

Since the chemical process industry is among the leaders in instrumentation practices and application of analytical techniques to process monitoring and control, there is rarely any problem in finding technology applicable to waste water analysis. Acidity and alkalinity are detected by pH meters, often installed in-line for continuous monitoring and control.

Dissolved solids may be estimated by conductivity measurements, suspended solids and turbidity, and specific ions by wet chemistry and colorimetric measurements. Flow meters of numerous varieties are available for measuring flow rates.

The pH meter is the most universal of the in-line monitoring instruments. Spills, washdowns and other contributions become quickly evident. Alarms set off by sudden pH changes alert the operators and often lead to immediate plant shutdowns or switching effluent to emergency ponds for neutralization and disposal. Use of in-line pH meters will be given additional coverage in the control and treatment sections for specific chemicals.

Monitoring and control of harmful materials such as phosphorus and arsenic is often so critical that batch techniques may be used. Each batch can be analyzed before discharging. This approach provides absolute control of all wastes passing through the system. Unless the process is unusually critical, dissolved solids are not monitored continuously. This follows from the fact that most dissolved solids are rather inert. Chemical analyses on grab or composite effluent samples are commonly used to establish total dissolved solids, chlorides, sulfates, and other low ion concentrations.

Summary

The preceding narrative described general treatment practices and in-plant controls. The following discusses specific abatement measures recommended for each subcategory.

TREATMENT OF WASTE WATERS IN THE PHOSPHORUS SUBCATEGORY

Neutralization of Acidic Waste waters

Virtually every manufacturing process in the phosphate industry results in a raw waste load of significant acidity. In some cases, advantage is taken of the availability of alkaline waste to at least partially neutralize the acid waste streams.

At phosphorus-producing plants, some neutralization of acidic calciner scrubber liquor is achieved by the alkaline slag or by the slightly alkaline slag quench liquor (see Table 7). At TVA, the slag is granulated by quenching with a high-velocity jet of calciner scrubber liquor plus process cooling water; the granulated slag (with its large surface area) effectively neutralizes the acidic liquors. At plants not granulating slag, the slightly-alkaline slag quench liquors are mixed with the highly-acidic scrubber liquors for partial neutralization. This is practiced at Plants 028 and 181.

Except for this one case where granulated slag is available, lime or limestone neutralization cf acid waste streams is standard practice in this industry, as observed at Plants 003, 006, 028, 159, 181, and 182. The relative chemical costs reported by Downing, Kunin and Polliot(28), listed in Table 12, show that limestone or lime are far and away more economical than other neutralizing materials. Limestone is the lower cost material (approximately $11/kkg ($10/ton)) but suffers the disadvantages of slower reaction and lower obtainable pH than with lime. Lime costs are approximately $22/kkg ($20/ton).

With the exception of hydrochloric acid from PCl_3 and $POCl_3$ manufacturing facilities, every acid waste in the phosphorus chemicls industry forms insoluble or slightly-soluble calcium salts when treated with lime:

Acid	Calcium Salt	Solubility*, mg/l
H_3PO_4	$Ca(H_2PO_4)_2.H_2O$, MCP	18,000
"	$CaHPO_4.2H_2O$, DCP	200
"	$Ca_3(PO_4)_2$, TCP	25
HF, H_2SiF_6	CaF_2	16
H_2SiO_3	$CaSiO_3$	95
H_2SO_4	$CaSO_4.2H_2O$	2,410
H_2SO_3	$CaSO_3.2H_2O$	43
H_3PO_3	$2\ CaHPO_3.3H_2O$	(Slightly Soluble)

*Between 17°C and 30°C.

It is readily apparent that lime treatment (with excess lime) not only performs neutralization of acidic waste waters from the phosphate

TABLE 12 Relative Chemical Costs for Neutralizing Acid Wastes
Source: Downing, Kunin and Polliot[28]

NEUTRALIZING MATERIAL	Relative Cost per Pound Alkali*	Relative Weight Alkali Required Per Pound Acid			Relative Cost Per Pound Acid		
		H_2SO_4	HCl	H_3PO_4	H_2SO_4	HCl	H_3PO_4
Lump limestone, high Ca	1.16	110	148	165	128	172	191
Lump limestone, dolomitic	1.00	94	127	141	94	127	141
Pulv. limestone, high Ca	1.59	110	148	165	175	235	262
Pulv. limestone, dolomitic	1.37	94	127	141	129	174	193
Hydrated lime, high Ca	3.06	79	107	119	242	327	364
Hydrated lime, dolomitic	2.50	65	87	98	162	217	245
Pebble lime, high Ca	2.07	60	80	90	124	166	186
Pebble lime, dolomitic	1.87	54	73	81	101	136	151
Pulv. quicklime, high Ca	2.18	60	80	90	131	174	196
Pulv. quicklime, dolomitic	1.97	54	73	81	106	144	159
Sodium bicarbonate	20.65	173	233	260	3570	4810	5360
Soda ash	13.08	119	160	179	1560	2090	2340
Caustic soda (50%)	9.96	164	220	246	1630	2190	2450
Ammonia (anhyd.)	5.90	35	47	53	207	277	313
Magnesium oxide	3.90	42	56	63	164	218	246

*Delivered cost including freight.

manufacturing industry, but also demineralizes most waste waters by precipitating calcium salts. This then produces a solid waste which may be disposed of by landfilling.

The effectiveness of the control specified in the preceding paragraphs is summarized in table 13 for four plants (TVA, 181, 028 and 159). Data for plants 028 and 159 were taken from tables 14 and 15 which include a complete analysis on the intake and effluent waters.

Removal of Anions (Except Chlorides) From Acidic Wastes

Neutralization of acid waste waters with lime also precipitates the calcium salts of all acid wastes in this industry (with the exception of hydrochloric acid from PCl_3 and $POCl_3$ manufacture). This treatment is widespread throughout the phosphate manufacturing industry, and represents a class of treatment technology which has widespread validation and demonstration on plant-scale installations.

Other technologies for removing dissolved solids (except chlorides) are also presented in this section, with a somewhat lesser degree of full-scale validation than lime treatment.

Treatment of Acidic Fluoride Wastes

Acidic fluoride wastes are generated by the phosphorus production segment of the industry and by the defluorination of wetprocess acid in the manufacture of animal-feed grade calcium phosphates. These waste waters containing large quantities of hydrofluoric, fluosilicic and silicic acids are neutralized with lime (which breaks down H_2SiF_6 at high pH) to precipitate calcium fluoride and gelatinous hydrated silica. Lime treatment is standard operating technology at Plants 128, 159, 181 and 182.

Like lime treatment of phosphoric acid, lime treatment of acidic fluoride wastes is enhanced by the decreased solubility of CaF_2 at high pH:

$$CaF_2(s) \longrightarrow Ca + 2F \xrightarrow{2H_2O} Ca + 2OH + 2HF$$

The equilibrium is driven to the far left by the addition of excess lime. The theoretical solubility of CaF_2 may be calcined in much the same manner as outlined for $Ca_3(PO_4)_2$, using the ionization constant of HF and the pure water solubility data for CaF_2.

There has been recent commercial interest in recovering the fluoride values in acidic waste waters. Two commercial processes have been

TABLE 13 Summary of Control & Treatment Techniques at Phosphorus-Producing Plants
(For Process Waters Other Than Phossy Water)

	TSS	Total Acidity (Alkalinity)	TDS	Fluoride	Sulfate	Total Phosphate
Raw Waste Loads (from Sec. V)						
Kg/Kkg	42.5	54.5	-	53.5	111	25
lb /ton	85	109	-	107	222	50
Waste Discharged, Kg/Kkg:						
TVA	0	0	0	0	0	0
Plant 181	0	0	0	0	0	0
Plant 028 (Net)	0.5	1	4	0.1	2	0.2
Plant 159 (Gross)	0.5	(12)	22	0.04	3	0.8
Waste Discharged, lb /ton:						
TVA	0	0	0	0	0	0
Plant 181	0	0	0	0	0	0
Plant 028 (Net)	1	3	9	0.2	4	0.4
Plant 159 (Gross)	1	(24)	45	0.07	7	1.6
Control & Treatment Efficiency, Per Cent:						
TVA	100	100	100	100	100	100
Plant 181	100	100	100	100	100	100
Plant 028	99	-	-	99+	98	99
Plant 159	99	-	-	99+	97	97

TABLE 14 - Effluent from Plant 028 (Discharge No. 001)

Effluent Flowrate = 103-200 l/kkg (24,700 gal/ton)

Notes: 1. This Discharge is from Cooling Water and Dust Collector Water.
2. There is Zero Discharge of Phossy Water and Calciner Scrubber Water

	Water & Wastewater Analysis				Net Effluent Qty Kg/Kkg		Net Effluent Qty Lb /ton	
Constituent	Units	Intake	Effluent Plant Data	Effluent Ind. Data	Plant Data	Inde-pendent Data	Plant Data	Inde-pendent Data
pH	-	-	7.3-9.5	7.55	-	-	-	-
Turbidity	FTU	26	32	30	-	-	-	-
Conductivity	$\frac{\mu mhos}{cm}$	359	408	300	-	-	-	-
TSS	mg/l	15	15	20	-	0.5	0	1
TDS	mg/l	160	202	176	4	2	9	3
$CaCO_3$ Alkalinity	mg/l	116	110	130	(-1)	1	(-1)	3
$CaCO_3$ Acidity	mg/l	-	-	-	-	-	-	-
Chloride	mg/l	<0.1	4.1	8	0.4	0.8	0.9	1.6
Fluoride	mg/l	0.19	1.14	0.87	0.10	0.07	0.20	0.14
Sulfate	mg/l SO_4	6.4	13.8	26	0.8	2.1	1.5	4.1
COD	mg/l	2.0	53.5	25	5.3	2.4	10.6	4.8
Total Hardness	mg/l	116.7	129.7	160	1	4	3	8
Total Phosphate	mg/l PO_4	1.2	2.4	-	0.12	-	0.25	-
Ortho Phosphate	mg/l PO_4	1.2	2.4	2.9	0.12	0.18	0.25	0.35

TABLE 15 Effluent from Plant 159

Notes: 1. There is Zero Discharge of Phossy Water
2. These data are Plant Data, Not Independently Verified

Effluent Flowrate = 36,100 l/kkg (8,640 gal/ton)

Constituent	Units	Water & Waste-water Analysis		Gross Effluent Quantity		Net Effluent Quantity	
		Treated Intake	Effluent	Kg/kkg	lb /ton	Kg/kkg	lb /ton
pH	-	7.5	8.0-8.5	-	-	-	-
Turbidity	FTU	<1	11	-	-	-	-
Conductivity	$\frac{\mu mhos}{cm}$	966	898	-	-	-	-
TSS	mg/l	11	15	0.54	1.08	0.14	0.29
TDS	mg/l	617	620	22.4	44.8	0.11	0.22
$CaCO_3$ Alkalinity	mg/l	358	323	11.7	23.4	(-1.3)	(-2.6)
$CaCO_3$ Acidity	mg/l	-	-	-	-	-	-
Chloride	mg/l	50	53	1.9	3.8	0.11	0.22
Fluoride	mg/l	0.84	1.01	0.04	0.07	0.0061	0.0122
Sulfate	mg/l SO_4	91.5	90.0	3.2	6.5	(-0.054)	(-0.108)
COD	mg/l	-	6	-	0.2	0.22	0.43
Total Hardness	mg/l	465	468	16.9	33.8	0.11	0.22
Total Phosphate	mg/l PO_4	18.0	22.4	0.8	1.6	0.16	0.32
Ortho Phosphate	mg/l PO_4	15.9	19.3	0.7	1.4	0.12	0.24

developed to manufacture hydrofluoric acid, and one to manufacture synthetic cryolite for the aluminum industry.

Removal of Suspended Solids

The raw waste streams from the phosphorus-producing segment and from the phosphate subcategory of the industry contain considerable quantities of suspended solids. Moreover, the chemical treatment of acidic wastes described in the previous section produced in many instances, additional suspended solids.

To facilitate settling of suspended solids, large quiet settling ponds and vessels are needed. Settling ponds are the foremost industrial treatment for removing suspended solids. They are in use at Plants 006, 028, 119, 159, 181 and 182. Removal of suspended solids generates a solid waste effluent which must be disposed of by landfilling.

The size and number of settling ponds differ widely depending on the settling functions required. Waste streams with small suspended solids loads and fast settling characteristics can be cleared up in one or two small ponds; others with heavier suspended solids loads and/or slower settling rate may require 5 to 10 large ponds. Most settling ponds are unlined, but the technology exists for lined ponds.

Although not as widely used as settling ponds, tanks and vessels are also employed for removal of suspended solids in the phosphate manufacturing industry. They are in use at TVA (Muscle Shoals, Alabama) and at Plants 003, 006, 028 and 159.

Commercially these units are listed as clarifiers or thickeners depending on whether they are light or heavy duty. They also have internal baffles, compartments, sweeps and other directing and segregating mechanisms to provide more efficient performance. This feature plus the positive containment and control and reduced rainfall influence (smaller area compared to ponds) should lead to increasing use of vessels and tanks in the future, especially where a plant is short of available land for settling ponds.

Filtration equipment, such as plate-and-frame pressure filters, pressure or vacuum leaf filters, rotary vacuum filters, and pressure tubular filters, has been widely used in the chemical and waste treatment field for many years. The batch-type filters find most use in polishing applications, to completely remove small quantities of suspended solids, since the labor-intensive blowdown operation is dependent upon cake volume. These filtrations are common for collection of undesirable solid wastes, such as arsenic sulfide from food-grade phosphoric acid. Continuous rotary vacuum filters find general applicability in dewatering sludges with high concentrations of solids. Sand-bed filtration also finds increasingly-widespread use.

Filtration is in use at Plants 006, 075 and 119 in this industry. In general, filtration is not economically attractive for huge quantities of waste water (except for sand-bed filtration). It is usually preceded by a gravity thickening operation so that it treats the thickened sludge which is only a small volumetric percentage of the total waste water flow.

Centrifugation, in use at Plant 003 and at the TVA installation, is an alternate means for mechnical dewatering of relatively low flow rate sludges, and has made major recent inroads into the domestic waste water treatment field. The continuous solid-bowl centrifuge, as its name implies, provides for continuous removal of the cake, and its design reaches a compromise between solids recovery and cake dryness. The basket solid-bowl centrifuge, on the other hand, discharges cake intermittently, and the dewatering and cake-drying portions of the cycle may be separately controlled. Perforated-bowl centrifuges are really centrifugal filters. The solid-bowl machines offer the significant advantage over filters that blinding of a medium is removed as a problem area.

Dewatering of Lime-Precipitated Phosphates

Although (as previously discussed) lime can be used to effectively precipitate phosphates from solution to reduce the concentration to 0.3 mg/l or less (as PO_4), the lime-precipitated phosphates do not dewater readily, but form a water-trapping gel structure. After 24 hours of settling, clarified effluents still may have 15 to 50 mg/l of suspended solids. This can be significantly improved by increasing the detention time to 7 days, but the suspended solids content may still be 5 mg/l or greater. In the phosphate manufacturing industry, settling ponds with 7 days or longer detention times (equivalent to an overflow rate of 420 lpd/m^2 (10 gpd/ft^2) at a nominal depth of 3 m (10 ft) are used. It has been reported that the settling characteristics are strongly dependent upon the initial concentration of phosphate ion. An initial concentration of 75,000 mg/l resulted in a compacted settled slurry density 3 to 5 times higher than if the initial concentration was 1,500 mg/l.

Where sufficient land area for large settling ponds is not available, average removal efficiencies of 80 to 95 per cent have been obtained with mechanically raked gravity thickeners. A typical thickener design has a 2-hour detention time and an overflow rate of 42,000 lpd/m^2 (1,000 gpd/ft^2).

Synthetic organic, water-soluble, high molecular weight polyelectrolytes have achieved great success in flocculation and clarification and in sludge conditioning prior to centrifugation or filtration. A polymer dosage of 0.05 kg per kkg of dry sludge solids (0.1 lb/ton), or about 1 mg/l of a 2 per cent slurry, may achieve 85 per cent removal of

suspended solids at a detention time of 2 hours, with a 12 per cent solids content in the thickened sludge. If this thickened sludge were then vacuum-filtered, a cake of 30 per cent solids could be obtained with a solids content in the filtrate of 0.5 mg/l of less.

The following may be a typical performance chart for an influent sludge containing 100 liters of water:

	Influent	Thickener Overflow	Thickener Underflow	Filter Cake	Filtrate
Water, Liters	100	84	16	5.1	10.9
Suspended Solids, Kg	2.56	0.38	2.18	2.18	5 x 10-6
Suspended Solids Concentration	2.5%	0.45%	12%	30%	0.5

The dewatered cake, containing 85 per cent of the original solids, may be landfilled. The filtrate, when combined with the thickener overflow, would consist of 95 per cent of the original water quantity and would have a suspended solids concentration of 4,000 mg/l.

A much clearer effluent could be obtained, of course, if all of the influent waste water were directly filtered. Such is the practice at Plant 006, which achieves an average phosphate removal efficiency of 95 per cent.

Mechanical dewatering of lime-precipitated phosphates by centrifugation was attempted, but it proved unsuccessful because the highly thixotropic cake plugged the solids-removal screw.

Because an excess of lime is used in the precipitation of the phosphates, the effluent from the ponds or from mechanical thickening and dewatering would have a high pH, typically 10 to 11. This effluent could be partially carbonated (with CO_2) to reduce the pH to 8.0 to 8.5 prior to discharge, with another filtration step to remove the calcium carbonate precipitate. Alternately, it has been shown that subsequent activated sludge treatment of high-pH waste water at municipal treatment plants lower the pH due to biologically-released CO_2 from the oxidation of organic material.

Treatment Alternatives

There were two treatment alternatives considered for this subcategory. The first alternative is the treatment currently employed by 90 percent of the industry. This includes complete recycle of phossy water, evaporation of some process water, lime treatment, and sedimentation of the remaining water prior to discharge. The second alternative practiced by 10 percent of the industry involved 100 percent recycle of all process water.

TREATMENT OF WASTE WATERS IN THE PHOSPHORUS CONSUMING SUBCATEGORY

Control and Treatment of Phossy Water at Phosphorus Producing Plants

Because of harmful effects of elemental phosphorus in small concentrations in waste water, and because complete removal of the phosphorus from the water is not practical, it is univeral practice at phosphorus-producing plants to reuse the phossy water after treatment (which is required to removed other constituents in the waste water which would otherwise build up to concentration).

Barber(5) discusses several methods tried experimentally to remove elemental phosphorus from phossy water. Among these methods were chlorination, which was tried more than 20 years ago and which was discarded at that time because "accurate chlorinator control was found to be impractical". With the development of chlorine analyzer-controllers for municipal waste water treatment, however, it appears that chlorination deserves another trial. Air-oxidation was attempted, but the reaction was far from complete, leaving 14 to 37 per cent of the original colloidal phosphorus unoxidized. Filtration of the colloidal phosphorus was investigated but found impractical. As a result of these discouraging results, the industry has adopted the route of containment and reuse rather than treatment and discharge.

At the TVA Muscle Shoals plant, a commercial flocculant, at a concentration of 40 mg/l, is employed to settle both the phosphorus and the suspended solids. Using a clarifier, the system removes 92 to 93 per cent of both the phosphorus and the suspended solids as the phosphorus sludge underflow (which is only 2 per cent of the waste water volume). The presence of suspended solids is necessary for efficient removal by this method.

The underflow from the clarifier may be treated as other phosphorus muds or sludges are treated. The sludge may be gravity thickened and/or dewatered by centrifugation or filtration. The sludge, thickened sludge, or sludge cake (with respectively lower moisture contents) may then be heat-dried in an inert atmosphere using the process byproduct carbon monoxide as fuel. Elemental phosphorus (nominally 40 to 65 per cent of the "solids" in the sludge) are recovered. The remaining non-volatile solids contain no elemental phosphorus and can be safely disposed of or recycled to the feed preparation section of the phosphorus manufacturing plant.

The clarifier overflow, containing only 7 or 8 per cent of the original phosphorus and suspended solids, may then be recirculated to the phosphorus condenser sump and to other areas where water contacts phosphorus. However, because the phossy water accumulates dissolved salts (mainly fluorides and phosphates, see Table 7), about 6 per cent of the clarified water must be bled off and discharged. In addition to

suspended solids and dissolved solids, this bleed contains 120 mg/l of elemental phosphorus, equivalent to 0.4 kg/kkg, or 0.08 pound per ton, of product.

At Plant 181, a different approach is taken towards phossy water wastes. Very large lagoons not only reduce the concentration of suspended solids in the phossy water, but also serve to slowly oxidize much of the elemental phosphorus to phosphates. Subsequent lime treatment of the lagoon overflow (after combining with other waste water streams) precipitates not only the phosphates but also the fluorides in the water, thereby reducing the quantity of dissolved salts so that the water may be reused without a bleed. At this plant, the waste streams may be combined since all wastes are recycled without discharge.

A slightly different approach is taken at Plant 128. The phossy water is combined in a closed treatment and recycle system with calciner scrubber liquor. After settling of suspended solids and partial oxidation of phosphorus in a pond, lime treatment is used to precipitate dissolved phosphates and fluorides. Upon subsequent settling, the clarified (but still phossy) water is reused as calciner scrubbing water. Fresh makeup is used for the phosphorus condenser. The key to this scheme, which results in zero discharge of phossy water, is that the quantity of water vaporized in the calciner scrubber (in cooling the calciner tail gases) exceeds the quantity of phossy water in the raw waste load, so that fresh water may be continuously added to the loop without discharging any contaminated water.

Plant 159 achieves zero discharge of phossy water in a rather unique system. The completely segregated raw waste phossy water is sent to a clarifier in a manner similar to the TVA technique described above. The clarifier underflow of phosphorus sludge is treated in conventional ways, with complete return of the material to the process. The overflow from the clarifier is not recycled (as is the TVA practice, which requires a bleed discharge); but is sent to an evaporation pond.

In the approaches used by Plants 028 and 159, some or all of the phossy water is evaporated. This presents no hazard of elemental phosphorus, since it is very rapidly oxidized to phosphate as soon as the protective water is removed.

In summary, this study found three different ways that existing plants are achieving zero discharge of phossy water.

Treatment of Arsenic-Rich Residues

Arsenic-rich solid residues accumulate from the purification of phosphoric acid and of phosphorus pentasulfide. The common disposal method is burial in a controlled area, as practiced at Plants 075, 119, 147 and 192.

The arsenic-rich liquid residue from the PCl_3 distillation is more difficult to dispose of. At Plant 037, this residue is first treated with trichloroethylene, in which PCl_3 is miscible but $AsCl_3$ is not. The trichloroethylene is then water-washed to remove the arsenic-free PCl_3 and the trichloroethylene is reused. The $AsCl_3$-rich residue is then segregated and stored in drums for final disposal in an environmentally safe manner.

Treatment of Phosphoric Acid Wastes

The standard treatment of these wastes is by neutralization and/ or precipitation with lime as discussed for the phosphorus production subcategory. the final product of neutralization in an excess of lime and in a considerable excess of water, is formed:

$$6\ H_3PO_4 + 10\ Ca(OH)_2 \rightarrow 9\ CaO.3\ P_2O_5.Ca(OH)_2 + 18\ H_2O$$

Although this material is very insoluble, the reaction does not proceed to completion in practice unless a Ca/P mole ratio of at least 1.9 is reached. Moreover, the reactivity of the lime in precipitating the dissolved phosphate is strongly dependent upon the lime source and the slaking conditions. It has been found that freshly-slaked pebble quicklime can precipitate in excess of 97 per cent of the phosphate, whereas commercial hydrated lime (calcium hydroxide) or freshly-slaked ground quicklime only succeeded in a 73 to 80 per cent precipitation efficiency under the same conditions.

A large body of literature has been developed in the lime treatment of domestic waste waters for phosphate removal. The study performed by Black & Veatch for EPA(31) summarizes the efforts that have been sufficiently demonstrated to be applied to current municipal waste water treatment projects. It is pointed out that the average concentration in domestic raw waste water is about 10 mg/l (expressed as elemental phosphorus). The domestic sources are about 1.6 kg (3.5 lbs) per capita per year, one-third of which are from human excretions and two-thirds from synthetic detergents.

The existing practice achieves better than 90 per cent removal of the phosphates from domestic waste water, reducing the concentration (expressed as PO_4) from 30 mg/l to as low as 0.3 mg/l. At first glance, this seems to conflict with the fact that tricalcium phosphate (or hydroxylapatite) has a solubility of 25 mg/l (equivalent to 15 mg/l as PO_4). However, in a large excess of lime, the pH is sufficiently high (10 to 11) to reduce the solubility of this salt of a strong base and weak acid. The equilibrium -

$$Ca^{+}{}_3(PO_4)_2(s) \longrightarrow 3Ca^{+2} + PO_4^{-3} \xrightarrow{2H_2O} 3Ca^{+2} + 2OH^{-} + 2HPO_4^{-2}$$

is driven to the far left (reducing phosphate solubility) by the addition of excess lime. The solubility of tricalcium phosphate may be theoretically calculated as a function of pH (or of Ca:P ratio) using the ionization constants for H_3PO_4, $H_2PO_4^1$, and HPO_4^2 in conjunction with a solubility product for tricalcium phosphate (which may be calculated from solubility data in pure water).

This phenomenon, substantiated by full-scale operating data as reported by Black & Veatch(31), is summarized below:

pH	Phosphate Concentration of Filtered Effluent, mg/l
9.0	5.7
9.5	1.4
10.0	0.6
10.5	0.3
11.0	0.2

The literature is replete with details of technology to achieve high removal efficiencies.(31-42) For example, thickened sludge recirculation to the neutralization tank has been found to seed the precipitation of calcium phosphate, resulting not only in better removal of dissolved phosphates but also in the growth of larger crystals for easier dewatering.

Although lime treatment of phosphates has been the predominant route, ferric chloride and alum have also been extensively used. Ferric salts are most effective in the 4 to 5 pH range and aluminum salts are most effective in the 5 to 6 pH range, as opposed to the 10 to 11 range for lime. The mole ratio of Fe/P or Al/P should be around 2.0, the same as the Ca/P ratio with lime treatment.

The use of lanthanum salts has recently been demonstrated to more effectively precipitate phosphates over a much wider pH range than calcium, ferric, or aluminum. The drawback is cost; the treatment system must recover and reuse the lanthanum.

Another process for phosphate removal is adsorption by activated alumina with subsequent stripping with caustic acid then regeneration of phosphate-free caustic by lime precipitation. Ion exchange has also been investigated.

One interesting process for phosphate removal is borrowed from a commercial process for HCl acidulation of phosphate rock. Phosphoric acid is recovered by solvent extraction, using C_4 and C_5 primary alcohols such as n-butanol and isoamyl alcohol. The chloride-free phosphoric acid is then extracted from the organic phase by water

washing, the solvent is recycled, and the pure phosphoric acid may be concentrated by evaporation of water. This treatment method appears attractive for application to the food-grade calcium phosphate waste streams. The suspended solids may be dissolved by HCl addition, and solvent extraction may be used to regenerate phosphoric acid for return to the process.

Treatment of Acidic Sulfite, Sulfate, and Phosphate Wastes

These acids are components of the waste streams from the phosphorus-consuming subcategory of the industry; and sulfuric acid is also a constituent of the wastes from the phosphorus-production segment. The sulfurous and phosphorus acids may be partially oxidized prior to treatment to sulfuric and phosphoric acids.

The neutralization and precipitation of the slightly soluble calcium salts is exactly comparable to the treatment of acidic phosphate and fluoride wastes. The solubilities of calcium sulfite and of calcium phosphite are repressed by excess lime as in the previously-discussed cases, but the solubility of calcium sulfate (a salt of a strong base and a strong acid) is not affected by pH.

Removal of Chlorides

Ion Exchange and Demineralization

Ion exchange and demineralizations are usually restricted in both practice and costs to total dissolved solids levels of 1000 to 4000 mg/l or less.

An ion exchange may be simply defined as an insoluble solid electrolyte which undergoes exchange reactions with the ions in solution. An exchanger is composed of three components: an inert matrix, a polar group carrying a charge and an exchangeable ion carrying an opposite charge. The inert matrix is usually cross-linked polymeric resin containing the needed polar groups.

There are two types of ion exchangers: cation and anion. Cation exchangers contain a group such as sulfonic or carboxylic acid. These can react with salts to give products such as the following:

$$RSO_3H + NaCl \rightleftharpoons RSO_3Na + HCl$$
$$RCO_2H + NaCl \rightleftharpoons RCO_2Na + HCl$$

The above reactions are reversible and can be regenerated with acid.

Anion exchangers use basic group such as the amino family.

$$RNa_3OH + NaCl \rightleftharpoons RNa_3Cl + NaOH$$

This is also a reversible reaction and can be regenerated with alkalies. The combination of water treatment with both cation and anion exchangers removes the dissolved solids and is known as demineralization (or deionization). The quality of demineralized water is excellent. Table 16 gives the level of total dissolved solids that is achieved. Special ion exchange systems have been developed for treating high dissolved solids content (more than 1000 mg/liter total dissolved solids), minimizing regenerant chemicals costs.

Reverse Osmosis

The phenomenon of osmosis has its explanation in thermodynamic equilibrium and free energy concepts. Essentially, when a semipermeable membrane separates a pure liquid and solution of dissolved material in the same liquid there is a net migration of the pure liquid to the solution, driven by the free energy difference between the two sides of the membrane. Equilibrium is reached only when the liquids on each side of the membrane are of the same composition or sufficient additional pressure is applied on the solution side of the membrane to counterbalance the osmotic driving force. Application of additional pressure on the solution side reverses the direction of osmotic flow through the membrane and results in concentration of the solution and migration of additional pure liquid to the pure liquid side. This is reverse osmosis. It may be looked at as pressure filtration through a molecular pore-sized filter.

The small pore size of the reverse osmosis membrane is both its strength and its weakness. Its strength comes from the molecular separations that it can achieve. Its weakness comes from the criticalness it has to blinding, plugging, and chemical attack. Acidity, suspended solids, precipitations, coatings, dirt, organics and other substances can make it inoperative. Membrane life is critical and unknown in many mediums.

TABLE 16 Water Quality Produced by Various Ion Exchange Systems

Exchanger Setup	Residual Silica, mg/l	Residual Electrolytes, mg/l	Specific Resistance ohm-cm @ 25 C
Strong acid cation + weak-base anion	No silica removal	3	500,000
Strong-acid cation + weak-base anion + strong-base anion	0.01-0.1	3	100,000
Strong-acid cation + weak-base anion + strong-acid cation + strong-base anion	0.01-0.1	0.15-1.5	1,000,000
Mixed bed (strong-acid cation + strong-base anion)	0.01-0.1	0.5	1-2,000,000
Mixed bed + first or second setup above	0.05	0.1	3-12,000,000
Similar setup as immediately above + continuous re-circulation	0.01	0.5	18,000,000

With these restrictions there is little wonder that its industrial applications are few. Fortunately, the phosphorus chemicals industry water purification needs are similar to those of the areas where reverse osmosis has been shown to be applicable -- treatment of brackish water and low (500 mg/l to 20,000 mg/l) dissolved solids removal. Organics are usually absent, suspended solids are low and can be made low rather easily, acidity is easily adjusted, and the dissolved solids are similar to those in brackish water -- sodium chlorides, sulfates and their calcium counterparts.

Evaporation Ponds

Plant 159 utilizes an evaporation pond for disposal of phossy water from phosphorus manufacturing. They may also be reasonably used for other waste water disposal where the waste water quantities are not overwhelming.

The size of an evaporation pond depends upon the climatic differential between evaporation and rainfall:

Evaporation-Rainfall Differential	Pond Area
0.6 m/yr (2 ft/yr)	0.060 ha/cu m/day (560 acres/MGD)
1.2 m/yr (4 ft/yr)	0.030 ha/cu m/day (280 acres/MGD)
1.8 m/yr (6 ft/yr)	0.020 ha/cu m/day (190 acres/MGD)

Evaporation ponds may be either unlined or lined, and should be diked. Use is often made of natural pits, valleys or ponds.

Conventional evaporation ponds are not, of course, among the useful treatments in areas where the rainfall exceeds the evaporation. However, surface aerators (commonly used for aerated lagoons in secondary treatment of organic wastes) can significantly increase the evaporation from a pond by increasing the water/air surface area.

Single-Effect and Multiple-Effect Evaporators

For the treatment of small waste streams, single-effect evaporators are characterized by low equipment costs and by inherent reliability, at the expense of high steam requirements. Conventional multiple-effect evaporators, with 2 to 6 effects, have somewhat higher capital costs, but require much less steam.

Evaporation is a technology, of course, that is aptly demonstrated throughout the chemicals process industry (although not extensively for

the sole purpose of waste treatment), and as such meets the requirements of being currently available.

Refrigerated Condensers for PCl_3 and $POCl_3$

In the standard processes for manufacturing PCl_3 and $POCl_3$, the present industry practice is to use water-cooled condensers to reflux the reaction vapors and to collect the product. Because the vapor pressure of PCl_3 is significantly high (boiling point 76°C (169°F)) at normal condensing temperatures, the raw waste load in the tail-gas water scrubbers contain rather large quantities of the hydrolysis products of PCl_3. The use of refrigerated condensers in place of the water-cooled condensers; or alternately, the use of cold traps downstream of the water-cooled condensers; would drastically reduce the amount of PCl_3 in the tail gas which subsequently becomes acid aqueous wastes:

Temperature, °C	Temperature, °F	PCl_3 Vapor Pressure, mm Hg (27)
-40	-40	3
-20	- 4	13
0	32	38
+20	68	99
+40	104	235

It is apparent that a condensing temperature below -20°C (-4°F) would lower the PCl_3 vapor pressure by an order of magnitude over normal condensing temperatures, and would virtually double the temperature driving force for heat transfer.

Refrigerated condensers are in current use (for $POCl_3$ manufacture using air oxidation) at Plant 037.

Inert-Atmosphere Casting of P_2S_5

The present industry practice is to cast molten P_2S_5 product into shipping containers or into conical forms. When molten P_2S_5 is exposed to the atmosphere, it spontaneously ignites, forming P_2O_5 and SO_2 which are subsequently water-scrubbed.

There are various state-of-the-art techniques available for casting either in an inert atmosphere or in vacuum, to eliminate this source of raw aqueous waste.

Treatment Alternatives

The treatment alternatives considered for the manufacture of phosphoric acid are first no addition treatment (the only discharges are from leaks and spills) and no discharge of any process waste water pollutants to

navigable waters. The latter alternative involves tightened housekeeping and maintenance construction of dikes and dams around pumps, valves, and tanks; construction of sumps and sump pumps; lime treatment of leaks and spills; and landfill of the sludge. This is currently practiced by 10 percent of the industry.

There were two treatment alternatives considered for the manufacture of phosphorus pentoxide: no additional treatment and no process waste water discharge.

Three treatment alternatives were considered for the manufacture of phosphorus pentasulfide. The first involves no additional treatment. The second includes reduction of the volume of waste water discharge by the recycle of scrubber water. The third alternative includes no waste water discharge, lime treatment, settling tanks, recycle of tank overflow back to the process, and landfill of sludge.

Several treatment alternatives were considered for the manufacture of phosphorus trichloride and phosphorus oxychloride. The first alternative is no treatment. The second involves reduction of waste water volume by recycle of scrubber water. The third alternative includes lime treatment, settling tanks, and landfilling of sludge. The fourth alternative involves no discharge of process waste water pollutants to navigable waters.

TREATMENT OF WASTE WATERS IN THE PHOSPHATE SUBCATEGORY

Treatment of Specific Wastes

Sodium Tripolyphosphate Manufacture

As stated in Section V, three notable plants (006, 042 and 119) achieve no discharge of porcess waste waters. Airborne solids collected in dust collectors from the spray dryer gaseous effluent stream are added to the product. Scrubber water is used to form a slurry with caustic in the initial process neutralization step.

The manufacture of sodium tripolyphosphate is therefore a water consuming process, requiring no waste water treatment.

Calcium Phosphates Manufacture

The amount of airborne solid wastes removed by wet scrubbers can be minimized by preceding wet scrubbers with dry dust collection equipment. Treatment of phosphoric acid, suspended solids and sludges resulting from wet scrubbing has been previously described for the phosphorus production subcategory.

Wet phosphoric acid is frequently used for animal feed grade phosphates. Fluosilicic, hydrofluoric and silicic acid wastes will subsequently result from acid defluorination. Treatment of these parameters has also been discussed previously for the phosphorus production subcategory.

Treatment Alternatives

The only treatment alternative considered for the manufacture of sodium tripolyphosphate is no discharge of process waste water pollutants. This is essentially accomplished by all of this industry through dry dust collection and return of scrubber water to the system.

Two treatment alternatives were considered for the manufacture of feed grade dicalcium phosphate. The first, employed by at least 50 percent of the industry, involves in-process controls for phosphate and lime dusts and phosphoric acid mists. The second alternative inlcudes the above plus lime treatment settling, and recycle of clarified water to the acid scrubbers and landfill of the sludge.

Three treatment alternatives were considered for the manufacture food grade dicalcium phosphate. No treatment is the first alternative. In the second alternative baghouses replace wet scrubbers with product recovery. Approximately 30 percent of the industry is practicing this technology. In the third alternative waste water is treated with lime, filtered, and recycled in the process. The filter cake is landfilled.

Approximately 10 percent of the industry is achieving no discharge of process water pollutants by this technology.

SECTION VIII
COSTS, ENERGY AND NON-WATER QUALITY ASPECTS

INTRODUCTION

The control and treatment technologies applicable to the raw wastes of the phosphate manufacturing industry were discussed in Section VII of this report. In this Section, each of these technologies is reviewed from the following standpoints:

* The cost of applying the technology.
* The energy demands of the technology.
* The impact of the technology upon air quality, solid waste management, noise and radiation.
* The recovery and subsequent use of process materials from raw waste streams, as a result of applying the technology.

A representative hypothetical plant for each chemical produced in the industry is synthesized. Cost-effectiveness data for the plant for the various treatment alternatives (see table 17) appear as table 18. The cost is in terms of both investment cost and equivalent annual cost, and the effectiveness in terms of pollutant quantities is compared to the raw waste load. The discussion of costs and benefits in this Section, however, is formulated to be more generally useful in evaluating the economics for any particular plant within the industry. Costs for a specific plant may be significantly influenced by the following factors which cannot all be incorporated into a single hypothetical plant:

The degree of freedom, which personnel of each plant must retain, to choose among the alternative control and treatment technologies presented in Section VII, to choose from technologies not presented in this report, and to choose any combination or permutation of these technologies.

The cost tradeoffs, which are unique for each plant, between in-process controls and end-of-process treatments; with material recovery being an important parameter.

The real raw waste load for each plant, which may be appreciably different (in either direction) from the standard raw waste loads as presented in Section V. In particular, much greater plant-to-plant variability was observed with respect to production-normalized raw waste water quantities than with respect to production-ion-normalized raw quantities of polluting constituents.

TABLE 17

TREATMENT ALTERNATIVES

Subcategory	Chemical	Alternative	Description
Phosphorus Producing	P_4 (Fe_2P)	A	Existing control complete recycle of phossy water. Evaporation of some other process water. Lime treatment and sedimentation of remaining process water prior to discharge.
		B	Piping, pumping, and controls for 100% recycle of process wastewaters.
Phosphorus Consuming	H_3PO_4	A	No treatment. (Only wastewaters orginate from leaks, spills, etc.)
		B	Tighten housekeeping and maintenance. Dike and dam around pumps, valves,, tanks, etc. Provide sumps and sump pumps. Treat with lime and landfill the sludge.
	P_2O_5	A	No treatment.
		B	Lime treatment, settling tank, recycle of tank overflow back to process, and landfill sludge.
	P_2S_5	A	No treatment.
		B	Recycle scrubber water.
		C	Lime treatment, settling tank, recycle tank overflow back to process, landfill sludge + B.
	PCl_3	A	No treatment.
		B	Recycle scrubber water.
		C	Lime treatment, settling tank and landfill sludge + B.
		D	Evaporation + B + C.
	$POCl_3$	A	No treatment.
		B	Recycle scrubber water.
		C	Lime treatment, settling tank, and landfill sludge + B.
		D	Evaporation + B + C.
Phosphate Producing	$Na_5P_3O_{10}$	A	Dry dust collection already in existance at exemplary plant. May be economically justified on the basis of product recovery.
	$CaHPO_4$	A	In-process controls for phosphate and lime dusts and for phosphoric acid mists, including dry dust collection and scrubber water recycle to process.
		B	Lime treatment, settling pond, recycle of clarified water to acid scrubbers, and landfill sludge. + A.
	$CaHPO_4$ Feed grade	A	Replace wet scrubbers with baghouses.
		B	Lime treatment, filtration of slurry, recycle of filtrate, and landfill of filter cake + A.

TABLE 18

TREATMENT ALTERNATIVES
COST - EFFLUENT QUALITY COMPARISON

Chemical	Treatment Alternative	% Industry Using Alternative	Investment $1,000	Annual Operating Costs $1,000	Cost Per Units $/Kkg	Wastewater l/Kkg	TSS Kg/Kkg	TDS Kg/Kkg	Acidity Kg/Kkg	F Kg/Kkg	SO_4 Kg/Kkg	PO4 Kg/KKg	H_3PO_4 & H_3PO_3 Kg/Kkg	H_3PO_4 Kg/Kkg	H_2SO_3 Kg/Kkg	HCl Kg/kkg	HF, H_2SiF_6 H_2SiO_3 Kg/Kkg	pH
P	Subcategory																	
P_4	Raw Waste	-	-	-	-	426,000	42	-	54	54	111	25						
	A	90	-	-	-	104,000	0.5	4	1.5	0.1	2	0.2						
	B	10	500	228.2	5.07	0	0	0	0	0	0	0						
P	Consuming Subcategory																	
H_3PO_4	Raw Waste (A)	90	-	-	-	8												
	B	10	95	42.9	0.67	0												
P_2O_5	Raw Waste (A)	100	-	-	-	500							0.2					
	B	0	20	9.1	1.54	0							0					
P_2S_5	Raw Waste (A)	100	-	-	-	30,000							0.5	1				
	B	0	12.5	5.6	0.44	3,000							0.5	1				
	C	0	49.5	22.8	1.87	0							0	0				
PCl_3	Raw Waste (A)	100	-	-	-	5,000	-	-					2.5			3		2
	B	0	4.2	1.8	.17	500	-	-					2.5			3		1.5
	C	0	16.5	8.8	.77	420	0.7	5					0			0		6-10.5
	D	0	20.5	18.3	1.54	0	0	0					0			0		-
$POCl_3$	Raw Waste (A)	100	-	-	-	2,500	-	-					0.5			2		2
	B	0	2.2	1.0	.16	250	-	-					0.5			2		1.5
	C	0	14.2	6.9	.94	210	0.2	3.5					0			0		6-1-.5
	D	0	15.9	10.1	1.38	0	0	0					0			0		-
P	Subcategory																	
$Na_5P_3O_{10}$	Raw Waste	-	-	-	-	0												
	A	100	*	*	*	0												
$CaHPO_4$	Raw Waste	-	-	-	-	6,700	22					4					12	
(Feed Grade)	A	50	*	*	*	6,300	22										12	
	B	50	186	91.6	1.54	0	0										0	
$CaHPO_4$	Raw Waste	60	-	-	-	4,200	100								30			
(Food Grade)	A	30	*	*	*	2,100	50								15			
	B	10	33	97.2	1.65	0	0								0			

* Use of dry dust collection and product recovery will cover cost of this alternative, hence, no costs were listed.

There is a wide variation in the existing application of of effluent control technology. (i.e.some plants have more equipment to install than others in order to meet the effluent limitations guidelines).
In addition physical characteristics of each particular plant will affect treatment costs such as:

* Plant age, size, and degree of automation.

* Plant layout (i.e., can in-process controls be physically installed between existing units?).

* Plant distances and topography (i.e., what are the installation and operating costs of recycle technologies?).

* Climatic factors (temperature and evaporation/ rainfall).

* Esthetic factors (i.e., is a settling pond locally acceptable?).

* Land availability (primarily a factor in applying settling pond and evaporation pond technologies).

The degree to which a plant is integrated with other production departments would significantly affect the cost of applying control and treatment technologies. Can waste materials from one department be used in an adjoining department (i.e., mutual neutralization of acid and alkaline wastes)? Can common treatment facilities be built (tradeoff between economies of scale vs. reversing the principle of segregation of wastes)? Are the waste water sewers from adjoining departments readily separable?
The feasibility and attractiveness of joint municipal/ industrial waste water treatment, which is a highly local evaluation to be made. Increasingly more examples of such dual treatment are being reported.

The local solid waste management situation. The sludges from applying waste water treatment technologies may be landfilled at highly different costs, depending upon the local availability of disposal sites and the distances involved.

In appreciation of all of the above factors, the discussion of costs in this Section is formulated to be generally useful in evaluating the economics for any particular plant within the industry.

Definition of Representative Plants

The sizes of the representative plants were chosen so that their capacities were approximately the averages of the data presented in Table 2. Although in many cases (especially in the phosphorus-consuming segment of the industry) more than one product is made at a given location, each product was addressed separately in this supplement. Cost savings due to combined treatment facilities are a distinct probability; the effect in practice would be to achieve the benefits at costs lower than those presented in this analysis.

The particular assumptions in choosing representative plants were:

1. Phosphorus Manufacture--The representative plant has already no discharge of phossy water (as much of the industry has). It has, in addition, achieved a level of effluent reduction commeasurate with that of plant 028 (see Tables 13 and 14, but still discharges 25,000 gallons of treated process water per ton into a receiving stream. Technology "A" of Table 17, therefore, represents effluent reduction, with respect to the raw waste load, already achieved by the representative plant, with no additional costs required. The effluent from technology "A" is suitable for process reuse, and technology "B" is the implementation of this recycle. For the representative plant, it was assumed that the return water system traversed 1,000 yards back to the head end of the plant and had a difference in elevation of 60 feet to make up. It was also assumed that the representative plant had no severe freezing problems.

2. Phosphoric Acid Manufacture--The representative plant had no process water discharge (including phossy water), but had not yet performed a systematic and thorough program for minimizing, collecting, and treating minor phosphoric acid leaks and spills.

3. Manufacture of P_2O_5, P_2S_5, PCl_3, and $POCl_3$--The representative plants for these chemicals had not yet instituted any control or treatment of acid waste waters, but have already achieved zero discharge of phossy water. As a conservative approach for PCl_3 and $POCl_3$ manufacture, it was assumed that solar evaporation for technology "C" in Table 17 was not feasible for climatic reasons so that mechanical evaporators were necessary. It was also assumed that refrigerated condensers proved less economical than larger evaporators.

The representative plants for P_2O_5, P_2S_5, PCl_3, and $POCl_3$ are assumed not to have sufficient land for settling ponds, so that mechanically-raked clarifiers are used.

4. Sodium Tripolyphosphate Manufacture--The representative plant has either of two situations: (a) Dry dust collection with return of solids to the process, plus return of wet scrubber liquors to the process, has already been installed resulting in zero discharge of process waste waters. (b) The above controls have not been installed, but can be economically justified on the basis of product recovery.

For either of these two situations (which cover much of the industry), no additional costs (attributable to effluent reduction benefits) are required.

5. Feed-Grade Dicalcium Phosphate Manufacture--For control of phosphate and lime dusts and phosphoric acid mists, the representative plant has no additional required costs (attributable to effluent reduction benefits), for the same reasons as listed above for sodium tripolyphosphate manufacture.

However, it is assumed that the representative plant uses wet-process phosphoric acid and that it performs defluorination of all acid used (in practice, a good fraction of received acid may already be defluorinated). It is further assumed that the representative plants have sufficient land area for on-site settling ponds.

6. Food-Grade Calcium Phosphate Manufacture--The representative plant is assumed to have wet scrubbers for dust-laden vent streams. Technology "A" of Table 17 is the replacement of wet scrubbers with baghouses, but that the cost is justified by product recovery. It is assumed that at this representative plant the elimination of wet scrubbers reduces the waste load by 50 percent.

Current Selling Prices

Table 3 shows the current list prices of the chemicals within this industry. These data are useful as a yardstick for measuring the economic impact of achieving pollution control.

Capital Cost Basis

For these analyses, the capital investment costs have been adjusted to 1971 dollars using the Chemical Engineering Plant Cost Index (1957-59 = 100; 1971 = 132.2). The capital recovery segment of the annual costs are based upon a 5-year amortization schedule, consistent with IRS regulations concerning pollution-abatement equipment and facilities; and upon an 8 percent interest rate. The resulting annual capital recovery factor (principal and interest) is 0.25046.

"Taxes and Insurance" annual cost is estimated at 5 percent of the investment cost. "Operating and Maintenance" annual cost includes labor, supervision, lab support, etc., and is estimated at 15 percent of

the investment cost, exclusive of chemicals, energy and power costs (which are calculated directly for each appropriate case). Chemical costs are included in "Operating and Maintenance", but power is listed separately. The cost of lime for neutralization has been assumed at $20 per ton, and the cost of steam for evaporation has been assumed as $0.70 per thousand pounds (or $0.70 per million BTU).

In-Process Controls

The cost of these controls are perhaps the most difficult to generalize, since they are almost wholly dependent upon the existing equipment configuration in any particular plant.

Segregation of Waste Streams

First, a plant must be surveyed to pinpoint the sources of both process water and non-contact cooling water. At one plant, there were a great many points where process water entered a common sewer, but there were relatively few cooling water sources. It was much more economical to divert the cooling water to a new and separate collection system than to adopt the reverse strategy. The project costs for such a retrofit would be highly labor-intensive, especially since the construction must proceed without unduly disrupting production schedules. Other than capital recovery and associated annual costs, the annual costs would consist of a small maintenance cost and no costs for operating labor, materials or power.

There would be no effect of this project on energy demands, since plant sewers are normally gravity-flow. There would be no adverse non-water quality impacts of this project.

Recycle of Scrubber Water

The capital costs would be to provide a surge tank, a recycle pump, and associated piping. The surge tank need not be large; a 15-minute residence time should suffice. The power costs and energy use of the pump would not greatly exceed the corresponding values presently utilized to provide fresh scrubber water at comparable flow rates; in any event they are small since scrubber flow rates are small.

Dry Dust Collection

Based upon data furnished by the personnel of Plant 007, the capital cost of high-temperature baghouses for this 91 kkg/day (100 tons/day) plant was $350,000. The annual operating and maintenance costs, other than capital recovery, taxes and insurance, is estimated at 6 per cent of the capital cost. A credit to the annual cost is the value of recovered material; the quantity might be estimated as 2 to 5 per cent of the production rate, since baghouses recover virtually all dusts.

The power requirements for the fans and shakers are small, and are usually comparable to the pump power requirements for the liquid scrubbing systems they replace. Since the recovered dusts are almost always utilized in the process, there is no adverse impact upon solid waste management.

Refrigerated Condensers

The condensers are standard items, and in practice the existing condensers may be used. The refrigeration supply is standard equipment, and rather expensive in terms of capital costs. An added cost would be the insulation of existing coolant line and of the condenser. The power requirement for the refrigeration compressor could be moderately high. There would be not impact upon non-water quality aspects.

Inert-Atmosphere Casting for P_2S_5

This is a relatively expensive control technique, requiring major revisions not only of the casting equipment but also of the basic casting procedures. There would be some small power requirement either for inert-gas blowers or for vacuum pumps. The annual cost of the inert gas (assuming it is not recycled) must be estimated.

Housekeeping and Containment

Like the previously-discussed project of water segregation, housekeeping and containment capital costs are labor-intensive and depend to a very large extent upon the existing plant configuration. A point of reference might be taken from the experience of one 360 kkg/day (400 tons/day) plant which expended $160,000 for isolation and containment (trenches, sewers, pipelines, sumps, catch basins, tanks, pumps, dikes and curbs). The need to attend to many small sources of leaks and spills reduces the economies of scale. The power requirements are minimal, limited to small sump pumps. No adverse non-water quality impacts arise from this control technique.

TREATMENT OF SPECIFIC WASTE CONSTITUENTS

Neutralization of Acidic Waste waters and Precipitation of Calcium Salts

A general cost factor for neutralization is 1.3 to 5.3 cents per cu m (5 to 20 cents/1,000 gallons). However, the cost for lime is directly dependent not upon the waste water quantity but upon the total acidity. The data of Table 8, with a lime cost of $22/kkg ($20/ton), can be used to calculate this cost.

Neutralization tanks are usually small, with residence time varying from 30 seconds to 30 minutes. The installed cost of these tanks may be approximated by:

$$\text{Capital Cost} = \$15{,}000 \left(\frac{GPD}{10{,}000}\right)^{0.2}$$

(Note: l/day = 3.785 x GPD)

The power requirements for mixing are rather nominal. Assuming subsequent sedimentation or other dewatering operations, the neutralization step alone does not have any adverse non-water quality impacts.

Treatment of Arsenic-Rich Residues

The cost of this solvent is rather nominal because the quantities of waste involved are only a very small fraction of the production volume, and because the solvent (trichloroethylene) is reused; despite the high unit costs which is more than 10 cents/cu m (40 cents/1,000 gal). There is virtually no power requirement. There is,however, a very substantial impact upon solid waste management, since the residues are extremely objectionable and must be disposed of in special ways. The quantity involved is 0.05 kg of $AsCl_3$ per kkg of product PCl_3 (0.1 lb/ton).

Control and Treatment of Phossy Water

Control and treatment of phossy water is a universal practice at phosphorus-producing plants. Although several different methods were observed, every plant prevents the discharge of virtually all elemental phosphorus. This technology is therefore so universally applied that costs need not be estimated -the price has already been paid. Similarly, a discussion of energy and of non-water quality aspects would be academic.

Removal of Suspended Solids

Settling Ponds

Using a detention time of 7 days and a depth of 3 m (10 ft), the calculated overflow rate is 0.42 cu m/day/m2 (10 gpd/ft2). This is equivalent to 4,200 cu m/day/hectare (435,600 gpd/acre).

The capital costs for small unlined ponds, with areas from 0.4 to 2 hectares (1 to 5 acres) can be estimated as:

$$\text{Capital Cost} = \$50{,}000 \times \text{Acres} - \$8{,}000 \times (\text{Acres})^2$$

(Note: Hectares = 0.405 x Acres)

Because diking is a large portion of pond costs, and because the dike length increases much more slowly than pond area, larger ponds are considerably cheaper per unit area. For large unlined ponds of 40 to 1,000 hectares (100 to 2,400 acres), the capital cost is $2,500 to $12,500 per hectare ($1,000 to $5,000 per acre).

For lined ponds, the additional installed capital cost for a 30-mil PVC liner is $21,500 per hectare ($8,700 per acre). By using the above overflow rate and the above pond costs per unit area, a pond cost based on waste water flow may be calculated.

Settling ponds utilize no energy. The solids do, however, collect on the bottom and must either be periodically removed (creating a solid waste disposal problem); or the filled pond may be abandoned and replaced with a new one (creating a land use problem).

Mechanically-Raked Clarifiers and Thickeners

A general cost for gravity thickening is 0 to 2.6 cents per cubic meter (0 to 5 cents per 1,000 gallons).

The installed cost of mechanically-raked clarifiers and thickeners with capacities of 38 to 38,000 cu m/day (0.01 to 10 MGD) can be estimated as

$$\text{Capital Cost} = \$95{,}000\ (\text{MGD})^{0.4}$$

(Note: Cu m/day = 3,785 x MGD)

Where polymeric flocculants are used, the additional cost amounts to $4 per kg of flocculant ($1.80/lb). The dosage rate is nominally 0.05 kg/kkg of dry sludge solids (0.1 lb/ton).

The power requirements are nominal, since the rake has a very long period of revolution. Additional nominal power requirements arise from sludge pumping and clarifier overflow pumping.

This treatment has (by definition) a solid waste impact, since its function is the removal of suspended solids. The sludge from thickeners may be 85 to 92 per cent moisture. If the quantities are small, this sludge may be directly transported to landfills. Alternately, it may be dewatered on sand drying beds or mechanically (filters or centrifuges) to 60-70 per cent moisture before landfilling. The quantity to be landfilled is therefore a very strong function of the degree of dewatering after thickening.

Vacuum Filtration and Centrifugation

The costs of these two mechanical dewatering techniques are competitive. A general cost for either is 0 to 2.6 cents per cubic meter (0 to 5 cents per 1,000 gallons).

The installed capital costs for either vacuum filters or centrifuges are as follows:

Capacity, MGD	cu m/Day	Installed Cost
0.01	38	$25,000
0.1	378	25,000
1	3785	200,000
10	37850	750,000

Polymeric flocculants are often used to condition the sludge prior to dewatering. These costs were discussed in the previous paragraph.

The power requirements for vacuum filtration are moderate; they include the sludge pump, the flocculant pump, the rotating conditioning tank, the vacuum filter drum drive, the sludge agitator below the filter drum, the vacuum pump, the filtrate pump and the cake conveyor belt. Centrifuges have much larger power requirements, since the sludge must be accelerated to hundreds or several thousands of G's. At high speeds, the windage losses (air friction) of centrifuges are considerable. Large centrifuges may require 40 to 75 Kw (50 to 100 HP) of power. Auxiliary power is also required for sludge pumping, flocculant pumping, centrate pumping, the cake scraper, and the cake conveyor belt.

Vacuum filters and centrifuges have a beneficial impact upon solid waste management. Rather than landfilling 12 per cent sludge, these devices drastically reduce the solid waste quantity by producing a 30 to 40 per cent cake.

Centrifuges have a moderately adverse impact with regard to noise pollution, since they run with a characteristic high speed whine that is annoying to the human ear. Vacuum filtration is also a noise contributor since vacuum pumps are noisy machines.

Landfilling of Solid Wastes

The disposal costs for solid wastes are highly dependent upon the hauling distance. The landfill operations alone may cost $6 or more per kkg (or per ton) for small operations and $2 to 4 per kkg (or per ton) for larger operations.

Several pertinent papers have recently been published on the subject of solid waste management in the chemical industry.(63,64)

Solid waste hauling and the material handling operations at landfills are energy-consuming operations. Landfilling of containerized soluble solids in plastic drums or sealed envelopes is practicable but expensive. Blow-molded plastic drums, made from scrap plastic (which is one of the present major problems in solid waste disposal) could be produced for $11-22/kkg ($1020/ton) capacity at 227 kg (500 pounds) solids/drum and a rough estimate of $2.50-$5.00 cost/drum. A more economical method, particularly for large volumes, would be sealed plastic envelopes, 750 microns (30 mils) thick.

At $1.10/kg (50¢/lb) of film, low density polyethylene costs about 10¢ per 0.0929 square meter (1 square foot). Using the film as trench liner in a 1.8 meters (6-foot) deep trench, 1.8 meters (6-foot) wide, the perimeter (allowing for overlap) would be approximately 7.5 meters (25 feet). At a density of 1.6 grams/cc (100 pounds/cubic foot) for the solid, costs of plastic sheet per metric ton would be $2.00 ($1.75/ton). With sealing, the plastic envelope cost would be approximately $2.20/kkg ($2/ton). With landfill costs of $2.20/kkg ($2/ton) additional, the total landfill disposal costs would be about $4.40/kkg ($4/ton).

The above figures for solubles disposal using plastic containers, bags or envelopes are only rough estimates. Also, the technology would not be suitable for harmful solids or in situations where leaching contamination is critical.

Removal of Chlorides

Demineralization and Reverse Osmosis

These treatments are costly, over 10 cents per cubic meter (40 cents per 1,000 gallons).

The installed capital costs can be calculated from:

a. Demineralization, Cap. Cost = $280,000 (MGD) 0.75

b. Reverse Osmosis, Cap. Cost = $480,000 (MGD) 0.75

Hence, the capital costs for reverse osmosis are nearly double those for demineralization.

The operating costs (not including capital recovery costs) are:

a. Demineralization, 20 cents/1,000 gal @ 1,000 mg/l TDS
40 cents/1,000 gal @ 2,000 mg/l TDS
b. Reverse Osmosis, 38 cents/1,000 gal @ 0.01 MGD
20 cents/1,000 gal @ 0.1 MGD
14 cents/1,000 gal @ 1 MGD

Neither demineralization nor reverse osmosis require a great deal of power, and neither has significant non-water quality impact.

Solar Evaporation Ponds

The installed costs of solar evaporation ponds (on the basis of pond area) are essentially the same as the costs for settling ponds presented earlier. The pond area depends in this case upon the climatic differential between evaporation and rainfall:

Evaporation-Rainfall Differential	Pond Area
0.6 m/yr (2 ft/yr)	0.060 ha/cu m/day (560 acres/MGD)
1.2 m/yr (4 ft/yr)	0.030 ha/cu m/day (280 acres/MGD)
1.8 m/yr (6 ft/yr)	0.020 ha/cu m/day (190 acres/MGD)

The power requirements and non-water quality aspects of solar evaporation ponds are the same as for settling ponds. However, since the residue in this case is soluble, extra disposal precautions must be taken to prevent leaching into groundwaters.

Single-Effect and Multiple-Effect Evaporators

The installed capital and operating costs for single-effect evaporators and for a 6-effect evaporator (all stainless-steel construction) are as follows:

	Installed Capital Costs		O & M Costs, $/1,000 gal	
Capacity, GPD	1 Effect	6 Effects	1 Effect	6 Effects
10,000	8,000		5.64	
50,000	28,000		5.51	
100,000	45,000	177,000	5.45	1.30
250,000	80,000	373,000	5.39	1.22

500,000	146,000	665,000	5.36	1.18
1,000,000	267,000	1,225,000	5.33	1.14

(Note: Liters = 3.785 x Gallons)

The energy requirements for single-effect evaporators are 555 kg-cal per kilogram of water evaporated (1,000 Btu/lb); while the 6-effect evaporator requires 100 kg-cal per kilogram of water evaporated (180 Btu/lb). The non-water quality aspects are the same as for solar evaporation ponds.

NON-WATER QUALITY IMPACT

Air Pollution

The proposed guidelines are not expected to increase air emissions. In fact, the cited technologies should decrease air emissions in some cases where dry air pollution equipment is suggested to precede wet scrubbers. Volatilization of hazardous substances, such as fluorine, from ponds is not expected to present a problem since addition of lime will precipitate most fluorides.

Solid Waste

Solid waste disposal will be the chief non-water quality area impacted by the proposed guidelines. Neutralization of acidic waste streams with lime or limestone will increase the amounts of sludge, especially when soluble phosphates and sulfates are precipitated. Installation of dry air pollution control equipment will reduce the water content of wasted solids. In addition return of collected solids to the process may be feasible. As stated in section VII, arsenic rich solid residues accumulate from the purification of phosphoric acid and of phosphorus pentasulfide. Burial in a controlled area is the standard disposal method. Special disposal methods as mentioned previously in this section may be necessary to prevent leachate from reaching surface or ground waters. Solid waste quantities and constituents are listed in Tables 9 and 10.

Energy Requirements

The energy requirements for the proposed treatment technologies are listed in table 19. For the best practicable control technology currently available the added energy requirements are insignificant when compared to the process energy requirements. Except for the production of phosphorus, energy does not significantly enter into the product cost. For best available technology economically available, the additional energy requirements for PCl_3 and $POCl_3$ are substantial. This is due to the assumption that solar evaporation ponds

TABLE 19

ENERGY REQUIREMENTS
FOR RECOMMENDED GUIDELINES

Chemical	Process Energy Requirement KWH/Kkg	Treatment Energy Requirement KWH/Kkg	Percentage Energy Increase
P_4	15,400	7.06	0.05
H_3PO_4	48	0.000025	0.01
P_2O_5	94	0.0126	0.01
P_2S_5	9	0.75	8.3
PCl_3 (BPCTCA)	27	0.13	0.48
PCl_3 (BATEA)	27	293	1000
$POCl_3$ (BPCTCA)	28	0.063	0.22
$POCl_3$ (BATEA)	28	146	520
$Na_5P_3O_{10}$	43	0	0
Calcium Phosphates animal feed grade	-	0.16	-
Calcium Phosphates food grade	-	0.053	-

BPCTCA - best practicable control technology currently available

BATEA - best available technology economically achievable

may not be possible in a given locale and evaporators may be necessary.

Ground Water

Since settling pond evaporation ponds are extensively used for waste water treatment in the phosphate industry, it is highly recommended that all such ponds be sealed or lined so as to prevent any leakage of contaminated process waters to ground waters.

Noise

No overall adverse affect on the level of noise is expected, although individual equipment may have excessive noise levels (e.g. pumps and centrifuges).

SECTION IX

EFFLUENT REDUCTION ATTAINABLE THROUGH THE APPLICATION OF THE BEST PRACTICABLE CONTROL TECHNOLOGY CURRENTLY AVAILABLE, EFFLUENT GUIDELINES AND LIMITATIONS

INTRODUCTION

The effluent limitations which must be achieved by July 1, 1977 are based on the degree of effluent reduction attainable through the application of the best practicable control technology currently available. For the phosphate industry, this level of technology is based on the best existing performance by notable plants of various sizes, ages and chemical processes within each of the industry's categories. In some cases where no truly notable plants were surveyed, this level of technology is based upon state-of-the-art unit operations commonly employed in the chemical industry.

Best practicable control technology currently available emphasizes treatment facilities at the end of a manufacturing process but also includes the control technology within the process itself. Examples of in-process control techniques which are used within the industry are:

* manufacturing process controls
* recycle and alternative uses of water
* recovery and/or reuse of waste water constituents
* dry collection of airborne solids instead of (or prior to) wet scrubbing.

Consideration was also given to:

a. The total cost of application of technology in relation to the effluent reduction benefits to be achieved from such application;

b. The size and age of equipment and facilities involved;

c. The process employed;

d. The engineering aspects of the application of various types of control techniques;

e. Process changes;

f. Non-water quality environmental impact (including energy requirements).

PROCESS WASTE WATER GUIDELINES

Process water is defined as any water coming into contact with raw materials, intermediates, products, by-products, or gas or liquid that has accumulated such constituents. All values of guidelines and limitations for total dissolved solids (TDS), total suspended solids (TSS), metals and harmful pollutants and and other parameters are expressed as consecutive 30 day averages in units of pounds of parameter per ton and kilograms of parameter per metric ton of product produced except where expressed as a concentration.

Based upon the information contained in Sections III through VIII of this report, the following determinations were made on the degree of effluent reduction attainable with the application of the best practicable control technology currently available in the phosphate manufacturing industry.

The Phosphorus Production Subcategory

Phossy Water

Because of the extremely harmful nature of elemental phosphorus, it is standard practice within the industry to maintain tight control over the discharge of phossy water, as discussed in Section VII.

TVA at Muscle Shoals, Alabama segregates phossy water from all other process and cooling waters, treats the phossy water, and then recycles the treated water back to the process. The clarifier underflow is recycled back to the process, but because of the buildup of dissolved solids, about 6 per cent of this clarified water is bled off.

It is apparent from the discussion in section VII that existing practicable technology can eliminate the requirements for any discharge at this TVA plant. Lime treatment of the blowdown followed by sedimentation of the precipitated phosphates and fluorides would remove the materials necessitating a blowdown, so that this treated blowdown could be recombined with the remainder of the clarified phossy water for return to the process.

There are three examples of plants which have achieved zero discharge of phossy water: Plants 159, 028, and 181.

Hence, three plants have recognized the undesirability of elemental phosphorus in any discharge and have also recognized that no practicable treatment system can remove a sufficient amount of elemental phosphorus to permit effluent discharge of phossy water wastes. They have all solved this dilema by evaporating sufficient phossy water rather than by discharge. One plant uses an evaporation pond, while two others exploit other process heat loads for in-process water evaporation.

In view of this clear-cut demonstration within the industry, it is recommended that the best practicable control technology currently available for phossy water wastes be no discharge of pollutants to navigable waters.

Process Waters Other Than Phossy Water

The standard techniques for treating the waste waters from calciner scrubbers and from slag quenching are lime treatment and settling ponds, which perform the following functions:

* Neutralization of acid waste waters
* Sedimentation of much of the original suspended solids in the waste waters (silica, iron oxide, and others)
* Precipitation and sedimentation of much of the phosphates, fluorides and sulfates which were dissolved in the original waste waters.
* Dissipation of the process heat to the atmosphere during the extended residence in the settling ponds.
* Reduction in the waste water quantity as a result of net evaporation during the extended residence in the settling ponds.
* Where phossy water is combined with these other process waters, some oxidation of the elemental phosphorus to phosphates is accomplished.

At Plant 181, the lime-treated water from all sources is clarified in settling ponds, and the clarified water is held in reuse water supply ponds. There is total recycle of all water at this plant, with zero discharge. Because phosphates and fluorides are removed by lime treatment and sedimentation, there is no requirement to bleed off water for the control of dissolved solids.

Under conditions of very abnormally-high rainfall which would exceed the capacity of the pond system, the only overflow would be from the final reuse water supply ponds, thereby minimizing the quantities of pollutants even occasionally discharged. The recirculating water system runs at a water deficit, due to evaporation in the process and to net evaporation in the pond system. Hence, fresh makeup water is supplied, and can be controlled to compensate for temporary swings in the pond evaporation/rainfall balance.

The TVA plant at Muscle Shoals, Alabama granulates the slag by quenching with a high-velocity jet of water which is recirculated from a sump in the slag pit. In this TVA operation, the cooling water and the scrubber liquors are used for makeup in slag quenching. The granulated slag effectively neutralizes these waters and also acts to filter out the

scrubbed solids, which become part of the slag pile to be sold. Nearly all of the soluble phosphate and 95 per cent of the fluoride is removed by the slag, and the fluoride concentration is reduced to 30 mg/l. Hence, TVA utilizes slag treatment instead of lime treatment, made possible because the slag is finely-divided. Sufficient waste water treatment is obtained by TVA to enable the plant to completely reuse this water without any discharge.

Two other phosphorus plants which utilize lime treatment and sedimentation for process water treatment are Plants 028 and 159. Tables 14 and 15 list (respectively) the effluent concentrations and quantities discharged from these plants, neither of which recycle treated waste water. There are three significant differences between these two plants:

* Plant 028 discharges into the same waterway as the plant intake so that its discharge responsibility is the net increase in constituent quantities. Plant 159 intakes ground water and discharges into surface water so that its responsibility is the gross amount of constituent quantities.

* It is apparent from the "Intake" columns of Tables 14 and 15 that the intake of Plant 159 contains much more dissolved solids (and specifically F, PO_4 and SO_4) than the intake of Plant 028.

* The waste water quantity per cent of production for Plant 028 is three times that of Plant 159.

The above three differences are interrelated and affect the quantities of fluoride, phosphate and sulfate discharged by Plant 159 because the effluent concentrations are of the same magnitude of the solubilities of the corresponding calcium salts. Hence, the effluent quantities are significantly influenced by factors other than the treatment of the process waters.

The effectiveness of control and treatment techniques used by the four phosphorus plants cited are summarized in Table 13. Plants 028 and 159 achieve very high (97 to 99+%) control and treatment efficiencies and correspondingly low quantities (although not absolutely zero) of discharged constituents.

In areas of the country where very severe and extended cold weather prevails, total recycle of process water become difficult for two reasons:

1. The return water piping and pumping must be protected against freezing. However, technology such as buried

water mains and enclosed, heated pumping stations has been aptly demonstrated in the chemical industry and in water supply operations.

2. The settling ponds may freeze. In a total recycle system, this circumstance would prevent the required water from being supplied back to the process. If auxiliary fresh water supply were provided to uncouple the process from frequent climatic perturbations, the pond system would have to consist of sufficient holding capacity to prevent temporary overflow and would have to contain sufficient evaporative capacity to prevent long-term accumulation of water.

Both of the above difficulties are formidable but not unyielding to practicable, currently available technology. All aspects of manufacturing including waste management assume different stances when the chosen environment is far more severe than the norm; however, currently-available technology can cope with environmental challenges of this sort including the special challenges in waste management.

Recommended Effluent Limitations Guidelines Based Upon Best Practicable Control Technology Currently Available

In view of the existence of three plants (028, 159, and 181) which have already achieved zero discharge of elemental phosphorus; in view of the existence of two plants (TVA and 181) which have already achieved zero discharge of other process waters; in view of the conclusion that "Best Practicable Control Technology Currently Available" is sufficient to achieve zero discharge in other plants (such as Plants 028 and 159); and in full view of the statutory national goal of eliminating the discharge of all pollutants; it is recommended that the best practicable control technology currently available be no discharge of process waste water pollutants to navigable waters.

Waste water from Ore Washing the Beneficiation

The best practicable control technology currently available recommended in the previous paragraphs do not include wastes from the beneficiation or washing of phosphate rock. This beneficiation is commonly but not exclusively conducted at a separate off-site location. The huge raw waste load from benefication, 7.5 kkg of gangue per kkg of phosphorus eventually produced, warrants a separate study and separate effluent guidelines.

The Phosphorus Consuming Subcategory

Phossy Water

Gross discharges of phossy water are presently avoided by pumping displaced phossy water form the plant's phosphorus storage tank back into the emptying rail car which brought the phosphorus, and by transporting this displaced phossy water to the phosphorus producing plant for treatment and/or reuse. Such is the practice at Plants 037 and 192.

Smaller quantities of phossy water discharge may also be eliminated through the use of standard engineering techniques. The phosphorus storage tank level control system may be altered to provide an auxiliary water overflow tank with return of the water to the main tank. The avoidance of elemental phosphorus in plant sewer lines can be implemented by more stringent process and operator controls and procedures and by providing traps downstream of reaction vessels.

In view of the harmful qualities of elemental phosphorus and in view of the available choices from state-of-the-art control techniques, the recommended best practicable control technology currently available for phossy water is no discharge of pollutants.

Phosphoric Acid Manufacture

Exemplary Plant 075 operates without the discharge of any process water. There is no fundamental or practical reason why process water should be discharged at all from any dry-process phosphoric acid plant. Minor leaks and spills may be minimized, collected and treated using control techniques generally available and demonstrated in the industry.

The recommended effluent guideline of no discharge of process waste water pollutants applies generally and with special emphasis upon elemental phosphorus (i.e., phossy water) and upon arsenic residues from the purification of phosphoric acid.

Phosphorus Pentoxide Manufacture

The single raw waste constituent is phosphoric acid from water tail-gas seals. Application of two standard techniques would enable total recycle of this waste water:

1. Reduction in waste water quantites by using dilute caustic or lime slurry as tail gas liquor instead of pure water, increasing the absorptive capacity for P_2O_5.

2. Lime treatment and sedimentation to neutralize and to remove the phosphate, permitting total recycle.

In view of the straightforward application of these two techniques, the recommended best practicable control technology currently available

effluent guideline is no discharge of process waste water pollutants. Since total recycle is practicable technology, this recommended guideline is not affected by modest inaccuracies in the standard raw waste as estimated in Section V.

Phosphorus Pentasulfide Manufacture

The sole source of process waste water is the scrubber liquor for fumes from casting liquid P_2S_5. One control technique would be the use of inert-atmosphere casting or vacuum casting to completely eliminate the need for scrubbing. As an alternate to this approach, the application of three standard techniques would permit total recycle of scrubber water:

1. Use of dilute caustic or lime slurry instead of pure water would reduce the waste water quantities by increasing the adsorptive capacity for P_2O_5 and SO_2.

2. Partial recycle of scrubber liquor from a sump would reduce the waste water quantity by decoupling the buildup of absorbed acids from the mass-transfer requirements for high scrubber flowrates.

3. Lime treatment and sedimentation to neutralize and to remove phosphate, sulfite and sulfate would permit total recycle.

In view of these different practicable alternates, the recommended best practicable control technology currently available is no discharge of process waste water pollutants to navigable waters. Since total recycle is practicable technology, this recommended guideline is not affected by modest inaccuracies in the standard raw waste load as estimated in Section V.

This guideline also applies to any arsenic-rich residues from the purification of P_2S_5; these solid residues may be disposed of by burial as in Plants 147 and 192.

Phosphorus Trichloride Manufacture

The acid wastes from phosphorus trichloride manufacture arise from the hydrolysis of PCl_3 in scrubber water from the reactor/ still, from product storage tanks, from product transferring operations and from container cleaning. The scrubber water may be collected in a sump and recycled to decrease the wasted quantity of scrubber water (while still maintaining sufficient scrubber flow rates for effective mass transfer) and to increase the concentration of waste constituents.