United States
Environmental Protection
Agency

Effluent Guidelines Division
WH-552
Washington DC 20460

EPA 440/1-84/073
June 1984

Water

EPA

Development Document for Effluent Limitations Guidelines and Standards for the Aluminum Forming Point Source Category

Final

Volume I

566-107P
202-~~260-7451~~
~~Fax: 202-260-7186~~
jett.george@epa.gov

George M. Jett
Chemical Engineer
U.S. Environmental Protection Agency
Engineering and Analysis Division (4303)
1200 Pennsylvania Avenue, NW
Washington, D.C. 20460

DEVELOPMENT DOCUMENT

for

EFFLUENT LIMITATIONS GUIDELINES AND STANDARDS

for the

ALUMINUM FORMING POINT SOURCE CATEGORY

William D. Ruckelshaus
Administrator

Jack E. Ravan
Assistant Administrator for Water

Steven Schatzow
Director
Office of Water Regulations and Standards

Jeffery D. Denit
Director, Effluent Guidelines Division

Ernst P. Hall, Chief
Metals & Machinery Branch

Janet K. Goodwin
Technical Project Officer

June 1984

U.S. Environmental Protection Agency
Office of Water
Office of Water Regulations and Standards
Effluent Guidelines Division
Washington, D.C. 20460

CONTENTS

Section	Title	Page
I	SUMMARY AND CONCLUSIONS	1
II	RECOMMENDATIONS	13
	BPT	13
	BAT	31
	NSPS	41
	PSES	58
	PSNS	71
III	INTRODUCTION	87
	Legal Authority	87
	Data Collection and Utilization	87
	Data Collection Since Proposal	91
	Description of the Aluminum Forming Category	93
	Description of Aluminum Forming Processes	97
IV	INDUSTRY SUBCATEGORIZATION	135
	Basis for Subcategorization	135
	Production Normalizing Parameter	146
	Description of Subcategories	148
V	WATER USE AND WASTEWATER CHARACTERISTICS	165
	Sources of Data	165
	Presentation of Wastewater Characteristics	174
	Core Operations Unique to Major Forming Operations	175
	Core Operations Not Unique to Specific Forming Operations	179
	Ancillary Operations	181
	Treated Wastewater Samples	187
VI	SELECTION OF POLLUTANT PARAMETERS	541
	Rationale for Selection of Pollutant Parameters	542
	Description of Pollutant Parameters	543
	Pollutant Selection for Core Waste Streams	616
	Pollutant Selection for Ancillary Waste Streams	647
	Pollutant Selection by Subcategory	674
VII	CONTROL AND TREATMENT TECHNOLOGY	697
	End-of-Pipe Treatment Technologies	697
	Major Technologies	698
	Major Technology Effectiveness	720

CONTENTS (Continued)

Section	Title	Page
	Minor Technologies	736
	In-Plant Technology	771
VIII	COST OF WASTEWATER TREATMENT AND CONTROL	855
	General Approach	855
	Cost Estimation Methodology: Pre-Proposal	856
	Cost Estimation Methodology: Post-Proposal	880
	Summary of Costs	897
	Normal Plant	897
	Nonwater Quality Aspects	897
IX	BEST PRACTICABLE CONTROL TECHNOLOGY CURRENTLY AVAILABLE	959
	Technical Approach to BPT	959
	Rolling with Neat Oils Subcategory	965
	Rolling With Emulsions Subcategory	972
	Extrusion Subcategory	978
	Forging Subcategory	984
	Drawing with Neat Oils Subcategory	987
	Drawing with Emulsions or Soaps Subcategory	991
	Application of the Limitations in Permits	995
X	BEST AVAILABLE TECHNOLOGY ECONOMICALLY ACHIEVABLE	1049
	Technical Approach to BAT	1049
	Selected Option for BAT	1057
	Regulated Pollutant Parameters	1058
	Rolling with Neat Oils Subcategory	1061
	Rolling with Emulsions Subcategory	1064
	Extrusion Subcategory	1065
	Forging Subcategory	1068
	Drawing with Neat Oils Subcategory	1070
	Drawing with Emulsions or Soaps Subcategory	1072
XI	NEW SOURCE PERFORMANCE STANDARDS	1147
	Technical Approach to NSPS	1147
	NSPS Option Selection	1148
	Regulated Pollutant Parameters	1149
	New Source Performance Standards	1150
XII	PRETREATMENT STANDARDS	1173
	Introduction of Aluminum Forming Wastewater into POTW	1173
	Technical Approach to Pretreatment	1176

CONTENTS (Continued)

Section	Title	Page
	PSES and PSNS Option Selection	1177
	Regulated Pollutant Parameters	1178
	Pretreatment Standards	1179
XIII	BEST CONVENTIONAL POLLUTANT CONTROL TECHNOLOGY	1241
XIV	ACKNOWLEDGMENT	1243
XV	REFERENCES	1245
XVI	GLOSSARY	1261

TABLES (Continued)

Section	Title	Page
V-24	Sampling Data Extrusion Dummy Block Cooling Raw Wastewater	252
V-25	Drawing with Neat Oils Spent Lubricants	253
V-26	Drawing with Emulsions or Soaps Spent Emulsion	254
V-27	Frequency of Occurence of Toxic Pollutants Drawing with Emulsions or Soaps Spent Emulsion Raw Wastewater	255
V-28	Sampling Data Drawing with Emulsions or Soaps Spent Emulsions Raw Wastewater	259
V-29	Sawing Spent Lubricant	260
V-30	Frequency of Occurence of Toxic Pollutants Sawing Spent Lubricant Raw Wastewater	261
V-31	Sampling Data Sawing Spent Lubricant Raw Wastewater	265
V-32	Frequency of Occurence of Toxic Pollutants Degreasing Spent Solvents Raw Wastewater	269
V-33	Sampling Data Degreasing Spent Solvents Raw Wastewater	273
V-34	Annealing Atmosphere Scrubber Liquor	274
V-35	Frequency of Occurence of Toxic Pollutants Annealing Atmosphere Scrubber Liquor Raw Wastewater	275
V-36	Sampling Data Annealing Atmosphere Scrubber Liquor Raw Wastewater	279
V-37	Rolling Solution Heat Treatment Contact Cooling Water	280
V-38	Frequency of Occurence of Toxic Pollutants Rolling Solution Heat Treatment Contact Cooling Water Raw Wastewater	281
V-39	Sampling Data Rolling Solution Heat Treatment Contact Cooling Water Raw Wastewater	285
V-40	Extrusion Press Heat Treatment Contact Cooling Water	288
V-41	Frequency of Occurence of Toxic Pollutants Extrusion Press Heat Treatment Contact Cooling Water Raw Wastewater	289
V-42	Sampling Data Extrusion Press Heat Treatment Contact Cooling Water Raw Wastewater	293
V-43	Extrusion Solution Heat Treatment Contact Cooling Water	299
V-44	Frequency of Occurence of Toxic Pollutants Extrusion Solution Heat Treatment Contact Cooling Water Raw Wastewater	300
V-45	Sampling Data Extrusion Solution Heat Treatment Contact Cooling Water Raw Wastewater	304
V-46	Forging Solution Heat Treatment Contact Cooling Water	307
V-47	Frequency of Occurence of Toxic Pollutants Forging Solution Heat Treatment Contact Cooling Water Raw Wastewater	308

TABLES (Continued)

Section	Title	Page
V-48	Sampling Data Forging Solution Heat Treatment Contact Cooling Water Raw Wastewater	312
V-49	Drawing Solution Heat Treatment Contact Cooling Water	317
V-50	Frequency of Occurence of Toxic Pollutants Drawing Solution Heat Treatment Contact Cooling Water Raw Wastewater	318
V-51	Sampling Data Drawing Solution Heat Treatment Contact Cooling Water Raw Wastewater	322
V-52	Cleaning or Etching Bath	326
V-53	Frequency of Occurence of Toxic Pollutants Cleaning or Etching Bath Raw Wastewater	328
V-54	Sampling Data Cleaning or Etching Bath Raw Wastewater	332
V-55	Cleaning or Etching Rinse	349
V-56	Frequency of Occurence of Toxic Pollutants Cleaning or Etching Rinse Raw Wastewater	351
V-57	Sampling Data Cleaning or Etching Rinse Raw Wastewater	355
V-58	Cleaning or Etching Scrubber Liquor	391
V-59	Frequency of Occurence of Toxic Pollutants Cleaning or Etching Scrubber Liquor Raw Wastewater	392
V-60	Sampling Data Cleaning or Etching Scrubber Liquor Raw Wastewater	396
V-61	Forging Scrubber Liquor	397
V-62	Frequency of Occurence of Toxic Pollutants Forging Scrubber Liquor Raw Wastewater	398
V-63	Sampling Data Forging Scrubber Liquor Raw Wastewater	402
V-64	Direct Chill Casting Contact Cooling Water (Aluminum Forming Plants)	404
V-65	Direct Chill Casting Contact Cooling Water (Primary Aluminum Subcategory)	406
V-66	Frequency of Occurence of Toxic Pollutants Direct Chill Casting Contact Cooling Water Raw Wastewater	408
V-67	Sampling Data Direct Chill Casting Cooling Water Raw Wastewater	412
V-68	Continuous Rod Casting Contact Cooling Water (Aluminum Forming Plants)	426
V-69	Continuous Rod Casting Contact Cooling Water (Primary Aluminum Plants)	427
V-70	Continuous Rod Casting Spent Lubricant	428
V-71	Continuous Sheet Casting Spent Lubricant	429
V-72	Degassing Scrubber Liquor (Primary Aluminum Plants)	430
V-73	Frequency of Occurence of Toxic Pollutants Degassing Scrubber Liquor Raw Wastewater	431
V-74	Sampling Data Degassing Scrubber Liquor Raw Wastewater	435

TABLES (Continued)

Section	Title	Page
V-75	Extrusion Press Hydraulic Fluid Leakage	436
V-76	Frequency of Occurence of Toxic Pollutants Extrusion Press Hydraulic Fluid Leakage Raw Wastewater	437
V-77	Sampling Data Extrusion Press Hydraulic Fluid Leakage Raw Wastewater	441
V-78	Sampling Data Additional Wastewater Raw Wastewater	445
V-79	Miscellaneous Nondescript Wastewater	460
V-80	Sampling Data Plant B Treated Wastewater	461
V-81	Sampling Data Plant C Treated Wastewater	465
V-82	Sampling Data Plant D Treated Wastewater	466
V-83	Sampling Data Plant E Treated Wastewater	471
V-84	Sampling Data Plant H Treated Wastewater	479
V-85	Sampling Data Plant J Treated Wastewater	481
V-86	Sampling Data Plant K Treated Wastewater	483
V-87	Sampling Data Plant L Treated Wastewater	485
V-88	Sampling Data Plant P Treated Wastewater	486
V-89	Sampling Data Plant Q Treated Wastewater	488
V-90	Sampling Data Plant U Treated Wastewater	490
V-91	Sampling Data Plant V Treated Wastewater	494
V-92	Sampling Data Plant AA Treated Wastewater	596
V-93	Sampling Data Plant BB Treated Wastewater	500
V-94	Sampling Data Plant DD Treated Wastewater	504
V-95	Sampling Data Plant EE Treated Wastewater	510
VI-1	List of 129 Toxic Pollutants	675
VI-2	Priority Pollutant Disposition Core Operations	681
VI-3	Priority Pollutant Disposition Ancillary Operations	685
VI-4	Priority Pollutant Disposition by Subcategpry	692
VII-1	pH Control Effect on Metals Removal	788
VII-2	Effectiveness of Sodium Hydroxide for Metals Removal	789
VII-3	Effectiveness of Lime and Sodium Hydroxide for Metals Removal	790
VII-4	Theoretical Solubilities of Hydroxides and Sulfides of Selected Metals in Pure Water	791
VII-5	Sampling Data from Sulfide Precipitation-Sedimentation Systems	792
VII-6	Sulfide Precipitation-Sedimentation Performance	793
VII-7	Ferrite Co-precipitation Performance	794
VII-8	Concentration of Total Cyanide (mg/l)	795
VII-9	Multimedia Filtration Performance	796
VII-10	Performance of Selected Settling Systems	797
VII-11	Skimming Performance	798

TABLES (Continued)

Section	Title	Page
VII-12	Trace Organic Removal by Skimming API Plus Belt Skimmers (From Plant 06058)	799
VII-13	Combined Metals Data Effluent Values (mg/l)	800
VII-14	L&S Performance Additional Pollutants	801
VII-15	Combined Metals Data Set - Untreated Wastewater	802
VII-16	Maximum Pollutant Level in Untreated Wastewater Additional Pollutants (mg/l)	803
VII-17	Precipitation-Settling-Filtration (LS&F) Performance Plant A	804
VII-18	Precipitation-Settling-Filtration (LS&F) Performance Plant B	805
VII-19	Precipitation-Settling-Filtration (LS&F) Performance Plant C	806
VII-20	Summary of Treatment Effectiveness (mg/l)	807
VII-21	Chemical Emulsion Breaking Efficiencies	808
VII-22	Treatability Rating of Priority Pollutants Utilizing Carbon Adsorption	809
VII-23	Classes of Organic Compounds Adsorbed on Carbon	810
VII-24	Ion Exchange Performance (all values mg/l)	811
VII-25	Peat Adsorption Performance	812
VII-26	Membrane Filtration System Effluent	813
VII-27	Ultrafiltration Performance	814
VIII-1	Major Differences Between Cost Methodologies	902
VIII-2	Cost Equations for Recommended Treatment and Control Technologies - Pre-Proposal	903
VIII-3	Oily Sludge Production Associated with Aluminum Forming	909
VIII-4	Lime Dosage Requirements and Lime Sludge Production Associated with Aluminum Forming	910
VIII-5	Carbon Exhaustion Rates Associated with Aluminum Forming	911
VIII-6	Cost Equations for Recommended Treatment and Control Technologies - Post-Proposal	912
VIII-7	Components of Total Capital Investment - Post-Proposal	916
VIII-8	Components of Total Annualized Costs - Post-Proposal	917
VIII-9	Wastewater Sampling Frequency - Post-Proposal	918
VIII-10	Cost Program Pollutant Parameters	919
VIII-11	Aluminum Forming Category Cost of Compliance ($1982)	920

TABLES (Continued)

Section	Title	Page
VIII-12	Characteristics of the Rolling with Neat Oils Subcategory Normal Plant Used for Costing	921
VIII-13	Characteristics of the Rolling with Emulsion Subcategory Normal Plant Used for Costing	922
VIII-14	Characteristics of the Extrusion Subcategory Normal Plant Used for Costing	923
VIII-15	Characteristics of the Forging Subcategory Normal Plant Used for Costing	924
VIII-16	Characteristics of the Drawing with Neat Oils Subcategory Normal Plant Used for Costing	925
VIII-17	Characteristics of the Drawing with Emulsions or Soaps Subcategory Normal Plant Used for Costing	926
VIII-18	Summary of the Aluminum Forming Normal Plant Cost ($1982)	927
IX-1	Production Operations-Rolling with Neat Oils Subcategory	998
IX-2	Comparison of Wastewater Discharge Rates From Cleaning or Etching Rinse Streams	1000
IX-3	Concentration Range of Pollutants Considered for BPT Regulation in Core and Ancillary Waste Streams - Rolling with Neat Oils Subcategory	1001
XI-4	BPT Mass Limitations for the Rolling with Neat Oils Subcategory	1003
IX-5	Production Operations-Rolling with Emulsions Subcategory	1007
IX-6	Concentration Range of Pollutants Considered for BPT Regulation in Core and Ancillary Waste Streams - Rolling with Emulsions Subcategory	1008
IX-7	BPT Mass Limitations for the Rolling with Emulsions Subcategory	1010
IX-8	Production Operations - Extrusion Subcategory	1013
IX-9	Concentration Range of Pollutants Considered for BPT Regulation in Core and Ancillary Waste Streams - Extrusion Subcategory	1014
IX-10	BPT Mass Limitations for the Extrusion Subcategory	1016
IX-11	Production Operations - Forging Subcategory	1020
IX-12	Concentration Range of Pollutants Considered for BPT Regulation in Core and Ancillary Waste Streams - Forging Subcategory	1021
IX-13	BPT Mass Limitations for the Forging Subcategory	1023
IX-14	Production Operations - Drawing with Neat Oils Subcategory	1026

TABLES (Continued)

Section	Title	Page
IX-15	Concentration Range of Pollutants Considered for BPT Regulation in Core and Ancillary Waste Streams - Drawing with Neat Oils Subcategory	1027
IX-16	BPT Mass Limitations for the Drawing with Neat Oils Subcategory	1029
IX-17	Production Operations - Drawing with Emulsions or Soaps Subcategory	1033
IX-18	Comparison of Wastewater Discharge Rates From Drawing with Emulsion or Soap Streams	1034
IX-19	Concentration Range of Pollutants Considered for BPT Regulation in Core and Ancillary Waste Streams - Drawing with Emulsions or Soaps Subcategory	1035
IX-20	BPT Mass Limitations for the Drawing with Emulsions or Soaps Subcategory	1037
IX-21	Allowable Discharge Calculations for Plant X in Example 1	1041
IX-22	Allowable Discharge Calculations for Plant Y in Example 2	1042
X-1	Capital and Annual Cost Estimates for BAT Options Total Subcategory	1074
X-2	Capital and Annual Cost Estimates for BAT Options Direct Dischargers	1075
X-3	Pollutant Reduction Benefits - Rolling with Neat Oils Subcategory	1076
X-4	Pollutant Reduction Benefits - Rolling with Emulsions Subcategory	1078
X-5	Pollutant Reduction Benefits - Extrusion Subcategory	1080
X-6	Pollutant Reduction Benefits - Forging Subcategory	1082
X-7	Pollutant Reduction Benefits - Drawing with Neat Oils Subcategory	1085
X-8	Pollutant Reduction Benefits - Drawing with Emulsions or Soaps Subcategory	1087
X-9	Pollutant Reduction Benefits - Direct Dischargers - Rolling with Neat Oils Subcategory	1089
X-10	Pollutant Reduction Benefits - Direct Dischargers - Rolling with Emulsions Subcategory	1091
X-11	Pollutant Reduction Benefits - Direct Dischargers - Extrusion Subcategory	1093
X-12	Pollutant Reduction Benefits - Direct Dischargers - Drawing with Neat Oils Subcategory	1095
X-13	Pollutant Reduction Benefits - Direct Dischargers - Drawing with Emulsions or Soaps Subcategory	1097

TABLES (Continued)

Section	Title	Page
X-14	Pollutant Reduction Benefits - Normal Plant - Rolling with Neat Oils Subcategory	1099
X-15	Pollutant Reduction Benefits - Normal Plant - Rolling with Emulsions Subcategory	1100
X-16	Pollutant Reduction Benefits - Normal Plant - Extrusion Subcategory	1101
X-17	Pollutant Reduction Benefits - Normal Plant - Forging Subcategory	1102
X-18	Pollutant Reduction Benefits - Normal Plant - Drawing with Neat Oils Subcategory	1103
X-19	Pollutant Reduction Benefits - Normal Plant - Drawing with Emulsions or Soaps Subcategory	1104
X-20	Rolling with Neat Oils Subcategory Treatment Performance - Normal Plant	1105
X-21	Rolling with Emulsions Subcategory Treatment Performance - Normal Plant	1106
X-22	Extrusion Subcategory Treatment Performance - Normal Plant	1107
X-23	Forging Subcategory Treatment Performance - Normal Plant	1108
X-24	Drawing with Neat Oils Subcategory Treatment Performance - Normal Plants	1109
X-25	Drawing with Emulsions Subcategory Treatment Performance - Normal Plant	1110
X-26	TTO - Evaluation of Oil Treatment Effectiveness on Toxics Removal	1111
X-27	Production Operations - Rolling with Neat Oils Subcategory	1112
X-28	BAT Mass Limitations for the Rolling with Neat Oils Subcategory	1113
X-29	Production Operations - Rolling with Emulsions Subcategory	1118
X-30	BAT Mass Limitations for the Rolling with Emulsions Subcategory	1119
X-31	Production Operations - Extrusion Subcategory	1122
X-32	BAT Mass Limitations for the Extrusion Subcategory	1123
X-33	Production Operations - Forging Subcategory	1127
X-34	BAT Mass Limitations for the Forging Subcategory	1128
X-35	Production Operations - Drawing with Neat Oils Subcategory	1131
X-36	BAT Mass Limitations for the Drawing with Neat Oils Subcategory	1132
X-37	Production Operations - Drawing with Emulsions or Soaps Subcategory	1136

TABLES (Continued)

Section	Title	Page
X-38	BAT Mass Limitations for the Drawing with Emulsions or Soaps Subcategory	1137
XI-1	NSPS for the Rolling with Neat Oils Subcategory	1151
XI-2	NSPS for the Rolling with Emulsions Subcategory	1155
XI-3	NSPS for the Extrusion Subcategory	1158
XI-4	NSPS for the Forging Subcategory	1162
XI-5	NSPS for the Drawing with Neat Oils Subcategory	1165
XI-6	NSPS for the Drawing with Emulsions or Soaps Subcategory	1169
XII-1	POTW Removals of the Toxic Pollutants Found in Aluminum Forming Wastewater	1180
XII-2	Capital and Annual Cost Estimates for BAT Options Indirect Dischargers ($1982)	1182
XII-3	Pollutant Reduction Benefits - Indirect Dischargers - Rolling with Neat Oils Subcategory	1183
XII-4	Pollutant Reduction Benefits - Indirect Dischargers - Rolling with Emulsions Subcategory	1185
XII-5	Pollutant Reduction Benefits - Indirect Dischargers - Extrusion Subcategory	1187
XII-6	Pollutant Reduction Benefits - Indirect Dischargers - Forging Subcategory	1189
XII-7	Pollutant Reduction Benefits - Indirect Dischargers - Drawing with Neat Oils Subcategory	1192
XII-8	Pollutant Reduction Benefits - Indirect Dischargers - Drawing with Emulsions or Soaps Subcategory	1194
XII-9	PSES for the Rolling with Neat Oils Subcategory	1196
XII-10	PSES for the Rolling with Emulsions Subcategory	1200
XII-11	PSES for the Extrusion Subcategory	1203
XII-12	PSES for the Forging Subcategory	1207
XII-13	PSES for the Drawing with Neat Oils Subcategory	1210
XII-14	PSES for the Drawing with Emulsions or Soaps Subcategory	1214
XII-15	PSNS for the Rolliwg with Neat Oils Subcategory	1219
XII-16	PSNS for the Rolling with Emulsions Subcategory	1222
XII-17	PSNS for the Extrusion Subcategory	1225
XII-18	PSNS for the Forging Subcategory	1229
XII-19	PSNS for the Drawing with Neat Oils Subcategory	1232
XII-20	PSNS for the Drawing with Emulsions or Soaps Subcategory	1236

FIGURES

Section	Title	Page
III-1	Aluminum Forming Products	122
III-2	Geographical Distribution of Aluminum Forming Plants	123
III-3	Common Rolling Mill Configurations	124
III-4	Geographical Distribution of Plants with Hot or Cold Rolling	125
III-5	Direct Extrusion	126
III-6	Geographical Distribution of Plants with Extrusion	127
III-7	Forging	128
III-8	Geographical Distribution of Plants with Forging	129
III-9	Tube Drawing	130
III-10	Geographical Distribution of Plants with Tube, Wire, Rod and Bar Drawing	131
III-11	Direct Chill Casting	132
III-12	Continuous Casting	133
III-13	Vapor Degreasing	134
V-1	Wastewater Sources at Plant A	516
V-2	Wastewater Sources at Plant B	517
V-3	Wastewater Sources at Plant C	518
V-4	Wastewater Sources at Plant D	519
V-5	Wastewater Sources at Plant E	520
V-6	Wastewater Sources at Plant F	521
V-7	Wastewater Sources at Plant G	522
V-8	Wastewater Sources at Plant H	523
V-9	Wastewater Sources at Plant J	524
V-10	Wastewater Sources at Plant K	525
V-11	Wastewater Sources at Plant L	526
V-12	Wastewater Sources at Plant N	527
V-13	Wastewater Sources at Plant P	528
V-14	Wastewater Sources at Plant Q	529
V-15	Wastewater Sources at Plant R	530
V-16	Wastewater Sources at Plant S	531
V-17	Wastewater Sources at Plant T	532
V-18	Wastewater Sources at Plant U	533
V-19	Wastewater Sources at Plant V	534
V-20	Wastewater Sources at Plant W	535
V-21	Wastewater Sources at Plant AA	536
V-22	Wastewater Sources at Plant BB	537
V-23	Wastewater Sources at Plant CC	538
V-24	Wastewater Sources at Plant DD	539
V-25	Wastewater Sources at Plant EE	540
VII-1	Comparative Solubilities of Metal Hydroxides and Sulfide as a Function of pH	815
VII-2	Lead Solubility in Three Alkalies	816
VII-3	Effluent Zinc Concentration vs. Minimum Effluent pH	817
VII-4	Hydroxide Precipitation Sedimentation Effectiveness -Cadmium	818

FIGURES (Continued)

Section	Title	Page
VII-5	Hydroxide Precipitation Sedimentation Effectiveness - Chromium	819
VII-6	Hydroxide Precipitation Sedimentation Effectiveness - Copper	820
VII-7	Hydroxide Precipitation Sedimentation Effectiveness - Lead	821
VII-8	Hydroxide Precipitation Sedimentation Effectiveness - Nickel and Aluminum	822
VII-9	Hydroxide Precipitation Sedimentation Effectiveness - Zinc	823
VII-10	Hydroxide Precipitation Sedimentation Effectiveness - Iron	824
VII-11	Hydroxide Precipitation Sedimentation Effectiveness - Manganese	825
VII-12	Hydroxide Precipitation Sedimentation Effectiveness - TSS	826
VII-13	Hexavalent Chromium Reduction with Sulfur Dioxide	827
VII-14	Granular Bed Filtration	828
VII-15	Pressure Filtration	829
VII-16	Representative Types of Sedimentation	830
VII-17	Activated Carbon Adsorption Column	831
VII-18	Centrifugation	832
VII-19	Treatment of Cyanide Waste by Alkaline Chlorination	833
VII-20	Typical Ozone Plant for Waste Treatment	834
VII-21	UV/Ozonation	835
VII-22	Types of Evaporation Equipment	836
VII-23	Dissolved Air Flotation	837
VII-24	Gravity Thickening	838
VII-25	Ion Exchange with Regeneration	839
VII-26	Simplified Reverse Osmosis Schematic	840
VII-27	Reverse Osmosis Membrane Configurations	841
VII-28	Sludge Drying Bed	842
VII-29	Simplified Ultrafiltration Flow Schematic	843
VII-30	Vacuum Filtration	844
VII-31	Flow Diagram for Emulsion Breaking with Chemicals	845
VII-32	Filter Configurations	846
VII-33	Gravity Oil-Water Separation	847
VII-34	Flow Diagram for a Batch Treatment Ultrafiltration System	848
VII-35	Flow Diagram of Activated Carbon Adsorption with Regeneration	849
VII-36	Flow Diagram for Recycling with a Cooling Tower	850
VII-37	Counter Current Rinsing (Tanks)	851
VII-38	Effect of Added Rinse Stages on Water Use	852

FIGURES (Continued)

Section	Title	Page
VII-39	Schematic Diagram of Spinning Nozzle Aluminum Refining Process	853
VIII-1	Costs of Oil Skimming (Pre-Proposal)	928
VIII-2	Costs of Chemical Emulsion Breaking (Pre-Proposal)	929
VIII-3	Costs of Dissolved Air Flotation (Pre-Proposal)	930
VIII-4	Costs of Thermal Emulsion Breaking (Pre-Proposal)	931
VIII-5	Costs of Multimedia Filtration (Pre-Proposal)	932
VIII-6	Costs of pH Adjustment with Acid (Pre-Proposal)	933
VIII-7	Costs of pH Adjustment with Caustic (Pre-Proposal)	934
VIII-8	Costs of Lime and Settle (Pre-Proposal)	935
VIII-9	Costs of Chromium Reduction (Pre-Proposal)	936
VIII-10	Costs of Cyanide Oxidation (Pre-Proposal)	937
VIII-11	Costs of Activated Carbon Adsorption (Pre-Proposal)	938
VIII-12	Costs of Vacuum Filtration (Pre-Proposal)	939
VIII-13	Costs of Contract Hauling (Pre-Proposal)	940
VIII-14	Costs of Flow Equalization (Pre-Proposal)	941
VIII-15	Costs of Pumping (Pre-Proposal)	942
VIII-16	Costs of Holding Tanks (Pre-Proposal)	943
VIII-17	Costs of Recycling (Pre-Proposal)	944
VIII-18	General Logic Diagram of Computer Cost Model	945
VIII-19	Logic Diagram of Module Design Procedure	946
VIII-20	Logic Diagram of the Costing Routine	947
VIII-21	Costs of Chemical Precipitation and Gravity Settling (Post-Proposal)	948
VIII-22	Costs of Vacuum Filtration (Post-Proposal)	949
VIII-23	Costs of Flow Equalization (Post-Proposal)	950
VIII-24	Costs of Cartridge/Multimedia Filtration (Post-Proposal)	951
VIII-25	Costs of Chemical Emulsion Breaking (Post-Proposal)	952
VIII-26	Costs of Oil Skimming (Post-Proposal)	953
VIII-27	Costs of Chromium Reduction (Post-Proposal)	954
VIII-28	Costs of Recycling via Cooling Towers/Holding Tanks (Post-Proposal)	955
VIII-29	Cost of Countercurrent Cascade Rinsing (Post-Proposal)	956
VIII-30	Costs of Contract Hauling (Post-Proposal)	957
IX-1	BPT Treatment Train for the Rolling with Neat Oils	

FIGURES (Continued)

Section	Title	Page
	Subcategory	1043
IX-2	BPT Treatment Train for the Rolling with Emulsions Subcategory	1044
IX-3	BPT Treatment Train for the Extrusion Subcategory	1045
IX-4	BPT Treatment Train for the Forging Subcategory	1046
IX-5	BPT Treatment Train for the Drawing with Neat Oils Subcategory	1047
IX-6	BPT Treatment Train for the Drawing with Emulsions or Soaps Subcategory	1048
X-1	BAT Treatment Train for Option 1	1141
X-2	BAT Treatment Train for Option 2	1142
X-3	BAT Treatment Train for Option 3	1143
X-4	BAT Treatment Train for Option 4	1144
X-5	BAT Treatment Train for Option 5	1145
X-6	BAT Treatment Train for Option 6	1146

SECTION I

SUMMARY AND CONCLUSIONS

Pursuant to Sections 301, 304, 306, 307, 308, and 501 of the Clean Water Act and the Settlement Agreement in Natural Resources Defense Council v. Train 8 ERC 2120 (D.D.C. 1976) modified 12 ERC 1833 (D.D.C. 1979), modified by orders dated October 26, 1982 and August 2, 1983, EPA has collected and analyzed data for plants in the Aluminum Forming Point Source Category. There are no existing effluent limitations or performance standards for this industry. This document and the administrative record provide the technical basis for promulgating effluent limitations guidelines for existing direct dischargers, pretreatment standards for new and existing indirect dischargers, and standards of performance for new source direct dischargers.

Summary of the Category

Two hundred seventy-one plants employing approximately 31,200 people comprise this category. Of the 271 plants, 59 discharge directly to rivers, lakes, or streams; 72 discharge to publicly owned treatment works (POTW); and 140 do not discharge process wastewater. Most of the zero discharge plants employ a combination of forming and ancillary operations which do not generate process wastewater. The aluminum forming category has a total production estimated at 5,000,000 kkg (5,500,000 tons) per year, with individual production ranging from less than 10 kkg (22,000 pounds) to more than 259,000 kkg (570 million pounds) per year. Aluminum forming processes are those manufacturing operations in which aluminum or aluminum alloys are shaped into semi-finished or mill products by hot and cold working. These operations, called core operations, include rolling, extruding, forging, and drawing of aluminum. Associated processes, called ancillary operations, are practiced to achieve desired aluminum product characteristics or finishes, and include the casting of aluminum alloys for subsequent forming, heat treatment, and all surface treatment operations performed as an integral part of aluminum forming (called cleaning or etching).

Products manufactured by aluminum forming operations generally serve as stock for subsequent fabricating operations. Cast ingots and billets are the starting point for making sheet and plate, extrusions, and forgings, as well as rod, for use in drawing operations. Rolled aluminum sheet and plate can be used as stock for stampings, can blanks, and roll formed products. Extrusions can be used as raw stock for forging and drawing; to fabricate final products, such as bumpers, window frames, and light standards; or can be sold as final products. Forgings are

either sold as consumer products or as parts in the production of machinery, aircrafts, and engines.

Pollutants found in significant amounts in aluminum forming waste streams include: cadmium, chromium, copper, lead, nickel, selenium, zinc, and aluminum, oil and grease, suspended solids, cyanide, and specific toxic organics.

The Agency developed a data collection portfolio (dcp) to collect information regarding plant size, age, production, the production processes used, the quantity of process wastewater used and discharged, wastewater treatment in-place, and disposal practices at plants practicing aluminum forming. The dcp's were sent to 580 firms known or believed to perform aluminum forming; 95 percent of these firms responded.

EPA sampled the raw (untreated) and treated process wastewater at 25 aluminum forming plants. Screen sampling was performed at four facilities, each representing one of the core processes. Samples were collected from wastewater sources associated with the core processes, as well as any associated processes, including cleaning, etching, solution heat treatment, annealing, and other wastewater streams. Each of the samples was analyzed to determine the presence or absence, and if present, the concentration of 129 toxic priority pollutants, plus conventional and selected nonconventional pollutants. The remaining 21 plants were sampled to verify the findings of the screen sampling effort, to determine flow characteristics of a number of waste streams commonly associated with aluminum forming, and to strengthen the data base.

The Agency examined the rate of production and wastewater generation reported in the dcp's for each aluminum forming operation. These data combined with the wastewater characteristics determined during sampling became the principal bases for subcategorizing this category. Based on these data, the most appropriate approach to subcategorizing this category is by the major manufacturing processes. In addition, a review of the use of lubricants in rolling and drawing showed that these operations needed to be segmented according to whether neat oils or soaps and emulsions are used. A neat oil is a pure oil which when spent of its lubricating properties, can be hauled to an oil reclaimer or used as fuel in the plant. Emulsions and soaps are mixtures of oils and water. When these lubricants are spent, plants can contract haul them to a disposal site, or treat them to remove the oil and discharge or reuse the water. The aluminum forming category is subcategorized based on manufacturing processes and wastewater characteristics, resulting in six subcategories: rolling with neat oils, rolling with emulsions, extrusion, forging, drawing with neat oils, and drawing with emulsions or soaps.

Each subcategory is divided into two segments. The individual core operations listed previously comprise the first segment of each subcategory. The core operations also include operations that may be found in conjunction with the forming process or are present at every facility. Some of the operations included in the core do not discharge wastewater. The effluent flow from the core operations for each of the subcategories is production normalized or related to the mass of aluminum processed through the forming operation, and the limitations at BPT and BAT are based on the production normalized flow and the treatment effectiveness.

The second segment of each subcategory consists of the ancillary operations that generate wastewater and when practiced are an integral part of the aluminum forming process. These ancillary operations, such as solution heat treatment, cleaning or etching, and casting, are practiced to achieve desired characteristics or finishes on the aluminum products and can be characterized by the generation of large volumes of wastewater. Because they are not found at every plant in a subcategory and they are not always unique to a specific subcategory, they are not included in the core. Instead, a separate limitation is proposed for the waste streams generated by these ancillary operations and normalized by the mass of aluminum processed through the ancillary operation. An aluminum forming plant would be permitted to discharge pollutants equivalent to the sum of the limitations established for the core and the ancillary operation(s) practiced at the plant.

Using the subcategories to study the characteristics of the untreated wastewater, EPA identified several distinct control and treatment technologies (both in-plant and end-of-pipe) for use in treating the pollutants found in aluminum forming wastewaters. The following end-of-pipe technologies were selected for study by the Agency:

- Chemical precipitation and sedimentation (lime and settle),
- Oil skimming,
- Chromium reduction,
- Cyanide oxidation or precipitation,
- Multimedia filtration,
- Carbon adsorption,
- Reverse osmosis,

- Chemical emulsion breaking, and

- Thermal emulsion breaking.

EPA also studied various types of in-plant controls reported in the dcp's and observed during sampling. The in-plant controls studied included:

- Recycle of contact cooling water and scrubber liquor,

- Countercurrent cascade rinsing,

- Hauling or regeneration of chemical baths for cleaning or etching,

- Alternative fluxing and degassing methods which do not require wet scrubbing, and

- Recycle of extrusion press hydraulic fluid leakage.

Engineering costs were prepared for each of the treatment options considered for each plant in the category. These costs were then used by the Agency to estimate the impact of implementing the various options on the industry. For each subcategory for each control and treatment option, the number of potential closures, number of employees affected, and impact on price were estimated. These results are reported in the EPA document titled: Economic Impact Analysis of Effluent Limitations and Standards for the Aluminum Forming Industry EPA 440/2-83-010.

Based on consideration of the above factors, EPA identified various control and treatment technologies which formed the basis for BPT and selected control and treatment appropriate for each set of standards and limitations. The mass limitations and standards for BPT, BAT, NSPS, PSES, and PSNS are presented in Section II. The limitations and standards are discussed briefly below.

BPT

In general, the BPT level represents the average of the best existing performances of plants of various ages, sizes, processes or other common characteristics. Where existing performance is uniformly inadequate, BPT may be transferred from a different subcategory or category. In balancing costs in relation to effluent reduction benefits, EPA considers the volume and nature of existing discharges, the volume and nature of discharges expected after application of BPT, the general environmental

effects of the pollutants, and cost and economic impact of the required pollution control level.

EPA is promulgating BPT mass limitations based on model end-of-pipe treatment, which consists of oil skimming and lime precipitation and settling, and, where necessary, preliminary treatment consisting of chemical emulsion breaking, and hexavalent chromium reduction. Cyanide removal, where appropriate, is also included in the model BPT technology. The cyanide limitations are based on the application of cyanide precipitation technology which is transferred from the coil coating category. However, the Agency recommends product substitution as the most effective means of cyanide control.

The pollutants selected for limitation at BPT are: chromium, cyanide, zinc, aluminum, oil and grease, total suspended solids (TSS), and pH.

Fifty-nine plants are direct dischargers. The Agency estimates that investment costs in 1982 dollars for these plants would be $48.4 million and that total annual costs would be $37.9 million. Removal of toxic pollutants over estimates of current removals would be 94,250 kg/yr (207,350 lbs/yr). In addition, BPT will result in the removal of 15.6 million kg/yr (34.3 million lbs/yr) of total pollutants including 1.73 million kg/yr (3.80 million lbs/yr) of the pollutant aluminum. The analysis of economic impact concluded that there are two potential plant closures and 221 job losses associated with compliance with the BPT treatment option. Total loss in industry production is expected to be about 0.1 percent, with the cost of production increasing by about 0.3 percent. If average compliance costs incurred by the plants in the category were passed on to consumers, price increases would range from 0 to 0.7 percent. The Agency has determined that the effluent reduction benefits associated with compliance with BPT limitations justify the costs.

BAT

The BAT technology level represents the best economically achievable performance of plants of various ages, sizes, processes or other shared characteristics. As with BPT, where existing performance is uniformly inadequate, BAT may be transferred from a different subcategory or category. BAT may include feasible process changes or internal controls, even when not common industry practice.

In developing BAT, EPA has given substantial weight to the reasonableness of costs. The Agency considered the volume and nature of discharges, the volume and nature of discharges expected after application of BAT, the general environmental

effects of the pollutants, and the costs and economic impacts of the required pollution control levels. Despite this consideration of costs, the primary determinant of BAT is still effluent reduction capability.

The direct dischargers are expected to move directly to compliance with BAT limitations from existing treatment because the flow reduction used to meet BAT limitations would allow the use of smaller -- and less expensive -- lime and settle equipment than would be used to meet BPT limitations without flow reduction.

The pollutants selected for regulation at BAT are: chromium, cyanide, zinc, and aluminum.

Implementation of the BAT limitations will remove annually an estimated 124,500 kg (273,900 lbs) of toxic metal and organic pollutants (from estimated current discharge) at a capital cost, above equipment in place, of $48.2 million and a total annual cost of $25.1 million ($1982).

BAT will remove 16,000 kg/yr (35,200 lb/yr) of toxic pollutants (metals and organics) and 19,400 kg/yr (42,680 lb/yr) of the pollutant aluminum incrementally above BPT. Total annual costs for BAT are less than BPT because the lower flows allow for smaller equipment and thereby smaller operating and maintenance costs. The Agency projects no additional plant or line closures as a result of these costs. If the average compliance cost incurred by the plants in the industry were passed on to consumers, price increases would range from 0 to 0.8; not significantly greater than the BPT increases. Thus EPA has determined that BAT is economically achievable.

NSPS

NSPS (new source performance standards) are based on the best available demonstrated technology (BDT), including process changes, in-plant control, and end-of-pipe treatment technologies which reduce pollution to the maximum extent feasible.

EPA is establishing the best available demonstrated technology for the aluminum forming category to be equivalent to BAT technology with the addition of filtration prior to discharge. The Agency recognizes that new sources have the opportunity to implement more advanced levels of treatment without incurring the costs of retrofitting equipment, the costs of partial or complete shutdown to install new equipment and the costs to start up and stabilize the treatment system as existing systems would have to do.

Filtration is an appropriate technology for NSPS because it is demonstrated in this category and because compliance with NSPS will be approximately the same as the cost for an existing plant to comply with the BAT limitations. EPA does not believe that NSPS will constitute a barrier to entry for new sources, prevent major modifications to existing sources, or produce other adverse economic effects.

The pollutants selected for regulation are: chromium, cyanide, zinc, aluminum, oil and grease, TSS, and pH.

All of the flow allowances established for NSPS are equivalent to the BAT allowances with the exception of extrusion press hydraulic fluid leakage. The NSPS flow allowance is based on reported flow data from extrusion presses designed and built to allow for the recirculation of the hydraulic fluid leakage.

PSES

PSES (pretreatment standards for existing sources) are designed to prevent the discharge of pollutants which pass through, interfere with, or are otherwise incompatible with the operation of POTW. Pretreatment standards are technology-based and analogous to the best available technology for removal of toxic pollutants. EPA is promulgating PSES based on the application of technology equivalent to BAT, which consists of end-of-pipe treatment comprised of oil skimming and lime precipitation and settling, and preliminary treatment, where necessary, consisting of hexavalent chromium reduction, chemical emulsion breaking, and cyanide removal.

In the aluminum forming category, the Agency has concluded that the toxic metals regulated under these standards (chromium, cyanide, and zinc) pass through the POTW. The nationwide average percentage of these same toxic metals removed by a well operated POTW meeting secondary treatment requirements is about 50 percent (ranging from 20 to 65 percent), whereas the percentage that can be removed by an aluminum forming direct discharger applying the best available technology economically achievable is about 91 percent (ranging from 79 to 97 percent). Accordingly, these pollutants pass through a POTW and are being regulated at PSES.

In addition to pass through of toxic metals, the Agency has determined that there would be pass through of toxic organic pollutants associated with oil waste streams. The PSES technology will remove 97 percent of the toxic organics, whereas the POTW national average removal of these same toxic organics by a well operated POTW meeting secondary treatment requirements is 71 percent. At BAT, the Agency has determined that toxic organics will be adequately controlled by the oil and grease limitation.

Oil and grease standards are not appropriate at PSES and therefore it is necessary to specifically control toxic organics at PSES. Toxic organics are regulated as total toxic organics (TTO) which is all those toxic organics that were found to be present in sampled aluminum forming wastewaters at concentrations greater than the analytical quantification level of 0.01 mg/l.

The analysis of wastewaters for toxic organics is costly and requires sophisticated equipment, therefore the Agency has retained the alternative to monitoring for TTO that was proposed. Data indicate that the toxic organics are much more soluble in oil and grease than in water and that the removal of the oil and grease will substantially remove the toxic organics. Therefore, a monitoring parameter for oil and grease based on the application of oil and grease removal has been provided as an alternative to monitoring for TTO at PSES.

The PSES set forth in this regulation are expressed in terms of mass per unit of production rather than as concentration standards. Regulation on the basis of concentration only is not appropriate because concentration-based standards do not restrict the total quantity of pollutants discharged. Flow reduction is a significant part of the model technology for pretreatment because it results in more concentrated waste streams which further result in more effective pollutant removal. Thus, mass based standards are necessary to reflect the pollutant removal achievable by the model treatment technology.

The pollutants selected for regulation are: chromium, cyanide, zinc, and TTO. Aluminum is not limited because aluminum is commonly used by a POTW as a flocculant to aid in the settling and removal of suspended solids.

Implementation of the PSES will remove annually an estimated 119,500 kg (263,000 lbs) of toxic metal and organic pollutants (from estimated current discharge) at a capital cost, above equipment in place, of $26.1 million and a total annual cost of $16.7 million ($1982). The Agency's estimate of potential plant closures indicates that there are three potential closures associated with PSES. In terms of employment, these potential closures could affect approximately 276 employees. Total loss in industry production is expected to be about 0.2 percent, with the cost of production increasing about 1 percent. Therefore, the Agency has determined that PSES is economically achievable.

The Agency has set the PSES compliance date at three years after promulgation of this regulation.

PSNS

Like PSES, PSNS (pretreatment standards for new sources) are established to prevent the discharge of pollutants which pass-through, interfere with, or are otherwise incompatible with the operation of the POTW. New indirect dischargers, like new direct dischargers, have the opportunity to incorporate the best available demonstrated technologies including process changes, in-plant controls, and end-of-pipe treatment technologies, and to use plant site selection to ensure adequate treatment system installation.

This regulation establishes mass-based PSNS for the aluminum forming category. The treatment technology basis for the PSNS being promulgated is identical to the treatment technology set forth as the basis for the NSPS being promulgated.

The pollutants regulated under PSNS are chromium, cyanide, zinc, and TTO. Aluminum is not limited because aluminum, in its hydroxide form, is commonly used by a POTW as a flocculant to aid in the settling and removal of suspended solids. Monitoring for oil and grease has been established as an alternative to monitoring for TTO as discussed under PSES.

Nonwater Quality Environmental Impacts

Eliminating or reducing one form of pollution may cause other environmental problems. Sections 304(b) and 306 of the Act require EPA to consider the nonwater quality environmental impacts (including energy requirements) of certain regulations. In compliance with these provisions, we considered the effect of this regulation on air pollution, solid waste generation, water scarcity, and energy consumption. This regulation was circulated for review by EPA personnel responsible for nonwater quality programs. While it is difficult to balance pollution problems against each other and against energy use, we believe that this regulation will best serve often competing national goals.

The Agency considered the solid wastes that would be generated at aluminum forming plants by the suggested treatment technologies and believes that except for the sludges generated by the treatment of cyanide, these sludges are not hazardous under Section 3001 of the Resource Conservation and Recovery Act (RCRA). This judgement is made based on the recommended technology of lime precipitation. By the addition of a small excess of lime during treatment, similar sludges, specifically toxic metal bearing sludges generated by other categories such as the iron and steel category, passed the EP toxicity test. See 40 CFR 261.24 (45 FR 33084 (May 19, 1980)).

Only wastewater treatment sludge generated by cyanide precipitation technology is likely to be hazardous under the regulations implementing subtitle C of the Resource Conservation and Recovery Act (RCRA). Under those regulations generators of these wastes must test the wastes to determine if the wastes meet any of the characteristics of hazardous waste (see 40 CFR 262.11, 45 FR 33142-33143, May 19, 1980). Wastewater sludge generated by cyanide precipitation treatment of aluminum forming solution heat treatment contact cooling water may contain cyanides and may exhibit extraction procedure (EP) toxicity. Therefore, these wastes may require disposal as a hazardous waste. Wastewater treatment sludge from cyanide precipitation of a process waste stream is generated separately from lime and settle sludge and may be disposed of separately.

Treatment and control technologies that require extensive recycling and reuse of water may require cooling mechanisms. Evaporative cooling mechanisms can cause water loss and contribute to water scarcity problems--a primary concern in arid and semi-arid regions. While this regulation assumes water reuse, the overall amount of reuse through evaporative cooling mechanisms is low and the quantity of water involved is not significant. In addition, most aluminum forming plants are located east of the Mississippi where water scarcity is not a problem. We conclude that the consumptive water loss is insignificant and that the pollution reduction benefits of recycle technologies outweigh their impact on consumptive water loss.

EPA estimates that the achievement of BPT effluent limitations will result in a net increase in electrical energy consumption of approximately 65 million kilowatt-hours per year. The BAT effluent technology should not substantially increase the energy requirements of BPT because reducing the flow reduces the pumping requirements, the agitation requirement for mixing wastewater, and other volume-related energy requirements. Therefore, the BAT limitations are assumed to require an equivalent energy consumption to that of the BPT limitations. To achieve the BPT and BAT effluent limitations, a typical direct discharger will increase total energy consumption by less than one percent of the energy consumed for production purposes.

The Agency estimates that PSES will result in a net increase in electrical energy consumption of approximately 50 million kilowatt-hours per year. To achieve PSES, a typical existing indirect discharger will increase energy consumption by less than one percent of the total energy consumed for production purposes.

NSPS and PSNS will not significantly add to total energy consumption of the industry. A normal plant for each subcategory was used to estimate the energy requirements for new sources. A new

source wastewater treatment system will add approximately one million kilowatt-hours per year to the total industry energy requirements.

SECTION II

RECOMMENDATIONS

1. EPA has divided the aluminum forming category into six subcategories for the purpose of effluent limitations and standards. These subcategories are:

- Rolling With Neat Oils
- Rolling With Emulsions
- Extrusion
- Forging
- Drawing With Neat Oils
- Drawing With Emulsions or Soaps

Each subcategory is regulated by core and ancillary operations. The core is composed of those operations that always occur with the subcategory or are dry operations. Operations not included in the core are classified as ancillary operations and may or may not be present at any one facility.

2. BPT is being promulgated based on the model treatment technology of flow equalization, oil skimming, and chemical precipitation and sedimentation (lime and settle) technology, and where appropriate, chemical emulsion breaking, chromium reduction, and cyanide removal. The following BPT effluent limitations are being promulgated for existing sources:

A. BPT MASS LIMITATIONS FOR THE ROLLING WITH NEAT OILS SUBCATEGORY

(a) Rolling with Neat Oils - Core Waste Streams Without An Annealing Furnace Scrubber

Pollutant or Pollutant Property	Maximum for Any One Day	Maximum for Monthly Average
mg/off-kg (lb/million off-lbs) of aluminum rolled with neat oils		
Chromium	0.0244	0.010
Cyanide	0.0161	0.0067
Zinc	0.0808	0.0338
Aluminum	0.356	0.174
Oil & Grease	1.11	0.664
Total Suspended Solids	2.27	1.079
pH	(1)	(1)

(1) Within the range of 7.0 to 10.0 at all times.

(b) Rolling With Neat Oils - Core Waste Streams With An Annealing Furnace Scrubber

Pollutant or Pollutant Property	Maximum for Any One Day	Maximum for Monthly Average
mg/off-kg (lb/million off-lbs) of aluminum rolled with neat oils		
Chromium	0.0360	0.0147
Cyanide	0.0237	0.0098
Zinc	0.119	0.0498
Aluminum	0.525	0.257
Oil & Grease	1.634	0.980
Total Suspended Solids	3.348	1.593
pH	(1)	(1)

(1) Within the range of 7.0 to 10.0 at all times.

(c) Continuous Sheet Casting - Spent Lubricant

Pollutant or Pollutant Property	Maximum for Any One Day	Maximum for Monthly Average
mg/off-kg (lb/million off-lbs) of aluminum cast by continuous methods		
Chromium	0.00086	0.00035
Cyanide	0.00057	0.00024
Zinc	0.0029	0.0012
Aluminum	0.0127	0.0063
Oil & Grease	0.0393	0.0236
Total Suspended Solids	0.0805	0.0383
pH	(1)	(1)

(1) Within the range of 7.0 to 10.0 at all times.

(d) Solution Heat Treatment - Contact Cooling Water

Pollutant or Pollutant Property	Maximum for Any One Day	Maximum for Monthly Average
mg/off-kg (lb/million off-lbs) of aluminum quenched		
Chromium	3.39	1.39
Cyanide	2.24	0.93
Zinc	11.25	4.70
Aluminum	49.55	24.66
Oil & Grease	154.10	92.46
Total Suspended Solids	315.91	150.25
pH	(1)	(1)

(1) Within the range of 7.0 to 10.0 at all times.

(e) Cleaning or Etching - Bath

Pollutant or Pollutant Property	Maximum for Any One Day	Maximum for Monthly Average
mg/off-kg (lb/million off-lbs) of aluminum cleaned or etched		
Chromium	0.079	0.032
Cyanide	0.052	0.022
Zinc	0.262	0.110
Aluminum	1.15	0.573
Oil & Grease	3.58	2.15
Total Suspended Solids	7.34	3.49
pH	(1)	(1)

(1) Within the range of 7.0 to 10.0 at all times.

(f) Cleaning or Etching - Rinse

Pollutant or Pollutant Property	Maximum for Any One Day	Maximum for Monthly Average
mg/off-kg (lb/million off-lbs) of aluminum cleaned or etched		
Chromium	6.12	2.51
Cyanide	4.04	1.67
Zinc	20.31	8.49
Aluminum	89.46	44.52
Oil & Grease	278.24	166.95
Total Suspended Solids	570.39	271.29
pH	(1)	(1)

(1) Within the range of 7.0 to 10.0 at all times.

(g) Cleaning or Etching - Scrubber Liquor

Pollutant or Pollutant Property	Maximum for Any One Day	Maximum for Monthly Average
mg/off-kg (lb/million off-lbs) of aluminum cleaned or etched		
Chromium	7.00	2.86
Cyanide	4.61	1.91
Zinc	23.22	9.70
Aluminum	102.24	50.88
Oil & Grease	318.00	190.80
Total Suspended Solids	651.90	310.05
pH	(1)	(1)

(a) Within the range of 7.0 to 10.0 at all times.

B. BPT MASS LIMITATIONS FOR THE ROLLING WITH EMULSIONS SUBCATEGORY

(a) Rolling With Emulsions - Core Waste Streams

Pollutant or Pollutant Property	Maximum for Any One Day	Maximum for Monthly Average
mg/off-kg (lb/million off-lbs) of aluminum rolled with emulsions		
Chromium	0.057	0.024
Cyanide	0.038	0.016
Zinc	0.19	0.079
Aluminum	0.84	0.416
Oil & Grease	2.60	1.56
Total Suspended Solids	5.33	2.53
pH	(1)	(1)

(1) Within the range of 7.0 to 10.0 at all times.

(b) Direct Chill Casting - Contact Cooling Water

Pollutant or Pollutant Property	Maximum for Any One Day	Maximum for Monthly Average
mg/off-kg (lb/million off-lbs) of aluminum cast by direct chill methods		
Chromium	0.59	0.24
Cyanide	0.39	0.16
Zinc	1.94	0.81
Aluminum	8.55	4.26
Oil & Grease	26.58	15.95
Total Suspended Solids	54.49	25.92
pH	(1)	(1)

(1) Within the range of 7.0 to 10.0 at all times.

(c) Solution Heat Treatment - Contact Cooling Water

Pollutant or Pollutant Property	Maximum for Any One Day	Maximum for Monthly Average
mg/off-kg (lb/million off-lbs) of aluminum quenched		
Chromium	3.39	1.39
Cyanide	2.24	0.93
Zinc	11.25	4.70
Aluminum	49.55	24.66
Oil & Grease	154.10	92.46
Total Suspended Solids	315.91	150.25
pH	(1)	(1)

(1) Within the range of 7.0 to 10.0 at all times.

(d) Cleaning or Etching - Bath

Pollutant or Pollutant Property	Maximum for Any One Day	Maximum for Monthly Average
mg/off-kg (lb/million off-lbs) of aluminum cleaned or etched		
Chromium	0.079	0.032
Cyanide	0.052	0.022
Zinc	0.262	0.109
Aluminum	1.15	0.573
Oil & Grease	3.58	2.15
Total Suspended Solids	7.34	3.49
pH	(1)	(1)

(1) Within the range of 7.0 to 10.0 at all times.

(e) Cleaning or Etching - Rinse

Pollutant or Pollutant Property	Maximum for Any One Day	Maximum for Monthly Average
mg/off-kg (lb/million off-lbs) of aluminum cleaned or etched		
Chromium	6.12	2.51
Cyanide	4.04	1.67
Zinc	20.31	8.49
Aluminum	89.46	44.52
Oil & Grease	278.24	166.95
Total Suspended Solids	570.39	271.29
pH	(1)	(1)

(1) Within the range of 7.0 to 10.0 at all times.

(f) Cleaning or Etching - Scrubber Liquor

Pollutant or Pollutant Property	Maximum for Any One Day	Maximum for Monthly Average
mg/off-kg (lb/million off-lbs) of aluminum cleaned or etched		
Chromium	7.00	2.86
Cyanide	4.61	1.91
Zinc	23.22	9.70
Aluminum	102.24	50.88
Oil & Grease	318.00	190.80
Total Suspended Solids	651.90	310.05
pH	(1)	(1)

(1) Within the range of 7.0 to 10.0 at all times.

C. BPT MASS LIMITATIONS FOR THE EXTRUSION SUBCATEGORY

(a) Extrusion - Core Waste Streams

Pollutant or Pollutant Property	Maximum for Any One Day	Maximum for Monthly Average
mg/off-kg (lb/million off-lbs) of aluminum extruded		
Chromium	0.16	0.066
Cyanide	0.11	0.044
Zinc	0.53	0.22
Aluminum	2.34	1.16
Oil & Grease	7.32	4.39
Total Suspended Solids	15.0	7.13
pH	(1)	(1)

(a) Within the range of 7.0 to 10.0 at all times.

(b) Direct Chill Casting - Contact Cooling Water

Pollutant or Pollutant Property	Maximum for Any One Day	Maximum for Monthly Average
mg/off-kg (lb/million off-lbs) of aluminum cast by direct chill methods		
Chromium	0.59	0.24
Cyanide	0.39	0.16
Zinc	1.94	0.81
Aluminum	8.55	4.26
Oil & Grease	26.58	15.95
Total Suspended Solids	60.60	25.92
pH	(1)	(1)

(1) Within the range of 7.0 to 10.0 at all times.

(c) Solution and Press Heat Treatment - Contact Cooling Water

Pollutant or Pollutant Property	Maximum for Any One Day	Maximum for Monthly Average
mg/off-kg (lb/million off-lbs) of aluminum quenched		
Chromium	3.39	1.39
Cyanide	2.24	0.93
Zinc	11.25	4.70
Aluminum	49.55	24.66
Oil & Grease	154.10	92.46
Total Suspended Solids	315.91	150.25
pH	(1)	(1)

(1) Within the range of 7.0 to 10.0 at all times.

(d) Cleaning or Etching - Bath

Pollutant or Pollutant Property	Maximum for Any One Day	Maximum for Monthly Average
mg/off-kg (lb/million off-lbs) of aluminum cleaned or etched		
Chromium	0.079	0.032
Cyanide	0.052	0.022
Zinc	0.26	0.109
Aluminum	1.15	0.573
Oil & Grease	3.58	2.15
Total Suspended Solids	7.34	3.49
pH	(1)	(1)

(1) Within the range of 7.0 to 10.0 at all times.

(e) Cleaning or Etching - Rinse

Pollutant or Pollutant Property	Maximum for Any One Day	Maximum for Monthly Average
mg/off-kg (lb/million off-lbs) of aluminum cleaned or etched		
Chromium	6.12	2.51
Cyanide	4.04	1.67
Zinc	20.31	8.49
Aluminum	89.46	44.52
Oil & Grease	278.24	166.95
Total Suspended Solids	570.39	271.29
pH	(1)	(1)

(1) Within the range of 7.0 to 10.0 at all times.

(f) Cleaning or Etching - Scrubber Liquor

Pollutant or Pollutant Property	Maximum for Any One Day	Maximum for Monthly Average
mg/off-kg (lb/million off-lbs) of aluminum cleaned or etched		
Chromium	7.00	2.86
Cyanide	4.61	1.91
Zinc	23.22	9.70
Aluminum	102.24	50.88
Oil & Grease	318.00	190.80
Total Suspended Solids	651.90	310.05
pH	(1)	(1)

(1) Within the range of 7.0 to 10.0 at all times.

(g) Degassing - Scrubber Liquor

Pollutant or Pollutant Property	Maximum for Any One Day	Maximum for Monthly Average
mg/off-kg (lb/million off-lbs) of aluminum degassed		
Chromium	1.15	0.47
Cyanide	0.76	0.32
Zinc	3.81	1.59
Aluminum	16.78	8.35
Oil & Grease	52.18	31.31
Total Suspended Solids	106.97	50.88
pH	(1)	(1)

(1) Within the range of 7.0 to 10.0 at all times.

(h) Extrusion Press Leakage

Pollutant or Pollutant Property	Maximum for Any One Day	Maximum for Monthly Average
mg/off-kg (lb/million off-lbs) of hard alloy aluminum extruded		
Chromium	0.65	0.27
Cyanide	0.43	0.18
Zinc	2.16	0.90
Aluminum	9.51	4.73
Oil & Grease	29.56	17.74
Total Suspended Solids	60.60	28.82
pH	(1)	(1)

(1) Within the range of 7.0 to 10.0 at all times.

D. BPT MASS LIMITATIONS FOR THE DRAWING WITH NEAT OILS SUBCATEGORY

(a) Drawing With Neat Oils - Core Waste Streams

Pollutant or Pollutant Property	Maximum for Any One Day	Maximum for Monthly Average
mg/off-kg (lb/million off-lbs) of aluminum drawn with neat oils		
Chromium	0.022	0.0090
Cyanide	0.015	0.0050
Zinc	0.073	0.031
Aluminum	0.32	0.160
Oil & Grease	0.97	0.598
Total Suspended Solids	2.04	0.972
pH	(1)	(1)

(1) Within the range of 7.0 to 10.0 at all times.

(b) Continuous Rod Casting - Contact Cooling Water

Pollutant or Pollutant Property	Maximum for Any One Day	Maximum for Monthly Average
mg/off-kg (lb/million off-lbs) of aluminum cast by continuous methods		
Chromium	0.684	0.28
Cyanide	0.451	0.187
Zinc	2.271	0.949
Aluminum	10.00	4.976
Oil & Grease	31.10	18.66
Total Suspended Solids	63.76	30.322
pH	(1)	(1)

(1) Within the range of 7.0 to 10.0 at all times.

(c) Continuous Rod Casting - Spent Lubricant

Pollutant or Pollutant Property	Maximum for Any One Day	Maximum for Monthly Average
mg/off-kg (lb/million off-lbs) of aluminum cast by continuous methods		
Chromium	0.00086	0.00035
Cyanide	0.00057	0.00024
Zinc	0.00287	0.00120
Aluminum	0.01263	0.00628
Oil & Grease	0.03928	0.02357
Total Suspended Solids	0.08052	0.03830
pH	(1)	(1)

(1) Within the range of 7.0 to 10.0 at all times.

(d) Solution Heat Treatment - Contact Cooling Water

Pollutant or Pollutant Property	Maximum for Any One Day	Maximum for Monthly Average
mg/off-kg (lb/million off-lbs) of aluminum quenched		
Chromium	3.39	1.39
Cyanide	2.24	0.93
Zinc	11.25	4.70
Aluminum	49.55	24.66
Oil & Grease	154.10	92.46
Total Suspended Solids	315.91	150.25
pH	(1)	(1)

(1) Within the range of 7.0 to 10.0 at all times.

(e) Cleaning or Etching - Bath

Pollutant or Pollutant Property	Maximum for Any One Day	Maximum for Monthly Average
mg/off-kg (lb/million off-lbs) of aluminum cleaned or etched		
Chromium	0.079	0.032
Cyanide	0.052	0.022
Zinc	0.26	0.11
Aluminum	1.150	0.57
Oil & Grease	3.58	2.15
Total Suspended Solids	7.34	3.49
pH	(1)	(1)

(1) Within the range of 7.0 to 10.0 at all times.

(f) Cleaning or Etching - Rinse

Pollutant or Pollutant Property	Maximum for Any One Day	Maximum for Monthly Average
mg/off-kg (lb/million off-lbs) of aluminum cleaned or etched		
Chromium	6.12	2.51
Cyanide	4.04	1.67
Zinc	20.31	8.49
Aluminum	89.46	44.52
Oil & Grease	278.24	166.95
Total Suspended Solids	570.39	271.29
pH	(1)	(1)

(1) Within the range of 7.0 to 10.0 at all times.

(g) Cleaning or Etching - Scrubber Liquor

Pollutant or Pollutant Property	Maximum for Any One Day	Maximum for Monthly Average
mg/off-kg (lb/million off-lbs) of aluminum cleaned or etched		
Chromium	7.00	2.86
Cyanide	4.61	1.91
Zinc	23.22	9.70
Aluminum	102.24	50.88
Oil & Grease	318.00	198.80
Total Suspended Solids	651.90	310.05
pH	(1)	(1)

(1) Within the range of 7.0 to 10.0 at all times.

E. BPT MASS LIMITATIONS FOR THE DRAWING WITH EMULSIONS OR SOAPS SUBCATEGORY

(a) Drawing With Emulsions or Soaps - Core Waste Streans

Pollutant or Pollutant Property	Maximum for Any One Day	Maximum for Monthly Average
mg/off-kg (lb/million off-lbs) of aluminum drawn with emulsions or soaps		
Chromium	0.205	0.084
Cyanide	0.135	0.056
Zinc	0.680	0.285
Aluminum	3.00	1.50
Oil & Grease	9.33	5.60
Total Suspended Solids	19.12	9.10
pH	(1)	(1)

(1) Within the range of 7.0 to 10.0 at all times.

(b) Continuous Rod Casting - Contact Cooling Water

Pollutant or Pollutant Property	Maximum for Any One Day	Maximum for Monthly Average
mg/off-kg (lb/million off-lbs) of aluminum cast by continuous methods		
Chromium	0.684	0.28
Cyanide	0.450	0.187
Zinc	2.27	0.949
Aluminum	10.00	4.976
Oil & Grease	31.10	18.66
Total Suspended Solids	63.76	30.323
pH	(1)	(1)

(1) Within the range of 7.0 to 10.0 at all times.

(c) Continuous Rod Casting - Spent Lubricant

Pollutant or Pollutant Property	Maximum for Any One Day	Maximum for Monthly Average
mg/off-kg (lb/million off-lbs) of aluminum cast by continuous methods		
Chromium	0.0009	0.0004
Cyanide	0.0006	0.0003
Zinc	0.0029	0.001
Aluminum	0.013	0.006
Oil & Grease	0.040	0.024
Total Suspended Solids	0.081	0.039
pH	(1)	(1)

(1) Within the range of 7.0 to 10.0 at all times.

(d) Solution Heat Treatment - Contact Cooling Water

Pollutant or Pollutant Property	Maximum for Any One Day	Maximum for Monthly Average
mg/off-kg (lb/million off-lbs) of aluminum quenched		
Chromium	3.39	1.39
Cyanide	2.24	0.93
Zinc	11.25	4.70
Aluminum	49.55	24.66
Oil & Grease	154.10	92.46
Total Suspended Solids	315.91	150.25
pH	(1)	(1)

(1) Within the range of 7.0 to 10.0 at all times.

(e) Cleaning or Etching - Bath

Pollutant or Pollutant Property	Maximum for Any One Day	Maximum for Monthly Average
mg/off-kg (lb/million off-lbs) of aluminum cleaned or etched		
Chromium	0.079	0.032
Cyanide	0.052	0.022
Zinc	0.262	0.109
Aluminum	1.15	0.573
Oil & Grease	3.58	2.15
Total Suspended Solids	7.34	3.49
pH	(1)	(1)

(1) Within the range of 7.0 to 10.0 at all times.

(f) Cleaning or Etching - Rinse

Pollutant or Pollutant Property	Maximum for Any One Day	Maximum for Monthly Average
mg/off-kg (lb/million off-lbs) of aluminum cleaned or etched		
Chromium	6.12	2.51
Cyanide	4.04	1.67
Zinc	20.31	8.49
Aluminum	89.46	44.519
Oil & Grease	278.24	166.95
Total Suspended Solids	570.39	271.29
pH	(1)	(1)

(1) Within the range of 7.0 to 10.0 at all times.

(g) Cleaning or Etching - Scrubber Liquor

Pollutant or Pollutant Property	Maximum for Any One Day	Maximum for Monthly Average
mg/off-kg (lb/million off-lbs) of aluminim cleaned or etched		
Chromium	7.00	2.86
Cyanide	4.61	1.91
Zinc	23.22	9.70
Aluminum	102.24	50.88
Oil & Grease	318.00	190.80
Total Suspended Solids	651.90	310.05
pH	(1)	(1)

(1) Within the range of 7.0 to 10.0 at all times.

3. BAT is being promulgated based on the model treatment technology of oil skimming, chemical precipitation, and sedimentation (lime and settle) technology and in-process flow reduction control methods, and where applicable, chemical emulsion breaking, chromium reduction, and cyanide removal. The following BAT effluent limitations are being promulgated for existing sources:

A. BAT MASS LIMITATIONS FOR THE ROLLING WITH NEAT OILS SUBCATEGORY

(a) Rolling With Neat Oils - Core Waste Streams Without An Annealing Furnace Scrubber

Pollutant or Pollutant Property	Maximum for Any One Day	Maximum for Monthly Average
mg/off-kg (lb/million off-lbs) of aluminum rolled with neat oils		
Chromium	0.025	0.010
Cyanide	0.016	0.0067
Zinc	0.081	0.034
Aluminum	0.356	0.174

(b) Rolling With Neat Oils - Core Waste Streams With An Annealing Furnace Scrubber

Pollutant or Pollutant Property	Maximum for Any One Day	Maximum for Monthly Average
mg/off-kg (lb/million off-lbs) of aluminum rolled with neat oils		
Chromium	0.036	0.015
Cyanide	0.024	0.0098
Zinc	0.119	0.050
Aluminum	0.525	0.257

(c) Continuous Sheet Casting - Spent Lubricant

Pollutant or Pollutant Property	Maximum for Any One Day	Maximum for Monthly Average
mg/off-kg (lb/million off-lbs) of aluminum cast by continuous methods		
Chromium	0.00086	0.00035
Cyanide	0.00057	0.00024
Zinc	0.00287	0.0012
Aluminum	0.0127	0.0062

(d) Solution Heat Treatment - Contact Cooling Water

Pollutant or Pollutant Property	Maximum for Any One Day	Maximum for Monthly Average
mg/off-kg (lb/million off-lbs) of aluminum quenched		
Chromium	0.897	0.367
Cyanide	0.591	0.245
Zinc	2.974	1.243
Aluminum	13.10	6.518

(e) Cleaning or Etching - Bath

Pollutant or Pollutant Property	Maximum for Any One Day	Maximum for Monthly Average
mg/off-kg (lb/million off-lbs) of aluminum cleaned or etched		
Chromium	0.079	0.032
Cyanide	0.052	0.022
Zinc	0.262	0.109
Aluminum	1.151	0.573

(f) Cleaning or Etching - Rinse

Pollutant or Pollutant Property	Maximum for Any One Day	Maximum for Monthly Average
mg/off-kg (lb/million off-lbs) of aluminum cleaned or etched		
Chromium	0.612	0.251
Cyanide	0.404	0.167
Zinc	2.031	0.849
Aluminum	8.944	4.45

(g) Cleaning or Etching - Scrubber Liquor

Pollutant or Pollutant Property	Maximum for Any One Day	Maximum for Monthly Average
mg/off-kg (lb/million off-lbs) of aluminum cleaned or etched		
Chromium	0.851	0.348
Cyanide	0.561	0.232
Zinc	2.822	1.179
Aluminum	12.43	6.186

B. BAT MASS LIMITATIONS FOR THE ROLLING WITH EMULSIONS SUBCATEGORY

(a) Rolling With Emulsions - Core Waste Streams

Pollutant or Pollutant Property	Maximum for Any One Day	Maximum for Monthly Average
mg/off-kg (lb/million off-lbs) of aluminum rolled with emulsions		
Chromium	0.057	0.024
Cyanide	0.038	0.016
Zinc	0.19	0.079
Aluminum	0.84	0.42

(b) Direct Chill Casting - Contact Cooling Water

Pollutant or Pollutant Property	Maximum for Any One Day	Maximum for Monthly Average
mg/off-kg (lb/million off-lbs) of aluminum cast by direct chill methods		
Chromium	0.59	0.24
Cyanide	0.39	0.16
Zinc	1.94	0.81
Aluminum	8.55	4.26

(c) Solution Heat Treatment - Contact Cooling Water

Pollutant or Pollutant Property	Maximum for Any One Day	Maximum for Monthly Average
mg/off-kg (lb/million off-lbs) of aluminum quenched		
Chromium	0.90	0.37
Cyanide	0.59	0.25
Zinc	2.98	1.25
Aluminum	13.10	6.52

(d) Cleaning or Etching - Bath

Pollutant or Pollutant Property	Maximum for Any One Day	Maximum for Monthly Average
mg/off-kg (lb/million off-lbs) of aluminum cleaned or etched		
Chromium	0.079	0.032
Cyanide	0.052	0.022
Zinc	0.26	0.109
Aluminum	1.15	0.573

(e) Cleaning or Etching - Rinse

Pollutant or Pollutant Property	Maximum for Any One Day	Maximum for Monthly Average
mg/off-kg (lb/million off-lbs) of aluminum cleaned or etched		
Chromium	0.61	0.25
Cyanide	0.41	0.17
Zinc	2.03	0.85
Aluminum	8.95	4.45

(f) Cleaning or Etching - Scrubber Liquor

Pollutant or Pollutant Property	Maximum for Any One Day	Maximum for Monthly Average
mg/off-kg (lb/million off-lbs) of aluminum cleaned or etched		
Chromium	0.85	0.35
Cyanide	0.56	0.23
Zinc	2.82	1.18
Aluminum	12.43	6.19

C. BAT MASS LIMITATIONS FOR THE EXTRUSION SUBCATEGORY

(a) Extrusion - Core Waste Streams

Pollutant or Pollutant Property	Maximum for Any One Day	Maximum for Monthly Average
mg/off-kg (lb/million off-lbs) of aluminum extruded		
119 Chromium	0.15	0.061
121 Cyanide	0.098	0.041
128 Zinc	0.49	0.21
Aluminum	2.19	1.09

(b) Direct Chill Casting - Contact Cooling Water

Pollutant or Pollutant Property	Maximum for Any One Day	Maximum for Monthly Average
mg/off-kg (lb/million off-lbs) of aluminum cast by direct chill methods		
Chromium	0.59	0.24
Cyanide	0.39	0.16
Zinc	1.94	0.81
Aluminum	8.55	4.26

(c) Solution or Press Heat Treatment Contact Cooling

Pollutant or Pollutant Property	Maximum for Any One Day	Maximum for Monthly Average
mg/off-kg (lb/million off-lbs) of aluminum quenched		
Chromium	0.90	0.37
Cyanide	0.59	0.25
Zinc	2.98	1.25
Aluminum	13.10	6.52

(d) Cleaning or Etching - Bath

Pollutant or Pollutant Property	Maximum for Any One Day	Maximum for Monthly Average
mg/off-kg (lb/million off-lbs) of aluminum cleaned or etched		
Chromium	0.079	0.032
Cyanide	0.052	0.022
Zinc	0.262	0.109
Aluminum	1.15	0.58

(e) Cleaning or Etching - Rinse

Pollutant or Pollutant Property	Maximum for Any One Day	Maximum for Monthly Average
mg/off-kg (lb/million off-lbs) of aluminum cleaned or etched		
Chromium	0.61	0.25
Cyanide	0.41	0.17
Zinc	2.03	0.85
Aluminum	8.95	4.45

(f) Cleaning or Etching - Scrubber Liquor

Pollutant or Pollutant Property	Maximum for Any One Day	Maximum for Monthly Average
mg/off-kg (lb/million off-lbs) of aluminum cleaned or etched		
Chromium	0.85	0.35
Cyanide	0.56	0.23
Zinc	2.82	1.18
Aluminum	12.43	6.19

(g) Extrusion Press Leakage

Pollutant or Pollutant Property	Maximum for Any One Day	Maximum for Monthly Average
mg/off-kg (lb/million off-lbs) of hard alloy aluminum extruded		
Chromium	0.65	0.27
Cyanide	0.43	0.18
Zinc	2.16	0.90
Aluminum	9.51	4.73

D. BAT MASS LIMITATIONS FOR THE DRAWING WITH NEAT OILS SUBCATEGORY

(a) Drawing With Neat Oils - Core Waste Streams

Pollutant or Pollutant Property	Maximum for Any One Day	Maximum for Monthly Average
mg/off-kg (lb/million off-lbs) of aluminum drawn with neat oils		
Chromium	0.022	0.009
Cyanide	0.015	0.006
Zinc	0.073	0.031
Aluminum	0.321	0.16

(b) Continuous Rod Casting - Contact Cooling Water

Pollutant or Pollutant Property	Maximum for Any One Day	Maximum for Monthly Average
mg/off-kg (lb/million off-lbs) of aluminum cast by continuous methods		
Chromium	0.086	0.035
Cyanide	0.056	0.024
Zinc	0.283	0.118
Aluminum	1.247	0.621

(c) Continuous Rod Casting - Spent Lubricant

Pollutant or Pollutant Property	Maximum for Any One Day	Maximum for Monthly Average
mg/off-kg (lb/million off-lbs) of aluminum cast by continuous methods		
Chromium	0.00086	0.0004
Cyanide	0.0006	0.0002
Zinc	0.0029	0.0012
Aluminum	0.0127	0.0063

(d) Solution Heat Treatment - Contact Cooling Water

Pollutant or Pollutant Property	Maximum for Any One Day	Maximum for Monthly Average
mg/off-kg (lb/million off-lbs) of aluminum quenched		
Chromium	0.896	0.367
Cyanide	0.591	0.245
Zinc	2.974	1.243
Aluminum	13.10	6.519

(e) Cleaning or Etching - Bath

Pollutant or Pollutant Property	Maximum for Any One Day	Maximum for Monthly Average
mg/off-kg (lb/million off-lbs) of aluminum cleaned or etched		
Chromium	0.079	0.032
Cyanide	0.052	0.022
Zinc	0.262	0.109
Aluminum	1.151	0.563

(f) Cleaning or Etching - Rinse

Pollutant or Pollutant Property	Maximum for Any One Day	Maximum for Monthly Average
mg/off-kg (lb/million off-lbs) of aluminum cleaned or etched		
Chromium	0.612	0.251
Cyanide	0.404	0.167
Zinc	2.031	0.849
Aluminum	8.944	4.451

(g) Cleaning or Etching - Scrubber Liquor

Pollutant or Pollutant Property	Maximum for Any One Day	Maximum for Monthly Average
mg/off-kg (lb/million off-lbs) of aluminum cleaned or etched		
Chromium	0.851	0.348
Cyanide	0.561	0.232
Zinc	2.82	1.179
Aluminum	12.43	6.19

E. BAT MASS LIMITATIONS FOR THE DRAWING WITH EMULSIONS OR SOAPS SUBCATEGORY

(a) Drawing With Emulsions or Soaps - Core Waste Streams

Pollutant or Pollutant Property	Maximum for Any One Day	Maximum for Monthly Average
mg/off-kg (lb/million off-lbs) of aluminum drawn with emulsions or soaps		
Chromium	0.205	0.084
Cyanide	0.135	0.056
Zinc	0.681	0.285
Aluminum	3.00	1.49

(b) Continuous Rod Casting - Contact Cooling Water

Pollutant or Pollutant Property	Maximum for Any One Day	Maximum for Monthly Average
mg/off-kg (lb/million off-lbs) of aluminum cast by continuous methods		
Chromium	0.086	0.035
Cyanide	0.056	0.024
Zinc	0.283	0.118
Aluminum	1.25	0.62

(c) Continuous Rod Casting - Spent Lubricant

Pollutant or Pollutant Property	Maximum for Any One Day	Maximum for Monthly Average
mg/off-kg (lb/million off-lbs) of aluminum cast by continuous methods		
Chromium	0.0009	0.0004
Cyanide	0.0006	0.0003
Zinc	0.0029	0.0012
Aluminum	0.013	0.0063

(d) Solution Heat Treatment - Contact Cooling Water

Pollutant or Pollutant Property	Maximum for Any One Day	Maximum for Monthly Average
mg/off-kg (lb/million off-lbs) of aluminum quenched		
Chromium	0.897	0.37
Cyanide	0.591	0.25
Zinc	2.98	1.24
Aluminum	13.10	6.52

(e) Cleaning or Etching - Bath

Pollutant or Pollutant Property	Maximum for Any One Day	Maximum for Monthly Average
mg/off-kg (lb/million off-lbs) of aluminum cleaned or etched		
Chromium	0.079	0.032
Cyanide	0.052	0.022
Zinc	0.262	0.11
Aluminum	1.15	0.57

(f) Cleaning or Etching - Rinse

Pollutant or Pollutant Property	Maximum for Any One Day	Maximum for Monthly Average
mg/off-kg (lb/million off-lbs) of aluminum cleaned or etched		
Chromium	0.612	0.251
Cyanide	0.404	0.167
Zinc	2.03	0.849
Aluminum	8.95	4.45

(g) Cleaning or Etching - Scrubber Liquor

Pollutant or Pollutant Property	Maximum for Any One Day	Maximum for Monthly Average
mg/off-kg (lb/million off-lbs) of aluminum cleaned or etched		
Chromium	0.85	0.348
Cyanide	0.561	0.232
Zinc	2.82	1.18
Aluminum	12.43	6.19

4. NSPS is being promulgated based on the model treatment technology of oil skimming, chemical precipitation, sedimentation and filtration (lime, settle, and filter) technology and in-process flow reduction control methods, and where applicable, chemical emulsion breaking, chromium reduction, and cyanide removal. The following effluent standards are being promulgated for new sources:

A. NSPS FOR THE ROLLING WITH NEAT OILS SUBCATEGORY

(a) Rolling With Neat Oils - Core Waste Streams Without An Annealing Furnace Scrubber

Pollutant or Pollutant Property	Maximum for Any One Day	Maximum for Monthly Average
mg/off-kg (lb/million off-lbs) of aluminum rolled with neat oils		
Chromium	0.021	0.0083
Cyanide	0.011	0.0044
Zinc	0.057	0.023
Aluminum	0.338	0.150
Oil & Grease	0.553	0.553
Total Suspended Solids	0.830	0.664
pH	(1)	(1)

(1) Within the range of 7.0 to 10.0 at all times.

(b) Rolling With Neat Oils - Core Waste Streams With An Annealing Furnace Scrubber

Pollutant or Pollutant Property	Maximum for Any One Day	Maximum for Monthly Average
mg/off-kg (lb/million off-lbs) of aluminum rolled with neat oils		
Chromium	0.030	0.0123
Cyanide	0.016	0.0065
Zinc	0.084	0.0343
Aluminum	0.499	0.221
Oil & Grease	0.817	0.817
Total Suspended Solids	1.225	0.980
pH	(1)	(1)

(1) Within the range of 7.0 to 10.0 at all times.

(c) Continuous Sheet Casting - Spent Lubricant

Pollutant or Pollutant Property	Maximum for Any One Day	Maximum for Monthly Average
mg/off-kg (lb/million off-lbs) of aluminum cast by continuous methods		
Chromium	0.00073	0.00029
Cyanide	0.00039	0.00016
Zinc	0.0020	0.00082
Aluminum	0.012	0.0053
Oil & Grease	0.0197	0.019
Total Suspended Solids	0.0295	0.022
pH	(1)	(1)

(1) Within the range of 7.0 to 10.0 at all times.

(d) Solution Heat Treatment - Contact Cooling Water

Pollutant or Pollutant Property	Maximum for Any One Day	Maximum for Monthly Average
mg/off-kg (lb/million off-lbs) of aluminum quenched		
Chromium	0.76	0.31
Cyanide	0.41	0.17
Zinc	2.08	0.86
Aluminum	12.45	5.52
Oil & Grease	20.37	20.37
Total Suspended Solids	30.56	24.45
pH	(1)	(1)

(1) Within the range of 7.0 to 10.0 at all times.

(e) Cleaning or Etching - Bath

Pollutant or Pollutant Property	Maximum for Any One Day	Maximum for Monthly Average
mg/off-kg (lb/million off-lbs) of aluminum cleaned or etched		
Chromium	0.066	0.027
Cyanide	0.036	0.015
Zinc	0.183	0.075
Aluminum	1.094	0.485
Oil & Grease	1.79	1.79
Total Suspended Solids	2.69	2.15
pH	(1)	(1)

(1) Within the range of 7.0 to 10.0 at all times.

(f) Cleaning or Etching - Rinse

Pollutant or Pollutant Property	Maximum for Any One Day	Maximum for Monthly Average
mg/off-kg (lb/million off-lbs) of aluminum cleaned or etched		
Chromium	0.52	0.21
Cyanide	0.28	0.11
Zinc	1.42	0.59
Aluminum	8.50	3.70
Oil & Grease	13.91	13.91
Total Suspended Solids	20.87	16.69
pH	(1)	(1)

(1) Within the range of 7.0 to 10.0 at all times.

(g) Cleaning or Etching - Scrubber Liquor

Pollutant or Pollutant Property	Maximum for Any One Day	Maximum for Monthly Average
mg/off-kg (lb/million off-lbs) of aluminum cleaned or etched		
Chromium	0.715	0.29
Cyanide	0.387	0.16
Zinc	1.97	0.81
Aluminum	11.81	5.24
Oil & Grease	19.33	19.33
Total Suspended Solids	29.00	23.20
pH	(1)	(1)

(1) Within the range of 7.0 to 10.0 at all times.

B. NSPS FOR THE ROLLING WITH EMULSIONS SUBCATEGORY

(a) Rolling With Emulsions - Core Waste Streams

Pollutant or Pollutant Property	Maximum for Any One Day	Maximum for Monthly Average
mg/off-kg (lb/million off-lbs) of aluminum rolled with emulsions		
Chromium	0.048	0.020
Cyanide	0.026	0.011
Zinc	0.133	0.055
Aluminum	0.80	0.35
Oil & Grease	1.30	1.30
Total Suspended Solids	1.95	1.56
pH	(1)	(1)

(1) Within the range of 7.0 to 10.0 at all times.

(b) Direct Chill Casting - Contact Cooling Water

Pollutant or Pollutant Property	Maximum for Any One Day	Maximum for Monthly Average
mg/off-kg (lb/million off-lbs) of aluminum cast by direct chill methods		
Chromium	0.49	0.20
Cyanide	0.27	0.11
Zinc	1.36	0.59
Aluminum	8.12	3.60
Oil & Grease	13.29	13.29
Total Suspended Solids	19.94	15.95
pH	(1)	(1)

(1) Within the range of 7.0 to 10.0 at all times.

(c) Solution Heat Treatment - Contact Cooling Water

Pollutant or Pollutant Property	Maximum for Any One Day	Maximum for Monthly Average
mg/off-kg (lb/million off-lbs) of aluminum quenched		
Chromium	0.76	0.31
Cyanide	0.41	0.17
Zinc	2.08	0.86
Aluminum	12.45	5.52
Oil & Grease	20.37	20.37
Total Suspended Solids	30.56	24.45
pH	(1)	(1)

(1) Within the range of 7.0 to 10.0 at all times.

(d) Cleaning or Etching - Bath

Pollutant or Pollutant Property	Maximum for Any One Day	Maximum for Monthly Average
mg/off-kg (lb/million off-lbs) of aluminum cleaned or etched		
Chromium	0.067	0.027
Cyanide	0.036	0.015
Zinc	0.183	0.075
Aluminum	1.094	0.485
Oil & Grease	1.79	1.79
Total Suspended Solids	2.69	2.15
pH	(1)	(1)

(1) Within the range of 7.0 to 10.0 at all times.

(e) Cleaning or Etching - Rinse

Pollutant or Pollutant Property	Maximum for Any One Day	Maximum for Monthly Average
mg/kg (lb/million lbs) of aluminum cleaned or etched		
Chromium	0.52	0.21
Cyanide	0.28	0.11
Zinc	1.42	0.59
Aluminum	8.50	3.77
Oil & Grease	13.91	13.91
Total Suspended Solids	20.87	16.70
pH	(1)	(1)

(1) Within the range of 7.0 to 10.0 at all times.

(f) Cleaning or Etching - Scrubber Liquor

Pollutant or Pollutant Property	Maximum for Any One Day	Maximum for Monthly Average
mg/off-kg (lb/million off-lbs) of aluminum cleaned or etched		
Chromium	0.72	0.29
Cyanide	0.39	0.16
Zinc	1.97	0.81
Aluminum	11.81	5.24
Oil & Grease	19.33	19.33
Total Suspended Solids	29.00	23.20
pH	(1)	(1)

(1) Within the range of 7.0 to 10.0 at all times.

C. NSPS FOR THE EXTRUSION SUBCATEGORY

(a) Extrusion - Core Waste Streams

Pollutant or Pollutant Property	Maximum for Any One Day	Maximum for Monthly Average
mg/off-kg (lb/million off-lbs) of aluminum extruded		
Chromium	0.13	0.051
Cyanide	0.068	0.027
Zinc	0.35	0.14
Aluminum	2.07	0.92
Oil & Grease	3.39	3.39
Total Suspended Solids	5.10	4.07
pH	(1)	(1)

(1) Within the range of 7.0 to 10.0 at all times.

(b) Direct Chill Casting - Contact Cooling Water

Pollutant or Pollutant Property	Maximum for Any One Day	Maximum for Monthly Average
mg/off-kg (lb/million off-lbs) of aluminum cast by direct chill methods		
Chromium	0.49	0.20
Cyanide	0.27	0.11
Zinc	1.36	0.56
Aluminum	8.12	3.60
Oil & Grease	13.29	13.29
Total Suspended Solids	19.24	15.95
pH	(1)	(1)

(1) Within the range of 7.0 to 10.0 at all times.

(c) Solution and Press Heat Treatment - Contact Cooling Water

Pollutant or Pollutant Property	Maximum for Any One Day	Maximum for Monthly Average
mg/off-kg (lb/million off-lbs) of aluminum quenched		
Chromium	0.76	0.31
Cyanide	0.41	0.17
Zinc	2.08	0.86
Aluminum	12.45	5.52
Oil & Grease	20.37	20.37
Total Suspended Solids	30.56	24.45
pH	(1)	(1)

(1) Within the range of 7.0 to 10.0 at all times.

(d) Cleaning or Etching - Bath

Pollutant or Pollutant Property	Maximum for Any One Day	Maximum for Monthly Average
mg/off-kg (lb/million off-lbs) of aluminum cleaned or etched		
Chromium	0.067	0.027
Cyanide	0.036	0.015
Zinc	0.183	0.075
Aluminum	1.094	0.485
Oil & Grease	1.79	1.79
Total Suspended Solids	2.69	2.15
pH	(1)	(1)

(1) Within the range of 7.0 to 10.0 at all times.

(e) Cleaning or Etching - Rinse

Pollutant or Pollutant Property	Maximum for Any One Day	Maximum for Monthly Average
mg/off-kg (lb/million off-lbs) of aluminum cleaned or etched		
Chromium	0.52	0.21
Cyanide	0.28	0.11
Zinc	1.42	0.59
Aluminum	8.50	3.77
Oil & Grease	13.91	13.91
Total Suspended Solids	20.87	16.70
pH	(1)	(1)

(1) Within the range of 7.0 to 10.0 at all times.

(f) Cleaning or Etching - Scrubber Liquor

Pollutant or Pollutant Property	Maximum for Any One Day	Maximum for Monthly Average
mg/off-kg (lb/million off-lbs) of aluminum cleaned or etched		
Chromium	0.72	0.29
Cyanide	0.39	0.16
Zinc	1.97	0.81
Aluminum	11.81	5.24
Oil & Grease	19.33	19.33
Total Suspended Solids	29.00	23.20
pH	(1)	(1)

(1) Within the range of 7.0 to 10.0 at all times.

(g) Extrusion Press Leakage

Pollutant or Pollutant Property	Maximum for Any One Day	Maximum for Monthly Average
mg/off-kg (lb/million off-lbs) of hard alloy aluminum extruded		
Chromium	0.11	0.045
Cyanide	0.060	0.024
Zinc	0.31	0.126
Aluminum	1.82	0.81
Oil & Grease	2.98	2.98
Total Suspended Solids	4.47	3.58
pH	(1)	(1)

(1) Within the range of 7.0 to 10.0 at all times.

D. NSPS FOR THE FORGING SUBCATEGORY

(a) Forging - Core Waste Streams

Pollutant or Pollutant Property	Maximum for Any One Day	Maximum for Monthly Average
mg/off-kg (lb/million off-lbs) of aluminum forged		
Chromium	0.019	0.008
Cyanide	0.010	0.004
Zinc	0.051	0.021
Aluminum	0.305	0.135
Oil & Grease	0.50	0.50
Total Suspended Solids	0.75	0.60
pH	(1)	(1)

(1) Within the range of 7.0 to 10.0 at all times.

(b) Forging - Scrubber Liquor

Pollutant or Pollutant Property	Maximum for Any One Day	Maximum for Monthly Average
mg/off-kg (lb/million off-lbs) of aluminum forged		
Chromium	0.035	0.014
Cyanide	0.019	0.008
Zinc	0.096	0.04
Aluminum	0.576	0.256
Oil & Grease	0.943	0.95
Total Suspended Solids	1.42	1.13
pH	(1)	(1)

(1) Within the range of 7.0 to 10.0 at all times.

(c) Solution Heat Treatment - Contact Cooling Water

Pollutant or Pollutant Property	Maximum for Any One Day	Maximum for Monthly Average
mg/off-kg (lb/million off-lbs) of aluminum quenched		
Chromium	0.76	0.31
Cyanide	0.41	0.163
Zinc	2.08	0.86
Aluminum	12.45	5.52
Oil & Grease	20.37	20.37
Total Suspended Solids	30.56	24.45
pH	(1)	(1)

(1) Within the range of 7.0 to 10.0 at all times.

(d) Cleaning or Etching - Bath

Pollutant or Pollutant Property	Maximum for Any One Day	Maximum for Monthly Average
mg/off-kg (lb/million off-lbs) of aluminum cleaned or etched		
Chromium	0.066	0.027
Cyanide	0.036	0.015
Zinc	0.183	0.075
Aluminum	1.094	0.485
Oil & Grease	1.79	1.79
Total Suspended Solids	2.69	2.15
pH	(1)	(1)

(1) Within the range of 7.0 to 10.0 at all times.

(e) Cleaning or Etching - Rinse

Pollutant or Pollutant Property	Maximum for Any One Day	Maximum for Monthly Average
mg/off-kg (lb/million off-lbs) of aluminum cleaned or etched		
Chromium	0.52	0.21
Cyanide	0.28	0.11
Zinc	1.42	0.59
Aluminum	8.5	3.77
Oil & Grease	13.91	13.91
Total Suspended Solids	20.87	16.69
pH	(1)	(1)

(1) Within the range of 7.0 to 10.0 at all times.

(f) Cleaning or Etching - Scrubber Liquor

Pollutant or Pollutant Property	Maximum for Any One Day	Maximum for Monthly Average
mg/off-kg (lb/million off-lbs) of aluminum cleaned or etched		
Chromium	0.72	0.29
Cyanide	0.39	0.155
Zinc	1.97	0.812
Aluminum	11.81	5.24
Oil & Grease	19.33	19.33
Total Suspended Solids	29.00	23.20
pH	(1)	(1)

(1) Within the range of 7.0 to 10.0 at all times.

E. NSPS FOR THE DRAWING WITH NEAT OILS SUBCATEGORY

(a) Drawing With Neat Oils - Core Waste Streams

Pollutant or Pollutant Property	Maximum for Any One Day	Maximum for Monthly Average
mg/off-kg (lb/million off-lbs) of aluminum drawn with neat oils		
Chromium	0.019	0.008
Cyanide	0.010	0.004
Zinc	0.051	0.021
Aluminum	0.304	0.135
Oil & Grease	0.498	0.498
Total Suspended Solids	0.747	0.598
pH	(1)	(1)

(1) Within the range of 7.0 to 10.0 at all times.

(b) Continuous Rod Casting - Contact Cooling Water

Pollutant or Pollutant Property	Maximum for Any One Day	Maximum for Monthly Average
mg/off-kg (lb/million off-lbs) of aluminum cast by continuous methods		
Chromium	0.072	0.029
Cyanide	0.039	0.016
Zinc	0.198	0.082
Aluminum	1.185	0.526
Oil & Grease	1.939	1.939
Total Suspended Solids	2.909	2.327
pH	(1)	(1)

(1) Within the range of 7.0 to 10.0 at all times.

(c) Continuous Rod Casting - Spent Lubricant

Pollutant or Pollutant Property	Maximum for Any One Day	Maximum for Monthly Average
mg/off-kg (lb/million off-lbs) of aluminum cast by continuous methods		
Chromium	0.0008	0.0003
Cyanide	0.0004	0.0002
Zinc	0.002	0.008
Aluminum	0.012	0.006
Oil & Grease	0.02	0.02
Total Suspended Solids	0.03	0.024
pH	(1)	(1)

(1) Within the range of 7.0 to 10.0 at all times.

(d) Solution Heat Treatment - Contact Cooling Water

Pollutant or Pollutant Property	Maximum for Any One Day	Maximum for Monthly Average
mg/off-kg (lb/million off-lbs) of aluminum quenched		
Chromium	0.754	0.306
Cyanide	0.408	0.163
Zinc	2.08	0.856
Aluminum	12.45	5.52
Oil & Grease	20.37	20.37
Total Suspended Solids	30.56	24.45
pH	(1)	(1)

(1) Within the range of 7.0 to 10.0 at all times.

(e) Cleaning or Etching - Bath

Pollutant or Pollutant Property	Maximum for Any One Day	Maximum for Monthly Average
mg/off-kg (lb/million off-lbs) of aluminum cleaned or etched		
Chromium	0.066	0.027
Cyanide	0.036	0.015
Zinc	0.183	0.075
Aluminum	1.094	0.485
Oil & Grease	1.79	1.79
Total Suspended Solids	2.69	2.15
pH	(1)	(1)

(1) Within the range of 7.0 to 10.0 at all times.

(f) Cleaning or Etching - Rinse

Pollutant or Pollutant Property	Maximum for Any One Day	Maximum for Monthly Average
mg/off-kg (lb/million off-lbs) of aluminum cleaned or etched		
Chromium	0.515	0.209
Cyanide	0.278	0.111
Zinc	1.42	0.584
Aluminum	8.50	3.77
Oil & Grease	13.91	13.91
Total Suspended Solids	20.87	16.70
pH	(1)	(1)

(1) Within the range of 7.0 to 10.0 at all times.

(g) Cleaning or Etching - Scrubber Liquor

Pollutant or Pollutant Property	Maximum for Any One Day	Maximum for Monthly Average
mg/off-kg (lb/million off-lbs) of aluminum cleaned or etched		
Chromium	0.715	0.290
Cyanide	0.387	0.155
Zinc	1.97	0.812
Aluminum	11.81	5.24
Oil & Grease	19.33	19.33
Total Suspended Solids	29.00	23.20
pH		

(1) Within the range of 7.0 to 10.0 at all times.

F. NSPS FOR THE DRAWING WITH EMULSIONS OR SOAPS SUBCATEGORY

(a) Drawing With Emulsions or Soaps - Core Waste Streams

Pollutant or Pollutant Property	Maximum for Any One Day	Maximum for Monthly Average
mg/off-kg (lb/million off-lbs) of aluminum drawn with emulsions or soaps		
Chromium	0.173	0.070
Cyanide	0.094	0.038
Zinc	0.476	0.196
Aluminum	2.85	1.27
Oil & Grease	4.67	4.67
Total Suspended Solids	7.00	5.60
pH	(1)	(1)

(1) Within the range of 7.0 to 10.0 at all times.

(b) Continuous Rod Casting - Contact Cooling Water

Pollutant or Pollutant Property	Maximum for Any One Day	Maximum for Monthly Average
mg/off-kg (lb/million off-lbs) of aluminum cast by continuous methods		
Chromium	0.072	0.029
Cyanide	0.039	0.016
Zinc	0.198	0.081
Aluminum	1.184	0.526
Oil & Grease	1.940	1.940
Total Suspended Solids	2.91	2.33
pH	(1)	(1)

(1) Within the range of 7.0 to 10.0 at all times.

(c) Continuous Rod Casting - Spent Lubricant

Pollutant or Pollutant Property	Maximum for Any One Day	Maximum for Monthly Average
mg/off-kg (lb/million off-lbs) of aluminum cast by continuous methods		
Chromium	0.0008	0.0003
Cyanide	0.0004	0.0002
Zinc	0.0020	0.0008
Aluminum	0.012	0.0053
Oil & Grease	0.020	0.020
Total Suspended Solids	0.030	0.024
pH	(1)	(1)

(1) Within the range of 7.0 to 10.0 at all times.

(d) Solution Heat Treatment - Contact Cooling Water

Pollutant or Pollutant Property	Maximum for Any One Day	Maximum for Monthly Average
mg/off-kg (lb/million off-lbs) of aluminum quenched		
Chromium	0.754	0.31
Cyanide	0.408	0.16
Zinc	2.08	0.86
Aluminum	12.450	5.52
Oil & Grease	20.37	20.37
Total Suspended Solids	20.56	24.45
pH	(1)	(1)

(1) Within the range of 7.0 to 10.0 at all times.

(e) Cleaning or Etching - Bath

Pollutant or Pollutant Property	Maximum for Any One Day	Maximum for Monthly Average
mg/off-kg (lb/million off-lbs) of aluminum cleaned or etched		
Chromium	0.066	0.027
Cyanide	0.036	0.015
Zinc	0.183	0.075
Aluminum	1.094	0.49
Oil & Grease	1.79	1.79
Total Suspended Solids	2.69	2.15
pH	(1)	(1)

(1) Within the range of 7.0 to 10.0 at all times.

(f) Cleaning or Etching - Rinse

Pollutant or Pollutant Property	Maximum for Any One Day	Maximum for Monthly Average
mg/off-kg (lb/million off-lbs) of aluminum cleaned or etched		
Chromium	0.515	0.21
Cyanide	0.278	0.11
Zinc	1.42	0.59
Aluminum	8.50	3.77
Oil & Grease	13.91	13.91
Total Suspended Solids	20.87	16.70
pH	(1)	(1)

(1) Within the range of 7.0 to 10.0 at all times.

(g) Cleaning or Etching - Scrubber Liquor

Pollutant or Pollutant Property	Maximum for Any One Day	Maximum for Monthly Average
mg/off-kg (lb/million off-lbs) of aluminum cleaned or etched		
Chromium	0.72	0.290
Cyanide	0.387	0.155
Zinc	1.97	0.812
Aluminum	1.18	5.24
Oil & Grease	19.33	19.33
Total Suspended Solids	29.00	23.20
pH	(1)	(1)

(1) Within the range of 7.0 to 10.0 at all times.

5. PSES is being promulgated based on the model treatment technology of oil skimming and chemical precipitation and sedimentation (lime and settle) technology and in-process flow reduction control methods, and where applicable, chemical emulsion breaking, chromium reduction, and cyanide removal. The following pretreatment standards are being promulgated for existing sources:

A. PSES FOR THE ROLLING WITH NEAT OILS SUBCATEGORY

(a) Rolling With Neat Oils - Core Waste Streams Without An Annealing Furnace Scrubber

Pollutant or Pollutant Property	Maximum for Any One Day	Maximum for Monthly Average
mg/off-kg (lb/million off-lbs) of aluminum rolled with neat oils		
Chromium	0.025	0.010
Cyanide	0.016	0.007
Zinc	0.081	0.034
Total Toxic Organics (TTO)	0.038	--
Oil & Grease*	1.11	0.67

(b) Rolling With Neat Oils - Core Waste Streams With An Annealing Furnace Scrubber

Pollutant or Pollutant Property	Maximum for Any One Day	Maximum for Monthly Average
mg/off-kg (lb/million off-lbs) of aluminum rolled with neat oils		
Chromium	0.036	0.015
Cyanide	0.024	0.010
Zinc	0.119	0.050
Total Toxic Organics (TTO)	0.057	--
Oil & Grease*	1.64	0.98

(c) Continuous Sheet Casting - Spent Lubricant

Pollutant or Pollutant Property	Maximum for Any One Day	Maximum for Monthly Average
mg/kg (lb/million lbs) of aluminum cast by continuous methods		
Chromium	0.00086	0.00035
Cyanide	0.00057	0.00024
Zinc	0.0029	0.0012
Total Toxic Organics (TTO)	0.0014	--
Oil & Grease*	0.040	0.024

*Alternate monitoring limit - oil and grease may be substituted for TTO.

(d) Solution Heat Treatment - Contact Cooling Water

Pollutant or Pollutant Property	Maximum for Any One Day	Maximum for Monthly Average
mg/off-kg (lb/million off-lbs) of aluminum quenched		
Chromium	0.90	0.37
Cyanide	0.59	0.25
Zinc	2.98	1.25
Total Toxic Organics (TTO)	1.41	--
Oil & Grease*	40.74	24.45

(e) Cleaning or Etching - Bath

Pollutant or Pollutant Property	Maximum for Any One Day	Maximum for Monthly Average
mg/off-kg (lb/million off-lbs) of aluminum cleaned or etched		
Chromium	0.079	0.032
Cyanide	0.052	0.022
Zinc	0.262	0.109
Total Toxic Organics (TTO)	0.124	--
Oil & Grease*	3.58	2.15

(f) Cleaning or Etching - Rinse

Pollutant or Pollutant Property	Maximum for Any One Day	Maximum for Monthly Average
mg/off-kg (lb/million off-lbs) of aluminum cleaned or etched		
Chromium	0.61	0.25
Cyanide	0.41	0.17
Zinc	2.03	0.85
Total Toxic Organics (TTO)	0.96	--
Oil & Grease*	27.82	16.69

*Alternate monitoring limit - oil and grease may be substituted for TTO.

(g) Cleaning or Etching - Scrubber Liquor

Pollutant or Pollutant Property	Maximum for Any One Day	Maximum for Monthly Average
mg/off-kg (lb/million off-lbs) of aluminum cleaned or etched		
Chromium	0.85	0.35
Cyanide	0.56	0.23
Zinc	2.82	1.18
Total Toxic Organics (TTO)	1.34	--
Oil & Grease*	38.7	23.20

B. PSES FOR THE ROLLING WITH EMULSIONS SUBCATEGORY

(a) Rolling With Emulsions - Core Waste Streams

Pollutant or Pollutant Property	Maximum for Any One Day	Maximum for Monthly Average
mg/off-kg (lb/million off-lbs) of aluminum rolled with emulsions		
Chromium	0.057	0.024
Cyanide	0.038	0.016
Zinc	0.190	0.079
Total Toxic Organics (TTO)	0.090	--
Oil & Grease*	2.60	1.56

(b) Direct Chill Casting - Contact Cooling Water

Pollutant or Pollutant Property	Maximum for Any One Day	Maximum for Monthly Average
mg/off-kg (lb/million off-lbs) of aluminum cast by direct chill methods		
Chromium	0.59	0.24
Cyanide	0.39	0.16
Zinc	1.94	0.81
Total Toxic Organics (TTO)	0.92	--
Oil & Grease*	26.58	15.95

*Alternate monitoring limit - oil and grease may be substituted for TTO.

(c) Solution Heat Treatment - Contact Cooling Water

Pollutant or Pollutant Property	Maximum for Any One Day	Maximum for Monthly Average
mg/off-kg (lb/million off-lbs) of aluminum quenched		
Chromium	0.90	0.37
Cyanide	0.56	0.25
Zinc	2.98	1.24
Total Toxic Organics (TTO)	1.41	--
Oil & Grease*	40.74	24.44

(d) Cleaning or Etching - Bath

Pollutant or Pollutant Property	Maximum for Any One Day	Maximum for Monthly Average
mg/off-kg (lb/million off-lbs) of aluminum cleaned or etched		
Chromium	0.079	0.032
Cyanide	0.052	0.022
Zinc	0.262	0.109
Total Toxic Organics (TTO)	0.124	--
Oil & Grease*	3.58	2.15

(e) Cleaning or Etching - Rinse

Pollutant or Pollutant Property	Maximum for Any One Day	Maximum for Monthly Average
mg/off-kg (lb/million lbs) of aluminum cleaned or etched		
Chromium	0.61	0.25
Cyanide	0.41	0.17
Zinc	2.03	0.85
Total Toxic Organics (TTO)	0.96	--
Oil & Grease*	27.82	16.69

*Alternate monitoring limit - oil and grease may be substituted for TTO.

(f) Cleaning or Etching - Scrubber Liquor

Pollutant or Pollutant Property	Maximum for Any One Day	Maximum for Monthly Average
mg/off-kg (lb/million off-lbs) of aluminum cleaned or etched		
Chromium	0.85	0.35
Cyanide	0.56	0.23
Zinc	2.83	1.18
Total Toxic Organics (TTO)	1.34	--
Oil & Grease*	38.66	23.20

C. PSES FOR THE EXTRUSION SUBCATEGORY

(a) Extrusion - Core Waste Streams

Pollutant or Pollutant Property	Maximum for Any One Day	Maximum for Monthly Average
mg/off-kg (lb/million off-lbs) of aluminum extruded		
Chromium	0.15	0.061
Cyanide	0.098	0.041
Zinc	0.49	0.21
Total Toxic Organics (TTO)	0.23	--
Oil & Grease*	6.80	4.07

(b) Direct Chill Casting - Contact Cooling Water

Pollutant or Pollutant Property	Maximum for Any One Day	Maximum for Monthly Average
mg/off-kg (lb/million off-lbs) of aluminum cast by direct chill methods		
Chromium	0.59	0.24
Cyanide	0.39	0.16
Zinc	1.94	0.81
Total Toxic Organics (TTO)	0.92	--
Oil & Grease*	26.58	15.95

*Alternate monitoring limit - oil and grease may be substituted for TTO.

(c) Solution and Press Heat Treatment - Contact Cooling Water

Pollutant or Pollutant Property	Maximum for Any One Day	Maximum for Monthly Average
mg/off-kg (lb/million off-lbs) of aluminum quenched		
Chromium	0.90	0.37
Cyanide	0.59	0.25
Zinc	2.98	1.25
Total Toxic Organics (TTO)	1.41	--
Oil & Grease*	40.74	24.45

(d) Cleaning or Etching - Bath

Pollutant or Pollutant Property	Maximum for Any One Day	Maximum for Monthly Average
mg/off-kg (lb/million off-lbs) of aluminum cleaned or etched		
Chromium	0.079	0.032
Cyanide	0.052	0.022
Zinc	0.26	0.109
Total Toxic Organics (TTO)	0.124	--
Oil & Grease*	3.58	2.15

(e) Cleaning or Etching - Rinse

Pollutant or Pollutant Property	Maximum for Any One Day	Maximum for Monthly Average
mg/off-kg (lb/million off-lbs) of aluminum cleaned or etched		
Chromium	0.61	0.25
Cyanide	0.41	0.17
Zinc	2.03	0.85
Total Toxic Organics (TTO)	0.96	--
Oil & Grease*	27.82	16.69

*Alternate monitoring limit - oil and grease may be substituted for TTO.

(f) Cleaning or Etching - Scrubber Liquor

Pollutant or Pollutant Property	Maximum for Any One Day	Maximum for Monthly Average
mg/off-kg (lb/million off-lbs) of aluminum cleaned or etched		
Chromium	0.85	0.35
Cyanide	0.56	0.23
Zinc	2.82	1.18
Total Toxic Organics (TTO)	1.34	--
Oil & Grease*	38.66	23.20

(g) Extrusion Press Leakage

Pollutant or Pollutant Property	Maximum for Any One Day	Maximum for Monthly Average
mg/off-kg (lb/million off-lbs) of hard alloy aluminum extruded		
Chromium	0.65	0.27
Cyanide	0.43	0.18
Zinc	2.16	0.90
Total Toxic Organics (TTO)	1.02	--
Oil & Grease*	29.56	17.74

D. PSES FOR THE FORGING SUBCATEGORY

(a) Forging - Core Waste Streams

Pollutant or Pollutant Property	Maximum for Any One Day	Maximum for Monthly Average
mg/off-kg (lb/million off-lbs) of aluminum forged		
Chromium	0.022	0.009
Cyanide	0.015	0.006
Zinc	0.073	0.031
Total Toxic Organics (TTO)	0.035	--
Oil & Grease*	1.00	0.60

*Alternate monitoring limit - oil and grease may be substituted for TTO.

(b) Forging - Scrubber Liquor

Pollutant or Pollutant Property	Maximum for Any One Day	Maximum for Monthly Average
mg/off-kg (lb/million off-lbs) of aluminum forged		
Chromium	0.042	0.017
Cyanide	0.028	0.011
Zinc	0.14	0.058
Total Toxic Organics (TTO)	0.065	--
Oil & Grease*	1.89	1.13

(c) Solution Heat Treatment - Contact Cooling Water

Pollutant or Pollutant Property	Maximum for Any One Day	Maximum for Monthly Average
mg/off-kg (lb/million off-lbs) of aluminum quenched		
Chromium	0.897	0.37
Cyanide	0.591	0.25
Zinc	2.98	1.24
Total Toxic Organics (TTO)	1.41	--
Oil & Grease*	40.74	24.45

(d) Cleaning or Etching - Bath

Pollutant or Pollutant Property	Maximum for Any One Day	Maximum for Monthly Average
mg/off-kg (lb/million off-lbs) of aluminum cleaned or etched		
Chromium	0.079	0.032
Cyanide	0.052	0.022
Zinc	0.26	0.11
Total Toxic Organics (TTO)	0.123	--
Oil & Grease*	3.58	2.15

*Alternate monitoring limit - oil and grease may be substituted for TTO.

(e) Cleaning or Etching - Rinse

Pollutant or Pollutant Property	Maximum for Any One Day	Maximum for Monthly Average
mg/off-kg (lb/million off-lbs) of aluminum cleaned or etched		
Chromium	0.61	0.25
Cyanide	0.40	0.17
Zinc	2.03	0.85
Total Toxic Organics (TTO)	0.96	--
Oil & Grease*	27.82	16.70

(f) Cleaning or Etching - Scrubber Liquor

Pollutant or Pollutant Property	Maximum for Any One Day	Maximum for Monthly Average
mg/off-kg (lb/million off-lbs) of aluminum cleaned or etched		
Chromium	0.851	0.35
Cyanide	0.561	0.23
Zinc	2.82	1.18
Total Toxic Organics (TTO)	1.34	--
Oil & Grease*	38.66	23.20

E. PSES FOR THE DRAWING WITH NEAT OILS SUBCATEGORY

(a) Drawing With Neat Oils - Core Waste Streams

Pollutant or Pollutant Property	Maximum for Any One Day	Maximum for Monthly Average
mg/off-kg (lb/million off-lbs) of aluminum drawn with neat oils		
Chromium	0.022	0.009
Cyanide	0.015	0.006
Zinc	0.073	0.031
Total Toxic Organics (TTO)	0.035	--
Oil & Grease*	1.00	0.60

*Alternate monitoring limit - oil and grease may be substituted for TTO.

(b) Continuous Rod Casting - Contact Cooling Water

Pollutant or Pollutant Property	Maximum for Any One Day	Maximum for Monthly Average
mg/off-kg (lb/million off-lbs) of aluminum cast by continuous methods		
Chromium	0.086	0.035
Cyanide	0.057	0.023
Zinc	0.283	0.118
Total Toxic Organics (TTO)	0.133	--
Oil & Grease*	3.878	2.327

(c) Continuous Rod Casting - Spent Lubricant

Pollutant or Pollutant Property	Maximum for Any One Day	Maximum for Monthly Average
mg/off-kg (lb/million off-lbs) of aluminum cast by continuous methods		
Chromium	0.0009	0.0004
Cyanide	0.0006	0.0003
Zinc	0.0029	0.0012
Total Toxic Organics (TTO)	0.0014	--
Oil & Grease*	0.040	0.024

(d) Solution Heat Treatment - Contact Cooling Water

Pollutant or Pollutant Property	Maximum for Any One Day	Maximum for Monthly Average
mg/off-kg (lb/million off-lbs) of aluminum quenched		
Chromium	0.896	0.367
Cyanide	0.591	0.245
Zinc	2.98	1.24
Total Toxic Organics (TTO)	1.41	--
Oil & Grease*	40.74	24.45

*Alternate monitoring limit - oil and grease may be substituted for TTO.

(e) Cleaning or Etching - Bath

Pollutant or Pollutant Property	Maximum for Any One Day	Maximum for Monthly Average
mg/off-kg (lb/million off-lbs) of aluminum cleaned or etched		
Chromium	0.079	0.033
Cyanide	0.052	0.022
Zinc	0.262	0.109
Total Toxic Organics (TTO)	0.124	--
Oil & Grease*	3.58	2.15

(f) Cleaning or Etching - Rinse

Pollutant or Pollutant Property	Maximum for Any One Day	Maximum for Monthly Average
mg/off-kg (lb/million off-lbs) of aluminum cleaned or etched		
Chromium	0.612	0.251
Cyanide	0.404	0.17
Zinc	2.03	0.85
Total Toxic Organics (TTO)	0.96	--
Oil & Grease*	27.82	16.70

(g) Cleaning or Etching - Scrubber Liquor

Pollutant or Pollutant Property	Maximum for Any One Day	Maximum for Monthly Average
mg/off-kg (lb/million off-lbs) of aluminum cleaned or etched		
Chromium	0.851	0.348
Cyanide	0.561	0.232
Zinc	2.82	1.18
Total Toxic Organics (TTO)	1.34	--
Oil & Grease*	38.66	23.20

*Alternate monitoring limit - oil and grease may be substituted for TTO.

F. PSES FOR THE DRAWING WITH EMULSIONS OR SOAPS SUBCATEGORY

(a) Drawing With Emulsions or Soaps - Core Waste Streams

Pollutant or Pollutant Property	Maximum for Any One Day	Maximum for Monthly Average
mg/off-kg (lb/million off-lbs) of aluminum drawn with emulsions or soaps		
Chromium	0.205	0.084
Cyanide	0.135	0.056
Zinc	0.681	0.285
Total Toxic Organics (TTO)	0.32	--
Oil & Grease*	9.33	5.60

(b) Continuous Rod Casting - Contact Cooling Water

Pollutant or Pollutant Property	Maximum for Any One Day	Maximum for Monthly Average
mg/off-kg (lb/million off-lbs) of aluminum cast by continuous methods		
Chromium	0.086	0.035
Cyanide	0.056	0.024
Zinc	0.283	0.119
Total Toxic Organics (TTO)	0.134	--
Oil & Grease*	3.88	2.33

(c) Continuous Rod Casting - Spent Lubricant

Pollutant or Pollutant Property	Maximum for Any One Day	Maximum for Monthly Average
mg/off-kg (lb/million off-lbs) of aluminum cast by continuous methods		
Chromium	0.0009	0.0004
Cyanide	0.0006	0.0003
Zinc	0.0029	0.0012
Total Toxic Organics (TTO)	0.0014	--
Oil & Grease*	0.040	0.024

*Alternate monitoring limit - oil and grease may be substituted for TTO.

(d) Solution Heat Treatment - Contact Cooling Water

Pollutant or Pollutant Property	Maximum for Any One Day	Maximum for Monthly Average
mg/off-kg (lb/million off-lbs) of aluminum quenched		
Chromium	0.896	0.367
Cyanide	0.591	0.245
Zinc	2.98	1.25
Total Toxic Organics (TTO)	1.41	--
Oil & Grease*	40.74	24.44

(e) Cleaning or Etching - Bath

Pollutant or Pollutant Property	Maximum for Any One Day	Maximum for Monthly Average
mg/off-kg (lb/million off-lbs) of aluminum cleaned or etched		
Chromium	0.079	0.032
Cyanide	0.052	0.022
Zinc	0.262	0.11
Total Toxic Organics (TTO)	0.124	--
Oil & Grease*	3.58	2.15

(f) Cleaning or Etching - Rinse

Pollutant or Pollutant Property	Maximum for Any One Day	Maximum for Monthly Average
mg/off-kg (lb/million off-lbs) of aluminum cleaned or etched		
Chromium	0.612	0.251
Cyanide	0.404	0.167
Zinc	2.03	0.849
Total Toxic Organics (TTO)	0.96	--
Oil & Grease*	27.82	16.69

*Alternate monitoring limit - oil and grease may be substituted for TTO.

(g) Cleaning or Etching - Scrubber Liquor

Pollutant or Pollutant Property	Maximum for Any One Day	Maximum for Monthly Average
mg/off-kg (lb/million off-lbs) of aluminum cleaned or etched		
Chromium	0.851	0.348
Cyanide	0.561	0.232
Zinc	2.82	1.18
Total Toxic Organics (TTO)	1.34	--
Oil & Grease*	38.66	23.20

6. PSNS is being promulgated based on the model treatment technology of oil skimming and chemical precipitation, sedimentation and filtration (lime, settle, and filter) technology and in-process flow reduction control methods, and where applicable, chemical emulsion breaking, chromium reduction, and cyanide removal. The following pretreatment standards are being promulgated for new sources:

A. PSNS FOR THE ROLLING WITH NEAT OILS SUBCATEGORY

(a) Rolling With Neat Oils - Core Waste Streams Without An Annealing Furnace Scrubber

Pollutant or Pollutant Property	Maximum for Any One Day	Maximum for Monthly Average
mg/off-kg (lb/million off-lbs) of aluminum rolled with neat oils		
Chromium	0.021	0.009
Cyanide	0.011	0.005
Zinc	0.057	0.024
Total Toxic Organics (TTO)	0.038	--
Oil & Grease*	0.54	0.54

*Alternate monitoring limit - oil and grease may be substituted for TTO.

(b) Rolling With Neat Oils - Core Waste Streams With An Annealing Furnace Scrubber

Pollutant or Pollutant Property	Maximum for Any One Day	Maximum for Monthly Average
mg/off-kg (lb/million off-lbs) of aluminum rolled with neat oils		
Chromium	0.030	0.013
Cyanide	0.017	0.007
Zinc	0.084	0.035
Total Toxic Organics (TTO)	0.057	--
Oil & Grease*	0.817	0.817

(c) Continuous Sheet Casting - Spent Lubricant

Pollutant or Pollutant Property	Maximum for Any One Day	Maximum for Monthly Average
mg/off-kg (lb/million off-lbs) of aluminum cast by continuous methods		
Chromium	0.00073	0.00029
Cyanide	0.00039	0.00016
Zinc	0.0020	0.00082
Total Toxic Organics (TTO)	0.0014	--
Oil & Grease*	0.020	0.020

(d) Solution Heat Treatment - Contact Cooling Water

Pollutant or Pollutant Property	Maximum for Any One Day	Maximum for Monthly Average
mg/off-kg (lb/million off-lbs) of aluminum quenched		
Chromium	0.76	0.31
Cyanide	0.41	0.17
Zinc	2.08	0.86
Total Toxic Organics (TTO)	1.41	--
Oil & Grease*	20.37	20.37

*Alternate monitoring limit - oil and grease may be substituted for TTO.

(e) Cleaning or Etching - Bath

Pollutant or Pollutant Property	Maximum for Any One Day	Maximum for Monthly Average
mg/off-kg (lb/million off-lbs) of aluminum cleaned or etched		
Chromium	0.067	0.027
Cyanide	0.036	0.015
Zinc	0.183	0.075
Total Toxic Organics (TTO)	0.124	--
Oil & Grease*	1.79	1.79

(f) Cleaning or Etching - Rinse

Pollutant or Pollutant Property	Maximum for Any One Day	Maximum for Monthly Average
mg/off-kg (lb/million off-lbs) of aluminum cleaned or etched		
Chromium	0.52	0.21
Cyanide	0.28	0.11
Zinc	1.42	0.59
Total Toxic Organics (TTO)	0.96	--
Oil & Grease*	13.91	13.91

(g) Cleaning or Etching - Scrubber Liquor

Pollutant or Pollutant Property	Maximum for Any One Day	Maximum for Monthly Average
mg/off-kg (lb/million off-lbs) of aluminum cleaned or etched		
Chromium	0.72	0.29
Cyanide	0.39	0.16
Zinc	1.97	0.81
Total Toxic Organics (TTO)	1.34	--
Oil & Grease*	19.33	19.33

*Alternate monitoring limit - oil and grease may be substituted for TTO.

B. PSNS FOR THE ROLLING WITH EMULSIONS SUBCATEGORY

(a) Rolling With Emulsions - Core Waste Streams

Pollutant or Pollutant Property	Maximum for Any One Day	Maximum for Monthly Average
mg/off-kg (lb/million off-lbs) of aluminum rolled with emulsions		
Chromium	0.048	0.020
Cyanide	0.026	0.011
Zinc	0.133	0.055
Total Toxic Organics (TTO)	0.090	--
Oil & Grease*	1.30	1.30

(b) Direct Chill Casting - Contact Cooling Water

Pollutant or Pollutant Property	Maximum for Any One Day	Maximum for Monthly Average
mg/off-kg (lb/million off-lbs) of aluminum cast by direct chill methods		
Chromium	0.49	0.20
Cyanide	0.27	0.11
Zinc	1.36	0.56
Total Toxic Organics (TTO)	0.92	--
Oil & Grease*	13.29	13.29

(c) Solution Heat Treatment - Contact Cooling Water

Pollutant or Pollutant Property	Maximum for Any One Day	Maximum for Monthly Average
mg/off-kg (lb/million off-lbs) of aluminum quenched		
Chromium	0.76	0.31
Cyanide	0.41	0.17
Zinc	2.08	0.86
Total Toxic Organics (TTO)	1.41	--
Oil & Grease*	20.37	20.37

*Alternate monitoring limit - oil and grease may be substituted for TTO.

(d) Cleaning or Etching - Bath

Pollutant or Pollutant Property	Maximum for Any One Day	Maximum for Monthly Average
mg/off-kg (lb/million off-lbs) of aluminum cleaned or etched		
Chromium	0.079	0.032
Cyanide	0.052	0.022
Zinc	0.26	0.109
Total Toxic Organics (TTO)	0.00	0.00
Oil & Grease*	0.00	0.00

(e) Cleaning or Etching - Rinse

Pollutant or Pollutant Property	Maximum for Any One Day	Maximum for Monthly Average
mg/off-kg (lb/million off-lbs) of aluminum cleaned or etched		
Chromium	0.52	0.21
Cyanide	0.28	0.11
Zinc	1.42	0.59
Total Toxic Organics (TTO)	0.96	--
Oil & Grease*	13.91	13.91

(f) Cleaning or Etching - Scrubber Liquor

Pollutant or Pollutant Property	Maximum for Any One Day	Maximum for Monthly Average
mg/off-kg (lb/million off-lbs) of aluminum cleaned or etched		
Chromium	0.72	0.29
Cyanide	0.39	0.16
Zinc	1.97	0.81
Total Toxic Organics (TTO)	1.34	--
Oil & Grease*	19.33	19.33

*Alternate monitoring limit - oil and grease may be substituted for TTO.

C. PSNS FOR THE EXTRUSION SUBCATEGORY

(a) Extrusion - Core Waste Streams

Pollutant or Pollutant Property	Maximum for Any One Day	Maximum for Monthly Average
mg/off-kg (lb/million off-lbs) of aluminum extruded		
Chromium	0.13	0.05
Cyanide	0.07	0.03
Zinc	0.35	0.15
Total Toxic Organics (TTO)	0.24	--
Oil & Grease*	3.40	3.40

(b) Direct Chill Casting - Contact Cooling Water

Pollutant or Pollutant Property	Maximum for Any One Day	Maximum for Monthly Average
mg/off-kg (lb/million off-lbs) of aluminum cast by direct chill methods		
Chromium	0.49	0.05
Cyanide	0.27	0.03
Zinc	1.36	0.13
Total Toxic Organics (TTO)	0.92	--
Oil & Grease*	13.29	2.98

(c) Solution and Press Heat Treatment - Contact Cooling Water

Pollutant or Pollutant Property	Maximum for Any One Day	Maximum for Monthly Average
mg/off-kg (lb/million off-lbs) of aluminum quenched		
Chromium	0.76	0.31
Cyanide	0.41	0.17
Zinc	2.08	0.86
Total Toxic Organics (TTO)	1.41	--
Oil & Grease*	20.37	20.37

*Alternate monitoring limit - oil and grease may be substituted for TTO.

(d) Cleaning or Etching - Bath

Pollutant or Pollutant Property	Maximum for Any One Day	Maximum for Monthly Average
mg/off-kg (lb/million off-lbs) of aluminum cleaned or etched		
Chromium	0.067	0.027
Cyanide	0.036	0.015
Zinc	0.183	0.075
Total Toxic Organics (TTO)	0.00	0.00
Oil & Grease*	1.79	1.79

(e) Cleaning or Etching - Rinse

Pollutant or Pollutant Property	Maximum for Any One Day	Maximum for Monthly Average
mg/off-kg (lb/million off-lbs) of aluminum cleaned or etched		
Chromium	0.52	0.21
Cyanide	0.28	0.11
Zinc	1.42	0.59
Total Toxic Organics (TTO)	0.96	--
Oil & Grease*	13.91	13.91

(f) Cleaning or Etching - Scrubber Liquor

Pollutant or Pollutant Property	Maximum for Any One Day	Maximum for Monthly Average
mg/off-kg (lb/million off-lbs) of aluminum cleaned or etched		
Chromium	0.72	0.29
Cyanide	0.39	0.16
Zinc	1.97	0.81
Total Toxic Organics (TTO)	1.34	--
Oil & Grease*	19.33	19.33

*Alternate monitoring limit - oil and grease may be substituted for TTO.

(g) Extrusion Press Leakage

Pollutant or Pollutant Property	Maximum for Any One Day	Maximum for Monthly Average
mg/off-kg (lb/million off-lbs) of hard alloy aluminum extruded		
Chromium	0.11	0.05
Cyanide	0.06	0.03
Zinc	0.31	0.13
Total Toxic Organics (TTO)	0.21	--
Oil & Grease*	2.98	2.98

D. PSNS FOR THE FORGING SUBCATEGORY

(a) Forging - Core Waste Streams

Pollutant or Pollutant Property	Maximum for Any One Day	Maximum for Monthly Average
mg/off-kg (lb/million off-lbs) of aluminum forged		
Chromium	0.019	0.008
Cyanide	0.010	0.004
Zinc	0.051	0.021
Total Toxic Organics (TTO)	0.035	--
Oil & Grease*	0.50	0.50

(b) Forging - Scrubber Liquor

Pollutant or Pollutant Property	Maximum for Any One Day	Maximum for Monthly Average
mg/off-kg (lb/million off-lbs) of aluminum forged		
Chromium	0.035	0.014
Cyanide	0.019	0.008
Zinc	0.096	0.040
Total Toxic Organics (TTO)	0.065	--
Oil & Grease*	0.95	0.95

*Alternate monitoring limit - oil and grease may be substituted for TTO.

(c) Solution Heat Treatment - Contact Cooling Water

Pollutant or Pollutant Property	Maximum for Any One Day	Maximum for Monthly Average
mg/off-kg (lb/million off-lbs) of aluminum quenched		
Chromium	0.76	0.31
Cyanide	0.41	0.16
Zinc	2.08	0.86
Total Toxic Organics (TTO)	1.41	--
Oil & Grease*	20.37	20.37

(d) Cleaning or Etching - Bath

Pollutant or Pollutant Property	Maximum for Any One Day	Maximum for Monthly Average
mg/off-kg (lb/million off-lbs) of aluminum cleaned or etched		
Chromium	0.066	0.027
Cyanide	0.036	0.015
Zinc	0.183	0.075
Total Toxic Organics (TTO)	0.124	--
Oil & Grease*	1.79	1.79

(e) Cleaning or Etching - Rinse

Pollutant or Pollutant Property	Maximum for Any One Day	Maximum for Monthly Average
mg/off-kg (lb/million off-lbs) of aluminum cleaned or etched		
Chromium	0.52	0.21
Cyanide	0.28	0.11
Zinc	1.42	0.59
Total Toxic Organics (TTO)	0.96	--
Oil & Grease*	13.91	13.91

*Alternate monitoring limit - oil and grease may be substituted for TTO.

(f) Cleaning or Etching - Scrubber Liquor

Pollutant or Pollutant Property	Maximum for Any One Day	Maximum for Monthly Average
mg/off-kg (lb/million off-lbs) of aluminum cleaned or etched		
Chromium	0.72	0.29
Cyanide	0.39	0.16
Zinc	1.97	0.812
Total Toxic Organics (TTO)	1.34	--
Oil & Grease*	19.33	19.33

E. PSNS FOR THE DRAWING WITH NEAT OILS SUBCATEGORY

(a) Drawing With Neat Oils - Core Waste Streams

Pollutant or Pollutant Property	Maximum for Any One Day	Maximum for Monthly Average
mg/off-kg (lb/million off-lbs) of aluminum drawn with neat oils		
Chromium	0.019	0.008
Cyanide	0.010	0.004
Zinc	0.051	0.021
Total Toxic Organics (TTO)	0.035	--
Oil & Grease*	0.50	0.50

(b) Continuous Rod Casting - Contact Cooling Water

Pollutant or Pollutant Property	Maximum for Any One Day	Maximum for Monthly Average
mg/off-kg (lb/million off-lbs) of aluminum cast by continuous methods		
Chromium	0.072	0.029
Cyanide	0.039	0.016
Zinc	0.198	0.082
Total Toxic Organics (TTO)	0.134	--
Oil & Grease*	1.94	1.94

*Alternate monitoring limit - oil and grease may be substituted for TTO.

(c) Continuous Rod Casting - Spent Lubricant

Pollutant or Pollutant Property	Maximum for Any One Day	Maximum for Monthly Average
mg/off-kg (lb/million off-lbs) of aluminum cast by continuous methods		
Chromium	0.0007	0.0003
Cyanide	0.0004	0.0002
Zinc	0.0020	0.0008
Total Toxic Organics (TTO)	0.0014	--
Oil & Grease*	0.020	0.020

(d) Solution Heat Treatment - Contact Cooling Water

Pollutant or Pollutant Property	Maximum for Any One Day	Maximum for Monthly Average
mg/off-kg (lb/million off-lbs) of aluminum quenched		
Chromium	0.76	0.306
Cyanide	0.41	0.163
Zinc	2.08	0.856
Total Toxic Organics (TTO)	1.41	--
Oil & Grease*	20.37	20.37

(e) Cleaning or Etching - Bath

Pollutant or Pollutant Property	Maximum for Any One Day	Maximum for Monthly Average
mg/off-kg (lb/million off-lbs) of aluminum cleaned or etched		
Chromium	0.067	0.027
Cyanide	0.036	0.015
Zinc	0.183	0.075
Total Toxic Organics (TTO)	0.124	--
Oil & Grease*	1.79	1.79

*Alternate monitoring limit - oil and grease may be substituted for TTO.

(f) Cleaning or Etching - Rinse

Pollutant or Pollutant Property	Maximum for Any One Day	Maximum for Monthly Average
mg/off-kg (lb/million off-lbs) of aluminum cleaned or etched		
Chromium	0.52	0.21
Cyanide	0.28	0.11
Zinc	1.42	0.59
Total Toxic Organics (TTO)	0.96	--
Oil & Grease*	13.91	13.91

(g) Cleaning or Etching - Scrubber Liquor

Pollutant or Pollutant Property	Maximum for Any One Day	Maximum for Monthly Average
mg/off-kg (lb/million off-lbs) of aluminum cleaned or etched		
Chromium	0.72	0.29
Cyanide	0.39	0.16
Zinc	1.97	0.812
Total Toxic Organics (TTO)	1.34	--
Oil & Grease*	19.33	19.33

F. PSNS FOR THE DRAWING WITH EMULSIONS OR SOAPS SUBCATEGORY

(a) Drawing With Emulsions or Soaps - Core Waste Streams

Pollutant or Pollutant Property	Maximum for Any One Day	Maximum for Monthly Average
mg/off-kg (lb/million off-lbs) of aluminum drawn with emulsions or soaps		
Chromium	0.173	0.070
Cyanide	0.094	0.038
Zinc	0.48	0.196
Total Toxic Organics (TTO)	0.32	--
Oil & Grease	4.67	4.67

*Alternate monitoring limit - oil and grease may be substituted for TTO.

(b) Continuous Rod Casting - Contact Cooling Water

Pollutant or Pollutant Property	Maximum for Any One Day	Maximum for Monthly Average
mg/off-kg (lb/million off-lbs) of aluminum cast by continuous methods		
Chromium	0.072	0.029
Cyanide	0.039	0.016
Zinc	0.198	0.082
Total Toxic Organics (TTO)	0.134	--
Oil & Grease*	1.94	1.94

(c) Continuous Rod Casting - Spent Lubricant

Pollutant or Pollutant Property	Maximum for Any One Day	Maximum for Monthly Average
mg/off-kg (lb/million off-lbs) of aluminum cast by continuous methods		
Chromium	0.0007	0.0003
Cyanide	0.0004	0.0002
Zinc	0.0020	0.0008
Total Toxic Organics (TTO)	0.0014	--
Oil & Grease*	0.020	0.020

(d) Solution Heat Treatment - Contact Cooling Water

Pollutant or Pollutant Property	Maximum for Any One Day	Maximum for Monthly Average
mg/off-kg (lb/million off-lbs) of aluminum quenched		
Chromium	0.76	0.306
Cyanide	0.41	0.163
Zinc	2.08	0.856
Total Toxic Organics (TTO)	1.41	--
Oil & Grease*	20.37	20.37

*Alternate monitoring limit - oil and grease may be substituted for TTO.

(e) Cleaning or Etching - Bath

Pollutant or Pollutant Property	Maximum for Any One Day	Maximum for Monthly Average
mg/off-kg (lb/million off-lbs) of aluminum cleaned or etched		
Chromium	0.067	0.027
Cyanide	0.036	0.015
Zinc	0.183	0.075
Total Toxic Organics (TTO)	0.124	--
Oil & Grease*	1.79	1.79

(f) Cleaning or Etching - Rinse

Pollutant or Pollutant Property	Maximum for Any One Day	Maximum for Monthly Average
mg/off-kg (lb/million off-lbs) of aluminum cleaned or etched		
Chromium	0.52	0.21
Cyanide	0.28	0.11
Zinc	1.42	0.59
Total Toxic Organics (TTO)	0.96	--
Oil & Grease*	13.91	13.91

(g) Cleaning or Etching - Scrubber Liquor

Pollutant or Pollutant Property	Maximum for Any One Day	Maximum for Monthly Average
mg/off-kg (lb/million off-lbs) of aluminum cleaned or etched		
Chromium	0.715	0.290
Cyanide	0.387	0.155
Zinc	1.97	0.812
Total Toxic Organics (TTO)	1.34	--
Oil & Grease*	19.33	19.33

*Alternate monitoring limit - oil and grease may be substituted for TTO.

SECTION III

INTRODUCTION

LEGAL AUTHORITY

The Federal Water Pollution Control Act Amendments of 1972 established a comprehensive program to "restore and maintain the chemical, physical, and biological integrity of the Nation's waters" (Section 101(a)). To implement the Act, EPA was to issue effluent limitations guidelines, pretreatment standards, and new source performance standards for industry dischargers.

The Act included a timetable for issuing these standards. However, EPA was unable to meet many of the deadlines and, as a result, in 1976, it was sued by several environmental groups.

In settling this lawsuit, EPA and the plaintiffs executed a court-approved "Settlement Agreement." This Agreement required EPA to develop a program and adhere to a schedule in promulgating effluent limitations guidelines, new source performance standards, and pretreatment standards for 65 "priority" pollutants and classes of pollutants for 21 major industries. See Natural Resources Defense Council, Inc. v. Train, 8 ERC 2120 (D.D.C. 1976), modified, 12 ERC 1833 (D.D.C. 1979), modified by Orders dated October 26, 1982 and August 2, 1983.

Many of the basic elements of this Settlement Agreement program were incorporated into the Clean Water Act of 1977. Like the Agreement, the Act stressed control of toxic pollutants, including the 65 "priority" pollutants. In addition to strengthening the toxic control program, Section 304(e) of the Act authorizes the Administrator to prescribe "best management practices" (BMP) to prevent the release of toxic and hazardous pollutants from plant site runoff, spillage or leaks, sludge or waste disposal, and drainage from raw material storage associated with, or ancillary to, the manufacturing or treatment process.

The purpose of this document is to provide the supporting technical data regarding water use, pollutants, and treatment technologies for BPT, BAT, NSPS, PSES, and PSNS effluent limitations that EPA is promulgating for the aluminum forming category under Sections 301, 304, 306, 307, 308, and 501 of the Clean Water Act.

DATA COLLECTION AND UTILIZATION

EPA gathered and evaluated technical data in the course of developing these guidelines in order to perform the following tasks:

1. To profile the category with regard to the production, manufacturing processes, geographical distribution, potential wastewater streams, and discharge mode of aluminum forming plants.

2. To subcategorize, if necessary, in order to permit regulation of the aluminum forming category in an equitable and manageable way. This was done by taking all of the factors mentioned above plus others into account.

3. To characterize wastewater, detailing water use, wastewater discharge, and the occurrence of priority, conventional, and nonconventional pollutants, in waste streams from aluminum forming processes.

4. To select pollutant parameters--those priority, conventional, and nonconventional pollutants present at significant concentrations in wastewater streams--that should be considered for regulation.

5. To consider control and treatment technologies and select alternative methods for reducing pollutant discharge in this category.

6. To consider the costs of implementing the alternative control and treatment technologies.

7. To present possible regulatory alternatives.

Sources of Industry Data

Data on the aluminum forming category were gathered from previous EPA studies, literature studies, inquiries to federal and state environmental agencies, raw material manufacturers and suppliers, trade association contacts, and the aluminum forming manufacturers themselves. Additionally, meetings were held with industry representatives and the EPA. All known aluminum formers were sent a data collection portfolio (dcp) requesting specific information concerning each facility. Finally, a sampling program was carried out at 25 plants. The sampling program consisted of screen sampling and analysis at four facilities to determine the presence of a broad range of pollutants and verification at 21 plants to quantify the pollutants present in aluminum forming wastewater. Specific details of the sampling program and information from the above data sources are presented in Section V.

After proposal on November 22, 1982, a large number of public comments were received on the proposed regulation and supporting documents, many containing additional data about the category.

The Agency sent out requests for additional information and data to 13 commenters and visited six facilities; sampling and analyses were performed at five of those plants. On July 27, 1983, a notice was published in the Federal Register (49 FR 34079) announcing the availability of additional data for review and comment. All additional information obtained since proposal which arrived in a timely manner and all comments on the proposed regulation were considered in preparing the final regulation.

Literature Review. EPA reviewed and evaluated existing literature for background information to clarify and define various aspects of the aluminum forming category and to determine general characteristics and trends in production processes and wastewater treatment technology. Review of current literature continued throughout the development of these guidelines.

Plant Survey and Evaluation. The aluminum forming plants were surveyed to gather information regarding plant size, age and production, the production processes used, and the quantity, treatment, and disposal of wastewater generated at these plants. This information was requested in dcp's mailed to all companies known or believed to be involved in the forming of aluminum or aluminum alloys. The original mailing list was compiled from the following sources:

- U.S. Department of Commerce, Directory of Aluminum Suppliers in the United States, Revised January 1978.

- Architectural Aluminum Manufacturers Association, Membership Directory, 1977.

- Aluminum Foil Container Manufacturers Association, Membership Roster as of May 1, 1978.

- Dun & Bradstreet, Inc., Million Dollar Directory, 1978.

In all, dcp's were sent to 580 firms. Approximately 95 percent of the companies responded to the survey. In many cases, companies contacted were not actually members of the aluminum forming category as it is defined by the Agency. Where firms had aluminum forming operations at more than one location, a dcp was requested from each plant. A total of 279 dcp's applicable to the aluminum forming category were returned. Two plants had ceased aluminum forming operations before proposal and a total of 277 plants were included in the data base at proposal. Subsequent to proposal, the Agency became aware of three plants which have closed and three additional plants which have ceased aluminum forming operations. Therefore, a total of 271 plants are included in the data base. In cases where the dcp responses were

incomplete or unclear, additional information was requested by telephone or letter.

The dcp responses were interpreted individually, and the following data were documented for future reference and evaluation:

- Company name, plant address, and name of the contact listed in the dcp.

- Plant discharge status as direct (to surface water), indirect (to POTW), or zero discharge.

- Production process streams present at the plant, as well as associated flow rates; production rates; operating hours; wastewater treatment, reuse, or disposal methods; the quantity and nature of process chemicals; and the percent of any soluble oil used in emulsified mixtures.

- Capital and annual treatment costs.

- Availability of pollutant monitoring data provided by the plant.

The summary listing of this information provided a consistent, systematic method of evaluating and summarizing the dcp responses. In addition, procedures were developed to simplify subsequent analyses. The procedures developed had the following capabilities:

- Selection and listing of plants containing specific production process streams or treatment technologies.

- Summation of the number of plants containing specific process stream and treatment combinations.

- Calculation of the percent recycle present for specific streams and summation of the number of plants recycling this stream within various percent recycle ranges.

- Calculation of annual production values associated with each process stream and summation of the number of plants with these process streams having production values within various ranges.

- Calculation of water use and blowdown from individual process streams.

In addition to industry data obtained from dcp's, telephone contacts were made with plants in the aluminum forming category to expand the Agency's information on extrusion die cleaning baths,

rinses, and scrubbers, and on the roll grinding operations. Telephone contacts also served to clarify information contained in the dcp's.

The calculated information and summaries were important and frequently used in the development of this guideline. Summaries were used in the category profile, evaluation of subcategorization, and analysis of in-place treatment and control technologies. Calculated information was used in the determination of water use and discharge values for the conversion of pollutant concentrations to mass loadings.

Utilization of Industry Data

Data collected from the previously listed sources are used throughout this report in the development of a base for BPT and BAT limitations and NSPS and pretreatment standards. Previous EPA studies as well as the literature provided the basis for the aluminum forming subcategorization discussed in Section IV. Raw wastewater characteristics for each subcategory presented in Section V were obtained from the screening and verification sampling. Selection of pollutant parameters for control (Section VI) was based on verification and screening sampling results. These provided information on both the pollutants which the plant personnel felt were in their wastewater discharges and those pollutants specifically found in aluminum forming wastewaters as the result of sampling. Based on the selection of pollutants requiring control and their levels, applicable treatment technologies were identified and these are described in Section VII of this document. Actual wastewater treatment technologies utilized by aluminum forming plants (as identified in the dcp responses and observed at the sampled plants) were also used to identify applicable treatment technologies. The costs of treatment (both individual technologies and systems) were based primarily on data from equipment manufacturers and literature and are contained in Section VIII of this document. Finally, dcp data, sampling data, and estimated treatment system performance are utilized in Sections IX, X, XI, and XII (BPT, BAT, NSPS, and pretreatment, respectively) in the selection of applicable treatment systems; the presentation of achievable effluent levels; and the presentation of actual effluent levels obtained for each aluminum forming subcategory.

DATA COLLECTION SINCE PROPOSAL

After proposal of the Aluminum Forming Regulation, EPA provided a 75 day comment period, which closed on February 8, 1983. EPA received approximately 1,000 individual comments from 24 different commenters. The Agency gathered additional data after

proposal to clarify data and to provide further support for the regulation.

Under authority of Section 308 of the Clean Water Act, the Agency requested specific additional information and data from 13 commenters to clarify and support their individual comments. The Agency's request for information asked each commenter to provide specific information supporting their particular comments. Responses were received from all of the 13 commenters. The additional data and information received related primarily to wastewater sources not specifically considered by the proposed regulation; space limitations and retrofit problems involved with the installation of two-stage countercurrent rinsing; and the classification and disposal costs of solid wastes generated by wastewater treatment. We received flow and production data for additional waste streams as well as information on treatment and characteristics of these streams. Plan view diagrams were submitted by two companies to show space availability for countercurrent cascade rinsing. We also received information regarding operating schedules for surface treatment lines. Cost information was submitted for solid waste disposal as well as copies of correspondence with disposal companies and state or local authorities. We also received new technical information on the regeneration of cleaning and etching baths.

To supplement existing data regarding treatment-in-place and the long-term performance of that treatment, we collected discharge monitoring report (DMR) data from state or EPA Regional offices for direct dischargers. DMR data are self-monitoring data supplied by permit holders to meet state or EPA permit requirements. These data were available from 30 aluminum forming plants; however, the data vary widely in character and nature due to the dissimilar nature of the monitoring and reporting requirements placed on aluminum forming plants by the NPDES permit issuing authority. These data were not used in the actual development of the final limitations but DMR data from 11 plants that have lime and settle treatment were used as a check on the achievability of the treatment effectiveness values used to establish limitations and standards. A discussion on these DMR data and a comparison of them to the treatment effectiveness values used in this regulation is found in the administrative record to this rulemaking.

The existing treatment effectiveness data were reviewed thoroughly following proposal. As a result of this review, minor additions and deletions were made to the Agency's treatment effectiveness data base. These changes are documented in the record along with responses to comments. Following the changes, statistical analyses performed prior to proposal were repeated. Conclusions reached prior to proposal were unchanged and little

or no effect on the final limitations occurred as a result of changes in the data.

Additional data were obtained from 17 plants that perform anodizing and conversion coating operations as an integral part of their aluminum forming extrusion operations. These data, obtained by site visits, telephone contacts, and letter requests, were used to expand the process configuration, production, and wastewater flow information obtained during the Agency's 1978 data collection effort with regard to plants which perform anodizing and conversion coating. These data were used to characterize wastewater flows and subsequently estimate cost of compliance for these plants.

Since proposal, the Agency made engineering visits to six aluminum forming plants to determine the flow characteristics of 12 wastewater streams (sawing spent lubricant, roll grinding spent lubricant, die cleaning baths, extrusion press hydraulic leakage, detergent cleaning baths and rinses, anodizing baths and rinses, dye baths and rinses, and sealing baths and rinses). Additionally, we collected samples for chemical analysis at five of these plants to determine the nature of the above wastewater streams and the effectiveness of end-of-pipe treatment in removing pollutants, primarily aluminum. In addition to the wastewater streams listed above, we sampled a variety of process wastewaters to characterize treatment effectiveness.

A notice of data availability was published in the Federal Register on July 27, 1983 and the comment period for this notice ended on August 11, 1983.

The data described above were analyzed and incorporated with the data collected prior to proposal, and were used in the development of the final effluent limitations guidelines and standards delineated in this document. A further discussion of how these additional data were used is presented in the appropriate sections of this document.

DESCRIPTION OF THE ALUMINUM FORMING CATEGORY

The aluminum forming industry is generally included within SIC 3353, 3354, 3355, and 3463 of the Standard Industrial Classification Manual, prepared in 1972 and supplemented in 1977 by the Office of Management and Budget, Executive Office of the President.

Aluminum forming is the deformation of aluminum or aluminum alloys into specific shapes by hot or cold working such as rolling, extrusion, forging, and drawing. Also included are a number of ancillary operations such as casting, heat treatment, and sur-

face treatment that are an integral part of aluminum forming processes and that can contribute significantly to the wastewaters discharged from aluminum forming plants. For the purposes of this regulation, surface treatment is considered to be a part of aluminum forming whenever it is performed as an integral part of aluminum forming. All surface treatment of aluminum is considered to be an integral part of aluminum forming whenever it is performed at the same plant site at which aluminum is formed. The manufacture of aluminum powders and the forming of parts from aluminum or aluminum alloy powders will be regulated under the nonferrous metals forming regulation. Casting done at a plant which manufactures aluminum and also does aluminum forming will be subject to the casting limitations for the aluminum manufacturing subcategories of the nonferrous metals category if they cast the aluminum without cooling. If the aluminum is a remelted primary aluminum product and is cast at a facility for subsequent forming of aluminum, then the casting of remelted aluminum will be subject to the aluminum forming limitations.

Historical

The dcp responses indicate that 156 companies own 271 aluminum forming plants. Five of the companies own 22 percent of the plants, and 16 companies own 42 percent of the production facilities.

Employment data is given in the dcp responses for 248 plants (89 percent of the total). These plants report a total of 28,557 workers involved in aluminum forming. Employment at the individual sites ranges from one to 2,100 people. The employment distribution of aluminum forming workers at the 248 plants is: 69 percent employ fewer than 100 people in aluminum forming operations; 83 percent employ fewer than 200 people in this capacity; and 95 percent employ fewer than 500 people.

Aluminum forming plants are not limited to any one geographical location. As shown in Figure III-2, plants are found throughout most of the United States, but the majority are located east of the Mississippi River. Population density is not a limiting factor in plant location. Aluminum forming plants tend to be more common in urban areas, but they are frequently found in rural areas as well.

The majority of the aluminum forming plants (55 percent) that reported the age of their facility indicated they were built since 1957. Table III-2 shows the age distribution of aluminum forming plants according to their classification as direct, indirect, and zero discharge type. The dates of most recent modification were reported by 230 plants. The distribution of facilities according to time elapsed since their last major plant

modification is given in Table III-3. Of the 271 aluminum forming plants, 44 percent have been modified since 1972.

Product Description

There are a number of advantages to using aluminum in a wide variety of products. Chief among these are that aluminum is lightweight, tough, resistant to corrosion, and has high electrical conductivity. The major uses of aluminum are in the building and construction industry, transportation industries, the electrical products industry, and in container and package manufacturing.

Products manufactured by aluminum forming operations generally serve as stock for subsequent fabricating operations, as shown in Figure III-1. Cast ingots and billets are the starting point for making sheet and plate, extrusions, and forgings, as well as rod, for use in drawing operations. Rolled aluminum sheet and plate can be used as stock for stampings, can blanks, and roll formed products; as finished products in building, ship and aircraft construction; or as foil. Extrusions can be used as raw stock for forging and drawing; to fabricate final products, such as bumpers, window frames, or light standards; or can be sold as final products, such as beams or extruded tubing. Forgings are either sold as consumer products or used as parts in the production of machinery, aircraft, and engines.

The variety and type of products produced at one location has a large influence on the production capacity of the forming plant, the number of people employed, and the amount of water used. The capital intensive investment, large source of energy required, and specialized labor force involved in making aluminum sheet, strip, foil, and plate products limit the number of facilities available to meet the demand for these sheet products. Most sheet products are made at a few large plants owned by major companies. Table III-1 summarizes data about these and other products of aluminum forming. A variety of sheet products are often produced at the same location. Other products, such as billets and extrusions, are frequently made in conjunction with the rolled products at these plants.

Tubes, rod, cable, and wire are produced at sites that range in size from very large to small. On a mass basis most drawn products are produced by a few large companies or factories, while the remainder are produced by a number of smaller firms. Employment varies from a few to several hundred people.

Extrusion and forging processes, which produce a wide variety of products, do not require large facilities. Consequently, extrusion and forging products are formed at many sites by a number of

companies. Production and employment at facilities using either type of process range from small plants with few workers to large plants with hundreds of employees. Some extrusion plants have other forming operations as well. Forging, however, is usually performed by plants that are not involved in other processes.

Casting in the aluminum forming category, both continuous and direct chill, is done prior to another operation, such as rolling or extrusion. Aluminum billets or ingots are rarely cast at aluminum forming plants for sale to other industries or firms. Stationary casting in this industry usually involves only melted in-plant scrap aluminum. The ingots, frequently called pigs or sows, produced from stationary casting are normally remelted and used as stock for continuous or direct chill casting.

Reported production of formed aluminum at individual plant sites ranged from .09 kkg (0.1 ton) to almost 360,000 kkg (400,000 tons) during 1977. The aluminum forming production distribution for the 249 plants, for which 1977 production data were available, is summarized as follows: 75 percent produced less than 9,000 kkg (10,000 tons); 96 percent produced less than 45,000 kkg (50,000 tons); and 98 percent produced less than 180,000 kkg (200,000 tons).

One hundred forty plants indicated that no wastewater from aluminum forming operations is discharged to either surface waters or a POTW. Of the remaining 131, 59 discharge an effluent from aluminum forming directly to surface waters, and 72 discharge indirectly, sending aluminum forming effluent through a POTW. The volume of aluminum forming wastewater discharged by plants in this category ranges from 0 to 2,896,000 liters per hour (0 to 765,000 gal/hr). The mean volume is approximately 74,000 liters per hour (19,540 gal/hr) for those plants having discharges. Two hundred fifty-nine plants supplied wastewater data. This is less than the total number of aluminum forming plants in the category because several plants did not provide enough information to calculate the flows. Of these 259 plants, over 50 percent reported no wastewater discharge from aluminum forming operations; 90 percent discharge less than 19,000 liters per hour (5,000 gal/hr); and 98 percent discharge less than 190,000 liters per hour (50,000 gal/hr). There is no correlation between overall water use and total aluminum production for a plant as a whole; however, correlations can be developed between water use or wastewater discharge and production on a process basis. This is discussed further in Section V.

Sixty plants reported some form of treatment for wastewater from aluminum forming processes. Another 13 plants mentioned treatment only for wastes not covered under the aluminum forming category. The most common forms of wastewater treatment are pH

adjustment, clarification, gravity oil separation (skimming), and lagoons. Recirculation including in-line filtration and cooling towers are frequently used as wastewater controls. Other flow reduction techniques demonstrated include countercurrent cascade and spray rinsing. Oily wastes are separated into oil and water fractions by emulsion breaking using heat or chemicals. Gravity separation is frequently used to separate neat oil and broken emulsions from the water fraction. The oil portion is usually removed by a contractor, although some plants dispose of it by land application, incineration, or lagooning. Wastewater treatment sludges generally are not thickened, but are disposed of without treatment; however, vacuum and pressure filters, centrifuges, and drying beds are occasionally used. Sludge disposal methods include landfill and contractor removal. Disposal of wastewater is being accomplished by discharge to surface waters or a POTW, by contractor removal, or by land application.

DESCRIPTION OF ALUMINUM FORMING PROCESSES

Aluminum forming processes, for the purpose of this guideline, are those manufacturing operations in which aluminum or aluminum alloys are shaped into semifinished or mill products by hot or cold working. An aluminum alloy is defined, for the purposes of this regulation, as any metal in which aluminum is the major component by percent composition. Frequently used alloying materials include silicon, zinc, copper, manganese, iron, magnesium, titanium, and nickel. The content of these alloying materials in aluminum generally ranges from 3 to 12 percent. Alloys are formulated to produce a metal with improved characteristics such as good machinability, hardness, strength, high resistance to corrosion, and good castability.

The manufacturing operations, called core operations (see Section IV), include rolling, extruding, forging and drawing of aluminum. Associated processes, called ancillary operations, such as the casting of aluminum alloys for subsequent forming, heat treatment, cleaning, and etching are also included.

Water is used in combination with oil lubricants, surface processing chemicals, and in contact cooling as a part of these operations in order to achieve specified desired metal characteristics (i.e., tensile strength, malleability, specific surface properties). Water may also be used in wet air pollution control devices (i.e., wet scrubbers, electrostatic precipitators) to collect fumes and particulates. A further discussion of wastewater sources from aluminum forming processes is presented in Section V. Regulatory flow allowances for waste streams under BPT, BAT, NSPS, and pretreatment standards are presented and discussed in Sections IX, X, XI, and XII respectively.

EPA recognizes that plants sometimes combine non-aluminum forming process and nonprocess wastewater prior to treatment and discharge. Pollutant discharge allowances will be established only for aluminum forming process wastewater, not the non-aluminum process or non-process wastewaters under this regulation. The flows and wastewater characteristics for these other waste streams are a function of the plant operations, layout, and water handling practices. As a result, the pollutant discharge effluent limitation for non-aluminum forming wastewater streams will be prepared by the permitting or control authority on a case-by-case basis. These wastewaters are not further discussed in this document or covered by the regulation.

Core Operations

Rolling. The rolling process is used to transform cast aluminum ingot into any one of a number of intermediate or final products. Pressure exerted by the rollers as aluminum is passed between them reduces the thickness in the metal and may cause work hardening. Square ingots cast by the direct chill method described previously are often used in the production of wire, rod, and bar. The ingots are usually reduced by hot rolling to elongated forms, known as blooms. Additional hot or cold rolling may be used to produce rod, bar, or wire. Rod is defined as having a solid round cross section 0.95 cm (3/8 inch) or more in diameter. Bar is also identified by a cross section with 0.95 cm (3.8 inch) or more between two parallel sides, but it is not round. Wire is characterized by a diameter of less than 0.95 cm (3/8 inch).

Although the design of rolling mills varies considerably, the principle behind the process is essentially the same. At the rolling mill, aluminum is passed through a set of rolls that reduces the thickness of the metal and increases its length. Two common roll configurations are shown in Figure III-3. Multiple passes through the rolls are usually required, and mills are frequently designed to allow rolling in the reverse direction. For wire, rod, and bar products, grooves in the upper and lower rolls account for the various reductions in cross sectional area.

At sheet mills, ingots are heated to temperatures ranging from 400° to 500°C and hot rolled to form slabs. Hot rolling is usually followed by further reduction of thickness on a cold rolling mill. The hot rolled product is generally limited to plate typically defined as being greater than or equal to 6.3 mm (0.25 inch) thick. Cold rolled products are classified as sheet from 6.3 to 0.15 mm (0.249 to 0.007 inch) thick and foil below 0.15 mm (0.006 inch) thick.

As will be discussed later in this section, heat treatment is usually required before and between stages of the rolling process. Ingots are usually made homogeneous in grain structure prior to hot rolling in order to remove the effects of casting on the aluminum's mechanical properties. Annealing is typically required between passes or after cold rolling to keep the metal ductile and remove the effects of work hardening. The kind and degree of heat treatment applied depends on the alloy involved, the nature of the rolling operation, and the properties desired in the product.

It is necessary to use a cooling and lubricating compound during rolling to prevent excessive wear on the rolls, to prevent adhesion of aluminum to the rolls, and to maintain a suitable and uniform rolling temperature. Oil-in-water emulsions, stabilized with emulsifying agents such as soaps and other polar organic materials, are used for this purpose in hot rolling operations. Emulsion concentrations usually vary between 5 and 10 percent oil. Evaporation of the lubricant as it is sprayed on the hot metal serves to cool the rolling process. Mist eliminators may be used to recover rolling emulsions that are dispersed to the atmosphere. The emulsions are typically filtered to remove metal fines and other contaminants and recirculated through the mills. The use of deionized water to replace evaporative and carryover losses and the addition of bactericides and antioxidizing agents are practiced at many plants to increase the life of the emulsions. Nevertheless, the emulsions eventually become rancid or degraded and must be eliminated from circulation either by continuous bleed or periodic discharge. Most cold rolling operations use mineral oil or kerosene-based lubricants rather than water-based compounds to avoid staining the aluminum surface; however, emulsions are used for cold rolling in other countries and, to a limited extent, in the United States. As in hot rolling, mist eliminators are commonly used to collect cold rolling mists in order to recover the rolling oils for reuse.

The steel rolls used in hot and cold rolling operations require periodic machining to remove aluminum buildup and to grind away any cracks or imperfections that appear on the surface of the rolls. Although the survey of the category indicated that roll grinding with water is practiced, the use of an oil-in-water emulsion is much more common. This emulsion is usually recycled and periodically discharged after treatment with other emulsified waste streams at the plant. Some plants have demonstrated that the discharge of roll grinding emulsions can be avoided by in-line removal using magnetic separation of steel fines from the emulsion or filtration techniques. With this treatment, the emulsion can be recycled indefinitely with no bleed stream other than carryover on the rolls.

Of the plants surveyed, 57 have rolling operations. Twenty-three of these discharge wastewater directly to surface water, nine discharge indirectly through a POTW, and 25 do not discharge process wastewater. The geographical location of plants with aluminum rolling operations is presented in Figure III-4. The annual production of rolled aluminum at these plants during 1977 varied from 270 to 580,000 kkg (300 to 640,000 tons), with a mean value of 200,000 kkg (220,000 tons). The production distribution is summarized as follows: of the 45 rolling operations for which 1977 production data were available, 36 percent produced less than 18,000 kkg (20,000 tons) of aluminum and aluminum alloys; 73 percent produced less than 90,000 kkg (100,000 tons); and 90 percent produced less than 360,000 kkg (400,000 tons).

Extrusion. In the extrusion process, high pressures are applied to a cast billet of aluminum, forcing the metal to flow through a die orifice. The resulting product is an elongated shape or tube of uniform cross-sectional area. Extrusions are manufactured using either a mechanical or a hydraulic extrusion press.

There are two basic methods of extrusion practiced in the aluminum forming category:

- direct extrusion, and
- indirect extrusion.

The direct extrusion process is shown schematically in Figure III-5. A heated cylindrical billet is placed into the ingot chamber, and the dummy block and ram are placed into position behind it. Pressure is exerted on the ram by hydraulic or mechanical means, forcing the metal to flow through the die opening. The extrusion is sawed off next to the die, and the dummy block and ingot butt are released. Hollow shapes are produced with the use of a mandrel positioned in the die opening so that the aluminum is forced to flow around it. A less common technique, indirect extrusion, is similar, except that in this method, the die is forced against the billet extruding the metal in the opposite direction through the ram stem. A dummy block is not used in indirect extrusion.

Although aluminum can be extruded cold, it is usually first heated to a temperature ranging from 375 to 525°C, so that little work hardening will be imposed on the product. Heat treatment is frequently used after extrusion to attain the desired mechanical properties. Heat treatment techniques will be described later in this section. At some plants, contact cooling of the extrusion, sometimes called press heat treatment quench, is practiced as the aluminum leaves the press. This can be done in one of three ways: with a water spray near the die, by immersion in a water tank adjacent to the runout table, or by passing the aluminum

through a water wall. A third wastewater stream which may be associated with the extrusion process is dummy block cooling water. Following an extrusion, the dummy block drops from the press and is cooled before being used again. Air cooling is most commonly used for this purpose, but water is used at a few plants to quench the dummy blocks.

The extrusion process requires the use of a lubricant to prevent adhesion of the aluminum to the die and ingot container walls. In hot extrusion, limited amounts of lubricant are applied to the ram and die face or to the billet ends. For cold extrusion, the container walls, billet surfaces, and die orifice must be lubricated with a thin film of viscous or solid lubricant. The lubricant most commonly used in extrusion is graphite in an oil or water base. A less common technique, spraying liquid nitrogen on the billet prior to extrusion, is also used. The nitrogen vaporizes during the extrusion process and acts as a lubricant.

Extrusion presses that are used to extrude hard alloys such as aircraft alloys operate under extremely high pressures. These presses frequently use an oil-water emulsion as the hydraulic fluid to reduce the risk of fires instead of neat oil used as the hydraulic fluid in other presses. Due to the nature of this hydraulic fluid and the extremely high pressures, these extrusion presses frequently develop hydraulic fluid leaks which must be treated and discharged.

The steel dies used in the extrusion process require frequent dressing and repairing to ensure the necessary dimensional precision and surface quality of the product. The aluminum that has adhered to the die orifice is typically removed by soaking the die in a caustic solution. The aluminum is dissolved and later precipitated as aluminum hydroxide. The caustic bath is followed by a water rinse of the dies. The rinse is frequently discharged as a wastewater stream.

In all, 163 extrusion plants were identified in this survey. Of these, 85 indicated that no wastewater is discharged from aluminum forming operations at the plant; 38 identified themselves as direct dischargers; and 40 indicated indirect discharge of the process effluent to a POTW. In subsequent investigation of extrusion practices, it became apparent that these figures may be misleading. At many of the extrusion plants contacted, personnel did not realize that die cleaning rinse water was considered to be an aluminum forming wastewater stream as defined in this study. For this reason, some of the plants classified as zero discharge are believed to be discharging this effluent stream either to surface waters or to a POTW.

The geographical locations of the extrusion plants are shown in Figure III-6. Annual production of extruded products from these plants ranged between 6.8 and 68,000 kkg (7.5 and 75,000 tons) in 1977. The production distribution is summarized as follows: of the 157 extrusion operations for which 1977 production data were available, 58 percent produced less than 4,500 kkg (5,000 tons) of aluminum and aluminum alloys; 81 percent produced less than 9,000 kkg (10,000 tons); and 92 percent produced less than 18,000 kkg (20,000 tons).

Forging. Forging is a process in which aluminum is formed, usually hot, into shapes by employing compressive forces. The actual forging process is a dry operation. There are four basic methods of forging practiced in the aluminum forming category:

- Closed die forging,
- Open die forging,
- Rolled ring forging, and
- Cold impact extruding.

In each of these techniques, pressure is exerted on dies or rolls, forcing the heated stock to take the desired shape. The first three methods are shown schematically in Figure III-7.

Closed die forging, the most prevalent method, is accomplished by hammering or squeezing the aluminum between two steel dies, one fixed to the hammer or press ram and the other to the anvil. Forging hammers, mechanical presses, and hydraulic presses can be used for the closed die forging of aluminum alloys. The heated stock is placed in the lower die and, by one or more blows of the ram, forced to take the shape of the die set. In closed-die forging, aluminum is shaped entirely within the cavity created by these two dies. The die set comes together to completely enclose the forging, giving lateral restraining to the flow of the metal.

The process of open die forging is similar to that described above, but in this method, the shape of the forging is determined by manually turning the stock and regulating the blows of the hammer or strokes of the press. Open die forging requires a great deal of skill and only simple, roughly shaped forgings can be produced. Its use is usually restricted to items produced in small quantities and to development work where the cost of making closed type dies is prohibitive.

The process of rolled ring forging is used in the manufacture of seamless rings. A hollow cylindrical billet is rotated between a mandrel and pressure roll to reduce its thickness and increase its diameter.

The process of impact extruding is performed by placing a cut-off piece of aluminum in a bottom die. A top die consisting of a round or rectangular punch and fastened to the press ram is driven into the aluminum slug, causing the aluminum to be driven up around the top punch. Usually, the aluminum adheres to the punch and must be stripped off as the press ram rises.

Proper lubrication of the dies is essential in forging aluminum alloys. Collodial graphite in either a water or an oil medium is usually sprayed onto the dies for this purpose. Particulates and smoke may be generated from the partial combustion of oil-based lubricants as they contact the hot forging dies. In those cases, air pollution controls may be required. Baghouses, wet scrubbers, and commercially available dry scrubbers are in use at aluminum forming facilities.

Forging of aluminum alloys is practiced at 16 plants located as shown in Figure III-8. Of those plants, 12 discharge aluminum forming wastewater indirectly to a POTW, and the remaining four plants have no discharge of process wastewater. The production distribution is summarized as follows: of the 15 forging operations for which 1977 production data were available, 67 percent produced less than 900 kkg (1,000 tons) of aluminum and aluminum alloys; 80 percent produced less than 4,500 kkg (5,000 tons); and 87 percent produced less than 9,000 kkg (10,000 tons).

Drawing. The term drawing, when it applies to the manufacture of tube, rod, bar, or wire, refers to the pulling of metal through a die or succession of dies to reduce its diameter, alter the cross sectional shape, or increase its hardness. In the drawing of aluminum tubing, one end of the extruded tube is swaged to form a solid point and then passed through the die. A clamp, known as a bogie, grips the swaged end of tubing, as shown in Figure III-9. A mandrel is then inserted into the die orifice, and the tubing is pulled between the mandrel and die, reducing the outside diameter and the wall thickness of the tubing. Wire, rod, and bar drawing is accomplished in a similar manner, but the aluminum is drawn through a simple die orifice without using a mandrel.

In order to ensure uniform drawing temperatures and avoid excessive wear on the dies and mandrels used, it is essential that a suitable lubricant be applied during drawing. A wide variety of lubricants are used for this purpose. Heavier draws, which have a higher reduction in diameter, may require oil-based lubricants, but oil-in-water emulsions are used for many applications. Soap solutions may also be used for some of the lighter draws. Drawing oils are usually recycled until their lubricating properties are exhausted.

Intermediate annealing is frequently required between draws in order to restore the ductility lost by cold working of the drawn product. Degreasing of the aluminum may be required to prevent burning of heavy lubricating oils in the annealing furnaces.

Of the plants surveyed, 77 are involved in the drawing of tube, wire, rod, and bar. The geographical location of these plants is shown in Figure III-10. No aluminum forming wastewater is discharged at 51 of the plants. Of the remainder, 10 discharge directly to surface water, and 16 discharge indirectly to a POTW. The production distribution is summarized as follows: of the 57 drawing operations for which 1977 production data were available, 46 percent produced less than 900 kkg (1,000 tons) of aluminum and aluminum alloys; 74 percent produced less than 4,500 kkg (5,000 tons); and 82 percent produced less than 9,000 kkg (10,000 tons).

Sawing. Sawing may be required for a number of aluminum forming processes. Before ingots can be used as stock for rolling or extrusion, the ingot may require scalping or sawing to a suitable length. Following processes such as rolling, extrusion, and drawing, the aluminum products may be sawed. The circular saws and band saws used generally require a cutting lubricant in order to minimize friction and act as a coolant. Oil-in-water emulsions or mineral-based oils are usually applied to the sides of the blade as a spray. In some cases, a heavy grease or wax may be used as a saw lubricant. Normally, saw oils are not discharged as a wastewater stream. The lubricants frequently are carried over on the product or removed together with the saw chips for reprocessing. In some cases; however, recycle and discharge of a low-volume saw lubricant stream is practiced.

Swaging. Swaging is a forming operation frequently associated with drawing. Swaging is often the initial step in drawing tube or wire. By repeated blows of one or more pairs of opposing dies, a solid point is formed. The point is then inserted through the drawing die and gripped. In a few cases, swaging is used in tube forming without a subsequent drawing operation. Some lubricants, such as waxes and kerosene, may be used to prevent adhesion of the metal or oxide on the swaging dies.

Ancillary Operations

Casting. Before aluminum alloys can be used for rolling or extrusion, and subsequently for other aluminum forming operations, they are usually cast into ingots of suitable size and shape. Although ingots may be prepared at smelters or other forming plants, 85 of the 277 plants surveyed indicated that casting is done on site. In addition, 30 of the 31 primary aluminum plants surveyed in the nonferrous metals study indicated

that some form of casting is done on site. Nine of these plants fall into both the aluminum forming and nonferrous metals categories. Therefore, 106 primary reduction, secondary aluminum and aluminum forming plants have casting operations on site.

The equipment and methods of casting used at aluminum forming plants are the same as those employed by primary and many secondary plants, and the water requirements and waste characteristics are also very similar. Casting done at a plant which does both primary aluminum reduction and aluminum forming will be subject to the casting limitations for primary aluminum if they cast the aluminum directly without cooling. If the aluminum is a remelted primary aluminum product then the casting subsequent to the remelting will be subject to the aluminum forming limitations.

The aluminum alloys used as the raw materials for casting operations are sometimes purchased from nearby smelters and transported to the forming plants in the molten state. Usually, however, purchased aluminum ingots are charged together with alloying elements into melting furnaces at the casting plants. Several types of furnaces can be used, but reverberatory furnaces are the most common. The melting temperatures used range from 650 to 750°C.

At many plants, fluxes are added to the metal in order to reduce hydrogen contamination, remove oxides, and eliminate undesirable trace elements. Solid fluxes, such as hexachloroethane, aluminum chloride, and anhydrous magnesium chloride, may be used, but it is more common to bubble gases such as chlorine, nitrogen, argon, helium, and mixtures of chlorine and inert gases through the molten metal. Fluxing is accomplished by inserting a long, perforated "lance" into the molten liquid and pumping the gas through it. This forces the oxides of aluminum back up to the surface. The oxides form on top of the molten metal while it stands in the crucibles and after it is poured into the furnace, and--being heavier than pure aluminum--the oxides sink down into the molten metal. Bubbles in the fluxing material surround the aluminum oxides and carry them up to the surface, where it can be skimmed off with big, long-handled rakes.

After alloying and fluxing, the metal is allowed to flow into a second or "holding" compartment of the furnace, which acts as a reservoir. When the reservoir of molten metal is sufficiently full the metal may be drawn off to be cast.

Certain complex reactions occur in the furnace itself and, as a result, some hydrogen gas is trapped in the molten metal. For this reason, just before it moves from the charging furnace to the holding furnaces, the metal is "degassed" by introducing a combination of nitrogen and chlorine gas, or chlorine gas alone,

or other chemicals. Although similar to fluxing in its description, degassing has an entirely different purpose but both may occur in the same operation.

The fluxing and degassing operations are not the same as the demagging process used in the manufacture of secondary aluminum. Like degassing and fluxing, demagging involves bubbling of chlorine gas through molten aluminum, however the constituent to be removed through demagging is primarily magnesium. Thus, the demagging process is a refining process which frequently requires significantly more chlorine than degassing or fluxing and some type of wet air pollution control.

One of the problems associated with furnace degassing with chlorine is the need for air pollution control. If the alloy being treated does not contain magnesium, the chlorine gas will react to form aluminum chloride, which exists as a dense, white smoke. The presence of hydrochloric acid in these vapors necessitates the use of wet scrubbers. For this reason, other gases or mixtures of gases may be preferred as degassing agents. In addition, a number of in-line treatment methods that eliminate the need for fluxing when degassing aluminum have recently been developed and are being adopted by the industry. For a more detailed description of these alternatives, see Section VII. One of the aluminum forming plants and four primary aluminum plants with casting operations reported using wet air pollution controls to treat fumes from their melting furnaces. Chlorine was occasionally cited as a degassing agent. If enough metal refining is taking place that large amounts of gases are being emitted and a wet scrubber is necessary, this is considered metal manufacturing and is covered under the primary or secondary aluminum subcategory of the nonferrous metals manufacturing point source category.

The casting methods used in aluminum forming can be divided into three classes:

- Direct chill casting,
- Continuous casting, and
- Stationary casting.

The process variations among these techniques affect both the metallic properties of the aluminum that is cast and the characteristics of associated wastewater streams.

<u>Direct chill casting</u> is performed at 61 aluminum forming plants and is the most widely used method of casting aluminum for subsequent forming. Direct chill casting is characterized by continuous solidification of the metal while it is being poured. The length of an ingot cast using this method is determined by

the vertical distance it is allowed to drop rather than by mold dimensions.

As shown in Figure III-11, molten aluminum is tapped from the melting furnace and flows through a distributor channel into a shallow mold. Noncontact cooling water circulates within this mold, causing solidification of the aluminum. The base of the mold is attached to a hydraulic cylinder which is gradually lowered as pouring continues. As the solidified aluminum leaves the mold, it is sprayed with contact cooling water to reduce the temperature of the forming ingot. The cylinder continues to descend into a tank of water, causing further cooling of the ingot as it is immersed. When the cylinder has reached its lowest position, pouring stops and the ingot is lifted from the pit. The hydraulic cylinder is then raised and positioned for another casting cycle.

In direct chill casting, lubrication of the mold is required to ensure proper ingot quality. Lard or castor oil is usually applied before casting begins and may be reapplied during the drop. Much of the lubricant volatilizes on contact with the molten aluminum, but contamination of the contact cooling water with oil and oil residues does occur.

The production distribution is summarized as follows: of the 56 direct chill casting operations for which 1977 production data were available, 52 percent produced less than 23,000 kkg (25,000 tons) of aluminum and aluminum alloys; 73 percent produced less than 45,000 kkg (50,000 tons); and 89 percent produced less than 180,000 kkg (200,000 tons). Direct chill casting is also performed by 27 primary aluminum plants covered in the nonferrous metals survey. A comparison of production information was made using production capacity from the two data sets, since the primary aluminum data was not from 1977. Of the 18 reduction plants supplying production capacity data, 28 percent produce less than 90,000 kkg (100,000 tons); 78 percent produce less than 180,000 kkg (200,000 tons); and 94 percent produce less than 227,000 kkg (250,000 tons).

Continuous casting is practiced at 15 plants in the aluminum forming category instead of, or in addition to, direct chill casting methods. Unlike direct chill casting, no restrictions are placed on the length of the casting, and it is not necessary to interrupt production to remove the cast product. The use of continuous casting eliminates or reduces the degree of subsequent rolling required.

A relatively new technology, continuous casting of aluminum first came into practice in the late 1950's. Since then, improvements and modifications have resulted in the increased use of this pro-

cess. Current applications include the casting of plate, sheet, foil, and rod. Because continuous casting affects the mechanical properties of the aluminum cast, the use of continuous casting is limited by the alloys used, the nature of subsequent forming operations, and the desired properties of the finished product. In applications where continuous casting can be used, the following advantages have been cited:

- Increased flexibility in the dimensions of the cast product;

- Low capital costs, as little as 10 to 15 percent of the cost of conventional direct chill casting and hot rolling methods; and

- Low energy requirements, reducing the amount of energy required to produce comparable products by direct chill casting and rolling methods by 35 to 80 percent, depending on the product being cast.

In addition, the use of continuous casting techniques has been found to significantly reduce or eliminate the use of contact cooling water and oil lubricants.

A number of different continuous casting processes are currently being used in the category. Although the methods vary somewhat, they are similar in principle to one of the three processes diagrammed schematically in Figure III-12. The most common method of continuous sheet casting, shown in Figure III-12A, substitutes a single casting process for the conventional direct chill casting, scalping, heating, and hot rolling sequence. The typical continuous sheet casting line consists of melting and holding furnaces, a caster, pinch roll, shear, bridle, and coiler. Molten aluminum flows from the holding furnace through a degassing chamber or filter to the caster headbox. The level of molten aluminum maintained in the headbox causes the metal to flow upwards through the top assembly, which distributes it uniformly across the width of the casting rolls. The aluminum solidifies as it leaves the tip and is further cooled and solidified as it passes through the internally water-cooled rolls. It leaves the caster as a formed sheet and successively passes through pinch rolls, a shear, and a tension bridle before being wound into a coil. The cooling water associated with this method of continuous sheet casting never comes into contact with the aluminum metal.

Another method of casting continuous aluminum sheet is shown in Figure III-12B. This process is not very common and is limited due to the mechanical properties of the sheet produced. Molten aluminum is poured into a rotating perforated cylinder. The

droplets formed are air cooled and solidify as they fall. At this point, the pellets may either be removed for temporary storage or charged directly to a preheated chamber, hot rolled into sheet, and coiled. This unique process design not only eliminates the use of contact cooling water, but also results in considerable reductions in the amount of noncontact cooling water required in the production of sheet.

Several methods of rod casting, similar to the one shown in Figure III-12C, are currently being used to produce aluminum rod. Typically, continuous rod is manufactured on an integrated casting and rolling line consisting of a wheel belt caster, pinch roll, shear, rolling trains, and a coiler. A ring mold is set into the edge of the casting wheel. The mold is bound peripherally by a continuous belt which loops around the casting wheel and an associated idler wheel. As the casting wheel rotates, aluminum is poured into the mold and solidifies. After a rotation of approximately 180°, the belt separates from the mold, releasing the still pliable aluminum bar. The bar then enters directly into an in-line rolling mill, where it is rolled into rod and coiled. Noncontact cooling water circulating within the casting wheel is used to control the temperature of the ring mold. Cooling of the belt is, for the most part, also accomplished by noncontact water, though some plants indicated that contact with the aluminum bar as it leaves the mold is difficult to avoid. Some models are actually designed so that cooling water circulates within the interior of the wheel and then flows over the freshly cast bar and onto the belt as the belt separates from the ring mold. Because continuous casting incorporates casting and rolling into a single process, rolling lubricants may be required. Frequently, oil emulsions similar to those used in conventional hot rolling are used for this purpose. Graphite solutions may be suitable for roll lubrication of some continuous casting processes. In other instances, aqueous solutions of magnesia are used.

The production distribution is summarized as follows: of the 14 continuous casting operations for which 1977 production data were available, 57 percent produced less than 18,000 kkg (20,000 tons) of aluminum and aluminum alloys; 71 percent produced less than 27,000 kkg (30,000 tons); and 100 percent produced less than 36,000 kkg (40,000 tons). Five plants in the primary aluminum industry have continuous casting. Production was compared using the production capacity rather than actual production since 1977 production was not available. Of the four plants supplying production capacity data, one plant has a capacity less than 22,700 kkg (25,000 tons); two plants have a capacity of 45,000 kkg (50,000 tons) or less; and no plant has a capacity above 68,000 kkg (75,000 tons).

Stationary casting of aluminum ingots is practiced at 16 aluminum plants, usually to recycle in-house aluminum scrap. The production distribution is summarized as follows: of the 10 stationary casting operations for which 1977 production data were available, 50 percent produced less than 1,800 kkg (2,000 tons) of aluminum and aluminum alloys; 70 percent produced less than 4,500 kkg (5,000 tons); and 90 percent produced less than 9,000 kkg (10,000 tons). In the stationary casting method, molten aluminum is poured into cast iron molds and allowed to air cool. Lubricants and cooling water are not required. Melting and casting procedures are dictated by the intended use of the ingots produced. Frequently, the ingots are used as raw material for subsequent aluminum forming operations at the plant. Other plants sell these ingots for reprocessing.

Heat Treatment. Heat treatment is an integral part of aluminum forming practiced at nearly every plant in the category. It is frequently used both in process and as a final step in forming to give the aluminum alloy the desired mechanical properties. The general types of heat treatment applied are the following:

- Homogenizing, to increase the workability and help control recrystallization and grain growth following casting;

- Annealing, to soften work-hardened and heat-treated alloys, relieve stress, and stabilize properties and dimensions;

- Solution heat treatment, to improve mechanical properties by maximizing the concentration of hardening constituents in solid solution; and

- Artificial aging, to provide hardening by precipitation of constituents from solid solution.

Homogenizing, annealing, and aging are dry processes, while solution heat treatment typically involves significant quantities of contact cooling water.

In the casting process, large crystals of intermetallic compounds are distributed heterogeneously throughout the ingot. Homogenization of the cast ingot provides a more uniform distribution of the soluble constituents within the alloy. By reducing the brittleness caused by casting, homogenization prepares the ingot for subsequent forming operations. The need for homogenization and the time and temperatures required are dependent on the alloy involved, the ingot size, the method of casting used, and the nature of the subsequent forming operations. Typically, the ingot is heated to a temperature ranging between 425 and 650°C

and held at that temperature for four to 48 hours. The ingots are then allowed to air cool. One plant does use a water mist to aid final cooling after homogenizing.

Annealing is used by plants in the aluminum forming category to remove the effects of strain hardening or solution heat treatment. The alloy is raised to its recrystallization temperature, typically between 350 and 400°C. Nonheat-treatable, strain-hardened alloys need only be held in the furnace until the annealing temperature is reached; heat-treatable alloys usually require a detention time of two or three hours. In continuous furnaces, the metal is raised to higher temperatures (i.e., 425 to 450°C) and detained in the furnace for 30 to 60 seconds. Once removed from the annealing furnace, it is essential that the heat-treatable alloys be cooled to 250°C or lower at a slow, controlled rate. After annealing, the aluminum is in a ductile, more workable condition suitable for subsequent forming operations. One plant reported that a water seal was used on its annealing furnace to maintain the inert atmosphere in the annealing furnace. Water circulates through a fibrous material which provides the seal between the furnace door and the frame. The purpose of the water is to prevent scorching of the seal material. Some of the water does pass through the fibrous material and contacts the metal; however, this water evaporates on contact. After discussions with the plant and the furnace vendor, it was concluded that the furnace seal water is a noncontact cooling water stream.

Solution heat treatment is accomplished by raising the temperature of a heat-treatable alloy to the eutectic temperature, where it is held for the required length of time, then quenched rapidly. As a result of this process, the metallic constituents in the alloy are held in a super-saturated solid solution, improving the mechanical properties of the alloy. The metal temperatures recommended for solution heat treatment of formed aluminum alloys typically range from 450 to 550° C. The required length of time the metal must be held at this temperature varies from one to 48 hours. In the case of extrusion, certain aluminum alloys can be solution heat treated immediately following the extrusion process. In this procedure, known as press heat treatment, the metal is extruded at the required temperatures and quenched with contact cooling water as it emerges from the die or press.

The quenching techniques used in solution heat treatment are frequently critical in achieving the desired mechanical properties. The sensitivity of alloys to quenching varies, but delays in transferring the product from the furnace to the quench, a quenching rate that is incorrect or not uniform, and the quality of the quenching medium used can all have serious detrimental

effects. With few exceptions, contact cooling water is used to quench solution heat treated products. Immersion quenching in contact cooling water, typically ranging from 65 to 100°C, is used for most aluminum formed products. Forgings are also quenched at cooler temperatures (i.e., 60 to 70°C). Spray or flush quenching is sometimes used to quench thick products. Solution heat treated forgings of certain alloys can be quenched using an air blast rather than a water medium. Air quenching can also be used for certain extrusions following press heat treatment. Immersion quenching using glycol is often found in the manufacture of high-performance aeronautical components. This quenching technique is critical for achieving desired mechanical properties, and its use may increase as the demand for high-quality parts goes up.

Artificial aging, also known as precipitation heat treatment, is applied to some aluminum alloys in order to cause precipitation of super-saturated constituents in the metal. The alloy is heated to a relatively low temperature (i.e., 120 to 200° C) for several hours and then air cooled. Artificial aging is frequently used following solution heat treatment to develop the maximum hardness and ultimate tensile and yield strength in the metal. For certain alloys, the mechanical properties are maximized by sequentially applying solution heat treatment, cold working, and artificial aging.

At elevated temperatures, the presence of water vapors can disrupt the oxide film on the surface of the product, especially if the atmosphere is also contaminated with ammonia or sulfur compounds. Possible detrimental effects include surface blistering, porosity, discoloration, and a decrease in tensile properties. When this occurs, it is necessary to control the atmosphere within a heat treatment furnace. A number of techniques can be used to control the atmosphere. At some aluminum forming plants, natural gas is burned to generate an inert atmosphere. The resulting flue gases are cooled to remove moisture and are introduced to the heat treatment furnace. Under the proper conditions, the same fuel that heats the furnace can be used for this purpose. Because of the high sulfur content in most furnace fuels; however, the off-gases may require treatment by wet scrubbers before they can be used as inert atmosphere for heat treatment.

Cleaning or Etching. A number of chemical or electrochemical treatments may be applied after the forming of aluminum or aluminum alloy products. Acid and alkaline solutions, and detergents can be used to clean soils such as oil and grease from the aluminum surface. Acid and alkaline solutions can also be used to etch the product or brighten its surface. Deoxidizing and desmutting are accomplished with acid solutions. Surface

treatments and their associated rinses are usually combined in a single line of successive tanks. Wastewater discharge from these lines is typically commingled prior to treatment or discharge. In some cases, rinse water from one treatment is reused in the rinse of another.

These treatments may be used for cleaning purposes, to provide the desired finish for an aluminum formed product, or they may prepare the aluminum surface for subsequent coating. A number of different terms are commonly used in referring to sequences of surface treatments (e.g., pickling lines, cleaning lines, etch lines, preparation lines, and pretreatment lines). The terminology depends, to some degree, on the purpose of the lines, but usage varies within the industry. In addition, the characteristics of wastewater generated by surface treatment is determined by the unit components of the treatment lines rather than the specific purpose of its application. In order to simplify discussion, the term cleaning or etching is used in this document to refer to any surface treatment processes other than solvent cleaning.

Surface treatment operations performed as an integral part of the forming process are considered to be within the scope of the aluminum forming category. For the purposes of this regulation, surface treatment of aluminum is considered to be an integral part of aluminum forming whenever it is performed at the same plant site at which aluminum is formed.

Solvent Cleaning. Solvent cleaners are used to remove oil and grease compounds from the surface of aluminum products. This process is usually used to remove cold rolling and drawing lubricants before products are annealed, finished, or shipped. There are three basic methods of solvent cleaning: vapor degreasing, cold cleaning, and emulsified solvent degreasing.

Vapor degreasing, the predominant method of solvent cleaning in the aluminum forming industry, uses the hot vapors of chlorinated solvents to remove oils, greases, and waxes. In simplest form, vapor degreasing units consist of an open steel tank similar to the one shown in Figure III-13A. Solvent is heated at the bottom of a steel tank and, as it boils, a hot solvent vapor is generated. Because of its higher density, the vapor displaces air and fills the tank. Near the top of the tank, condenser coils provide a cooling zone in which the vapors condense and are prevented from rising above a fixed level. When cool aluminum forming products are lowered into the hot vapor, the solvent condenses onto the product, dissolving oils present on the surface. Vapor degreasing units may also incorporate immersion or spraying of the hot solvent for more effective cleaning. Conveyor systems

similar to the one shown in Figure III-13B are used in some applications.

The solvents most commonly used for vapor degreasing in aluminum forming are trichloroethylene, 1,1,1-trichloroethane, and perchloroethylene. Selection of the solvent depends on a number of factors, including solvent boiling point, product dimension, and alloy makeup; and the nature of the oil, grease, or wax to be removed. Stabilizing agents are usually added to the solvents.

Vapor degreasing solvents are frequently recovered by distillation. Solvents can be distilled either within the degreasing unit itself or in a solvent recovery still. The sludge residue generated in the recovery process is toxic and may be flammable. Suitable handling and disposal procedures must be followed and are discussed in subsequent sections of this report (principally in Section VII).

Cold cleaning is another solvent cleaning method and involves hand wiping, spraying, or immersion of metal parts in organic solvents to remove oil, grease, and other contaminants from the surface. A variety of solvents or solvent blends, primarily petroleums and chlorinated hydrocarbons, are used in cold cleaning. These solvents can be reclaimed by distillation either on site or by an outside recovery service. For highly contaminated solvents; however, reclamation may not be cost effective, and contract hauling is the disposal method of choice. In general, cold cleaning is not as effective as vapor degreasing treatment, but the costs are considerably lower.

Emulsified solvents can also be used to clean aluminum, but they are less efficient than pure solvents, and their use is limited to the removal of light oil and grease. Reclamation of emulsified solvents is not economically feasible at this time. Contract hauling of the spent solvents is the disposal method practiced by plants in the aluminum forming category.

Due to the toxic nature of many cleaning solvents, emission controls may be required.

Alkaline and Acid Cleaning. Alkaline cleaning is the most common method of cleaning aluminum surfaces. The alkaline solutions vary in pH and chemical composition. Inhibitors are frequently added to minimize or prevent attack on the metal. Alkaline cleaners are able to emulsify vegetable and animal oils and greases to a certain degree and are effective in the removal of lard, oil, and other such compounds. Mineral oils and grease, on the other hand, are not emulsified by alkaline cleaning solutions and, therefore, are not removed as effectively.

Aluminum products can be cleaned with an alkaline solution either by immersion or spray. The solution is usually maintained at a temperature ranging between 60 and 80° C. Rinsing, usually with warm water, should follow the alkaline cleaning process to prevent the solution from drying on the product.

Acid solutions can also be used for aluminum cleaning, but they are less effective than either alkaline or solvent cleaning systems. Their use is generally limited to the removal of oxides and smut. Acid cleaning solutions usually have a pH ranging from 4.0 to 5.7 and temperatures between room temperature and 80°C. The solutions typically contain one or two acids (e.g., nitric, sulfuric, phosphoric, chromic, and hydrofluoric acids).

Chemical and Electrochemical Brightening. The surface of aluminum or aluminum alloys can be chemically or electrochemically brightened to improve surface smoothness and reflectance. Chemical brightening is accomplished by immersing the product in baths of concentrated or dilute acid solutions. The acids most commonly used for this purpose are sulfuric; nitric; phosphoric; acetic; and, to a lesser extent, chromic and hydrofluoric. Other constituents, such as copper or lead salts, glycerol, and ethylene glycol, may be added as well.

Aluminum can also be brightened by electrochemical methods. The product is immersed in an electrolyte bath, through which direct current is passed. The electrolytic solutions are acidic, containing hydrofluoric, phosphoric, chromic, or sulfuric acid, or they may be alkaline, containing sodium carbonate or trisodium phosphate.

Etching. Chemical etchants are used to reduce or eliminate scratches and other surface imperfections, to remove oxides, or to provide surface roughness. The most widely used etchant is an aqueous solution of sodium hydroxide. The concentration and temperature of the caustic bath are carefully controlled to provide the desired degree of etching. In general, the sodium hydroxide concentration ranges from 1 to 15 percent, and the solution is maintained between 50 and 80°C. It is important that products are rinsed immediately following caustic etching.

As a result of etching with a caustic solution, the surface of the product may be discolored. Alloying constituents, such as copper, manganese, and silicon, as well as other impurities in the metal, are not dissolved in the etchant and form a dark residual film referred to as smut. In order to alleviate this problem, caustic etching is frequently followed by desmutting.

For specific aluminum alloys or desired finishes, acid etching may be used. Aluminum-silicon alloys are frequently etched in a

solution containing nitric and hydrofluoric acids. Fumes generated by acid etching are corrosive and may constitute a health hazard requiring suitable air pollution control. In general, etching with acids is more expensive, but it may result in less aluminum loss, which can be an economic advantage.

Desmutting and Deoxidizing. Acid solutions are used in desmutting and deoxidizing aluminum products. Desmutting, a process frequently applied following caustic etching, is accomplished by immersion in an acid solution that dissolves the residual film. Although a number of acid solutions can be used to remove smut, dilute nitric acid is most commonly employed.

Deoxidizers are acid solutions formulated to remove specific oxide films and coatings from the aluminum products. The oxides may have been formed naturally, or they may result from heat treatment or other surface treatments. Deoxidizing solutions can be composed of a variety of acids, including chromic, phosphoric, sulfuric, nitric, and hydrofluoric acid.

Anodizing. Anodizing is either a chemical or an electrolytic oxidation process which converts the surface of the metal to an insoluble oxide. These oxide coatings provide corrosion protection, decorative surfaces, a base for painting and other coating processes, as well as special electrical and mechanical properties.

The majority of anodizing is carried out by immersion of racked parts in tanks. Continuous anodizing may be done on large coils of aluminum in a manner similar to continuous electroplating. The formation of the oxide occurs (in electrolytic anodizing) when the parts are made anodic in dilute sulfuric acid or dilute chromic acid solutions. The oxide layer begins formation at the extreme outer surface, and as the reaction proceeds, the oxide grows into the metal. The last formed oxide, known as the boundary layer, is located at the interface between the aluminum and the oxide. The boundary is extremely thin and nonporous. The sulfuric acid process is typically used for all parts subject to stress or containing recesses in which the sulfuric acid solution may be retained and attack the aluminum. Chromic acid anodic coatings are more protective than sulfuric acid coatings and have a relatively thick boundary layer. For these reasons, a chromic acid bath is used if a complete rinsing of the part cannot be achieved.

Chemical Conversion Coating. This manufacturing operation includes chromating, phosphating, and passivating. These coatings are applied to previously deposited metal or basis material for increased corrosion protection, lubricity, preparation of the surface for additional coatings, or formulation of a special

surface appearance. In chromating, a portion of the aluminum is converted to one of the components of the protective film formed by the coating solution. This occurs by reaction with aqueous solutions containing hexavalent chromium and active organic or inorganic compounds. Most of the coatings are applied by chemical immersion, although a spray or brush treatment can be used.

Phosphate coatings are used to provide a good base for paints and other organic coatings, to condition the surfaces for cold forming operations by providing a base for drawing compounds and lubricants, and to impart corrosion resistance to the aluminum surface by the coating itself or by providing a suitable base for rust-preventive oils or waxes. Phosphate conversion coatings are formed by the immersion of aluminum in a dilute solution of phosphoric acid. The method of applying the phosphate coating is dependent upon the size and shape of the part to be coated. Small parts frequently are coated in barrels immersed in the phosphating solution. Large parts may be spray coated or continuously passed through the phosphating solution.

Coloring or Dyeing. Coloring or dyeing aluminum is frequently performed on anodized aluminum. The dyeing process involves impregnating the pores of the anodized aluminum with an organic material.

Mineral coloring is the precipitation of a pigment in the pores of the anodic coating before sealing.

Integral color anodizing is a single-step process in which the color is produced during anodizing. Coloring results from the occulsion of micro-particles in the coating. The electrolyte reacts with the micro-constituents and the matrix of the aluminum alloy.

Another method for coloring is a two-step or electrolytic coloring process. Following anodizing with sulfuric acid and rinsing, the aluminum parts are transferred to an acidic electrolyte which contains a dissolved metal salt. The metallic pigment is electrodeposited in the pores of the anodic coating by the use of alternating current.

Sealing. Sealing is the final surface finishing step performed in conjunction with anodizing. Sealing partially converts the alumina on the surface to an aluminum monohydroxide. Corrosion resistance of anodized aluminum is largely dependent on the effectiveness of the sealing operation. Sealing solutions may consist of boiling deionized water or nickel acetate. Precipitation of nickel hydroxide helps in plugging pores left in the anodized surface.

Aluminum anodized in sulfuric acid may be sealed in slightly acidified water (pH 5.5 to 6.5) at about 93 to 100°C (200 to 212°F). Clear anodized aluminum parts may be sealed with hot nickel acetate followed by rinsing and immersion in a hot dichromate solution.

Table III-1

PROFILE OF ALUMINUM FORMING PLANTS

Aluminum Product	Number of Plants	PRODUCTION (tons/yr) Industry Total	PRODUCTION (tons/yr) Plant Average	EMPLOYMENT Plant Average
Plate	7	6.00×10^4	8.57×10^3	852
Sheet	16	8.34×10^5	5.56×10^4	693
Strip	21	7.28×10^5	3.639×10^4	356
Foil	15	2.091×10^5	1.394×10^4	294
Tube	25	7.08×10^4	3,078	176
Rod	13	4.747×10^4	4,747	125
Wire & Cable	48	1.988×10^5	4,229	43
Extrusions	141	9.07×10^5	6.48×10^3	100
Forgings	16	1.856×10^4	1,547	94

Table III-2

PLANT AGE DISTRIBUTION BY DISCHARGE TYPE

Type of Plant Discharge	No Data	Plant Age As of 1977 (Years)									Total
		0-5	6-10	11-20	21-30	31-40	41-50	51-60	61-75	75+*	
Direct	0	1	8	17	20	11	0	1	0	1	59
Indirect	0	13	7	22	13	7	2	2	4	2	72
Zero	3	14	21	46	29	9	6	4	2	6	140
Total	3	28	36	85	62	27	8	7	6	9	271

*These plants may have installed aluminum forming operations after their initial construction.

Table III-3

DISTRIBUTION OF FACILITIES ACCORDING TO TIME ELAPSED SINCE LATEST MAJOR PLANT MODIFICATION

Type of Plant Discharge	No Data	Years Elapsed Since Latest Major Modification (As of 1977)					
		0-5	6-10	11-15	16-20	21+	Total
Direct	10	30	13	5	0	1	59
Indirect	15	38	9	2	4	4	72
Zero	34	62	24	5	9	6	140
Total	59	130	46	12	13	11	271

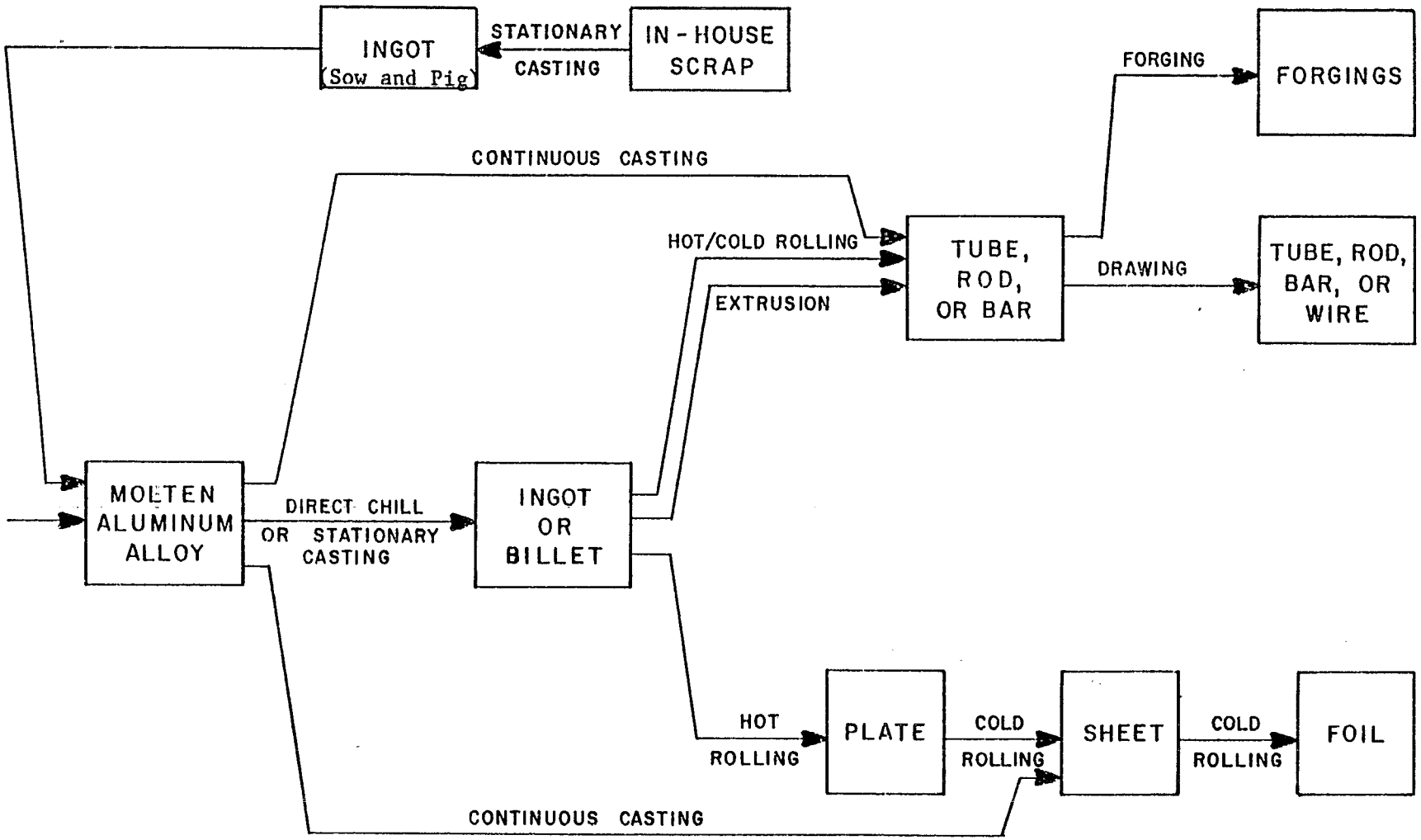

Figure III-1

ALUMINUM FORMING PRODUCTS

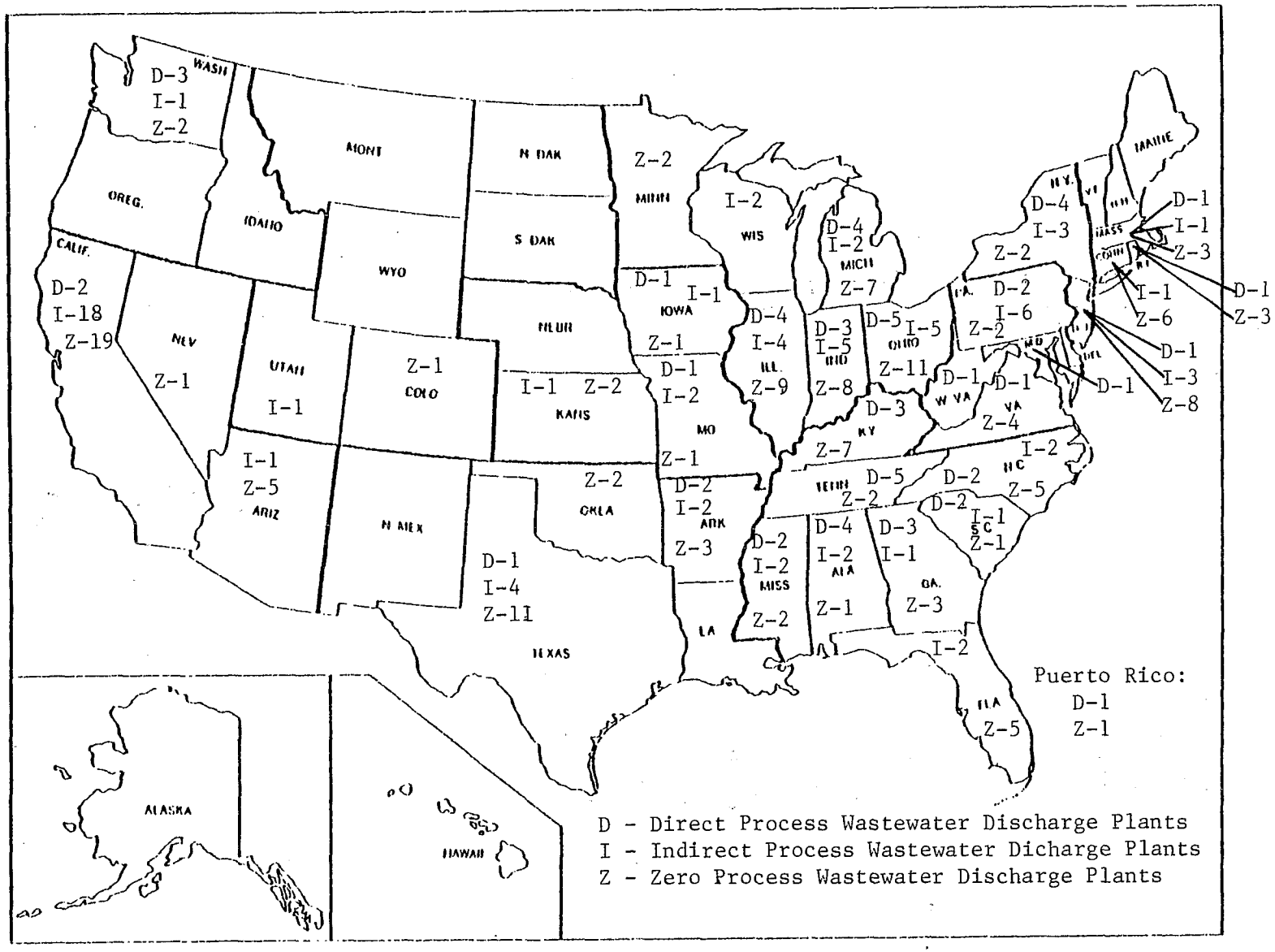

Figure III-2

GEOGRAPHICAL DISTRIBUTION OF ALUMINUM FORMING PLANTS

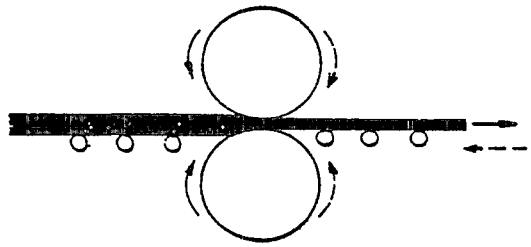

A. TWO - HIGH REVERSING MILL

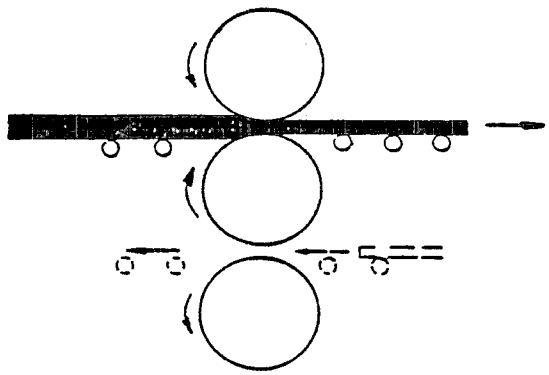

B. THREE - HIGH CONTINUOUS ROLLING MILL

Figure III-3

COMMON ROLLING MILL CONFIGURATIONS

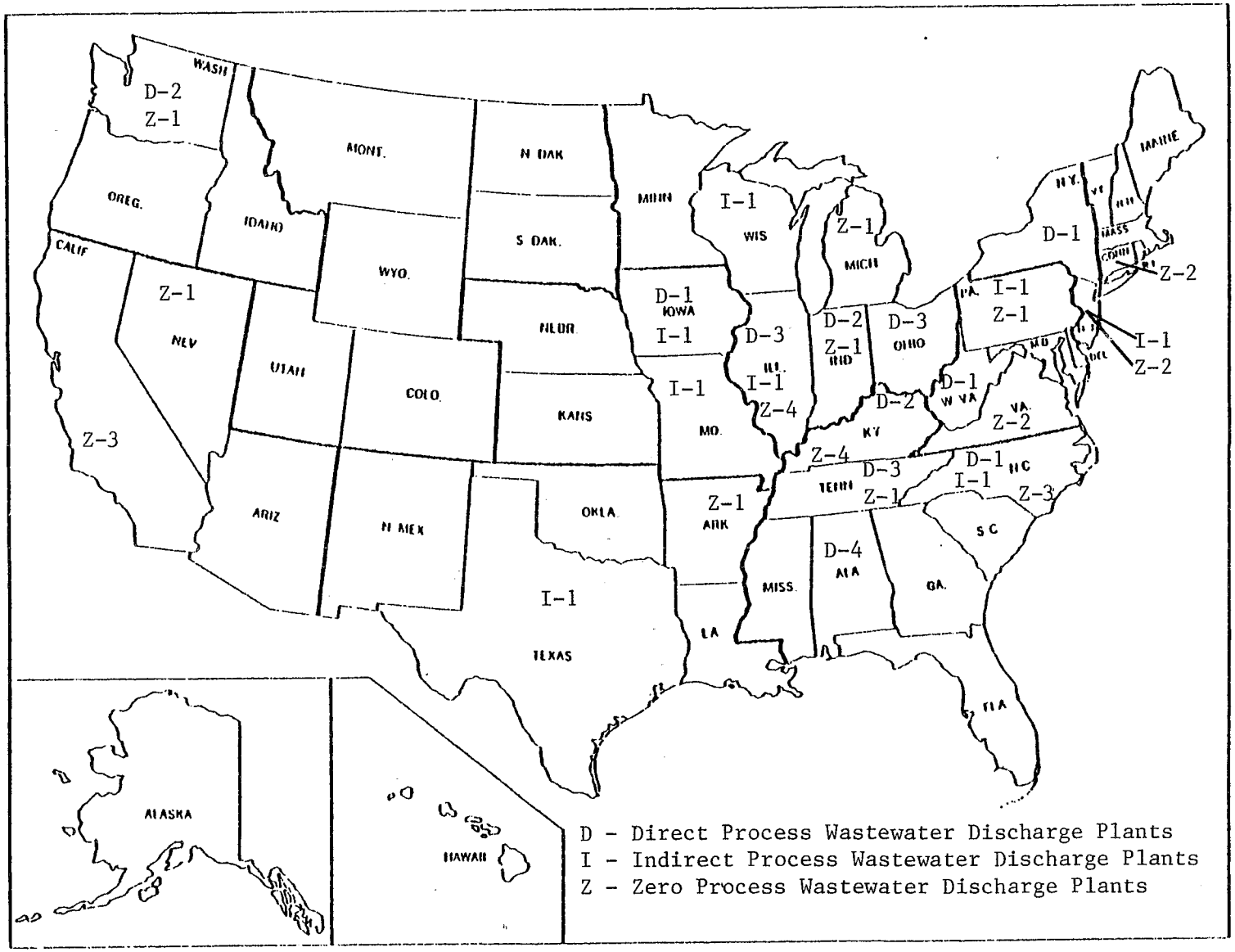

Figure III-4

GEOGRAPHICAL DISTRIBUTION OF PLANTS WITH HOT/COLD ROLLING

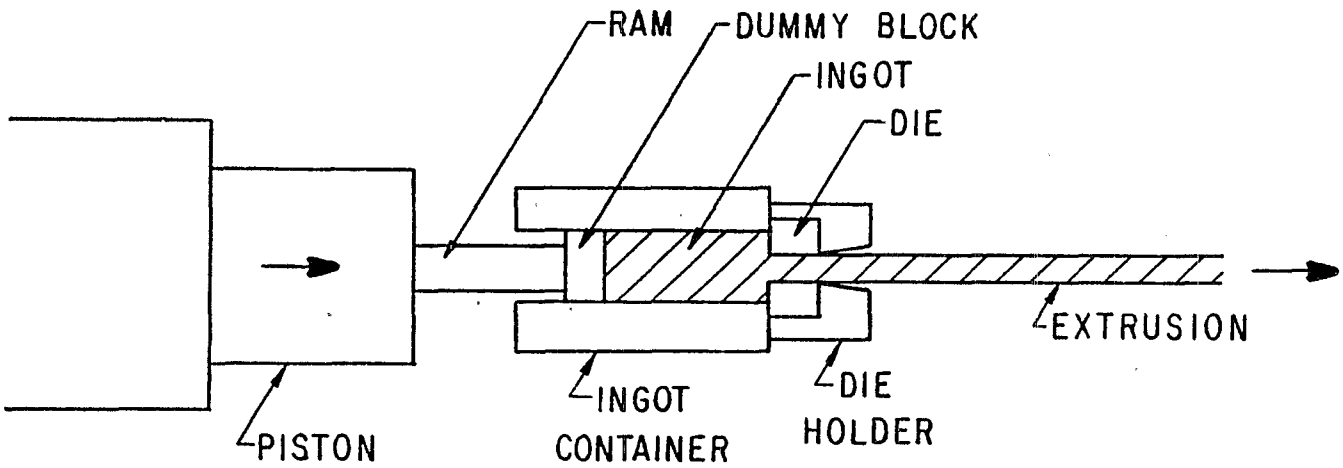

Figure III-5

DIRECT EXTRUSION

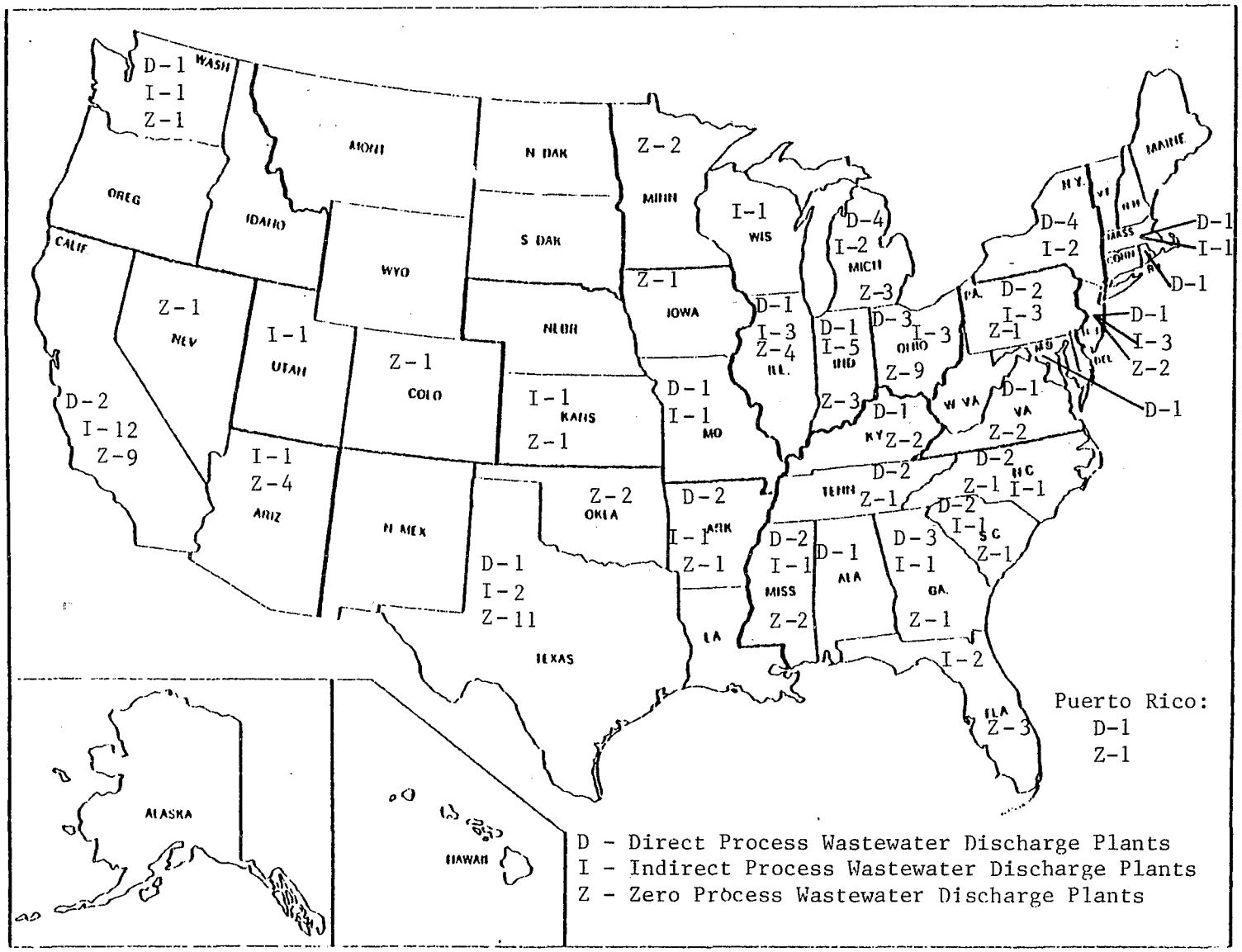

Figure III-6

GEOGRAPHICAL DISTRIBUTION OF PLANTS WITH EXTRUSION

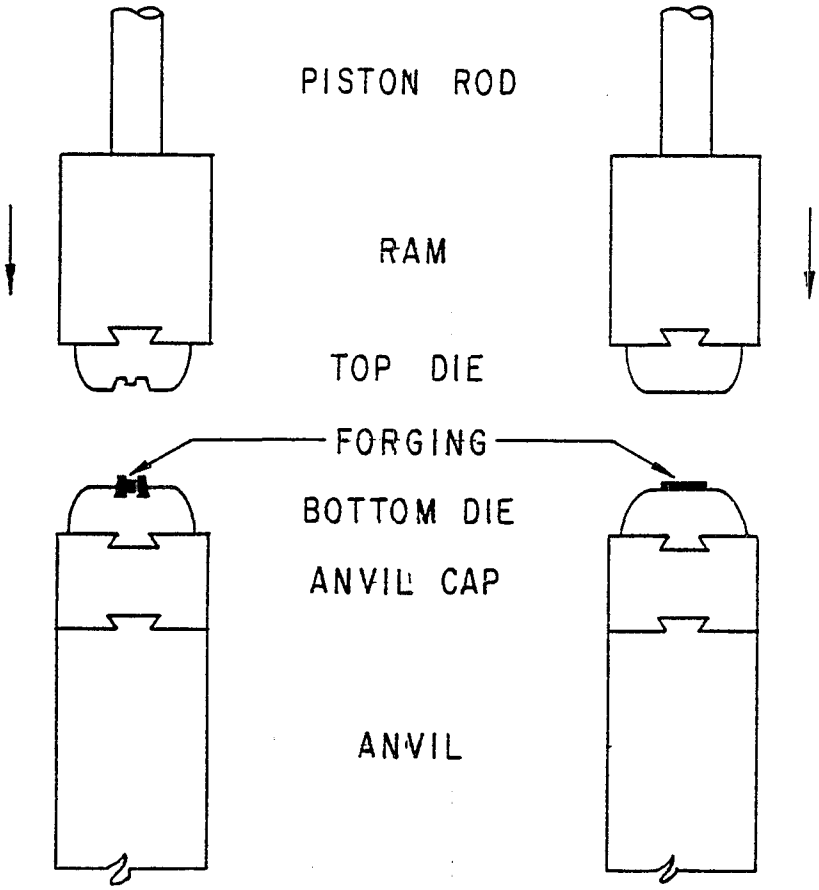

A. CLOSED DIE FORGING B. OPEN DIE FORGING

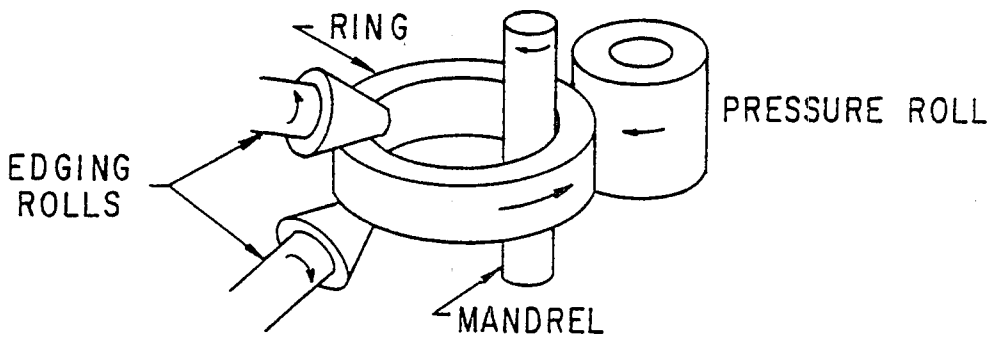

C. ROLLED RING FORGING

Figure III-7

FORGING

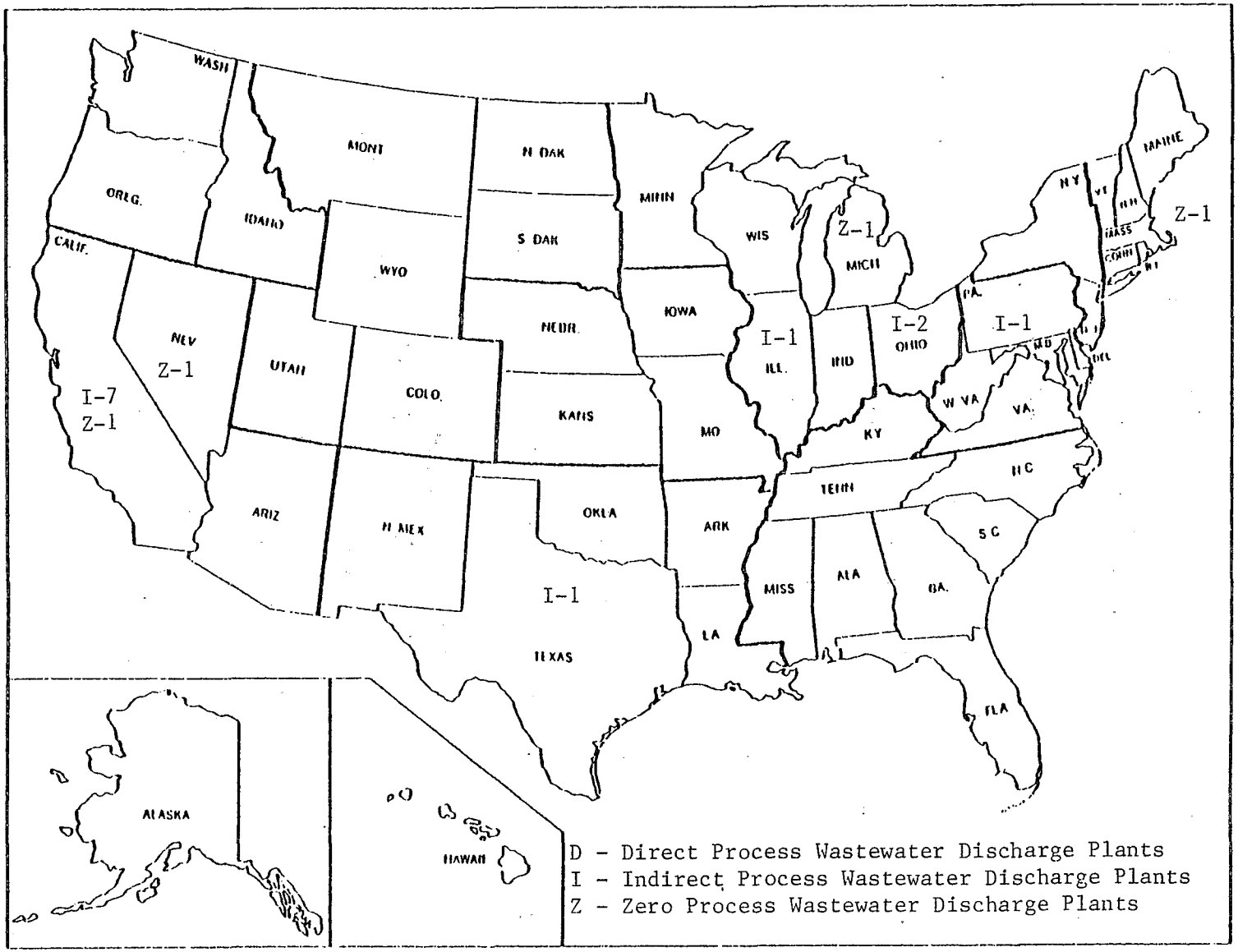

Figure III-8

GEOGRAPHICAL DISTRIBUTION OF PLANTS WITH FORGING

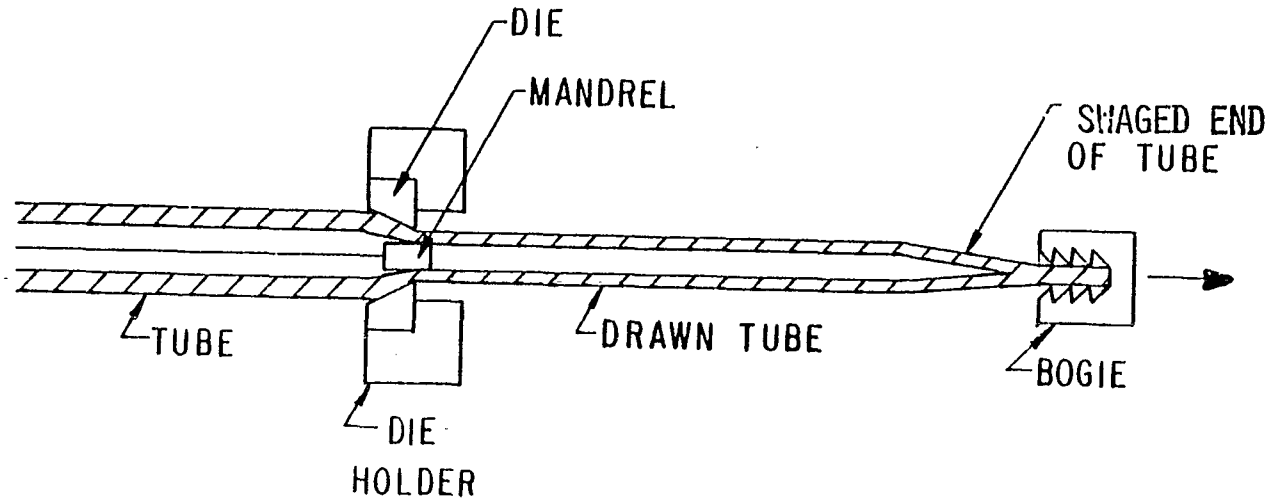

Figure III-9

TUBE DRAWING

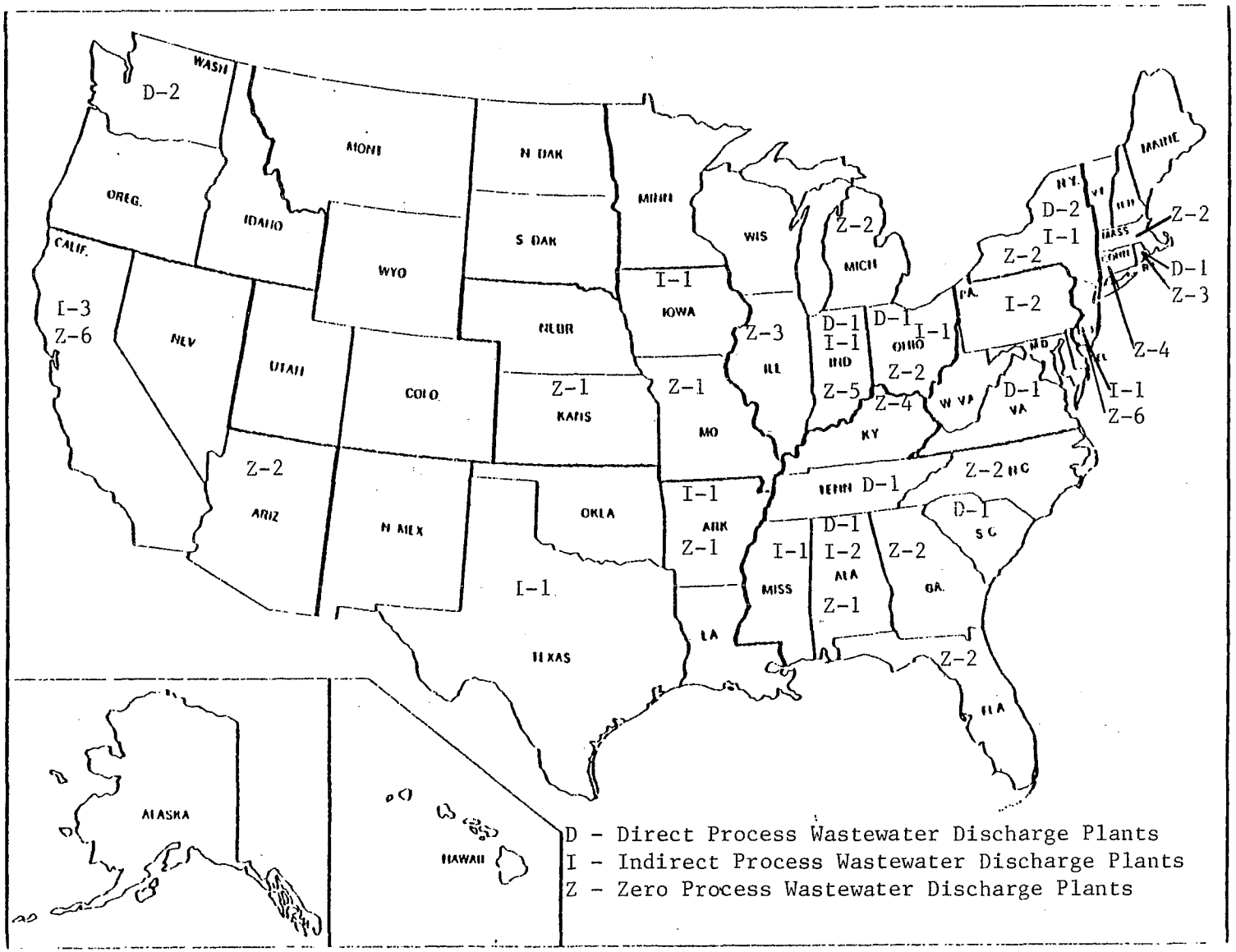

Figure III-10

GEOGRAPHICAL DISTRIBUTION OF PLANTS WITH
TUBE, WIRE, ROD AND BAR DRAWING

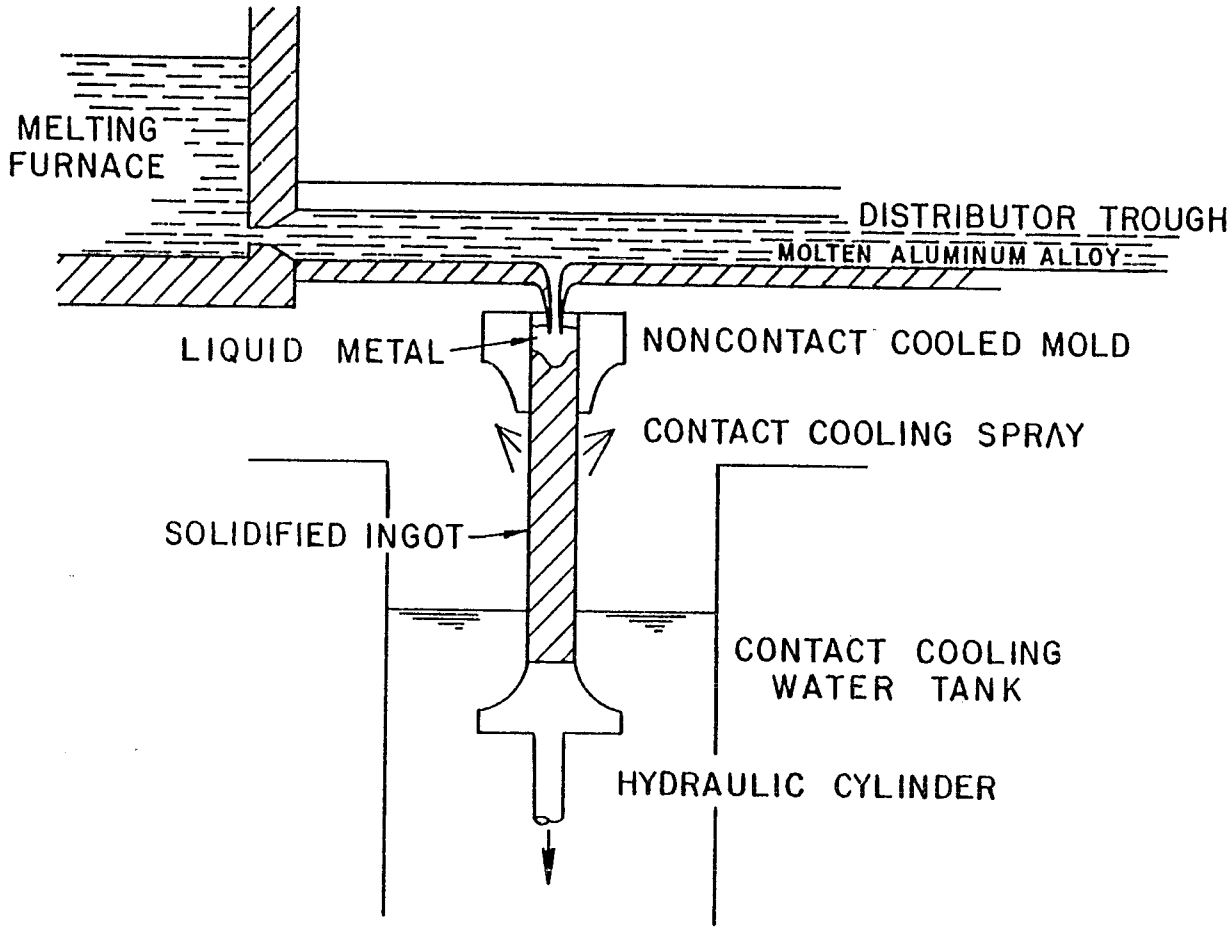

Figure III-11

DIRECT CHILL CASTING

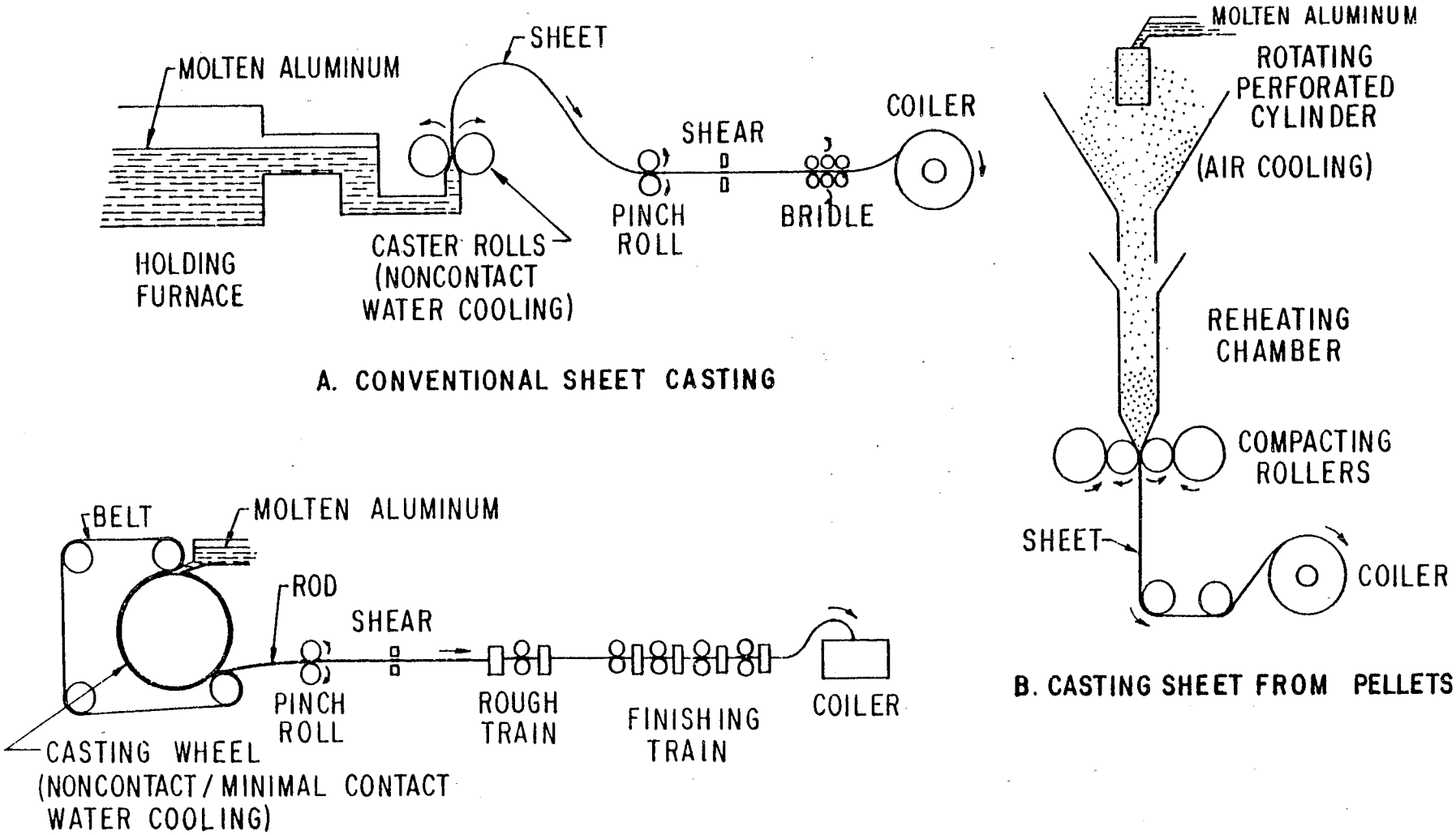

Figure III-12

CONTINUOUS CASTING

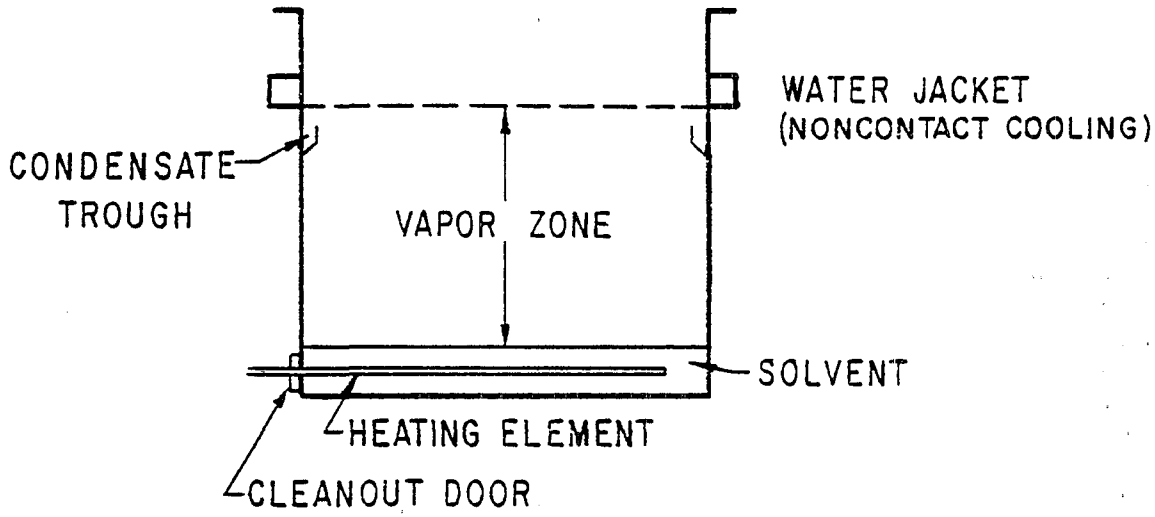

A. OPEN TOP VAPOR DEGREASER

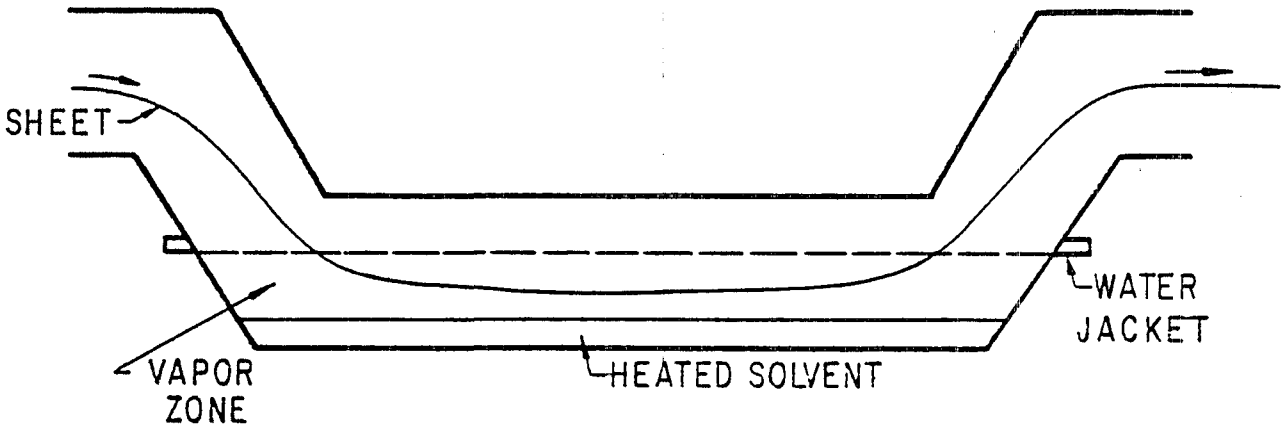

B. STRIP CONVEYORIZED DEGREASER

Figure III-13

VAPOR DEGREASING

SECTION IV

INDUSTRY SUBCATEGORIZATION

Subcategorization should take into account pertinent industry characteristics, manufacturing process variations, wastewater characteristics, and other factors. Effluent limitations and standards establish mass limitations on the discharge of pollutants which are applied, through the permit issuance process, to specific dischargers. To allow the national standard to be applied to a wide range of sizes of production units, the mass of pollutant discharge must be referenced to a unit of production. This factor is referred to as a production normalizing parameter and is developed in conjunction with subcategorization.

Division of the category into subcategories provides a mechanism for addressing process and product variations which result in distinct wastewater characteristics. The selection of production normalizing parameters provides the means for compensating for differences in production rates among plants with similar products and processes within a uniform set of mass-based effluent limitations and standards.

BASIS FOR SUBCATEGORIZATION

Factors Considered

After considering the nature of the various segments of the aluminum forming industry and their operations, EPA evaluated possible bases for subcategorization. These include:

1. Raw Materials Used
2. Manufacturing Processes
3. Wastewater Characteristics
4. Products Manufactured
5. Water Use
6. Water Pollution Control Technology
7. Treatment Costs
8. Solid Waste Generation
9. Size of Plant
10. Age of Plant
11. Number of Employees
12. Total Energy Requirements (Manufacturing Process and Water Treatment and Control)
13. Nonwater Quality Characteristics
14. Unique Plant Characteristics

Subcategorization Selection

After considering the above factors, it was concluded that the aluminum forming category consists of separate and distinct processes with enough variability in products and wastes to require the division of the industry into a number of discrete subcategories. The individual processes, wastewater characteristics, and applicable treatment technologies comprise the most significant factors in the subcategorization of this complex industry. The remaining factors either served to support and substantiate the subcategorization or were shown to be inappropriate bases for subcategorization. In evaluating these factors, the following items were addressed: the nature of the subcategorization based on the factor being considered; the positive and negative aspects of the potential subcategorization; the potential production normalizing parameters that could be used in conjunction with this subcategorization scheme; and the interrelationship between different factors. Each factor is discussed below.

Raw Materials. The raw materials used in the aluminum forming category can be classified as follows:

- aluminum and aluminum alloys;
- lubricants;
- surface treatment, degreasing, and furnace fluxing chemicals; and
- additives to lubricants and cooling water.

In some instances, the same raw material may take on various effluent characteristics, and these will require different treatment. For example, an oil that is emulsified requires different treatment than the same oil in a pure state. The proportion of particular pollutants may differ depending upon the type of aluminum alloy being processed. Copper alloyed aluminum may generate wastewater with higher concentrations of copper than other aluminum alloys. Due to process variations and the proprietary nature of many alloys and chemical additives, it is difficult to establish a production normalizing parameter that directly relates pollutant discharge to specific alloys or process chemicals.

Manufacturing Processes. There are four principal manufacturing processes used in aluminum forming: rolling, extrusion, forging, and drawing. Since recognition of these separate processes is common, subcategorization using these four processes would be easily understood.

Typically, a company will have only one of these forming operations at an individual plant site, as tabulated below. Consequently, all the plant operations associated with that facility would be regulated under one subcategory.

PLANTS HAVING ONLY ONE ALUMINUM FORMING OPERATION ON-SITE

Forming Operation	Number of Plants With Only This Forming Operation	Percent of Total Plants With This Forming Operation
Rolling	37	65
Extrusion	144	88
Forging	13	81
Drawing	52	68

Subcategorization based on the principal manufacturing processes does not take into account the wastewater generated by minor or ancillary production processes. In many cases, the principal manufacturing process will contribute only a small fraction of the plant's total process wastewater.

Wastewater Characteristics and Treatment Technologies. Using wastewater characteristics as a criterion, the following subcategorization would result: emulsions; pure oils, also known as neat oils; oil-in-water (nonemulsified) mixtures; and acidic or basic wastewaters. The major types of unit operations producing the identified waste streams are listed below.

Waste Stream	Unit Operations Producing the Waste Stream
Emulsions	Hot Rolling Cold Rolling Drawing Extrusion (Press Leakage)
Neat Oils	Cold Rolling Drawing
Oil-in-water (nonemulsified) mixtures	Casting Solution heat treatment Cleaning or etching
Acidic or basic wastewaters	Extrusion die cleaning Cleaning or etching Anodizing or conversion coating

This subcategorization scheme reflects the fact that effective wastewater pollutant removal is dependent on the wastewater characteristics and treatment system designed for removal of these pollutants. Treatment of emulsified and oil-in-water (non-emulsified) wastewaters in the same treatment system is inappropriate because additional treatment steps are required to break emulsions. Wastewaters generated during the cleaning or etching of aluminum with an acid or base solution may require pH adjustment with metals removal and may not need to be treated for oil removal. Finally, since spent neat oils are pure oil and contain no water, they may frequently be disposed of by incineration or contract hauling, thus requiring no treatment.

Products Manufactured. Another approach to subcategorization is based on the products manufactured, as listed below:

Product	Associated Manufacturing Process
Plate	Rolling
Sheet	Rolling
Strip	Rolling
Foil	Rolling
Rod and bar	Rolling, extrusion, drawing
Tubing	Extrusion or drawing
Miscellaneous shapes	Extrusion or forging
Wire and cable	Drawing
Other (L shapes, I-beams, etc.)	Drawing or extrusion

The product manufactured would be an appropriate criterion for subcategorization if the waste characterization and production

process to produce a given item are the same from plant to plant; however, this approach is not applicable to the manufacture of many aluminum formed products. For example, rods can be produced by two different production processes which generate similar wastewater (i.e., rolling and drawing); however, the mass of pollutants generated per unit of rod produced by rolling will be different than the amount generated by drawing the rod. Furthermore, some products produced by the same process may use different lubricants, therefore generating a waste with different characteristics. Strip and sheet, for example, can be produced by operations which use either neat or emulsified oils as lubricants.

This approach to subcategorization does not take into account ancillary operations, such as cleaning or etching, heat treatment, and casting, that may be found at any given plant. All of these factors make it very difficult to develop an equitable regulation using products manufactured as a basis for subcategorization.

Process Water Use. Major differences in water use (volume of water applied to a process per mass of product) between facilities with large and small production could be considered as a factor in the development of subcategories.

As will be discussed in Section V, analysis of the data indicated that production normalized water use (i.e., gallons per ton of aluminum formed) for a given unit operation is usually independent of production volume. For example, a large direct chill casting operation will use about the same amount of water per ton of ingot produced as an operation casting much less aluminum by the same method.

Size. The number of employees and amount of aluminum processed were used to measure relative sizes of aluminum forming plants.

Wastewaters produced by a production process are largely independent of the number of plant employees. Variations in staff occur for many reasons, including shift differences, clerical and administrative support, maintenance workers, efficiency of plant operations, and market fluctuations. Due to these and other factors, the number of employees is constantly fluctuating, making it difficult to develop a correlation between the number of employees and wastewater generation.

Subcategorization based on size in terms of production of aluminum would group plants by the off-pounds of extrusions, sheets, rods, etc. This is a good method of subcategorization for an economic analysis on this category since plants producing rod will compete for the same market, and smaller production plants

may have very different economic characteristics than large production plants. One drawback to this subcategorization approach is that it does not account for the ancillary operations frequently performed in conjunction with the forming operation and the wastewater they may generate.

Age. Aluminum forming is one of the newest large-volume metal industries. The demand for aluminum products has grown greatly since the end of World War II. Thus, aluminum forming plants are relatively modern; most are less than 30 years old. Furthermore, to remain competitive, plants must be constantly modernized. Modernization of production equipment, processes, treatment systems, and air pollution control equipment is undertaken on a continuous basis throughout the industry. Data regarding the age and date of the latest major modification for each plant were compiled from the dcp responses and summarized in Tables III-2 and III-3 (pp. 120 and 121), respectively.

Unique Plant Characteristics. Aluminum forming plants are unique on the basis of their physical locations and unit operations. As discussed later in this section, these unit operations are necessary to the manufacturing process, but vary from plant to plant, depending on the product and specifications.

Location. The geographical distribution of the aluminum forming plants is shown in Figure III-2 (p. 122). The plants are not limited to any one geographical location, but they are generally located east of the Mississippi River, with pockets of plants located in the western states of Washington, California, and Texas. Although some cost savings may be realized for facilities located in non-urban settings where land is available to install lagoons, equivalent control of wastewater pollutant discharge can be achieved by urban plants with the use of physical and chemical treatment systems that have smaller land requirements. Since most plants are located in the eastern part of the United States (an area where precipitation exceeds evaporation) or in urban areas, evaporation and land application of the wastewater are not commonly used. Presently, only 27 of the 271 plants are known to evaporate or apply wastewater to land.

Unit Operations. The following is a list of the unit operations performed as part of the aluminum forming process.

Unit Operation	Waste Stream
Direct chill casting	Contact cooling water
Continuous rod casting	Spent lubricant Contact cooling water
Continuous sheet casting	Spent lubricant
Stationary casting	Dry operation
Hot rolling	Spent emulsion
Cold rolling	Spent neat oil or emulsion
Roll grinding	Spent emulsion
Degassing	Scrubber liquor
Extrusion die cleaning	Bath caustic solution Rinse water Scrubber liquor
Extrusion dummy block cooling	Contact cooling water
Forging	Scrubber liquor
Drawing	Spent neat oil, emulsion, or soap solution
Annealing	Atmosphere scrubber liquor
Press heat treatment	Contact cooling water
Solution heat treatment	Contact cooling water
Homogenizing	Dry operation
Artificial aging	Dry operation
Degreasing	Spent solvents
Cleaning, etching, or other surface treatment	Bath: caustic, acid, seal, or detergent solutions Rinse water Scrubber liquor
Sawing	Spent neat oil or emulsion
Swaging	Dry operation

Included in this list are several operations that either do not discharge a waste stream or discharge small quantities of wastewater. Furthermore, for subcategories based on these operations, this approach to subcategorization does not take into account the different types of oils used for lubrication. For example, drawing can use a neat oil lubricant or an emulsified oil lubricant. Waste characteristics and treatment schemes are different for the two types of oils used.

Subcategory Selection

In selecting the subcategories, the Agency tried to minimize the number of subcategories, but at the same time provide sufficient segmentation to account for the differences between processes and associated wastewater streams. Because the aluminum forming category encompasses a variety of operations that generate wastewaters with differing characteristics, it is necessary to consider a combination of factors when establishing subcategorization.

Each of the factors listed and discussed previously are evaluated below on the basis of suitability for subcategorizing the aluminum forming category.

Raw Materials. The pollutants in the wastewater discharged are dependent on the raw materials; however, the amount of pollutants discharged does not directly correlate with the nature of raw materials used. Heavy discharge of some metals may result from the presence of these particular compounds in the aluminum alloy; however, the amount of metal that enters the wastewater is much more highly dependent on the operation performed on the alloy. For instance, etching the workpiece will result in a higher metal discharge than rolling the workpiece. Subcategorization solely on the basis of raw materials was considered inappropriate for this category because of the difficulty associated with correlating raw materials with the discharge of pollutants.

Manufacturing Processes. Aluminum forming is widely characterized by the principal manufacturing processes of rolling, extruding, forging, and drawing. Companies have built plants around a single production process and are familiar with the terminology. Pollutant generation can be related to the mass of production from these processes. On this basis, subcategorization based on manufacturing processes is appropriate for this category; however, the four processes of rolling, extruding, forging, and drawing do not account for the different lubricants, requiring different treatments, that can be used for the rolling and drawing operations. This approach to subcategorization also fails to consider the unique properties of the aluminum forming

plants in the variety of ancillary unit operations that may be present, many of which generate large volumes of wastewater. Therefore, the manufacturing processes by themselves are not suitable for subcategorizing the aluminum forming category.

Wastewater Characteristics. Wastewater characteristics are very important in the consideration of appropriate treatment technology and form the basis for effluent limitations. Subcategorization based solely on wastewater characteristics is inappropriate for the aluminum forming category since it is difficult to develop a production normalizing parameter. More than one manufacturing process may generate a waste stream with the same characteristics, such as rolling and drawing which both can use neat oils and emulsions. Volume of wastewater, or in this case lubricant generated per the mass of aluminum rolled, may vary greatly with the volume generated per mass of aluminum drawn. The purpose of subcategorizing is to allow for equitable regulations across a category and the subcategories must allow for a normalizing parameter to establish mass limitations. Wastewater characteristics alone are inappropriate for subcategorizing the aluminum forming category.

Products Manufactured. As discussed previously, the same product can be manufactured by as many as three of the aluminum forming operations. The mass of pollutant generated per unit of product will be different depending on the type of forming operation employed. Subcategorization based on products manufactured does not account for the ancillary operations, such as cleaning or etching, heat treatment, and casting, that may be found at any given plant. These factors make it very difficult to develop a reliable effluent limitation using products manufactured as a basis for the subcategorization. Thus, this is an inappropriate approach for subcategorizing the aluminum forming category to establish equitable effluent limitations; however, subcategorization on the basis of products manufactured is an appropriate approach for characterizing the industry for an economic impact analysis where the emphasis is on a plant's ability to compete in the marketplace.

Process Water Use. Process water use, when related to the mass of aluminum processed, is fairly constant regardless of the production volume. Since no distinct differences in water use could be identified between plants with large production volumes and plants with small production volumes, the Agency has determined that this approach is inappropriate to subcategorize the aluminum forming category. Flows which are normalized by some aspect of production are used to establish effluent limitations; variations in water use or discharge were considered and are discussed in detail in Sections V and IX.

Size. Size in terms of employment is considered to be an inappropriate basis for subcategorization because it cannot be directly related to the generation of wastewater. Size in terms of production is also considered to be inappropriate for subcategorizing to establish effluent guidelines, since it does not account for the wastewaters generated by the ancillary operations.

Age. Since most aluminum forming plants have been built in the past 30 years and have been modernized frequently, age is not a valid basis for subcategorization.

Location. Location does not appear to be a significant factor on which to base subcategorization. Most aluminum forming plants are located in urban areas; thus, there is no vast disparity in land availability between urban and rural plants. In addition, few plants use land application or evaporation to treat aluminum forming wastewaters.

Unit Operations. The principal benefit from using unit operations as a basis for subcategorization is that an appropriate effluent limitation can be established for each waste stream generated. For each regulated pollutant, a specific pollutant mass discharge value could be calculated for each waste stream present at the facility. These values would be summed to determine the total mass discharge allowed for that pollutant at that facility.

The difficulties with this approach are the large number of subcategories (approximately 25) and the need for a separate production normalizing parameter for each subcategory or unit operation.

Primarily because of the large number of subcategories and complications associated with it, subcategorization based on unit operations alone was not considered to be appropriate.

Summary of Subcategorization

The aluminum forming category is not well suited to subcategorization using any one of the factors discussed in this section. By applying a combination of factors, such as manufacturing processes, unit operations, raw materials, and wastewater characteristics, the aluminum forming category can be divided into six subcategories:

1. Rolling with Neat Oils
2. Rolling with Emulsions
3. Extrusion
4. Forging

5. Drawing with Neat Oils
6. Drawing with Emulsions or Soaps

Each manufacturing process consists of one of the four principal forming operations plus a number of ancillary operations. Each of these unit operations must be addressed by the limitations and standards. Since not all plants with a given manufacturing process have the same number of ancillary unit operations, some method of equating the plants must be developed. In addition to the principal forming operation, there are some ancillary operations that are unique to the principal forming operations and others that are necessary to manufacture the final product. For the purpose of subcategorization, the forming operation and these closely related ancillary operations are grouped to comprise a core operation. Another group of operations is not unique to the forming operations, is not always necessary in the manufacturing process, and does not discharge wastewater. For simplification, these are included with the other operations in the core. The core thus becomes a distinct regulatory unit that, for the purpose of establishing limits, is viewed as a single source of pollutants.

There are still a number of unit operations that do not fit into the core. These operations are not unique to a forming process, discharge wastewater (usually large volumes), and are not always necessary to the manufacturing process. Because these operations make significant contributions to the pollutant loadings when they are performed, but they are not performed consistently throughout the subcategory, they are not included in the core. Instead, these operations are included in the subcategories as ancillary operations that, for regulatory purposes, can be added to the core when they (the ancillary operations) are practiced, or in order to limit the pollutant discharges from aluminum forming plants.

Subcategorization on the basis of the core and ancillary operations as previously defined does not take into account the different types of wastes that can be generated by rolling and drawing. To account for the two types of wastes generated by rolling and drawing lubricants, four distinct operations were specified: rolling that uses neat oils, rolling that uses emulsions, drawing that uses neat oils, and drawing that uses emulsions or soaps. These four operations are still identifiable by the industry and account for the differences in wastewater generated by the same forming operation. Furthermore, each can be related to some unit of production to normalize plant practices and can be applied to the subcategorization scheme of core and ancillary operations. Thus, the manufacturing processes, unit operations, raw materials, and wastewater characteristics

all play an important part in subcategorizing the aluminum forming category.

PRODUCTION NORMALIZING PARAMETER

In order to ensure equitable regulation of the category, effluent limitations guidelines and standards of performance have been established on a pollutant mass discharge basis (i.e., mass of pollutant discharged per unit of production). The unit of production specified in these regulations is known as a production normalizing parameter (PNP). Establishing concentration limitations rather than mass-based limits was considered; however, a plant that diluted its wastewater would have an advantage in meeting concentration-based limitations over a plant that conserved water. Thus, with concentration limitations a plant might actually be penalized for having good water conservation practices. To avoid this possibility, the mass of pollutants in the discharge has been related to a specific PNP to establish a limitation that will limit the pollutant mass discharged proportionate to an amount of production.

The approach used in selecting the appropriate PNP for a given subcategory or ancillary operation is two-fold: achieving a correlation between production and the corresponding discharge of pollutants and ensuring feasibility and ease of regulation. Some of the alternatives considered in specifying the PNP include:

1. Mass of aluminum processed,
2. Number of finished products manufactured,
3. Surface area of aluminum processed, and
4. Mass of process chemicals used.

The evaluation of these alternatives is summarized in the discussion that follows.

Mass of Aluminum Processed. The aluminum forming industry typically maintains production records of the pounds of aluminum processed by an individual unit operation. Availability of these production data and lack of data for other production parameters, such as area of aluminum and number of products, makes this the most convenient parameter to use. The aluminum forming dcp requested three production values: the capacity production rate for the unit operation in question, the maximum production rate achieved in 1977, and the average production rate for 1977, all in lb/hr.

Number of End Products Processed. The number of products processed by a given plant would not account for the variations in size and shape typical of formed products. Extrusions, for instance, are produced in a wide range of sizes. It would be

unreasonable to expect the quenching of a large extrusion to use the same amount of water required for a smaller extruded product.

Surface Area of Aluminum Processed. Surface area may be an appropriate production normalizing parameter for surface treatment operations of aluminum such as cleaning or etching. It would not, however, be appropriate for quench or lubricant and cooling operations. The surface area of aluminum processed is not generally kept or known by industry and in some cases, such as forging of miscellaneous shapes, surface area data would be difficult to determine.

Mass of Process Chemicals Used. The mass of process chemicals used (e.g., lubricants, solvents, and cleaning or etching solutions) is dependent on the processes which the aluminum undergoes rather than the other raw materials used in the process.

Selection of the Production Normalizing Parameter

Two of the four parameters considered, number of finished products and mass of process chemicals, are not appropriate PNP's for the aluminum forming category. The number of finished products is inappropriate because of the lack of consistency and uniformity in the finished products manufactured by an aluminum forming plant, particularly by an extrusion or forging plant. Also the processes vary from plant to plant even when producing essentially the same product. The mass of process chemicals is an inappropriate PNP because the mass of pollutants discharged is more directly related to the type of operation using the process chemicals than the amount of these compounds used, although the process chemicals frequently enter the wastewater.

The surface area of product as a PNP would relate the mass of pollutants discharged to the surface area of aluminum that contacts the process wastewater. This parameter may be appropriate for some aluminum forming operations that produce wastewater, since the mass of pollutants entering the wastewater may be related to the area of the aluminum it is contacted with. However, the Agency is not selecting surface area as a production normalizing parameter because surface area is not always the most appropriate parameter, especially in contact cooling situations where the volume of water used is more closely related to the mass of product. Aluminum formed products, especially forged products or extrusions, also come in a wide variety of shapes and the surface area of these shapes would be difficult to determine.

The fourth parameter considered is the mass of product. The Agency has selected mass as the most appropriate PNP. The mass of pollutants can be related to the mass of aluminum processed

and most companies keep production records in terms of mass. The PNP is based on the average production rates reported in the dcp's. In most cases, the plants were operating at or near the capacity production rate for a given piece of equipment. The average production rate will correlate with the mass of pollutants found in the wastewater. For the six subcategories, the core operations are closely related to the principal forming operation and the mass of pollutants generated from each ought to be dependent on the mass of aluminum processed through the forming operation. Thus, there is only one PNP for each core based on the mass of pollutants processed through the forming operation. Each ancillary operation has a separate PNP based on the mass of aluminum processed through the ancillary operation. An example of how the PNP's apply when establishing mass discharge limits is shown in Section IX.

The PNP for aluminum forming is "off-kilograms" or the kilograms of product removed from a machine at the end of a process cycle. In the rolling process aluminum ingot enters the mill to be processed. Following one process cycle which may substantially reduce the ingot's thickness, the aluminum is removed from the rolling mill where it may be processed through another operation, such as annealing, sizing, cleaning, or it may simply be stored before being brought back to the rolling mill for another process cycle, further reducing the thickness. The mass of aluminum removed from the rolling mill after each process cycle multiplied by the number of process cycles is the PNP for that process. The core of each subcategory has one PNP which is based on the mass of aluminum processed through the principal forming operation. There is a different PNP for each ancillary operation which is the mass of aluminum removed from the process following each process cycle for that specific operation. For example, the PNP for solution heat treatment would be the mass of aluminum removed from the contact cooling water quench that follows solution heat treatment. In the case of press heat treatment the PNP is the mass of aluminum removed from the contact cooling water quench that immediately follows extrusion.

DESCRIPTION OF SUBCATEGORIES

Subcategory Terminology and Usage

Each subcategory is broken into "core" and "ancillary" operations. The core is composed of those operations that always occur in conjunction with the forming operation, are dry operations, or are a basic part of the manufacturing process. The core limitation is based on the mass of aluminum passed through the principal manufacturing unit. The core limitation does not vary within a given subcategory and applies to all the plants in that subcategory.

Operations not included in the core are classified as ancillary operations. These are operations involving discharged wastewater streams of significant pollutant concentrations and flows that may or may not be present at any one facility. The ancillary operation limitations are based on the mass of aluminum processed through the given ancillary operations. In other words, the mass of aluminum cast by the direct chill method is the normalizing parameter for casting, and the mass of aluminum cleaned or etched is the normalizing parameter for cleaning or etching. To determine the effluent limitation for the facility as a whole, the permit writer must consider the core limitation as well as the appropriate ancillary limitation.

The ancillary operation of cleaning or etching includes all surface treatment operations, including chemical or electrochemical anodizing and conversion coating when they are performed at the same location where the aluminum is formed. A cleaning or etching operation is defined by the cleaning or etching baths which are followed by a rinse. Multiple baths would be considered multiple cleaning or etching operations only when each bath is followed by a rinse and a separate limitation would apply to each bath-rinse combination. Multiple rinses following a single bath will be regulated by a single limitation.

In the following discussion, the aluminum forming subcategories are presented on an individual basis. The core and ancillary operations included in each subcategory are briefly described, and the appropriate production normalizing parameters are identified.

Some plants will be included under more than one subcategory. The frequency of plants with more than one subcategory is tabulated below. In these cases, the subcategories should be used as building blocks to establish permit limitations. It should be noted that in most cases the ancillary operations will be included with only one subcategory (i.e., the core operation with which it is most closely associated). As an example, consider a rolling plant which has both rolling with neat oils and rolling with emulsions. This plant has direct chill casting as one of the ancillary operations. Since the casting precedes rolling with emulsions and the rolling with emulsions operation is performed on the product of the casting operation, casting will be considered an ancillary operation only to the Rolling with Emulsions Subcategory.

The lists presented in the following discussions provide information specific to the subcategory being addressed. The frequency of occurrence of ancillary streams considers each ancillary operation individually and apart from any other ancillary operations that may be present at the same plant. Thus, the sum of the

frequencies of the ancillary operations cannot be related to the number of plants in that subcategory. The same methods have been applied to the frequency of subcategory overlap. Since there are some plants that will be in more than one subcategory, the sum of plants in each subcategory will be larger than the number of plants in the category.

INCIDENCE OF OVERLAP WITH MORE THAN ONE OTHER SUBCATEGORY

Subcategory	Total Plants in One or More Subcategory	Percent of Total Plants in the Subcategory
Rolling with Neat Oils	34	68
Rolling with Emulsions	28	86
Extrusion	22	13
Forging	9	57
Drawing with Neat Oils	25	38
Drawing with Emulsions or Soaps	5	38

Rolling with Neat Oils Subcategory

This subcategory is applicable to all wastewater discharges resulting from or associated with aluminum rolling operations in which neat oils are used as a lubricant. The unit operations and associated waste streams covered by this subcategory and the appropriate production normalizing parameters are listed below.

ROLLING WITH NEAT OILS SUBCATEGORY

Stamping — 1. None # dry oper. / no allowance

Unit Operation	Waste Stream	Production Normalizing Parameter
CORE:		
Rolling with neat oils	Spent lubricant	Mass of aluminum rolled with neat oil
Roll grinding	Spent emulsion	Mass of aluminum rolled with neat oil
Stationary casting	None	Mass of aluminum rolled with neat oil
Homogenizing	None	Mass of aluminum rolled with neat oil
Annealing	Atmosphere scrubber liquor	Mass of aluminum rolled with neat oil
Artificial aging	None	Mass of aluminum rolled with neat oil
Degreasing	Spent solvent	Mass of aluminum rolled with neat oil
Sawing	Spent lubricant	Mass of aluminum rolled with neat oil
Miscellaneous non-descript wastewater sources	Various	Mass of aluminum rolled with neat oil
ANCILLARY:		
Continuous sheet casting	Spent lubricant	Mass of aluminum sheet cast by continuous methods
Rolling solution heat treatment	Contact cooling water	Mass of aluminum quenched
Cleaning or etching	Bath	Mass of aluminum cleaned or etched
	Rinse	Mass of aluminum cleaned or etched
	Scrubber liquor	Mass of aluminum cleaned or etched

The following list summarizes data pertaining to the number of plants in this subcategory and the waste streams which are present at those plants:

Associated Waste Streams	Frequency: No. of Plants	Frequency: Percent of Total Plants in the Subcategory
CORE:		
Rolling with neat oils spent lubricant	50	100
Roll grinding spent emulsion	*	*
Annealing atmosphere scrubber liquor	1	2
Sawing spent lubricant	*	*
Miscellanous nondescript wastewater	*	*
ANCILLARY:		
Continuous sheet casting		
Spent lubricant	11	22
Rolling solution heat treatment		
Contact cooling water	6	12
Cleaning or etching		
Bath	9	18
Rinse	9	18
Scrubber liquor	0	0

*An accurate count could not be determined from available data, assumed to be present at all plants.

As this table shows, 50 of the plants surveyed in this study are included in the Rolling with Neat Oils Subcategory. For the majority of these plants, the core regulations can be applied without alteration because no ancillary streams are present. However, continuous sheet casting is practiced at 11 plants (22 percent), and cleaning or etching of the rolled product is practiced at nine plants (18 percent). The presence of heat treatment was reported at only six plants (12 percent).

Over half of the plants (33 of 50) associated with this subcategory were also associated with one or more additional subcategories. The most common case, overlap with the Rolling with Emulsions Subcategory, was reported at 19 of the 50 plants (38 percent). Frequently, rolling of aluminum with emulsions is followed by rolling to desired gauge using neat oils. It is important to realize that at these plants, operations such as casting were considered to be associated with the emulsion rolling rather than neat oil rolling for the purpose of subcategorization. In this way, duplication of streams is avoided. Seven of the plants (14 percent) were included in both the Rolling with Neat Oils and Drawing with Neat Oils subcategories. In these

cases, the aluminum was usually first rolled and then drawn to form the desired product. If the drawn product was then etched or heat treated, these operations were associated with drawing with neat oils rather than rolling with neat oils. In only four cases (8 percent) was overlap with more than one other subcategory found to exist.

As discussed in Section III (p. 110), the annealing operation does not use process water. One of the plants surveyed anneals aluminum which is rolled with neat oils and derives the inert gas atmosphere used in its annealing process from furnace off-gases. Because of the sulfur content of furnace fuels, the off-gases require cleaning with wet scrubbers to remove contaminants. Other plants import cleaned gases or burn natural gas to provide an inert atmosphere. Since the Agency believes that this scrubber is necessary to the operation of the annealing furnace in this process situation, an allowance has been included as part of the core of the Rolling with Neat Oils Subcategory. For the Rolling with Neat Oils Subcategory, two core allowances will be established, because most plants do not have an annealing scrubber liquor flow. Separate allowances will be established for core waste streams without an annealing furnace scrubber and for core waste streams with an annealing furnace scrubber for only the rolling with neat oils subcategory since no annealing furnace scrubbers are known to be in operation in conjunction with any other forming operation.

Rolling with Emulsions Subcategory

This subcategory is applicable to all wastewater discharges resulting from or associated with aluminum rolling operations in which oil-in-water emulsions are used as lubricants. The unit operations and associated waste streams covered by this subcategory and the appropriate production normalizing parameters are listed below.

ROLLING WITH EMULSIONS SUBCATEGORY

Unit Operation	Waste Stream	Production Normalizing Parameter
CORE:		
Rolling with emulsions	Spent emulsion	Mass of aluminum rolled with emulsions
Roll grinding	Spent emulsion	Mass of aluminum rolled with emulsions
Stationary casting	None	Mass of aluminum rolled with emulsions
Homogenizing	None	Mass of aluminum rolled with emulsions
Artificial aging	None	Mass of aluminum rolled with emulsions
Degreasing	None	Mass of aluminum rolled with emulsions
Annealing	None	Mass of aluminum rolled with emulsions
Sawing	Spent lubricant	Mass of aluminum rolled with emulsions
Miscellaneous non-descript wastewater sources	Various	Mass of aluminum rolled with emulsions
ANCILLARY:		
Direct chill casting	Contact cooling water	Mass of aluminum cast by direct chill method
Rolling solution heat treatment	Contact cooling water	Mass of aluminum quenched
Cleaning or etching	Bath	Mass of aluminum cleaned or etched
	Rinse	Mass of aluminum cleaned or etched
	Scrubber liquor	Mass of aluminum cleaned or etched

The following list summarizes data pertaining to the number of plants in this subcategory and the waste streams which are present at those plants.

Associated Waste Streams	Frequency: No. of Plants	Frequency: Percent of Total Plants in the Subcategory
CORE:		
Rolling with emulsions spent emulsion	29	100
Roll grinding spent emulsion	*	*
Sawing spent lubricant	*	*
Miscellaneous nondescript wastewater	*	*
ANCILLARY:		
Direct chill casting		
Contact cooling water	20	69
Rolling solution heat treatment		
Contact cooling water	8	28
Cleaning or Etching		
Bath	7	24
Rinse	7	24
Scrubber liquor	2	7

*An accurate count could not be determined from available data, assumed to be present at all plants.

Of the plants surveyed in this study, 29 were classified as belonging to the Rolling with Emulsions Subcategory. The core streams in this subcategory include rolling emulsions that are expected to be present at every plant. As shown in the preceding list, the regulation of plants in this subcategory will usually require consideration of waste streams associated with ancillary operations. Direct chill casting is associated with the rolling operations at 20 of the plants surveyed. Solution heat treatment is practiced at eight plants. Seven plants will also require regulation of cleaning or etching baths and rinses as an ancillary stream, and two plants will receive an allocation for a cleaning or etching scrubber liquor discharge.

In all but one case (97 percent), plants in the Rolling with Emulsions Subcategory were also included in one or more other subcategories. The most common case, overlap with the Rolling with Neat Oils Subcategory, was reported at 19 of the 29 plants (66 percent). Frequently, rolling of aluminum with emulsions is followed by rolling with neat oils to the desired gauge. It is important to realize that at these plants, operations such as direct chill casting were considered to be associated with the emulsion rolling rather than neat oil rolling for the purpose of subcategorization. In this way, duplication of streams is

avoided. Two of the plants (7 percent) were included in both the Rolling with Emulsions and Drawing with Neat Oils subcategories. Two of the plants (7 percent) were included in both the Rolling with Emulsions and Extrusion subcategories. In five cases (17 percent), overlap with more than one other subcategory was found to exist.

Extrusion Subcategory

This subcategory is applicable to all wastewater discharges resulting from or associated with aluminum extrusion operations. The unit operations and associated waste streams covered by this subcategory and the appropriate production normalizing parameters are listed below.

EXTRUSION SUBCATEGORY

Unit Operation	Waste Stream	Production Normalizing Parameter
CORE:		
Extrusion	Dummy block cooling	Mass of aluminum extruded
Die cleaning	Bath and rinse	Mass of aluminum extruded
	Scrubber liquor	Mass of aluminum extruded
Stationary casting	None	Mass of aluminum extruded
Annealing	None	Mass of aluminum extruded
Homogenizing	None	Mass of aluminum extruded
Artificial aging	None	Mass of aluminum extruded
Degreasing	Spent solvent	Mass of aluminum extruded
Sawing	Spent lubricant	Mass of aluminum extruded
Miscellaneous non-descript wastewater sources	Various	Mass of aluminum extruded
ANCILLARY:		
Direct chill casting	Contact cooling water	Mass of aluminum cast by direct chill method
Extrusion press or	Contact cooling	Mass of aluminum

solution heat treatment	water	quenched
Cleaning or etching	Bath	Mass of aluminum cleaned or etched
	Rinse	Mass of aluminum cleaned or etched
	Scrubber liquor	Mass of aluminum cleaned or etched
Degassing	Scrubber liquor	Mass of aluminum degassed
Extrusion press	Hydraulic fluid leakage	Mass of aluminum extruded

The following list summarizes data pertaining to the number of plants in this subcategory and the waste streams which are present at those plants:

Associated Waste Streams	Frequency: No. of Plants	Frequency: Percent of Total Plants in the Subcategory
CORE:		
Extrusion	163	100
Die cleaning bath and rinse	*	*
Die cleaning scrubber liquor	*	*
Sawing spent lubricant	*	*
Miscellaneous nondescript wastewater	*	*
ANCILLARY:		
Direct chill casting		
Contact cooling water	44	27
Extrusion press and solution heat treatment		
Contact cooling water	52	32
Cleaning or etching		
Bath	85	52
Rinse	85	52
Scrubber liquor	3	2
Degassing		
Scrubber liquor	1	1
Extrusion press leakage	5	3

*An accurate count could not be determined from available data, assumed to be present at all plants.

The Extrusion Subcategory includes more plants, 163, than any other subcategory, or approximately half of the plants surveyed. Three of these plants are known to have closed since proposal. Although an accurate count was not possible from the available data, extrusion die cleaning is expected to be present at every extrusion plant, and this operation serves as the principal component of the core for this subcategory.

More than half of the plants in this subcategory can be regulated on the basis of the core allocation alone, but the other facilities will require the consideration of ancillary streams. As shown in the preceding list, the most common ancillary operation is cleaning or etching (associated with extrusion at 85 of these plants), followed by heat treatment (32 percent) and direct chill casting (27 percent).

Although most of the plants in the Extrusion Subcategory (88 percent) are not associated with any other subcategories, some overlap does occur. In the most common example, nine of the extrusion plants (6 percent) are also associated with the Drawing with Neat Oils Subcategory.

Forging Subcategory

This subcategory is applicable to all wastewater discharges resulting from or associated with aluminum forging operations. The unit operations and associated waste streams covered by this subcategory and the appropriate production normalizing parameters are listed below.

FORGING SUBCATEGORY

Unit Operation	Waste Stream	Production Normalizing Parameter
CORE:		
Forging	None	Mass of aluminum forged
Artificial aging	None	Mass of aluminum forged
Annealing	None	Mass of aluminum forged
Degreasing	Spent solvent	Mass of aluminum forged
Sawing	Spent lubricant	Mass of aluminum forged
Miscellaneous non-descript wastewater sources	Various	Mass of aluminum forged

ANCILLARY:

Forging air pollution control	Scrubber liquor	Mass of aluminum forged
Forging solution heat treatment	Contact cooling water	Mass of aluminum quenched
Cleaning or etching	Bath	Mass of aluminum cleaned or etched
	Rinse	Mass of aluminum cleaned or etched
	Scrubber liquor	Mass of aluminum cleaned or etched

The following list summarizes data pertaining to the number of plants in this subcategory and the waste streams which are present at these plants:

Associated Waste Streams	Frequency: No. of Plants	Frequency: Percent of Total Plants in the Subcategory
CORE:		
Sawing spent lubricant	16	100
Miscellaneous nondescript wastewater	*	*
ANCILLARY:		
Forging air pollution control		
Scrubber liquor	4	25
Forging solution heat treatment		
Contact cooling water	11	69
Cleaning or etching		
Bath	13	81
Rinse	13	81
Scrubber liquor	2	13

*An accurate count could not be determined from available data, assumed to be present at all plants.

Of the 16 plants identified with the Forging Subcategory, only one could be regulated by the core streams alone. The most common ancillary streams, cleaning or etching baths and rinses, are each associated with 81 percent of the forging plants. Frequently, more than one ancillary stream is associated with a

given plant. Six of the 16 forging plants (38 percent) involve at least three such streams.

Most of the plants in the Forging Subcategory (81 percent) do not have operations associated with any other subcategory. Overlap only occurs with the Extrusion and Drawing subcategories.

Drawing with Neat Oils Subcategory

This subcategory is applicable to all wastewater discharges resulting from or associated with aluminum drawing operations in which neat oils are used as a lubricant. The unit operations and associated waste streams covered by this subcategory and the appropriate production normalizing parameters are listed below.

DRAWING WITH NEAT OILS SUBCATEGORY

Unit Operation	Waste Stream	Production Normalizing Parameter
CORE:		
Drawing with neat oils	Spent lubricant	Mass of aluminum drawn with neat oils
Stationary casting	None	Mass of aluminum drawn with neat oils
Homogenizing	None	Mass of aluminum drawn with neat oils
Annealing	None	Mass of aluminum drawn with neat oils
Artificial aging	None	Mass of aluminum drawn with neat oils
Degreasing	Spent solvent	Mass of aluminum drawn with neat oils
Sawing	Spent lubricant	Mass of aluminum drawn with neat oils
Swaging	None	Mass of aluminum drawn with neat oils
Miscellaneous non-descript wastewater sources	Various	Mass of aluminum drawn with neat oils
ANCILLARY:		
Continuous rod casting	Contact cooling water	Mass of aluminum rod cast by continuous methods
	Spent lubricant	Mass of aluminum rod cast by continuous methods

Drawing solution heat treatment	Contact cooling water	Mass of aluminum quenched
Cleaning or etching	Bath	Mass of aluminum cleaned or etched
	Rinse	Mass of aluminum cleaned or etched
	Scrubber liquor	Mass of aluminum cleaned or etched

The following list summarizes data pertaining to the number of plants in this subcategory and the waste streams which are present at those plants:

Associated Waste Streams	Frequency: No. of Plants	Frequency: Percent of Total Plants in the Subcategory
CORE:		
Drawing with neat oils spent lubricant	66	100
Sawing spent lubricant	*	*
Miscellaneous nondescript wastewater	*	*
ANCILLARY:		
Continous rod casting		
Contact cooling water	2	3
Spent lubricant	2	3
Drawing solution heat treatment		
Contact cooling water	8	12
Cleaning or etching		
Bath	13	20
Rinse	13	20
Scrubber liquor	0	0

*An accurate count could not be determined from available data, assumed to be present at all plants.

The Drawing with Neat Oils Subcategory is the second largest aluminum forming subcategory and contains 66 of the 277 plants surveyed in this study. The majority of the plants in the Drawing with Neat Oils Subcategory can be regulated on the basis of the core alone. Heat treatment contact cooling water and cleaning or etching baths and rinses are the most common ancillary streams in this subcategory.

Frequent overlap with other subcategories was noted. The most common case was with the Extrusion Subcategory; nine of the neat oil drawing plants (14 percent) were found to have extrusion processes as well. In all, 36 percent of the plants in the Drawing with Neat Oils Subcategory were also associated with one or more other alumminum forming subcategories.

Drawing with Emulsions or Soaps Subcategory

This subcategory is applicable to all wastewater discharges resulting from or associated with the aluminum drawing operations which use oil-in-water emulsion or soap solution lubricants. The unit operations and associated waste streams covered by this subcategory and the appropriate production normalizing parameters are listed below.

DRAWING WITH EMULSIONS OR SOAPS SUBCATEGORY

Unit Operation	Waste Stream	Production Normalizing Parameter
CORE:		
Drawing with emulsions or soaps	Spent emulsion	Mass of aluminum drawn with emulsions or soaps
Stationary casting	None	Mass of aluminum drawn with emulsions or soaps
Artificial aging	None	Mass of aluminum drawn with emulsions or soaps
Homogenizing	None	Mass of aluminum drawn with emulsions or soaps
Annealing	None	Mass of aluminum drawn with emulsions or soaps
Degreasing	Spent solvent	Mass of aluminum drawn with emulsions or soaps
Sawing	Spent lubricant	Mass of aluminum drawn with emulsions or soaps
Swaging	None	Mass of aluminum drawn with emulsions or soaps
Miscellaneous non-descript wastewater sources	Various	Mass of aluminum drawn with emulsions or soaps

ANCILLARY:

Continuous rod casting	Contact cooling water	Mass of aluminum rod cast by continuous methods
	Spent lubricant	Mass of aluminum rod cast by continuous methods
Drawing solution heat treatment	Contact cooling water	Mass of aluminum quenched
Cleaning or etching	Bath	Mass of aluminum cleaned or etched
	Rinse	Mass of aluminum cleaned or etched
	Scrubber liquor	Mass of aluminum cleaned or etched

The following list summarizes data pertaining to the number of plants in this subcategory and the waste streams which are present at these plants:

Associated Waste Streams	Frequency: No. of Plants	Frequency: Percent of Total Plants in the Subcategory
CORE:		
Drawing with emulsions or soaps spent lubricants	13	100
Sawing spent lubricants	*	*
Miscellaneous nondescript wastewater	*	*
ANCILLARY:		
Continuous rod casting		
Contact cooling water	1	8
Spent lubricant	1	8
Drawing solution heat treatment		
Contact cooling water	4	31
Cleaning or etching		
Bath	1	8
Rinse	1	8
Scrubber liquor	0	0

*An accurate count could not be determined from available data, assumed to be present at all plants.

The Drawing with Emulsions or Soaps Subcategory is the smallest of the aluminum forming subcategories, with only 13 plants. The principal core stream in this subcategory, spent emulsions from drawing with emulsions or soaps, is present at all 13 plants. For the majority of plants, the core streams accurately describe all wastewater associated with the subcategory. At four of the plants (31 percent), solution heat treatment is applied to the drawn product. Continuous rod casting and cleaning or etching were each reported less frequently. Consideration of the appropriate ancillary streams is required for these plants.

Most of the plants (69 percent) are not associated with any other subcategories. Overlap with other subcategories was observed at four of the 13 plants surveyed (31 percent).

SECTION V

WATER USE AND WASTEWATER CHARACTERISTICS

This section presents the analytical data that characterize the raw wastewater and indicate the effectiveness of various wastewater treatment processes and the flow data that serve as the basis for developing regulatory flow allowances in the aluminum forming category. The data were obtained from four sources: data collection portfolios (dcp's); sampling and analysis programs; 308 letters sent to industry to obtain additional information on comments submitted during the comment period; and longterm or historical data.

SOURCES OF DATA

Data Collection Portfolios

Data collection portfolios (dcp's) are questionnaires which were developed by the Agency to obtain extensive data from plants in the aluminum forming category. These dcp's, which were sent to all known aluminum forming facilities, requested information about plant age, production, number of employees, water usage, manufacturing processes, raw material and process chemical usage, wastewater treatment technologies, the known or believed presence or absence of toxic pollutants in the plant's raw and treated process wastewaters, and other pertinent factors.

The dcp responses supplied the quantity of aluminum produced during 1977, as well as the average production rate (lb/hr), maximum production rate, and the rate at full capacity for each operation. As discussed in Section IV, the average production rate is considered the most applicable parameter for relating to water use and raw waste characteristics, and has been used as the normalizing basis for calculations.

Data supplied by dcp responses were evaluated, and two flow-to-production ratios were calculated for each stream. The two ratios, water use and wastewater discharge flow, are differentiated by the flow value used in calculation. Water use is defined as the volume of water or other fluid (e.g., emulsions, lubricants) required for a given process per mass of aluminum product and is therefore based on the sum of recycle and make-up flows to a given process. Wastewater flow discharged after in-process treatment or recycle (if these are present) is used in calculating the production normalized flow for that waste stream. The production normalized wastewater flow is defined as the volume of wastewater discharged from a given process to further treatment, disposal, or discharge per mass of aluminum produced. Differ-

ences between the water use and wastewater flows associated with a given stream result from recycle, evaporation, and carryover on the product. The production values used in calculation correspond to the production normalizing parameter, PNP, assigned to each stream, as outlined in Section IV.

The production normalized flows were compiled and statistically analyzed by stream type. Where appropriate, an attempt was made to identify factors that could account for variations in water use. The production normalized flow information is summarized in this section. A similar analysis of factors affecting the wastewater values is presented in Sections IX, X, XI, and XII where representative BPT, BAT, NSPS, and pretreatment discharge flow allowances are selected for use in calculating the effluent limitations and standards.

The BPT discharge flows were also used to estimate flows at aluminum forming plants that supplied EPA with only production data. The estimated flow was then used to determine the cost of wastewater treatment at these facilities (see Section VIII).

The methods used in evaluation of wastewater data varied as dictated by the intended use of the results. For example, in Section VI the wastewater data from effluent samples are examined to select pollutants for consideration in regulating the category.

The mass loading data (kg of pollutant per kkg of production) from sampled plants were averaged to determine mass loadings typical of the different wastewater streams.

Sampling and Analysis Program

The sampling and analysis program discussed in this section was undertaken primarily to implement portions of the Settlement Agreement and to identify pollutants of concern in the industry, with emphasis on toxic pollutants. Samples were collected at 25 aluminum forming facilities and subsequently analyzed.

This section summarizes the purpose of the sampling trips and identifies the sites sampled and parameters analyzed. It also presents an overview of sample collection, preservation, and transportation techniques. Finally, it describes the pollutant parameters quantified, the methods of analyses and laboratories used, the detectable concentration of each pollutant, and the general approach used to ensure the reliability of the analytical data produced.

Prior to each sampling visit, all available data, such as layout and diagrams of the selected plant's production processes and

wastewater treatment facilities, were reviewed. Often an engineering visit to the plant to be sampled was made prior to the actual sampling visit to finalize the sampling approach. Among the types of information obtained on engineering visits were identification and observations of production processes, types of wastewater generated, use of wastewater treatment technologies, and in-process technologies. These observations were recorded in plant visit reports. Representative sample points were then selected to provide coverage of discrete raw wastewater sources, total raw wastewater entering a wastewater treatment system, and final effluents. Finally, before conducting a visit, a detailed sampling plan showing the selected sample points and all pertinent sample data to be obtained was generated and reviewed.

Site Selection. Twenty plants were sampled prior to proposal. The reason that the Agency selected these 20 plants was to adequately represent the full range of manufacturing operations found in this industry as well as the performance of existing wastewater treatment systems. As such, the plants selected for sampling were typically plants with multiple forming operations and associated surface and heat treatment operations. The flow rates and pollutant concentrations in the wastewaters discharged from the manufacturing operations at these plants are believed to be representative of the flow rates and pollutant concentrations which would be found in wastewaters generated by similar operations at any plant in the aluminum forming category. In addition, the 20 sampled plants have a variety of treatment systems in place. Plants with no treatment as well as plants using the technologies considered as the basis for regulation were included.

Five plants were sampled after proposal to obtain data necessary for the Agency to adequately address several issues that arose during the comment period. These five plants were identified as having operations directly related to specific comment issues and were therefore selected for sampling efforts. Metals and conventional pollutants data have been incorporated into the data base presented in this section. Organics data for extrusion press hydraulic fluid are also presented in this section. The remaining organic pollutant analyses were received from the laboratory too late to be included in the data base. Samples were also collected from before and after modules of wastewater treatment systems. These additional performance data were collected to compare to the treatment effectiveness concentrations derived using the combined metals data base (see Section VII - Lime and Settle Performance - Combined Metals Data Base, p.).

Field Sampling. After selection of the plants to be sampled, each plant was contacted by telephone, and a letter of notification was sent to each plant as to when a visit would be expected.

These inquiries led to acquisition of facility information necessary for efficient on-site sampling. The information resulted in selection of the sources of wastewater to be sampled at each plant. The sample points included, but were not limited to, untreated and treated discharges, process wastewater, and partially treated wastewater.

Sites visited for this sampling program are listed below by subcategory and letter designation:

1. Rolling with Neat Oils - Plants B, C, D, E, N, P, U, T, CC, and EE.

2. Rolling with Emulsions - Plants B, C, D, E, H, P, T, U, CC, and EE.

3. Extrusion - Plants F, G, K, L, N, R, V, W, AA, BB, and DD.

4. Forging - Plants A, J, Q, R, and W.

5. Drawing with Neat Oils - Plants E, H, R, and V.

6. Drawing with Emulsions or Soaps - Plants S and W.

Sample Collection, Preservation, and Transportation. Collection, preservation, and transportation of samples were accomplished in accordance with procedures outlined in Appendix III of "Sampling and Analysis Procedures for Screening of Industrial Effluents for Priority Pollutants" (published by the Environmental Monitoring and Support Laboratory, Cincinnati, Ohio, March 1977, revised, April 1977) and in "Sampling Screening Procedure for the Measurement of Priority Pollutants" (published by the EPA Effluent Guidelines Division, Washington, D.C., October 1976). The procedures are summarized in the paragraphs that follow.

Whenever practical, all samples collected at each sampling point were taken from mid-channel at mid-depth in a turbulent, well-mixed portion of the waste stream. Periodically, the temperature and pH of each waste stream sampled were measured on-site.

Each large composite (Type 1) sample was collected in a new 11.4-liter (3-gallon), narrow-mouth glass jug that had been washed with detergent and water, rinsed with tap water, rinsed with distilled water, rinsed with methylene chloride, and air dried at room temperature in a dust-free environment.

Before collection of Type 1 samples, new Tygon tubing was cut to minimum lengths and installed on the inlet and outlet (suction and discharge) fittings of the automatic sampler. Two liters

(2.1 quarts) of blank water, known to be free of organic compounds and brought to the sampling site from the analytical laboratory, were pumped through the sampler and its attached tubing into the glass jug; the water was then distributed to cover the interior of the jug and subsequently discarded.

A blank was produced by pumping an additional 3 liters (3.2 quarts) of blank water through the sampler, distributed inside the glass jug, and poured into a 3.8-liter (1-gallon) sample bottle that had been cleaned in the same manner as the glass jug. The blank sample was sealed with a Teflon -lined cap, labeled, and packed in ice in a plastic foam-insulated chest. This sample subsequently was analyzed to determine any contamination contributed by the automatic sampler.

During collection of each Type 1 sample, the glass jug was packed in ice in a separate plastic foam-insulated container. After the complete composite sample had been collected, it was mixed to provide a homogeneous mixture, and two 0.95-liter (1-quart) aliquots were removed for metals analysis and placed in new labeled plastic 0.95-liter bottles which had been rinsed with distilled water. One of these 0.95-liter aliquots was sealed with a Teflon -lined cap; placed in an iced, insulated chest to maintain it at 4°C (39°F); and shipped by air for inductively coupled argon plasma emission spectrophotometry (ICAP) metal analysis. Initially, the second sample was stabilized by the addition of 5 ml (0.2 ounce) of concentrated nitric acid, capped and iced in the same manner as the first, and shipped by air to the contractor's facility for atomic-absorption metal analysis.

Because of subsequent EPA notification that the acid pH of the stabilized sample fell outside the limits permissible under Department of Transportation regulations for air shipment, stabilization of the second sample in the field was discontinued. Instead, this sample was acid-stabilized at the analytical laboratory.

After removal of the two 0.95-liter (1-quart) metals aliquots from the composite sample, the balance of the sample in the 11.4-liter (3-gallon) glass jug was subdivided for analysis of nonvolatile organics, conventional, and nonconventional parameters. If a portion of this 7.7-liter (2-gallon) sample was requested by an industry representative for independent analysis, a 0.95-liter (1-quart) aliquot was placed in a sample container supplied by the representative.

Sample Types 2 (cyanide) and 3 (total phenol) were stored in new bottles which had been iced and labeled, 1-liter (33.8-ounce) clear plastic bottles for Type 2, and 0.47-liter (16 ounce) amber glass for Type 3. The bottles had been cleaned by rinsing with

distilled water, and the samples were preserved as described below.

To each Type 2 (cyanide) sample, sodium hydroxide was added as necessary to elevate the pH to 12 or more (as measured using pH paper). Where the presence of chlorine was suspected, the sample was tested for chlorine (which would decompose most of the cyanide) by using potassium iodide/starch paper. If the paper turned blue, ascorbic acid crystals were slowly added and dissolved until a drop of the sample produced no change in the color of the test paper. An additional 0.6 gram (0.021 ounce) of ascorbic acid was added, and the sample bottle was sealed (by a Teflon -lined cap), labeled, iced, and shipped for analysis.

To each Type 3 (total phenol) sample, phosphoric acid was added as necessary to reduce the pH to 4 or less (as measured using pH paper). Then, 0.5 gram (0.018 ounce) of copper sulfate was added to kill bacteria, and the sample bottle was sealed (by a Teflon -lined cap), labeled, iced, and shipped for analysis.

Each Type 4 (volatile organics) sample was stored in a new 125-ml (4.2-ounce) glass bottle that had been rinsed with tap water and distilled water, heated to 105°C (221°F) for one hour, and cooled. This method was also used to prepare the septum and lid for each bottle. Each bottle, when used, was filled to overflowing, sealed with a Teflon -faced silicone septum (Teflon side down) and a crimped aluminum cap, labeled, and iced. Hermetic sealing was verified by inverting and tapping the sealed container to confirm the absence of air bubbles. (If bubbles were found, the bottle was opened, a few additional drops of sample were added, and a new seal was installed.) Samples were maintained hermetically sealed and iced until analyzed.

Wastewater samples were collected in two stages: screening and verification. Ideally, the screening phase involves collection of samples from every waste stream in the category. Pollutants that were not detected during screening were not considered further in the study. Because of the tight schedule of this study, there was not time to analyze all of the samples obtained during screening before verification sampling began. Therefore, verification samples were analyzed for almost all of the toxic pollutants, as well as selected conventional and nonconventional pollutants.

Sample Analysis. Samples were sent by air to one of six laboratories: Cyrus Wm. Rice Division of NUS Corporation of Pittsburgh, Pennsylvania; ARO, Inc. of Tullahoma, Tennessee; Systems Science and Software (SSS) of San Diego, California; Spectrix of Houston, Texas; Radian Corporation of Austin, Texas; and Versar, Inc. of Springfield, Virginia. Screening samples

went to Rice; there the samples were split for metals analysis. An aliquot of each metal sample received by Rice was sent to EPA's Chicago laboratory for ICAP analysis; Rice retained an aliquot for atomic absorption spectrophotometry (AA). Twenty-two metals were analyzed by ICAP, and five metals were analyzed by AA, as follows:

Metals Analyzed by ICAP

Calcium	Copper
Magnesium	Iron
Sodium	Manganese
Silver	Molybdenum
Aluminum	Nickel
Boron	Lead
Barium	Tin
Beryllium	Titanium
Cadmium	Vanadium
Cobalt	Yttrium
Chromium	Zinc

Metals Analyzed by AA

Antimony
Arsenic
Selenium
Thallium
Mercury

Many of the metals analyzed by ICAP are not classified as toxic pollutants and are not reported in this document as such. They are considered only because they consume lime and increase sludge production in wastewater treatment facilities.

Verification samples went to Radian or ARO when metal analysis was performed by AA. Since metals analysis of screening samples was complete before verification metals analysis began, Radian analyzed the samples only for metals shown to be significant in the aluminum forming category or those expected to consume large amounts of lime.

Some verification samples were sent to System, Science and Software (SSS), Spectrix, Radian, or Rice, where analysis for the organic toxic pollutants was done.

Due to their very similar physical and chemical properties, it is extremely difficult to separate the seven polychlorinated biphenyls (pollutants 106 to 112) for analytical identification and quantification. For that reason, the concentrations of the polychlorinated biphenyls are reported by the analytical labora-

tory in two groups: one group consists of PCB-1242, PCB-1254, and PCB-1221; the other group consists of PCB-1232, PCB-1248, PCB-1260, and PCB-1016. For convenience, the first group will be referred to as PCB-1254 and the second as PCB-1248.

Because the analytical standard for TCDD was judged to be too hazardous to be made generally available, samples were never analyzed for this pollutant. There is no reason to expect the TCDD would be present in aluminum forming wastewater.

Past studies by EPA and others have identified many nontoxic pollutant parameters useful in characterizing industrial wastewaters and in evaluating treatment process removal efficiencies. Some of these pollutants may also be selected as reliable indicators of the presence of specific toxic pollutants. For these reasons, a number of nontoxic pollutants were also studied for the aluminum forming category. These additional pollutants may be divided into two general groups:

Conventional	Nonconventional
total suspended solids (TSS)	aluminum
oil and grease	chemical oxygen demand (COD)
pH	phenols (total)
	total organic carbon (TOC)
	total dissolved solids (TDS)

In addition, samples were analyzed for calcium, magnesium, alkalinity, and sulfate in order to provide the data necessary to evaluate the cost of lime and settle treatment.

The analytical quantification levels used in evaluation of the sampling data reflect the accuracy of the analytical methods employed. Below these concentrations, the identification of the individual compounds is possible, but quantification is difficult. Pesticides and PCB's can be analytically quantified at concentrations above 0.005 mg/l, and other organic toxic levels above 0.010 mg/l levels associated with toxic metals are as follows: 0.100 mg/l for antimony; 0.010 mg/l for arsenic; 1 x for cadmium; 0.005 mg/l for chromium; 0.009 mg/l for copper; 0.010 mg/l for cyanide; 0.02 mg/l for lead; 0.0001 mg/l for mercury; 0.005 mg/l for nickel; 0.010 mg/l for selenium; 0.020 mg/l for silver; 0.100 mg/l for thallium; and 0.050 mg/l for zinc.

These detection limits are not always the same as those published in the proposed development document, some of which were in error; nor are they always the same as some of the detection limits published elsewhere for these same pollutants by the same analytical methods. The detection limits used were reported

with the analytical data and hence are the appropriate limits to apply to the data. Detection limit variation can occur as a result of a number of laboratory-specific, equipment-specific, and daily operator-specific factors. These factors can include day-to-day differences in machine calibration, variation in stock solutions, and variation in operators.

Quality Control. Quality control measures used in performing all analyses conducted for this program complied with the guidelines given in "Handbook for Analytical Quality Control in Water and Wastewater Laboratories" (published by EPA Environmental Monitoring and Support Laboratory, Cincinnati, Ohio, 1976). As part of the daily quality control program, blanks (including sealed samples of blank water carried to each sampling site and returned unopened, as well as samples of blank water used in the field), standards, and spiked samples were routinely analyzed with actual samples. As part of the overall program, all analytical instruments (such as balances, spectrophotometers, and recorders) were routinely maintained and calibrated.

The atomic-absorption spectrometer used for metal analysis was checked to see that it was operating correctly and performing within expected limits. Appropriate standards were included after not more than 10 samples. Also, approximately 15 percent of the analyses were spiked with distilled water to assure recovery of the metal of interest. Reagent blanks were analyzed for each metal, and sample values were corrected if necessary.

Historical Data

A useful source of long-term or historical data available for aluminum forming plants are the Discharge Monitoring Reports (DMR's) completed as a part of the National Pollutant Discharge Elimination System (NPDES). DMR's were obtained through the EPA regional offices and state regulatory agencies for the year 1982, and up to the second quarter of 1983 in some cases. The DMR's present a summary of the analytical results from a series of samples taken during a given month for the pollutants designated in the plant's permit. In general, minimum, maximum, and average values, in mg/l or lbs/day, are presented for such pollutants as total suspended solids, aluminum, oil and grease, pH, chromium, and zinc. The samples were collected from the plant outfall(s), which represents the discharge(s) from the plant. For facilities with wastewater treatment, the DMR's provide a measure of the performance of the treatment system. In theory, these data could then serve as a basis for characterizing treated wastewater from aluminum forming plants; however, there is no influent to treatment information and too little information on the performance of the plant at the time the samples were collected to use these

data in evaluating the performance of various levels of treatment. They do serve as a set of data that was used to compare to the treatment effectiveness concentrations presented in Section VII (p.).

PRESENTATION OF WASTEWATER CHARACTERISTICS

To simplify the presentation of the sampling data, tables were developed that present ranges of concentrations with the number of samples in which each pollutant was found within these ranges. For each waste stream a frequency of occurrence table is presented for all 129 toxic pollutants. For those pollutants detected above analytically quantifiable concentrations in any sample of that wastewater stream, the actual analytical data are presented in a second table. Where no data are listed for a specific day of sampling, it indicates that the wastewater samples for the stream were not collected.

The statistical analysis of data includes some samples measured at levels considered not quantifiable. The base neutrals, acid fraction, and volatile organics are considered not quantifiable at concentrations equal to or less than 0.010 mg/l. Below this level, organic analytical results are not quantitatively accurate; however, the analyses are useful to indicate the presence of a particular pollutant. Nonquantifiable results are designated in the tables with an asterisk (double asterisk for pesticides).

When calculating averages from the organic sample data, nonquantifiable results (* or **) were handled as zeros. Since an "*" or "**" denotes a small but unquantified amount, it is used as a zero in calculation of averages to minimize overstatement of the amount present. Organics data reported as not detected (ND) are not averaged, since ND signifies that the pollutant was not present in the sample. For example, three samples reported as ND, *, 0.021 mg/l would average as 0.010 mg/l.

In the following discussion, water use and field sampling data are presented for each core operation by subcategory. Discussions of the water use and discharge rates and field sampling data for the ancillary operations follow thereafter. Appropriate tubing or background blank and source water concentrations are presented with the summaries of the sampling data. Figures V-1 through V-25 show the location of wastewater sampling sites at each facility. The method by which each sample was collected is indicated by number, as follows:

1 one-time grab
2 24-hour manual composite
3 24-hour automatic composite

4 48-hour manual composite
5 48-hour automatic composite
6 72-hour manual composite
7 72-hour automatic composite
8 8-hour manual composite
9 8-hour automatic composite

CORE OPERATIONS UNIQUE TO MAJOR FORMING PROCESSES

Rolling

Rolling with Neat Oils Spent Lubricant. As described in Section III, the cold rolling of aluminum products typically requires the use of mineral oil or kerosene-based lubricants. The oils are usually recycled with in-line filtration and periodically disposed of by sale to an oil reclaimer or by incineration. Because discharge of this stream is not practiced, limited flow data were available for analysis. Of the 50 plants surveyed that use neat oil rolling lubricants, water (oil) use could be calculated for only four. These data are presented and summarized in Table V-1. None of the plants provided sufficient flow data to calculate the degree of recycle practiced or the discharge flow of this stream.

Toxic pollutant frequency occurence data are presented in Table V-2. Wastewater sampling data for neat oil lubricants are presented in Table V-3.

Rolling with Emulsions Spent Emulsion. Of the plants surveyed, 29 rolling operations were identified that use oil-in-water emulsions as coolants and lubricants. Rolling emulsions are typically recycled using in-line filtration treatment. Some plants discharge a bleed stream, but periodic discharge of the recycled emulsion is more commonly practiced.

Water use, wastewater factors, and percent recyle corresponding to this stream are summarized in Table V-4.

Toxic pollutant frequency occurrence data are presented in Table V-5. Table V-6 summarizes the field sampling data for toxic and selected conventional and nonconventional pollutants. This stream is characterized by high levels of COD (79.8 to 1,520,000 mg/l), TOC (38.0 to 560,000 mg/l), and phenolic compounds as measured by total phenolics-4AAP (0.210 to 49.0 mg/l). Several toxic organic pollutants were detected in the spent emulsions at significant concentrations. These included several of the polynuclear aromatic hydrocarbons (PAH) and polychlorinated biphenyls (PCBs).

Roll Grinding Spent Emulsion. The steel rolls used in rolling operations require periodic machining to remove aluminum buildup and surface imperfections. This process is referred to as roll grinding. Oil-in-water emulsions are often used as coolants and lubricants during roll grinding operations. Data on roll grinding spent lubricants from the dcp's and additional data collected after proposal have been included in the data base for this waste stream. Although the available data for this stream are not as extensive as for other aluminum forming processes, they did provide a basis for the analysis of water use and wastewater rates typically associated with roll grinding. This information is summarized in Table V-7, along with the degree of recycle or disposal mode practiced at the plants.

One roll grinding operation was sampled prior to proposal. Unfortunately, the sampled facility did not use an emulsified lubricant. Additional data gathered since proposal, however, include three samples of roll grinding spent emulsions. Toxic pollutant frequency occurrence data for the nonemulsified stream (stream code U-7) and for the three spent emulsions (stream codes CC-2, EE-11, and EE-12) are presented in Table V-8. The field sampling data are summarized in Table V-9. This waste stream is characterized by high levels of oil and grease (11 to 780 mg/l), suspended solids (9.0 to 120 mg/l), total dissolved solids (340 to 2,200 mg/l), and COD (230 to 850 mg/l).

Extrusion

Extrusion Die Cleaning Bath. As discussed in Section III (p. 101), the steel dies used in extrusion require frequent dres sing to ensure the necessary dimensional precision and surface quality of the product. The aluminum that has adhered to the die orifice is typically removed by soaking the die in a caustic solution, although a few plants indicated that mechanical brush ing could be used to clean very simple dies. Water use and wastewater values corresponding to the die cleaning caustic bath were calculated for 37 extrusion plants for which information was available. This information is presented and statistically summarized in Table V-10.

Although recycle of the caustic solution, as such, is never prac ticed, periodic discharge of these stagnant baths is common. For this reason, water use (make-up rate) and wastewater (discharge rates) are normally identical. Variations in the water use in caustic die cleaning baths may result from the following:

Intricacy and size of the die orifice. Aluminum alloy being extruded. Concentration of caustic used. Individual plant practices.

The available data are not sufficient, however, to analyze quantitatively the effect of these factors.

Wastewater samples were collected from three extrusion die cleaning baths during the sampling program. Wastewater data for extrusion die cleaning baths are summarized in Tables V-11 and V-12. The wastewater characteristics of this stream are similar to discharges from cleaning or etching baths.

Extrusion Die Cleaning Rinse. After caustic treatment, the extrusion dies are rinsed with water. At some plants, the dies are simply hosed off; at others, a rinse tank is used for this purpose. Most of the plants contacted indicated that rinsing was required to avoid damage to the die and the material being extruded. Water use and wastewater factors could be calculated for only nine of the 30 plants. This information is presented and summarized in Table V-13. Water use does not appear to be affected by differences in rinsing method (i.e., hose or rinse tank). Other factors, such as the intricacy of the dies, concentration of caustic used, aluminum alloy being extruded, and individual plant practices, could account for minor variations in water use. The degree of influence of these factors cannot be determined from the available data.

Toxic pollutant frequency occurrence data are presented in Table V-14. Table V-15 summarizes the field sampling data for toxic and selected conventional and nonconventional pollutants detected above the analytically quantifiable levels. This waste stream is characterized by high concentrations of aluminum (9.0 to 430 mg/l), dissolved solids (3,200 to 7,200 mg/l), and low concentrations of suspended solids (28 to 120 mg/l) and oil and grease (<3.0 to 17 mg/l). Only five of the toxic organic pollutants were detected during sampling.

Extrusion Die Cleaning Scrubber Liquor. Of the plants surveyed, two indicated the use of wet scrubbers associated with their die cleaning operations. Wet scrubbers may be required to treat fumes from the caustic die cleaning operation in order to control air pollution emissions and ensure a safe working environment. Water use and wastewater factors are calculated in Table V-16. Toxic pollutant frequency occurrence data are presented in Table V-17. Table V-18 summarizes the field sampling data for toxic and selected conventional and nonconventional pollutants detected above the analytically quantifiable levels. This waste stream is characterized by moderate levels of oil and grease (58 mg/l) and dissolved solids (330 mg/l). The toxic metals, when detected, were present at levels well below their treatability levels.

Extrusion Press Scrubber Liquor. Of the 163 extrusion plants surveyed, two plants reported the use of wet scrubbers at the

extrusion presses to remove caustic fumes. These fumes occur as a result of cleaning aluminum from extrusion presses between operations.

One of these plants reported sufficient data for the calculation of wastewater values. The scrubber at this plant runs continu ously without recycle and has water use and wastewater values of 2,071 l/kkg. The other plant, while not supplying enough infor mation to allow calculation of these values, reported that their scrubber is only run intermittently. These data appear in Table V-19. This waste stream was sampled at only one plant. Toxic pollutant frequency occurrence data are presented in Table V-20. The field sampling data are summarized in Table V-21. As can be seen in the table, this stream is characterized by low levels of suspended solids (5 mg/l) and elevated levels of dissolved solids (360 mg/l). All of the toxic metals were detected well below their treatability levels.

Extrusion Dummy Block Contact Cooling Water. As described in Section III (p.), a dummy block is placed between the ram and ingot during the direct extrusion process. After the extrusion is complete, the ingot butt and dummy block are released from the press. Typically, the dummy blocks are allowed to air cool; how ever, of the 163 extrusion plants, three indicated that water was used for this purpose. As can be seen in Table V-22, none of these plants recycle the cooling water. Data were available to calculate water use and wastewater discharge rates for two of the three plants.

Toxic pollutant frequency occurrence data are presented in Table V-23. Data from wastewater sampling of dummy block cooling water are presented in Table V-24. This waste stream is characterized by elevated concentrations of oil and grease (74 mg/l) and dis solved solids (50 mg/l). Only one toxic organic pollutant (chloroform) was detected (0.08 mg/l). None of the toxic metals were detected.

Forging

There are no core waste streams that are unique to the forging operation.

Drawing

Drawing with Neat Oils Spent Lubricant. Of the 277 plants surveyed, 66 draw aluminum products using neat oil lubricants. Two plants avoid discharge of this stream by 100 percent recycle of the drawing oil. Most of the plants dispose of the spent oil by incineration or contractor hauling and did not provide the flow data required to calculate water (oil) use and wastewater

discharge (oil) values. Table V-25 shows the water use and wastewater values for the plants that supplied sufficient information for the calculation of these values.

No wastewater samples of spent drawing neat oils were collected.

Drawing with Emulsions or Soaps Spent Emulsion. Of the plants surveyed, nine draw aluminum products using oil-in-water emulsions, and four indicated that soap solutions were used as drawing lubricants. Water use and wastewater factors calculated for this stream are presented and summarized in Table V-26. As can be seen, several plants recycle the emulsions or soap solutions, then discharge them periodically after their lubricating properties are exhausted. Review of the data shows that there is considerable variability in the wastewater discharge rates. This variation may be somewhat related to difference in the dimension of wire being drawn. Wastewater discharge factors were calculated for seven of the 13 plants.

Toxic pollutant frequency occurrence data are presented in Table V-27. Table V-28 summarizes the field sampling data for the toxic and selected conventional and nonconventional pollutants detected above analytically quantifiable levels. This waste stream is characterized by extremely high levels of oil and grease (51,540 mg/l) and the presence of certain toxic organic pollutants.

Swaging. Swaging is frequently associated with drawing operations and has been included in the Drawing with Neat Oils Subcategory. Swaging is used as an initial step in drawing with tube or wire. By repeated blows of one or more pairs of opposing dies, a solid point is formed. This can then be inserted through the die and gripped for drawing. In a few cases, swaging is used in tube forming without a subsequent drawing operation. Some lubricants, such as waxes and kerosene, may be used to prevent adhesion of metal or oxide on the dies. Discharge of swaging lubricants was not reported by any of the plants surveyed in this study.

CORE OPERATIONS NOT UNIQUE TO SPECIFIC MAJOR FORMING PROCESSES

Sawing Spent Lubricant. Although sawing is associated with nearly all aluminum forming operations, only 12 of the plants surveyed reported the use of saw oil emulsions. Because plants frequently failed to mention minor streams that are not dis charged, the actual number of plants using saw lubricants may be much higher. The lubricants are frequently recycled and, in most instances, discharge from the system is limited to carryover and disposal by contractor hauling. Only three plants reported direct or indirect discharge of saw oils.

Water use and wastewater factors were calculated for plants pro viding flow and production data corresponding to the stream. These factors are shown and summarized in Table V-29.

Field samples of sawing spent lubricant from three plants were collected. The wastewater characteristics of this waste stream are presented in Tables V-30 and V-31.

Degreasing Spent Solvents. Although 34 solvent degreasing operations have been identified from dcp responses, no discharge is typically associated with this process. Vapor degreasing, the predominant method of solvent cleaning in the aluminum forming industry, is described in Section III (p. 113). A number of toxic organic pollutants, including trichloroethylene, 1,1,1-trichloroethane, and perchloroethylene, are commonly used solvents for vapor degreasing. The solvents are frequently reclaimed by distillation, either on-site or by an outside recovery service.

Toxic pollutant frequency occurrence data are presented in Table V-32. Field sampling data for cleaning solvent streams are sum marized in Table V-33. Besides the presence of volatile organic pollutants mentioned above, this waste stream is characterized by high levels of oil and grease (2,180 mg/l), COD (330 mg/l), and TOC (143 mg/l).

Annealing Atmosphere Scrubber Liquor. As described in Section III (p.), annealing is used to soften work-hardened and solution-heat-treated alloys, to relieve stress, and to stabilize the properties and dimensions of the aluminum product. In some cases, it is necessary to control the atmosphere within the annealing furnace. At elevated temperatures, the presence of water vapors can disrupt the oxide film on the surface of the product, especially if the atmosphere is also contaminated with ammonia or sulfur compounds. Inert gas atmospheres can be used within the furnace to avoid possible detrimental effects, such as blistering, discoloration, and a decrease in tensile properties. At most plants, natural gas is burned to generate an inert atmo sphere. At one of the aluminum forming plants surveyed, flue gases from the burning of fuel to heat the annealing furnace are used as the furnace atmosphere. Due to the sulfur content of furnace fuels, however, the off-gases require treatment by wet scrubbers before they can be used as an inert atmosphere for heat treatment. The scrubber in use at this plant was reported to require a relatively large flow of water which is extensively recycled (more than 99 percent). The water use and wastewater values calculated for this stream are shown in Table V-34.

Toxic pollutant frequency occurrence data are presented in Table V-35. Table V-36 summarizes the field sampling data for those

pollutants detected above analytically quantifiable levels. This waste stream is characterized by high levels of sulfates if the furnace fuel has a high sulfur content.

ANCILLARY OPERATIONS

Heat Treatment

Solution and Press Heat Treatment Contact Cooling Water. Heat treatment of aluminum products frequently involves the use of a water quench in order to achieve desired metallic properties. At the 277 aluminum forming plants surveyed, 88 solution heat treatment processes were identified that involve water quenching.

The field samples from heat treatment quenching processes have been identified and compiled according to the aluminum forming operation that it follows (i.e., rolling, forging, drawing, and extrusion). Additional differentiation was made between press and solution heat treatment of extrusions. The wastewater streams and the tables which list the water use, percent recycle, wastewater values, frequency of occurrence of toxic pollutants, and sampling data for toxic and conventional and nonconventional pollutants are listed below:

Wastewater Stream	Water Use, Percent Recycle, Wastewater Values	Toxic Pollutant Frequency of Occurrence	Field Sampling Data
Rolling Solution Heat Treatment Contact Cooling Water	Table V-37	Table V-38	Table V-39
Extrusion Press Heat Treatment Contact Cooling Water	Table V-40	Table V-41	Table V-42
Extrusion Solution Heat Treatment Contact Cooling Water	Table V-43	Table V-44	Table V-45
Forging Solution Heat Treatment Contact Cooling Water	Table V-46	Table V-47	Table V-48
Drawing Solution Heat Treatment Contact Cooling Water	Table V-49	Table V-50	Table V-51

The water use factors calculated for this stream were analyzed to determine if a relationship exists between water use requirements and the type of products being quenched (extrusions, forgings, etc.) or the method of heat treatment used (e.g., press versus

solution heat treatment of extrusions). It was determined that neither of these factors account for the variations in water use. Heat treatment water requirements are independent of the major forming process which precedes the heat treatment operation. The water requirements are a function of several variables, including the mass and surface area of the aluminum, the time allowed for cooling, and the temperature gradient.

Since the water use requirements are independent of the major forming process which precedes the operation, it is assumed that the pollutant loadings in the discharged wastewater are also independent and will be similar for the various heat treatment operations. For regulatory purposes the wastewater discharge values for all the heat treatment operations will be combined into a single value for all solution and press heat treatment operations.

Cleaning or Etching Bath. As described in Section III (p. 112), a variety of chemical solutions are used for cleaning purposes or to provide the desired finish for formed aluminum products. These treatments and their associated rinses are usually combined in a single line of successive tanks. Wastewater discharged from these lines is typically commingled prior to treatment or discharge.

The acid, alkaline, and detergent solutions used in cleaning or etching lines are usually maintained as stagnant baths into which the products are immersed. Chemicals are added as required to make up for losses due to evaporation, carryover, and splash-out. In this survey, most of the plants with cleaning or etching lines did not indicate discharge of these chemical dips. A few plants reported periodic discharge of cleaning or etching compounds, usually following treatment. Other plants indicated that the chemical dip is hauled periodically by an outside contractor or disposed of on-site. Water use and wastewater discharge rates for this stream are presented in Table V-52.

Table V-53 presents the frequency of occurrence of toxic pollu tants for this wastewater stream type. Table V-54 summarizes the field sampling data for those pollutants detected above analyti cally quantifiable levels. This waste stream is characterized by high levels of several of the toxic metals, specifically copper; chromium and lead; oil and grease (<1 to 1,900 mg/l); suspended solids (1 to 1,100 mg/l); aluminum (0.300 to 70,000 mg/l); dis solved solids (586 to 284,000 mg/l); and TOC (1 to 6,260 mg/l).

Cleaning or Etching Rinse. Rinsing is usually required following successive chemical treatments within cleaning or etching lines. The most common methods are spray rinsing or immersion in a continuous-flow rinse tank. The number of rinses within a given

line varied from plant to plant, depending on the kind of surface treatment applied.

Water use and wastewater values calculated for the cleaning or etch lines at aluminum forming plants are shown in Table V-55. As can be seen, cleaning or etching lines with multiple rinses tend to have higher water use and wastewater discharge values than those with single rinses. Direct correlations between these factors cannot be established on the basis of these data. A more detailed discussion of factors which could account for variations in wastewater discharge of this stream is presented in Section IX. The percent of recycled rinse water could not be calculated because of the difficulty in defining the amount of water used. This was caused by countercurrent and stagnant rinses, carryover, and other practices peculiar to the cleaning or etching lines in the aluminum forming category.

Toxic pollutant frequency occurrence data are presented in Table V-56. Table V-57 summarizes the field sampling data for those pollutants detected above analytically quantifiable levels. This waste stream, like cleaning or etching baths, is characterized by elevated concentrations of the toxic metals, copper, chromium, and lead. In addition, nickel and zinc were present at high levels in many samples. Oil and grease and suspended solids were also present at high levels, but lower relative to the baths, as would be expected.

Cleaning or Etching Scrubber Liquor. Of the 40 plants with cleaning and etching lines, seven indicated that wet scrubbers are associated with these operations. Fumes from caustic or acid baths may require treatment to control air pollution emissions and ensure a safe working environment. Sufficient flow data were available to calculate water use from one of the seven plants, and wastewater values were available from four of the seven plants. This information is summarized and presented in Table V-58.

Toxic pollutant frequency occurrence data are presented in Table V-59. Table V-60 summarizes the field sampling data for those pollutants detected above the analytically quantifiable levels. This waste stream is characterized by low levels of contamina tion, as exhibited by suspended solids at 12 mg/l.

Forging Scrubber Liquor. Of the 16 forging plants surveyed, three indicated that wet scrubbers were used to control particulates and smoke generated from the partial combustion of oil-based lubricants in the forging process. Water use and wastewater discharge rates are summarized in Table V-61.

Toxic pollutant frequency occurrence data are presented in Table V-62. Table V-63 summarizes the field sampling data for the toxic and selected conventional and nonconventional pollutants detected above the analytically quantifiable levels. This waste stream is characterized by the presence of eight toxic organic pollutants, five of which were polynuclear aromatics. The five were present at concentrations ranging from 0.018 to 0.075 mg/l. High levels of oil and grease (162 mg/l), COD (349 mg/l), and dissolved solids (388 mg/l) are also characteristic of this waste stream.

Casting

Direct Chill Casting Contact Cooling Water. Of the plants surveyed, 61 aluminum forming, 25 primary aluminum plants, and five plants in the secondary aluminum subcategory indicated that they cast aluminum or aluminum alloys using the direct chill method. Because the ingot or billet produced by direct chill casting is used as stock for subsequent rolling or extrusion, this wastewater stream is considered to be an ancillary stream for the Rolling with Emulsions and Extrusion Subcategories.

Contact cooling water is used in the direct chill casting method to spray the ingot or billet as it drops from the mold and then to quench it as it is immersed in a cooling tank at the bottom of the casting pit. As described in Section III (p.), the cool ing water may be contaminated by lubricants applied to the mold before and during the casting process. Some plants discharge this cooling water stream without recycle, but it is commonly recirculated through a cooling tower. Even with recycle, peri odic discharge or the discharge of a continuous bleed stream is required to prevent the accumulation of dissolved solids. Of the 48 aluminum forming plants for which information was available, 30 recycle the contact cooling water stream used in direct chill casting. The average recycle rate at these plants was 96 per cent, but the reported values ranged between 50 and 100 percent.

The calculated water use, percent recycle and wastewater values corresponding to direct chill casting cooling water streams at aluminum forming plants are presented in Table V-64. The calcu lated water use, percent recycle, and wastewater values for primary aluminum and secondary aluminum plants with direct chill casting operations are presented in Table V-65.

Toxic pollutant frequency occurrence data are presented in Table V-66. The field sampling data for those pollutants detected above analytically quantifiable levels are summarized in Table V-67. This waste stream is characterized by the presence of certain toxic organic pollutants at levels ranging from 0.500 mg/l to below the level of detection. It is also characterized

by elevated levels of oil and grease (5 to 214 mg/l) and suspended solids (<1 to 220 mg/l).

Continuous Rod Casting Contact Cooling Water. Three of the aluminum forming plants surveyed in this study use continuous casting methods to manufacture aluminum rod for subsequent drawing. Four plants from the primary aluminum subcategory of the nonferrous metals forming category also have continuous rod casting operations. This process, also referred to as Properzi or wheel casting, is described in Section III (p.). Although the cooling water associated with continuous rod casting is, for the most part, noncontact, some contact with the freshly cast aluminum bar as it leaves the ring mold is difficult to avoid. For this reason, the cooling water used in continuous rod casting operations is classified as an ancillary stream associated with the Drawing with Neat Oils and Drawing with Emulsions or Soaps Subcategories.

Water use and wastewater factors corresponding to this stream could be calculated for only one of the aluminum forming continuous rod casting plants. At this facility no recycle of the cooling water was practiced. Water use and wastewater rates could not be calculated for the other aluminum forming plant known to recycle and periodically discharge this stream. The other plant indicated that contact cooling water was not used. This information is presented in Table V-68. Water discharge of this waste stream was reported from three primary aluminum plants. All plants reported recycle of this waste stream; however, only two reported enough information to calculate a discharge flow. This information is presented in Table V-69.

No field samples of this cooling water stream were collected. Because of the similarities in raw materials used, water usage in the processing steps, and product characteristics, it is assumed that the wastewater characteristics of this stream are similar to those of the direct chill casting contact cooling water waste stream. These data are presented in Tables V-66 and V-67.

Continuous Rod Casting Spent Lubricant. As discussed in Section III (p. 107), in continuous casting operations, oil-in-water emulsions are used as lubricants. Both of the rod casting plants providing information practiced total recycle of this stream, although one aluminum forming plant indicated that periodic disposal was required. Sufficient flow and production data were not available to calculate water use or wastewater flows for this stream. Some recycle information is presented in Table V-60.

No continuous rod casting lubricant field samples were collected. Because of the similarities in raw materials used, lubricant usage in the processing steps, and the nature of the

lubricants used in the continuous rod casting operation, it is assumed that the wastewater characteristics of this waste stream are similar to those of the rolling with emulsions spent emulsion waste stream. These data are presented in Tables V-5 and V-6.

Continuous Sheet Casting Spent Lubricant. Of the 277 plants surveyed in the aluminum forming study, 11 cast aluminum sheet products using continuous techniques such as the Hunter or Hazelett methods. No plants in the primary aluminum industry reported casting aluminum sheet products using continuous methods. While continuous sheet or strip casting uses only noncontact cooling water, a few plants indicated that lubricants were required for the associated rolling line. Oil-in-water emulsions, graphite solutions, and aqueous solutions of magnesia can be used for this purpose. Of the plants surveyed, six reported the use of lubricants in their continuous sheet casting operations. The lubricants were always recycled and two of the plants indicated that periodic disposal of this stream was required. Water use and wastewater rates of this stream are shown for these two plants and for a third plant which did not indicate the discharge mode in Table V-71. Two other plants reported periodic disposal of the lubricant, but provided no flow data. Six additional facilities with continuous sheet casting did not indicate the use of a rolling lubricant.

No wastewater samples were collected from continuous sheet cast ing operations. Because of the similarities in the raw materials used, lubricant usage in the processing steps, and the nature of the type of lubricant used in this operation, it is assumed that the wastewater characteristics of this waste stream are similar to those of the rolling with emulsions spent emulsion waste stream. These data are presented in Tables V-5 and V-6.

Stationary Casting. In stationary casting, molten aluminum is poured into specific shapes for rolling and further processing. It was observed that in 14 plants, this is done without the discharge of any contact cooling water. Frequently, the aluminum is allowed to air cool and solidify. Often, the stationary molds are internally cooled with noncontact cooling water. In some plants, a small amount of water or mist is applied to the top of the stationary cast aluminum to promote more rapid solidification and allow earlier handling. In most cases, contact cooling water is either collected and recycled or it evaporates.

Degassing Scrubber Liquor. The purpose, variations, and limitations of metal treatment technologies are described in Section III (p. 105). While the wastewater sampling program was in progress, two of the plants visited had wet air pollution control devices cleaning the degassing fumes. Since that time, the plant that was sampled replaced the wet scrubbers with dry

devices. Only one of the 80 plants with casting operations surveyed in this study continues to use wet air pollution controls in association with their metal treatment operations prior to casting. Sufficient data were not available from this plant, however, to calculate the water use or wastewater flow of this stream. There have been four plants that have gone to the alternative degassing air pollution control methods since the draft document was written. Four plants in the primary aluminum subcategory reported using wet air pollution controls in their metal treatment operations. Three of these plants provided information on water use and wastewater flows. This information is presented in Table V-72.

Toxic pollutant frequency occurrence data are presented in Table V-73. Table V-74 summarizes the field sampling data for those pollutants detected above analytically quantifiable levels. This wastewater is characterized by slightly elevated levels of suspended solids (<38 mg/l).

Extrusion Press Hydraulic Fluid Leakage

The extrusion of hard alloy aluminum frequently requires the use of an extrusion press hydraulic fluid, which is typically an oil-in-water emulsion. Table V-75 presents the wastewater discharge data on five extrusion press leakage streams. Discharges of this stream range from 258 l/kkg to 2,554 l/kkg, with two plants prac ticing recycle.

Wastewater samples of extrusion press leakage were collected at one plant during the post proposal sampling effort. Toxic pollu tant frequency of occurence data are presented in Table V-76 and sampling data are presented in Table V-77. This waste stream is characterized by elevated levels of oil and grease (490 to 7,300 mg/l).

Additional Wastewater Samples

Table V-78 presents the field sampling data for all raw waste samples not previously presented. These samples represent com bined wastewater streams, miscellaneous waste streams, or streams not considered in the scope of this regulation. Table V-79 presents wastewater discharge flow data for four plants on miscellaneous nondescript wastewater flows.

TREATED WASTEWATER SAMPLES

Tables V-80 through V-95 present the field sampling data for the treated wastewater from 16 of the 25 sampled plants. Treated wastewater data for some of these plants were incorporated into the larger data base which was used to determine the treatment

effectiveness for different control systems. The treatability limits selected for the aluminum forming control options are presented in Section VII (Control and Treatment Technology) (Table VII-20, p. 807).

Most of the treated wastewater streams analyzed were collected after some form of oil separation (Streams D-15, E-8, and U-3) and emulsion breaking process (Streams B-7, C-9, E-9, P-7, U-9, AA-7, and EE-6) (see Figures V-1 through V-25). As expected, these streams showed lower concentrations of oil and grease (<100 mg/l) than found in the influent raw waste streams. In addition, one stream (Stream B-8) was sampled after an ultrafiltration process which removes a large percentage of the oil and grease from the raw waste. Also, samples collected after settling ponds, lagoons, or clarifiers (Streams D-4, E-11, J-6, K-5, Q-4, AA-7, BB-12, DD-16, and EE-8) showed reduced levels of suspended solids. Lime and settle system effluents (Streams D-14, K-5, and EE-8) had toxic metal concentrations below the detection limits for most of the toxic metals.

Table V-1

ROLLING WITH NEAT OILS SPENT LUBRICANTS

Plant	Water Use l/kkg	Water Use gal/ton	Percent Recycle	Wastewater l/kkg	Wastewater gal/ton
1	10.17	2.440	*	*	*
2	4.586	1.100	*	*	*
3	4.753	1.140	*	*	*
4	3.144	0.7540	*	*	*

*Data not available.

Statistical Summary

Minimum	3.144	0.7540
Maximum	10.17	2.440
Mean	5.666	1.359
Median	4.670	1.120
Sample:	4 of 50 plants	

Note: Table does not include 46 plants which provided insufficient information to calculate water use and wastewater values.

Table V-2

FREQUENCY OF OCCURRENCE OF TOXIC POLLUTANTS
ROLLING WITH NEAT OILS SPENT LUBRICANTS
RAW WASTEWATER

	Pollutant	Analytical Quantification Level (mg/l)	Number of Streams Analyzed	Number of Samples Analyzed	Number of Times Observed in Samples (mg/l) ND-0.010	0.011-0.100	0.101-1.000	1.000+
1.	acenaphthene	0.010	1	2	2			
2.	acrolein	0.010	1	1	1			
3.	acrylonitrile	0.010	1	1	1			
4.	benzene	0.010	1	1		1		
5.	benzidine	0.010	1	2	2			
6.	carbon tetrachloride	0.010	1	1	1			
7.	chlorobenzene	0.010	1	1	1			
8.	1,2,4-trichlorobenzene	0.010	1	2	2			
9.	hexachlorobenzene	0.010	1	2	2			
10.	1,2-dichloroethane	0.010	1	1	1			
11.	1,1,1-trichloroethane	0.010	1	1			1	
12.	hexachloroethane	0.010	1	2	2			
13.	1,1-dichloroethane	0.010	1	1	1			
14.	1,1,2-trichloroethane	0.010	1	1	1			
15.	1,1,2,2-tetrachloroethane	0.010	1	1	1			
16.	chloroethane	0.010	1	1	1			
17.	bis(chloromethyl)ether	0.010	1	2	2			
18.	bis(chloroethyl)ether	0.010	1	2	2			
19.	2-chloroethyl vinyl ether	0.010	1	1	1			
20.	2-chloronaphthalene	0.010	1	2	2			
21.	2,4,6-trichlorophenol	0.010	1	2	2			
22.	p-chloro-m-cresol	0.010	1	2	2			
23.	chloroform	0.010	1	1	1			
24.	2-chlorophenol	0.010	1	2	2			
25.	1,2-dichlorobenzene	0.010	1	2	2			
26.	1,3-dichlorobenzene	0.010	1	2	2			
27.	1,4-dichlorobenzene	0.010	1	2	2			
28.	3,3'-dichlorobenzidine	0.010	1	2	2			
29.	1,1-dichloroethylene	0.010	1	1	1			
30.	1,2-trans-dichloroethylene	0.010	1	1	1			
31.	2,4-dichlorophenol	0.010	1	2	2			
32.	1,2-dichloropropane	0.010	1	1	1			
33.	1,3-dichloropropene	0.010	1	1	1			
34.	2,4-dimethylphenol	0.010	1	2	2			
35.	2,4-dinitrotoluene	0.010	1	2	2			
36.	2,6-dinitrotoluene	0.010	1	2	2			
37.	1,2-diphenylhydrazine	0.010	1	2	2			
38.	ethylbenzene	0.010	1	1			1	
39.	fluoranthene	0.010	1	2	2			

Table V-2 (Continued)

FREQUENCY OF OCCURRENCE OF TOXIC POLLUTANTS
ROLLING WITH NEAT OILS SPENT LUBRICANTS
RAW WASTEWATER

	Pollutant	Analytical Quantification Level (mg/l)	Number of Streams Analyzed	Number of Samples Analyzed	Number of Times Observed in Samples (mg/l) ND-0.010	0.011-0.100	0.101-1.000	1.000+
40.	4-chlorophenyl phenyl ether	0.010	1	2	2			
41.	4-bromophenyl phenyl ether	0.010	1	2	2			
42.	bis(2-chloroisopropyl)ether	0.010	1	2	2			
43.	bis(2-chloroethoxy)methane	0.010	1	2	2			
44.	methylene chloride	0.010	1	1			1	
45.	methyl chloride (chloromethane)	0.010	1	1	1			
46.	methyl bromide (bromomethane)	0.010	1	1	1			
47.	bromoform (tribromomethane)	0.010	1	1	1			
48.	dichlorobromomethane	0.010	1	1	1			
49.	trichlorofluoromethane	0.010	1	1	1			
50.	dichlorodifluoromethane	0.010	1	1	1			
51.	chlorodibromomethane	0.010	1	1	1			
52.	hexachlorobutadiene	0.010	1	2	2			
53.	hexachlorocyclopentadiene	0.010	1	2	2			
54.	isophorone	0.010	1	2	2			
55.	naphthalene	0.010	1	2	2			
56.	nitrobenzene	0.010	1	2	2			
57.	2-nitrophenol	0.010	1	2	2			
58.	4-nitrophenol	0.010	1	2	2			
59.	2,4-dinitrophenol	0.010	1	2	2			
60.	4,6-dinitro-o-cresol	0.010	1	2	2			
61.	N-nitrosodimethylamine	0.010	1	2	2			
62.	N-nitrosodiphenylamine	0.010	1	2	2			
63.	N-nitrosodi-n-propylamine	0.010	1	2	2			
64.	pentachlorophenol	0.010	1	2	2			
65.	phenol	0.010	1	2	2			
66.	bis (2-ethylhexyl) phthalate	0.010	1	2				2
67.	butyl benzyl phthalate	0.010	1	2	2			
68.	di-n-butyl phthalate	0.010	1	2				2
69.	di-n-octyl phthalate	0.010	1	2	2			
70.	diethyl phthalate	0.010	1	2				2
71.	dimethyl phthalate	0.010	1	2	2			
72.	benzo(a)anthracene	0.010	1	2	2			
73.	benzo(a)pyrene	0.010	1	2	2			
74.	benzo(b)fluoranthene	0.010	1	2	2			
75.	benzo(k)fluoranthene	0.010	1	2	2			
76.	chrysene	0.010	1	2	2			
77.	acenaphthylene	0.010	1	2	2			
78.	anthracene (a)	0.010	1	2				2

Table V-2 (Continued)

FREQUENCY OF OCCURRENCE OF TOXIC POLLUTANTS
ROLLING WITH NEAT OILS SPENT LUBRICANTS
RAW WASTEWATER

	Pollutant	Analytical Quantification Level (mg/l)	Number of Streams Analyzed	Number of Samples Analyzed	Number of Times Observed in Samples (mg/l) ND-0.010	0.011-0.100	0.101-1.000	1.000+
79.	benzo(ghi)perylene	0.010	1	2	2			
80.	fluorene	0.010	1	2	2			
81.	phenanthrene (a)	0.010	-	-				
82.	dibenzo(a,h)anthracene	0.010	1	2	2			
83.	indeno (1,2,3-c,d)pyrene	0.010	1	2	2			
84.	pyrene	0.010	1	2	2			
85.	tetrachloroethylene	0.010	1	1				1
86.	toluene	0.010	1	1			1	
87.	trichloroethylene	0.010	1	1	1			
88.	vinyl chloride (chloroethylene)	0.010	1	1	1			
89.	aldrin	0.005	0	0				
90.	dieldrin	0.005	0	0				
91.	chlordane	0.005	0	0				
92.	4,4'-DDT	0.005	0	0				
93.	4,4'-DDE	0.005	0	0				
94.	4,4'-DDD	0.005	0	0				
95.	alpha-endosulfan	0.005	0	0				
96.	beta-endosulfan	0.005	0	0				
97.	endosulfan sulfate	0.005	0	0				
98.	endrin	0.005	0	0				
99.	endrin aldehyde	0.005	0	0				
100.	heptachlor	0.005	0	0				
101.	heptachlor epoxide	0.005	0	0				
102.	alpha-BHC	0.005	0	0				
103.	beta-BHC	0.005	0	0				
104.	gamma-BHC	0.005	0	0				
105.	delta-BHC	0.005	0	0				
106.	PCB-1242 (b)	0.005	0	0				
107.	PCB-1254 (b)	0.005	-	-				
108.	PCB-1221 (b)	0.005	-	-				
109.	PCB-1232 (b)	0.005	-	-				
110.	PCB-1248 (c)	0.005	0	0				
111.	PCB-1260 (c)	0.005	-	-				
112.	PCB-1016 (c)	0.005	-	-				
113.	toxaphene	0.005	0	0				
114.	antimony	0.100	0	0				
115.	arsenic	0.010	1	2	2			
116.	asbestos	10 MFL	0	0				

Table V-2 (Continued)

FREQUENCY OF OCCURRENCE OF TOXIC POLLUTANTS
ROLLING WITH NEAT OILS SPENT LUBRICANTS
RAW WASTEWATER

Pollutant	Analytical Quantification Level (mg/l)	Number of Streams Analyzed	Number of Samples Analyzed	Number of Times Observed in Samples (mg/l) ND-0.010	0.011-0.100	0.101-1.000	1.000+
117. beryllium	0.010	1	2	2			
118. cadmium	0.002	1	2			2	
119. chromium (total)	0.005	1	2				2
120. copper	0.009	1	2				2
121. cyanide (total)	0.010	1	2	2			
122. lead	0.020	1	2				2
123. mercury	0.0001	1	2	2			
124. nickel	0.005	1	2		1		1
125. selenium	0.01	0	0				
126. silver	0.02	0	0				
127. thallium	0.100	0	0				
128. zinc	0.050	1	2				2
129. 2,3,7,8-tetrachlorodibenzo-p-dioxin	0.005	0	0				

(a), (b), (c) Reported together.

Table V-3

SAMPLING DATA
ROLLING WITH NEAT OILS SPENT LUBRICANTS
RAW WASTEWATER

Pollutant	Stream Code	Sample Type†	Source	Concentrations (mg/l) Day 1	Day 2	Day 3	Average
Toxic Pollutants							
4. benzene	U-6	1	*		0.080		0.080
11. 1,1,1-trichloroethane	U-6	1	*		0.200		0.200
38. ethylbenzene	U-6	1	ND		0.880		0.880
44. methylene chloride	U-6	1	*		0.310		0.310
66. bis(2-ethylhexyl) phthalate	U-6	1	*	350.000	640.000		495.000
68. di-n-butyl phthalate	U-6	1	*	110.000	100.000		105.000
70. diethyl phthalate	U-6	1	*	48.000	100.000		74.000
78. anthracene (a) 81. phenanthrene (a)	U-6	1	ND	150.000	200.000		175.000
85. tetrachloroethylene	U-6	1	ND		1.400		1.400
86. toluene	U-6	1	ND		0.510		0.510
118. cadmium	U-6	1	0.002	0.29	0.44		0.37
119. chromium	U-6	1	<0.001	2.13	20.0		11.1
120. copper	U-6	1	0.013	5.25	22		14
122. lead	U-6	1	0.010	1.09	7.73		4.41
124. nickel	U-6	1	0.016	0.044	1.87		0.96
128. zinc	U-6	1	<0.010	3.2	20		12
Nonconventional							
aluminum	U-6	1	<0.100	732	663		698
calcium	U-6	1	58.7	485	351		418
chemical oxygen demand (COD)	U-6	1		20,930	20,810		20,870
magnesium	U-6	1	7.44	43.9	43.3		43.6
phenols (total; by 4-AAP method)	U-6	1		2.2	2.1		2.2
total organic carbon (TOC)	U-6	1		11,000	13,000		12,000

Table V-3 (Continued)

SAMPLING DATA
ROLLING WITH NEAT OILS SPENT LUBRICANTS
RAW WASTEWATER

Pollutant	Stream Code	Sample Type†	Source	Concentrations (mg/l) Day 1	Day 2	Day 3	Average
Conventional							
oil and grease	U-6	1		78,300	91,400		85,400
suspended solids	U-6	1		58	66		62

(a) Reported together.

†Sample Type
Note: These numbers also apply to subsequent sampling data tables in this section.
1 one-time grab
2 24-hour manual composite
3 24-hour automatic composite
4 48-hour manual composite
5 48-hour automatic composite
6 72-hour manual composite
7 72-hour automatic composite
* Indicates less than or equal to 0.01 mg/l.
** Indicates less than or equal to 0.005 mg/l.

Table V-4

ROLLING WITH EMULSIONS SPENT EMULSION

Plant	Water Use l/kkg	Water Use gal/ton	Percent Recycle	Wastewater l/kkg	Wastewater gal/ton
1	*	*	* (P)	0.3344	0.0802
2	*	*	* (P)	0.3919	0.0940
3	*	*	* (P)	0.5879	0.1410
4	60.46	14.50	99 (B)	0.6046	0.1450
5	*	*	* (P)	0.6404	0.1536
6	*	*	* (P)	0.6671	0.1600
7	*	*	* (P)	1.376	0.3300
8	*	*	* (P)	2.039	0.4890
9	*	*	* (P)	3.919	0.9400
10	*	*	* (P)	4.837	1.160
11	*	*	* (P)	5.045	1.210
12	*	*	* (P)	6.921	1.660
13	*	*	* (P)	7.255	1.740
14	*	*	* (P)	12.63	3.030
15	*	*	* (P)	15.05	3.610
16	*	*	* (P)	23.35	5.600
17	30,600	7,340	100 (P)	28.13	6.746
18	*	*	* (P)	50.87	12.20
19	*	*	* (P)	89.39	21.44
20	54,870	13,160	97 (B)	181.4	43.50
21	*	*	* (P)	197.8	47.43
22	*	*	*	228.6	54.82
23	41,110	9,860	85 (B)	304.4	73.00
24	*	*	*	344.4	82.60
25	76,340	18,310	100 (P)	352.2	84.48
26	*	*	100 (P)	*	*
27	*	*	* (P)	*	*
28	*	*	* (P)	*	*
29	*	*	* (P)	*	*
30	*	*	* (P)	*	*
31	*	*	*	*	*
32	*	*	*	*	*

*Data not available.
P Periodic discharge.
B Bleed discharge.

Statistical Summary

Minimum	60.46	14.50	0.3344	0.0802
Maximum	76,340	18,310	352.2	84.48
Mean	40,600	9,737	74.51	17.87
Median	41,110	9,860	7.255	1.740
Sample:	5 of 29 plants		25 of 29 plants	

Note: Three plants discharge from both hot and cold rolling operations which appear separately in this table.

Table V-5

FREQUENCY OF OCCURRENCE OF TOXIC POLLUTANTS
ROLLING WITH EMULSIONS SPENT EMULSIONS
RAW WASTEWATER

	Pollutant	Analytical Quantification Level (mg/l)	Number of Streams Analyzed	Number of Samples Analyzed	Number of Times Observed in Samples (mg/l) ND-0.010	0.011-0.100	0.101-1.000	1.000+
1.	acenaphthene	0.010	6	9	7	1		1
2.	acrolein	0.010	4	8	6	2		
3.	acrylonitrile	0.010	4	8	8			
4.	benzene	0.010	4	8	7	1		
5.	benzidine	0.010	6	9	9			
6.	carbon tetrachloride	0.010	4	8	8			
7.	chlorobenzene	0.010	4	8	7	1		
8.	1,2,4-trichlorobenzene	0.010	6	9	9			
9.	hexachlorobenzene	0.010	6	9	9			
10.	1,2-dichloroethane	0.010	4	8	8			
11.	1,1,1-trichloroethane	0.010	4	8	8			
12.	hexachloroethane	0.010	6	9	9			
13.	1,1-dichloroethane	0.010	4	8	8			
14.	1,1,2-trichloroethane	0.010	4	8	8			
15.	1,1,2,2-tetrachloroethane	0.010	4	8	8			
16.	chloroethane	0.010	4	8	8			
17.	bis(chloromethyl)ether	0.010	4	8	8			
18.	bis(chloroethyl)ether	0.010	6	9	9			
19.	2-chloroethyl vinyl ether	0.010	4	8	8			
20.	2-chloronaphthalene	0.010	6	9	9			
21.	2,4,6-trichlorophenol	0.010	6	9	8	1		
22.	p-chloro-m-cresol	0.010	6	10	10			
23.	chloroform	0.010	4	8	6	2		
24.	2-chlorophenol	0.010	6	10	10			
25.	1,2-dichlorobenzene	0.010	6	9	9			
26.	1,3-dichlorobenzene	0.010	6	9	9			
27.	1,4-dichlorobenzene	0.010	6	9	9			
28.	3,3'-dichlorobenzidine	0.010	6	9	9			
29.	1,1-dichloroethylene	0.010	4	8	8			
30.	1,2-trans-dichloroethylene	0.010	4	8	7		1	
31.	2,4-dichlorophenol	0.010	6	10	10			
32.	1,2-dichloropropane	0.010	4	8	8			
33.	1,3-dichloropropene	0.010	4	8	8			
34.	2,4-dimethylphenol	0.010	6	10	10			
35.	2,4-dinitrotoluene	0.010	6	9	9			
36.	2,6-dinitrotoluene	0.010	6	9	9			
37.	1,2-diphenylhydrazine	0.010	6	9	9			
38.	ethylbenzene	0.010	4	8	3	5		
39.	fluoranthene	0.010	6	9	6	3		

Table V-5 (Continued)

FREQUENCY OF OCCURRENCE OF TOXIC POLLUTANTS
ROLLING WITH EMULSIONS SPENT EMULSIONS
RAW WASTEWATER

	Pollutant	Analytical Quantification Level (mg/l)	Number of Streams Analyzed	Number of Samples Analyzed	Number of Times Observed in Samples (mg/l) ND-0.010	0.011-0.100	0.101-1.000	1.000+
40.	4-chlorophenyl phenyl ether	0.010	6	9	9			
41.	4-bromophenyl phenyl ether	0.010	6	9	9			
42.	bis(2-chloroisopropyl)ether	0.010	6	9	9			
43.	bis(2-chloroethoxy)methane	0.010	6	9	9			
44.	methylene chloride	0.010	4	8	3		1	4
45.	methyl chloride (chloromethane)	0.010	4	8	8			
46.	methyl bromide (bromomethane)	0.010	4	8	8			
47.	bromoform (tribromomethane)	0.010	4	8	8			
48.	dichlorobromomethane	0.010	4	8	8			
49.	trichlorofluoromethane	0.010	4	8	8			
50.	dichlorodifluoromethane	0.010	4	8	8			
51.	chlorodibromomethane	0.010	4	8	8			
52.	hexachlorobutadiene	0.010	6	9	9			
53.	hexachlorocyclopentadiene	0.010	6	9	9			
54.	isophorone	0.010	6	9	9			
55.	naphthalene	0.010	6	9	7		2	
56.	nitrobenzene	0.010	6	9	9			
57.	2-nitrophenol	0.010	6	10	10			
58.	4-nitrophenol	0.010	6	10	10			
59.	2,4-dinitrophenol	0.010	6	10	10			
60.	4,6-dinitro-o-cresol	0.010	6	10	10			
61.	N-nitrosodimethylamine	0.010	6	9	9			
62.	N-nitrosodiphenylamine	0.010	6	9	6		2	1
63.	N-nitrosodi-n-propylamine	0.010	6	9	9			
64.	pentachlorophenol	0.010	6	10	10			
65.	phenol	0.010	6	10	7		2	1
66.	bis (2-ethylhexyl) phthalate	0.010	6	9	5		2	2
67.	butyl benzyl phthalate	0.010	6	9	8		1	
68.	di-n-butyl phthalate	0.010	6	9	5		2	2
69.	di-n-octyl phthalate	0.010	6	9	9			
70.	diethyl phthalate	0.010	6	9	5		2	2
71.	dimethyl phthalate	0.010	6	9	8			1
72.	benzo(a)anthracene	0.010	6	9	9			
73.	benzo(a)pyrene	0.010	6	9	9			
74.	benzo(b)fluoranthene	0.010	6	9	9			
75.	benzo(k)fluoranthene	0.010	6	9	9			
76.	chrysene	0.010	6	9	8		1	
77.	acenaphthylene	0.010	6	9	8		1	
78.	anthracene (a)	0.010	6	9	7		1	1

Table V-5 (Continued)

FREQUENCY OF OCCURRENCE OF TOXIC POLLUTANTS
ROLLING WITH EMULSIONS SPENT EMULSIONS
RAW WASTEWATER

	Pollutant	Analytical Quantification Level (mg/l)	Number of Streams Analyzed	Number of Samples Analyzed	Number of Times Observed in Samples (mg/l) ND-0.010	0.011-0.100	0.101-1.000	1.000+
79.	benzo(ghi)perylene	0.010	6	9	9			
80.	fluorene	0.010	6	9	4	2	3	
81.	phenanthrene (a)	0.010	-	-				
82.	dibenzo(a,h)anthracene	0.010	6	9	9			
83.	indeno (1,2,3-c,d)pyrene	0.010	6	9	9			
84.	pyrene	0.010	6	9	5	4		
85.	tetrachloroethylene	0.010	4	8	4	1		3
86.	toluene	0.010	4	8	3	3	2	
87.	trichloroethylene	0.010	4	8	7			1
88.	vinyl chloride (chloroethylene)	0.010	4	8	8			
89.	aldrin	0.005	5	7	7			
90.	dieldrin	0.005	5	7	7			
91.	chlordane	0.005	5	7	6	1		
92.	4,4'-DDT	0.005	5	7	7			
93.	4,4'-DDE	0.005	5	7	6	1		
94.	4,4'-DDD	0.005	5	7	7			
95.	alpha-endosulfan	0.005	5	7	7			
96.	beta-endosulfan	0.005	5	7	7			
97.	endosulfan sulfate	0.005	5	7	6	1		
98.	endrin	0.005	5	7	6	1		
99.	endrin aldehyde	0.005	5	7	5	2		
100.	heptachlor	0.005	5	7	7			
101.	heptachlor epoxide	0.005	5	7	7			
102.	alpha-BHC	0.005	5	7	6	1		
103.	beta-BHC	0.005	5	7	6	1		
104.	gamma-BHC	0.005	5	7	7			
105.	delta-BHC	0.005	5	7	7			
106.	PCB-1242 (b)	0.005	-	-				
107.	PCB-1254 (b)	0.005	5	7	4	2		1
108.	PCB-1221 (b)	0.005	-	-				
109.	PCB-1232 (b)	0.005	-	-				
110.	PCB-1248 (c)	0.005	5	7	4	1	1	1
111.	PCB-1260 (c)	0.005	-	-				
112.	PCB-1016 (c)	0.005	-	-				
113.	toxaphene	0.005	5	7	7			
114.	antimony	0.100	6	10	9	1		
115.	arsenic	0.010	6	10	5	4	1	
116.	asbestos	10 MFL	0	0				

Table V-5 (Continued)

FREQUENCY OF OCCURRENCE OF TOXIC POLLUTANTS
ROLLING WITH EMULSIONS SPENT EMULSIONS
RAW WASTEWATER

Pollutant	Analytical Quantification Level (mg/l)	Number of Streams Analyzed	Number of Samples Analyzed	Number of Times Observed in Samples (mg/l) ND-0.010	0.011-0.100	0.101-1.000	1.000+
117. beryllium	0.010	6	10	10			
118. cadmium	0.002	6	10	4	5	1	
119. chromium (total)	0.005	6	10	3	3	4	
120. copper	0.009	6	10	4		2	4
121. cyanide (total)	0.010	6	10	2	5	2	1
122. lead	0.020	6	10	4		1	5
123. mercury	0.0001	6	10	10			
124. nickel	0.005	6	10	3	2	5	
125. selenium	0.01	6	10	10			
126. silver	0.02	6	10	10			
127. thallium	0.100	6	10	10			
128. zinc	0.050	6	10	3			7
129. 2,3,7,8-tetrachlorodibenzo-p-dioxin	0.005	0	0				

(a), (b), (c) Reported together.

Table V-6

SAMPLING DATA
ROLLING WITH EMULSIONS SPENT EMULSIONS
RAW WASTEWATER

Pollutant	Stream Code	Sample Type	Source	Concentrations (mg/l) Day 1	Day 2	Day 3	Average
Toxic Pollutants							
1. acenaphthene	B-6	6	ND	ND			
	E-7	3	*	5.700	ND	ND	5.700
	P-5	1	ND	ND	ND		
	T-1	1		0.095			0.095
	U-4	1	ND	ND			
	U-11	1	ND	ND			
2. acrolein	E-7	1	ND	ND	ND	ND	
	P-5	1	ND	ND	ND	ND	
	U-4	1	ND	0.050			0.050
	U-11	1	ND	0.040			0.040
4. benzene	E-7	1	ND	ND	ND	*	*
	P-5	1	ND	0.020	ND	*	*
	U-4	1	*	*			*
	U-11	1	*	*			*
7. chlorobenzene	E-7	1	ND	ND	0.011	ND	0.011
	P-5	1	ND	ND	ND	ND	
	U-4	1	ND	ND			
	U-11	1	ND	ND			
21. 2,4,6-trichlorophenol	B-6	6	*	ND			
	E-7	3	*	ND	ND	ND	
	P-5	1	ND	ND	ND		
	T-1	1		0.022			0.022
	U-4	1	ND	ND			
	U-11	1	ND	ND			
23. chloroform	E-7	1	*	0.013	0.026	*	0.013
	P-5	1	ND	ND	ND	ND	
	U-4	1	*	ND			
	U-11	1	*	ND			
30. 1,2-trans-di-chloroethylene	E-7	1	ND	ND	0.690	ND	0.690
	P-5	1	ND	ND	ND	ND	
	U-4	1	ND	ND			
	U-11	1	ND	ND			
38. ethylbenzene	E-7	1	ND	ND	0.089	ND	0.089
	P-5	1	ND	0.020	0.030	0.070	0.040
	U-4	1	ND	0.040			0.040
	U-11	1	ND	ND			

Table V-6 (Continued)

SAMPLING DATA
ROLLING WITH EMULSIONS SPENT EMULSIONS
RAW WASTEWATER

Pollutant	Stream Code	Sample Type	Source	Concentrations (mg/l) Day 1	Day 2	Day 3	Average
39. fluoranthene	B-6	6	ND	ND			
	E-7	3	ND	ND	0.066	0.051	0.059
	P-5	1	ND	ND	ND		
	T-1	1		ND			
	U-4	1	ND	ND			
	U-11	1	ND	0.020			0.020
44. methylene chloride	E-7	1	0.017	*	1.100	0.360	0.487
	P-5	1	*	1.200	1.000	1.300	1.167
	U-4	1	*	*			*
	U-11	1	*	*			*
55. naphthalene	B-6	6	ND	ND			
	E-7	3	ND	ND	ND	ND	
	P-5	1	ND	0.750	ND		0.750
	T-1	1		ND			
	U-4	1	ND	0.150			0.150
	U-11	1	ND	*			*
62. N-nitrosodiphenylamine	B-6	6	ND	ND			
	E-7	3	ND	ND	0.780	1.500	1.140
	P-5	1	ND	ND	ND		
	T-1	1		ND			
	U-4	1	ND	ND			
	U-11	1	ND	0.600			0.600
65. phenol	B-6	6	*	ND			
	E-7	3	*	ND	0.270	ND	0.270
	P-5	1	ND	ND	0.180	ND	0.180
	T-1	1		9.900			9.900
	U-4	1	ND	ND			
	U-11	1	ND	ND			
66. bis(2-ethylhexyl) phthalate	B-6	6	*	ND			
	E-7	3	*	2.900	0.320	0.520	1.247
	P-5	1	*	ND	ND		
	T-1	1		1.900			1.900
	U-4	1	*	ND			
	U-11	1	*	ND			
67. butyl benzyl phthalate	B-6	6	*	ND			
	E-7	3	*	ND	ND	ND	
	P-5	1	ND	ND	ND		
	T-1	1		0.190			0.190
	U-4	1	ND	ND			
	U-11	1	ND	ND			

Table V-6 (Continued)

SAMPLING DATA
ROLLING WITH EMULSIONS SPENT EMULSIONS
RAW WASTEWATER

Pollutant	Stream Code	Sample Type	Source	Concentrations (mg/l) Day 1	Day 2	Day 3	Average
68. di-n-butyl phthalate	B-6	6	*	ND			
	E-7	3	*	3.100	0.370	0.330	1.267
	P-5	1	ND	ND	ND		
	T-1	1		19.000			19.000
	U-4	1	*	ND			
	U-11	1	*	ND			
70. diethyl phthalate	B-6	6	*	ND			
	E-7	3	*	1.900	0.340	0.220	0.820
	P-5	1	ND	ND	ND		
	T-1	1		3.100			3.100
	U-4	1	*	ND			
	U-11	1	*	ND			
71. dimethyl phthalate	B-6	6	ND	ND			
	E-7	3	*	1.200	ND	ND	1.200
	P-5	1	ND	ND	ND		
	T-1	1		ND			
	U-4	1	ND	ND			
	U-11	1	ND	ND			
76. chrysene	B-6	6	ND	ND			
	E-7	3	*	ND	ND	ND	
	P-5	1	ND	ND	ND		
	T-1	1		0.360			0.360
	U-4	1	ND	ND			
	U-11	1	ND	*			*
77. acenaphthylene	B-6	6	ND	ND			
	E-7	3	*	ND	1.000	ND	1.000
	P-5	1	ND	ND	ND		
	T-1	1		ND			
	U-4	1	ND	ND			
	U-11	1	ND	ND			
78. anthracene (a)	B-6	6	ND	ND			
81. phenanthrene (a)	E-7	3	ND	ND	1.000	2.000	1.500
	P-5	1	ND	ND	ND		
	T-1	1		<1.100			<1.100
	U-4	1	ND	<0.090			<0.090
	U-11	1	ND	<0.200			<0.200
80. fluorene	B-6	6	ND	ND			
	E-7	3	*	ND	0.220	0.760	0.490
	P-5	1	ND	ND	ND		
	T-1	1		0.450			0.450
	U-4	1	ND	0.070			0.070
	U-11	1	ND	0.040			0.040

Table V-6 (Continued)

SAMPLING DATA
ROLLING WITH EMULSIONS SPENT EMULSIONS
RAW WASTEWATER

Pollutant	Stream Code	Sample Type	Source	Concentrations (mg/l) Day 1	Day 2	Day 3	Average
84. pyrene	B-6	6	ND	ND			
	E-7	3	ND	ND	0.075	0.048	0.062
	P-5	1	ND	ND	ND		
	T-1	1		0.098			0.098
	U-4	1	ND	ND			
	U-11	1	ND	0.020			0.020
85. tetrachloroethylene	E-7	1	ND	ND	0.040	*	0.025
	P-5	1	ND	4.700	1.900	4.200	3.600
	U-4	1	ND	*			*
	U-11	1	ND	*			*
86. toluene	E-7	1	ND	ND	0.089	*	0.045
	P-5	1	ND	0.200	0.040	0.160	0.133
	U-4	1	ND	0.040			0.040
	U-11	1	ND	*			*
87. trichloroethylene	E-7	3	ND	ND	4.800	ND	4.800
	P-5	1	ND	ND	ND	ND	
	U-4	1	ND	ND			
	U-11	1	ND	ND			
91. chlordane	B-6	6	ND	ND			
	E-7	3	**	0.013			0.013
	P-5	1	ND	ND	ND	ND	
	T-1	1		ND			
	U-11	1	ND	ND			
93. 4,4'-DDE	B-6	6	**	0.053			0.053
	E-7	3	**	ND			
	P-5	1	ND	ND	ND	ND	
	T-1	1		ND			
	U-11	1	ND	ND			
95. alpha-endosulfan	B-6	6	ND	0.008			0.008
	E-7	3	ND	ND			
	P-5	1	ND	ND	ND	ND	
	T-1	1		ND			
	U-11	1	ND	ND			
96. beta-endosulfan	B-6	6	ND	0.006			0.006
	E-7	3	ND	ND			
	P-5	1	ND	ND	ND	ND	
	T-1	1		ND			
	U-11	1	ND	ND			

Table V-6 (Continued)

SAMPLING DATA
ROLLING WITH EMULSIONS SPENT EMULSIONS
RAW WASTEWATER

	Pollutant	Stream Code	Sample Type	Source	Concentrations (mg/l) Day 1	Day 2	Day 3	Average
97.	endosulfan sulfate	B-6	6	ND	0.010			0.010
		E-7	3	ND	0.012			0.012
		P-5	1	ND	ND	ND	ND	
		T-1	1		ND			
		U-11	1	ND	ND			
98.	endrin	B-6	6	**	0.010			0.010
		E-7	3	ND	0.066			0.066
		P-5	1	ND	ND	ND	ND	
		T-1	1		ND			
		U-11	1	ND	ND			
99.	endrin aldehyde	B-6	6	ND	ND			
		E-7	3	ND	0.014			0.014
		P-5	1	ND	ND	ND	ND	
		T-1	1		0.058			0.058
		U-11	1	ND	ND			
102.	alpha-BHC	B-6	6	ND	0.013			0.013
		E-7	3	**	ND			
		P-5	1	ND	ND	ND	ND	
		T-1	1		ND			
		U-11	1	ND	ND			
103.	beta-BHC	B-6	6	**	ND			
		E-7	3	**	ND			
		P-5	1	ND	ND	ND	ND	
		T-1	1		0.018			0.018
		U-11	1	ND	ND			
106.	PCB-1242 (b)	B-6	6	**	1.100			1.100
107.	PCB-1254 (b)	E-7	3	**	0.076			0.076
108.	PCB-1221 (b)	P-5	1	ND	ND	ND	ND	
		T-1	1		0.063			0.063
		U-11	1	ND	ND			
109.	PCB-1232 (c)	B-6	6	**	1.800			1.800
110.	PCB-1248 (c)	E-7	3	**	0.160			0.160
111.	PCB-1260 (c)	P-5	1	ND	ND	ND	ND	
112.	PCB-1016 (c)	T-1	1		0.065			0.065
		U-11	1	ND	ND			
114.	antimony	EE-10	1	<0.002		0.023		0.023

Table V-6 (Continued)

SAMPLING DATA
ROLLING WITH EMULSIONS SPENT EMULSIONS
RAW WASTEWATER

Pollutant	Stream Code	Sample Type	Source	Concentrations (mg/l) Day 1	Day 2	Day 3	Average
115. arsenic	B-6	6	<0.01	0.05			0.05
	E-7	3	<0.010	<0.010	<0.010	<0.010	<0.010
	EE-10	1	0.002		0.294		0.294
	P-5	1	0.001	0.016	0.019	0.013	0.016
	U-4	1	<0.002	<0.002			<0.002
	U-11	1	<0.002	<0.002			<0.002
117. beryllium	EE-10	1	<0.010		<0.010		<0.010
118. cadmium	B-6	6		<0.002			<0.002
	E-7	3	<0.002	<0.0002	<0.0002	<0.0002	<0.0002
	EE-10	1	<0.010		0.054		0.054
	P-5	1	<0.0005	0.014	0.016	0.014	0.015
	U-4	1	0.002	0.065			0.065
	U-11	1	0.002	0.180			0.180
119. chromium	B-6	6		1			1
	E-7	3	<0.005	0.001	<0.001	0.001	<0.001
	EE-10	1	0.011		0.495		0.495
	P-5	1	0.002	0.031	0.070	0.023	0.041
	U-4	1	<0.001	0.115			0.115
	U-11	1	<0.001	0.124			0.124
120. copper	B-6	6		1			1
	E-7	3	0.009	0.009	0.003	0.009	0.007
	EE-10	1	<0.010		3.52		3.52
	P-5	1	0.009	1.10	ND	0.780	0.94
	U-4	1	0.013	7.40			7.40
	U-11	1	0.013	4.14			4.14
121. cyanide	B-6	1		0.019			0.019
	D-2	1		0.059			0.059
	E-7	1		0.053	0.016	0.055	0.041
	P-5	1		0.16	2.5	0.17	0.9
	U-4	1		<0.02			<0.02
	U-11	1		<0.02			<0.02
122. lead	B-6	6		0.4			0.4
	E-7	3	<0.020	0.005	<0.002	0.003	<0.003
	EE-10	1	<0.100		<0.100		<0.100
	P-5	1	0.002	2.10	2.40	1.50	2.00
	U-4	1	0.010	12.10			12.10
	U-11	1	0.010	56.90			56.90

Table V-6 (Continued)

SAMPLING DATA
ROLLING WITH EMULSIONS SPENT EMULSIONS
RAW WASTEWATER

Pollutant	Stream Code	Sample Type	Source	Concentrations (mg/L) Day 1	Day 2	Day 3	Average
123. mercury	B-6	6		0.0001			0.0001
	E-7	3	0.0004	<0.020	<0.100	<0.100	<0.073
	EE-10	1	<0.005		<0.005		<0.005
	P-5	1	<0.0001	<0.0001	<0.0001	<0.0001	<0.0001
	U-4	1	0.005	0.004			0.004
	U-11	1	0.005	0.007			0.007
124. nickel	B-6	6		1			1
	E-7	3	<0.005	<0.001	<0.001	<0.001	<0.001
	EE-10	1	0.036		0.280		0.280
	P-5	1	<0.001	0.070	0.140	0.049	0.086
	U-4	1	0.016	0.214			0.214
	U-11	1	0.016	0.130			0.130
125. selenium	EE-10	1	<0.005		<0.005		<0.005
126. silver	EE-10	1	<0.001		0.002		0.002
127. thallium	EE-10	1	<0.001		<0.001		<0.001
128. zinc	B-6	6		5			5
	E-7	3	<0.050	0.008	<0.005	0.008	<0.007
	EE-10	1	0.530		16.0		16.0
	P-5	1	<0.010	1.3	1.7	1.1	1.4
	U-4	1	<0.010	4.200			4.200
	U-11	1	<0.010	2.200			2.200
Nonconventional							
acidity	EE-10	1	<1		NA		
alkalinity	E-7	3	ND	330.0	290.0	220.0	280.0
	EE-10	1	160		NA		
	U-4	1		440			440
	U-11	1		620			620
aluminum	E-7	3	<0.09	350	130	310	260
	EE-10	1	0.065		25.6		25.6
	P-5	1	<0.5	52	41	40	44
	U-4	1	<0.1	210			210
	U-11	1	<0.1	20			20
barium	EE-10	1	0.066		2.35		2.35
boron	EE-10	1	<0.050		<0.050		<0.050

Table V-6 (Continued)

SAMPLING DATA
ROLLING WITH EMULSIONS SPENT EMULSIONS
RAW WASTEWATER

Pollutant	Stream Code	Sample Type	Source	Concentrations (mg/l) Day 1	Day 2	Day 3	Average
Nonconventional							
total organic carbon (TOC)	D-2	6		560,000			560,000
	E-7	3	1	48.6	37.0	30.3	38.0
	EE-10	1	<1		5,200		5,200
	P-5	1	2,000	1,280	2,950	1,140	1,790
	U-4	1		6,800			6,800
	U-11	1		23,000			23,000
vanadium	EE-10	1	<0.020		<0.020		<0.020
yttrium	EE-10	1	<0.020		<0.020		<0.020
chloride	EE-10	1	34		9.4		9.4
fluoride	EE-10	1	0.41		0.67		0.67
ammonia nitrogen	EE-10	1	<0.05		<0.05		<0.05
phosphate	EE-10	1	<4		19		19
total solids (TS)	EE-10	1	250		130,000		130,000
cyanide (total)	EE-10	1	<0.02		<0.02		<0.02
Conventional							
oil and grease	D-2	1		802,000			802,000
	E-7	1		21,300	13,000	18,400	17.6
	EE-10	1	<1		NA		
	P-5	1		12,500	2,300	1,380	5,390
	T-1	1		1,277			1,277
	U-4	1		28,400			28,400
	U-11	1		30,700			30,700
suspended solids	D-2	6		2,700			2,700
	E-7	3	<1	0.540	1.060	0.680	0.760
	EE-10	1	2.3		124,540		124,540
	P-5	1	5	2,200	1,700	3,500	2,500
	U-4	1		3,910			3,910
	U-11	1		890			890
pH (standard units)	EE-10	1	6.97		9.74		
	P-5	1		7.1	6.9		

(a), (b), (c) Reported together.

Table V-7

ROLL GRINDING SPENT LUBRICANT

Plant	Water Use l/kkg	Water Use gal/ton	Percent Recycle	Wastewater l/kkg	Wastewater gal/ton
1	*	*	100	0	0
2	*	*	100	0	0
3	*	*	*	0.15	0.036
4	*	*	P	0.6779	0.1626
5	*	*	*	0.93	0.22
6	*	*	*	7.659	1.837
7	*	*	P	18.00	4.317
8	0.0576	0.0138	P	*	*
9	*	*	*	*	*

*Sufficient data not available to calculate these values.

P Total recycle with periodic discharge.

Statistical Summary

Minimum	0	0
Maximum	18.00	4.317
Mean	3.917	0.939
Median	0.6779	0.1626
Sample:	7 of 9 plants	
Nonzero Mean	5.5	1.3
Sample:	5 of 9 plants	

Table V-8

FREQUENCY OF OCCURRENCE OF TOXIC POLLUTANTS
ROLL GRINDING SPENT EMULSION
RAW WASTEWATER

	Pollutant	Analytical Quantification Level (mg/l)	Number of Streams Analyzed	Number of Samples Analyzed	Number of Times Observed in Samples (mg/l) ND-0.010	0.011-0.100	0.101-1.000	1.000+
1.	acenaphthene	0.010	1	1	1			
2.	acrolein	0.010	1	1		1		
3.	acrylonitrile	0.010	1	1	1			
4.	benzene	0.010	1	1	1			
5.	benzidine	0.010	1	1	1			
6.	carbon tetrachloride	0.010	1	1	1			
7.	chlorobenzene	0.010	1	1	1			
8.	1,2,4-trichlorobenzene	0.010	1	1	1			
9.	hexachlorobenzene	0.010	1	1	1			
10.	1,2-dichloroethane	0.010	1	1	1			
11.	1,1,1-trichloroethane	0.010	1	1	1			
12.	hexachloroethane	0.010	1	1	1			
13.	1,1-dichloroethane	0.010	1	1	1			
14.	1,1,2-trichloroethane	0.010	1	1	1			
15.	1,1,2,2-tetrachloroethane	0.010	1	1	1			
16.	chloroethane	0.010	1	1	1			
17.	bis(chloromethyl)ether	0.010	1	1	1			
18.	bis(chloroethyl)ether	0.010	1	1	1			
19.	2-chloroethyl vinyl ether	0.010	1	1	1			
20.	2-chloronaphthalene	0.010	1	1	1			
21.	2,4,6-trichlorophenol	0.010	1	1	1			
22.	p-chloro-m-cresol	0.010	1	1	1			
23.	chloroform	0.010	1	1	1			
24.	2-chlorophenol	0.010	1	1	1			
25.	1,2-dichlorobenzene	0.010	1	1	1			
26.	1,3-dichlorobenzene	0.010	1	1	1			
27.	1,4-dichlorobenzene	0.010	1	1	1			
28.	3,3'-dichlorobenzidine	0.010	1	1	1			
29.	1,1-dichloroethylene	0.010	1	1	1			
30.	1,2-trans-dichloroethylene	0.010	1	1	1			
31.	2,4-dichlorophenol	0.010	1	1	1			
32.	1,2-dichloropropane	0.010	1	1	1			
33.	1,3-dichloropropene	0.010	1	1	1			
34.	2,4-dimethylphenol	0.010	1	1	1			
35.	2,4-dinitrotoluene	0.010	1	1	1			
36.	2,6-dinitrotoluene	0.010	1	1	1			
37.	1,2-diphenylhydrazine	0.010	1	1	1			
38.	ethylbenzene	0.010	1	1	1			
39.	fluoranthene	0.010	1	1	1			

Table V-8 (Continued)

FREQUENCY OF OCCURRENCE OF TOXIC POLLUTANTS
ROLL GRINDING SPENT EMULSION
RAW WASTEWATER

Pollutant	Analytical Quantification Level (mg/l)	Number of Streams Analyzed	Number of Samples Analyzed	Number of Times Observed in Samples (mg/l) ND-0.010	0.011-0.100	0.101-1.000	1.000+
40. 4-chlorophenyl phenyl ether	0.010	1	1	1			
41. 4-bromophenyl phenyl ether	0.010	1	1	1			
42. bis(2-chloroisopropyl)ether	0.010	1	1	1			
43. bis(2-chloroethoxy)methane	0.010	1	1	1			
44. methylene chloride	0.010	1	1	1			
45. methyl chloride (chloromethane)	0.010	1	1	1			
46. methyl bromide (bromomethane)	0.010	1	1	1			
47. bromoform (tribromomethane)	0.010	1	1	1			
48. dichlorobromomethane	0.010	1	1	1			
49. trichlorofluoromethane	0.010	1	1	1			
50. dichlorodifluoromethane	0.010	1	1	1			
51. chlorodibromomethane	0.010	1	1	1			
52. hexachlorobutadiene	0.010	1	1	1			
53. hexachlorocyclopentadiene	0.010	1	1	1			
54. isophorone	0.010	1	1	1			
55. naphthalene	0.010	1	1	1			
56. nitrobenzene	0.010	1	1	1			
57. 2-nitrophenol	0.010	1	1	1			
58. 4-nitrophenol	0.010	1	1	1			
59. 2,4-dinitrophenol	0.010	1	1	1			
60. 4,6-dinitro-o-cresol	0.010	1	1	1			
61. N-nitrosodimethylamine	0.010	1	1	1			
62. N-nitrosodiphenylamine	0.010	1	1	1			
63. N-nitrosodi-n-propylamine	0.010	1	1	1			
64. pentachlorophenol	0.010	1	1	1			
65. phenol	0.010	1	1	1			
66. bis (2-ethylhexyl) phthalate	0.010	1	1	1			
67. butyl benzyl phthalate	0.010	1	1	1			
68. di-n-butyl phthalate	0.010	1	1	1			
69. di-n-octyl phthalate	0.010	1	1	1			
70. diethyl phthalate	0.010	1	1	1			
71. dimethyl phthalate	0.010	1	1	1			
72. benzo(a)anthracene	0.010	1	1	1			
73. benzo(a)pyrene	0.010	1	1	1			
74. benzo(b)fluoranthene	0.010	1	1	1			
75. benzo(k)fluoranthene	0.010	1	1	1			
76. chrysene	0.010	1	1	1			
77. acenaphthylene	0.010	1	1	1			
78. anthracene (a)	0.010	1	1	1			

Table V-8 (Continued)

FREQUENCY OF OCCURRENCE OF TOXIC POLLUTANTS
ROLL GRINDING SPENT EMULSION
RAW WASTEWATER

	Pollutant	Analytical Quantification Level (mg/l)	Number of Streams Analyzed	Number of Samples Analyzed	Number of Times Observed in Samples (mg/l) ND-0.010	0.011-0.100	0.101-1.000	1.000+
79.	benzo(ghi)perylene	0.010	1	1	1			
80.	fluorene	0.010	1	1	1			
81.	phenanthrene (a)	0.010	-	-				
82.	dibenzo(a,h)anthracene	0.010	1	1	1			
83.	indeno (1,2,3-c,d)pyrene	0.010	1	1	1			
84.	pyrene	0.010	1	1	1			
85.	tetrachloroethylene	0.010	1	1	1			
86.	toluene	0.010	1	1	1			
87.	trichloroethylene	0.010	1	1	1			
88.	vinyl chloride (chloroethylene)	0.010	1	1	1			
89.	aldrin	0.005	1	1	1			
90.	dieldrin	0.005	1	1	1			
91.	chlordane	0.005	1	1	1			
92.	4,4'-DDT	0.005	1	1	1			
93.	4,4'-DDE	0.005	1	1	1			
94.	4,4'-DDD	0.005	1	1	1			
95.	alpha-endosulfan	0.005	1	1	1			
96.	beta-endosulfan	0.005	1	1	1			
97.	endosulfan sulfate	0.005	1	1	1			
98.	endrin	0.005	1	1	1			
99.	endrin aldehyde	0.005	1	1	1			
100.	heptachlor	0.005	1	1	1			
101.	heptachlor epoxide	0.005	1	1	1			
102.	alpha-BHC	0.005	1	1	1			
103.	beta-BHC	0.005	1	1	1			
104.	gamma-BHC	0.005	1	1	1			
105.	delta-BHC	0.005	1	1	1			
106.	PCB-1242 (b)	0.005	1	1	1			
107.	PCB-1254 (b)	0.005	-	-				
108.	PCB-1221 (b)	0.005	-	-				
109.	PCB-1232 (b)	0.005	-	-				
110.	PCB-1248 (c)	0.005	1	1	1			
111.	PCB-1260 (c)	0.005	-	-				
112.	PCB-1016 (c)	0.005	-	-				
113.	toxaphene	0.005	1	1	1			
114.	antimony	0.100	3	3	2	1		
115.	arsenic	0.010	4	4	3	1		
116.	asbestos	10 MFL	0	0				

Table V-8 (Continued)

FREQUENCY OF OCCURRENCE OF TOXIC POLLUTANTS
ROLL GRINDING SPENT EMULSION
RAW WASTEWATER

Pollutant	Analytical Quantification Level (mg/l)	Number of Streams Analyzed	Number of Samples Analyzed	Number of Times Observed in Samples (mg/l) ND-0.010	0.011-0.100	0.101-1.000	1.000+
117. beryllium	0.010	4	4	4			
118. cadmium	0.002	4	4	3	1		
119. chromium (total)	0.005	4	4		2	2	
120. copper	0.009	4	4	3		1	
121. cyanide (total)	0.01	4	4	4			
122. lead	0.020	4	4	3	1		
123. mercury	0.0001	4	4	4			
124. nickel	0.005	4	4	1	3		
125. selenium	0.01	3	3	3			
126. silver	0.02	3	3	3			
127. thallium	0.100	3	3	3			
128. zinc	0.050	4	4	2		2	
129. 2,3,7,8-tetrachlorodibenzo-p-dioxin	0.005	0	0				

(a), (b), (c) Reported together.

Table V-9

SAMPLING DATA
ROLL GRINDING SPENT EMULSION
RAW WASTEWATER

Pollutant	Stream Code	Sample Type	Source	Concentrations (mg/l) Day 1	Day 2	Day 3	Average
Toxic Pollutants							
2. acrolein	U-7	1	ND	0.050			0.050
114. antimony	CC-2	1	<0.010	<0.010			<0.010
	EE-11	1	<0.002			0.026	0.026
	EE-12	1	<0.002			0.002	0.002
115. arsenic	CC-2	1	<0.010	<0.010			<0.010
	EE-11	1	0.021			0.105	0.105
	EE-12	1	0.021			0.006	0.006
117. beryllium	CC-2	1	<0.005	<0.005			<0.005
	EE-11	1	<0.010			<0.010	<0.010
	EE-12	1	<0.001			<0.010	<0.010
118. cadmium	CC-2	1	<0.020	<0.020			<0.020
	EE-11	1	<0.010			0.013	0.013
	EE-12	1	<0.010			<0.010	<0.010
119. chromium	CC-2	1	<0.020	0.360			0.360
	EE-11	1	0.021			0.063	0.063
	EE-12	1	0.021			0.057	0.057
	U-7	1	<0.001	0.850			0.850
120. copper	CC-2	1	<0.050	<0.050			<0.050
	EE-11	1	<0.010			<0.010	<0.010
	EE-12	1	<0.010			<0.010	<0.010
	U-7	1	0.013	0.150			0.150
121. cyanide	CC-2	1	<0.02	<0.02			<0.02
	EE-11	1	<0.02			<0.02	<0.02
	EE-12	1	<0.02			<0.02	<0.02
122. lead	CC-2	1	<0.050	0.050			0.050
	EE-11	1	<0.100			<0.100	<0.100
	EE-12	1	<0.100			<0.100	<0.100
	U-7	1	0.010	0.006			0.006
123. mercury	CC-2	1	0.0004	<0.0002			<0.0002
	EE-11	1	<0.005			<0.005	<0.005
	EE-12	1	<0.005			<0.005	<0.005
	U-7	1	0.005	0.005			0.005

Table V-9 (Continued)

SAMPLING DATA
ROLL GRINDING SPENT EMULSION
RAW WASTEWATER

Pollutant	Stream Code	Sample Type	Source	Concentrations (mg/l) Day 1	Day 2	Day 3	Average
124. nickel	CC-2	1	<0.050	0.050			0.050
	EE-11	1	<0.020			0.033	0.033
	EE-12	1	<0.020			<0.020	<0.020
	U-7	1	0.016	0.044			0.044
125. selenium	CC-2	1	<0.010	<0.010			<0.010
	EE-11	1	<0.005			<0.005	<0.005
	EE-12	1	<0.005			<0.005	<0.005
126. silver	CC-2	1	<0.005	<0.005			<0.005
	EE-11	1	<0.001			<0.001	<0.001
	EE-12	1	<0.001			<0.001	<0.001
127. thallium	CC-2	1	<0.010	<0.040*			<0.040
	EE-11	1	<0.001			<0.001	<0.001
	EE-12	1	<0.001			<0.001	<0.001
128. zinc	CC-2	1	1.10	0.520			0.520
	EE-11	1	0.064			0.224	0.224
	EE-12	1	0.064			<0.020	<0.020
Nonconventional							
aluminum	CC-2	1	1.10	4.30			4.30
	EE-11	1	0.011			2.30	2.30
	EE-12	1	0.011			554.002	554.002
	U-7	1	<0.1	<0.1			<0.1
barium	CC-2	1	<0.050	<0.050			<0.050
	EE-11	1	0.021			0.020	0.020
	EE-12	1	0.021			0.035	0.035
boron	CC-2	1	0.400	242.0			242.0
	EE-11	1	<0.050			6.28	6.28
	EE-12	1	<0.050			<0.050	<0.050
calcium	CC-2	1	36.9	14.3			14.3
	EE-11	1	4.62			4.24	4.24
	EE-12	1	4.62			11.3	11.3
	U-7	1	58.7	69.8			69.8
cobalt	CC-2	1	<0.050	<0.050			<0.050
	EE-11	1	<0.010			<0.010	<0.010
	EE-12	1	<0.010			<0.010	<0.010

Table V-9 (Continued)

SAMPLING DATA
ROLL GRINDING SPENT EMULSION
RAW WASTEWATER

Pollutant	Stream Code	Sample Type	Source	Concentrations (mg/l) Day 1	Day 2	Day 3	Average
iron	CC-2	1	0.050	32.6			32.6
	EE-11	1	0.081			2.88	2.88
	EE-12	1	0.081			3.80	3.80
magnesium	CC-2	1	7.0	5.6			5.6
	EE-11	1	1.68			1.59	1.59
	EE-12	1	1.68			12.4	12.4
	U-7	1	7.44	10.5			10.5
manganese	CC-2	1	<0.050	0.100			0.100
	EE-11	1	0.016			0.143	0.143
	EE-12	1	0.016			0.053	0.053
molybdenum	CC-2	1	<0.050	0.100			0.100
	EE-11	1	0.030			0.036	0.036
	EE-12	1	0.030			0.060	0.060
sodium	CC-2	1	6.80	29.3			29.3
tin	CC-2	1	<0.050	<0.050			<0.050
	EE-11	1	<0.020			<0.020	<0.020
	EE-12	1	<0.020			<0.020	<0.020
titanium	CC-2	1	<0.050	<0.050			<0.050
	EE-11	1	<0.010			0.017	0.017
	EE-12	1	<0.010			0.017	0.017
vanadium	CC-2	1	<0.050	<0.050			<0.050
	EE-11	1	<0.020			<0.020	<0.020
	EE-12	1	<0.020			<0.020	<0.020
yttrium	CC-2	1	<0.050	<0.050			<0.050
	EE-11	1	<0.020			<0.020	<0.020
	EE-12	1	<0.020			<0.020	<0.020
acidity	CC-2	1	<1	<1			<1
	EE-11	1	<1			<1	<1
	EE-12	1	<1			<1	<1
alkalinity	CC-2	1	49	2,600			2,600
	EE-11	1	22			650	650
	EE-12	1	22			480	480
	U-7	1		180			180

Table V-9 (Continued)

SAMPLING DATA
ROLL GRINDING SPENT EMULSION
RAW WASTEWATER

Pollutant	Stream Code	Sample Type	Source	Concentrations (mg/l) Day 1	Day 2	Day 3	Average
chloride	CC-2	1	24	31			31
	EE-11	1	<0.05			<0.05	<0.05
	EE-12	1	<0.05			34	34
chemical oxygen demand (COD)	EE-11	1	48			310	310
	EE-12	1	48			850	850
	U-7	1		230			230
fluoride	CC-2	1	0.73	0.69			0.69
	EE-11	1	0.67			0.28	0.28
	EE-12	1	0.67			0.20	0.20
ammonia nitrogen	EE-11	1	<0.05			<0.05	<0.05
	EE-12	1	<0.05			2.5	2.5
sulfate	CC-2	1	75	120			120
	EE-11	1	21			350	350
	EE-12	1	21			39	39
	U-7	1		59			59
phenol (total, by 4-AAP method)	U-7	1		0.007			0.007
total organic carbon (TOC)	EE-11	1	<1			17	17
	EE-12	1	<1			165	165
	U-7	1		2.5			2.5
total dissolved solids (TDS)	CC-2	1	300	2,200			2,200
	EE-11	1	28			1,140	1,140
	EE-12	1	28			340	340
phosphate	EE-11	1	818			19	19
	EE-12	1	818			13	13
total solids	CC-2	1	204	3,920			3,920
	EE-11	1	30			1,300	1,300
	EE-12	1	30			440	440
Conventional							
oil and grease	CC-2	1	<1	780			780
	EE-11	1	3			310	310
	EE-12	1	3			11	11
	U-7	1		107			107

Table V-9 (Continued)

SAMPLING DATA
ROLL GRINDING SPENT EMULSION
RAW WASTEWATER

Pollutant	Stream Code	Sample Type	Source	Concentrations (mg/l) Day 1	Day 2	Day 3	Average
suspended solids	CC-2	1	<1	17			17
	EE-11	1	3			120	120
	EE-12	1	3			9.0	9.0
	U-7	1		118			118
pH (standard units)	CC-2	1	5.35	9.07			
	EE-11	1	6.05			9.51	
	EE-12	1	6.05			8.72	
	U-7	1	8.0	6.0			

Table V-10

EXTRUSION DIE CLEANING BATH

Plant	Water Use l/kkg	Water Use gal/ton	Percent Recycle	Wastewater l/kkg	Wastewater gal/ton
1	*	*	**	0	0
2	51.87	12.44	**	0	0
3	*	*	**	0	0
4	0.2506	0.0601	**	0.2506	0.0601
5	*	*	**	0.69	0.17
6	2.472	0.5929	**	2.060	0.4941
7	*	*	**	2.66	0.64
8	2.811	0.6742	**	2.811	0.6742
9	4.009	0.9615	**	3.341	0.8013
10	5.833	1.399	**	5.833	1.399
11	12.52	3.003	**	12.52	3.003
12	13.90	3.333	**	13.90	3.333
13	13.99	3.356	**	13.99	3.356
14	*	*	**	16.6	4.0
15	39.68	9.517	**	39.68	9.517
16	53.45	12.82	**	53.45	12.82
17	9.957	2.388	**	*	*

*Data not available.
**Not applicable.

Statistical Summary

Minimum	0.2506	0.0601	0	0
Maximum	53.45	12.82	53.45	12.82
Mean	17.56	4.212	10.49	2.52
Median	11.24	2.696	3.076	0.738
Sample:	12 of 37 plants		16 of 37 plants	
Nonzero Mean	17.56	4.212	12.9	3.1
Sample:	12 of 37 plants		13 of 37 plants	
Nonzero Mean (Proposal)	17.56	4.212	14.79	3.546
Sample:	12 of 37 plants		10 of 37 plants	

Note: Table does not include 23 plants which provided insufficient information to calculate water use and wastewater values.

Table V-11

EXTRUSION DIE CLEANING RINSE

Plant	Water Use l/kkg	Water Use gal/ton	Percent Recycle	Wastewater l/kkg	Wastewater gal/ton
1	*	*	100	0	0
2	0.7025	0.1685	0	0.7025	0.1685
3	4.009	0.9615	*	3.341	0.8013
4	5.833	1.399	0	5.833	1.399
5	8.285	1.987	0	8.285	1.987
6	9.957	2.388	0	9.957	2.388
7	11.78	2.826	0	11.78	2.826
8	*	*	*	18.65	4.473
9	53.45	12.82	0	53.45	12.82
10	155.6	37.33	*	118.6	28.44

*Data not available.

Statistical Summary

Minimum	0.7025	0.1685	0	0
Maximum	155.6	37.33	118.6	28.44
Mean	31.21	7.485	23.06	5.530
Median	9.121	2.188	9.121	2.188
Sample:	8 of 30 plants		10 of 30 plants	
Nonzero Mean	31.21	7.485	25.62	6.145
Sample:	8 of 30 plants		9 of 30 plants	

Note: Table does not include 20 plants which provided insufficient information to calculate water use and wastewater values.

Table V-12

FREQUENCY OF OCCURRENCE OF TOXIC POLLUTANTS
EXTRUSION DIE CLEANING BATH
RAW WASTEWATER

Pollutant	Analytical Quantification Level (mg/l)	Number of Streams Analyzed	Number of Samples Analyzed	Number of Times Observed in Samples (mg/l) ND-0.010	0.011-0.100	0.101-1.000	1.000+
114. antimony	0.100	3	3	2	1		
115. arsenic	0.010	3	3		0	0	3
116. asbestos	10 MFL	0	0				
117. beryllium	0.010	3	3	3		0	
118. cadmium	0.002	3	3	3			0
119. chromium (total)	0.005	3	3		1		2
120. copper	0.009	3	3				3
121. cyanide (total)	0.01	3	3	3	0		
122. lead	0.020	3	3	1			2
123. mercury	0.0001	3	3	3			
124. nickel	0.005	3	3	3			
125. selenium	0.01	3	3	2	1	0	
126. silver	0.02	3	3	3	0		
127. thallium	0.100	3	3	3	0		
128. zinc	0.050	3	3				3
129. 2,3,7,8-tetrachlorodibenzo-p-dioxin	0.005	0	0				

(a), (b), (c) Reported together.

Table V-13

SAMPLING DATA
EXTRUSION DIE CLEANING BATH
RAW WASTEWATER

Pollutant	Stream Code	Sample Type	Source	Concentrations (mg/l) Day 1	Day 2	Day 3	Average
Toxic Pollutants							
114. antimony	AA-1	1	<0.010	0.100			0.100
	BB-3	1	<0.025		<1.000*		<0.1000
	DD-3	1	<0.002			0.002	0.002
115. arsenic	AA-1	1	<0.010	8.0			8.0
	BB-3	1	<0.010		2.000		2.000
	DD-3	1	<0.001			11	11
117. beryllium	AA-1	1	<0.005	<0.500			<0.500
	BB-3	1	<0.015		<0.500		<0.500
	DD-3	1	<0.010			<0.010	<0.010
118. cadmium	AA-1	1	<0.020	<2.000			<2.000
	BB-3	1	<0.060		<2.000		<2.000
	DD-3	1	<0.010			<0.010	<0.010
119. chromium	AA-1	1	<0.020	8.0			8.0
	BB-3	1	<0.060		6.000		6.000
	DD-3	1	<0.020			0.090	0.090
120. copper	AA-1	1	<0.050	75.0			75.0
	BB-3	1	<0.150		15.00		15.00
	DD-3	1	0.013			1.62	1.62
121. cyanide (total)	AA-1	1	<0.02	<0.02			<0.02
	BB-3	1	<0.02		<0.02		<0.02
	DD-3	1	<0.02			<0.02	<0.02
122. lead	AA-1	1	<0.050	10.0			10.0
	BB-3	1	<0.150		<5.000		<5.000
	DD-3	1	<0.100			1.02	1.02
123. mercury	AA-1	1	<0.0002	<0.002			<0.002
	BB-3	1	<0.0002		<0.002		<0.002
	DD-3	1	<0.005			<0.005	<0.005
124. nickel	AA-1	1	<0.050	<5.0			<5.0
	BB-3	1	<0.150		<5.000		<5.000
	DD-3	1	<0.050			<0.020	<0.020

Table V-13 (Continued)

SAMPLING DATA
EXTRUSION DIE CLEANING BATH
RAW WASTEWATER

Pollutant	Stream Code	Sample Type	Source	Concentrations (mg/l) Day 1	Day 2	Day 3	Average
125. selenium	AA-1	1	<0.010	chemical interference			
	BB-3	1	<0.010		<1.000*		<1.000
	DD-3	1	<0.005			0.027	0.027
126. silver	AA-1	1	<0.010	<0.100			<0.100
	BB-3	1	<0.010		<0.100		<0.100
	DD-3	1	<0.001			0.002	0.002
127. thallium	AA-1	1	<0.010	<0.100			<0.100
	BB-3	1	<0.001		<0.100		<0.100
	DD-3	1	<0.001			0.004	0.004
128. zinc	AA-1	1	<0.020	138.0			138.0
	BB-3	1	<0.060		8.000		8.000
	DD-3	1	<0.010			5.88	5.88
Nonconventional							
aluminum	AA-1	1	<0.100	15,800			15,800
	BB-3	1	0.500		43,700		43,700
	DD-3	1	<0.050			35,200	35,200
barium	AA-1	1	0.250	<5.0			<5.0
	BB-3	1	<0.150		<5.000*		<5.000
	DD-3	1	0.179			<0.02	<0.02
boron	AA-1	1	<0.100	20.0			20.0
	BB-3	1	0.800		<10.000*		<10.000
	DD-3	1	<0.100			1.40	1.40
calcium	AA-1	1	117	<10.0			<10.0
	BB-3	1	4.800		20,000		20,000
	DD-3	1	5.68			0.158	0.158
cobalt	AA-1	1	<0.050	<5.0			<5.0
	BB-3	1	<0.150		<5.000*		<5.000
	DD-3	1	<0.010			0.079	0.079
iron	AA-1	1	2.85	145			145
	BB-3	1	<0.150		80.000		80.000
	DD-3	1	0.054			1.57	1.57

Table V-13 (Continued)

SAMPLING DATA
EXTRUSION DIE CLEANING BATH
RAW WASTEWATER

Pollutant	Stream Code	Sample Type	Source	Concentrations (mg/l) Day 1	Day 2	Day 3	Average
magnesium	AA-1	1	33.9	10.0			10.0
	BB-3	1	0.500		140.000		140.000
	DD-3	1	108			0.140	0.140
manganese	AA-1	1	<5.0	35.0			35.0
	BB-3	1	<0.100		<5.000		<5.000
	DD-3	1	<0.010			0.045	0.045
molybdenum	AA-1	1	<0.050	<5.0			<5.0
	BB-3	1	<0.150		<5.000*		<5.000
	DD-3	1	<0.020			0.125	0.125
sodium	AA-1	1	4.8	159,000			159,000
	BB-3	1	76.7		167,000		167,000
tin	AA-1	1	<0.050	<5.0			<5.0
	BB-3	1	<0.150		<5.000*		<5.000
	DD-3	1	<0.020			1.45	1.45
titanium	AA-1	1	<0.050	<5.0			<5.0
	BB-3	1	<0.150		<5.000*		<5.000
	DD-3	1	<0.010			<0.010	<0.010
vanadium	AA-1	1	<0.050	<5.0			<5.0
	BB-3	1	<0.150		<5.000*		<5.000
	DD-3	1	0.026			0.692	0.692
yttrium	AA-1	1	<0.050	<5.0			<5.0
	BB-3	1	<0.150		<5.000*		<5.000
	DD-3	1	<0.020			<0.02	<0.02
acidity	AA-1	1	<1	<1			<1
	BB-3	1	<1		<1		<1
	DD-3	1	<1			<1	<1
alkalinity	AA-1	1	270	740,000			740,000
	BB-3	1	160		400,000		400,000
	DD-3	1	274			280,000	280,000
chloride	AA-1	1	24	7,200			7,200
	BB-3	1	17		3,960		3,960
	DD-3	1	61			3,000	3,000

Table V-13 (Continued)

SAMPLING DATA
EXTRUSION DIE CLEANING BATH
RAW WASTEWATER

Pollutant	Stream Code	Sample Type	Source	Concentrations (mg/l) Day 1	Day 2	Day 3	Average
chemical oxygen demand (COD)	AA-1	1	23	1,550			1,550
	BB-3	1	9		1,550		1,550
	DD-3	1	<0.5			2,600	2,600
fluoride	AA-1	1	0.17	2.2			2.2
	BB-3	1	<0.05		1.1		1.1
	DD-3	1	0.29			3.5	3.5
ammonia nitrogen	AA-1	1	0.10	<0.05			<0.05
	BB-3	1	0.05		2.4		2.4
	DD-3	1	<0.01			0.49	0.49
phenols (total; by 4-AAP method)	AA-1	1	<0.005	<0.005			<0.005
	BB-3	1	0.026		0.030		0.030
sulfate	AA-1	1	115	150			150
	BB-3	1	90		120		120
	DD-3	1	180			240	240
dissolved solids	AA-1	1	530	600,000			600,000
	BB-3	1	310		2,360		2,360
	DD-3	1	670			250,000	250,000
total organic carbon (TOC)	AA-1	1	<1	260			260
	BB-3	1	<1		10		10
	DD-3	1	<1			29	29
phosphate	AA-1	1	<3	<3			<3
	BB-3	1	21		<3		<3
	DD-3	1	20			400	400
total solids (TS)	AA-1	1	590	700,000			700,000
	BB-3	1	267		40,000		40,000
	DD-3	1	380			550,000	550,000
Conventional							
suspended solids	AA-1	1	17	2,970			2,970
	BB-3	1	8		3,830		3,830
	DD-3	1	1			310	310

Table V-13 (Continued)

SAMPLING DATA
EXTRUSION DIE CLEANING BATH
RAW WASTEWATER

Pollutant	Stream Code	Sample Type	Source	Concentrations (mg/l) Day 1	Day 2	Day 3	Average
pH (standard units)	AA-1	1	7.44	12.03			
	BB-3	1	7.68		12.92		
	DD-3	1	7.03			12.86	
oil and grease	AA-1	1	<0.5	<1			<1
	BB-3	1	<1		<1		<1
	DD-3	1	<1			22	22

*Detection limit raised due to interference.

Table V-14

FREQUENCY OF OCCURRENCE OF TOXIC POLLUTANTS
EXTRUSION DIE CLEANING RINSE
RAW WASTEWATER

	Pollutant	Analytical Quantification Level (mg/l)	Number of Streams Analyzed	Number of Samples Analyzed	Number of Times Observed in Samples (mg/l) ND-0.010	0.011-0.100	0.101-1.000	1.000+
1.	acenaphthene	0.010	2	2	2			
2.	acrolein	0.010	2	2	2			
3.	acrylonitrile	0.010	2	2	2			
4.	benzene	0.010	2	2	2			
5.	benzidine	0.010	2	2	2			
6.	carbon tetrachloride	0.010	2	2	2			
7.	chlorobenzene	0.010	2	2	2			
8.	1,2,4-trichlorobenzene	0.010	2	2	2			
9.	hexachlorobenzene	0.010	2	2	2			
10.	1,2-dichloroethane	0.010	2	2	2			
11.	1,1,1-trichloroethane	0.010	2	2	2			
12.	hexachloroethane	0.010	2	2	2			
13.	1,1-dichloroethane	0.010	2	2	2			
14.	1,1,2-trichloroethane	0.010	2	2	2			
15.	1,1,2,2-tetrachloroethane	0.010	2	2	2			
16.	chloroethane	0.010	2	2	2			
17.	bis(chloromethyl)ether	0.010	2	2	2			
18.	bis(chloroethyl)ether	0.010	2	2	2			
19.	2-chloroethyl vinyl ether	0.010	2	2	2			
20.	2-chloronaphthalene	0.010	2	2	2			
21.	2,4,6-trichlorophenol	0.010	2	2	2			
22.	p-chloro-m-cresol	0.010	2	2	2			
23.	chloroform	0.010	2	2	2			
24.	2-chlorophenol	0.010	2	2	2			
25.	1,2-dichlorobenzene	0.010	2	2	2			
26.	1,3-dichlorobenzene	0.010	2	2	2			
27.	1,4-dichlorobenzene	0.010	2	2	2			
28.	3,3'-dichlorobenzidine	0.010	2	2	2			
29.	1,1-dichloroethylene	0.010	2	2	2			
30.	1,2-trans-dichloroethylene	0.010	2	2	2			
31.	2,4-dichlorophenol	0.010	2	2	2			
32.	1,2-dichloropropane	0.010	2	2	2			
33.	1,3-dichloropropylene	0.010	2	2	2			
34.	2,4-dimethylphenol	0.010	2	2	2			
35.	2,4-dinitrotoluene	0.010	2	2	2			
36.	2,6-dinitrotoluene	0.010	2	2	2			
37.	1,2-diphenylhydrazine	0.010	2	2	2			
38.	ethylbenzene	0.010	2	2	2			
39.	fluoranthene	0.010	2	2	2			

Table V-14 (Continued)

FREQUENCY OF OCCURRENCE OF TOXIC POLLUTANTS
EXTRUSION DIE CLEANING RINSE
RAW WASTEWATER

	Pollutant	Analytical Quantification Level (mg/l)	Number of Streams Analyzed	Number of Samples Analyzed	Number of Times Observed in Samples (mg/l) ND-0.010	0.011-0.100	0.101-1.000	1.000+
40.	4-chlorophenyl phenyl ether	0.010	2	2	2			
41.	4-bromophenyl phenyl ether	0.010	2	2	2			
42.	bis(2-chloroisopropyl)ether	0.010	2	2	2			
43.	bis(2-chloroethoxy)methane	0.010	2	2	2			
44.	methylene chloride	0.010	2	2		2		
45.	methyl chloride (chloromethane)	0.010	2	2	2			
46.	methyl bromide (bromomethane)	0.010	2	2	2			
47.	bromoform (tribromomethane)	0.010	2	2	2			
48.	dichlorobromomethane	0.010	2	2	2			
49.	trichlorofluoromethane	0.010	2	2	2			
50.	dichlorodifluoromethane	0.010	2	2	2			
51.	chlorodibromomethane	0.010	2	2	2			
52.	hexachlorobutadiene	0.010	2	2	2			
53.	hexachlorocyclopentadiene	0.010	2	2	2			
54.	isophorone	0.010	2	2	2			
55.	naphthalene	0.010	2	2	2			
56.	nitrobenzene	0.010	2	2	2			
57.	2-nitrophenol	0.010	2	2	2			
58.	4-nitrophenol	0.010	2	2	2			
59.	2,4-dinitrophenol	0.010	2	2	2			
60.	4,6-dinitro-o-cresol	0.010	2	2	2			
61.	N-nitrosodimethylamine	0.010	2	2	2			
62.	N-nitrosodiphenylamine	0.010	2	2	2			
63.	N-nitrosodi-n-propylamine	0.010	2	2	2			
64.	pentachlorophenol	0.010	2	2	2			
65.	phenol	0.010	2	2	2			
66.	bis (2-ethylhexyl) phthalate	0.010	2	2	1	1		
67.	butyl benzyl phthalate	0.010	2	2	2			
68.	di-n-butyl phthalate	0.010	2	2	2			
69.	di-n-octyl phthalate	0.010	2	2	2			
70.	diethyl phthalate	0.010	2	2	2			
71.	dimethyl phthalate	0.010	2	2	2			
72.	benzo(a)anthracene	0.010	2	2	2			
73.	benzo(a)pyrene	0.010	2	2	2			
74.	benzo(b)fluoranthene	0.010	2	2	2			
75.	benzo(k)fluoranthene	0.010	2	2	2			
76.	chrysene	0.010	2	2	2			
77.	acenaphthylene	0.010	2	2	2			
78.	anthracene (a)	0.010	2	2	2			

Table V-14 (Continued)

FREQUENCY OF OCCURRENCE OF TOXIC POLLUTANTS
EXTRUSION DIE CLEANING RINSE
RAW WASTEWATER

	Pollutant	Analytical Quantification Level (mg/l)	Number of Streams Analyzed	Number of Samples Analyzed	Number of Times Observed in Samples (mg/l) ND-0.010	0.011-0.100	0.101-1.000	1.000+
79.	benzo(ghi)perylene	0.010	2	2	2			
80.	fluorene	0.010	2	2	2			
81.	phenanthrene (a)	0.010	-	-				
82.	dibenzo(a,h)anthracene	0.010	2	2	2			
83.	indeno (1,2,3-c,d)pyrene	0.010	2	2	2			
84.	pyrene	0.010	2	2	2			
85.	tetrachloroethylene	0.010	2	2	2			
86.	toluene	0.010	2	2	2			
87.	trichloroethylene	0.010	2	2	2			
88.	vinyl chloride (chloroethylene)	0.010	2	2	2			
89.	aldrin	0.005	2	2	2			
90.	dieldrin	0.005	2	2	2			
91.	chlordane	0.005	2	2	2			
92.	4,4'-DDT	0.005	2	2	2			
93.	4,4'-DDE	0.005	2	2	2			
94.	4,4'-DDD	0.005	2	2	2			
95.	alpha-endosulfan	0.005	2	2	2			
96.	beta-endosulfan	0.005	2	2	2			
97.	endosulfan sulfate	0.005	2	2	2			
98.	endrin	0.005	2	2	2			
99.	endrin aldehyde	0.005	2	2	2			
100.	heptachlor	0.005	2	2	2			
101.	heptachlor epoxide	0.005	2	2	2			
102.	alpha-BHC	0.005	2	2	2			
103.	beta-BHC	0.005	2	2	2			
104.	gamma-BHC	0.005	2	2	2			
105.	delta-BHC	0.005	2	2	2			
106.	PCB-1242 (b)	0.005	2	2	2			
107.	PCB-1254 (b)	0.005	-	-				
108.	PCB-1221 (b)	0.005	-	-				
109.	PCB-1232 (b)	0.005	-	-				
110.	PCB-1248 (c)	0.005	2	2	2			
111.	PCB-1260 (c)	0.005	-	-				
112.	PCB-1016 (c)	0.005	-	-				
113.	toxaphene	0.005	2	2	2			
114.	antimony	0.100	3	5	2	3		
115.	arsenic	0.010	3	5	4	1		
116.	asbestos	10 MFL	0	0				

Table V-14 (Continued)

FREQUENCY OF OCCURRENCE OF TOXIC POLLUTANTS
EXTRUSION DIE CLEANING RINSE
RAW WASTEWATER

Pollutant	Analytical Quantification Level (mg/l)	Number of Streams Analyzed	Number of Samples Analyzed	Number of Times Observed in Samples (mg/l) ND-0.010	0.011-0.100	0.101-1.000	1.000+
117. beryllium	0.010	3	5	5			
118. cadmium	0.002	3	5	3	2		
119. chromium (total)	0.005	3	5	0	4	1	
120. copper	0.009	3	5			4	1
121. cyanide (total)	0.010	3	5	2	3		
122. lead	0.020	3	5			5	
123. mercury	0.0001	3	5	5			
124. nickel	0.005	3	5	3	2		
125. selenium	0.01	3	5	4	1		
126. silver	0.02	3	5	4	1		
127. thallium	0.100	3	5	4	1		
128. zinc	0.050	3	5		2	2	1
129. 2,3,7,8-tetrachlorodibenzo-p-dioxin	0.005	0	0				

(a), (b), (c) Reported together.

Table V-15

SAMPLING DATA
EXTRUSION DIE CLEANING RINSE
RAW WASTEWATER

Pollutant	Stream Code	Sample Type	Source	Concentrations (mg/l) Day 1	Day 2	Day 3	Average
Toxic Pollutants							
4. benzene	F-7	1	ND	ND			
	V-2	1	*	*			*
11. 1,1,1-trichloroethane	F-7	1	ND	ND			
	V-2	1	ND	*			*
44. methylene chloride	F-7	1	0.024	0.036			0.036
	V-2	1	0.015	0.021			0.021
66. bis(2-ethylhexyl) phthalate	F-7	1	0.025	0.027			0.027
	V-2	1	*	*			*
86. toluene	F-7	1	*	ND			
	V-2	1	*	*			*
114. antimony	F-7	1	<0.1	<0.1			<0.1
	V-2	1	<0.001	0.013			0.013
	W-6	2	0.003	0.035	<0.001	0.015	<0.017
115. arsenic	F-7	1	<0.01	<0.01			<0.01
	V-2	1	<0.005	0.042			0.042
	W-6	2	<0.005	0.004	0.009	<0.005	<0.006
118. cadmium	F-7	1	<0.002	0.020			0.020
	V-2	1	<0.001	0.020			0.020
	W-6	2	<0.001	0.001	<0.001	<0.001	<0.001
119. chromium	F-7	1	<0.005	0.090			0.090
	V-2	1	<0.001	0.210			0.210
	W-6	2	0.004	0.037	0.030	0.045	0.037
120. copper	F-7	1	<0.009	0.200			0.200
	V-2	1	0.027	0.320			0.320
	W-6	2	0.010	2.4	0.930	0.300	1.2
121. cyanide	F-7	1		0.002			0.002
	V-2	1	0.0042	0.0042			0.0042
	W-6	1	0.030	0.015	0.015	0.015	0.015
122. lead	F-7	1	<0.020	0.600			0.600
	V-2	1	0.079	0.270			0.270
	W-6	2	0.009	0.830	0.130	0.550	0.503

Table V-15 (Continued)

SAMPLING DATA
EXTRUSION DIE CLEANING RINSE
RAW WASTEWATER

Pollutant	Stream Code	Sample Type	Source	Concentrations (mg/l) Day 1	Day 2	Day 3	Average
123. mercury	F-7	1	0.0006	0.0007			0.0007
	V-2	1	<0.0002	<0.0002			<0.0002
	W-6	2	<0.002	<0.002	<0.002	<0.002	<0.002
124. nickel	F-7	1	<0.005	<0.005			<0.005
	V-2	1	0.009	0.10			0.10
	W-6	2	0.060	0.010	0.021	<0.009	<0.013
125. selenium	F-7	1	<0.01	<0.01			<0.01
	V-2	1	0.020	<0.005			<0.005
	W-6	2	0.015	0.100	<0.005	<0.005	<0.037
126. silver	F-7	1	<0.02	<0.02			<0.02
	V-2	1	0.05	<0.001			<0.001
	W-6	2	0.02	0.02	<0.001	<0.001	<0.01
127. thallium	F-7	1	<0.1	<0.1			<0.1
	V-2	1	<0.001	<0.001			<0.001
	W-6	2	<0.001	0.002	<0.001	0.057	<0.026
128. zinc	F-7	1	<0.050	0.100			0.100
	V-2	1	0.500	0.100			0.100
	W-6	2	0.030	1.500	0.300	0.26	0.69
Nonconventional							
alkalinity	F-7	1		ND			
	V-2	1		5,400			5,400
	W-6	2	170	3,200	1,700	3,100	2,700
aluminum	F-7	1		430			430
	V-2	1	0.09	48			48
	W-6	2	0.06	4.8	23	0.42	9
calcium	F-7	1		<0.03			<0.03
	V-2	1	9.8	6.9			6.9
	W-6	2	55	55	20	3.7	26
chemical oxygen demand (COD)	F-7	1		12			12
	V-2	1	<1	28			28
	W-6	1	12	20	60	12	31

Table V-15 (Continued)

SAMPLING DATA
EXTRUSION DIE CLEANING RINSE
RAW WASTEWATER

Pollutant	Stream Code	Sample Type	Source	Concentrations (mg/l) Day 1	Day 2	Day 3	Average
dissolved solids	F-7	1		3,237			3,237
	V-2	1		7,200			7,200
	W-6	2	3	3,700	2,200	3,800	3,200
magnesium	F-7	1		0.03			0.03
	V-2	1	63	2.7			2.7
	W-6	2	19	12	11	1.6	8
phenols (total; by 4-AAP method)	F-7	1		0.005			0.005
	V-2	1	0.062	0.019			0.019
	W-6	1	1.0	0.012	0.088	0.060	0.053
sulfate	F-7	1		60			60
	V-2	1		290			290
	W-6	2	81	110	170	180	150
total organic carbon (TOC)	F-7	1		19			19
	V-2	1	4.7	120			120
	W-6	1	0	7	20	11	13
Conventional							
oil and grease	F-7	1		8			8
	V-2	1	16	17			17
	W-6	1	6.6	6.8	<1	<1	<3
suspended solids	F-7	1		28			28
	V-2	1		120			120
	W-6	2	<1	26	130	44	67
pH (standard units)	F-7	1	7.55	10.85			
	V-2	1	7.3	10.3			
	W-6	1	7.7	11.5	11.7	7.8	

Table V-16

EXTRUSION DIE CLEANING SCRUBBER LIQUOR

Plant	Water Use l/kkg	Water Use gal/ton	Percent Recycle	Wastewater l/kkg	Wastewater gal/ton
1	258.8	62.08	0	258.8	62.08
2	292.2	70.08	0	292.2	70.08
Statistical Summary					
Mean	275.5	66.08		275.5	66.08
Sample:	2 of 2 plants			2 of 2 plants	

Table V-17

FREQUENCY OF OCCURRENCE OF TOXIC POLLUTANTS
EXTRUSION DIE CLEANING SCRUBBER LIQUOR
RAW WASTEWATER

	Pollutant	Analytical Quantification Level (mg/l)	Number of Streams Analyzed	Number of Samples Analyzed	Number of Times Observed in Samples (mg/l) ND-0.010	0.011-0.100	0.101-1.000	1.000+
1.	acenaphthene	0.010	0	0				
2.	acrolein	0.010	0	0				
3.	acrylonitrile	0.010	0	0				
4.	benzene	0.010	0	0				
5.	benzidine	0.010	0	0				
6.	carbon tetrachloride	0.010	0	0				
7.	chlorobenzene	0.010	0	0				
8.	1,2,4-trichlorobenzene	0.010	0	0				
9.	hexachlorobenzene	0.010	0	0				
10.	1,2-dichloroethane	0.010	0	0				
11.	1,1,1-trichloroethane	0.010	0	0				
12.	hexachloroethane	0.010	0	0				
13.	1,1-dichloroethane	0.010	0	0				
14.	1,1,2-trichloroethane	0.010	0	0				
15.	1,1,2,2-tetrachloroethane	0.010	0	0				
16.	chloroethane	0.010	0	0				
17.	bis(chloromethyl)ether	0.010	0	0				
18.	bis(chloroethyl)ether	0.010	0	0				
19.	2-chloroethyl vinyl ether	0.010	0	0				
20.	2-chloronaphthalene	0.010	0	0				
21.	2,4,6-trichlorophenol	0.010	0	0				
22.	p-chloro-m-cresol	0.010	0	0				
23.	chloroform	0.010	0	0				
24.	2-chlorophenol	0.010	0	0				
25.	1,2-dichlorobenzene	0.010	0	0				
26.	1,3-dichlorobenzene	0.010	0	0				
27.	1,4-dichlorobenzene	0.010	0	0				
28.	3,3'-dichlorobenzidine	0.010	0	0				
29.	1,1-dichloroethylene	0.010	0	0				
30.	1,2-trans-dichloroethylene	0.010	0	0				
31.	2,4-dichlorophenol	0.010	0	0				
32.	1,2-dichloropropane	0.010	0	0				
33.	1,3-dichloropropene	0.010	0	0				
34.	2,4-dimethylphenol	0.010	0	0				
35.	2,4-dinitrotoluene	0.010	0	0				
36.	2,6-dinitrotoluene	0.010	0	0				
37.	1,2-diphenylhydrazine	0.010	0	0				
38.	ethylbenzene	0.010	0	0				
39.	fluoranthene	0.010	0	0				

Table V-17 (Continued)

FREQUENCY OF OCCURRENCE OF TOXIC POLLUTANTS
EXTRUSION DIE CLEANING SCRUBBER LIQUOR
RAW WASTEWATER

	Pollutant	Analytical Quantification Level (mg/l)	Number of Streams Analyzed	Number of Samples Analyzed	Number of Times Observed in Samples (mg/l) ND-0.010	0.011-0.100	0.101-1.000	1.000+
40.	4-chlorophenyl phenyl ether	0.010	0	0				
41.	4-bromophenyl phenyl ether	0.010	0	0				
42.	bis(2-chloroisopropyl)ether	0.010	0	0				
43.	bis(2-chloroethoxy)methane	0.010	0	0				
44.	methylene chloride	0.010	0	0				
45.	methyl chloride (chloromethane)	0.010	0	0				
46.	methyl bromide (bromomethane)	0.010	0	0				
47.	bromoform (tribromomethane)	0.010	0	0				
48.	dichlorobromomethane	0.010	0	0				
49.	trichlorofluoromethane	0.010	0	0				
50.	dichlorodifluoromethane	0.010	0	0				
51.	chlorodibromomethane	0.010	0	0				
52.	hexachlorobutadiene	0.010	0	0				
53.	hexachlorocyclopentadiene	0.010	0	0				
54.	isophorone	0.010	0	0				
55.	naphthalene	0.010	0	0				
56.	nitrobenzene	0.010	0	0				
57.	2-nitrophenol	0.010	0	0				
58.	4-nitrophenol	0.010	0	0				
59.	2,4-dinitrophenol	0.010	0	0				
60.	4,6-dinitro-o-cresol	0.010	0	0				
61.	N-nitrosodimethylamine	0.010	0	0				
62.	N-nitrosodiphenylamine	0.010	0	0				
63.	N-nitrosodi-n-propylamine	0.010	0	0				
64.	pentachlorophenol	0.010	0	0				
65.	phenol	0.010	0	0				
66.	bis (2-ethylhexyl) phthalate	0.010	0	0				
67.	butyl benzyl phthalate	0.010	0	0				
68.	di-n-butyl phthalate	0.010	0	0				
69.	di-n-octyl phthalate	0.010	0	0				
70.	diethyl phthalate	0.010	0	0				
71.	dimethyl phthalate	0.010	0	0				
72.	benzo(a)anthracene	0.010	0	0				
73.	benzo(a)pyrene	0.010	0	0				
74.	benzo(b)fluoranthene	0.010	0	0				
75.	benzo(k)fluoranthene	0.010	0	0				
76.	chrysene	0.010	0	0				
77.	acenaphthylene	0.010	0	0				
78.	anthracene (a)	0.010	0	0				

Table V-17 (Continued)

FREQUENCY OF OCCURRENCE OF TOXIC POLLUTANTS
EXTRUSION DIE CLEANING SCRUBBER LIQUOR
RAW WASTEWATER

	Pollutant	Analytical Quantification Level (mg/l)	Number of Streams Analyzed	Number of Samples Analyzed	Number of Times Observed in Samples (mg/l) ND-0.010	0.011-0.100	0.101-1.000	1.000+
79.	benzo(ghi)perylene	0.010	0	0				
80.	fluorene	0.010	0	0				
81.	phenanthrene (a)	0.010	-	-				
82.	dibenzo(a,h)anthracene	0.010	0	0				
83.	indeno (1,2,3-c,d)pyrene	0.010	0	0				
84.	pyrene	0.010	0	0				
85.	tetrachloroethylene	0.010	0	0				
86.	toluene	0.010	0	0				
87.	trichloroethylene	0.010	0	0				
88.	vinyl chloride (chloroethylene)	0.010	0	0				
89.	aldrin	0.005	0	0				
90.	dieldrin	0.005	0	0				
91.	chlordane	0.005	0	0				
92.	4,4'-DDT	0.005	0	0				
93.	4,4'-DDE	0.005	0	0				
94.	4,4'-DDD	0.005	0	0				
95.	alpha-endosulfan	0.005	0	0				
96.	beta-endosulfan	0.005	0	0				
97.	endosulfan sulfate	0.005	0	0				
98.	endrin	0.005	0	0				
99.	endrin aldehyde	0.005	0	0				
100.	heptachlor	0.005	0	0				
101.	heptachlor epoxide	0.005	0	0				
102.	alpha-BHC	0.005	0	0				
103.	beta-BHC	0.005	0	0				
104.	gamma-BHC	0.005	0	0				
105.	delta-BHC	0.005	0	0				
106.	PCB-1242 (b)	0.005	0	0				
107.	PCB-1254 (b)	0.005	-	-				
108.	PCB-1221 (b)	0.005	-	-				
109.	PCB-1232 (b)	0.005	-	-				
110.	PCB-1248 (c)	0.005	0	0				
111.	PCB-1260 (c)	0.005	-	-				
112.	PCB-1016 (c)	0.005	-	-				
113.	toxaphene	0.005	0	0				
114.	antimony	0.100	1	3	2	1		
115.	arsenic	0.010	1	3	3			
116.	asbestos	10 MFL	0	0				

Table V-17 (Continued)

FREQUENCY OF OCCURRENCE OF TOXIC POLLUTANTS
EXTRUSION DIE CLEANING SCRUBBER LIQUOR
RAW WASTEWATER

Pollutant	Analytical Quantification Level (mg/l)	Number of Streams Analyzed	Number of Samples Analyzed	Number of Times Observed in Samples (mg/l)			
				ND-0.010	0.011-0.100	0.101-1.000	1.000+
117. beryllium	0.010	1	3	3			
118. cadmium	0.002	1	3	3			
119. chromium (total)	0.005	1	3	3			
120. copper	0.009	1	3	3			
121. cyanide (total)	0.010	1	3		3		
122. lead	0.020	1	3	2	1		
123. mercury	0.0001	1	3	3			
124. nickel	0.005	1	3	3			
125. selenium	0.01	1	3	3			
126. silver	0.02	1	3	3			
127. thallium	0.100	1	3	3			
128. zinc	0.050	1	3		3		
129. 2,3,7,8-tetrachlorodibenzo-p-dioxin	0.005	0	0				

(a), (b), (c) Reported together.

Table V-18

SAMPLING DATA
EXTRUSION DIE CLEANING SCRUBBER LIQUOR
RAW WASTEWATER

Pollutant	Stream Code	Sample Type	Source	Concentrations (mg/l) Day 1	Day 2	Day 3	Average
Toxic Pollutants							
114. antimony	W-5	2	0.003	0.013	<0.001	<0.001	<0.005
118. cadmium	W-5	2	<0.001	<0.001	0.001	<0.001	<0.001
119. chromium	W-5	2	0.004	0.004	0.003	0.003	0.003
120. copper	W-5	2	0.010	0.006	0.006	0.006	0.006
121. cyanide	W-5	1	0.030	0.020	0.013	0.020	0.018
122. lead	W-5	2	0.009	0.005	0.024	0.006	0.012
124. nickel	W-5	2	0.060	<0.001	<0.001	0.003	<0.002
125. selenium	W-5	2	0.015	0.005	0.005	<0.005	<0.005
126. silver	W-5	2	0.02	0.001	<0.001	<0.001	<0.001
127. thallium	W-5	2	<0.001	0.010	<0.001	<0.001	<0.004
128. zinc	W-5	2	0.03	0.04	0.03	0.02	0.03
Nonconventional							
alkalinity	W-5	2	170	200	190	220	203
aluminum	W-5	2	0.06	1.3	0.65	0.60	0.9
calcium	W-5	2	55	49	30	30	36
chemical oxygen demand (COD)	W-5	2	12	7.7	7.5	<1	<5
dissolved solids	W-5	2	3	270	300	420	330
magnesium	W-5	2	19	18	16	15	16
phenols (total; by 4-AAP method)	W-5	1	1.00	0.0095	0.095	0.14	0.08
sulfate	W-5	2	81	70	65	80	71
total organic carbon (TOC)	W-5	2	0	5	5	4	5
Conventional							
oil and grease	W-5	1	6.6	160	7.1	5.7	58
suspended solids	W-5	2	<1	1	4	2	2
pH (standard units)	W-5	2	7.7	8.1	8.2	8.3	

Table V-19

EXTRUSION PRESS SCRUBBER LIQUOR

Plant	Water Use l/kkg	Water Use gal/ton	Percent Recycle	Wastewater l/kkg	Wastewater gal/ton
1	2,071	496.7	0	2,071	496.7
2	*	*	*	*	*

*Data not available.

Sample: 1 of 2 plants 1 of 2 plants

Table V-20

FREQUENCY OF OCCURRENCE OF TOXIC POLLUTANTS
EXTRUSION PRESS SCRUBBER LIQUOR
RAW WASTEWATER

	Pollutant	Analytical Quantification Level (mg/l)	Number of Streams Analyzed	Number of Samples Analyzed	Number of Times Observed in Samples (mg/l) ND-0.010	0.011-0.100	0.101-1.000	1.000+
1.	acenaphthene	0.010	0	0				
2.	acrolein	0.010	0	0				
3.	acrylonitrile	0.010	0	0				
4.	benzene	0.010	0	0				
5.	benzidine	0.010	0	0				
6.	carbon tetrachloride	0.010	0	0				
7.	chlorobenzene	0.010	0	0				
8.	1,2,4-trichlorobenzene	0.010	0	0				
9.	hexachlorobenzene	0.010	0	0				
10.	1,2-dichloroethane	0.010	0	0				
11.	1,1,1-trichloroethane	0.010	0	0				
12.	hexachloroethane	0.010	0	0				
13.	1,1-dichloroethane	0.010	0	0				
14.	1,1,2-trichloroethane	0.010	0	0				
15.	1,1,2,2-tetrachloroethane	0.010	0	0				
16.	chloroethane	0.010	0	0				
17.	bis(chloromethyl)ether	0.010	0	0				
18.	bis(chloroethyl)ether	0.010	0	0				
19.	2-chloroethyl vinyl ether	0.010	0	0				
20.	2-chloronaphthalene	0.010	0	0				
21.	2,4,6-trichlorophenol	0.010	0	0				
22.	p-chloro-m-cresol	0.010	0	0				
23.	chloroform	0.010	0	0				
24.	2-chlorophenol	0.010	0	0				
25.	1,2-dichlorobenzene	0.010	0	0				
26.	1,3-dichlorobenzene	0.010	0	0				
27.	1,4-dichlorobenzene	0.010	0	0				
28.	3,3'-dichlorobenzidine	0.010	0	0				
29.	1,1-dichloroethylene	0.010	0	0				
30.	1,2-trans-dichloroethylene	0.010	0	0				
31.	2,4-dichlorophenol	0.010	0	0				
32.	1,2-dichloropropane	0.010	0	0				
33.	1,3-dichloropropene	0.010	0	0				
34.	2,4-dimethylphenol	0.010	0	0				
35.	2,4-dinitrotoluene	0.010	0	0				
36.	2,6-dinitrotoluene	0.010	0	0				
37.	1,2-diphenylhydrazine	0.010	0	0				
38.	ethylbenzene	0.010	0	0				
39.	fluoranthene	0.010	0	0				

Table V-20 (Continued)

FREQUENCY OF OCCURRENCE OF TOXIC POLLUTANTS
EXTRUSION PRESS SCRUBBER LIQUOR
RAW WASTEWATER

	Pollutant	Analytical Quantification Level (mg/l)	Number of Streams Analyzed	Number of Samples Analyzed	Number of Times Observed in Samples (mg/l) ND-0.010	0.011-0.100	0.101-1.000	1.000+
40.	4-chlorophenyl phenyl ether	0.010	0	0				
41.	4-bromophenyl phenyl ether	0.010	0	0				
42.	bis(2-chloroisopropyl)ether	0.010	0	0				
43.	bis(2-chloroethoxy)methane	0.010	0	0				
44.	methylene chloride	0.010	0	0				
45.	methyl chloride (chloromethane)	0.010	0	0				
46.	methyl bromide (bromomethane)	0.010	0	0				
47.	bromoform (tribromomethane)	0.010	0	0				
48.	dichlorobromomethane	0.010	0	0				
49.	trichlorofluoromethane	0.010	0	0				
50.	dichlorodifluoromethane	0.010	0	0				
51.	chlorodibromomethane	0.010	0	0				
52.	hexachlorobutadiene	0.010	0	0				
53.	hexachlorocyclopentadiene	0.010	0	0				
54.	isophorone	0.010	0	0				
55.	naphthalene	0.010	0	0				
56.	nitrobenzene	0.010	0	0				
57.	2-nitrophenol	0.010	0	0				
58.	4-nitrophenol	0.010	0	0				
59.	2,4-dinitrophenol	0.010	0	0				
60.	4,6-dinitro-o-cresol	0.010	0	0				
61.	N-nitrosodimethylamine	0.010	0	0				
62.	N-nitrosodiphenylamine	0.010	0	0				
63.	N-nitrosodi-n-propylamine	0.010	0	0				
64.	pentachlorophenol	0.010	0	0				
65.	phenol	0.010	0	0				
66.	bis (2-ethylhexyl) phthalate	0.010	0	0				
67.	butyl benzyl phthalate	0.010	0	0				
68.	di-n-butyl phthalate	0.010	0	0				
69.	di-n-octyl phthalate	0.010	0	0				
70.	diethyl phthalate	0.010	0	0				
71.	dimethyl phthalate	0.010	0	0				
72.	benzo(a)anthracene	0.010	0	0				
73.	benzo(a)pyrene	0.010	0	0				
74.	benzo(b)fluoranthene	0.010	0	0				
75.	benzo(k)fluoranthene	0.010	0	0				
76.	chrysene	0.010	0	0				
77.	acenaphthylene	0.010	0	0				
78.	anthracene (a)	0.010	0	0				

Table V-20 (Continued)

FREQUENCY OF OCCURRENCE OF TOXIC POLLUTANTS
EXTRUSION PRESS SCRUBBER LIQUOR
RAW WASTEWATER

	Pollutant	Analytical Quantification Level (mg/l)	Number of Streams Analyzed	Number of Samples Analyzed	Number of Times Observed in Samples (mg/l) ND-0.010	0.011-0.100	0.101-1.000	1.000+
79.	benzo(ghi)perylene	0.010	0	0				
80.	fluorene	0.010	0	0				
81.	phenanthrene (a)	0.010	-	-				
82.	dibenzo(a,h)anthracene	0.010	0	0				
83.	indeno (1,2,3-c,d)pyrene	0.010	0	0				
84.	pyrene	0.010	0	0				
85.	tetrachloroethylene	0.010	0	0				
86.	toluene	0.010	0	0				
87.	trichloroethylene	0.010	0	0				
88.	vinyl chloride (chloroethylene)	0.010	0	0				
89.	aldrin	0.005	0	0				
90.	dieldrin	0.005	0	0				
91.	chlordane	0.005	0	0				
92.	4,4'-DDT	0.005	0	0				
93.	4,4'-DDE	0.005	0	0				
94.	4,4'-DDD	0.005	0	0				
95.	alpha-endosulfan	0.005	0	0				
96.	beta-endosulfan	0.005	0	0				
97.	endosulfan sulfate	0.005	0	0				
98.	endrin	0.005	0	0				
99.	endrin aldehyde	0.005	0	0				
100.	heptachlor	0.005	0	0				
101.	heptachlor epoxide	0.005	0	0				
102.	alpha-BHC	0.005	0	0				
103.	beta-BHC	0.005	0	0				
104.	gamma-BHC	0.005	0	0				
105.	delta-BHC	0.005	0	0				
106.	PCB-1242 (b)	0.005	0	0				
107.	PCB-1254 (b)	0.005	-	-				
108.	PCB-1221 (b)	0.005	-	-				
109.	PCB-1232 (b)	0.005	-	-				
110.	PCB-1248 (c)	0.005	0	0				
111.	PCB-1260 (c)	0.005	-	-				
112.	PCB-1016 (c)	0.005	-	-				
113.	toxaphene	0.005	0	0				
114.	antimony	0.100	1	3	2	1		
115.	arsenic	0.010	1	3	3			
116.	asbestos	10 MFL	0	0				

Table V-20 (Continued)

FREQUENCY OF OCCURRENCE OF TOXIC POLLUTANTS
EXTRUSION PRESS SCRUBBER LIQUOR
RAW WASTEWATER

Pollutant	Analytical Quantification Level (mg/l)	Number of Streams Analyzed	Number of Samples Analyzed	Number of Times Observed in Samples (mg/l)			
				ND-0.010	0.011-0.100	0.101-1.000	1.000+
117. beryllium	0.010	1	3	3			
118. cadmium	0.002	1	3	3			
119. chromium (total)	0.005	1	3	3			
120. copper	0.009	1	3	1	2		
121. cyanide (total)	0.010	1	3		3		
122. lead	0.020	1	3	2	1		
123. mercury	0.0001	1	3	3			
124. nickel	0.005	1	3	3			
125. selenium	0.01	1	3	2	1		
126. silver	0.02	1	3	3			
127. thallium	0.100	1	3	2	1		
128. zinc	0.050	1	3		3		
129. 2,3,7,8-tetrachlorodibenzo-p-dioxin	0.005	0	0				

(a), (b), (c) Reported together.

Table V-21

SAMPLING DATA
EXTRUSION PRESS SCRUBBER LIQUOR
RAW WASTEWATER

Pollutant	Stream Code	Sample Type	Source	Concentrations (mg/l) Day 1	Day 2	Day 3	Average
Toxic Pollutants							
114. antimony	W-7	2	0.003	0.005	0.002	0.013	0.007
115. arsenic	W-7	2	<0.005	0.003	<0.005	<0.005	<0.004
116. cadmium	W-7	2	<0.001	<0.001	<0.001	0.001	<0.001
119. chromium	W-7	2	0.004	0.006	0.002	0.005	0.004
120. copper	W-7	2	0.010	0.056	0.005	0.012	0.024
121. cyanide	W-7	1	0.030	0.020	0.022	0.013	0.018
122. lead	W-7	2	0.009	0.059	0.010	0.006	0.025
123. mercury	W-7	2	<0.002	<0.0002	<0.0002	0.0002	<0.0002
125. selenium	W-7	2	0.015	<0.005	0.021	0.005	<0.010
127. thallium	W-7	2	<0.001	<0.001	<0.001	0.012	<0.005
128. zinc	W-7	2	0.03	0.05	0.05	0.04	0.05
Nonconventional							
alkalinity	W-7	2	170	200	190	220	203
aluminum	W-7	2	0.06	0.40	5.7	0.30	2.1
calcium	W-7	2	55	30	31	30	30
chemical oxygen demand (COD)	W-7	2	12	16	100	7.9	41
dissolved solids	W-7	2	3	400	240	430	360
magnesium	W-7	2	19	17	19	16	17
phenols (total; by 4-AAP method)	W-7	1	1.0	0.011	0.012	0.012	0.012
sulfate	W-7	2	81	72	86	80	79
total organic carbon (TOC)	W-7	2	0	2	8	15	8
Conventional							
oil and grease	W-7	1	6.6	5.6	6.9	9.3	7.3
suspended solids	W-7	2	<1	3	6	5	5
pH (standard units)	W-7		7.7	8.4	8.3	8.1	

Table V-22

EXTRUSION DUMMY BLOCK CONTACT COOLING WATER

Plant	Water Use l/kkg	Water Use gal/ton	Percent Recycle	Wastewater l/kkg	Wastewater gal/ton
1	2,072	497.0	0	2,072	497.0
2	2,172	521.0	0	2,172	521.0
3	*	*	0	*	*

*Data not available.

Statistical Summary

Mean	2,122	509.0		2,122	509.0
Sample:	2 of 3 plants			2 of 3 plants	

Table V-23

FREQUENCY OF OCCURRENCE OF TOXIC POLLUTANTS
EXTRUSION DUMMY BLOCK CONTACT COOLING WATER
RAW WASTEWATER

	Pollutant	Analytical Quantification Level (mg/l)	Number of Streams Analyzed	Number of Samples Analyzed	Number of Times Observed in Samples (mg/l) ND-0.010	0.011-0.100	0.101-1.000	1.000+
1.	acenaphthene	0.010	1	1	1			
2.	acrolein	0.010	1	1	1			
3.	acrylonitrile	0.010	1	1	1			
4.	benzene	0.010	1	1	1			
5.	benzidine	0.010	1	1	1			
6.	carbon tetrachloride	0.010	1	1	1			
7.	chlorobenzene	0.010	1	1	1			
8.	1,2,4-trichlorobenzene	0.010	1	1	1			
9.	hexachlorobenzene	0.010	1	1	1			
10.	1,2-dichloroethane	0.010	1	1	1			
11.	1,1,1-trichloroethane	0.010	1	1	1			
12.	hexachloroethane	0.010	1	1	1			
13.	1,1-dichloroethane	0.010	1	1	1			
14.	1,1,2-trichloroethane	0.010	1	1	1			
15.	1,1,2,2-tetrachloroethane	0.010	1	1	1			
16.	chloroethane	0.010	1	1	1			
17.	bis(chloromethyl)ether	0.010	1	1	1			
18.	bis(chloroethyl)ether	0.010	1	1	1			
19.	2-chloroethyl vinyl ether	0.010	1	1	1			
20.	2-chloronaphthalene	0.010	1	1	1			
21.	2,4,6-trichlorophenol	0.010	1	1	1			
22.	p-chloro-m-cresol	0.010	1	1	1			
23.	chloroform	0.010	1	1		1		
24.	2-chlorophenol	0.010	1	1	1			
25.	1,2-dichlorobenzene	0.010	1	1	1			
26.	1,3-dichlorobenzene	0.010	1	1	1			
27.	1,4-dichlorobenzene	0.010	1	1	1			
28.	3,3'-dichlorobenzidine	0.010	1	1	1			
29.	1,1-dichloroethylene	0.010	1	1	1			
30.	1,2-trans-dichloroethylene	0.010	1	1	1			
31.	2,4-dichlorophenol	0.010	1	1	1			
32.	1,2-dichloropropane	0.010	1	1	1			
33.	1,3-dichloropropene	0.010	1	1	1			
34.	2,4-dimethylphenol	0.010	1	1	1			
35.	2,4-dinitrotoluene	0.010	1	1	1			
36.	2,6-dinitrotoluene	0.010	1	1	1			
37.	1,2-diphenylhydrazine	0.010	1	1	1			
38.	ethylbenzene	0.010	1	1	1			
39.	fluoranthene	0.010	1	1	1			

Table V-23 (Continued)

FREQUENCY OF OCCURRENCE OF TOXIC POLLUTANTS
EXTRUSION DUMMY BLOCK CONTACT COOLING WATER
RAW WASTEWATER

	Pollutant	Analytical Quantification Level (mg/l)	Number of Streams Analyzed	Number of Samples Analyzed	Number of Times Observed in Samples (mg/l) ND-0.010	0.011-0.100	0.101-1.000	1.000+
40.	4-chlorophenyl phenyl ether	0.010	1	1	1			
41.	4-bromophenyl phenyl ether	0.010	1	1	1			
42.	bis(2-chloroisopropyl)ether	0.010	1	1	1			
43.	bis(2-chloroethoxy)methane	0.010	1	1	1			
44.	methylene chloride	0.010	1	1	1			
45.	methyl chloride (chloromethane)	0.010	1	1	1			
46.	methyl bromide (bromomethane)	0.010	1	1	1			
47.	bromoform (tribromomethane)	0.010	1	1	1			
48.	dichlorobromomethane	0.010	1	1	1			
49.	trichlorofluoromethane	0.010	1	1	1			
50.	dichlorodifluoromethane	0.010	1	1	1			
51.	chlorodibromomethane	0.010	1	1	1			
52.	hexachlorobutadiene	0.010	1	1	1			
53.	hexachlorocyclopentadiene	0.010	1	1	1			
54.	isophorone	0.010	1	1	1			
55.	naphthalene	0.010	1	1	1			
56.	nitrobenzene	0.010	1	1	1			
57.	2-nitrophenol	0.010	1	1	1			
58.	4-nitrophenol	0.010	1	1	1			
59.	2,4-dinitrophenol	0.010	1	1	1			
60.	4,6-dinitro-o-cresol	0.010	1	1	1			
61.	N-nitrosodimethylamine	0.010	1	1	1			
62.	N-nitrosodiphenylamine	0.010	1	1	1			
63.	N-nitrosodi-n-propylamine	0.010	1	1	1			
64.	pentachlorophenol	0.010	1	1	1			
65.	phenol	0.010	1	1	1			
66.	bis (2-ethylhexyl) phthalate	0.010	1	1	1			
67.	butyl benzyl phthalate	0.010	1	1	1			
68.	di-n-butyl phthalate	0.010	1	1	1			
69.	di-n-octyl phthalate	0.010	1	1	1			
70.	diethyl phthalate	0.010	1	1	1			
71.	dimethyl phthalate	0.010	1	1	1			
72.	benzo(a)anthracene	0.010	1	1	1			
73.	benzo(a)pyrene	0.010	1	1	1			
74.	benzo(b)fluoranthene	0.010	1	1	1			
75.	benzo(k)fluoranthene	0.010	1	1	1			
76.	chrysene	0.010	1	1	1			
77.	acenaphthylene	0.010	1	1	1			
78.	anthracene (a)	0.010	1	1	1			

Table V-23 (Continued)

FREQUENCY OF OCCURRENCE OF TOXIC POLLUTANTS
EXTRUSION DUMMY BLOCK CONTACT COOLING WATER
RAW WASTEWATER

	Pollutant	Analytical Quantification Level (mg/l)	Number of Streams Analyzed	Number of Samples Analyzed	Number of Times Observed in Samples (mg/l) ND-0.010	0.011-0.100	0.101-1.000	1.000+
79.	benzo(ghi)perylene	0.010	1	1	1			
80.	fluorene	0.010	1	1	1			
81.	phenanthrene (a)	0.010	-	-				
82.	dibenzo(a,h)anthracene	0.010	1	1	1			
83.	indeno (1,2,3-c,d)pyrene	0.010	1	1	1			
84.	pyrene	0.010	1	1	1			
85.	tetrachloroethylene	0.010	1	1	1			
86.	toluene	0.010	1	1	1			
87.	trichloroethylene	0.010	1	1	1			
88.	vinyl chloride (chloroethylene)	0.010	1	1	1			
89.	aldrin	0.005	1	1	1			
90.	dieldrin	0.005	1	1	1			
91.	chlordane	0.005	1	1	1			
92.	4,4'-DDT	0.005	1	1	1			
93.	4,4'-DDE	0.005	1	1	1			
94.	4,4'-DDD	0.005	1	1	1			
95.	alpha-endosulfan	0.005	1	1	1			
96.	beta-endosulfan	0.005	1	1	1			
97.	endosulfan sulfate	0.005	1	1	1			
98.	endrin	0.005	1	1	1			
99.	endrin aldehyde	0.005	1	1	1			
100.	heptachlor	0.005	1	1	1			
101.	heptachlor epoxide	0.005	1	1	1			
102.	alpha-BHC	0.005	1	1	1			
103.	beta-BHC	0.005	1	1	1			
104.	gamma-BHC	0.005	1	1	1			
105.	delta-BHC	0.005	1	1	1			
106.	PCB-1242 (b)	0.005	1	1	1			
107.	PCB-1254 (b)	0.005	-	-				
108.	PCB-1221 (b)	0.005	-	-				
109.	PCB-1232 (b)	0.005	-	-				
110.	PCB-1248 (c)	0.005	1	1	1			
111.	PCB-1260 (c)	0.005	-	-				
112.	PCB-1016 (c)	0.005	-	-				
113.	toxaphene	0.005	1	1	1			
114.	antimony	0.100	1	1	1			
115.	arsenic	0.010	1	1	1			
116.	asbestos	10 MFL	0	0				

Table V-23 (Continued)

FREQUENCY OF OCCURRENCE OF TOXIC POLLUTANTS
EXTRUSION DUMMY BLOCK CONTACT COOLING WATER
RAW WASTEWATER

Pollutant	Analytical Quantification Level (mg/l)	Number of Streams Analyzed	Number of Samples Analyzed	Number of Times Observed in Samples (mg/l)			
				ND-0.010	0.011-0.100	0.101-1.000	1.000+
117. beryllium	0.010	1	1	1			
118. cadmium	0.002	1	1	1			
119. chromium (total)	0.005	1	1	1			
120. copper	0.009	1	1	1			
121. cyanide (total)	0.010	1	1	1			
122. lead	0.020	1	1	1			
123. mercury	0.0001	1	1	1			
124. nickel	0.005	1	1	1			
125. selenium	0.01	0	0				
126. silver	0.02	0	0				
127. thallium	0.100	0	0				
128. zinc	0.050	1	1	1			
129. 2,3,7,8-tetrachlorodibenzo-p-dioxin	0.005	0	0				

(a), (b), (c) Reported together.

Table V-24

SAMPLING DATA
EXTRUSION DUMMY BLOCK COOLING
RAW WASTEWATER

Pollutant	Stream Code	Sample Type	Source	Concentrations (mg/l) Day 1	Day 2	Day 3	Average
Toxic Pollutants							
23. chloroform	L-4	1	0.100	0.080			0.080
Nonconventional							
alkalinity	L-4	2		32			32
aluminum	L-4	2	<0.5	<0.5			<0.5
calcium	L-4	2	9	10			10
chemical oxygen demand (COD)	L-4	2	<5	<5			<5
dissolved solids	L-4	2		50			50
magnesium	L-4	2	2.24	2.1			2.1
phenols (total; by 4-AAP method)	L-4	2		0.002			0.002
sulfate	L-4	2		72			72
total organic carbon (TOC)	L-4	2	2.8	2.40			2.40
Conventional							
oil and grease	L-4	1		74			74
suspended solids	L-4	2	<2	<2			<2
pH (standard units)	L-4	2		7.8			

Table V-25

DRAWING WITH NEAT OILS SPENT LUBRICANT

Plant	Water Use l/kkg	Water Use gal/ton	Percent Recycle	Wastewater l/kkg	Wastewater gal/ton
1	*	*	100	0	0
2	*	*	100	0	0
3	*	*	*	5.420	1.300
4	*	*	*	8.147	1.954
5	5.879	1.410	*	*	*

*Data not available.

Statistical Summary

Minimum	0	0
Maximum	8.147	1.954
Mean	3.392	0.8135
Median	2.710	0.6500
Sample:	4 of 66 plants	
Nonzero Mean	6.784	1.627
Sample:	2 of 66 plants	

Note: Table does not include 61 plants which provided insufficient information to calculate water use and wastewater values.

Table V-26

DRAWING WITH EMULSIONS OR SOAPS SPENT EMULSION

Plant	Water Use l/kkg	Water Use gal/ton	Percent Recycle	Wastewater l/kkg	Wastewater gal/ton
1	*	*	*	0	0
2	*	*	P	3.377	0.8100
3	*	*	P	11.72	2.810
4	*	*	P	26.18	6.279
5	*	*	P	260.6	62.50
6	*	*	*	1,084	260.0
7	*	*	99 P	1,113	267.0
8	1,072,000	257,100	0	1,072,000	257,100
9	*	*	*	*	*
10	*	*	*	*	*
11	*	*	*	*	*
12	*	*	*	*	*
13	*	*	*	*	*

*Data not available.
P Periodic discharge.

Statistical Summary

Minimum	0	0
Maximum	1,072,000	257,100
Mean	134,300	32,210
Median	143.4	34.39
Sample:	8 of 13 plants	
Nonzero Mean	153,500	36,810
Sample:	7 of 13 plants	
Nonzero Mean with Recycle	416.5	99.90
Sample:	6 of 13 plants	

Table V-27

FREQUENCY OF OCCURRENCE OF TOXIC POLLUTANTS
DRAWING WITH EMULSIONS OR SOAPS SPENT EMULSION
RAW WASTEWATER

	Pollutant	Analytical Quantification Level (mg/l)	Number of Streams Analyzed	Number of Samples Analyzed	Number of Times Observed in Samples (mg/l) ND-0.010	0.011-0.100	0.101-1.000	1.000+
1.	acenaphthene	0.010	1	1	1			
2.	acrolein	0.010	0	0				
3.	acrylonitrile	0.010	0	0				
4.	benzene	0.010	0	0				
5.	benzidine	0.010	1	1	1			
6.	carbon tetrachloride	0.010	0	0				
7.	chlorobenzene	0.010	0	0				
8.	1,2,4-trichlorobenzene	0.010	1	1	1			
9.	hexachlorobenzene	0.010	1	1	1			
10.	1,2-dichloroethane	0.010	0	0				
11.	1,1,1-trichloroethane	0.010	0	0				
12.	hexachloroethane	0.010	1	1	1			
13.	1,1-dichloroethane	0.010	0	0				
14.	1,1,2-trichloroethane	0.010	0	0				
15.	1,1,2,2-tetrachloroethane	0.010	0	0				
16.	chloroethane	0.010	0	0				
17.	bis(chloromethyl)ether	0.010	1	1	1			
18.	bis(chloroethyl)ether	0.010	1	1	1			
19.	2-chloroethyl vinyl ether	0.010	0	0				
20.	2-chloronaphthalene	0.010	1	1	1			
21.	2,4,6-trichlorophenol	0.010	1	1	1			
22.	p-chloro-m-cresol	0.010	1	1		1		
23.	chloroform	0.010	0	0				
24.	2-chlorophenol	0.010	1	1			1	
25.	1,2-dichlorobenzene	0.010	1	1	1			
26.	1,3-dichlorobenzene	0.010	1	1	1			
27.	1,4-dichlorobenzene	0.010	1	1	1			
28.	3,3'-dichlorobenzidine	0.010	1	1	1			
29.	1,1-dichloroethylene	0.010	0	0				
30.	1,2-trans-dichloroethylene	0.010	0	0				
31.	2,4-dichlorophenol	0.010	1	1	1			
32.	1,2-dichloropropane	0.010	0	0				
33.	1,3-dichloropropene	0.010	0	0				
34.	2,4-dimethylphenol	0.010	1	1	1			
35.	2,4-dinitrotoluene	0.010	1	1		1		
36.	2,6-dinitrotoluene	0.010	1	1	1			
37.	1,2-diphenylhydrazine	0.010	1	1		1		
38.	ethylbenzene	0.010	0	0				
39.	fluoranthene	0.010	1	1	1			

Table V-27 (Continued)

FREQUENCY OF OCCURRENCE OF TOXIC POLLUTANTS
DRAWING WITH EMULSIONS OR SOAPS SPENT EMULSION
RAW WASTEWATER

	Pollutant	Analytical Quantification Level (mg/l)	Number of Streams Analyzed	Number of Samples Analyzed	Number of Times Observed in Samples (mg/l) ND-0.010	0.011-0.100	0.101-1.000	1.000+
40.	4-chlorophenyl phenyl ether	0.010	1	1	1			
41.	4-bromophenyl phenyl ether	0.010	1	1	1			
42.	bis(2-chloroisopropyl)ether	0.010	1	1	1			
43.	bis(2-chloroethoxy)methane	0.010	1	1	1			
44.	methylene chloride	0.010	0	0				
45.	methyl chloride (chloromethane)	0.010	0	0				
46.	methyl bromide (bromomethane)	0.010	0	0				
47.	bromoform (tribromomethane)	0.010	0	0				
48.	dichlorobromomethane	0.010	0	0				
49.	trichlorofluoromethane	0.010	0	0				
50.	dichlorodifluoromethane	0.010	0	0				
51.	chlorodibromomethane	0.010	0	0				
52.	hexachlorobutadiene	0.010	1	1	1			
53.	hexachlorocyclopentadiene	0.010	1	1	1			
54.	isophorone	0.010	1	1		1		
55.	naphthalene	0.010	1	1	1			
56.	nitrobenzene	0.010	1	1	1			
57.	2-nitrophenol	0.010	1	1	1			
58.	4-nitrophenol	0.010	1	1	1			
59.	2,4-dinitrophenol	0.010	1	1	1			
60.	4,6-dinitro-o-cresol	0.010	1	1	1			
61.	N-nitrosodimethylamine	0.010	1	1	1			
62.	N-nitrosodiphenylamine	0.010	1	1	1			
63.	N-nitrosodi-n-propylamine	0.010	1	1	1			
64.	pentachlorophenol	0.010	1	1	1			
65.	phenol	0.010	1	1	1			
66.	bis (2-ethylhexyl) phthalate	0.010	1	1		1		
67.	butyl benzyl phthalate	0.010	1	1	1			
68.	di-n-butyl phthalate	0.010	1	1		1		
69.	di-n-octyl phthalate	0.010	1	1		1		
70.	diethyl phthalate	0.010	1	1	1			
71.	dimethyl phthalate	0.010	1	1	1			
72.	benzo(a)anthracene	0.010	1	1	1			
73.	benzo(a)pyrene	0.010	1	1	1			
74.	benzo(b)fluoranthene	0.010	1	1	1			
75.	benzo(k)fluoranthene	0.010	1	1	1			
76.	chrysene	0.010	1	1	1			
77.	acenaphthylene	0.010	1	1	1			
78.	anthracene (a)	0.010	1	1	1			

Table V-27 (Continued)

FREQUENCY OF OCCURRENCE OF TOXIC POLLUTANTS
DRAWING WITH EMULSIONS OR SOAPS SPENT EMULSION
RAW WASTEWATER

	Pollutant	Analytical Quantification Level (mg/l)	Number of Streams Analyzed	Number of Samples Analyzed	Number of Times Observed in Samples (mg/l) ND-0.010	0.011-0.100	0.101-1.000	1.000+
79.	benzo(ghi)perylene	0.010	1	1	1			
80.	fluorene	0.010	1	1	1			
81.	phenanthrene (a)	0.010	-	-				
82.	dibenzo(a,h)anthracene	0.010	1	1	1			
83.	indeno (1,2,3-c,d)pyrene	0.010	1	1	1			
84.	pyrene	0.010	1	1	1			
85.	tetrachloroethylene	0.010	0	0				
86.	toluene	0.010	0	0				
87.	trichloroethylene	0.010	0	0				
88.	vinyl chloride (chloroethylene)	0.010	0	0				
89.	aldrin	0.005	1	1	1			
90.	dieldrin	0.005	1	1	1			
91.	chlordane	0.005	1	1	1			
92.	4,4'-DDT	0.005	1	1	1			
93.	4,4'-DDE	0.005	1	1	1			
94.	4,4'-DDD	0.005	1	1	1			
95.	alpha-endosulfan	0.005	1	1	1			
96.	beta-endosulfan	0.005	1	1	1			
97.	endosulfan sulfate	0.005	1	1	1			
98.	endrin	0.005	1	1	1			
99.	endrin aldehyde	0.005	1	1	1			
100.	heptachlor	0.005	1	1	1			
101.	heptachlor epoxide	0.005	1	1	1			
102.	alpha-BHC	0.005	1	1	1			
103.	beta-BHC	0.005	1	1	1			
104.	gamma-BHC	0.005	1	1	1			
105.	delta-BHC	0.005	1	1	1			
106.	PCB-1242 (b)	0.005	1	1	1			
107.	PCB-1254 (b)	0.005	-	-				
108.	PCB-1221 (b)	0.005	-	-				
109.	PCB-1232 (b)	0.005	-	-				
110.	PCB-1248 (c)	0.005	1	1	1			
111.	PCB-1260 (c)	0.005	-	-				
112.	PCB-1016 (c)	0.005	-	-				
113.	toxaphene	0.005	1	1	1			
114.	antimony	0.100	0	0				
115.	arsenic	0.010	0	0				
116.	asbestos	10 MFL	0	0				

Table V-27 (Continued)

FREQUENCY OF OCCURRENCE OF TOXIC POLLUTANTS
DRAWING WITH EMULSIONS OR SOAPS SPENT EMULSION
RAW WASTEWATER

Pollutant	Analytical Quantification Level (mg/l)	Number of Streams Analyzed	Number of Samples Analyzed	Number of Times Observed in Samples (mg/l)			
				ND-0.010	0.011-0.100	0.101-1.000	1.000+
117. beryllium	0.010	0	0				
118. cadmium	0.002	0	0				
119. chromium (total)	0.005	0	0				
120. copper	0.009	0	0				
121. cyanide (total)	0.010	0	0				
122. lead	0.020	0	0				
123. mercury	0.0001	0	0				
124. nickel	0.005	0	0				
125. selenium	0.01	0	0				
126. silver	0.02	0	0				
127. thallium	0.100	0	0				
128. zinc	0.050	0	0				
129. 2,3,7,8-tetrachlorodibenzo-p-dioxin	0.005	0	0				

(a), (b), (c) Reported together.

Table V-28

SAMPLING DATA
DRAWING WITH EMULSIONS OR SOAPS SPENT EMULSION
RAW WASTEWATER

Pollutant	Stream Code	Sample Type	Source	Concentrations (mg/l) Day 1	Day 2	Day 3	Average
Toxic Pollutants							
22. p-chloro-m-cresol	S-2	1	ND	0.028			0.028
24. 2-chlorophenol	S-2	1	ND	0.130			0.130
35. 2,4-dinitrotoluene	S-2	1	ND	0.077			0.077
37. 1,2-diphenylhydrazine	S-2	1	ND	0.071			0.071
54. isophorone	S-2	1	ND	0.039			0.039
66. bis(2-ethylhexyl) phthalate	S-2	1	*	0.034			0.034
68. di-n-butyl phthalate	S-2	1	ND	0.023			0.023
69. di-n-octyl phthalate	S-2	1	*	0.023			0.023
Conventional							
oil and grease	S-2	1	5	51,540			51,540

Table V-29

SAWING SPENT LUBRICANT

Plant	Water Use l/kkg	Water Use gal/ton	Percent Recycle	Wastewater l/kkg	Wastewater gal/ton
1	0.5212	0.1250	0	0	0
2	*	*	*	0.4586	0.0110
3	*	*	*	0.6671	0.1600
4	*	*	*	1.167	0.2800
5	1.438	0.3450	0	1.438	0.3450
6	*	*	*	6.379	1.530
7	*	*	*	19.14	4.590
8	*	*	*	*	*
9	*	*	*	*	*
10	*	*	*	*	*
11	*	*	*	*	*
12	*	*	*	*	*

*Sufficient data not available to calculate these values.

Statistical Summary

Minimum	0	0
Maximum	19.14	4.590
Mean	4.119	0.9880
Median	1.167	0.2800
Sample:	7 of 12 plants	
Nonzero Mean	4.807	1.153
Sample:	6 of 12 plants	

Table V-30

FREQUENCY OF OCCURRENCE OF TOXIC POLLUTANTS
SAWING SPENT LUBRICANT
RAW WASTEWATER

	Pollutant	Analytical Quantification Level (mg/l)	Number of Streams Analyzed	Number of Samples Analyzed	Number of Times Observed in Samples (mg/l)			
					ND-0.010	0.011-0.100	0.101-1.000	1.000+
1.	acenaphthene	0.010	1	1	1			
2.	acrolein	0.010	1	1	1			
3.	acrylonitrile	0.010	1	1	1			
4.	benzene	0.010	1	1	1			
5.	benzidine	0.010	1	1	1			
6.	carbon tetrachloride	0.010	1	1	1			
7.	chlorobenzene	0.010	1	1	1			
8.	1,2,4-trichlorobenzene	0.010	1	1	1			
9.	hexachlorobenzene	0.010	1	1	1			
10.	1,2-dichloroethane	0.010	1	1	1			
11.	1,1,1-trichloroethane	0.010	1	1	1			
12.	hexachloroethane	0.010	1	1	1			
13.	1,1-dichloroethane	0.010	1	1	1			
14.	1,1,2-trichloroethane	0.010	1	1	1			
15.	1,1,2,2-tetrachloroethane	0.010	1	1	1			
16.	chloroethane	0.010	1	1	1			
17.	bis(chloromethyl)ether	0.010	1	1	1			
18.	bis(chloroethyl)ether	0.010	1	1	1			
19.	2-chloroethyl vinyl ether	0.010	1	1	1			
20.	2-chloronaphthalene	0.010	1	1	1			
21.	2,4,6-trichlorophenol	0.010	1	1	1			
22.	p-chloro-m-cresol	0.010	1	1	1			
23.	chloroform	0.010	1	1	1			
24.	2-chlorophenol	0.010	1	1	1			
25.	1,2-dichlorobenzene	0.010	1	1	1			
26.	1,3-dichlorobenzene	0.010	1	1	1			
27.	1,4-dichlorobenzene	0.010	1	1	1			
28.	3,3'-dichlorobenzidine	0.010	1	1	1			
29.	1,1-dichloroethylene	0.010	1	1	1			
30.	1,2-trans-dichloroethylene	0.010	1	1	1			
31.	2,4-dichlorophenol	0.010	1	1	1			
32.	1,2-dichloropropane	0.010	1	1	1			
33.	1,3-dichloropropene	0.010	1	1	1			
34.	2,4-dimethylphenol	0.010	1	1	1			
35.	2,4-dinitrotoluene	0.010	1	1	1			
36.	2,6-dinitrotoluene	0.010	1	1	1			
37.	1,2-diphenylhydrazine	0.010	1	1	1			
38.	ethylbenzene	0.010	1	1	1			
39.	fluoranthene	0.010	1	1	1			

Table V-30 (Continued)

FREQUENCY OF OCCURRENCE OF TOXIC POLLUTANTS
SAWING SPENT LUBRICANT
RAW WASTEWATER

	Pollutant	Analytical Quantification Level (mg/l)	Number of Streams Analyzed	Number of Samples Analyzed	Number of Times Observed in Samples (mg/l) ND-0.010	0.011-0.100	0.101-1.000	1.000+
40.	4-chlorophenyl phenyl ether	0.010	1	1	1			
41.	4-bromophenyl phenyl ether	0.010	1	1	1			
42.	bis(2-chloroisopropyl)ether	0.010	1	1	1			
43.	bis(2-chloroethoxy)methane	0.010	1	1	1			
44.	methylene chloride	0.010	1	1	1			
45.	methyl chloride (chloromethane)	0.010	1	1	1			
46.	methyl bromide (bromomethane)	0.010	1	1	1			
47.	bromoform (tribromomethane)	0.010	1	1	1			
48.	dichlorobromomethane	0.010	1	1	1			
49.	trichlorofluoromethane	0.010	1	1	1			
50.	dichlorodifluoromethane	0.010	1	1	1			
51.	chlorodibromomethane	0.010	1	1	1			
52.	hexachlorobutadiene	0.010	1	1	1			
53.	hexachlorocyclopentadiene	0.010	1	1	1			
54.	isophorone	0.010	1	1	1			
55.	naphthalene	0.010	1	1	1			
56.	nitrobenzene	0.010	1	1	1			
57.	2-nitrophenol	0.010	1	1	1			
58.	4-nitrophenol	0.010	1	1	1			
59.	2,4-dinitrophenol	0.010	1	1	1			
60.	4,6-dinitro-o-cresol	0.010	1	1	1			
61.	N-nitrosodimethylamine	0.010	1	1	1			
62.	N-nitrosodiphenylamine	0.010	1	1	1			
63.	N-nitrosodi-n-propylamine	0.010	1	1	1			
64.	pentachlorophenol	0.010	1	1	1			
65.	phenol	0.010	1	1	1			
66.	bis (2-ethylhexyl) phthalate	0.010	1	1	1			
67.	butyl benzyl phthalate	0.010	1	1	1			
68.	di-n-butyl phthalate	0.010	1	1	1			
69.	di-n-octyl phthalate	0.010	1	1	1			
70.	diethyl phthalate	0.010	1	1	1			
71.	dimethyl phthalate	0.010	1	1	1			
72.	benzo(a)anthracene	0.010	1	1	1			
73.	benzo(a)pyrene	0.010	1	1	1			
74.	benzo(b)fluoranthene	0.010	1	1	1			
75.	benzo(k)fluoranthene	0.010	1	1	1			
76.	chrysene	0.010	1	1	1			
77.	acenaphthylene	0.010	1	1	1			
78.	anthracene (a)	0.010	1	1	1			

Table V-30 (Continued)

FREQUENCY OF OCCURRENCE OF TOXIC POLLUTANTS
SAWING SPENT LUBRICANT
RAW WASTEWATER

	Pollutant	Analytical Quantification Level (mg/l)	Number of Streams Analyzed	Number of Samples Analyzed	Number of Times Observed in Samples (mg/l) ND-0.010	0.011-0.100	0.101-1.000	1.000+
79.	benzo(ghi)perylene	0.010	1	1	1			
80.	fluorene	0.010	1	1	1			
81.	phenanthrene (a)	0.010	-	-				
82.	dibenzo(a,h)anthracene	0.010	1	1	1			
83.	indeno (1,2,3-c,d)pyrene	0.010	1	1	1			
84.	pyrene	0.010	1	1	1			
85.	tetrachloroethylene	0.010	1	1				1
86.	toluene	0.010	1	1	1			
87.	trichloroethylene	0.010	1	1	1			
88.	vinyl chloride (chloroethylene)	0.010	1	1	1			
89.	aldrin	0.005	1	1	1			
90.	dieldrin	0.005	1	1	1			
91.	chlordane	0.005	1	1	1			
92.	4,4'-DDT	0.005	1	1	1			
93.	4,4'-DDE	0.005	1	1	1			
94.	4,4'-DDD	0.005	1	1	1			
95.	alpha-endosulfan	0.005	1	1	1			
96.	beta-endosulfan	0.005	1	1	1			
97.	endosulfan sulfate	0.005	1	1	1			
98.	endrin	0.005	1	1	1			
99.	endrin aldehyde	0.005	1	1	1			
100.	heptachlor	0.005	1	1	1			
101.	heptachlor epoxide	0.005	1	1	1			
102.	alpha-BHC	0.005	1	1	1			
103.	beta-BHC	0.005	1	1	1			
104.	gamma-BHC	0.005	1	1	1			
105.	delta-BHC	0.005	1	1	1			
106.	PCB-1242 (b)	0.005	1	1	1			
107.	PCB-1254 (b)	0.005	-	-				
108.	PCB-1221 (b)	0.005	-	-				
109.	PCB-1232 (b)	0.005	-	-				
110.	PCB-1248 (c)	0.005	1	1	1			
111.	PCB-1260 (c)	0.005	-	-				
112.	PCB-1016 (c)	0.005	-	-				
113.	toxaphene	0.005	1	1	1			
114.	antimony	0.100	3	4	3		1	
115.	arsenic	0.010	3	4	3	0	1	0
116.	asbestos	10 MFL	0	0				

Table V-30 (Continued)

FREQUENCY OF OCCURRENCE OF TOXIC POLLUTANTS
SAWING SPENT LUBRICANT
RAW WASTEWATER

Pollutant	Analytical Quantification Level (mg/l)	Number of Streams Analyzed	Number of Samples Analyzed	Number of Times Observed in Samples (mg/l)			
				ND-0.010	0.011-0.100	0.101-1.000	1.000+
117. beryllium	0.010	3	4	4	0		0
118. cadmium	0.002	3	4	2	2		0
119. chromium (total)	0.005	3	4	3	0	1	0
120. copper	0.009	3	4	1	1	1	1
121. cyanide (total)	0.010	3	4	4	0		
122. lead	0.020	3	4	1	0	3	
123. mercury	0.0001	3	4	4			
124. nickel	0.005	3	4	2	1	1	
125. selenium	0.01	3	4	4	0		
126. silver	0.02	3	4	4		0	
127. thallium	0.100	3	4	4	0		
128. zinc	0.050	3	4		0	2	2
129. 2,3,7,8-tetrachlorodibenzo-p-dioxin	0.005	0	0				

(a), (b), (c) Reported together.

Table V-31

SAMPLING DATA
SAWING SPENT LUBRICANT
RAW WASTEWATER

Pollutant	Stream Code	Sample Type	Source	Concentrations (mg/l) Day 1	Day 2	Day 3	Average
Toxic Pollutants							
114. antimony	AA-10	4	<0.010	0.010	<0.010		<0.055
	CC-3	1	<0.010	0.210			0.210
	DD-2	1	<0.002		0.007		0.007
115. arsenic	AA-10	4	<0.010	<0.010	<0.100		<0.055
	CC-3	1	<0.010	<0.020*			<0.020
	DD-2	1	<0.001		0.208		0.208
117. beryllium	AA-10	4	<0.005	<5.0	<0.050		<2.525
	CC-3	1	<0.005	<0.005			<0.005
	DD-2	1	<0.010		<0.010		<0.010
118. cadmium	AA-10	4	<0.020	<0.020	<2.000		<1.01
	CC-3	1	<0.020	0.020			0.020
	DD-2	1	<0.010		0.012		0.012
119. chromium	AA-10	4	<0.020	<0.020	<2.000		<1.01
	CC-3	1	<0.020	0.160			0.160
	DD-2	1	<0.020		<0.020		<0.020
120. copper	AA-10	4	<0.050	0.100	<5.000		<2.55
	CC-3	1	<0.050	1.250			1.250
	DD-2	1	0.013		0.390		0.390
121. cyanide (total)	AA-10	4	<0.02	<0.02	<0.02		<0.02
	CC-3	1	<0.02	<0.02			<0.02
	DD-2	1	<0.02		<0.02		<0.02
122. lead	AA-10	4	<0.050	0.150	0.500		0.325
	CC-3	1	<0.050	0.450			0.450
	DD-2	1	<0.100		<0.100		<0.100
123. mercury	AA-10	4	<0.0002	<0.0002	<0.0002		<0.0002
	CC-3	1	0.0004	<0.0002			<0.0002
	DD-2	1	<0.005		<0.005		<0.005
124. nickel	AA-10	4	<0.050	<0.050	<0.500		<0.275
	CC-3	1	<0.050	0.050			0.050
	DD-2	1	<0.050		0.122		0.122

Table V-31 (Continued)

SAMPLING DATA
SAWING SPENT LUBRICANT
RAW WASTEWATER

Pollutant	Stream Code	Sample Type	Source	Concentrations (mg/l) Day 1	Day 2	Day 3	Average
125. selenium	AA-10	4	<0.010	<0.010	<0.100		<0.055
	CC-3	1	<0.010	<0.020*			<0.020
	DD-2	1	<0.005		<0.005		<0.005
126. silver	AA-10	4	<0.010	<0.010	<0.100		<0.055
	CC-3	1	<0.005	<0.005			<0.005
	DD-2	1	<0.001		0.002		0.002
127. thallium	AA-10	4	<0.010	<0.010	<0.100		<0.055
	CC-3	1	<0.010	<0.010			<0.010
	DD-2	1	<0.001		<0.001		<0.001
128. zinc	AA-10	4	<0.020	0.180	0.600		0.390
	CC-3	1	1.10	12.9			12.9
	DD-2	1	<0.010		6.76		6.76
Nonconventional							
aluminum	AA-10	4	<0.100	2.4	16.0		9.2
	CC-3	1	1.10	75.4			75.4
	DD-2	1	<0.050		185		185
barium	AA-10	4	0.250	0.100	<0.500		<0.300
	CC-3	1	<0.050	0.400			0.400
	DD-2	1	0.179		0.229		0.229
boron	AA-10	4	<0.100	2.8	<1.00		<1.9
	CC-3	1	0.400	0.300			0.300
	DD-2	1	<0.100		<0.100		<0.100
calcium	AA-10	4	117	74.1	84.0		79.1
	CC-3	1	36.9	88.1			88.1
	DD-2	1	5.68		5.72		5.72
cobalt	AA-10	4	<0.050	<0.050	<0.500		<0.275
	CC-3	1	<0.050	<0.050			<0.050
	DD-2	1	<0.010		<0.010		<0.010
iron	AA-10	4	2.85	2.05	10.5		6.275
	CC-3	1	0.050	8.1			8.1
	DD-2	1	0.054		18.0		18.0

Table V-31 (Continued)

SAMPLING DATA
SAWING SPENT LUBRICANT
RAW WASTEWATER

Pollutant	Stream Code	Sample Type	Source	Concentrations (mg/l) Day 1	Day 2	Day 3	Average
magnesium	AA-10	4	33.9	40.0	43.0		41.5
	CC-3	1	7.0	25.1			25.1
	DD-2	1	108		62.0		62.0
manganese	AA-10	4	<5.0	0.200	<0.500		<0.350
	CC-3	1	<0.050	1.800			1.800
	DD-2	1	<0.010		18.0		18.0
molybdenum	AA-10	4	<0.050	<0.050	<0.500		<0.275
	CC-3	1	<0.050	0.050			0.050
	DD-2	1	<0.020		<0.020		<0.020
sodium	AA-10	4	4.8	122	14.0		68
	CC-3	1	6.80	714.0			714.0
tin	AA-10	4	<0.050	<0.050	<0.500		<0.275
	CC-3	1	<0.050	1.150			1.150
	DD-2	1	<0.020		<0.020		<0.020
titanium	AA-10	4	<0.050	<0.050	1.00		<0.525
	CC-3	1	<0.050	<0.050			<0.050
	DD-2	1	<0.010		<0.010		<0.010
vanadium	AA-10	4	<0.050	<0.050	<0.500		<0.275
	CC-3	1	<0.050	<0.050			<0.050
	DD-2	1	0.026		<0.020		<0.020
yttrium	AA-10	4	<0.050	<0.050	<0.500		<0.275
	CC-3	1	<0.050	<0.050			<0.050
	DD-2	1	<0.020		<0.020		<0.020
acidity	AA-10	4	<1	<1	<1		<1
	CC-3	1	<1	<1			<1
	DD-2	1	<1		<1		<1
alkalinity	AA-10	4	270	600	740		670
	CC-3	1	2,600	3,300			3,300
	DD-2	1	274		4,000		4,000
chloride	AA-10	4	24	47	34		41
	CC-3	1	24	120			120
	DD-2	1	61		100		100

Table V-31 (Continued)

SAMPLING DATA
SAWING SPENT LUBRICANT
RAW WASTEWATER

Pollutant	Stream Code	Sample Type	Source	Concentrations (mg/l) Day 1	Day 2	Day 3	Average
chemical oxygen demand (COD)	AA-10	4	23	7,370	12,400		9,890
	DD-2	1	<0.5		25,600		25,600
fluoride	AA-10	4	0.17	0.74	1.6		1.2
	CC-3	1	0.73	0.97			0.97
	DD-2	1	0.29		0.75		0.75
ammonia nitrogen	AA-10	4	0.10	0.21	0.36		0.29
	DD-2	1	<0.01		6.2		6.2
phenols (total; by 4-AAP method)	AA-10	4	<0.005	0.11	0.048		0.079
sulfate	AA-10	4	115	150	150		150
	CC-3	1	75	1,200			1,200
	DD-2	1	180		900		900
dissolved solids	AA-10	4	530	1,910	6,800		4,360
	CC-3	1	300	14,000			14,000
	DD-2	1	670		2,600		2,600
total organic carbon (TOC)	AA-10	4	<1	670	7,700		4,190
	DD-2	1	<1		6,600		6,600
phosphate	AA-10	4	<3	<3	<3		<3
	DD-2	1	20		60		60
total solids (TS)	AA-10	4	590	6,790	36,700		21,750
	CC-3	1	204	32,300			32,300
	DD-2	1	380		21,000		21,000
Conventional							
suspended solids	AA-10	4	17	1,170	660		920
	CC-3	1	<1	495			495
	DD-2	1	1		3,200		3,200
pH (standard units)	AA-10	4	7.44	7.17	6.89		
	CC-3	1	5.35	8.93			
	DD-2	1	7.03		8.34		
oil and grease	AA-10	4	<0.5	5,100	4,200		4,650
	CC-3	1	<1	23,000			23,000
	DD-2	1	<1		6,900		6,900

*Detection limit raised due to interference.

Table V-32

FREQUENCY OF OCCURRENCE OF TOXIC POLLUTANTS
DEGREASING SPENT SOLVENTS
RAW WASTEWATER

	Pollutant	Analytical Quantification Level (mg/l)	Number of Streams Analyzed	Number of Samples Analyzed	Number of Times Observed in Samples (mg/l)			
					ND-0.010	0.011-0.100	0.101-1.000	1.000+
1.	acenaphthene	0.010	1	1	1			
2.	acrolein	0.010	1	1	1			
3.	acrylonitrile	0.010	1	1	1			
4.	benzene	0.010	1	1	1			
5.	benzidine	0.010	1	1	1			
6.	carbon tetrachloride	0.010	1	1	1			
7.	chlorobenzene	0.010	1	1	1			
8.	1,2,4-trichlorobenzene	0.010	1	1	1			
9.	hexachlorobenzene	0.010	1	1	1			
10.	1,2-dichloroethane	0.010	1	1	1			
11.	1,1,1-trichloroethane	0.010	1	1	1			
12.	hexachloroethane	0.010	1	1	1			
13.	1,1-dichloroethane	0.010	1	1	1			
14.	1,1,2-trichloroethane	0.010	1	1	1			
15.	1,1,2,2-tetrachloroethane	0.010	1	1	1			
16.	chloroethane	0.010	1	1	1			
17.	bis(chloromethyl)ether	0.010	1	1	1			
18.	bis(chloroethyl)ether	0.010	1	1	1			
19.	2-chloroethyl vinyl ether	0.010	1	1	1			
20.	2-chloronaphthalene	0.010	1	1	1			
21.	2,4,6-trichlorophenol	0.010	1	1	1			
22.	p-chloro-m-cresol	0.010	1	1	1			
23.	chloroform	0.010	1	1	1			
24.	2-chlorophenol	0.010	1	1	1			
25.	1,2-dichlorobenzene	0.010	1	1	1			
26.	1,3-dichlorobenzene	0.010	1	1	1			
27.	1,4-dichlorobenzene	0.010	1	1	1			
28.	3,3'-dichlorobenzidine	0.010	1	1	1			
29.	1,1-dichloroethylene	0.010	1	1	1			
30.	1,2-trans-dichloroethylene	0.010	1	1	1			
31.	2,4-dichlorophenol	0.010	1	1	1			
32.	1,2-dichloropropane	0.010	1	1	1			
33.	1,3-dichloropropene	0.010	1	1	1			
34.	2,4-dimethylphenol	0.010	1	1	1			
35.	2,4-dinitrotoluene	0.010	1	1	1			
36.	2,6-dinitrotoluene	0.010	1	1	1			
37.	1,2-diphenylhydrazine	0.010	1	1	1			
38.	ethylbenzene	0.010	1	1	1			
39.	fluoranthene	0.010	1	1	1			

Table V-32 (Continued)

FREQUENCY OF OCCURRENCE OF TOXIC POLLUTANTS
DEGREASING SPENT SOLVENTS
RAW WASTEWATER

Pollutant	Analytical Quantification Level (mg/l)	Number of Streams Analyzed	Number of Samples Analyzed	Number of Times Observed in Samples (mg/l) ND-0.010	0.011-0.100	0.101-1.000	1.000+
40. 4-chlorophenyl phenyl ether	0.010	1	1	1			
41. 4-bromophenyl phenyl ether	0.010	1	1	1			
42. bis(2-chloroisopropyl)ether	0.010	1	1	1			
43. bis(2-chloroethoxy)methane	0.010	1	1	1			
44. methylene chloride	0.010	1	1	1			
45. methyl chloride (chloromethane)	0.010	1	1	1			
46. methyl bromide (bromomethane)	0.010	1	1	1			
47. bromoform (tribromomethane)	0.010	1	1	1			
48. dichlorobromomethane	0.010	1	1	1			
49. trichlorofluoromethane	0.010	1	1	1			
50. dichlorodifluoromethane	0.010	1	1	1			
51. chlorodibromomethane	0.010	1	1	1			
52. hexachlorobutadiene	0.010	1	1	1			
53. hexachlorocyclopentadiene	0.010	1	1	1			
54. isophorone	0.010	1	1	1			
55. naphthalene	0.010	1	1	1			
56. nitrobenzene	0.010	1	1	1			
57. 2-nitrophenol	0.010	1	1	1			
58. 4-nitrophenol	0.010	1	1	1			
59. 2,4-dinitrophenol	0.010	1	1	1			
60. 4,6-dinitro-o-cresol	0.010	1	1	1			
61. N-nitrosodimethylamine	0.010	1	1	1			
62. N-nitrosodiphenylamine	0.010	1	1	1			
63. N-nitrosodi-n-propylamine	0.010	1	1	1			
64. pentachlorophenol	0.010	1	1	1			
65. phenol	0.010	1	1	1			
66. bis (2-ethylhexyl) phthalate	0.010	1	1	1			
67. butyl benzyl phthalate	0.010	1	1	1			
68. di-n-butyl phthalate	0.010	1	1	1			
69. di-n-octyl phthalate	0.010	1	1	1			
70. diethyl phthalate	0.010	1	1	1			
71. dimethyl phthalate	0.010	1	1	1			
72. benzo(a)anthracene	0.010	1	1	1			
73. benzo(a)pyrene	0.010	1	1	1			
74. benzo(b)fluoranthene	0.010	1	1	1			
75. benzo(k)fluoranthene	0.010	1	1	1			
76. chrysene	0.010	1	1	1			
77. acenaphthylene	0.010	1	1	1			
78. anthracene (a)	0.010	1	1	1			

Table V-32 (Continued)

FREQUENCY OF OCCURRENCE OF TOXIC POLLUTANTS
DEGREASING SPENT SOLVENTS
RAW WASTEWATER

	Pollutant	Analytical Quantification Level (mg/l)	Number of Streams Analyzed	Number of Samples Analyzed	Number of Times Observed in Samples (mg/l) ND-0.010	0.011-0.100	0.101-1.000	1.000+
79.	benzo(ghi)perylene	0.010	1	1	1			
80.	fluorene	0.010	1	1	1			
81.	phenanthrene (a)	0.010	-	-				
82.	dibenzo(a,h)anthracene	0.010	1	1	1			
83.	indeno (1,2,3-c,d)pyrene	0.010	1	1	1			
84.	pyrene	0.010	1	1	1			
85.	tetrachloroethylene	0.010	1	1				1
86.	toluene	0.010	1	1	1			
87.	trichloroethylene	0.010	1	1	1			
88.	vinyl chloride (chloroethylene)	0.010	1	1	1			
89.	aldrin	0.005	1	1	1			
90.	dieldrin	0.005	1	1	1			
91.	chlordane	0.005	1	1	1			
92.	4,4'-DDT	0.005	1	1	1			
93.	4,4'-DDE	0.005	1	1	1			
94.	4,4'-DDD	0.005	1	1	1			
95.	alpha-endosulfan	0.005	1	1	1			
96.	beta-endosulfan	0.005	1	1	1			
97.	endosulfan sulfate	0.005	1	1	1			
98.	endrin	0.005	1	1	1			
99.	endrin aldehyde	0.005	1	1	1			
100.	heptachlor	0.005	1	1	1			
101.	heptachlor epoxide	0.005	1	1	1			
102.	alpha-BHC	0.005	1	1	1			
103.	beta-BHC	0.005	1	1	1			
104.	gamma-BHC	0.005	1	1	1			
105.	delta-BHC	0.005	1	1	1			
106.	PCB-1242 (b)	0.005	1	1	1			
107.	PCB-1254 (b)	0.005	-	-				
108.	PCB-1221 (b)	0.005	-	-				
109.	PCB-1232 (b)	0.005	-	-				
110.	PCB-1248 (c)	0.005	1	1	1			
111.	PCB-1260 (c)	0.005	-	-				
112.	PCB-1016 (c)	0.005	-	-				
113.	toxaphene	0.005	1	1	1			
114.	antimony	0.100	1	1	1			
115.	arsenic	0.010	0	0	1			
116.	asbestos	10 MFL	0	0				

Table V-32 (Continued)

FREQUENCY OF OCCURRENCE OF TOXIC POLLUTANTS
DEGREASING SPENT SOLVENTS
RAW WASTEWATER

Pollutant	Analytical Quantification Level (mg/l)	Number of Streams Analyzed	Number of Samples Analyzed	Number of Times Observed in Samples (mg/l)			
				ND-0.010	0.011-0.100	0.101-1.000	1.000+
117. beryllium	0.010	1	1	1			
118. cadmium	0.002	1	1	1			
119. chromium (total)	0.005	1	1	1			
120. copper	0.009	1	1				1
121. cyanide (total)	0.010	1	1	1			
122. lead	0.020	1	1		1		
123. mercury	0.0001	1	1	1			
124. nickel	0.005	1	1	1			
125. selenium	0.01	1	1	1			
126. silver	0.02	1	1	1			
127. thallium	0.100	1	1	1			
128. zinc	0.050	1	1		1		
129. 2,3,7,8-tetrachlorodibenzo-p-dioxin	0.005	0	0				

(a), (b), (c) Reported together.

Table V-33

SAMPLING DATA
DEGREASING SPENT SOLVENTS
RAW WASTEWATER

Pollutant	Stream Code	Sample Type	Source	Concentrations (mg/l) Day 1	Day 2	Day 3	Average
Toxic Pollutants							
66. bis(2-ethylhexyl) phthalate	B-2	1	0.01	*			*
85. tetrachloroethylene	B-2	1	ND	500,000.000			500,000.000
91. chlordane	B-2	1	ND	**			**
95. alpha-endosulfan	B-2	1	ND	**			**
96. beta-endosulfan	B-2	1	ND	**			**
102. alpha-BHC	B-2	1	ND	**			**
104. gamma-BHC	B-2	1	**	**			**
120. copper	B-2	1	ND	2			2
121. cyanide	B-2	1		0.004			0.004
122. lead	B-2	1	ND	0.02			0.02
123. mercury	B-2	1	ND	0.0005			0.0005
128. zinc	B-2	1	ND	0.06			0.06
Nonconventional							
aluminum	B-2	1		0.1			0.1
calcium	B-2	1		<5			<5
chemical oxygen demand (COD)	B-2	1		330			330
magnesium	B-2	1		<0.1			<0.1
phenols (total; by 4-AAP method)	B-2	1		0.072			0.072
total organic carbon (TOC)	B-2	1	35	143			143
Conventional							
oil and grease	B-2	1		2,180			2,180
suspended solids	B-2	1	138	23			23

Table V-34

ANNEALING ATMOSPHERE SCRUBBER LIQUOR

Plant	Water Use l/kkg	Water Use gal/ton	Percent Recycle	Wastewater l/kkg	Wastewater gal/ton
1	6,171	1,480	99.6	26.35	6.320

Table V-35

FREQUENCY OF OCCURRENCE OF TOXIC POLLUTANTS
ANNEALING ATMOSPHERE SCRUBBER LIQUOR
RAW WASTEWATER

	Pollutant	Analytical Quantification Level (mg/l)	Number of Streams Analyzed	Number of Samples Analyzed	Number of Times Observed in Samples (mg/l)			
					ND-0.010	0.011-0.100	0.101-1.000	1.000+
1.	acenaphthene	0.010	1	1	1			
2.	acrolein	0.010	1	1	1			
3.	acrylonitrile	0.010	1	1	1			
4.	benzene	0.010	1	1	1			
5.	benzidine	0.010	1	1	1			
6.	carbon tetrachloride	0.010	1	1	1			
7.	chlorobenzene	0.010	1	1	1			
8.	1,2,4-trichlorobenzene	0.010	1	1	1			
9.	hexachlorobenzene	0.010	1	1	1			
10.	1,2-dichloroethane	0.010	1	1	1			
11.	1,1,1-trichloroethane	0.010	1	1	1			
12.	hexachloroethane	0.010	1	1	1			
13.	1,1-dichloroethane	0.010	1	1	1			
14.	1,1,2-trichloroethane	0.010	1	1	1			
15.	1,1,2,2-tetrachloroethane	0.010	1	1	1			
16.	chloroethane	0.010	1	1	1			
17.	bis(chloromethyl)ether	0.010	1	1	1			
18.	bis(chloroethyl)ether	0.010	1	1	1			
19.	2-chloroethyl vinyl ether	0.010	1	1	1			
20.	2-chloronaphthalene	0.010	1	1	1			
21.	2,4,6-trichlorophenol	0.010	1	1	1			
22.	p-chloro-m-cresol	0.010	1	1	1			
23.	chloroform	0.010	1	1	1			
24.	2-chlorophenol	0.010	1	1	1			
25.	1,2-dichlorobenzene	0.010	1	1	1			
26.	1,3-dichlorobenzene	0.010	1	1	1			
27.	1,4-dichlorobenzene	0.010	1	1	1			
28.	3,3'-dichlorobenzidine	0.010	1	1	1			
29.	1,1-dichloroethylene	0.010	1	1	1			
30.	1,2-trans-dichloroethylene	0.010	1	1	1			
31.	2,4-dichlorophenol	0.010	1	1	1			
32.	1,2-dichloropropane	0.010	1	1	1			
33.	1,3-dichloropropene	0.010	1	1	1			
34.	2,4-dimethylphenol	0.010	1	1	1			
35.	2,4-dinitrotoluene	0.010	1	1	1			
36.	2,6-dinitrotoluene	0.010	1	1	1			
37.	1,2-diphenylhydrazine	0.010	1	1	1			
38.	ethylbenzene	0.010	1	1	1			
39.	fluoranthene	0.010	1	1	1			

Table V-35 (Continued)

FREQUENCY OF OCCURRENCE OF TOXIC POLLUTANTS
ANNEALING ATMOSPHERE SCRUBBER LIQUOR
RAW WASTEWATER

	Pollutant	Analytical Quantification Level (mg/l)	Number of Streams Analyzed	Number of Samples Analyzed	Number of Times Observed in Samples (mg/l) ND-0.010	0.011-0.100	0.101-1.000	1.000+
40.	4-chlorophenyl phenyl ether	0.010	1	1	1			
41.	4-bromophenyl phenyl ether	0.010	1	1	1			
42.	bis(2-chloroisopropyl)ether	0.010	1	1	1			
43.	bis(2-chloroethoxy)methane	0.010	1	1	1			
44.	methylene chloride	0.010	1	1	1			
45.	methyl chloride (chloromethane)	0.010	1	1	1			
46.	methyl bromide (bromomethane)	0.010	1	1	1			
47.	bromoform (tribromomethane)	0.010	1	1	1			
48.	dichlorobromomethane	0.010	1	1	1			
49.	trichlorofluoromethane	0.010	1	1	1			
50.	dichlorodifluoromethane	0.010	1	1	1			
51.	chlorodibromomethane	0.010	1	1	1			
52.	hexachlorobutadiene	0.010	1	1	1			
53.	hexachlorocyclopentadiene	0.010	1	1	1			
54.	isophorone	0.010	1	1	1			
55.	naphthalene	0.010	1	1	1			
56.	nitrobenzene	0.010	1	1	1			
57.	2-nitrophenol	0.010	1	1	1			
58.	4-nitrophenol	0.010	1	1	1			
59.	2,4-dinitrophenol	0.010	1	1	1			
60.	4,6-dinitro-o-cresol	0.010	1	1	1			
61.	N-nitrosodimethylamine	0.010	1	1	1			
62.	N-nitrosodiphenylamine	0.010	1	1	1			
63.	N-nitrosodi-n-propylamine	0.010	1	1	1			
64.	pentachlorophenol	0.010	1	1	1			
65.	phenol	0.010	1	1	1			
66.	bis (2-ethylhexyl) phthalate	0.010	1	1	1			
67.	butyl benzyl phthalate	0.010	1	1	1			
68.	di-n-butyl phthalate	0.010	1	1	1			
69.	di-n-octyl phthalate	0.010	1	1	1			
70.	diethyl phthalate	0.010	1	1	1			
71.	dimethyl phthalate	0.010	1	1	1			
72.	benzo(a)anthracene	0.010	1	1	1			
73.	benzo(a)pyrene	0.010	1	1	1			
74.	benzo(b)fluoranthene	0.010	1	1	1			
75.	benzo(k)fluoranthene	0.010	1	1	1			
76.	chrysene	0.010	1	1	1			
77.	acenaphthylene	0.010	1	1	1			
78.	anthracene (a)	0.010	1	1	1			

Table V-35 (Continued)

FREQUENCY OF OCCURRENCE OF TOXIC POLLUTANTS
ANNEALING ATMOSPHERE SCRUBBER LIQUOR
RAW WASTEWATER

	Pollutant	Analytical Quantification Level (mg/l)	Number of Streams Analyzed	Number of Samples Analyzed	Number of Times Observed in Samples (mg/l) ND-0.010	0.011-0.100	0.101-1.000	1.000+
79.	benzo(ghi)perylene	0.010	1	1	1			
80.	fluorene	0.010	1	1	1			
81.	phenanthrene (a)	0.010	-	-				
82.	dibenzo(a,h)anthracene	0.010	1	1	1			
83.	indeno (1,2,3-c,d)pyrene	0.010	1	1	1			
84.	pyrene	0.010	1	1	1			
85.	tetrachloroethylene	0.010	1	1	1			
86.	toluene	0.010	1	1	1			
87.	trichloroethylene	0.010	1	1	1			
88.	vinyl chloride (chloroethylene)	0.010	1	1	1			
89.	aldrin	0.005	1	1	1			
90.	dieldrin	0.005	1	1	1			
91.	chlordane	0.005	1	1	1			
92.	4,4'-DDT	0.005	1	1	1			
93.	4,4'-DDE	0.005	1	1	1			
94.	4,4'-DDD	0.005	1	1	1			
95.	alpha-endosulfan	0.005	1	1	1			
96.	beta-endosulfan	0.005	1	1	1			
97.	endosulfan sulfate	0.005	1	1	1			
98.	endrin	0.005	1	1	1			
99.	endrin aldehyde	0.005	1	1	1			
100.	heptachlor	0.005	1	1	1			
101.	heptachlor epoxide	0.005	1	1	1			
102.	alpha-BHC	0.005	1	1	1			
103.	beta-BHC	0.005	1	1	1			
104.	gamma-BHC	0.005	1	1	1			
105.	delta-BHC	0.005	1	1	1			
106.	PCB-1242 (b)	0.005	1	1	1			
107.	PCB-1254 (b)	0.005	-	-				
108.	PCB-1221 (b)	0.005	-	-				
109.	PCB-1232 (b)	0.005	-	-				
110.	PCB-1248 (c)	0.005	1	1	1			
111.	PCB-1260 (c)	0.005	-	-				
112.	PCB-1016 (c)	0.005	-	-				
113.	toxaphene	0.005	1	1	1			
114.	antimony	0.100	0	0				
115.	arsenic	0.010	1	1	1			
116.	asbestos	10 MFL	0	0				

Table V-35 (Continued)

FREQUENCY OF OCCURRENCE OF TOXIC POLLUTANTS
ANNEALING ATMOSPHERE SCRUBBER LIQUOR
RAW WASTEWATER

Pollutant	Analytical Quantification Level (mg/l)	Number of Streams Analyzed	Number of Samples Analyzed	Number of Times Observed in Samples (mg/l) ND-0.010	0.011-0.100	0.101-1.000	1.000+
117. beryllium	0.010	1	1	1			
118. cadmium	0.002	1	1	1			
119. chromium (total)	0.005	1	1		1		
120. copper	0.009	1	1		1		
121. cyanide (total)	0.010	1	1	1			
122. lead	0.020	1	1		1		
123. mercury	0.0001	1	1	1			
124. nickel	0.005	1	1	1			
125. selenium	0.01	1	1	1			
126. silver	0.02	1	1	1			
127. thallium	0.100	1	1	1			
128. zinc	0.050	1	1			1	
129. 2,3,7,8-tetrachlorodibenzo-p-dioxin	0.005	0	0				

(a), (b), (c) Reported together.

Table V-36

SAMPLING DATA
ANNEALING ATMOSPHERE SCRUBBER LIQUOR
RAW WASTEWATER

Pollutant	Stream Code	Sample Type	Source	Concentrations (mg/l) Day 1	Day 2	Day 3	Average
Toxic Pollutants							
119. chromium	N-7	1	<0.001	0.016			0.016
120. copper	N-7	1	0.008	0.021			0.021
122. lead	N-7	1	0.010	0.016			0.016
123. mercury	N-7	1	0.0091	0.0087			0.0087
128. zinc	N-7	1	<0.010	0.220			0.220
Nonconventional							
alkalinity	N-7	1		110			110
aluminum	N-7	1	<0.5	<0.5			<0.5
calcium	N-7	1	28	76			76
chemical oxygen demand (COD)	N-7	1	5	18			18
dissolved solids	N-7	1		18			18
magnesium	N-7	1	4.39	11.41			11.41
phenols (total; by 4-AAP method)	N-7	1		0.008			0.008
total organic carbon (TOC)	N-7	1	2.7	7			7
Conventional							
suspended solids	N-7	1	<0.002	4			4
pH (standard units)	N-7	1	7.1	6.2			

Table V-37

ROLLING SOLUTION HEAT TREATMENT CONTACT COOLING WATER

Plant	Water Use l/kkg	Water Use gal/ton	Percent Recycle	Wastewater l/kkg	Wastewater gal/ton
1	*	*	100	0	0
2	41.59	9.974	100	0	0
3	67.54	16.20	0	20.01	4.800
4	*	*	*	1,478	354.4
5	2,110	506.0	0	2,110	506.0
6	2,585	620.0	0	2,585	620.0
7	*	*	0	*	*
8	*	*	0	*	*
9	52,950	12,700	*	*	*
10	145,100	34,800	*	*	*
Statistical Summary					
Minimum	41.59	9.974		0	0
Maximum	145,100	34,800		2,585	620.0
Mean	33,810	8,109		1,032	247.5
Median	2,347	563.0		748.8	179.6
Sample:	6 of 9 plants			6 of 9 plants	
Nonzero Mean	33,810	8,109		1,548	371.3
Sample:	6 of 9 plants			4 of 9 plants	

Note: This table includes data from one plant which discharges from two rolling heat treatment operations.

Table V-38

FREQUENCY OF OCCURRENCE OF TOXIC POLLUTANTS
ROLLING SOLUTION HEAT TREATMENT CONTACT COOLING WATER
RAW WASTEWATER

	Pollutant	Analytical Quantification Level (mg/l)	Number of Streams Analyzed	Number of Samples Analyzed	Number of Times Observed in Samples (mg/l)			
					ND-0.010	0.011-0.100	0.101-1.000	1.000+
1.	acenaphthene	0.010	3	5	5			
2.	acrolein	0.010	3	9	9			
3.	acrylonitrile	0.010	3	9	9			
4.	benzene	0.010	3	9	9			
5.	benzidine	0.010	3	5	5			
6.	carbon tetrachloride	0.010	3	9	9			
7.	chlorobenzene	0.010	3	9	9			
8.	1,2,4-trichlorobenzene	0.010	3	5	5			
9.	hexachlorobenzene	0.010	3	5	5			
10.	1,2-dichloroethane	0.010	3	9	9			
11.	1,1,1-trichloroethane	0.010	3	9	8	1		
12.	hexachloroethane	0.010	3	5	5			
13.	1,1-dichloroethane	0.010	3	9	9			
14.	1,1,2-trichloroethane	0.010	3	9	9			
15.	1,1,2,2-tetrachloroethane	0.010	3	9	9			
16.	chloroethane	0.010	3	9	9			
17.	bis(chloromethyl)ether	0.010	3	9	9			
18.	bis(chloroethyl)ether	0.010	3	5	5			
19.	2-chloroethyl vinyl ether	0.010	3	9	9			
20.	2-chloronaphthalene	0.010	3	5	5			
21.	2,4,6-trichlorophenol	0.010	3	5	5			
22.	p-chloro-m-cresol	0.010	3	5	5			
23.	chloroform	0.010	3	9	7	2		
24.	2-chlorophenol	0.010	3	5	5			
25.	1,2-dichlorobenzene	0.010	3	5	5			
26.	1,3-dichlorobenzene	0.010	3	5	5			
27.	1,4-dichlorobenzene	0.010	3	5	5			
28.	3,3'-dichlorobenzidine	0.010	3	5	5			
29.	1,1-dichloroethylene	0.010	3	9	9			
30.	1,2-trans-dichloroethylene	0.010	3	9	9			
31.	2,4-dichlorophenol	0.010	3	5	5			
32.	1,2-dichloropropane	0.010	3	9	9			
33.	1,3-dichloropropene	0.010	3	9	9			
34.	2,4-dimethylphenol	0.010	3	5	5			
35.	2,4-dinitrotoluene	0.010	3	5	5			
36.	2,6-dinitrotoluene	0.010	3	5	5			
37.	1,2-diphenylhydrazine	0.010	3	5	5			
38.	ethylbenzene	0.010	3	9	9			
39.	fluoranthene	0.010	3	5	5			

Table V-38 (Continued)

FREQUENCY OF OCCURRENCE OF TOXIC POLLUTANTS
ROLLING SOLUTION HEAT TREATMENT CONTACT COOLING WATER
RAW WASTEWATER

	Pollutant	Analytical Quantification Level (mg/l)	Number of Streams Analyzed	Number of Samples Analyzed	Number of Times Observed in Samples (mg/l) ND-0.010	0.011-0.100	0.101-1.000	1.000+
40.	4-chlorophenyl phenyl ether	0.010	3	5	5			
41.	4-bromophenyl phenyl ether	0.010	3	5	5			
42.	bis(2-chloroisopropyl)ether	0.010	3	5	5			
43.	bis(2-chloroethoxy)methane	0.010	3	5	5			
44.	methylene chloride	0.010	3	9	6	1	2	
45.	methyl chloride (chloromethane)	0.010	3	9	9			
46.	methyl bromide (bromomethane)	0.010	3	9	9			
47.	bromoform (tribromomethane)	0.010	3	9	9			
48.	dichlorobromomethane	0.010	3	9	9			
49.	trichlorofluoromethane	0.010	3	9	9			
50.	dichlorodifluoromethane	0.010	3	9	9			
51.	chlorodibromomethane	0.010	3	9	9			
52.	hexachlorobutadiene	0.010	3	5	5			
53.	hexachlorocyclopentadiene	0.010	3	5	5			
54.	isophorone	0.010	3	5	5			
55.	naphthalene	0.010	3	5	5			
56.	nitrobenzene	0.010	3	5	5			
57.	2-nitrophenol	0.010	3	5	5			
58.	4-nitrophenol	0.010	3	5	5			
59.	2,4-dinitrophenol	0.010	3	5	5			
60.	4,6-dinitro-o-cresol	0.010	3	5	5			
61.	N-nitrosodimethylamine	0.010	3	5	5			
62.	N-nitrosodiphenylamine	0.010	3	5	5			
63.	N-nitrosodi-n-propylamine	0.010	3	5	5			
64.	pentachlorophenol	0.010	3	5	5			
65.	phenol	0.010	3	5	5			
66.	bis (2-ethylhexyl) phthalate	0.010	3	5	5			
67.	butyl benzyl phthalate	0.010	3	5	5			
68.	di-n-butyl phthalate	0.010	3	5	4	1		
69.	di-n-octyl phthalate	0.010	3	5	5			
70.	diethyl phthalate	0.010	3	5	5			0
71.	dimethyl phthalate	0.010	3	5	5			
72.	benzo(a)anthracene	0.010	3	5	5			
73.	benzo(a)pyrene	0.010	3	5	5			
74.	benzo(b)fluoranthene	0.010	3	5	5			
75.	benzo(k)fluoranthene	0.010	3	5	5			
76.	chrysene	0.010	3	5	5			
77.	acenaphthylene	0.010	3	5	5			
78.	anthracene (a)	0.010	3	5	5			

Table V-38 (Continued)

FREQUENCY OF OCCURRENCE OF TOXIC POLLUTANTS
ROLLING SOLUTION HEAT TREATMENT CONTACT COOLING WATER
RAW WASTEWATER

	Pollutant	Analytical Quantification Level (mg/l)	Number of Streams Analyzed	Number of Samples Analyzed	Number of Times Observed in Samples (mg/l)			
					ND-0.010	0.011-0.100	0.101-1.000	1.000+
79.	benzo(ghi)perylene	0.010	3	5	5			
80.	fluorene	0.010	3	5	5			
81.	phenanthrene (a)	0.010	-	-				
82.	dibenzo(a,h)anthracene	0.010	3	5	5			
83.	indeno (1,2,3-c,d)pyrene	0.010	3	5	5			
84.	pyrene	0.010	3	5	5			
85.	tetrachloroethylene	0.010	3	9	8	1		
86.	toluene	0.010	3	9	9			
87.	trichloroethylene	0.010	3	9	9			
88.	vinyl chloride (chloroethylene)	0.010	3	9	9			
89.	aldrin	0.005	3	5	5			
90.	dieldrin	0.005	3	5	5			
91.	chlordane	0.005	3	5	5			
92.	4,4'-DDT	0.005	3	5	5			
93.	4,4'-DDE	0.005	3	5	5			
94.	4,4'-DDD	0.005	3	5	5			
95.	alpha-endosulfan	0.005	3	5	5			
96.	beta-endosulfan	0.005	3	5	5			
97.	endosulfan sulfate	0.005	3	5	5			
98.	endrin	0.005	3	5	5			
99.	endrin aldehyde	0.005	3	5	5			
100.	heptachlor	0.005	3	5	5			
101.	heptachlor epoxide	0.005	3	5	5			
102.	alpha-BHC	0.005	3	5	5			
103.	beta-BHC	0.005	3	5	5			
104.	gamma-BHC	0.005	3	5	5			
105.	delta-BHC	0.005	3	5	5			
106.	PCB-1242 (b)	0.005	3	5	5			
107.	PCB-1254 (b)	0.005	-	-				
108.	PCB-1221 (b)	0.005	-	-				
109.	PCB-1232 (b)	0.005	-	-				
110.	PCB-1248 (c)	0.005	3	5	5			
111.	PCB-1260 (c)	0.005	-	-				
112.	PCB-1016 (c)	0.005	-	-				
113.	toxaphene	0.005	3	5	5			
114.	antimony	0.100	3	5	5			
115.	arsenic	0.010	3	5	2	3		
116.	asbestos	10 MFL	0	0				

Table V-38 (Continued)

FREQUENCY OF OCCURRENCE OF TOXIC POLLUTANTS
ROLLING SOLUTION HEAT TREATMENT CONTACT COOLING WATER
RAW WASTEWATER

Pollutant	Analytical Quantification Level (mg/l)	Number of Streams Analyzed	Number of Samples Analyzed	Number of Times Observed in Samples (mg/l)			
				ND-0.010	0.011-0.100	0.101-1.000	1.000+
117. beryllium	0.010	3	5	5			
118. cadmium	0.002	3	5	5			
119. chromium (total)	0.005	3	5	4	1		
120. copper	0.009	3	5	2	2	1	
121. cyanide (total)	0.010	3	5	5			
122. lead	0.020	3	5	1	2	1	1
123. mercury	0.0001	3	5	5			
124. nickel	0.005	3	5	3	2		
125. selenium	0.01	3	5	5			
126. silver	0.02	3	5	4		1	
127. thallium	0.100	3	5	5			
128. zinc	0.050	3	5	4		1	
129. 2,3,7,8-tetrachlorodibenzo-p-dioxin	0.005	0	0				

(a), (b), (c) Reported together.

Table V-39

SAMPLING DATA
ROLLING SOLUTION HEAT TREATMENT CONTACT COOLING WATER
RAW WASTEWATER

Pollutant	Stream Code	Sample Type	Source	Concentrations (mg/l) Day 1	Day 2	Day 3	Average
Toxic Pollutants							
4. benzene	D-10	1	ND	ND	ND	ND	
	D-11	1	ND	ND	ND	*	*
	U-5	1	*	*	ND	ND	*
11. 1,1,1-trichloroethane	D-10	1	ND	ND	ND	ND	
	D-11	1	ND	0.039	*	*	0.014
	U-5	1	*	ND	ND	ND	
23. chloroform	D-10	1	0.020	*	*	*	*
	D-11	1	0.020	0.038	*	0.012	0.020
	U-5	1	*	ND	ND	ND	
44. methylene chloride	D-10	1	*	*	*	0.110	0.037
	D-11	1	*	*	*	0.095	0.035
	U-5	1	*	0.400	*	*	0.133
48. dichlorobromomethane	D-10	1	*	ND	ND	ND	
	D-11	1	*	ND	*	*	*
	U-5	1	*	ND	ND	ND	
66. bis(2-ethylhexyl) phthalate	D-10	6	*	ND			
	D-11	6	*	*			*
	U-5	3	*	*	*	*	*
68. di-n-butyl phthalate	D-10	6	*	0.015			0.015
	D-11	6	*	*			*
	U-5	3	*	*	ND	*	*
69. di-n-octyl phthalate	D-10	6	ND	ND			
	D-11	6	ND	ND			
	U-5	3	ND	ND	*	ND	*
70. diethyl phthalate	D-10	6	ND	*			*
	D-11	6	ND	*			*
	U-5	3	*	*	*	*	*
85. tetrachloroethylene	D-10	1	ND	ND	ND	ND	
	D-11	1	ND	0.011	ND	*	*
	U-5	1	ND	ND	ND	ND	
87. trichloroethylene	D-10	1	*	ND	ND	ND	
	D-11	1	*	*	ND	*	*
	U-5	1	ND	ND	ND	ND	

Table V-39 (Continued)

SAMPLING DATA
ROLLING SOLUTION HEAT TREATMENT CONTACT COOLING WATER
RAW WASTEWATER

Pollutant	Stream Code	Sample Type	Source	Concentrations (mg/l) Day 1	Day 2	Day 3	Average
115. arsenic	D-10	6	<0.010	<0.010			<0.010
	D-11	6	<0.010	<0.010			<0.010
	U-5	3	<0.002	0.028	0.032	0.032	0.031
118. cadmium	D-10	6	<0.002	<0.001			<0.001
	D-11	6	<0.002	<0.001			<0.001
	U-5	3	0.002	0.002	0.002	0.002	0.002
119. chromium	D-10	6	<0.005	0.007			0.007
	D-11	6	<0.005	0.006			0.006
	U-5	3	<0.001	0.059	0.008	0.009	0.025
120. copper	D-10	6	<0.009	0.010			0.010
	D-11	6	<0.009	<0.009			<0.009
	U-5	3	0.013	0.160	0.026	0.026	0.071
121. cyanide	D-10	1		0.002			0.002
	D-11	1		<0.001			<0.001
	U-5	1		<0.02	<0.02	<0.02	<0.02
122. lead	D-10	6	<0.020	<0.020			<0.020
	D-11	6	<0.020	0.030			0.030
	U-5	3	0.010	0.380	1.740	0.018	0.713
123. mercury	D-10	6	0.0006	0.0005			0.0005
	D-11	6	0.0006	0.0004			0.0004
	U-5	3	0.005	0.002	0.003	0.003	0.003
124. nickel	D-10	6	<0.005	<0.005			<0.005
	D-11	6	<0.005	0.020			0.020
	U-5	3	0.016	0.006	0.016	0.007	0.010
126. silver	D-10	6	<0.020	<0.020			<0.020
	D-11	6	<0.020	<0.020			<0.020
	U-5	3	ND	0.118	ND	ND	0.118
128. zinc	D-10	6	<0.050	<0.050			<0.050
	D-11	6	<0.050	<0.050			<0.050
	U-5	3	<0.010	0.190	<0.010	<0.010	<0.070
Nonconventional							
alkalinity	D-10	6	ND	130			130
	D-11	6	ND	120			120
	U-5	3	ND		220	220	220

Table V-39 (Continued)

SAMPLING DATA
ROLLING SOLUTION HEAT TREATMENT CONTACT COOLING WATER
RAW WASTEWATER

Pollutant	Stream Code	Sample Type	Source	Concentrations (mg/l) Day 1	Day 2	Day 3	Average
aluminum	D-10	6	0.2	0.4			0.4
	D-11	6	0.2	<0.2			<0.2
	U-5	3	<0.1	<0.1	<0.1	<0.1	<0.1
calcium	D-10	6	38	51			51
	D-11	6	38	41			41
	U-5	3	58.7	93.4	90.3	85.4	89.7
chemical oxygen demand (COD)	D-10	6	ND	<5			<5
	D-11	6	ND	7			7
	U-5	3	ND	<5	11	11	<9
dissolved solids	D-10	6	ND	412			412
	D-11	6	ND	334			334
	U-5	3	ND	610	580	550	580
magnesium	D-10	6	12	20			20
	D-11	6	12	11			11
	U-5	3	7.44	18.9	20.8	21.1	20.3
phenols (total; by 4-AAP method)	D-10	6	ND	0.011			0.011
	D-11	6	ND	0.01			0.01
	U-5	1	ND	0.009	0.006	0.009	0.008
sulfate	D-10	6	ND	70			70
	D-11	6	ND	<10			<10
	U-5	3	ND		110	110	110
total organic carbon (TOC)	D-10	6	ND	2			2
	D-11	6	ND	<1			<1
	U-5	3	ND	3.8	3.5	3.4	3.6
Conventional							
oil and grease	D-10	1	ND	13			13
	D-11	1	ND	12			12
	U-5	1	ND	<5	<5	6	<5
suspended solids	D-10	6	ND	2			2
	D-11	6	ND	3			3
	U-5	3	ND	37	2	4.6	15
pH (standard units)	D-10	1		7.1	6.8	7.4	
	D-11	1		8.1	8.2	7.5	
	U-5	1			7		

Table V-40

EXTRUSION PRESS HEAT TREATMENT CONTACT COOLING WATER

Plant	Water Use l/kkg	Water Use gal/ton	Percent Recycle	Wastewater l/kkg	Wastewater gal/ton
1	*	*	100	0	0
2	*	*	100	0	0
3	1,924	461.5	100	0	0
4	76.30	18.30	0	65.46	15.70
5	80.05	19.20	0	68.80	16.50
6	833.9	200.0	0	81.35	19.51
7	113.0	27.10	0	96.73	23.20
8	116.7	28.00	0	100.1	24.00
9	433.6	104.0	0	433.6	104.0
10	554.5	133.0	0	554.5	133.0
11	*	*	*	1,057	253.4
12	*	*	0	1,447	347.0
13	1,768	424.0	0	1,768	424.0
14	26,600	6,380	92	2,218	532.0
15†	2,522	605.0	0	2,522	605.0
16	2,668	640.0	0	2,668	640.0
17	2,831	679.0	0	2,831	679.0
18	3,185	764.0	0	3,185	764.0
19	*	*	0	3,536	848.0
20	5,670	1,360	*	5,670	1,360
21	10,760	2,580	0	10,760	2,580
22	16,700	4,076	0	16,700	4,076
23	21,890	5,250	0	21,890	5,250
24	25,850	6,200	0	25,850	6,200
25	28,690	6,880	0	28,690	6,880
26	*	*	*	*	*
27	*	*	0	*	*
28	*	*	*	*	*
29	*	*	*	*	*
30	*	*	0	*	*

*Data not available.
†Combination of two presses.

Statistical Summary

Minimum	76.30	18.30	0	0
Maximum	28,690	6,880	28,690	6,880
Mean	7,676	1,841	5,299	1,271
Median	2,596	622.5	1,768	424.0
Sample:	20 of 29 plants		25 of 29 plants	
Nonzero Mean	7,676	1,841	6,021	1,444
Sample:	20 of 29 plants		22 of 29 plants	

Note: This table includes data from one plant which discharges from two extrusion press heat treatment operations.

Table V-41

FREQUENCY OF OCCURRENCE OF TOXIC POLLUTANTS
EXTRUSION PRESS HEAT TREATMENT CONTACT COOLING WATER
RAW WASTEWATER

	Pollutant	Analytical Quantification Level (mg/l)	Number of Streams Analyzed	Number of Samples Analyzed	Number of Times Observed in Samples (mg/l)			
					ND-0.010	0.011-0.100	0.101-1.000	1.000+
1.	acenaphthene	0.010	6	8	8			
2.	acrolein	0.010	6	9	9			
3.	acrylonitrile	0.010	6	9	9			
4.	benzene	0.010	6	9	8	1		
5.	benzidine	0.010	6	8	8			
6.	carbon tetrachloride	0.010	6	9	9			
7.	chlorobenzene	0.010	6	9	9			
8.	1,2,4-trichlorobenzene	0.010	6	8	8			
9.	hexachlorobenzene	0.010	6	8	8			
10.	1,2-dichloroethane	0.010	6	9	9			
11.	1,1,1-trichloroethane	0.010	6	9	9			
12.	hexachloroethane	0.010	6	8	8			
13.	1,1-dichloroethane	0.010	6	9	9			
14.	1,1,2-trichloroethane	0.010	6	9	9			
15.	1,1,2,2-tetrachloroethane	0.010	6	9	9			
16.	chloroethane	0.010	6	9	9			
17.	bis(chloromethyl)ether	0.010	6	9	9			
18.	bis(chloroethyl)ether	0.010	6	8	8			
19.	2-chloroethyl vinyl ether	0.010	6	9	9			
20.	2-chloronaphthalene	0.010	6	8	8			
21.	2,4,6-trichlorophenol	0.010	6	8	8			
22.	p-chloro-m-cresol	0.010	6	8	8			
23.	chloroform	0.010	6	9	5	4		
24.	2-chlorophenol	0.010	6	8	7	1		
25.	1,2-dichlorobenzene	0.010	6	8	8			
26.	1,3-dichlorobenzene	0.010	6	8	8			
27.	1,4-dichlorobenzene	0.010	6	8	8			
28.	3,3'-dichlorobenzidine	0.010	6	8	8			
29.	1,1-dichloroethylene	0.010	6	9	9			
30.	1,2-trans-dichloroethylene	0.010	6	9	8	1		
31.	2,4-dichlorophenol	0.010	6	8	8			
32.	1,2-dichloropropane	0.010	6	9	9			
33.	1,3-dichloropropene	0.010	6	9	9			
34.	2,4-dimethylphenol	0.010	6	8	8			
35.	2,4-dinitrotoluene	0.010	6	8	8			
36.	2,6-dinitrotoluene	0.010	6	8	8			
37.	1,2-diphenylhydrazine	0.010	6	8	8			
38.	ethylbenzene	0.010	6	9	9			
39.	fluoranthene	0.010	6	8	8			

Table V-41 (Continued)

FREQUENCY OF OCCURRENCE OF TOXIC POLLUTANTS
EXTRUSION PRESS HEAT TREATMENT CONTACT COOLING WATER
RAW WASTEWATER

	Pollutant	Analytical Quantification Level (mg/l)	Number of Streams Analyzed	Number of Samples Analyzed	Number of Times Observed in Samples (mg/l) ND-0.010	0.011-0.100	0.101-1.000	1.000+
40.	4-chlorophenyl phenyl ether	0.010	6	8	8			
41.	4-bromophenyl phenyl ether	0.010	6	8	8			
42.	bis(2-chloroisopropyl)ether	0.010	6	8	8			
43.	bis(2-chloroethoxy)methane	0.010	6	8	8			
44.	methylene chloride	0.010	6	9	3	3	3	
45.	methyl chloride (chloromethane)	0.010	6	9	9			
46.	methyl bromide (bromomethane)	0.010	6	9	9			
47.	bromoform (tribromomethane)	0.010	6	9	9			
48.	dichlorobromomethane	0.010	6	9	9			
49.	trichlorofluoromethane	0.010	6	9	9			
50.	dichlorodifluoromethane	0.010	6	9	9			
51.	chlorodibromomethane	0.010	6	9	9			
52.	hexachlorobutadiene	0.010	6	8	8			
53.	hexachlorocyclopentadiene	0.010	6	8	8			
54.	isophorone	0.010	6	8	8			
55.	naphthalene	0.010	6	8	8			
56.	nitrobenzene	0.010	6	8	8			
57.	2-nitrophenol	0.010	6	8	8			
58.	4-nitrophenol	0.010	6	8	7	1		
59.	2,4-dinitrophenol	0.010	6	8	8			
60.	4,6-dinitro-o-cresol	0.010	6	8	8			
61.	N-nitrosodimethylamine	0.010	6	8	8			
62.	N-nitrosodiphenylamine	0.010	6	8	8			
63.	N-nitrosodi-n-propylamine	0.010	6	8	8			
64.	pentachlorophenol	0.010	6	8	8			
65.	phenol	0.010	6	8	7			1
66.	bis (2-ethylhexyl) phthalate	0.010	6	8	4	3	1	
67.	butyl benzyl phthalate	0.010	6	8	5	2	1	
68.	di-n-butyl phthalate	0.010	6	8	5	3		
69.	di-n-octyl phthalate	0.010	6	8	7	1		
70.	diethyl phthalate	0.010	6	8	8			
71.	dimethyl phthalate	0.010	6	8	8			
72.	benzo(a)anthracene	0.010	6	8	8			
73.	benzo(a)pyrene	0.010	6	8	8			
74.	benzo(b)fluoranthene	0.010	6	8	8			
75.	benzo(k)fluoranthene	0.010	6	8	8			
76.	chrysene	0.010	6	8	8			
77.	acenaphthylene	0.010	6	8	8			
78.	anthracene (a)	0.010	6	8	8			

Table V-41 (Continued)

FREQUENCY OF OCCURRENCE OF TOXIC POLLUTANTS
EXTRUSION PRESS HEAT TREATMENT CONTACT COOLING WATER
RAW WASTEWATER

	Pollutant	Analytical Quantification Level (mg/l)	Number of Streams Analyzed	Number of Samples Analyzed	Number of Times Observed in Samples (mg/l) ND-0.010	0.011-0.100	0.101-1.000	1.000+
79.	benzo(ghi)perylene	0.010	6	8	8			
80.	fluorene	0.010	6	8	8			
81.	phenanthrene (a)	0.010	-	-				
82.	dibenzo(a,h)anthracene	0.010	6	8	8			
83.	indeno (1,2,3-c,d)pyrene	0.010	6	8	8			
84.	pyrene	0.010	6	8	8			
85.	tetrachloroethylene	0.010	6	9	9			
86.	toluene	0.010	6	9	9			
87.	trichloroethylene	0.010	6	9	9			
88.	vinyl chloride (chloroethylene)	0.010	6	9	9			
89.	aldrin	0.005	6	8	8			
90.	dieldrin	0.005	6	8	8			
91.	chlordane	0.005	6	8	7	1		
92.	4,4'-DDT	0.005	6	8	8			
93.	4,4'-DDE	0.005	6	8	8			
94.	4,4'-DDD	0.005	6	8	8			
95.	alpha-endosulfan	0.005	6	8	7		1	
96.	beta-endosulfan	0.005	6	8	7		1	
97.	endosulfan sulfate	0.005	6	8	7		1	
98.	endrin	0.005	6	8	7		1	
99.	endrin aldehyde	0.005	6	8	7	1		
100.	heptachlor	0.005	6	8	7		1	
101.	heptachlor epoxide	0.005	6	8	6	2		
102.	alpha-BHC	0.005	6	8	8			
103.	beta-BHC	0.005	6	8	8			
104.	gamma-BHC	0.005	6	8	8			
105.	delta-BHC	0.005	6	8	8			
106.	PCB-1242 (b)	0.005	6	8	8			
107.	PCB-1254 (b)	0.005	-	-				
108.	PCB-1221 (b)	0.005	-	-				
109.	PCB-1232 (b)	0.005	-	-				
110.	PCB-1248 (c)	0.005	6	8	8			
111.	PCB-1260 (c)	0.005	-	-				
112.	PCB-1016 (c)	0.005	-	-				
113.	toxaphene	0.005	6	8	8			
114.	antimony	0.100	6	8	8			
115.	arsenic	0.010	6	8	8			
116.	asbestos	10 MFL	0	0				

Table V-41 (Continued)

FREQUENCY OF OCCURRENCE OF TOXIC POLLUTANTS
EXTRUSION PRESS HEAT TREATMENT CONTACT COOLING WATER
RAW WASTEWATER

Pollutant	Analytical Quantification Level (mg/l)	Number of Streams Analyzed	Number of Samples Analyzed	Number of Times Observed in Samples (mg/l) ND-0.010	0.011-0.100	0.101-1.000	1.000+
117. beryllium	0.010	5	7	7			
118. cadmium	0.002	5	7	7			
119. chromium (total)	0.005	5	7	7			
120. copper	0.009	5	7	1	6		
121. cyanide (total)	0.010	6	8	5	3		
122. lead	0.020	5	7	3	4		
123. mercury	0.0001	5	7	4	3		
124. nickel	0.005	5	7	5	2		
125. selenium	0.01	6	8	8			
126. silver	0.02	6	8	7	1		
127. thallium	0.100	6	8	8			
128. zinc	0.050	5	7	4	3		
129. 2,3,7,8-tetrachlorodibenzo-p-dioxin	0.005	0	0				

(a), (b), (c) Reported together.

Table V-42

SAMPLING DATA
EXTRUSION PRESS HEAT TREATMENT CONTACT COOLING WATER
RAW WASTEWATER

Pollutant	Stream Code	Sample Type	Source	Concentrations (mg/l) Day 1	Day 2	Day 3	Average
Toxic Pollutants							
4. benzene	F-6	1	ND	*	ND		*
	G-3	1	*	ND	*	*	*
	G-4	1	*	*			*
	G-5	1	*	*			*
	G-6	1	*	0.014			0.014
	V-5	1	0.004	ND			
23. chloroform	F-6	1	0.012	0.018	0.021		0.020
	G-3	1	0.015	*	0.011	*	*
	G-4	1	0.015	*			*
	G-5	1	0.015	*			*
	G-6	1	0.015	0.023			0.023
	V-5	1	ND	ND			
24. 2-chlorophenol	F-6	2	ND	0.020			0.020
	G-3	2	ND	ND	ND	ND	
	G-4	2	ND	ND			
	G-5	6	ND	ND			
	G-6	2	ND	ND			
	V-5	2	ND	ND			
30. 1,2-trans-dichloroethylene	F-6	1	ND	ND	ND		
	G-3	1	ND	*	ND	ND	*
	G-4	1	ND	*			*
	G-5	1	ND	0.013			0.013
	G-6	1	ND	ND			
	V-5	1	ND	ND			
44. methylene chloride	F-6	1	ND	0.011	0.110		0.061
	G-3	1	0.563	<0.290	<0.550	<0.175	<0.338
	G-4	1	0.563	0.110			0.110
	G-5	1	0.563	0.049			0.049
	G-6	1	0.563	0.800			0.800
	V-5	1	0.015	0.028			0.028
58. 4-nitrophenol	F-6	2	ND	ND			
	G-3	2	ND	*	ND	0.017	*
	G-4	2	ND	ND			
	G-5	6	ND	ND			
	G-6	2	ND	ND			
	V-5	2	ND	ND			
65. phenol	F-6	2	ND	ND			
	G-3	2	*	ND	ND	2.700	2.700
	G-4	2	*	ND			
	G-5	6	*	ND			
	G-6	2	*	ND			
	V-5	2	ND	*			*

Table V-42 (Continued)

SAMPLING DATA
EXTRUSION PRESS HEAT TREATMENT CONTACT COOLING WATER
RAW WASTEWATER

Pollutant	Stream Code	Sample Type	Source	Concentrations (mg/l) Day 1	Day 2	Day 3	Average
66. bis(2-ethylhexyl) phthalate	F-6	2	0.025	ND			
	G-3	2	*	0.190	0.035	0.085	0.103
	G-4	2	*	*			*
	G-5	6	*	0.032			0.032
	G-6	2	*	*			*
	V-5	2	0.008	ND			
67. butyl benzyl phthalate	F-6	2	ND	ND			
	G-3	2	ND	0.130	0.026	0.046	0.067
	G-4	2	ND	*			*
	G-5	6	ND	*			*
	G-6	2	ND	*			*
	V-5	2	ND	ND			
68. di-n-butyl phthalate	F-6	2	*	ND			
	G-3	2	*	0.022	0.013	0.015	0.017
	G-4	2	*	*			*
	G-5	6	*	*			*
	G-6	2	*	*			*
	V-5	2	ND	ND			
69. di-n-octyl phthalate	F-6	2	ND	ND			
	G-3	2	ND	ND	0.011	ND	0.011
	G-4	2	ND	ND			
	G-5	6	ND	*			*
	G-6	2	ND	*			*
	V-5	2	ND	ND			
91. chlordane	F-6	2		**			**
	G-3	2		ND	ND	ND	
	G-4	2		ND			
	G-5	6		0.0140			0.0140
	G-6	2		0.010			0.010
	V-5	2	ND	ND			
95. alpha-endosulfan	F-6	2	ND	ND			
	G-3	2	ND	ND	ND	ND	
	G-4	2	ND	ND			
	G-5	6	ND	0.500			0.500
	G-6	2	ND	**			**
	V-5	2	ND	ND			
96. beta-endosulfan	F-6	2	ND	**			**
	G-3	2	ND	ND	ND	ND	
	G-4	2	ND	ND			
	G-5	6	ND	**			**
	G-6	2	ND	0.200			0.200
	V-5	2	ND	ND			

Table V-42 (Continued)

SAMPLING DATA
EXTRUSION PRESS HEAT TREATMENT CONTACT COOLING WATER
RAW WASTEWATER

Pollutant	Stream Code	Sample Type	Source	Concentrations (mg/l) Day 1	Day 2	Day 3	Average
97. endosulfan sulfate	F-6	2	ND	ND			
	G-3	2	**	ND	ND	ND	
	G-4	2	**	**			**
	G-5	6	**	0.200			0.200
	G-6	2	**	ND			
	V-5	2	ND	ND			
98. endrin	F-6	2	ND	ND			
	G-3	2	ND	ND	ND	ND	
	G-4	2	ND	ND			
	G-5	6	ND	ND			
	G-6	2	ND	0.200			0.200
	V-5	2	ND	ND			
99. endrin aldehyde	F-6	2	ND	0.011			0.011
	G-3	2	ND	ND	ND	ND	
	G-4	2	ND	ND			
	G-5	6	ND	ND			
	G-6	2	ND	ND			
	V-5	2	ND	ND			
100. heptachlor	F-6	2	**	**			**
	G-3	2	ND	ND	ND	ND	
	G-4	2	ND	0.200			0.200
	G-5	6	ND	ND			
	G-6	2	ND	ND			
	V-5	2	ND	ND			
101. heptachlor epoxide	F-6	2	*	0.100			0.100
	G-3	2	**	ND	ND	ND	
	G-4	2	**	0.100			0.100
	G-5	6	**	ND			
	G-6	2	**	**			**
	V-5	2	ND	ND			
102. alpha-BHC	F-6	2	ND	ND			
	G-3	2	ND	ND	ND	ND	
	G-4	2	ND	ND			
	G-5	6	ND	**			**
	G-6	2	ND	**			**
	V-5	2	ND	ND			
115. arsenic	F-6	2	<0.01	<0.01			<0.01
	G-3	2	<0.01	<0.01	<0.01	<0.01	<0.01
	G-4	2	<0.01	<0.01			<0.01
	G-5	6	<0.01	<0.01			<0.01
	G-6	2	<0.01	<0.01			<0.01
	V-5	2	<0.005	0.010			0.010

Table V-42 (Continued)

SAMPLING DATA
EXTRUSION PRESS HEAT TREATMENT CONTACT COOLING WATER
RAW WASTEWATER

	Pollutant	Stream Code	Sample Type	Source	Concentrations (mg/l) Day 1	Day 2	Day 3	Average
118.	cadmium	G-3	2	<0.002	<0.002	<0.002	<0.002	<0.002
		G-4	2	<0.002	<0.002			<0.002
		G-5	6	<0.002	<0.002			<0.002
		G-6	2	<0.002	<0.002			<0.002
		V-5	2	<0.001	0.003			0.003
119.	chromium	G-3	2	<0.005	0.010	<0.005	<0.005	<0.007
		G-4	2	<0.005	<0.005			<0.005
		G-5	6	<0.005	<0.005			<0.002
		G-6	2	<0.005	<0.005			<0.005
		V-5	2	<0.001	0.002			0.002
120.	copper	G-3	2	<0.009	0.040	0.030	0.030	0.033
		G-4	2	<0.009	<0.009			<0.009
		G-5	6	<0.009	0.100			0.100
		G-6	2	<0.009	0.040			0.040
		V-5	2	0.027	0.024			0.024
121.	cyanide	F-6	2	ND	<0.001			<0.001
		G-3	2	ND	0.012	0.006	0.014	0.011
		G-4	2	ND	0.001			0.001
		G-5	6	ND	0.029			0.029
		G-6	2	ND	0.004			0.004
		V-5	1	0.0042	0.0042			0.0042
122.	lead	G-3	2	<0.020	0.040	0.040	<0.020	<0.033
		G-4	2	<0.020	0.020			0.020
		G-5	6	<0.020	<0.020			<0.020
		G-6	2	<0.020	<0.020			<0.020
		V-5	2	0.079	0.021			0.021
123.	mercury	G-3	2	0.0005	0.030	0.030	0.030	0.030
		G-4	2	0.0005	0.0005			0.0005
		G-5	6	0.0005	0.0004			0.0004
		G-6	2	0.0005	0.0002			0.0002
		V-5	2	<0.0002	<0.0002			<0.0002
124.	nickel	G-3	2	<0.005	0.040	<0.005	<0.005	<0.017
		G-4	2	<0.005	<0.005			<0.005
		G-5	6	<0.005	<0.005			<0.005
		G-6	2	<0.005	<0.005			<0.005
		V-5	2	0.009	0.017			0.017
126.	silver	F-6	2	<0.020	<0.02			<0.02
		G-3	2	<0.020	<0.020	<0.020	<0.020	<0.020
		G-4	2	<0.020	<0.020			<0.020
		G-5	6	<0.020	<0.020			<0.020
		G-6	2	<0.020	<0.020			<0.020
		V-5	2	0.05	0.07			0.07

Table V-42 (Continued)

SAMPLING DATA
EXTRUSION PRESS HEAT TREATMENT CONTACT COOLING WATER
RAW WASTEWATER

Pollutant	Stream Code	Sample Type	Source	Concentrations (mg/l) Day 1	Day 2	Day 3	Average
127. thallium	F-6	2	<0.100	<0.100			<0.100
	G-3	2	<0.100	<0.100	<0.100	<0.100	<0.100
	G-4	2	<0.100	<0.100			<0.100
	G-5	6	<0.100	<0.100			<0.100
	G-6	2	<0.100	<0.100			<0.100
	V-5	2	<0.001	0.010			0.010
128. zinc	G-3	2	<0.050	0.050	<0.050	<0.050	<0.050
	G-4	2	<0.050	<0.050			<0.050
	G-5	6	<0.050	<0.050			<0.050
	G-6	2	<0.050	0.050			0.050
	V-5	2	0.50	0.05			0.05
Nonconventional							
alkalinity	F-6	2		140	140		140
	G-3	2		410	125	180	238
	G-4	2		280			280
	G-5	6		450			450
	V-5	2		320			320
aluminum	F-6	2	<0.090	<0.100	1.700		<0.900
	G-3	2	<0.090	0.300	0.300	0.800	0.467
	G-4	2	<0.090	<0.100			<0.100
	G-5	6	<0.090	0.200			0.200
	G-6	2	<0.090	0.200			0.200
	V-5	2	0.09	2.1			2.1
calcium	F-6	2	<5.000	0.680	0.220		0.450
	G-3	2	<5.000	<3.500	<2.800	<3.900	<3.400
	G-4	2	<5.000	3.1			3.1
	G-5	6	<5.000	ND			
	G-6	2	<5.000	<5.000			<5.000
	V-5	2	9.8	3.4			3.4
chemical oxygen demand (COD)	F-6	2		<5			<5
	G-3	2		218	127	295	213
	G-4	2		<5			<5
	G-5	6		76			76
	G-6	2		74			74
	V-5	2	<1	4			4

Table V-42 (Continued)

SAMPLING DATA
EXTRUSION PRESS HEAT TREATMENT CONTACT COOLING WATER
RAW WASTEWATER

Pollutant	Stream Code	Sample Type	Source	Concentrations (mg/l) Day 1	Day 2	Day 3	Average
magnesium	F-6	2	<0.100	0.110	0.080		0.095
	G-3	2	0.300	0.200	0.200	0.300	0.233
	G-4	2	0.300	0.300			0.300
	G-5	6	0.300	0.500			0.500
	G-6	2	0.300	<0.100			<0.100
	V-5	2	63	0.79			0.79
phenols (total; by 4-AAP method)	F-6	2		<0.001			<0.001
	G-3	2		0.017	0.015	0.010	0.014
	G-4	2		0.011			0.011
	G-5	6		0.015			0.015
	V-5	1	.062	0.015			0.015
sulfate	F-6	2		10	20		15
	G-3	2		10	5	<25	<13
	G-4	2		74			74
	G-5	6		95			95
	V-5	2		42			42
total organic carbon (TOC)	F-6	2		<1			<1
	G-3	2		106	35	122	88
	G-4	2		5			5
	G-5	6		46			46
	G-6	2		27			27
	V-5	2	4.7	79			79
Conventional							
oil and grease	F-6	1		9			9
	G-3	1		59	36	280	125
	G-4	1		8			8
	G-5	1		20			20
	G-6	1		17			17
	V-5	1	16	7.4			7.4
suspended solids	F-6	2		<1			<1
	G-3	2		41	61	74	59
	G-4	2		2			2
	G-5	6		28			28
	G-6	2		3			3
	V-5	2		20			20
pH (standard units)	F-6	1	7.55	7.1	7.7		
	G-3	2		8.2	7.1	7.3	
	G-4	1		7.8			
	G-5	1		8.6			
	G-6	1		9.2			

Table V-43

EXTRUSION SOLUTION HEAT TREATMENT CONTACT COOLING WATER

Plant	Water Use l/kkg	Water Use gal/ton	Percent Recycle	Wastewater l/kkg	Wastewater gal/ton
1	*	*	100	0	0
2	161,800	38,800	100	0	0
3	9,631	2,310	91	0	0
4	*	*	100	0	0
5	1,268	304.0	0	181.0	43.40
6	41,420	9,933	99	879.7	211.0
7	39,690	9,520	80	1,993	478.0
8	2,635	632.0	0	2,635	632.0
9	41,690	10,000	87	3,056	733.0
10	3,394	814.0	0	3,381	811.0
11	5,003	1,200	0	5,003	1,200
12	8,547	2,050	0	6,421	1,540
13	7,130	1,710	0	7,130	1,710
14	10,730	2,573	0	10,730	2,573
15	15,680	3,760	0	15,680	3,760
16	*	*	*	30,020	7,200
17	*	*	*	44,150	10,590
18	*	*	0	*	*
19	*	*	0	*	*
20	*	*	0	*	*
21	*	*	0	*	*
22	*	*	*	*	*
23	*	*	*	*	*
24	*	*	0	*	*
25	*	*	*	*	*
26	*	*	0	*	*
27	4,962	1,190	*	*	*

*Data not available.

Statistical Summary

Minimum	1,268	304.0	0	0
Maximum	161,800	38,800	44,150	10,590
Mean	25,250	6,057	7,901	1,895
Median	9,089	2,180	3,056	733.0
Sample:	14 of 27 plants		17 of 27 plants	
Nonzero Mean	25,250	6,057	10,330	2,478
Sample:	14 of 27 plants		13 of 27 plants	

Table V-44

FREQUENCY OF OCCURRENCE OF TOXIC POLLUTANTS
EXTRUSION SOLUTION HEAT TREATMENT CONTACT COOLING WATER
RAW WASTEWATER

	Pollutant	Analytical Quantification Level (mg/l)	Number of Streams Analyzed	Number of Samples Analyzed	Number of Times Observed in Samples (mg/l) ND-0.010	0.011-0.100	0.101-1.000	1.000+
1.	acenaphthene	0.010	3	3	3			
2.	acrolein	0.010	3	5	5			
3.	acrylonitrile	0.010	3	5	5			
4.	benzene	0.010	3	5	5			
5.	benzidine	0.010	3	3	3			
6.	carbon tetrachloride	0.010	3	5	5			
7.	chlorobenzene	0.010	3	5	5			
8.	1,2,4-trichlorobenzene	0.010	3	3	3			
9.	hexachlorobenzene	0.010	3	3	3			
10.	1,2-dichloroethane	0.010	3	5	5			
11.	1,1,1-trichloroethane	0.010	3	5	5			
12.	hexachloroethane	0.010	3	3	3			
13.	1,1-dichloroethane	0.010	3	5	5			
14.	1,1,2-trichloroethane	0.010	3	5	5			
15.	1,1,2,2-tetrachloroethane	0.010	3	5	5			
16.	chloroethane	0.010	3	5	5			
17.	bis(chloromethyl)ether	0.010	3	5	5			
18.	bis(chloroethyl)ether	0.010	3	3	3			
19.	2-chloroethyl vinyl ether	0.010	3	5	5			
20.	2-chloronaphthalene	0.010	3	3	3			
21.	2,4,6-trichlorophenol	0.010	3	3	3			
22.	p-chloro-m-cresol	0.010	3	3	3			
23.	chloroform	0.010	3	5	5			
24.	2-chlorophenol	0.010	3	3	3			
25.	1,2-dichlorobenzene	0.010	3	3	3			
26.	1,3-dichlorobenzene	0.010	3	3	3			
27.	1,4-dichlorobenzene	0.010	3	3	3			
28.	3,3'-dichlorobenzidine	0.010	3	3	3			
29.	1,1-dichloroethylene	0.010	3	5	5			
30.	1,2-trans-dichloroethylene	0.010	3	5	5			
31.	2,4-dichlorophenol	0.010	3	3	3			
32.	1,2-dichloropropane	0.010	3	5	5			
33.	1,3-dichloropropene	0.010	3	5	5			
34.	2,4-dimethylphenol	0.010	3	3	3			
35.	2,4-dinitrotoluene	0.010	3	3	3			
36.	2,6-dinitrotoluene	0.010	3	3	3			
37.	1,2-diphenylhydrazine	0.010	3	3	3			
38.	ethylbenzene	0.010	3	5	5			
39.	fluoranthene	0.010	3	3	3			

Table V-44 (Continued)

FREQUENCY OF OCCURRENCE OF TOXIC POLLUTANTS
EXTRUSION SOLUTION HEAT TREATMENT CONTACT COOLING WATER
RAW WASTEWATER

	Pollutant	Analytical Quantification Level (mg/l)	Number of Streams Analyzed	Number of Samples Analyzed	Number of Times Observed in Samples (mg/l) ND-0.010	0.011-0.100	0.101-1.000	1.000+
40.	4-chlorophenyl phenyl ether	0.010	3	3	3			
41.	4-bromophenyl phenyl ether	0.010	3	3	3			
42.	bis(2-chloroisopropyl)ether	0.010	3	3	3			
43.	bis(2-chloroethoxy)methane	0.010	3	3	3			
44.	methylene chloride	0.010	3	5	3	1	1	
45.	methyl chloride (chloromethane)	0.010	3	5	5			
46.	methyl bromide (bromomethane)	0.010	3	5	5			
47.	bromoform (tribromomethane)	0.010	3	5	5			
48.	dichlorobromomethane	0.010	3	5	5			
49.	trichlorofluoromethane	0.010	3	5	5			
50.	dichlorodifluoromethane	0.010	3	5	5			
51.	chlorodibromomethane	0.010	3	5	5			
52.	hexachlorobutadiene	0.010	3	3	3			
53.	hexachlorocyclopentadiene	0.010	3	3	3			
54.	isophorone	0.010	3	3	3			
55.	naphthalene	0.010	3	3	3			
56.	nitrobenzene	0.010	3	3	3			
57.	2-nitrophenol	0.010	3	3	3			
58.	4-nitrophenol	0.010	3	3	3			
59.	2,4-dinitrophenol	0.010	3	3	3			
60.	4,6-dinitro-o-cresol	0.010	3	3	3			
61.	N-nitrosodimethylamine	0.010	3	3	3			
62.	N-nitrosodiphenylamine	0.010	3	3	3			
63.	N-nitrosodi-n-propylamine	0.010	3	3	3			
64.	pentachlorophenol	0.010	3	3	3			
65.	phenol	0.010	3	3	3			
66.	bis (2-ethylhexyl) phthalate	0.010	3	3	3			
67.	butyl benzyl phthalate	0.010	3	3	3			
68.	di-n-butyl phthalate	0.010	3	3	3			
69.	di-n-octyl phthalate	0.010	3	3	3			
70.	diethyl phthalate	0.010	3	3	3			
71.	dimethyl phthalate	0.010	3	3	3			
72.	benzo(a)anthracene	0.010	3	3	3			
73.	benzo(a)pyrene	0.010	3	3	3			
74.	benzo(b)fluoranthene	0.010	3	3	3			
75.	benzo(k)fluoranthene	0.010	3	3	3			
76.	chrysene	0.010	3	3	3			
77.	acenaphthylene	0.010	3	3	3			
78.	anthracene (a)	0.010	3	3	3			

Table V-44 (Continued)

FREQUENCY OF OCCURRENCE OF TOXIC POLLUTANTS
EXTRUSION SOLUTION HEAT TREATMENT CONTACT COOLING WATER
RAW WASTEWATER

	Pollutant	Analytical Quantification Level (mg/l)	Number of Streams Analyzed	Number of Samples Analyzed	Number of Times Observed in Samples (mg/l) ND-0.010	0.011-0.100	0.101-1.000	1.000+
79.	benzo(ghi)perylene	0.010	3	3	3			
80.	fluorene	0.010	3	3	3			
81.	phenanthrene (a)	0.010	-	-				
82.	dibenzo(a,h)anthracene	0.010	3	3	3			
83.	indeno (1,2,3-c,d)pyrene	0.010	3	3	3			
84.	pyrene	0.010	3	3	3			
85.	tetrachloroethylene	0.010	3	5	5			
86.	toluene	0.010	3	5	5			
87.	trichloroethylene	0.010	3	5	5			
88.	vinyl chloride (chloroethylene)	0.010	3	5	5			
89.	aldrin	0.005	3	3	3			
90.	dieldrin	0.005	3	3	3			
91.	chlordane	0.005	3	3	3			
92.	4,4'-DDT	0.005	3	3	3			
93.	4,4'-DDE	0.005	3	3	3			
94.	4,4'-DDD	0.005	3	3	3			
95.	alpha-endosulfan	0.005	3	3	3			
96.	beta-endosulfan	0.005	3	3	3			
97.	endosulfan sulfate	0.005	3	3	3			
98.	endrin	0.005	3	3	3			
99.	endrin aldehyde	0.005	3	3	3			
100.	heptachlor	0.005	3	3	3			
101.	heptachlor epoxide	0.005	3	3	3			
102.	alpha-BHC	0.005	3	3	3			
103.	beta-BHC	0.005	3	3	3			
104.	gamma-BHC	0.005	3	3	3			
105.	delta-BHC	0.005	3	3	3			
106.	PCB-1242 (b)	0.005	3	3	3			
107.	PCB-1254 (b)	0.005	-	-				
108.	PCB-1221 (b)	0.005	-	-				
109.	PCB-1232 (b)	0.005	-	-				
110.	PCB-1248 (c)	0.005	3	3	3			
111.	PCB-1260 (c)	0.005	-	-				
112.	PCB-1016 (c)	0.005	-	-				
113.	toxaphene	0.005	3	3	3			
114.	antimony	0.100	2	4	3	1		
115.	arsenic	0.010	4	6	4	2		
116.	asbestos	10 MFL	0	0				

Table V-44 (Continued)

FREQUENCY OF OCCURRENCE OF TOXIC POLLUTANTS
EXTRUSION SOLUTION HEAT TREATMENT CONTACT COOLING WATER
RAW WASTEWATER

Pollutant	Analytical Quantification Level (mg/l)	Number of Streams Analyzed	Number of Samples Analyzed	Number of Times Observed in Samples (mg/l)			
				ND-0.010	0.011-0.100	0.101-1.000	1.000+
117. beryllium	0.010	4	6	6			
118. cadmium	0.002	4	6	6			
119. chromium (total)	0.005	4	6	4	1		1
120. copper	0.009	4	6	2	4		
121. cyanide (total)	0.010	4	6	3	3		
122. lead	0.020	4	6	5	1		
123. mercury	0.0001	4	6	6			
124. nickel	0.005	4	6	4	2		
125. selenium	0.01	2	4	2	1	1	
126. silver	0.02	2	4	4			
127. thallium	0.100	2	4	4			
128. zinc	0.050	4	6		6		
129. 2,3,7,8-tetrachlorodibenzo-p-dioxin	0.005	0	0				

(a), (b), (c) Reported together.

Table V-45

SAMPLING DATA
EXTRUSION SOLUTION HEAT TREATMENT CONTACT COOLING WATER
RAW WASTEWATER

Pollutant	Stream Code	Sample Type	Source	Concentrations (mg/l) Day 1	Day 2	Day 3	Average
Toxic Pollutants							
4. benzene	N-2	1	ND	ND	ND	ND	
	R-5	1	ND	ND			
	V-6	1	*	*			*
11. 1,1,1-trichloroethane	N-2	1	ND	ND	ND	ND	
	R-5	1	ND	ND			
	V-6	1	ND	*			*
23. chloroform	N-2	1	*	ND	ND	ND	
	R-5	1	0.040	ND			
	V-6	1	ND	*			*
44. methylene chloride	N-2	1	ND	*	*	0.630	0.210
	R-5	1	*	*			*
	V-6	1	0.015	0.021			0.021
66. bis(2-ethylhexyl) phthalate	N-2	6	ND	*			*
	R-5	6	*	*			*
	V-6	1	*	*			*
86. toluene	N-2	1	ND	ND	ND	ND	
	R-5	1	ND	ND			
	V-6	1	*	*			*
114. antimony	V-6	1	<0.001	0.002			0.002
	W-4	1	0.003	0.032	<0.001	0.009	<0.014
115. arsenic	N-2	6	<0.0002	<0.0002			<0.0002
	R-5	6	0.0037	0.0032			0.0032
	V-6	1	<0.005	<0.005			<0.005
	W-4	1	<0.005	0.020	<0.005	0.018	<0.014
118. cadmium	N-2	6	<0.0005	<0.0005			<0.0005
	R-5	6	<0.0005	0.0011			0.0011
	V-6	1	<0.001	0.002			0.002
	W-4	1	<0.001	<0.001	<0.001	<0.001	<0.001
119. chromium	N-2	6	<0.001	0.018			0.018
	R-5	6	<0.001	5.100			5.100
	V-6	1	<0.001	0.005			0.005
	W-4	1	0.004	0.004	0.006	0.003	0.004
120. copper	N-2	6	0.008	0.015			0.015
	R-5	6	0.010	0.013			0.013
	V-6	1	0.027	0.024			0.024
	W-4	1	0.010	0.008	0.001	0.060	0.023

Table V-45 (Continued)

SAMPLING DATA
EXTRUSION SOLUTION HEAT TREATMENT CONTACT COOLING WATER
RAW WASTEWATER

Pollutant	Stream Code	Sample Type	Source	Concentrations (mg/l) Day 1	Day 2	Day 3	Average
121. cyanide	N-2	6		<0.02			<0.02
	R-5	1		<0.02			<0.02
	V-6	1	0.0042	0.010			0.010
	W-4	1	0.030	0.015	0.013	0.020	0.016
122. lead	N-2	6	0.010	0.012			0.012
	R-5	6	<0.001	0.004			0.004
	V-6	1	0.079	0.003			0.003
	W-4	1	0.009	0.004	0.004	0.008	0.005
123. mercury	N-2	6	0.0041	0.009			0.009
	R-5	6	0.0007	<0.0001			<0.0001
	V-6	1	<0.0002	<0.0002			<0.0002
	W-4	1	<0.002	<0.002	<0.002	<0.002	<0.002
124. nickel	N-2	6	<0.001	<0.001			<0.001
	R-5	6	<0.001	0.018			0.018
	V-6	1	0.009	0.038			0.038
	W-4	1	0.060	<0.001	<0.001	<0.001	<0.001
125. selenium	V-6	1	0.020	0.24			0.24
	W-4	1	0.015	<0.005	<0.005	0.013	<0.008
127. thallium	V-6	1	<0.001	<0.001			<0.001
	W-4	1	<0.001	<0.001	<0.001	0.002	<0.001
128. zinc	N-2	6	<0.010	0.038			0.038
	R-5	6	0.053	0.038			0.038
	V-6	1	0.50	0.08			0.08
	W-4	1	0.03	0.03	0.03	0.03	0.03
Nonconventional							
alkalinity	N-2	6		110			110
	R-5	6		34			34
	V-6	1		280			280
	W-4	1	170	150	160	160	160
aluminum	N-2	6	<0.500	<0.500			<0.500
	R-5	6	<0.500	0.540			0.540
	V-6	1	0.09	0.20			0.20
	W-4	1	0.06	0.24	0.58	1.4	0.7
calcium	N-2	6	28	38			38
	R-5	6	60	58			58
	V-6	1	9.8	78			78
	W-4	1	55	29	54	31	38

Table V-45 (Continued)

SAMPLING DATA
EXTRUSION SOLUTION HEAT TREATMENT CONTACT COOLING WATER
RAW WASTEWATER

Pollutant	Stream Code	Sample Type	Source	Concentrations (mg/l) Day 1	Day 2	Day 3	Average
chemical oxygen demand (COD)	N-2	6	5	7			7
	R-5	6		20			20
	V-6	1	<1	4			4
	W-4	1	12	3.8	7.5	3.9	5.1
magnesium	N-2	6	4.39	5.3			5.3
	R-5	6	22.1	24.5			24.5
	V-6	1	63	50			50
	W-4	1	19	24	28	18	23
phenols (total; by 4-AAP method)	N-2	6	ND	0.014			0.014
	R-5	1		0.007			0.007
	V-6	1	0.062	0.130			0.130
	W-4	1	1.0	0.088	0.010	0.013	0.037
sulfate	N-2	6		7			7
	R-5	6		120			120
	V-6	1		43			43
	W-4	1	81	86	77	92	85
total dissolved solids	N-2	6		160			160
	R-5	6		580			580
	V-6	1		390			390
	W-4	1	3	320	240	400	320
total organic carbon (TOC)	N-2	6	2.7	1.8			1.8
	R-5	6		2.7			2.7
	V-6	1	4.7	28			28
	W-4	1	0	5	10	6	7
Conventional							
oil and grease	N-2	1	<5	68	14		41
	V-6	1	16	5.8			5.8
	W-4	1	6.6	4.0	1.5	4.8	3.4
suspended solids	N-2	6	<2	<2			<2
	R-5	6		<2			<2
	V-6	1		11			11
	W-4	1	<1	11	<1	<1	<4
pH (standard units)	N-2	1	7.1	7.3	7.3	7.2	
	R-5	6		7.3			
	V-6	1	7.3	7.2			
	W-4	1	7.7	7.3	7.7		

Table V-46

FORGING SOLUTION HEAT TREATMENT CONTACT COOLING WATER

Plant	Water Use l/kkg	Water Use gal/ton	Percent Recycle	Wastewater l/kkg	Wastewater gal/ton
1	833.9	200.0	0	0	0
2	1,151	276.0	0	1,109	266.0
3	2,956	709.0	*	2,148	515.2
4	2,502	600.0	0	2,502	600.0
5	3,235	776.0	0	3,235	776.0
6	4,169	1,000	0	3,752	900
7	21,120	5,065	0	21,120	5,065
8	32,230	7,730	0	32,230	7,730
9	*	*	*	32,320	7,752
10	*	*	0	*	*
11	*	*	*	*	*
12	*	*	0	*	*

*Data not available.

Statistical Summary

Minimum	833.9	200.0	0	0
Maximum	32,230	7,730	32,320	7,752
Mean	8,524	2,045	10,940	2,623
Median	3,096	742.5	3,235	776.0
Sample:	8 of 12 plants		9 of 12 plants	
Nonzero Mean	8,524	2,045	12,300	2,951
Sample:	8 of 12 plants		8 of 12 plants	

Table V-47

FREQUENCY OF OCCURRENCE OF TOXIC POLLUTANTS
FORGING SOLUTION HEAT TREATMENT CONTACT COOLING WATER
RAW WASTEWATER

	Pollutant	Analytical Quantification Level (mg/l)	Number of Streams Analyzed	Number of Samples Analyzed	Number of Times Observed in Samples (mg/l)			
					ND-0.010	0.011-0.100	0.101-1.000	1.000+
1.	acenaphthene	0.010	4	6	6			
2.	acrolein	0.010	3	5	5			
3.	acrylonitrile	0.010	3	5	5			
4.	benzene	0.010	3	5	5			
5.	benzidine	0.010	4	6	6			
6.	carbon tetrachloride	0.010	3	5	5			
7.	chlorobenzene	0.010	3	5	5			
8.	1,2,4-trichlorobenzene	0.010	4	6	6			
9.	hexachlorobenzene	0.010	4	6	6			
10.	1,2-dichloroethane	0.010	3	5	5			
11.	1,1,1-trichloroethane	0.010	3	5	5			
12.	hexachloroethane	0.010	4	6	6			
13.	1,1-dichloroethane	0.010	3	5	5			
14.	1,1,2-trichloroethane	0.010	3	5	5			
15.	1,1,2,2-tetrachloroethane	0.010	3	5	5			
16.	chloroethane	0.010	3	5	5			
17.	bis(chloromethyl)ether	0.010	3	5	5			
18.	bis(chloroethyl)ether	0.010	4	6	6			
19.	2-chloroethyl vinyl ether	0.010	3	5	5			
20.	2-chloronaphthalene	0.010	4	6	6			
21.	2,4,6-trichlorophenol	0.010	4	6	6			
22.	p-chloro-m-cresol	0.010	4	6	6			
23.	chloroform	0.010	3	5	3	2		
24.	2-chlorophenol	0.010	4	6	6			
25.	1,2-dichlorobenzene	0.010	4	6	6			
26.	1,3-dichlorobenzene	0.010	4	6	6			
27.	1,4-dichlorobenzene	0.010	4	6	6			
28.	3,3'-dichlorobenzidine	0.010	4	6	6			
29.	1,1-dichloroethylene	0.010	3	5	5			
30.	1,2-trans-dichloroethylene	0.010	3	5	5			
31.	2,4-dichlorophenol	0.010	4	6	6			
32.	1,2-dichloropropane	0.010	3	5	5			
33.	1,3-dichloropropene	0.010	3	5	5			
34.	2,4-dimethylphenol	0.010	4	6	6			
35.	2,4-dinitrotoluene	0.010	4	6	6			
36.	2,6-dinitrotoluene	0.010	4	6	6			
37.	1,2-diphenylhydrazine	0.010	4	6	6			
38.	ethylbenzene	0.010	3	5	5			
39.	fluoranthene	0.010	4	6	6			

Table V-47 (Continued)

FREQUENCY OF OCCURRENCE OF TOXIC POLLUTANTS
FORGING SOLUTION HEAT TREATMENT CONTACT COOLING WATER
RAW WASTEWATER

	Pollutant	Analytical Quantification Level (mg/l)	Number of Streams Analyzed	Number of Samples Analyzed	Number of Times Observed in Samples (mg/l) ND-0.010	0.011-0.100	0.101-1.000	1.000+
40.	4-chlorophenyl phenyl ether	0.010	4	6	6			
41.	4-bromophenyl phenyl ether	0.010	4	6	6			
42.	bis(2-chloroisopropyl)ether	0.010	4	6	6			
43.	bis(2-chloroethoxy)methane	0.010	4	6	6			
44.	methylene chloride	0.010	3	5	4	1		
45.	methyl chloride (chloromethane)	0.010	3	5	5			
46.	methyl bromide (bromomethane)	0.010	3	5	5			
47.	bromoform (tribromomethane)	0.010	3	5	4	1		
48.	dichlorobromomethane	0.010	3	5	5			
49.	trichlorofluoromethane	0.010	3	5	5			
50.	dichlorodifluoromethane	0.010	3	5	5			
51.	chlorodibromomethane	0.010	3	5	5			
52.	hexachlorobutadiene	0.010	4	6	6			
53.	hexachlorocyclopentadiene	0.010	4	6	6			
54.	isophorone	0.010	4	6	6			
55.	naphthalene	0.010	4	6	6			
56.	nitrobenzene	0.010	4	6	6			
57.	2-nitrophenol	0.010	4	6	6			
58.	4-nitrophenol	0.010	4	6	6			
59.	2,4-dinitrophenol	0.010	4	6	6			
60.	4,6-dinitro-o-cresol	0.010	4	6	6			
61.	N-nitrosodimethylamine	0.010	4	6	6			
62.	N-nitrosodiphenylamine	0.010	4	6	6			
63.	N-nitrosodi-n-propylamine	0.010	4	6	6			
64.	pentachlorophenol	0.010	4	6	6			
65.	phenol	0.010	4	6	6			
66.	bis (2-ethylhexyl) phthalate	0.010	4	8	6	1	1	
67.	butyl benzyl phthalate	0.010	4	6	6			
68.	di-n-butyl phthalate	0.010	4	6	6			
69.	di-n-octyl phthalate	0.010	4	6	6			
70.	diethyl phthalate	0.010	4	6	6			
71.	dimethyl phthalate	0.010	4	6	6			
72.	benzo(a)anthracene	0.010	4	6	6			
73.	benzo(a)pyrene	0.010	4	6	6			
74.	benzo(b)fluoranthene	0.010	4	6	6			
75.	benzo(k)fluoranthene	0.010	4	6	6			
76.	chrysene	0.010	4	6	6			
77.	acenaphthylene	0.010	4	6	6			
78.	anthracene (a)	0.010	4	6	6			

Table V-47 (Continued)

FREQUENCY OF OCCURRENCE OF TOXIC POLLUTANTS
FORGING SOLUTION HEAT TREATMENT CONTACT COOLING WATER
RAW WASTEWATER

	Pollutant	Analytical Quantification Level (mg/l)	Number of Streams Analyzed	Number of Samples Analyzed	Number of Times Observed in Samples (mg/l) ND-0.010	0.011-0.100	0.101-1.000	1.000+
79.	benzo(ghi)perylene	0.010	4	6	6			
80.	fluorene	0.010	4	6	6			
81.	phenanthrene (a)	0.010	-	-				
82.	dibenzo(a,h)anthracene	0.010	4	6	6			
83.	indeno (1,2,3-c,d)pyrene	0.010	4	6	6			
84.	pyrene	0.010	4	6	6			
85.	tetrachloroethylene	0.010	3	5	5			
86.	toluene	0.010	3	5	5			
87.	trichloroethylene	0.010	3	5	5			
88.	vinyl chloride (chloroethylene)	0.010	3	5	5			
89.	aldrin	0.005	4	4	4			
90.	dieldrin	0.005	4	4	4			
91.	chlordane	0.005	4	4	4			
92.	4,4'-DDT	0.005	4	4	4			
93.	4,4'-DDE	0.005	4	4	4			
94.	4,4'-DDD	0.005	4	4	4			
95.	alpha-endosulfan	0.005	4	4	4			
96.	beta-endosulfan	0.005	4	4	4			
97.	endosulfan sulfate	0.005	4	4	4			
98.	endrin	0.005	4	4	4			
99.	endrin aldehyde	0.005	4	4	4			
100.	heptachlor	0.005	4	4	4			
101.	heptachlor epoxide	0.005	4	4	4			
102.	alpha-BHC	0.005	4	4	4			
103.	beta-BHC	0.005	4	4	4			
104.	gamma-BHC	0.005	4	4	4			
105.	delta-BHC	0.005	4	4	4			
106.	PCB-1242 (b)	0.005	4	4	4			
107.	PCB-1254 (b)	0.005	-	-				
108.	PCB-1221 (b)	0.005	-	-				
109.	PCB-1232 (b)	0.005	-	-				
110.	PCB-1248 (c)	0.005	4	4	4			
111.	PCB-1260 (c)	0.005	-	-				
112.	PCB-1016 (c)	0.005	-	-				
113.	toxaphene	0.005	4	4	4			
114.	antimony	0.100	5	7	6	1		
115.	arsenic	0.010	8	12	11	1		
116.	asbestos	10 MFL	0	0				

Table V-47 (Continued)

FREQUENCY OF OCCURRENCE OF TOXIC POLLUTANTS
FORGING SOLUTION HEAT TREATMENT CONTACT COOLING WATER
RAW WASTEWATER

Pollutant	Analytical Quantification Level (mg/l)	Number of Streams Analyzed	Number of Samples Analyzed	Number of Times Observed in Samples (mg/l)			
				ND-0.010	0.011-0.100	0.101-1.000	1.000+
117. beryllium	0.010	8	12	12			
118. cadmium	0.002	8	12	11	1		
119. chromium (total)	0.005	8	12	4	4	2	2
120. copper	0.009	8	12	2	9	1	
121. cyanide (total)	0.010	8	12	6			6
122. lead	0.020	8	12	6	4	1	1
123. mercury	0.0001	8	12	12			
124. nickel	0.005	8	12	11	1		
125. selenium	0.01	5	7	7			
126. silver	0.02	5	7	7			
127. thallium	0.100	5	7	5	2		
128. zinc	0.050	8	12		9	2	1
129. 2,3,7,8-tetrachlorodibenzo-p-dioxin	0.005	0	0				

(a), (b), (c) Reported together.

Table V-48

SAMPLING DATA
FORGING SOLUTION HEAT TREATMENT CONTACT COOLING WATER
RAW WASTEWATER

Pollutant	Stream Code	Sample Type	Source	Concentrations (mg/l) Day 1	Day 2	Day 3	Average
Toxic Pollutants							
23. chloroform	J-3	1	0.019	0.016	*	0.043	0.023
	Q-3	1	ND	ND			
	R-4	1	0.040	ND			
44. methylene chloride	J-3	1	ND	0.015	*	*	*
	Q-3	1	<0.010	*			*
	R-4	1	<0.005	*			*
47. bromoform	J-3	1	ND	ND	ND	0.016	0.016
	Q-3	1	ND	ND			
	R-4	1	ND	ND			
66. bis(2-ethylhexyl) phthalate	A-2	1	0.200	0.890			0.890
	J-3	1,2,2	ND	*	*	*	*
	Q-3	1	<0.010	*	*	*	*
	R-4	6	<0.005	0.050			0.050
114. antimony	A-2	1	<0.1	<0.1			<0.1
	W-8	1	0.003	<0.001	0.003	<0.001	<0.002
	W-9	1	0.003	0.008			0.008
	W-10	1	0.003	0.007			0.007
	W-11	1	0.003	0.038			0.038
115. arsenic	A-2	1	<0.01	<0.01			<0.01
	J-3	1	<0.01	<0.01	<0.01	<0.01	<0.01
	Q-3	1	0.0028	0.037			0.037
	R-4	6	0.0037	0.0039			0.0039
	W-8	1	<0.005	<0.005	<0.005	<0.005	<0.005
	W-9	1	<0.005	0.001			0.001
	W-10	1	<0.005	<0.005			<0.005
	W-11	1	<0.005	0.001			0.001
118. cadmium	A-2	1	<0.002	<0.002			<0.002
	J-3	1,2,2	<0.01	<0.01	<0.01	<0.01	<0.01
	Q-3	1	<0.0005	0.0011			0.0011
	R-4	6	<0.0005	0.012			0.012
	W-8	1	<0.001	<0.001	0.002	0.001	<0.001
	W-9	1	<0.001	<0.001			<0.001
	W-10	1	<0.001	<0.001			<0.001
	W-11	1	<0.001	<0.001			<0.001

Table V-48 (Continued)

SAMPLING DATA
FORGING SOLUTION HEAT TREATMENT CONTACT COOLING WATER
RAW WASTEWATER

Pollutant	Stream Code	Sample Type	Source	Concentrations (mg/l) Day 1	Day 2	Day 3	Average
119. chromium	A-2	1	<0.005	0.007			0.007
	J-3	1,2,2	<0.03	0.05	0.13	0.13	0.01
	Q-3	1	0.004	72			72
	R-4	6	<0.0001	46			46
	W-8	1	0.004	0.012	0.002	0.004	0.006
	W-9	1	0.004	0.006			0.006
	W-10	1	0.004	0.014			0.014
	W-11	1	0.004	0.030			0.030
120. copper	A-2	1	0.01	0.1			0.1
	J-3	1,2,2	0.03	<0.02	0.07	0.06	<0.05
	Q-3	1	0.026	0.07			0.07
	R-4	6	0.01	0.38			0.38
	W-8	1	0.010	0.039	0.019	0.019	0.026
	W-9	1	0.010	0.08			0.08
	W-10	1	0.010	0.07			0.07
	W-11	1	0.010	0.005			0.005
121. cyanide	A-2	1		<0.001			<0.001
	J-3	1		0.002	<0.002	0.006	<0.003
	Q-3	1		<0.02			<0.02
	R-4	1		<0.02			<0.02
	W-8	1	30	15	19	18	17
	W-9	1	30	2.2			2.2
	W-10	1	30	530			530
	W-11	1	30	15			15
122. lead	A-2	1	<0.02	0.06			0.06
	J-3	1,2,2	<0.050	<0.05	<0.05	<0.05	<0.05
	Q-3	1	0.006	ND			
	R-4	6	<0.001	17			17
	W-8	1	0.009	0.007	0.032	0.250	0.096
	W-9	1	0.009	0.019			0.019
	W-10	1	0.009	0.046			0.046
	W-11	1	0.009	0.005			0.005
123. mercury	A-2	1	0.0006	0.0005			0.0005
	J-3	1,2,2	<0.0004	<0.0004	<0.0002	<0.0002	<0.0003
	Q-3	1	<0.0001	<0.0001			<0.0001
	R-4	6	0.0007	<0.00005			<0.00005
	W-8	1	<0.0002	<0.0002	<0.002	<0.002	<0.001
	W-9	1	<0.0002	<0.0002			<0.0002
	W-10	1	<0.0002	<0.0002			<0.0002
	W-11	1	<0.0002	<0.0002			<0.0002

Table V-48 (Continued)

SAMPLING DATA
FORGING SOLUTION HEAT TREATMENT CONTACT COOLING WATER
RAW WASTEWATER

Pollutant	Stream Code	Sample Type	Source	Concentrations (mg/l) Day 1	Day 2	Day 3	Average
124. nickel	A-2	1	<0.005	<0.005			<0.005
	J-3	1,2,2	<0.02	<0.02	<0.02	<0.02	<0.02
	Q-3	1	<0.001	0.006			0.006
	R-4	6	<0.001	<0.008			<0.008
	W-8	1	0.060	0.018	<0.001	<0.001	<0.007
	W-9	1	0.060	<0.001			<0.001
	W-10	1	0.060	0.006			0.006
	W-11	1	0.060	0.004			0.004
125. selenium	A-2	1	<0.01	<0.01			<0.01
	W-8	1	0.015	<0.005	0.007	<0.005	<0.006
	W-9	1	0.015	<0.005			<0.005
	W-10	1	0.015	<0.005			<0.005
	W-11	1	0.015	<0.005			<0.005
127. thallium	A-2	1	<0.1	<0.1			<0.1
	W-8	1	<0.001	0.002	<0.001	0.042	<0.015
	W-9	1	<0.001	0.006			0.006
	W-10	1	<0.001	0.013			0.013
	W-11	1	<0.001	<0.001			<0.001
128. zinc	A-2	1	0.06	0.05			0.05
	J-3	1,2,2	0.04	0.03	0.07	0.08	0.06
	Q-3	1	<0.01	0.19			0.19
	R-4	6	0.053	5.2			5.2
	W-8	1	0.03	0.03	0.03	0.03	0.03
	W-9	1	0.03	0.02			0.02
	W-10	1	0.03	0.18			0.18
	W-11	1	0.03	0.03			0.03
Nonconventional							
alkalinity	A-2	1		92			92
	J-3	1,2,2	117	140	100	109	116
	Q-3	1		170			170
	R-4	6		170			170
	W-8	1	170	100	100	140	113
	W-9	1	170	200			200
	W-10	1	170	1,200			1,200
	W-11	1	170	140			140
aluminum	A-2	1	<0.09	<0.15			<0.15
	J-3	1,2,2	<0.1	0.9	1.2	1.3	1.1
	C-3	1	<0.5	1.2			1.2
	R-4	6	<0.5	9			9
	W-8	1	0.06	0.86	0.78	0.14	0.59
	W-9	1	0.06	0.90			0.90
	W-10	1	0.06	1.0			1.0
	W-11	1	0.06	0.45			0.45

Table V-48 (Continued)

SAMPLING DATA
FORGING SOLUTION HEAT TREATMENT CONTACT COOLING WATER
RAW WASTEWATER

Pollutant	Stream Code	Sample Type	Source	Concentrations (mg/l) Day 1	Day 2	Day 3	Average
calcium	A-2	1	39	49			49
	J-3	1,2,2	ND	40	36	37	38
	Q-3	1	61	77			77
	R-4	6	60	80			80
	W-8	1	55	22	22	2.3	15
	W-9	1	55	14			14
	W-10	1	55	7.0			7.0
	W-11	1	5.5	28			28
chemical oxygen demand (COD)	A-2	1	8	18			18
	J-3	1,2,2	5	6	<5	<5	<5
	Q-3	1		6			6
	R-4	6		56			56
	W-8	1	12	79	15	16	37
	W-9	1	12	96			96
	W-10	1	12	3,300			3,300
	W-11	1	12	80			80
dissolved solids	A-2	1		188			188
	J-3	1,2,2	177	206	202	2,723	1,044
	Q-3	1		1,370			1,370
	R-4	6		720			720
	W-8	1	3	690	660	380	580
	W-9	1	3	1,200			1,200
	W-19	1	3	4,400			4,400
	W-11	1	3	360			360
magnesium	A-2	1	8.7	8.1			8.1
	J-3	1,2,2	ND	13	12	12	12
	Q-3	1	12.2	35			35
	R-4	6	22.1	30.5			30.5
	W-8	1	19	11	13	16	13
	W-9	1	19	9.7			9.7
	W-10	1	19	0.40			0.40
	W-11	1	19	15			15
phenols (total; by 4-AAP method)	A-2	1		0.019			0.019
	J-3	1,2,2		1.6	0.01		0.8
	Q-3	1		<0.002			<0.002
	R-4	6		0.003			0.003
	W-8	1	1.0	12.0	23.0	0.098	11.7
	W-9	1	1.0	0.17			0.17
	W-10	1	1.0	0.01			0.01
	W-11	1	1.0	0.01			0.01

Table V-48 (Continued)

SAMPLING DATA
FORGING SOLUTION HEAT TREATMENT CONTACT COOLING WATER
RAW WASTEWATER

Pollutant	Stream Code	Sample Type	Source	Concentrations (mg/l) Day 1	Day 2	Day 3	Average
sulfate	A-2	1		70			70
	J-3	1,2,2	<10	30	30	30	30
	Q-3	1		330			330
	R-4	6		190			190
	W-8	1	81	30	290	86	135
	W-9	1	81	670			670
	W-10	1	81	110			110
	W-11	1	81	70			70
total organic carbon (TOC)	A-2	1	9	14			14
	J-3	1,2,2	<1	<1	4	1	<2
	Q-3	1		3.4			3.4
	R-4	6		3.4			3.4
	W-8	1	0	40	56	11	36
	W-9	1	0	10			10
	W-10	1	0	1,200			1,200
	W-11	1	0	30			30
Conventional							
oil and grease	A-2	1		14			14
	J-3	1			4	5	5
	Q-3	1		<5			<5
	R-4	1		7	248	<5	<87
	W-8	1	6.6	*	96	22	39
	W-9	1	6.6	7.3			7.3
	W-10	1	6.6	5.1			5.1
	W-11	1	6.6	3.1			3.1
suspended solids	A-2	1	<1	4			4
	J-3	1,2,2	14	34	21	12	22
	Q-3	1		7			7
	R-4	6		240			240
	W-8	1	<1	8	15	3	9
	W-9	1	<1	6			6
	W-10	1	<1	17			17
	W-11	1	<1	4			4
pH (standard units)	J-3	1		7.8	7.5	7.8	
	C-3	1		8.2			
	R-4	1		7.9	7.9	8.2	
	W-8	1	7.7	7.7	7.4	7.9	
	W-9	1	7.7	8.4			
	W-10	1	7.7	9.6			
	W-11	1	7.7	7.8			

Table V-49

DRAWING SOLUTION HEAT TREATMENT CONTACT COOLING WATER

Plant	Water Use l/kkg	Water Use gal/ton	Percent Recycle	Wastewater l/kkg	Wastewater gal/ton
1	13,430	3,220	95	0	0
2	119.2	28.60	0	119.2	28.60
3	496.2	119.0	0	328.1	78.70
4	921.4	221.0	0	921.4	221.0
5	3,002	720.0	0	3,002	720.0
6	*	*	*	27,850	6,680
7	*	*	*	*	*
8	*	*	87.5	*	*
9	*	*	*	*	*
10	*	*	*	*	*
11	*	*	*	*	*

*Data not available.

Statistical Summary

Minimum	119.2	28.6	0	0
Maximum	13,430	3,220	27,850	6,680
Mean	3,593	861.7	5,370	1,288
Median	921.4	221.0	624.8	149.9
Sample:	5 of 11 plants		6 of 11 plants	
Nonzero Mean	3,593	861.7	6,446	1,546
Sample:	5 of 11 plants		5 of 11 plants	

Table V-50

FREQUENCY OF OCCURRENCE OF TOXIC POLLUTANTS
DRAWING SOLUTION HEAT TREATMENT CONTACT COOLING WATER
RAW WASTEWATER

	Pollutant	Analytical Quantification Level (mg/l)	Number of Streams Analyzed	Number of Samples Analyzed	Number of Times Observed in Samples (mg/l) ND-0.010	0.011-0.100	0.101-1.000	1.000+
1.	acenaphthene	0.010	2	6	4	2		
2.	acrolein	0.010	2	6	6			
3.	acrylonitrile	0.010	2	6	6			
4.	benzene	0.010	2	6	4	1		1
5.	benzidine	0.010	2	6	6			
6.	carbon tetrachloride	0.010	2	6	6			
7.	chlorobenzene	0.010	2	6	6			
8.	1,2,4-trichlorobenzene	0.010	2	6	6			
9.	hexachlorobenzene	0.010	2	6	6			
10.	1,2-dichloroethane	0.010	2	6	6			
11.	1,1,1-trichloroethane	0.010	2	6	6			
12.	hexachloroethane	0.010	2	6	6			
13.	1,1-dichloroethane	0.010	2	6	6			
14.	1,1,2-trichloroethane	0.010	2	6	6			
15.	1,1,2,2-tetrachloroethane	0.010	2	6	6			
16.	chloroethane	0.010	2	6	6			
17.	bis(chloromethyl)ether	0.010	2	6	6			
18.	bis(chloroethyl)ether	0.010	2	6	6			
19.	2-chloroethyl vinyl ether	0.010	2	6	6			
20.	2-chloronaphthalene	0.010	2	6	6			
21.	2,4,6-trichlorophenol	0.010	2	6	6			
22.	p-chloro-m-cresol	0.010	2	6	6			
23.	chloroform	0.010	2	6	4	1		1
24.	2-chlorophenol	0.010	2	6	6			
25.	1,2-dichlorobenzene	0.010	2	6	6			
26.	1,3-dichlorobenzene	0.010	2	6	6			
27.	1,4-dichlorobenzene	0.010	2	6	6			
28.	3,3'-dichlorobenzidine	0.010	2	6	6			
29.	1,1-dichloroethylene	0.010	2	6	6			
30.	1,2-trans-dichloroethylene	0.010	2	6	6			
31.	2,4-dichlorophenol	0.010	2	6	6			
32.	1,2-dichloropropane	0.010	2	6	6			
33.	1,3-dichloropropene	0.010	2	6	6			
34.	2,4-dimethylphenol	0.010	2	6	6			
35.	2,4-dinitrotoluene	0.010	2	6	6			
36.	2,6-dinitrotoluene	0.010	2	6	6			
37.	1,2-diphenylhydrazine	0.010	2	6	6			
38.	ethylbenzene	0.010	2	6	6			
39.	fluoranthene	0.010	2	6	6			

Table V-50 (Continued)

FREQUENCY OF OCCURRENCE OF TOXIC POLLUTANTS
DRAWING SOLUTION HEAT TREATMENT CONTACT COOLING WATER
RAW WASTEWATER

	Pollutant	Analytical Quantification Level (mg/l)	Number of Streams Analyzed	Number of Samples Analyzed	Number of Times Observed in Samples (mg/l) ND-0.010	0.011-0.100	0.101-1.000	1.000+
40.	4-chlorophenyl phenyl ether	0.010	2	6	6			
41.	4-bromophenyl phenyl ether	0.010	2	6	6			
42.	bis(2-chloroisopropyl)ether	0.010	2	6	6			
43.	bis(2-chloroethoxy)methane	0.010	2	6	6			
44.	methylene chloride	0.010	2	6	2	1	2	1
45.	methyl chloride (chloromethane)	0.010	2	6	6			
46.	methyl bromide (bromomethane)	0.010	2	6	6			
47.	bromoform (tribromomethane)	0.010	2	6	6			
48.	dichlorobromomethane	0.010	2	6	6			
49.	trichlorofluoromethane	0.010	2	6	6			
50.	dichlorodifluoromethane	0.010	2	6	6			
51.	chlorodibromomethane	0.010	2	6	6			
52.	hexachlorobutadiene	0.010	2	6	6			
53.	hexachlorocyclopentadiene	0.010	2	6	6			
54.	isophorone	0.010	2	6	6			
55.	naphthalene	0.010	2	6	6			
56.	nitrobenzene	0.010	2	6	6			
57.	2-nitrophenol	0.010	2	6	6			
58.	4-nitrophenol	0.010	2	6	6			
59.	2,4-dinitrophenol	0.010	2	6	6			
60.	4,6-dinitro-o-cresol	0.010	2	6	6			
61.	N-nitrosodimethylamine	0.010	2	6	6			
62.	N-nitrosodiphenylamine	0.010	2	6	6			
63.	N-nitrosodi-n-propylamine	0.010	2	6	6			
64.	pentachlorophenol	0.010	2	6	6			
65.	phenol	0.010	2	6	4	2		
66.	bis (2-ethylhexyl) phthalate	0.010	2	6	3	2	1	
67.	butyl benzyl phthalate	0.010	2	6	6			
68.	di-n-butyl phthalate	0.010	2	6	4	1	1	
69.	di-n-octyl phthalate	0.010	2	6	6			
70.	diethyl phthalate	0.010	2	6	4	1	1	
71.	dimethyl phthalate	0.010	2	6	4	2		
72.	benzo(a)anthracene	0.010	2	6	6			
73.	benzo(a)pyrene	0.010	2	6	6			
74.	benzo(b)fluoranthene	0.010	2	6	6			
75.	benzo(k)fluoranthene	0.010	2	6	6			
76.	chrysene	0.010	2	6	6			
77.	acenaphthylene	0.010	2	6	6			
78.	anthracene (a)	0.010	2	6	6			

Table V-50 (Continued)

FREQUENCY OF OCCURRENCE OF TOXIC POLLUTANTS
DRAWING SOLUTION HEAT TREATMENT CONTACT COOLING WATER
RAW WASTEWATER

	Pollutant	Analytical Quantification Level (mg/l)	Number of Streams Analyzed	Number of Samples Analyzed	Number of Times Observed in Samples (mg/l) ND-0.010	0.011-0.100	0.101-1.000	1.000+
79.	benzo(ghi)perylene	0.010	2	6	6			
80.	fluorene	0.010	2	6	6			
81.	phenanthrene (a)	0.010	-	-				
82.	dibenzo(a,h)anthracene	0.010	2	6	6			
83.	indeno (1,2,3-c,d)pyrene	0.010	2	6	6			
84.	pyrene	0.010	2	6	6			
85.	tetrachloroethylene	0.010	2	6	5			1
86.	toluene	0.010	2	6	2	3	1	
87.	trichloroethylene	0.010	2	6	5			1
88.	vinyl chloride (chloroethylene)	0.010	2	6	6			
89.	aldrin	0.005	2	4	4			
90.	dieldrin	0.005	2	4	4			
91.	chlordane	0.005	2	4	4			
92.	4,4'-DDT	0.005	2	4	4			
93.	4,4'-DDE	0.005	2	4	4			
94.	4,4'-DDD	0.005	2	4	4			
95.	alpha-endosulfan	0.005	2	4	4			
96.	beta-endosulfan	0.005	2	4	4			
97.	endosulfan sulfate	0.005	2	4	4			
98.	endrin	0.005	2	4	4			
99.	endrin aldehyde	0.005	2	4	4			
100.	heptachlor	0.005	2	4	4			
101.	heptachlor epoxide	0.005	2	4	4			
102.	alpha-BHC	0.005	2	4	4			
103.	beta-BHC	0.005	2	4	4			
104.	gamma-BHC	0.005	2	4	4			
105.	delta-BHC	0.005	2	4	4			
106.	PCB-1242 (b)	0.005	2	4	4			
107.	PCB-1254 (b)	0.005	-	-				
108.	PCB-1221 (b)	0.005	-	-				
109.	PCB-1232 (b)	0.005	-	-				
110.	PCB-1248 (c)	0.005	2	4	4			
111.	PCB-1260 (c)	0.005	-	-				
112.	PCB-1016 (c)	0.005	-	-				
113.	toxaphene	0.005	2	4	4			
114.	antimony	0.100	4	12	11	1		
115.	arsenic	0.010	4	12	9	2	1	
116.	asbestos	10 MFL	0	0				

Table V-50 (Continued)

FREQUENCY OF OCCURRENCE OF TOXIC POLLUTANTS
DRAWING SOLUTION HEAT TREATMENT CONTACT COOLING WATER
RAW WASTEWATER

Pollutant	Analytical Quantification Level (mg/l)	Number of Streams Analyzed	Number of Samples Analyzed	Number of Times Observed in Samples (mg/l)			
				ND-0.010	0.011-0.100	0.101-1.000	1.000+
117. beryllium	0.010	4	12	12			
118. cadmium	0.002	4	12	12			
119. chromium (total)	0.005	4	12	10	2		
120. copper	0.009	4	12	3	9		
121. cyanide (total)	0.010	4	12	3	6		3
122. lead	0.020	4	12	6	5	1	
123. mercury	0.0001	4	12	11	1		
124. nickel	0.005	4	12	10	2		
125. selenium	0.01	4	12	9	3		
126. silver	0.02	4	12	8	4		
127. thallium	0.100	4	12	12			
128. zinc	0.050	4	12	3	3	6	
129. 2,3,7,8-tetrachlorodibenzo-p-dioxin	0.005	0	0				

(a), (b), (c) Reported together.

Table V-51

SAMPLING DATA
DRAWING SOLUTION HEAT TREATMENT CONTACT COOLING WATER
RAW WASTEWATER

Pollutant	Stream Code	Sample Type	Source	Concentrations (mg/l) Day 1	Day 2	Day 3	Average
Toxic Pollutants							
1. acenaphthene	E-4	1	*	ND	ND	0.012	0.012
	V-4	2	ND	ND	0.018	ND	0.018
4. benzene	E-4	1	ND	6.300	*	ND	3.154
	V-4	1	0.004	0.064	*	*	0.026
11. 1,1,1-trichloroethane	E-4	1	ND	ND	*	ND	*
	V-4	1	ND	*	*	*	*
23. chloroform	E-4	1	<0.100	35.000	0.030	*	11.677
	V-4	1	ND	*	ND	ND	*
38. ethylbenzene	E-4	1	ND	ND	ND	ND	
	V-4	1	ND	ND	*	*	*
44. methylene chloride	E-4	1	0.017	92.00	0.170	0.120	30.763
	V-4	1	0.015	0.056	*	*	0.025
65. phenol	E-4	1	*	ND	ND	0.031	0.031
	V-4	2	ND	0.021	ND	ND	0.021
66. bis(2-ethylhexyl phthalate)	E-4	1	*	0.840	0.036	0.048	0.308
	V-4	2	0.008	ND	*	*	*
68. di-n-butyl phthalate	E-4	1	*	0.990	ND	*	0.495
	V-4	2	ND	ND	0.017	ND	0.017
70. diethyl phthalate	E-4	1	*	0.470	ND	ND	0.470
	V-4	2	ND	ND	0.033	ND	0.033
71. dimethyl phthalate	E-4	1	*	ND	ND	0.050	0.050
	V-4	2	ND	ND	0.011	ND	0.011
85. tetrachloroethylene	E-4	1	ND	12.000	ND	*	6.000
	V-4	1	ND	ND	ND	ND	
86. toluene	E-4	1	ND	0.95	*	ND	0.475
	V-4	1	0.002	0.014	0.041	0.029	0.028
87. trichloroethylene	E-4	1	ND	1.300	ND	*	0.650
	V-4	1	ND	ND	ND	ND	

Table V-51 (Continued)

SAMPLING DATA
DRAWING SOLUTION HEAT TREATMENT CONTACT COOLING WATER
RAW WASTEWATER

Pollutant	Stream Code	Sample Type	Source	Concentrations (mg/l) Day 1	Day 2	Day 3	Average
114. antimony	E-4	1	<0.100	<0.200	<0.100	<0.100	<0.133
	V-4	2	<0.001	<0.001	0.001	<0.001	<0.001
	W-2	2	0.003	0.002	<0.001	<0.001	<0.001
	W-3	2	0.003	0.004	0.030	<0.001	<0.012
115. arsenic	E-4	1	<0.01	<0.01	<0.01	<0.01	<0.01
	V-4	2	<0.005	<0.005	0.24	<0.005	<0.08
	W-2	2	<0.005	<0.005	0.010	<0.005	<0.007
	W-3	2	<0.005	0.006	0.011	0.012	0.010
118. cadmium	E-4	1	<0.002	<0.002	<0.002	<0.002	<0.002
	V-4	2	<0.001	<0.001	0.001	<0.001	<0.001
	W-2	2	<0.001	<0.001	0.001	<0.001	<0.001
	W-3	2	<0.001	<0.001	0.002	0.002	<0.002
119. chromium	E-4	1	<0.005	<0.005	0.01	<0.005	<0.01
	V-4	2	<0.001	0.002	0.004	0.004	0.003
	W-2	2	0.004	0.003	0.015	0.003	0.007
	W-3	2	0.004	0.013	0.004	0.009	0.009
120. copper	E-4	1	<0.009	0.020	<0.009	0.020	<0.016
	V-4	2	0.027	0.012	0.015	0.010	0.012
	W-2	2	0.010	0.018	0.017	0.009	0.015
	W-3	2	0.010	0.070	0.011	0.070	0.050
121. cyanide	E-4	1		1.3	1.38	1.26	1.3
	V-4	1	0.0042	0.0042	0.0022	0.0080	0.0048
	W-2	2	0.030	0.017	0.024	0.018	0.020
	W-3	2	0.030	0.042	0.020	0.027	0.030
122. lead	E-4	1	<0.020	<0.020	<0.020	<0.020	<0.020
	V-4	2	0.079	<0.001	0.004	<0.001	<0.002
	W-2	2	0.009	0.047	0.034	0.021	0.034
	W-3	2	0.009	0.042	0.180	0.011	0.078
123. mercury	E-4	1	0.004	0.02	0.01	0.0003	0.01
	V-4	2	<0.0002	<0.0002	<0.0002	<0.0002	<0.0002
	W-2	2	<0.0002	<0.0002	<0.0002	<0.0002	<0.0002
	W-3	2	<0.0002	<0.0002	<0.0002	<0.0002	<0.0002
124. nickel	E-4	1	<0.005	<0.005	<0.005	<0.005	<0.005
	V-4	2	0.009	0.006	0.004	0.003	0.004
	W-2	2	0.060	<0.001	0.019	0.007	<0.009
	W-3	2	0.060	<0.001	<0.001	0.013	<0.005

Table V-51 (Continued)

SAMPLING DATA
DRAWING SOLUTION HEAT TREATMENT CONTACT COOLING WATER
RAW WASTEWATER

Pollutant	Stream Code	Sample Type	Source	Concentrations (mg/l) Day 1	Day 2	Day 3	Average
125. selenium	E-4	1	<0.01	<0.01	<0.01	<0.01	<0.01
	V-4	2	0.020	0.031	0.007	<0.005	<0.014
	W-2	2	0.015	0.051	0.017	<0.005	<0.024
	W-3	2	0.015	<0.005	<0.005	<0.005	<0.005
126. silver	E-4	1	<0.02	<0.04	<0.02	<0.02	<0.03
	V-4	2	0.05	0.05	<0.001	<0.001	<0.02
	W-2	2	0.02	0.04	<0.001	<0.001	<0.01
	W-3	2	0.02	0.05	0.02	<0.001	<0.02
128. zinc	E-4	1	<0.050	<0.050	<0.050	<0.050	<0.050
	V-4	2	0.50	0.02	0.04	0.04	0.03
	W-2	2	0.03	0.21	0.19	0.22	0.21
	W-3	2	0.03	0.32	0.11	0.40	0.28
Nonconventional							
alkalinity	E-4	1		340	400	370	370
	V-4	2		280	280	280	280
	W-2	2	170	140	240	250	210
	W-3	2	170	250	240	250	250
aluminum	E-4	1	<0.09	<0.295	<0.845	<0.395	<0.512
	V-4	2	0.09	0.10	0.21	0.12	0.14
	W-2	2	0.06	0.92	0.97	0.96	0.95
	W-3	2	0.06	2.6	0.32	2.6	1.8
calcium	E-4	1	68	35	22	36	31
	V-4	2	9.8	860	78	76	338
	W-2	2	55	35	34	59	43
	W-3	2	55	66	56	36	53
chemical oxygen demand (COD)	E-4	1	<5	79,600	98,400	97,700	91,900
	V-4	2	<1	12	32	32	25
	W-2	1	12	1,900	1,500	1,900	1,800
	W-3	1	12	1,200	1,000	1,100	1,100
dissolved solids	E-4	1		5,005	8,326	13,500	8,944
	V-4	2		400	420	410	410
	W-2	2	3	680	780	780	750
	W-3	2	3	680	730	740	720

Table V-51 (Continued)

SAMPLING DATA
DRAWING SOLUTION HEAT TREATMENT CONTACT COOLING WATER
RAW WASTEWATER

Pollutant	Stream Code	Sample Type	Source	Concentrations (mg/l) Day 1	Day 2	Day 3	Average
magnesium	E-4	1	3.8	26	<9.05	30	<22
	V-4	2	63	60	55	54	56
	W-2	2	19	51	36	33	40
	W-3	2	19	21	4.4	27	17
phenolics (total by 4-AAP method)	E-4	1		0.005		0.005	0.005
	V-4	1	0.062	0.009	0.007	0.025	0.014
	W-2	1	1.00	0.150	0.400	0.300	0.283
	W-3	1	1.00	0.800	0.720	0.900	0.807
sulfate	E-4	1		400	280	298	326
	V-4	2		32	23	29	28
	W-2	2	81	98	100	97	98
	W-3	2	81	100	100	85	95
total organic carbon (TOC)	E-4	1	1	20,000	20,300	18,400	19,600
	V-4	2	4.7	14	8.2	28	17
	W-2	1	0	660	690	900	750
	W-3	1	0	450	110	500	350
Conventional							
oil and grease	E-4	1		17	18	26	20
	V-4	1	16		6.3	8.0	7.2
	W-2	1	6.6	350	370	120	280
	W-3	1	6.6	150	120	120	130
suspended solids	E-4	1	<1	21	19	17	19
	V-4	2		12	13	7	11
	W-2	2	<1	98	93	87	93
	W-3	2	<1	57	39	50	49
pH (standard units)	E-4	1		7.9	8.2	8.4	
	V-4	1	7.3	7.3	7.5	7.4	
	W-2	1	7.7	8.7			
	W-3	1	7.7	7.8	7.7		

Table V-52

CLEANING OR ETCHING BATH

Plant	Water Use l/kkg	Water Use gal/ton	Recycle	Wastewater l/kkg	Wastewater gal/ton
1	*	*	**	0	0
2	*	*	**	0	0
3	*	*	**	0	0
4	*	*	**	0	0
5	*	*	**	0	0
6	*	*	**	0	0
7	*	*	**	0	0
8	*	*	**	0	0
9	*	*	**	0.9	0.22
10	*	*	**	1.430	0.3430
11	*	*	**	5.816	1.395
12	*	*	**	8.406	2.016
13	*	*	**	9.498	2.278
14	*	*	**	28.35	6.800
15	*	*	**	38.0	9.0
16	*	*	**	69.0	17.0
17	*	*	**	121.0	29.0
18	*	*	**	156.0	51.5
19	*	*	**	192.4	46.15
20	*	*	**	280.0	67.0
21	*	*	**	346.4	83.08
22	*	*	**	355.0	85.0
23	*	*	**	446.5	107.1
24	*	*	**	800.5	192.0

*Data not available.
**Not applicable.

Statistical Summary

Minimum	0	0
Maximum	800.5	192
Mean	119.13	28.33
Median	8.95	2.15
Sample:	24 of 24 plants	
Nonzero Mean	178.7	42.9
Sample:	16 of 24 plants	
Nonzero Mean (Proposal)	204.4	49.02
Sample:	9 of 10 plants	

Table V-52 (Continued)

CLEANING OR ETCHING BATH

Note: This table includes only plants that discharge or haul away the baths and provided enough data for calculation of the wastewater value.

Note: This table individually lists data from four plants which have both cleaning and etch line bath discharges.

Table V-53

FREQUENCY OF OCCURRENCE OF TOXIC POLLUTANTS
CLEANING OR ETCHING BATH
RAW WASTEWATER

	Pollutant	Analytical Quantification Level (mg/l)	Number of Streams Analyzed	Number of Samples Analyzed	Number of Times Observed in Samples (mg/l) ND-0.010	0.011-0.100	0.101-1.000	1.000+
1.	acenaphthene	0.010	6	6	6			
2.	acrolein	0.010	4	4	4			
3.	acrylonitrile	0.010	4	4	4			
4.	benzene	0.010	4	4	4			
5.	benzidine	0.010	6	6	6			
6.	carbon tetrachloride	0.010	4	4	4			
7.	chlorobenzene	0.010	4	4	4			
8.	1,2,4-trichlorobenzene	0.010	6	6	6			
9.	hexachlorobenzene	0.010	6	6	6			
10.	1,2-dichloroethane	0.010	4	4	4			
11.	1,1,1-trichloroethane	0.010	4	4	4			
12.	hexachloroethane	0.010	6	6	6			
13.	1,1-dichloroethane	0.010	4	4	4			
14.	1,1,2-trichloroethane	0.010	4	4	4			
15.	1,1,2,2-tetrachloroethane	0.010	4	4	4			
16.	chloroethane	0.010	4	4	4			
17.	bis(chloromethyl)ether	0.010	4	4	4			
18.	bis(chloroethyl)ether	0.010	6	6	6			
19.	2-chloroethyl vinyl ether	0.010	4	4	4			
20.	2-chloronaphthalene	0.010	6	6	6			
21.	2,4,6-trichlorophenol	0.010	6	6	6			
22.	p-chloro-m-cresol	0.010	6	6	5	1		
23.	chloroform	0.010	4	4	3	1		
24.	2-chlorophenol	0.010	6	6	6			
25.	1,2-dichlorobenzene	0.010	6	6	6			
26.	1,3-dichlorobenzene	0.010	6	6	6			
27.	1,4-dichlorobenzene	0.010	6	6	6			
28.	3,3'-dichlorobenzidine	0.010	6	6	6			
29.	1,1-dichloroethylene	0.010	4	4	4			
30.	1,2-trans-dichloroethylene	0.010	4	4	4			
31.	2,4-dichlorophenol	0.010	6	6	6			
32.	1,2-dichloropropane	0.010	4	4	4			
33.	1,3-dichloropropene	0.010	4	4	4			
34.	2,4-dimethylphenol	0.010	6	6	5	1		
35.	2,4-dinitrotoluene	0.010	6	6	6			
36.	2,6-dinitrotoluene	0.010	6	6	6			
37.	1,2-diphenylhydrazine	0.010	6	6	6			
38.	ethylbenzene	0.010	4	4	4			
39.	fluoranthene	0.010	6	6	5	1		

Table V-53 (Continued)

FREQUENCY OF OCCURRENCE OF TOXIC POLLUTANTS
CLEANING OR ETCHING BATH
RAW WASTEWATER

	Pollutant	Analytical Quantification Level (mg/l)	Number of Streams Analyzed	Number of Samples Analyzed	Number of Times Observed in Samples (mg/l) ND-0.010	0.011-0.100	0.101-1.000	1.000+
40.	4-chlorophenyl phenyl ether	0.010	6	6	6			
41.	4-bromophenyl phenyl ether	0.010	6	6	6			
42.	bis(2-chloroisopropyl)ether	0.010	6	6	6			
43.	bis(2-chloroethoxy)methane	0.010	6	6	6			
44.	methylene chloride	0.010	4	4	1	3		
45.	methyl chloride (chloromethane)	0.010	4	4	4			
46.	methyl bromide (bromomethane)	0.010	4	4	4			
47.	bromoform (tribromomethane)	0.010	4	4	4			
48.	dichlorobromomethane	0.010	4	4	4			
49.	trichlorofluoromethane	0.010	4	4	4			
50.	dichlorodifluoromethane	0.010	4	4	4			
51.	chlorodibromomethane	0.010	4	4	4			
52.	hexachlorobutadiene	0.010	6	6	6			
53.	hexachlorocyclopentadiene	0.010	6	6	6			
54.	isophorone	0.010	6	6	6			
55.	naphthalene	0.010	6	6	6			
56.	nitrobenzene	0.010	6	6	6			
57.	2-nitrophenol	0.010	6	6	6			
58.	4-nitrophenol	0.010	6	6	6			
59.	2,4-dinitrophenol	0.010	6	6	4		1	1
60.	4,6-dinitro-o-cresol	0.010	6	6	6			
61.	N-nitrosodimethylamine	0.010	6	6	6			
62.	N-nitrosodiphenylamine	0.010	6	6	6			
63.	N-nitrosodi-n-propylamine	0.010	6	6	6			
64.	pentachlorophenol	0.010	6	6	5	1		
65.	phenol	0.010	6	6	3	3		
66.	bis (2-ethylhexyl) phthalate	0.010	6	6	3	3		
67.	butyl benzyl phthalate	0.010	6	6	6			
68.	di-n-butyl phthalate	0.010	6	6	4	2		
69.	di-n-octyl phthalate	0.010	6	6	5	1		
70.	diethyl phthalate	0.010	6	6	5	1		
71.	dimethyl phthalate	0.010	6	6	5	1		
72.	benzo(a)anthracene	0.010	6	6	6			
73.	benzo(a)pyrene	0.010	6	6	6			
74.	benzo(b)fluoranthene	0.010	6	6	6			
75.	benzo(k)fluoranthene	0.010	6	6	6			
76.	chrysene	0.010	6	6	6			
77.	acenaphthylene	0.010	6	6	6			
78.	anthracene (a)	0.010	6	6	6			

Table V-53 (Continued)

FREQUENCY OF OCCURRENCE OF TOXIC POLLUTANTS
CLEANING OR ETCHING BATH
RAW WASTEWATER

	Pollutant	Analytical Quantification Level (mg/l)	Number of Streams Analyzed	Number of Samples Analyzed	Number of Times Observed in Samples (mg/l) ND-0.010	0.011-0.100	0.101-1.000	1.000+
79.	benzo(ghi)perylene	0.010	6	6	6			
80.	fluorene	0.010	6	6	6			
81.	phenanthrene (a)	0.010	-	-	6			
82.	dibenzo(a,h)anthracene	0.010	6	6	6			
83.	indeno (1,2,3-c,d)pyrene	0.010	6	6	6			
84.	pyrene	0.010	6	6	6			
85.	tetrachloroethylene	0.010	4	4	4			
86.	toluene	0.010	4	4	4			
87.	trichloroethylene	0.010	4	4	4			
88.	vinyl chloride (chloroethylene)	0.010	4	4	4			
89.	aldrin	0.005	6	6	6			
90.	dieldrin	0.005	6	6	6			
91.	chlordane	0.005	6	6	6			
92.	4,4'-DDT	0.005	6	6	6			
93.	4,4'-DDE	0.005	6	6	6			
94.	4,4'-DDD	0.005	6	6	6			
95.	alpha-endosulfan	0.005	6	6	6			
96.	beta-endosulfan	0.005	6	6	6			
97.	endosulfan sulfate	0.005	6	6	6			
98.	endrin	0.005	6	6	6			
99.	endrin aldehyde	0.005	6	6	6			
100.	heptachlor	0.005	6	6	6			
101.	heptachlor epoxide	0.005	6	6	6			
102.	alpha-BHC	0.005	6	6	6			
103.	beta-BHC	0.005	6	6	6			
104.	gamma-BHC	0.005	6	6	6			
105.	delta-BHC	0.005	6	6	6			
106.	PCB-1242 (b)	0.005	6	6	6			
107.	PCB-1254 (b)	0.005	-	-				
108.	PCB-1221 (b)	0.005	-	-				
109.	PCB-1232 (b)	0.005	-	-				
110.	PCB-1248 (c)	0.005	6	6	6			
111.	PCB-1260 (c)	0.005	-	-				
112.	PCB-1016 (c)	0.005	-	-				
113.	toxaphene	0.005	6	6	6			
114.	antimony	0.100	15	20	12	4	4	
115.	arsenic	0.010	15	20	6	1	6	7
116.	asbestos	10 MFL	0	0				

Table V-53 (Continued)

FREQUENCY OF OCCURRENCE OF TOXIC POLLUTANTS
CLEANING OR ETCHING BATH
RAW WASTEWATER

Pollutant	Analytical Quantification Level (mg/l)	Number of Streams Analyzed	Number of Samples Analyzed	Number of Times Observed in Samples (mg/l)			
				ND-0.010	0.011-0.100	0.101-1.000	1.000+
117. beryllium	0.010	14	19	18		1	
118. cadmium	0.002	14	19	17	1		1
119. chromium (total)	0.005	14	19	5	2	2	10
120. copper	0.009	14	19	5	3	5	6
121. cyanide (total)	0.010	17	22	16	4	2	
122. lead	0.020	14	19	12		5	2
123. mercury	0.0001	14	19	18	1		
124. nickel	0.005	14	19	6	4	5	4
125. selenium	0.01	17	22	19	3		
126. silver	0.02	15	20	18	2		
127. thallium	0.100	15	20	20			
128. zinc	0.050	14	19	2	4	11	2
129. 2,3,7,8-tetrachlorodibenzo-p-dioxin	0.005	0	0				

(a), (b), (c) Reported together.

Table V-54

SAMPLING DATA
CLEANING OR ETCHING BATH
RAW WASTEWATER

Pollutant	Stream Code	Sample Type	Source	Concentrations (mg/l) Day 1	Day 2	Day 3	Average
Toxic Pollutants							
22. parachlorometa cresol	A-6	1	ND	0.021			0.021
	A-7	1	ND	ND			
	B-11	1	ND	ND			
	B-12	1	ND	*			*
	C-10	1	ND	ND			
	C-11	1	ND	ND			
23. chloroform	B-11	1	0.010	*			*
	B-12	1	0.010	*			*
	C-10	1	0.055	*			*
	C-11	1	0.055	0.020			0.020
34. 2,4-dimethylphenol	A-6	1	ND	ND			
	A-7	1	ND	ND			
	B-11	1	ND	*			*
	B-12	1	ND	*			*
	C-10	1	ND	ND			
	C-11	1	ND	0.034			0.034
39. fluoranthene	A-6	1	ND	*			*
	A-7	1	ND	ND			
	B-11	1	ND	*			*
	B-12	1	ND	0.018			0.018
	C-10	1	ND	ND			
	C-11	1	ND	ND			
44. methylene chloride	B-11	1	*	0.062			0.062
	B-12	1	*	*			*
	C-10	1	0.220	0.039			0.039
	C-11	1	0.220	0.015			0.015
59. 2,4-dinitrophenol	A-6	1	ND	2.900			2.900
	A-7	1	ND	ND			
	B-11	1	ND	0.146			0.146
	B-12	1	ND	*			*
	C-10	1	ND	ND			
	C-11	1	ND	ND			
64. pentachlorophenol	A-6	1	ND	ND			
	A-7	1	ND	ND			
	B-11	1	ND	*			*
	B-12	1	ND	0.012			0.012
	C-10	1	ND	ND			
	C-11	1	ND	ND			

Table V-54 (Continued)

SAMPLING DATA
CLEANING OR ETCHING BATH
RAW WASTEWATER

Pollutant	Stream Code	Sample Type	Source	Concentrations (mg/l) Day 1	Day 2	Day 3	Average
65. phenol	A-6	1		0.0160			0.0160
	A-7	1		0.035			0.035
	B-11	1		ND			
	B-12	1		0.0160			0.0160
	C-10	1	ND	ND			
	C-11	1	ND	ND			
66. bis(2-ethylhexyl) phthalate	A-6	1	0.200	0.033			0.033
	A-7	1	0.200	0.025			0.025
	B-11	1	*	*			*
	B-12	1	*	*			*
	C-10	1	*	0.021			0.021
	C-11	1	*	ND			
68. di-n-butyl phthalate	A-6	1	0.076	0.032			0.032
	A-7	1	0.076	0.012			0.012
	B-11	1	*	*			*
	B-12	1	*	*			*
	C-10	1	*	*			*
	C-11	1	*	ND			
69. di-n-octyl phthalate	A-6	1	ND	*			*
	A-7	1	ND	ND			
	B-11	1	ND	ND			
	B-12	1	ND	ND			
	C-10	1	ND	ND			
	C-11	1	ND	0.050			0.050
70. diethyl phthalate	A-6	1	ND	ND			
	A-7	1	ND	ND			
	B-11	1	*	*			*
	B-12	1	*	ND			
	C-10	1	*	*			*
	C-11	1	*	0.036			0.036
71. dimethyl phthalate	A-6	1	ND	ND			
	A-7	1	ND	ND			
	B-11	1	ND	ND			
	B-12	1	ND	0.013			0.013
	C-10	1	ND	ND			
	C-11	1	ND	ND			

Table V-54 (Continued)

SAMPLING DATA
CLEANING OR ETCHING BATH
RAW WASTEWATER

Pollutant	Stream Code	Sample Type	Source	Concentrations (mg/l) Day 1	Day 2	Day 3	Average
99. endrin aldehyde	A-6	1	ND	ND			
	A-7	1	ND	ND			
	B-11	1	ND	ND			
	B-12	1	ND	**			**
	C-10	1	**	**			**
	C-11	1	**	0.0052			0.0052
114. antimony	BB-3	1	<0.025			<0.100*	<0.100
	BB-5	8	<0.025	0.390	0.420	0.420	0.410
	BB-7	1	<0.025	<0.010			<0.010
	BB-9	1	<0.025		<0.010		<0.010
	CC-4	1	<0.010	<0.10			<0.10
	DD-4	1	<0.002	0.860			0.860
	DD-6	8	<0.002	<0.020**	<0.020**	<0.020**	0.020
	DD-8	1	<0.002		0.019		0.019
	DD-9	1	<0.002			<0.002	<0.002
	EE-1	9	<0.002	0.058			0.058
	EE-3	8	<0.002		0.080	0.045	0.063
115. arsenic	B-11	1	<0.010	0.14			0.14
	B-12	1	<0.010	<0.01			<0.01
	C-10	1	<0.020	0.01			0.01
	C-11	1	<0.020	<0.02			<0.02
	BB-3	1	<0.010			0.320	0.320
	BB-5	8	<0.010	5.000	5.100	4.700	4.933
	BB-7	1	<0.010	<0.010			<0.010
	BB-9	1	<0.010		<0.010		<0.010
	CC-4	1	<0.010	<0.010			<0.010
	DD-4	1	<0.001	0.017			0.017
	DD-6	8	<0.001	0.154	2.35	26.5	9.67
	DD-8	1	<0.001		2.18		2.18
	DD-9	1	<0.001			1.5	1.5
	EE-1	9	<0.021	0.315			0.315
	EE-3	8	<0.021		0.210	0.126	0.168
117. beryllium	BB-3	1	<0.015			<0.050	<0.050
	BB-5	8	<0.015	<0.050	<0.050	<0.050	<0.050
	BB-7	1	<0.015	<0.005			<0.005
	BB-9	1	<0.015		<0.005		<0.005
	CC-4	1	<0.005	<0.005			<0.005
	DD-4	1	<0.010	0.105			0.105
	DD-6	8	<0.010	<0.010	<0.010	<0.010	<0.010
	DD-8	1	<0.010		<0.010		<0.010
	DD-9	1	<0.010			<0.010	<0.010
	EE-1	9	<0.010	<0.010			<0.010
	EE-3	8	<0.010		<0.010	<0.010	<0.010

Table V-54 (Continued)

SAMPLING DATA
CLEANING OR ETCHING BATH
RAW WASTEWATER

Pollutant	Stream Code	Sample Type	Source	Concentrations (mg/l) Day 1	Day 2	Day 3	Average
118. cadmium	B-11	1	ND	0.050			0.050
	C-10	1	<0.002	0.005			0.005
	C-11	1	<0.002	3.000			3.000
	BB-3	1	<0.060			<0.200	<0.200
	BB-5	8	<0.060	<0.200	<0.200	<0.200	<0.200
	BB-7	1	<0.060	<0.020			<0.020
	BB-9	1	<0.060		<0.020		<0.020
	CC-4	1	<0.020	<0.020			<0.020
	DD-4	1	<0.010	<0.010			<0.010
	DD-6	8	<0.010	<0.010	<0.010	<0.010	<0.010
	DD-8	1	<0.010		<0.010		<0.010
	DD-9	1	<0.010			<0.010	<0.010
	EE-1	9	<0.010	<0.010			<0.010
	EE-3	8	<0.010		<0.010	<0.010	<0.010
119. chromium	B-11	1	ND	0.020			0.020
	C-10	1	0.007	0.400			0.400
	C-11	1	0.007	10.00			10.00
	BB-3	1	<0.060			<0.200	<0.200
	BB-5	8	<0.060	2.600	2.600	2.800	2.667
	BB-7	1	<0.060	<0.020			<0.020
	BB-9	1	<0.060		<0.020		<0.020
	CC-4	1	<0.020	<0.020			<0.020
	DD-4	1	<0.020	<0.100			<0.100
	DD-6	8	<0.020	1.44	2.77	1.60	1.94
	DD-8	1	<0.020		1.14		1.14
	DD-9	1	<0.020			1.6	1.6
	EE-1	9	<0.021	0.025			0.025
	EE-3	8	<0.021		1.05	0.563	0.807
120. copper	B-11	1	ND	20			20
	C-10	1	0.020	20			20
	C-11	1	0.02000	<5.00			<5.00
	BB-3	1	<0.150			0.500	0.500
	BB-5	8	<0.150	13.5	13.0	11.5	12.667
	BB-7	1	<0.150	<0.050			<0.050
	BB-9	1	<0.150		<0.050		<0.050
	CC-4	1	<0.050	<0.050			<0.050
	DD-4	1	0.013	0.173			0.173
	DD-6	8	0.013	0.049	0.020	0.028	0.032
	DD-8	1	0.013		<0.010		<0.010
	DD-9	1	0.013			1.63	1.63
	EE-1	9	<0.010	0.684			0.684
	EE-3	8	<0.010		0.131	0.110	0.121

Table V-54 (Continued)

SAMPLING DATA
CLEANING OR ETCHING BATH
RAW WASTEWATER

Pollutant	Stream Code	Sample Type	Source	Concentrations (mg/l) Day 1	Day 2	Day 3	Average
121. cyanide	A-6	1	ND	0.408			0.408
	A-7	1	ND	0.082			0.082
	B-11	1	ND	0.196			0.196
	B-12	1	ND	0.003			0.003
	C-10	1	ND	0.054			0.054
	C-11	1	ND	<0.001			<0.001
	BB-3	1	<0.02			<0.02	<0.02
	BB-5	8	<0.02	<0.02	<0.02	<0.02	<0.02
	BB-7	1	<0.02	<0.02			<0.02
	BB-9	1	<0.02		<0.02		<0.02
	CC-4	1	<0.02	<0.02			<0.02
	DD-4	1	<0.02	0.063			0.063
	DD-6	8	<0.02	<0.02	<0.02	<0.02	<0.02
	DD-8	1	<0.02		<0.02		<0.02
	DD-9	1	<0.02			<0.02	<0.02
	EE-1	9	<0.02	0.033			0.033
	EE-3	8	<0.02		<0.02	<0.02	<0.02
122. lead	B-11	1	ND	2.000			2.000
	C-10	1	0.030	0.400			0.400
	C-11	1	0.030	90.0			90.0
	BB-3	1	<0.150			<0.500	<0.500
	BB-5	8	<0.150	<5.000	<5.000	<5.000	<5.000
	BB-7	1	<0.150	0.200			0.200
	BB-9	1	<0.150		<0.500		<0.500
	CC-4	1	<0.050	<0.050			<0.050
	DD-4	1	<0.100	<0.100			<0.100
	DD-6	8	<0.100	0.796	0.740	0.819	0.785
	DD-8	1	<0.100		<0.10		<0.10
	DD-9	1	<0.100			<0.100	<0.100
	EE-1	9	<0.100	<0.100			<0.100
	EE-3	8	<0.100		<0.100	<0.100	<0.100
123. mercury	B-11	1	ND	0.0004			0.0004
	C-10	1	0.0004	0.001			0.001
	C-11	1	0.0004	0.020			0.020
	BB-3	1	<0.0002			<0.0002	<0.0002
	BB-5	8	<0.0002	0.0017	0.0013	0.0011	0.0014
	BB-7	1	<0.0002	<0.0002			<0.0002
	BB-9	1	<0.0002		<0.0002		<0.0002
	CC-4	1	0.0004	<0.0002			<0.0002
	DD-4	1	<0.005	<0.005			<0.005
	DD-6	8	<0.005	<0.005	<0.005	<0.005	<0.005
	DD-8	1	<0.005		<0.005		<0.005
	DD-9	1	<0.005			<0.005	<0.005
	EE-1	9	<0.005	<0.005			<0.005
	EE-3	8	<0.005		<0.005	<0.005	<0.005

Table V-54 (Continued)

SAMPLING DATA
CLEANING OR ETCHING BATH
RAW WASTEWATER

Pollutant	Stream Code	Sample Type	Source	Concentrations (mg/l) Day 1	Day 2	Day 3	Average
124. nickel	B-11	1	ND	0.100			0.100
	C-10	1	0.030	0.500			0.500
	C-11	1	0.030	<3.000			<3.000
	BB-3	1	<0.150			<0.500	<0.500
	BB-5	8	<0.150	2.000	2.000	2.000	2.000
	BB-7	1	<0.150	<0.050			<0.050
	BB-9	1	<0.150		486		486
	CC-4	1	<0.050	<0.050			<0.050
	DD-4	1	<0.050	<0.020			<0.020
	DD-6	8	<0.050	0.235	0.126	0.114	0.158
	DD-8	1	<0.050		0.518		0.518
	DD-9	1	<0.050			<0.020	<0.020
	EE-1	9	<0.020	0.034			0.034
	EE-3	8	<0.020		0.059	0.076	0.068
125. selenium	BB-3	1	<0.010			<0.050*	<0.050*
	BB-5	8	<0.010	Chemical	Interference	<0.100*	<0.100(?)
	BB-7	1	<0.010	<0.010			<0.010
	BB-9	1	<0.010		<0.010		<0.010
	CC-4	1	<0.010	<0.010			<0.010
	DD-4	1	<0.005	<0.005			<0.005
	DD-6	8	<0.005	0.025	0.026	0.026	0.026
	DD-8	1	<0.005		0.006		0.006
	DD-9	1	<0.005			<0.005	<0.005
	EE-1	9	<0.005	<0.005			<0.005
	EE-3	8	<0.005		<0.005	<0.005	<0.005
126. silver	BB-3	1	<0.010			<0.010	<0.010
	BB-5	8	<0.010	<0.010	<0.010	<0.010	<0.010
	BB-7	1	<0.010	<0.010			<0.010
	BB-9	1	<0.010		<0.010		<0.010
	CC-4	1	<0.005	<0.005			<0.005
	DD-4	1	<0.001	0.001			0.001
	DD-6	8	<0.001	0.009	0.012	0.020	0.014
	DD-8	1	<0.001		0.010		0.010
	DD-9	1	<0.001			<0.001	<0.001
	EE-1	9	<0.001	<0.001			<0.001
	EE-3	8	<0.001		<0.001	<0.001	<0.001

Table V-54 (Continued)

SAMPLING DATA
CLEANING OR ETCHING BATH
RAW WASTEWATER

Pollutant	Stream Code	Sample Type	Source	Concentrations (mg/l) Day 1	Day 2	Day 3	Average
127. thallium	BB-3	1	<0.010			<0.010	<0.010
	BB-5	8	<0.010	<0.050*	<0.050*	<0.050*	<0.050
	BB-7	1	<0.010	<0.010			<0.010
	BB-9	1	<0.010		<0.010		<0.010
	CC-4	1	<0.010	<0.020*			<0.020*
	DD-4	1	<0.001	<0.001			<0.001
	DD-6	8	<0.001	<0.010**	<0.010**	<0.010**	<0.010*
	DD-8	1	<0.001		<0.010*		<0.010*
	DD-9	1	<0.001			<0.001	<0.001
	EE-1	9	<0.001	<0.001			<0.001
	EE-3	8	<0.001		<0.001	<0.001	<0.001
128. zinc	B-11	1	ND	0.500			0.500
	C-10	1	0.200	0.900			0.900
	C-11	1	0.200	<30.00			<30.00
	BB-3	1	<0.060			1.000	1.000
	BB-5	8	<0.060	0.400	0.400	0.400	0.400
	BB-7	1	<0.060	0.020			0.020
	BB-9	1	<0.060		1.5		1.5
	CC-4	1	1.10	0.060			0.060
	DD-4	1	<0.010	0.029			0.029
	DD-6	8	<0.010	0.514	0.373	0.995	0.627
	DD-8	1	<0.010		<0.010		<0.010
	DD-9	1	<0.010			1.25	1.25
	EE-1	9	0.064	0.030			0.030
	EE-3	8	0.064		0.197	0.128	0.163
Nonconventional							
acidity	BB-3	1	<1			<1	<1
	BB-5	6	<1	<10,000	<10,000	<10,000	<10,000
	BB-7	1	<1	<1			<1
	BB-9	1	<1		<1		<1
	CC-4	1	<1	<1			<1
	DD-4	1	<1	<1			<1
	DD-6	6	<1	2,100	195	75	790
	DD-9	1	<1			<1	<1
	EE-1	3	<1	<1			<1
	EE-3	4	<1		<1	<1	<1

Table V-54 (Continued)

SAMPLING DATA
CLEANING OR ETCHING BATH
RAW WASTEWATER

Pollutant	Stream Code	Sample Type	Source	Concentrations (mg/l) Day 1	Day 2	Day 3	Average
alkalinity	BB-3	1	160			5,100	5,100
	BB-5	6	160	<1	<1	<1	<1
	BB-7	1	160	156			156
	BB-9	1	160		630		630
	CC-4	1	49	370			370
	DD-4	1	274	8,800			8,800
	DD-6	6	274	<1	<1	<1	<1
	DD-8	1	274		<1		<1
	DD-9	1	274			160	160
	EE-1	3	22	1,850			1,850
	EE-3	4	22		1,740	1,230	1,485
aluminum	B-11	1		2,200			2,200
	B-12	1		2,000			2,000
	C-10	1	2	30			30
	C-11	1	2	70,000			70,000
	BB-3	1	0.500			84	84
	BB-5	8	0.500	15,500	15,300	15,400	15,400
	BB-7	1	0.500	0.300			0.300
	BB-9	1	0.500		0.300		0.300
	CC-4	1	1.10	24			24
	DD-4	1	<0.050	248			248
	DD-6	8	<0.050	910	161	147.0	373.3
	DD-8	1	<0.050		382.0		382.0
	DD-9	1	<0.050			800	800
	EE-1	9	0.011	89.8			89.8
	EE-3	8	0.011		278	89.5	183.75
ammonium nitrogen	BB-3	1	0.05			0.08	0.08
	BB-5	8	0.05	17	25	28	23.33
	BB-7	1	0.05	0.38			0.38
	BB-9	1	0.05		0.96		0.96
	DD-4	1	<0.01	1.09			1.09
	DD-6	8	<0.01	1.2	1.14	8.9	3.8
	DD-8	1	<0.01		440		440
	DD-9	1	<0.01			470	470
	EE-1	9	<0.05	0.69			0.69
	EE-3	8	<0.05		120	0.18	60.09

Table V-54 (Continued)

SAMPLING DATA
CLEANING OR ETCHING BATH
RAW WASTEWATER

Pollutant	Stream Code	Sample Type	Source	Concentrations (mg/l) Day 1	Day 2	Day 3	Average
barium	BB-3	1	<0.150			<0.500	<0.500
	BB-5	8	<0.150	<0.500	<0.500	<0.500	<0.500
	BB-7	1	<0.150	<0.050			<0.050
	BB-9	1	<0.150		<0.050		<0.050
	CC-4	1	<0.050	0.050			0.050
	DD-4	1	0.179	0.095			0.095
	DD-6	8	0.179	<0.020	<0.020	<0.020	<0.020
	DD-8	1	0.179		0.061		0.061
	DD-9	1	0.179			0.027	0.027
	EE-1	9	0.021	0.022			0.022
	EE-3	8	0.021		0.030	0.047	0.039
boron	BB-3	1	0.800			1,390	1,390
	BB-5	8	0.800	3.000	<1.000	<1.000	<1.667
	BB-7	1	0.800	0.300			0.300
	BB-9	1	0.800		0.500		0.500
	CC-4	1	0.400	0.100			0.100
	DD-4	1	<0.100	<0.100			<0.100
	DD-6	8	<0.100	<0.100	<0.100	<0.100	<0.100
	DD-8	1	<0.100		<0.100		<0.100
	DD-9	1	<0.100			<0.100	<0.100
	EE-1	9	<0.050	<0.050			<0.050
	EE-3	8	<0.050		<0.050	<0.050	<0.050
calcium	B-11	1		18			18
	B-12	1		<0.03			<0.03
	C-10	1	12	36			36
	C-11	1	12	<2,500			<2,500
	BB-3	1	4.800			5.000	5.000
	BB-5	8	4.800	7.000	7.000	8.000	7.333
	BB-7	1	4.800	6.600			6.000
	BB-9	1	4.800		10.9		10.9
	CC-4	1	36.9	59.7			59.7
	DD-4	1	5.68	320			320
	DD-6	8	5.68	38.2	200	530	256
	DD-8	1	5.68		5.75		5.75
	DD-9	1	5.68			3.23	3.23
	EE-1	9	4.62	0.043			0.043
	EE-3	8	4.62		1.67	1.64	1.66

Table V-54 (Continued)

SAMPLING DATA
CLEANING OR ETCHING BATH
RAW WASTEWATER

Pollutant	Stream Code	Sample Type	Source	Concentrations (mg/l) Day 1	Day 2	Day 3	Average
chloride	BB-3	1	17			40	40
	BB-5	8	17	20	17	20	19
	BB-7	1	17	22			22
	BB-9	1	17		41		41
	CC-4	1	24	110			110
	DD-4	1	61	320			320
	DD-6	8	61	49	11	49	36
	DD-8	1	61		41		41
	DD-9	1	61			37	37
	EE-1	9	<0.05	<0.3			<0.3
	EE-3	8	<0.05		<0.05	<0.05	<0.05
chemical oxygen demand (COD)	A-6	1	8.00	3,780			3,780
	A-7	1	8.00	207			207
	B-11	1	82.0	1			1
	B-12	1	82.0	17			17
	C-10	1	<5.000	1.0			1.0
	C-11	1	<5.000	9,270			9,270
	BB-3	1	9			4,318	4,318
	BB-5	8	9	51	23	103	59
	BB-7	1	9	276			276
	BB-9	1	9		869		869
	DD-4	1	<0.5	4,100			4,100
	DD-6	8	<0.5	24,000	23,800	24,500	24,100
	DD-8	1	<0.5		7,600		7,600
	DD-9	1	<0.5			2,700	2,700
	EE-1	9	48	420			420
	EE-3	8	48		810	660	735
cobalt	BB-3	1	<0.150			<0.500	<0.500
	BB-5	8	<0.150	<0.500	<0.500	<0.500	<0.500
	BB-7	1	<0.150	<0.050			<0.050
	BB-9	1	<0.150		0.150		0.150
	CC-4	1	<0.050	<0.050			<0.050
	DD-4	1	<0.010	<0.010			<0.010
	DD-6	8	<0.010	0.071	0.060	0.081	0.071
	DD-8	1	<0.010		1.010		1.010
	DD-9	1	<0.010			0.572	0.572
	EE-1	9	<0.010	0.021			0.021
	EE-3	8	<0.010		0.025	<0.010	<0.018

Table V-54 (Continued)

SAMPLING DATA
CLEANING OR ETCHING BATH
RAW WASTEWATER

Pollutant	Stream Code	Sample Type	Source	Concentrations (mg/l) Day 1	Day 2	Day 3	Average
dissolved solids	A-6	1		83,856			83,856
	A-7	1		284,000			284,000
	B-11	1		27,619			27,619
	B-12	1		43,647			43,647
	C-10	1		27,620			27,620
	BB-3	1	310			24,000	24,000
	BB-5	8	310	173,000	180,000	195,000	182,666.667
	BB-7	1	310	586			586
	BB-9	1	310		2,200		2,200
	CC-4	1	300	1,600			1,600
	DD-4	1	670	24,000			24,000
	DD-6	8	670	210,000	260,000	300,000	256,700
	DD-8	1	670		81,000		81,000
	DD-9	1	670			18,000	18,000
	EE-1	9	28	5,400			5,400
	EE-3	8	28		5,600	3,200	4,400
fluoride	BB-3	1	<0.05			1.9	1.9
	BB-5	8	<0.05	2.0	5.4	4.7	4.033
	BB-7	1	<0.05	0.10			0.10
	BB-9	1	<0.05		0.14		0.14
	CC-4	1	0.73	0.17			0.17
	DD-4	1	0.29	0.89			0.89
	DD-6	8	0.29	3.7	2.11	3.1	2.97
	DD-8	1	0.29		0.37		0.37
	DD-9	1	0.29			0.44	0.44
	EE-1	9	0.67	0.42			0.42
	EE-3	8	0.67		7.4	1.5	4.45
iron	BB-3	1	<0.150			11.000	11.000
	BB-5	8	<0.150	164	167	169	166.667
	BB-7	1	<0.150	0.100			0.100
	BB-9	1	<0.150		0.300		0.300
	CC-4	1	0.050	0.700			0.700
	DD-4	1	0.054	0.603			0.603
	DD-6	8	0.054	170	115	94.0	126
	DD-8	1	0.054		1.53		1.53
	DD-9	1	0.054			<0.010	<0.010
	EE-1	9	0.081	0.537			0.537
	EE-3	8	0.081		0.482	0.379	0.431

Table V-54 (Continued)

SAMPLING DATA
CLEANING OR ETCHING BATH
RAW WASTEWATER

Pollutant	Stream Code	Sample Type	Source	Concentrations (mg/l) Day 1	Day 2	Day 3	Average
magnesium	B-11	1		980			980
	B-12	1		0.06			0.06
	C-10	1	4.6	5.9			5.9
	C-11	1	4.6	<50			<50
	BB-3	1	0.500			34	34
	BB-5	8	0.500	118	120	120	119.333
	BB-7	1	0.500	0.600			0.600
	BB-9	1	0.500		1.700		1.700
	CC-4	1	7.0	30.6			30.6
	DD-4	1	108	0.618			0.618
	DD-6	8	108	8.76	11.8	3.70	8.09
	DD-8	1	108		124.0		124.0
	DD-9	1	108			<0.050	<0.050
	EE-1	9	1.68	8.5			8.5
	EE-3	8	1.68		9.46	9.5	9.48
manganese	BB-3	1	<0.150			<0.500	<0.500
	BB-5	8	<0.150	1.500	1.500	1.500	1.500
	BB-7	1	<0.150	<0.050			<0.050
	BB-9	1	<0.150		<0.050		<0.050
	CC-4	1	<0.050	0.050			0.050
	DD-4	1	<0.010	0.026			0.026
	DD-6	8	<0.010	1.90	1.36	2.68	1.98
	DD-8	1	<0.010		1.20		1.20
	DD-9	1	<0.010			0.774	0.774
	EE-1	9	0.016	0.617			0.617
	EE-3	8	0.016		0.273	0.225	0.249
molybdenum	BB-3	1	<0.150			<0.500	<0.500
	BB-5	8	<0.150	<0.500	<0.500	<0.500	<0.500
	BB-7	1	<0.150	<0.050			<0.050
	BB-9	1	<0.150		<0.050		<0.050
	CC-4	1	<0.050	<0.050			<0.050
	DD-4	1	<0.020	<0.020			<0.020
	DD-6	8	<0.020	<0.020	<0.020	<0.020	<0.020
	DD-8	1	<0.020		0.024		0.024
	DD-9	1	<0.020			<0.020	<0.020
	EE-1	9	0.030	0.033			0.033
	EE-3	8	0.030		0.031	<0.020	<0.026

Table V-54 (Continued)

SAMPLING DATA
CLEANING OR ETCHING BATH
RAW WASTEWATER

Pollutant	Stream Code	Sample Type	Source	Concentrations (mg/l) Day 1	Day 2	Day 3	Average
phenols (total; by 4-AAP method)	A-6	1		0.039			0.039
	A-7	1		0.174			0.174
	B-11	1		0.005			0.005
	B-12	1		0.040			0.040
	C-10	1		<0.001			<0.001
	C-11	1		0.197			0.197
	BB-3	1	0.026			<0.005	<0.005
	BB-5	8	0.026	2.9	0.32	0.027	1.082
	BB-7	1	0.026	<0.005			<0.005
	BB-9	1	0.026		0.16		0.16
phosphate	BB-3	1	21			2,500	2,500
	BB-5	8	21	3,000	3,000	3,000	3,000
	BB-7	1	21	<3			<3
	BB-9	1	21		<3		<3
	DD-4	1	20	1,200			1,200
	DD-6	8	20	210	300	<4	<171
	DD-8	1	20		36		36
	DD-9	1	20			48	48
	EE-1	9	8.8	2,000			2,000
	EE-3	8	8.8		1,710	980	1,345
sodium	BB-3	1	76.7			6,190	6,190
	BB-5	8	76.7	104	103	103	103.333
	BB-7	1	76.7	158			158
	BB-9	1	76.7		242		242
	CC-4	1	6.80	107.0			107.0
sulfate	A-6	1		213.0			213.0
	A-7	1		<10.0			<10.0
	B-11	1		10			10
	B-12	1		200			200
	BB-3	1	90			6,600	6,600
	BB-5	8	90	96,000	96,000	9,500	67,166.667
	BB-7	1	90	90			90
	BB-9	1	90		120		120
	CC-4	1	75	540			540
	DD-4	1	180	1,300			1,300
	DD-6	8	180	30	30	26	29
	DD-8	1	180		6		6
	DD-9	1	180			3,600	3,600
	EE-1	9	21	24			24
	EE-3	8	21		6.4	56	31.2

Table V-54 (Continued)

SAMPLING DATA
CLEANING OR ETCHING BATH
RAW WASTEWATER

Pollutant	Stream Code	Sample Type	Source	Concentrations (mg/l) Day 1	Day 2	Day 3	Average
tin	BB-3	1	<0.150			<0.500	<0.500
	BB-5	8	<0.150	<0.500	<5.000*	<0.500	<2.000
	BB-7	1	<0.150	<0.050			<0.050
	BB-9	1	<0.150		<0.050		<0.050
	CC-4	1	<0.050	<0.050			<0.050
	DD-4	1	<0.020	<0.020			<0.020
	DD-6	8	<0.020	<0.020	<0.020	0.905	<0.315
	DD-8	1	<0.020		<0.020		<0.020
	DD-9	1	<0.020			<0.020	<0.020
	EE-1	9	<0.020	0.048			0.048
	EE-3	8	<0.020		<0.020	<0.020	<0.020
titanium	BB-3	1	<0.150			<0.500	<0.500
	BB-5	8	<0.150	2.500	2.500	2.500	2.500
	BB-7	1	<0.150	<0.050			<0.050
	BB-9	1	<0.150		<0.050		<0.050
	CC-4	1	<0.050	<0.050			<0.050
	DD-4	1	<0.010	<0.010			<0.010
	DD-6	8	<0.010	0.327	0.331	0.199	0.286
	DD-8	1	<0.010		<0.010		<0.010
	DD-9	1	<0.010			0.212	0.212
	EE-1	9	<0.010	<0.010			<0.010
	EE-3	8	<0.010		0.027	0.020	0.024
total organic carbon (TOC)	A-6	1	9.000	755			755
	B-11	1	35.00	<1.000			<1.000
	B-12	1	35.00	60			60
	C-10	1	<1.000	1.000			1.000
	C-11	1	<1.000	3,550			3,550
	BB-3	1	<1			1,500	1,500
	BB-5	8	<1	13	18	10	13.667
	BB-7	1	<1	100			100
	BB-9	1	<1		810		810
	DD-4	1	<1	1,110			1,110
	DD-6	8	<1	9,510	8,600	670	6,260
	DD-8	1	<1		1,680		1,680
	DD-9	1	<1			4,860	4,860
	EE-1	9	<1	150			150
	EE-3	8	<1		320	240	280

Table V-54 (Continued)

SAMPLING DATA
CLEANING OR ETCHING BATH
RAW WASTEWATER

Pollutant	Stream Code	Sample Type	Source	Concentrations (mg/l) Day 1	Day 2	Day 3	Average
total solids (TS)	BB-3	1	267			25,600	25,600
	BB-5	8	267	969	330,000	300,000	210,323
	BB-7	1	267	707			707
	BB-9	1	267		2,500		2,500
	CC-4	1	204	2,090			2,090
	DD-4	1	380	25,000			25,000
	DD-6	8	380	330,000	360,000	350,000	347,000
	DD-8	1	380		100,000		100,000
	DD-9	1	380			29,000	29,000
	EE-1	9	30	5,100			5,100
	EE-3	8	30		5,600	3,600	4,600
vanadium	BB-3	1	<0.150			<0.500	<0.500
	BB-5	8	<0.150	<0.500	<0.500	<0.500	<0.500
	BB-7	1	<0.150	<0.050			<0.050
	BB-9	1	<0.150		<0.050		<0.050
	CC-4	1	<0.050	<0.050			<0.050
	DD-4	1	0.026	0.105			0.105
	DD-6	8	0.026	0.026	0.022	0.061	0.036
	DD-8	1	0.026		<0.020		<0.020
	DD-9	1	0.026			<0.020	<0.020
	EE-1	9	<0.020	0.023			0.023
	EE-3	8	<0.020		<0.020	<0.020	<0.020
yttrium	BB-3	1	<0.150			<0.500	<0.500
	BB-5	8	<0.150	<0.500	<0.500	<0.500	<0.500
	BB-7	1	<0.150	<0.050			<0.050
	BB-9	1	<0.150		<0.050		<0.050
	CC-4	1	<0.050	<0.050			<0.050
	DD-4	1	<0.020	<0.020			<0.020
	DD-6	8	<0.020	<0.020	<0.020	<0.020	<0.020
	DD-8	1	<0.020		<0.020		<0.020
	DD-9	1	<0.020			<0.020	<0.020
	EE-1	9	<0.020	<0.020			<0.020
	EE-3	8	<0.020		<0.020	<0.020	<0.020

Table V-54 (Continued)

SAMPLING DATA
CLEANING OR ETCHING BATH
RAW WASTEWATER

Pollutant	Stream Code	Sample Type	Source	Concentrations (mg/l) Day 1	Day 2	Day 3	Average
Conventional							
oil and grease	A-6	1		100			100
	A-7	1		7			7
	B-11	1		12			12
	B-12	1		12			12
	C-10	1		11			11
	C-11	1		11			11
	BB-3	1	<1			160	160
	BB-5	8	<1	<1	43	<1	<15
	BB-7	1	<1	<1			<1
	BB-9	1	<1		10		10
	CC-4	1	<1	1,900			1,900
	DD-4	1	<1	38			38
	DD-6	8	<1	5	<1	4	<3
	DD-8	1	<1		4		4
	DD-9	1	<1			6	6
	EE-1	9	3	18			18
	EE-3	8	3		290	260	275
suspended solids	A-6	1	<1.000	166			166
	A-7	1	<1.000	279			279
	B-11	1	138	27			27
	B-12	1	138	73			73
	C-10	1	<1.00	9			9
	C-11	1	<1.00	348			348
	BB-3	1	8			110	110
	BB-5	8	8	1,540	996	280	938.667
	BB-7	1	8	30			30
	BB-9	1	8		23		23
	CC-4	1	<1	230			230
	DD-4	1	1	1,100			1,100
	DD-6	8	1	12	37	26	25
	DD-8	1	1		80		80
	DD-9	1	1			62	62
	EE-1	9	3	1.0			1.0
	EE-3	8	3		12.7	11	11.85

Table V-54 (Continued)

SAMPLING DATA
CLEANING OR ETCHING BATH
RAW WASTEWATER

Pollutant	Stream Code	Sample Type	Source	Concentrations (mg/l) Day 1	Day 2	Day 3	Average
pH (standard units)	B-11	1		0.5			
	B-12	1		11.4			
	BB-3	1	7.68			9.09	
	BB-5	8	7.68	0.10	0.15	0.15	
	BB-7	1	7.68	6.38			
	BB-9	1	7.68		5.61		
	CC-4	1	5.35	7.69			
	DD-4	1	7.03	9.14			
	DD-6	8	7.03	0.79	2.97	0.31	
	DD-8	1	7.03		1.10		
	DD-9	1	7.03			5.75	
	EE-1	9	6.05	10.11			
	EE-3	8	6.05		10.01	9.90	

*Detection limit raised due to interference.

**Denotes matrix interference problems. A value was obtained, but due to low recovery, confirmation will be needed.

Table V-55

CLEANING OR ETCHING RINSE

Plant	Water Use l/kkg	Water Use gal/ton	Percent Recycle	Wastewater l/kkg	Wastewater gal/ton
1	21,180	5,080	*	1.430	0.3430
2	15,800	3,790	*	2.635	0.6320
3	*	*	*	14.48	3.472
4	*	*	*	61.00	14.63
5	8,339	2,000	*	80.05	19.20
6	*	*	*	98.97	23.7
7	102.1	24.49	0	102.1	24.49
8	*	*	*	143.8	34.5
9	*	*	*	178.0	42.70
10	400.3	96.00	0	333.6	80.00
11	500.3	120.0	0	500.3	120.0
12	5,003	1,200	*	500.3	120.0
13	9,727	2,333	94.3	558.3	133.3
14	141,600	33,970	99.6	600.0	143.9
15	1,063	255.0	0	938.1	225.0
16	3,490	837.0	*	1,163	279.0
17	*	*	*	1,227	294
18	1,313	315.0	0	1,313	315.0
19	2,377	570.0	*	1,591	381.6
20	*	*	*	1,692	406
21	1,780	427.0	0	1,780	427.0
22	*	*	*	1,853	445
23	2,224	533.3	*	2,110	506.0
24	*	*	*	2,330	558.8
25	*	*	*	3,386	812.6
26	*	*	*	3,519	844
27	50,030	12,000	90.0	5,003	1,200
28	5,212	1,250	0	5,212	1,250
29	*	*	*	5,653	1,356
30	*	*	*	5,683	1,363
31	*	*	*	9,795	2,350
32	10,670	2,560	0	10,670	2,560
33	*	*	*	11,525	2,765
34	*	*	*	14,480	3,473
35	16,120	3,865	0	16,120	3,865
36	41,690	10,000	50.0	20,850	5,000
37	*	*	*	23,350	5,600
38	23,520	5,640	0	23,520	5,640
39	*	*	*	36,390	8,727
40	*	*	*	43,950	10,540
41	*	*	*	63,920	15,330

Table V-55 (Continued)

CLEANING OR ETCHING RINSE

Plant	Water Use l/kkg	Water Use gal/ton	Percent Recycle	Wastewater l/kkg	Wastewater gal/ton
42	75,430	18,090	0	75,430	18,090
43	89,350	21,430	0	89,350	21,430
44	250,200	60,000	0	125,100	30,000

*Data not available.

Statistical Summary

Minimum	102.1	24.49	1.430	0.3430
Maximum	250,000	60,000	125,100	30,000
Mean	32,380	7,766	13,912	3,338
Median	9,033	2,167	1,982	476
Sample:	24 of 30 plants		44 of 44 plants	

Note: This table individually lists data from six plants which have both cleaning and etch line rinse discharges.

Table V-56

FREQUENCY OF OCCURRENCE OF TOXIC POLLUTANTS
CLEANING OR ETCHING RINSE
RAW WASTEWATER

	Pollutant	Analytical Quantification Level (mg/l)	Number of Streams Analyzed	Number of Samples Analyzed	Number of Times Observed in Samples (mg/l) ND-0.010	0.011-0.100	0.101-1.000	1.000+
1.	acenaphthene	0.010	20	36	35	1		
2.	acrolein	0.010	20	42	42			
3.	acrylonitrile	0.010	20	42	42			
4.	benzene	0.010	20	42	36	6		
5.	benzidine	0.010	20	36	36			
6.	carbon tetrachloride	0.010	20	42	42			
7.	chlorobenzene	0.010	20	42	42			
8.	1,2,4-trichlorobenzene	0.010	20	36	36			
9.	hexachlorobenzene	0.010	20	36	36			
10.	1,2-dichloroethane	0.010	20	42	42			
11.	1,1,1-trichloroethane	0.010	20	42	42			
12.	hexachloroethane	0.010	20	36	36			
13.	1,1-dichloroethane	0.010	20	42	42			
14.	1,1,2-trichloroethane	0.010	20	42	42			
15.	1,1,2,2-tetrachloroethane	0.010	20	42	42			
16.	chloroethane	0.010	20	42	42			
17.	bis(chloromethyl)ether	0.010	20	42	42			
18.	bis(chloroethyl)ether	0.010	20	36	36			
19.	2-chloroethyl vinyl ether	0.010	20	42	42			
20.	2-chloronaphthalene	0.010	20	36	36			
21.	2,4,6-trichlorophenol	0.010	20	36	36			
22.	p-chloro-m-cresol	0.010	20	36	36			
23.	chloroform	0.010	20	42	18	23	1	
24.	2-chlorophenol	0.010	20	36	36			
25.	1,2-dichlorobenzene	0.010	20	36	36			
26.	1,3-dichlorobenzene	0.010	20	36	36			
27.	1,4-dichlorobenzene	0.010	20	36	36			
28.	3,3'-dichlorobenzidine	0.010	20	36	36			
29.	1,1-dichloroethylene	0.010	20	42	42			
30.	1,2-trans-dichloroethylene	0.010	20	42	41		1	
31.	2,4-dichlorophenol	0.010	20	36	36			
32.	1,2-dichloropropane	0.010	20	42	42			
33.	1,3-dichloropropene	0.010	20	42	42			
34.	2,4-dimethylphenol	0.010	20	36	35	1		
35.	2,4-dinitrotoluene	0.010	20	36	36			
36.	2,6-dinitrotoluene	0.010	20	36	36			
37.	1,2-diphenylhydrazine	0.010	20	36	36			
38.	ethylbenzene	0.010	20	42	42			
39.	fluoranthene	0.010	20	36	36			

Table V-56 (Continued)

FREQUENCY OF OCCURRENCE OF TOXIC POLLUTANTS
CLEANING OR ETCHING RINSE
RAW WASTEWATER

	Pollutant	Analytical Quantification Level (mg/l)	Number of Streams Analyzed	Number of Samples Analyzed	Number of Times Observed in Samples (mg/l) ND-0.010	0.011-0.100	0.101-1.000	1.000+
40.	4-chlorophenyl phenyl ether	0.010	20	36	36			
41.	4-bromophenyl phenyl ether	0.010	20	36	36			
42.	bis(2-chloroisopropyl)ether	0.010	20	36	36			
43.	bis(2-chloroethoxy)methane	0.010	20	36	36			
44.	methylene chloride	0.010	20	42	20	8	11	3
45.	methyl chloride (chloromethane)	0.010	20	42	42			
46.	methyl bromide (bromomethane)	0.010	20	42	42			
47.	bromoform (tribromomethane)	0.010	20	42	42			
48.	dichlorobromomethane	0.010	20	42	42			
49.	trichlorofluoromethane	0.010	20	42	42			
50.	dichlorodifluoromethane	0.010	20	42	42			
51.	chlorodibromomethane	0.010	20	42	40	2		
52.	hexachlorobutadiene	0.010	20	36	36			
53.	hexachlorocyclopentadiene	0.010	20	36	36			
54.	isophorone	0.010	20	36	35		1	
55.	naphthalene	0.010	20	36	35	1		
56.	nitrobenzene	0.010	20	36	36			
57.	2-nitrophenol	0.010	20	36	36			
58.	4-nitrophenol	0.010	20	36	36			
59.	2,4-dinitrophenol	0.010	20	36	36			
60.	4,6-dinitro-o-cresol	0.010	20	36	36			
61.	N-nitrosodimethylamine	0.010	20	36	36			
62.	N-nitrosodiphenylamine	0.010	20	36	36			
63.	N-nitrosodi-n-propylamine	0.010	20	36	36			
64.	pentachlorophenol	0.010	20	36	36			
65.	phenol	0.010	20	36	34	2		
66.	bis (2-ethylhexyl) phthalate	0.010	20	36	28	8		
67.	butyl benzyl phthalate	0.010	20	36	35	1		
68.	di-n-butyl phthalate	0.010	20	36	34	2		
69.	di-n-octyl phthalate	0.010	20	36	34	2		
70.	diethyl phthalate	0.010	20	36	33	3		
71.	dimethyl phthalate	0.010	20	36	36			
72.	benzo(a)anthracene	0.010	20	36	36			
73.	benzo(a)pyrene	0.010	20	36	36			
74.	benzo(b)fluoranthene	0.010	20	36	36			
75.	benzo(k)fluoranthene	0.010	20	36	36			
76.	chrysene	0.010	20	36	36			
77.	acenaphthylene	0.010	20	36	36			
78.	anthracene (a)	0.010	20	36	36			

Table V-56 (Continued)

FREQUENCY OF OCCURRENCE OF TOXIC POLLUTANTS
CLEANING OR ETCHING RINSE
RAW WASTEWATER

	Pollutant	Analytical Quantification Level (mg/l)	Number of Streams Analyzed	Number of Samples Analyzed	Number of Times Observed in Samples (mg/l) ND-0.010	0.011-0.100	0.101-1.000	1.000+
79.	benzo(ghi)perylene	0.010	20	36	36			
80.	fluorene	0.010	20	36	36			
81.	phenanthrene (a)	0.010	-	-				
82.	dibenzo(a,h)anthracene	0.010	20	36	36			
83.	indeno (1,2,3-c,d)pyrene	0.010	20	36	36			
84.	pyrene	0.010	20	36	36			
85.	tetrachloroethylene	0.010	20	42	42			
86.	toluene	0.010	20	42	42			
87.	trichloroethylene	0.010	20	42	42			
88.	vinyl chloride (chloroethylene)	0.010	20	42	42			
89.	aldrin	0.005	19	27	27			
90.	dieldrin	0.005	19	27	27			
91.	chlordane	0.005	19	27	27			
92.	4,4'-DDT	0.005	19	27	27			
93.	4,4'-DDE	0.005	19	27	27			
94.	4,4'-DDD	0.005	19	27	27			
95.	alpha-endosulfan	0.005	19	27	27			
96.	beta-endosulfan	0.005	19	27	27			
97.	endosulfan sulfate	0.005	19	27	27			
98.	endrin	0.005	19	27	27			
99.	endrin aldehyde	0.005	19	27	27			
100.	heptachlor	0.005	19	27	27			
101.	heptachlor epoxide	0.005	19	27	27			
102.	alpha-BHC	0.005	19	27	27			
103.	beta-BHC	0.005	19	27	27			
104.	gamma-BHC	0.005	19	27	27			
105.	delta-BHC	0.005	19	27	27			
106.	PCB-1242 (b)	0.005	19	27	26	1		
107.	PCB-1254 (b)	0.005	-	-				
108.	PCB-1221 (b)	0.005	-	-				
109.	PCB-1232 (b)	0.005	-	-				
110.	PCB-1248 (c)	0.005	19	27	26	1		
111.	PCB-1260 (c)	0.005	-	-				
112.	PCB-1016 (c)	0.005	-	-				
113.	toxaphene	0.005	19	27	27			
114.	antimony	0.100	21	39	39			
115.	arsenic	0.010	30	60	36	13	7	4
116.	asbestos	10 MFL	0	0				

Table V-56 (Continued)

FREQUENCY OF OCCURRENCE OF TOXIC POLLUTANTS
CLEANING OR ETCHING RINSE
RAW WASTEWATER

Pollutant	Analytical Quantification Level (mg/l)	Number of Streams Analyzed	Number of Samples Analyzed	Number of Times Observed in Samples (mg/l)			
				ND-0.010	0.011-0.100	0.101-1.000	1.000+
117. beryllium	0.010	29	58	57		1	
118. cadmium	0.002	29	58	49	8	1	
119. chromium (total)	0.005	29	58	20	11	12	15
120. copper	0.009	29	58	15	12	20	11
121. cyanide (total)	0.010	31	62	56	6		
122. lead	0.020	29	58	30	10	11	7
123. mercury	0.0001	29	58	57	1		
124. nickel	0.005	29	58	45	6	5	2
125. selenium	0.01	21	39	38	1		
126. silver	0.02	21	39	39			
127. thallium	0.100	21	39	39			
128. zinc	0.050	29	58	15	17	11	15
129. 2,3,7,8-tetrachlorodibenzo-p-dioxin	0.005	0	0				

(a), (b), (c) Reported together.

Table V-57

SAMPLING DATA
CLEANING OR ETCHING RINSE
RAW WASTEWATER

Pollutant	Stream Code	Sample Type	Source	Concentrations (mg/l) Day 1	Day 2	Day 3	Average
Toxic Pollutants							
1. acenaphthene	A-3	1	ND	*			*
	A-4	1	ND	*			*
	B-5	1	ND	ND			
	C-6	1	ND	ND			
	C-7	1	ND	ND			
	D-3	6	ND	*			*
	D-5	6	ND	0.017			0.017
	E-5	3	*	ND	ND	ND	
	H-4	1	*	ND			
	H-5	1	*	ND	ND		
	H-6	1	*	ND	ND		
	K-2	1	ND	ND	ND	ND	
	K-3	1	ND	ND	ND	ND	
	L-5	7		ND			
	L-6	3	ND	ND	ND	ND	
	N-6	6	ND	ND			
	N-8	1	ND	ND			
	Q-2	3	ND	ND	ND	ND	
	R-6	3	ND	ND	ND	ND	
	R-7	3	ND	ND	ND	ND	
4. benzene	A-3	1	*	ND			
	A-4	1	*	*			*
	B-5	1	ND	ND			
	C-6	1	ND	ND			
	C-7	1	ND	ND			
	D-3	1	ND	ND	ND	*	*
	D-5	1	ND	ND	ND	*	*
	E-5	1	ND	ND	0.043	ND	0.043
	H-4	1	0.023	*			*
	H-5	1	0.023	*	0.031		0.016
	H-6	1	0.023	0.033	ND		0.033
	K-2	1	0.029	ND	*	ND	*
	K-3	1	0.029	0.042	0.042	0.019	0.034
	L-5	1	ND	ND			
	L-6	1	ND	ND	ND	ND	
	N-6	1	ND	ND	ND	ND	
	N-8	1	ND	ND			
	Q-2	1	ND	ND	ND	ND	
	R-6	1	ND	ND	ND	ND	
	R-7	1	ND	ND	ND	ND	

Table V-57 (Continued)

SAMPLING DATA
CLEANING OR ETCHING RINSE
RAW WASTEWATER

Pollutant	Stream Code	Sample Type	Source	Concentrations (mg/l) Day 1	Day 2	Day 3	Average
23. chloroform	A-3	1	0.052	0.024			0.024
	A-4	1	0.052	0.019			0.019
	B-5	1	*	*			*
	C-6	1	0.055	*			*
	C-7	1	0.055	*			*
	D-3	1	0.020	*	0.011	*	*
	D-5	1	0.020	*	0.011	0.017	*
	E-5	1	*	0.069	0.110	*	0.060
	H-4	1	0.066	0.029			0.029
	H-5	1	0.066	0.071	0.057		0.064
	H-6	1	0.066	0.044	0.030		0.037
	K-2	1	0.045	*	*	*	*
	K-3	1	0.045	0.057	0.067	0.100	0.075
	L-5	1	0.100	ND			
	L-6	1	0.100	0.025	0.030	0.020	0.025
	N-6	1	0.040	*	*	*	*
	N-8	1	0.040	ND			
	Q-2	1	ND	ND	ND	*	*
	R-6	1	0.040	0.020	0.030	0.030	0.027
	R-7	1	0.040	0.020	0.020	0.020	0.020
30. 1,2-trans-di-chloroethylene	A-3	1	ND	ND			
	A-4	1	ND	ND			
	B-5	1	ND	ND			
	C-6	1	ND	ND			
	C-7	1	ND	ND			
	D-3	1	ND	ND	ND	ND	
	D-5	1	ND	ND	ND	*	*
	E-5	1	ND	ND	ND	ND	
	H-4	1	*	0.110			0.110
	H-5	1	*	ND	ND		
	H-6	1	*	*	ND		*
	K-2	1	ND	ND	ND	ND	
	K-3	1	ND	ND	ND	ND	
	L-5	1	ND	ND			
	L-6	1	ND	ND	ND	ND	
	N-6	1	ND	ND	ND	ND	
	N-8	1	ND	ND			
	Q-2	1	ND	ND	ND	ND	
	R-6	1	ND	ND	ND	ND	
	R-7	1	ND	ND	ND	ND	

Table V-57 (Continued)

SAMPLING DATA
CLEANING OR ETCHING RINSE
RAW WASTEWATER

Pollutant	Stream Code	Sample Type	Source	Concentrations (mg/l) Day 1	Day 2	Day 3	Average
34. 2,4-dimethylphenol	A-3	1	ND	ND			
	A-4	1	ND	ND			
	B-5	1	ND	ND			
	C-6	1	ND	ND			
	C-7	1	ND	ND			
	D-3	6	*	ND			
	D-5	6	*	ND			
	E-5	3	0.013	ND	ND	ND	
	H-4	1	ND	0.019			0.019
	H-5	1	ND	ND	ND		
	H-6	1	ND	ND	ND		
	K-2	1	ND	ND	ND	ND	
	K-3	1	ND	ND	ND	ND	
	L-5	7	ND	ND			
	L-6	3	ND	ND	ND	ND	
	N-6	6	ND	ND			
	N-8	1	ND	ND			
	Q-2	3	ND	ND	ND	ND	
	R-6	3	ND	ND	ND	ND	
	R-7	3	ND	ND	ND	ND	
44. methylene chloride	A-3	1	0.130	0.150			0.150
	A-4		0.130	0.510			0.510
	B-5	1	*	0.020			0.020
	C-6	1	0.220	0.018			0.018
	C-7	1	0.220	*			*
	D-3	1	*	*	ND	0.520	0.260
	D-5	1	*	*	0.058	0.280	0.113
	E-5	1	0.017	0.150	6.100	0.120	2.123
	H-4	1	1.100	0.120			0.120
	H-5	1	1.100	0.318	1.300		0.809
	H-6	1	1.100	0.873	0.017		0.445
	K-2	1	1.300	0.040	0.034	0.038	0.037
	K-3	1	1.300	0.940	0.840	2.200	1.327
	L-5	1	ND	0.030			0.030
	L-6	1	ND	*	ND	ND	*
	N-6	1	ND	ND	*	ND	*
	N-8	1	ND	ND			
	Q-2	1	*	*	*	*	*
	R-6	1	*	*	*	*	*
	R-7	1	*	*	*	*	*

Table V-57 (Continued)

SAMPLING DATA
CLEANING OR ETCHING RINSE
RAW WASTEWATER

Pollutant	Stream Code	Sample Type	Source	Concentrations (mg/l) Day 1	Day 2	Day 3	Average
51. chlorodibromomethane	A-3	1	*	*			*
	A-4	1	*	*			*
	B-5	1	ND	ND			
	C-6	1	ND	ND			
	C-7	1	ND	ND			
	D-3	1	ND	*	ND	ND	*
	D-5	1	ND	ND	ND	ND	
	E-5	1	ND	ND	ND	ND	
	H-4	1	ND	ND			
	H-5	1	ND	*	ND		*
	H-6	1	ND	ND	ND		
	K-2	1	ND	ND	ND	ND	
	K-3	1	ND	ND	ND	ND	
	L-5	1	*	ND			
	L-6	1	*	ND	*	ND	*
	N-6	1	ND	ND	ND	ND	
	N-8	1	ND	ND			
	Q-2	1	ND	ND	ND	ND	
	R-6	1	0.020	ND	ND	ND	
	R-7	1	0.020	*	0.020	0.020	0.013
54. isophorone	A-3	1	ND	ND			
	A-4	1	ND	ND			
	B-5	1	ND	ND			
	C-6	1	ND	ND			
	C-7	1	ND	ND			
	D-3	6	ND	ND			
	D-5	6	ND	0.160			0.160
	E-5	3	ND	ND	ND	*	*
	H-4	1	0.011	ND			
	H-5	1	0.011	ND	ND		
	H-6	1	0.011	ND	ND		
	K-2	1	ND	ND	ND	ND	
	K-3	1	ND	ND	ND	ND	
	L-5	7		ND			
	L-6	3	ND	ND	ND	ND	
	N-6	6	ND	ND			
	N-8	1	ND	ND			
	Q-2	3	ND	ND	ND	ND	
	R-6	3	ND	ND	ND	ND	
	R-7	3	ND	ND	ND	ND	

Table V-57 (Continued)

SAMPLING DATA
CLEANING OR ETCHING RINSE
RAW WASTEWATER

Pollutant	Stream Code	Sample Type	Source	Concentrations (mg/l) Day 1	Day 2	Day 3	Average
55. naphthalene	A-3	1	ND	ND			
	A-4	1	ND	ND			
	B-5	1	ND	ND			
	C-6	1	ND	ND			
	C-7	1	ND	ND			
	D-3	6	ND	ND			
	D-5	6	ND	ND			
	E-5	3	ND	ND	*	*	*
	H-4	1	*	ND			
	H-5	1	*	ND	ND		
	H-6	1	*	ND	ND		
	K-2	1	ND	ND	ND	ND	
	K-3	1	ND	ND	ND	ND	
	L-5	7		0.050			0.050
	L-6	3	ND	ND	ND	ND	
	N-6	6	ND	ND			
	N-8	1	ND	ND			
	Q-2	3	ND	ND	ND	ND	
	R-6	3	ND	ND	ND	ND	
	R-7	3	ND	ND	ND	ND	
65. phenol	A-3	1	*	ND			
	A-4	1	*	*			
	B-5	1	*	ND			
	C-6	1	ND	0.012			0.012
	C-7	1	ND	ND			
	D-3	6	ND	*			*
	D-5	6	ND	ND			
	E-5	3	*	ND	*	ND	*
	H-4	1	ND	0.063			0.063
	H-5	1	ND	ND	ND		
	H-6	1	ND	ND	ND		
	K-2	1	ND	ND	ND	ND	
	K-3	1	ND	*	ND	ND	*
	L-5	7	ND	*			*
	L-6	3	ND	*	*	ND	*
	N-6	6	ND	ND			
	N-8	1	ND	ND			
	Q-2	3	ND	*	*	ND	*
	R-6	3	ND	*	ND	ND	*
	R-7	3	ND	ND	ND	ND	

Table V-57 (Continued)

SAMPLING DATA
CLEANING OR ETCHING RINSE
RAW WASTEWATER

Pollutant	Stream Code	Sample Type	Source	Concentrations (mg/l) Day 1	Day 2	Day 3	Average
66. bis(2-ethylhexyl) phthalate	A-3	1	0.200	*			*
	A-4	1	0.200	0.041			0.041
	B-5	1	*	*			*
	C-6	1	*	*			*
	C-7	1	*	*			*
	D-3	6	*	*			*
	D-5	6	*	0.078			0.078
	E-5	3	*	0.089	0.032	0.019	0.047
	H-4	1	0.065	0.098			0.098
	H-5	1	0.065	0.020	*		*
	H-6	1	0.065	*	*		*
	K-2	1	ND	0.021	*	*	*
	K-3	1	ND	*	*	*	*
	L-5	7		ND			
	L-6	3	ND	*	*	ND	*
	N-6	6	ND	*			*
	N-8	1	ND	ND			*
	Q-2	3	*	*	*	*	*
	R-6	3	*	*	*	*	*
	R-7	3	*	ND	ND	ND	
67. butyl benzyl phthalate	A-3	1	*	ND			
	A-4	1	*	ND			
	B-5	1	*	ND			
	C-6	1	ND	ND			
	C-7	1	ND	ND			
	D-3	6	ND	ND			
	D-5	6	ND	ND			
	E-5	3	*	ND	ND	ND	
	H-4	1	ND	0.066			0.066
	H-5	1	ND	*	ND		*
	H-6	1	ND	ND	ND		
	K-2	1	ND	ND	*	*	*
	K-3	1	ND	ND	ND	*	*
	L-5	7		ND			
	L-6	3	ND	*	ND	ND	*
	N-6	6	ND	*			*
	N-8	1	ND	*			*
	Q-2	3	ND	ND	ND	ND	
	R-6	3	ND	ND	ND	ND	
	R-7	3	ND	ND	ND	ND	

Table V-57 (Continued)

SAMPLING DATA
CLEANING OR ETCHING RINSE
RAW WASTEWATER

Pollutant	Stream Code	Sample Type	Source	Concentrations (mg/l) Day 1	Day 2	Day 3	Average
68. di-n-butyl phthalate	A-3	1	0.076	*			*
	A-4	1	0.076	*			*
	B-5	1	*	*			*
	C-6	1	ND	*			*
	C-7	1	ND	ND			
	D-3	6	*	*			*
	D-5	6	*	ND			
	E-5	3	*	0.033	ND	*	0.017
	H-4	1	*	0.068			0.068
	H-5	1	*	*	*		*
	H-6	1	*	*	*		*
	K-2	1	ND	*	*	*	*
	K-3	1	ND	*	*	ND	*
	L-5	7		ND			
	L-6	3	ND	ND	ND	ND	
	N-6	6	ND	*			*
	N-8	1	ND	ND			
	Q-2	3	ND	ND	ND	ND	
	R-6	3	*	ND	ND	*	*
	R-7	3	*	ND	*	ND	*
69. di-n-octyl phthalate	A-3	1	ND	ND			
	A-4	1	ND	ND			
	B-5	1	ND	ND			
	C-6	1	ND	ND			
	C-7	1	ND	ND			
	D-3	6	ND	ND			
	D-5	6	ND	ND			
	E-5	3	ND	ND	ND	*	*
	H-4	1	ND	0.038			0.038
	H-5	1	ND	*	ND		*
	H-6	1	ND	ND	ND		
	K-2	1	ND	0.029	ND	ND	0.029
	K-3	1	ND	ND	ND	ND	
	L-5	7		ND			
	L-6	3	ND	ND	ND	ND	
	N-6	6	ND	ND			
	N-8	1	ND	ND			
	Q-2	3	ND	ND	ND	ND	
	R-6	3	ND	ND	ND	ND	
	R-7	3	ND	ND	ND	ND	

Table V-57 (Continued)

SAMPLING DATA
CLEANING OR ETCHING RINSE
RAW WASTEWATER

Pollutant	Stream Code	Sample Type	Source	Concentrations (mg/l) Day 1	Day 2	Day 3	Average
70. diethyl phthalate	A-3	1	ND	ND			
	A-4	1	ND	ND			
	B-5	1	*	ND			
	C-6	1	ND	ND			
	C-7	1	ND	ND			
	D-3	6	ND	ND			
	D-5	6	ND	*			*
	E-5	3	*	0.011	ND	*	*
	H-4	1	*	0.022			0.022
	H-5	1	*	ND	ND		*
	H-6	1	*	0.013	ND		0.013
	K-2	1	ND	ND	ND	*	*
	K-3	1	ND	ND	ND	*	*
	L-5	7		ND			
	L-6	3	ND	ND	ND	ND	
	N-6	6	ND	ND			
	N-8	1	ND	ND			
	Q-2	3	ND	ND	ND	ND	
	R-6	3	ND	ND	ND	ND	
	R-7	3	ND	ND	ND	ND	
106. PCB-1242 (a)	A-4	1	ND	**			**
107. PCB-1254 (a)	B-5	1	**	**			**
108. PCB-1221 (a)	C-6	1	**	ND			
	C-7	1	**	**			**
	D-3	6	**	**			**
	D-5	6	**	**			**
	E-5	3	**	**			**
	H-4	1	**	0.016			0.016
	H-5	1	**	ND			
	H-6	1	**	**			**
	K-2	1	ND	**			**
	K-3	1	ND	**			**
	L-5	7	ND	ND			
	L-6	3	ND	ND	ND	ND	
	N-6	6	ND	ND			
	N-8	1	ND	ND			
	Q-2	3	ND	ND	ND	ND	
	R-6	3	ND	ND	ND	ND	
	R-7	3	ND	ND	ND	ND	

Table V-57 (Continued)

SAMPLING DATA
CLEANING OR ETCHING RINSE
RAW WASTEWATER

Pollutant	Stream Code	Sample Type	Source	Concentrations (mg/l) Day 1	Day 2	Day 3	Average
109. PCB-1232 (b)	A-4	1	0.130	**			**
110. PCB-1248 (b)	B-5	1	0.400	**			**
111. PCB-1260 (b)	C-6	1	0.610	ND			
112. PCB-1016 (b)	C-7	1	0.610	**			**
	D-3	6	0.290	**			**
	D-5	6	0.290	**			**
	E-5	3	0.200	**			**
	H-4	1	1.100	0.020			0.020
	H-5	1	1.100	ND			
	H-6	1	**	**			**
	K-2	1	ND	**			**
	K-3	1	ND	**			**
	L-5	7	ND	ND			
	L-6	3	ND	ND	ND	ND	
	N-6	6	ND	ND			
	N-8	1	ND	ND			
	Q-2	3	ND	ND	ND	ND	
	R-6	3	ND	ND	ND	ND	
	R-7	3	ND	ND	ND	ND	
114. antimony	BB-4	9	<0.025	<0.010	<0.010	<0.010	<0.010
	BB-6	8	<0.025	<0.010	<0.010	<0.010	<0.010
	BB-8	1	<0.025			<0.010	<0.010
	BB-10	1	<0.025			<0.010	<0.010
	CC-5	3	<0.010	<0.010	<0.010	<0.010	<0.010
	DD-5	9	<0.002	<0.002	<0.002	<0.002	<0.002
	DD-7	8	<0.002	0.002	0.003	0.003	0.003
	DD-10	8	<0.002	<0.002	<0.002	<0.002	<0.002
	DD-11	1	<0.002			<0.020†	<0.020†
	DD-12	9	<0.002	0.002	<0.002	0.007	<0.004
	EE-2	8	<0.002		<0.002		<0.002
	EE-4	8	<0.002		0.002	0.002	0.002

†Matrix interference problem - value was determined but, due to low recovery, confirmation will be needed.

Table V-57 (Continued)

SAMPLING DATA
CLEANING OR ETCHING RINSE
RAW WASTEWATER

Pollutant	Stream Code	Sample Type	Source	Concentrations (mg/l) Day 1	Day 2	Day 3	Average
115. arsenic	A-3	1	<0.010	<0.010			<0.010
	B-5	1	<0.010	<0.010			<0.010
	C-6	1	<0.020	<0.010			<0.010
	C-7	1	<0.020	<0.010			<0.010
	D-3	6	<0.010	<0.010			<0.010
	D-5	6	<0.010	<0.010			<0.010
	E-5	3	<0.010	0.010	<0.010		<0.010
	H-5	1	<0.010	<0.010	<0.010		<0.010
	H-6	1	<0.010	<0.010	<0.010		<0.010
	K-2	1	<0.010	<0.010	<0.010	<0.010	<0.010
	K-3	1	<0.010	<0.010	<0.010	<0.010	<0.010
	L-5	7	<0.0002	0.0071			0.0071
	L-6	3	<0.0002	0.056	0.039	0.026	0.040
	N-6	6	<0.0002	0.004			0.004
	N-8	1	<0.0002	0.004			0.004
	Q-2	3	<0.0028	0.025	0.013	0.027	0.022
	R-6	3	<0.0037	0.280	0.190	0.120	0.197
	R-7	3	0.0037	0.014	0.016	0.010	0.013
	BB-4	9	<0.010	<0.010	<0.010	<0.010	<0.010
	BB-6	8	<0.010	<0.010	0.060	<0.010	<0.027
	BB-8	1	<0.010			<0.010	<0.010
	BB-10	1	<0.010			<0.010	<0.010
	CC-5	3	<0.010	<0.010	<0.010	<0.010	<0.010
	DD-5	9	<0.001	1.50	0.007	1.60	1.04
	DD-7	8	<0.001	0.040	0.060	0.080	0.060
	DD-10	8	<0.001	0.004	0.016	0.009	0.010
	DD-11	1	<0.001			1.32	1.32
	DD-12	9	<0.001	0.120	<0.001	1.30	0.47
	EE-2	8	0.021		0.126		0.126
	EE-4	8	0.021		0.126	0.147	0.137

Table V-57 (Continued)

SAMPLING DATA
CLEANING OR ETCHING RINSE
RAW WASTEWATER

Pollutant	Stream Code	Sample Type	Source	Concentrations (mg/l) Day 1	Day 2	Day 3	Average
117. beryllium	A-3	1	<0.001	<0.001			<0.001
	B-5	1		0.200			0.200
	C-7	1	<0.001	<0.001			<0.001
	D-3	6	<0.001	<0.001			<0.001
	E-5	3	<0.001	<0.001	<0.001		<0.001
	H-4	1	<0.001	<0.020			<0.020
	H-5	1	<0.001	<0.001	<0.001		<0.001
	H-6	1	<0.001	<0.001			<0.001
	K-2	1	<0.020	<0.020	<0.020	<0.020	<0.020
	K-3	1	<0.020	<0.020	<0.020	<0.020	<0.020
	L-5	7	<0.0005	<0.0005			<0.0005
	L-6	3	<0.0005	<0.0005	<0.0005	<0.0005	<0.0005
	N-6	6	<0.0005	<0.0005			<0.0005
	N-8	1	<0.0005	<0.0005			<0.0005
	Q-2	3	<0.0005	<0.0005	0.0025	0.0029	<0.0020
	R-6	3	<0.0017	0.0038	0.0067	0.0083	0.0063
	R-7	3	<0.0017	0.0038	<0.0005	<0.0005	<0.0016
	BB-4	9	<0.015	<0.005	<0.005	<0.005	<0.005
	BB-6	8	<0.015	<0.005	<0.005	<0.005	<0.005
	BB-8	1	<0.015			<0.005	<0.005
	BB-10	1	<0.015			<0.005	<0.005
	CC-5	3	<0.005	<0.005	<0.005	<0.005	<0.005
	DD-5	9	<0.010	<0.010	<0.010	<0.010	<0.010
	DD-7	8	<0.010	<0.010	<0.010	<0.010	<0.010
	DD-10	8	<0.010	<0.010	<0.010	<0.010	<0.010
	DD-11	1	<0.010			<0.010	<0.010
	DD-12	9	<0.010	<0.010	<0.010	<0.010	<0.010
	EE-2	8	<0.010		<0.010		<0.010
	EE-4	8	<0.010		<0.010	<0.010	<0.010

Table V-57 (Continued)

SAMPLING DATA
CLEANING OR ETCHING RINSE
RAW WASTEWATER

Pollutant	Stream Code	Sample Type	Source	Concentrations (mg/l) Day 1	Day 2	Day 3	Average
118. cadmium	A-3	1	<0.002	<0.002			<0.002
	B-5	1		0.200			0.200
	C-7	1	<0.002	<0.002			<0.002
	D-3	6	<0.002	0.009			0.009
	E-5	3	<0.002	0.010	0.030		0.020
	H-4	1	<0.002	<0.040			<0.040
	H-5	1	<0.002	0.008	0.030		0.019
	H-6	1	<0.002	0.003			0.003
	K-2	1	<0.010	<0.010	<0.010	<0.010	<0.010
	K-3	1	<0.010	<0.010	<0.010	<0.010	<0.010
	L-5	7	<0.0005	<0.0028			<0.0028
	L-6	3	<0.0005	<0.0005	<0.0005	<0.0008	<0.0006
	N-6	6	<0.0005	<0.0005			<0.0005
	N-8	1	<0.0005	<0.0005			<0.0005
	Q-2	3	<0.0005	<0.0005	<0.0005	<0.0011	<0.0007
	R-6	3	<0.0005	0.027	0.024	0.030	0.027
	R-7	3	<0.0005	0.0035	0.002	<0.0005	<0.002
	BB-4	9	<0.060	<0.020	<0.020	<0.020	<0.020
	BB-6	8	<0.060	<0.020	<0.020	<0.020	<0.020
	BB-8	1	<0.060			<0.020	<0.020
	BB-10	1	<0.060			<0.020	<0.020
	CC-5	3	<0.020	<0.020	<0.020	<0.020	<0.020
	DD-5	9	<0.010	0.010	<0.010	<0.010	<0.010
	DD-7	8	<0.010	<0.010	0.038	0.028	<0.025
	DD-10	8	<0.010	<0.010	<0.010	<0.010	<0.010
	DD-11	1	<0.010			0.027	0.027
	DD-12	9	<0.010	<0.010	<0.010	<0.010	<0.010
	EE-2	8	<0.010		<0.010		<0.010
	EE-4	8	<0.010		<0.010	<0.010	<0.010

Table V-57 (Continued)

SAMPLING DATA
CLEANING OR ETCHING RINSE
RAW WASTEWATER

Pollutant	Stream Code	Sample Type	Source	Concentrations (mg/l) Day 1	Day 2	Day 3	Average
119. chromium	A-3	1	<0.005	0.007			0.007
	B-5	1		280			280
	C-7	1	0.007	0.020			0.020
	D-3	6	<0.005	0.040			0.040
	E-5	3	<0.005	0.060	0.080		0.070
	H-4	1	<0.005	<0.100			<0.100
	H-5	1	<0.005	0.050	0.200		0.125
	H-6	1	<0.005	0.200			0.200
	K-2	1	<0.030	2.3	3.2	3.7	3.1
	K-3	1	<0.030	2.7	3.0	0.190	2.0
	L-5	7	<0.001	104			104
	L-6	3	<0.001	0.009	0.008	0.024	0.014
	N-6	6	<0.001	0.007			0.007
	N-8	1	<0.001	0.013			0.013
	Q-2	3	0.004	0.340	0.310	0.390	0.347
	R-6	3	<0.001	2.6	1.7	1.7	2.0
	R-7	3	<0.001	4.6	1.9	4.7	3.7
	BB-4	9	<0.060	<0.020	<0.020	<0.020	<0.020
	BB-6	8	<0.060	<0.020	0.080	0.040"2"	<0.047
	BB-8	1	<0.060			<0.020	<0.020
	BB-10	1	<0.060			<0.020	<0.020
	CC-5	3	<0.020	<0.020	<0.020	<0.020	<0.020
	DD-5	9	<0.020	0.022	<0.020	<0.020	<0.021
	DD-7	8	<0.020	0.133	0.539	0.089	0.254
	DD-10	8	<0.020	<0.020	<0.020	<0.020	<0.020
	DD-11	1	<0.020			0.126	0.126
	DD-12	9	<0.020	0.106	0.902	0.117	0.375
	EE-2	8	0.021		<0.020		<0.020
	EE-4	8	0.021		4.95	2.91	3.93

Table V-57 (Continued)

SAMPLING DATA
CLEANING OR ETCHING RINSE
RAW WASTEWATER

Pollutant	Stream Code	Sample Type	Source	Concentrations (mg/l) Day 1	Day 2	Day 3	Average
120. copper	A-3	1	0.010	0.060			0.060
	B-5	1		480			480
	C-7	1	0.020	0.200			0.200
	D-3	6	<0.009	3.0			3.0
	E-5	3	<0.009	1.0	1.0		1.0
	H-4	1	0.010	4.0			4.0
	H-5	1	0.010	0.400	1.0		0.7
	H-6	1	0.010	5.0			5.0
	K-2	1	<0.020	0.160	0.200	0.280	0.213
	K-3	1	<0.020	0.020	0.030	0.030	0.027
	L-5	7	0.01	0.04			0.04
	L-6	3	0.01	0.2	0.27	0.23	0.2
	N-6	6	0.008	0.0011			0.0011
	N-8	1	0.008	0.009			0.009
	Q-2	3	0.026	3.5	2.7	3.4	3.2
	R-6	3	0.010	38	38	27	34
	R-7	3	0.010	0.4	0.28	0.28	0.3
	BB-4	9	<0.150	0.150	0.100	0.100	0.120
	BB-6	8	<0.150	0.100	4.15	0.350"2"	1.53
	BB-5	1	<0.150			<0.050	<0.050
	BB-10	1	<0.150			<0.050	<0.050
	CC-5	3	<0.050	<0.050	<0.050	<0.050	<0.050
	DD-5	9	0.013	0.016	<0.010	<0.010	<0.012
	DD-7	8	0.013	0.010	0.031	0.030	0.024
	DD-10	8	0.013	<0.010	<0.010	<0.010	<0.010
	DD-11	1	0.013			0.038	0.038
	DD-12	9	0.013	0.140	0.021	0.064	0.075
	EE-2	8	<0.010		<0.010		<0.010
	EE-4	8	<0.010		0.032	<0.010	<0.021

Table V-57 (Continued)

SAMPLING DATA
CLEANING OR ETCHING RINSE
RAW WASTEWATER

Pollutant	Stream Code	Sample Type	Source	Concentrations (mg/l) Day 1	Day 2	Day 3	Average
121. cyanide	A-3	1		0.007			0.007
	A-4	1		0.009			0.009
	B-5	1		<0.001			<0.001
	C-6	1		<0.001			<0.001
	C-7	1		0.003			0.003
	D-3	6		0.007			0.007
	D-5	6		0.002			0.002
	E-5	3		0.033	0.021	0.042	0.032
	H-5	1		<0.001	<0.001		<0.001
	H-6	1		<0.001	0.001		<0.001
	K-2	1		0.010	0.008	0.008	0.009
	K-3	1		<0.001	0.001	0.001	<0.001
	L-5	1	ND	<0.02			<0.02
	L-6	3		<0.02	<0.02	<0.02	<0.02
	N-6	6		<0.020			<0.020
	N-8	1		<0.020			<0.020
	Q-2	1		<0.02	<0.02	<0.02	<0.02
	R-6	1		0.00028	0.00059	0.00002	0.00030
	R-7	1		<0.02	<0.02	0.03	<0.02
	BB-4	9	<0.02	<0.02	<0.02	<0.02	<0.02
	BB-6	8	<0.02	<0.02	<0.02	<0.02	<0.02
	BB-8	1	<0.02			<0.02	<0.02
	BB-10	1	<0.02			<0.02	<0.02
	CC-5	3	<0.02	<0.02	<0.02	<0.02	<0.02
	DD-5	9	<0.02	<0.02	<0.02	<0.02	<0.02
	DD-7	8	<0.02	<0.02	<0.02	<0.02	<0.02
	DD-10	8	<0.02	<0.02	<0.02	<0.02	<0.02
	DD-11	1	<0.02			0.038	0.038
	DD-12	9	<0.02	<0.02	<0.02	<0.02	<0.02
	EE-2	8	<0.02		0.033		0.033
	EE-4	8	<0.02		<0.02	<0.02	<0.02

Table V-57 (Continued)

SAMPLING DATA
CLEANING OR ETCHING RINSE
RAW WASTEWATER

Pollutant	Stream Code	Sample Type	Source	Concentrations (mg/l) Day 1	Day 2	Day 3	Average
122. lead	A-3	1	<0.020	0.020			0.020
	B-5	1		7.0			7.0
	C-7	1	0.030	<0.020			<0.020
	D-3	6	<0.020	0.200			0.200
	E-5	3	<0.020	0.500	0.800		0.650
	H-4	1	<0.020	<0.300			<0.300
	H-5	1	<0.020	0.200	0.800		0.500
	H-6	1	<0.020	0.4			0.4
	K-2	1	<0.050	<0.050	<0.050	<0.050	<0.050
	K-3	1	<0.050	<0.050	<0.050	<0.050	<0.050
	L-5	7	0.014	0.03			0.03
	L-6	3	0.014	0.030	0.021	0.025	0.025
	N-6	6	0.010	0.020			0.020
	N-8	1	0.010	0.012			0.012
	Q-2	3	0.006	1.6	1.1	2.2	1.6
	R-6	3	<0.001	7.9	11	11	10
	R-7	3	<0.001	0.013	0.05	0.01	0.02
	BB-4	9	<0.150	<0.050	<0.050	<0.050	<0.050
	BB-6	8	<0.150	0.050	0.300	0.200"2"	0.180
	BB-8	1	<0.150			<0.050	<0.050
	BB-10	1	<0.150			<0.050	<0.050
	CC-5	3	<0.050	<0.050	<0.050	<0.050	<0.050
	DD-5	9	<0.100	<0.100	<0.100	<0.100	<0.100
	DD-7	8	<0.100	0.153	0.220	<0.100	<0.160
	DD-10	8	<0.100	<0.100	<0.100	<0.100	<0.100
	DD-11	1	<0.100			0.119	0.119
	DD-12	9	<0.100	<0.100	<0.100	<0.100	<0.100
	EE-2	8	<0.100		<0.100		<0.100
	EE-4	8	<0.100		<0.100	<0.100	<0.100

Table V-57 (Continued)

SAMPLING DATA
CLEANING OR ETCHING RINSE
RAW WASTEWATER

Pollutant	Stream Code	Sample Type	Source	Concentrations (mg/l) Day 1	Day 2	Day 3	Average
123. mercury	A-3	1	0.0006	0.0005			0.0005
	B-5	1		0.0006			0.0006
	C-7	1	0.0004	0.0005			0.0005
	D-3	6	0.0006	0.0008			0.0008
	E-5	3	0.0004	0.0005	0.0013		0.0009
	H-4	1	0.0004	<0.001			<0.001
	H-5	1	0.0004	0.004	0.003		0.004
	H-6	1	0.0004	0.0004			0.0004
	K-2	1	<0.0004	<0.004	<0.002	<0.002	<0.003
	K-3	1	<0.0004	<0.002	<0.002	<0.002	<0.002
	L-5	7	0.0073	0.0034			0.0034
	L-6	3	0.0073	0.0022	0.0019	0.0015	0.0019
	N-6	6	0.0091	0.0021			0.0021
	N-8	1	0.0091	0.021			0.021
	Q-2	3	<0.0001	<0.0001	<0.0001	<0.0001	<0.0001
	R-6	3	0.0007	<0.0001	<0.0001	<0.0001	<0.0001
	R-7	3	0.0007	<0.0001	<0.0001	<0.0001	<0.0001
	BB-4	9	<0.0002	<0.0002	<0.0002	<0.0002	<0.0002
	BB-6	8	<0.0002	<0.0002	<0.0002	0.0006	<0.0003
	BB-8	1	<0.0002			<0.0002	<0.0002
	BB-10	1	<0.0002			<0.0002	<0.0002
	CC-5	3	<0.0004	0.0002	<0.0002	<0.0002	<0.0002
	DD-5	9	<0.005	<0.005	<0.005	<0.005	<0.005
	DD-7	8	<0.005	<0.005	<0.005	<0.005	<0.005
	DD-10	8	<0.005	<0.005	<0.005	<0.005	<0.005
	DD-11	1	<0.005			<0.005	<0.005
	DD-12	9	<0.005	<0.005	<0.005	<0.005	<0.005
	EE-2	8	<0.005		<0.005		<0.005
	EE-4	8	<0.005		<0.005	<0.005	<0.005

Table V-57 (Continued)

SAMPLING DATA
CLEANING OR ETCHING RINSE
RAW WASTEWATER

Pollutant	Stream Code	Sample Type	Source	Concentrations (mg/l) Day 1	Day 2	Day 3	Average
124. nickel	A-3	1	<0.005	<0.005			<0.005
	B-5	1		160			160
	C-7	1	0.030	<0.005			<0.005
	D-3	6	<0.005	<0.005			<0.005
	E-5	3	<0.005	<0.005	<0.005		<0.005
	H-4	1	<0.005	<0.100			<0.100
	H-5	1	<0.005	<0.005	<0.005		<0.005
	H-6	1	<0.005	0.007			0.007
	K-2	1	<0.020	<0.020	<0.020	<0.020	<0.020
	K-3	1	<0.020	<0.020	0.020	<0.020	<0.020
	L-5	7	<0.001	0.025			0.025
	L-6	3	<0.001	<0.001	<0.001	0.003	<0.002
	N-6	6	<0.001	<0.001			<0.001
	N-8	1	<0.001	<0.001			<0.001
	Q-2	3	<0.001	0.011	0.005	0.016	0.011
	R-6	3	<0.001	0.42	0.3	0.23	0.3
	R-7	3	<0.001	<0.001	0.012	0.003	<0.005
	BB-4	9	<0.150	<0.050	<0.050	<0.050	<0.050
	BB-6	8	<0.150	<0.050	<0.050	<0.050	<0.050
	BB-8	1	<0.150			<0.050	<0.050
	BB-10	1	<0.150			10.7	10.7
	CC-5	3	<0.050	<0.050	<0.050	<0.050	<0.050
	DD-5	9	<0.050	<0.020	<0.020	<0.020	<0.020
	DD-7	8	<0.050	<0.020	<0.020	<0.020	<0.020
	DD-10	8	<0.050	<0.020	0.200	<0.020	<0.080
	DD-11	1	<0.050			<0.020	<0.020
	DD-12	9	<0.050	<0.020	0.638	<0.020	<0.226
	EE-2	8	<0.020		<0.020		<0.020
	EE-4	8	<0.020		0.036	<0.020	<0.028

Table V-57 (Continued)

SAMPLING DATA
CLEANING OR ETCHING RINSE
RAW WASTEWATER

Pollutant	Stream Code	Sample Type	Source	Concentrations (mg/l) Day 1	Day 2	Day 3	Average
125. selenium	BB-4	9	<0.010	<0.010	<0.010	<0.010	<0.010
	BB-6	8	<0.010	<0.010	<0.010	<0.010	<0.010
	BB-8	1	<0.010			<0.010	<0.010
	BB-10	1	<0.010			<0.010	<0.010
	CC-5	3	<0.010	<0.010	<0.010	<0.010	<0.010
	DD-5	9	<0.005	<0.005	<0.005	0.035	<0.015
	DD-7	8	<0.005	<0.005	<0.005	<0.005	<0.005
	DD-10	8	<0.005	<0.005	<0.005	<0.005	<0.005
	DD-11	1	<0.005			<0.005	<0.005
	DD-12	9	<0.005	<0.005	<0.005	<0.005	<0.005
	EE-2	8	<0.005		<0.005		<0.005
	EE-4	8	<0.005		<0.005	<0.005	<0.005
126. silver	BB-4	9	<0.010	<0.010	<0.010	<0.010	<0.010
	BB-6	8	<0.010	<0.010	<0.010	<0.010	<0.010
	BB-8	1	<0.010			<0.010	<0.010
	BB-10	1	<0.010			<0.010	<0.010
	CC-5	3	<0.005	<0.005	<0.005	<0.005	<0.005
	DD-5	9	<0.001	<0.001	<0.001	<0.001	<0.001
	DD-7	8	<0.001	0.001	0.001	0.001	0.001
	DD-10	8	<0.001	<0.001	<0.001	0.001	<0.001
	DD-11	1	<0.001			<0.001	<0.001
	DD-12	9	<0.001	<0.001	<0.001	<0.001	<0.001
	EE-2	8	<0.001		<0.001		<0.001
	EE-4	8	<0.001		<0.001	<0.001	<0.001
127. thallium	BB-4	9	<0.010	<0.010	<0.010	<0.010	<0.010
	BB-6	8	<0.010	<0.010	<0.010	<0.010	<0.010
	BB-8	1	<0.010			<0.010	<0.010
	BB-10	1	<0.010			<0.010	<0.010
	CC-5	3	<0.010	<0.010	<0.010	<0.010	<0.010
	DD-5	9	<0.001	<0.001	<0.001	<0.001	<0.001
	DD-7	8	<0.001	<0.001	<0.001	<0.001	<0.001
	DD-10	8	<0.001	<0.001	<0.001	<0.001	<0.001
	DD-11	1	<0.001			<0.001	<0.001
	DD-12	9	<0.001	<0.001	<0.001	<0.001	<0.001
	EE-2	8	<0.001		<0.001		<0.001
	EE-4	8	<0.001		<0.001	<0.001	<0.001

Table V-57 (Continued)

SAMPLING DATA
CLEANING OR ETCHING RINSE
RAW WASTEWATER

Pollutant	Stream Code	Sample Type	Source	Concentrations (mg/l) Day 1	Day 2	Day 3	Average
128. zinc	A-3	1	0.060	0.100			0.100
	B-5	1		410			410
	C-7	1	0.200	0.070			0.070
	D-3	6	<0.050	3.0			3.0
	E-5	3	<0.050	0.5	0.5		0.5
	H-4	1	0.100	3.0			3.0
	H-5	1	0.100	0.200	0.400		0.300
	H-6	1	0.100	6.0			6.0
	K-2	1	<0.020	0.080	0.120	0.150	0.117
	K-3	1	<0.020	0.020	0.040	<0.020	<0.027
	L-5	7	0.053	0.11			0.11
	L-6	3	0.053	0.053	0.053	<0.01	<0.04
	N-6	6	<0.010	0.068			0.068
	N-8	1	<0.010	0.098			0.098
	Q-2	3	<0.010	10	6.6	10	9
	R-6	3	0.053	48	51	46	48
	R-7	3	0.053	36	6.8	3.8	16
	BB-4	9	<0.060	0.060	0.040	0.040	0.047
	BB-6	8	<0.060	0.360	2.38	4.78"2"	2.51
	BB-8	1	<0.060			<0.020	<0.020
	BB-10	1	<0.060			0.080	0.080
	CC-5	3	1.10	<0.020	<0.020	<0.020	<0.020
	DD-5	9	<0.010	<0.010	<0.010	<0.010	<0.010
	DD-7	8	<0.010	<0.020	0.089	0.166	<0.092
	DD-10	8	<0.010	<0.010	<0.010	<0.010	<0.010
	DD-11	1	<0.010			0.046	0.046
	DD-12	9	<0.010	0.091	<0.010	<0.010	<0.037
	EE-2	8	0.064		0.076		0.076
	EE-4	8	0.064		0.109	0.147	0.128

Table V-57 (Continued)

SAMPLING DATA
CLEANING OR ETCHING RINSE
RAW WASTEWATER

Pollutant	Stream Code	Sample Type	Source	Concentrations (mg/l) Day 1	Day 2	Day 3	Average
Nonconventional Pollutants							
acidity	BB-4	9	<1	<1	<1	<1	<1
	BB-6	8	<1	<1	9,500	9,400	<6,300
	BB-8	1	<1			<1	<1
	BB-10	1	<1			<1	<1
	CC-5	3	<1	<1	<1	<1	<1
	DD-5	9	<1	<1	<1	<1	<1
	DD-7	8	<1	2,800	800	>5	>3,600
	DD-10	8	<1	<1	<1	<1	<1
	DD-11	1	<1			<1	<1
	DD-12	9	<1	<1	<1	<1	<1
	EE-2	8	<1		<1		<1
	EE-4	8	<1		<1	<1	<1
alkalinity	A-3	1		68	86		77
	A-4	1		70	205		138
	B-5	1		6			6
	C-6	1		0			0
	C-7	1		0			0
	D-3	6		0			0
	D-5	6		530			530
	E-5	3		0	0	0	0
	H-4	1	107	3,500			3,500
	H-5	1	107	110	0		55
	H-6	1	107	40	20		30
	K-2	1	96	0	0	0	0
	K-3	1	96	40	0	0	13
	L-5	7		<10			<10
	L-6	3		<10	<10	<10	<10
	N-6	6		310			310
	N-8	1		90			90
	Q-2	3	150	60	130	130	110
	R-6	3	170	12	16	66	31
	R-7	1	170	110	160	83	118
	BB-4	9	160	360	280	280	310
	BB-6	8	160	<1	<1	<1	<1
	BB-8	1	160			181	181
	BB-10	1	160			120	120
	CC-5	3	49	62	68	72	67
	DD-5	9	274	320	300	360	330
	DD-7	8	274	<1	<1	<1	<1
	DD-10	8	274	190	110	185	162
	DD-11	1	274			6.0	6.0
	DD-12	9	274	580	160	785	508
	EE-2	8	22		100		100
	EE-4	8	22		104	48	76

Table V-57 (Continued)

SAMPLING DATA
CLEANING OR ETCHING RINSE
RAW WASTEWATER

Pollutant	Stream Code	Sample Type	Source	Concentrations (mg/l) Day 1	Day 2	Day 3	Average
aluminum	BB-4	9	0.500	0.100	<0.100	<0.100	<0.100
	BB-6	8	0.500	382	359	395	379
	BB-8	1	0.500			0.300	0.300
	BB-10	1	0.500			0.300	0.300
	CC-5	3	1.10	14.4	15.6	11.8	13.9
	DD-5	9	<0.050	60.3	57.7	4.1	40.7
	DD-7	8	<0.050	108	696	161.0	322
	DD-10	8	<0.050	1.62	4.31	2.44	2.79
	DD-11	1	<0.050			0.608	0.608
	DD-12	9	<0.050	154	82	270	169
	EE-2	8	0.011		53.8		53.8
	EE-4	8	0.011		11.1	49.7	30.4
	A-3	1	<0.09	<0.01	1.0		<0.6
	A-4	1	<0.09	110	150		130
	B-5	1		1,200			1,200
	C-6	1	2	1,200			1,200
	C-7	1	2	1.4			1.4
	D-3	6	0.2	110			110
	D-5	6	0.2	100			100
	E-5	3	<0.09	330	750	450	510
	H-4	1	<0.09	200			200
	H-5	1	<0.09	130	300		215
	H-6	1	<0.09	9.8	16		13
	K-2	1	<0.1	9.7	13	16	13
	K-3	1	<0.1	270	350	280	300
	L-5	7		56.5			56.5
	L-6	3		170	130	120	140
	N-6	6	<0.5	40			40
	N-8	1	<0.5	7.1			7.1
	Q-2	3	<0.5	94	51	100	82
	R-6	3	<0.5	1,300	64	640	668
	R-7	3	<0.5	54	56	43	51
ammonia nitrogen	BB-4	9	0.05	0.35	0.53	<0.05	<0.31
	BB-6	8	0.05	1.9	0.26	0.20	0.79
	BB-8	1	0.05			0.04	0.04
	BB-10	1	0.05			0.04	0.04
	DD-5	9	<0.01	0.34	0.36	0.30	0.33
	DD-7	8	<0.01	5.80	0.28	<0.05	<2.04
	DD-10	8	<0.01	0.48	0.94	6.3	2.57
	DD-11	1	<0.01			1.65	1.65
	DD-12	9	<0.01	0.34	0.39	2.3	1.01
	EE-2	8	<0.05		0.19		0.19
	EE-4	8	<0.05		70	<0.05	<35

Table V-57 (Continued)

SAMPLING DATA
CLEANING OR ETCHING RINSE
RAW WASTEWATER

Pollutant	Stream Code	Sample Type	Source	Concentrations (mg/l) Day 1	Day 2	Day 3	Average
barium	BB-4	9	<0.150	0.150	0.200	0.200	0.180
	BB-6	8	<0.150	<0.050	<0.050	<0.050	<0.050
	BB-8	1	<0.150			<0.050	<0.050
	BB-10	1	<0.150			<0.050	<0.050
	CC-5	3	<0.050	0.100	0.150	0.100	0.120
	DD-5	9	0.179	0.079	0.061	0.089	0.076
	DD-7	8	0.179	0.074	0.133	0.092	0.099
	DD-10	8	0.179	0.077	0.075	0.101	0.084
	DD-11	1	0.179			<0.020	<0.020
	DD-12	9	0.179	0.089	0.099	0.172	0.120
	EE-2	8	<0.021		<0.020		<0.020
	EE-4	8	<0.021		<0.020	0.025	<0.023
boron	BB-4	9	0.800	<0.100	<0.100	<0.100	<0.100
	BB-6	8	0.800	0.300	0.200	0.200	0.230
	BB-8	1	0.800			0.200	0.200
	BB-10	1	0.800			0.300	0.300
	CC-5	3	0.400	0.100	0.400	0.300	0.270
	DD-5	9	<0.100	<0.100	<0.100	<0.100	<0.100
	DD-7	8	<0.100	<0.100	<0.100	<0.100	<0.100
	DD-10	8	<0.100	<0.100	<0.100	<0.100	<0.100
	DD-11	1	<0.100			<0.100	<0.100
	DD-12	9	<0.100	<0.100	<0.100	<0.100	<0.100
	EE-2	8	<0.050		<0.050		<0.050
	EE-4	8	<0.050		<0.050	<0.050	<0.050

Table V-57 (Continued)

SAMPLING DATA
CLEANING OR ETCHING RINSE
RAW WASTEWATER

Pollutant	Stream Code	Sample Type	Source	Concentrations (mg/l) Day 1	Day 2	Day 3	Average
calcium	A-3	1	39	42	31		37
	A-4	1	39	8.1	0.9		4.5
	B-5	1		0.34			0.34
	C-6	1	12	<0.03			<0.03
	C-7	1	12	31			31
	D-3	6	38	20			20
	D-5	6	38	16			16
	E-5	3	68	0.14	<0.03	0.08	<0.08
	H-4	1	52	0.6			0.6
	H-5	1	52	3.2	0.2		1.7
	H-6	1	52	56	66		61
	K-2	1	ND	38	38	38	38
	K-3	1	ND	1.4	1.5	0.7	1.2
	L-5	7		10			10
	L-6	3		11	10	9	10
	N-6	6	28	24			24
	N-8	1	28	38			38
	Q-2	3	61	48	57	62	56
	R-6	3	60	54	66	48	56
	R-7	3	60	49	60	52	54
	BB-4	9	4.800	78.7	84.1	84.3	82.4
	BB-6	8	4.800	<0.020	5.000	5.000	<3.34
	BB-8	1	4.800			4.600	4.600
	BB-10	1	4.800			7.100	7.100
	CC-5	3	36.9	127.0	132.0	134.0	131.0
	DD-5	9	5.68	116	536	5.42	219
	DD-7	8	5.68	604	5,210	200	2,000
	DD-10	8	5.68	48.92	335	5.68	130
	DD-11	1	5.68			1.37	1.37
	DD-12	9	5.68	500	471	112	361
	EE-2	8	4.62		4.20		4.20
	EE-4	8	4.62		4.3	3.96	4.13

Table V-57 (Continued)

SAMPLING DATA
CLEANING OR ETCHING RINSE
RAW WASTEWATER

Pollutant	Stream Code	Sample Type	Source	Concentrations (mg/l) Day 1	Day 2	Day 3	Average
chemical oxygen demand (COD)	A-3	1	8	5			5
	A-4	1	8	12			12
	B-5	1	<5	<5			<5
	C-6	1	<5	230			230
	C-7	1	<5	<5			<5
	D-3	6		35			35
	D-5	6		75			75
	E-5	3	<5	184	357	89	210
	H-5	1		12	28		20
	H-6	1		<5	7		<6
	K-2	1	5	8	8	10	9
	K-3	1	5	23	27	20	23
	L-5	7	<5	20			20
	L-6	3	<5	10	7	9	9
	N-6	6	5	243			243
	N-8	1	5	36			36
	Q-2	3		14	127	20	54
	R-6	3		392	251	82	242
	R-7	1		20	20	8	16
	BB-4	9	9	685	691	590	655
	BB-6	8	9	<1	<1	45	<16
	BB-8	1	9			23	23
	BB-10	1	9			838	838
	DD-5	9	<0.5	45	98	29	57
	DD-7	8	<0.5	98	290	260	216
	DD-10	8	<0.5	<0.5	50	38	<30
	DD-11	1	<0.5			230	230
	DD-12	9	<0.5	85	140	82	102
	EE-2	8	48		75		75
	EE-4	8	48		80	200	140
chloride	BB-4	9	17	21	19	17	19
	BB-6	8	17	15	14	15	15
	BB-8	1	17			16	16
	BB-10	1	17			17	17
	CC-5	3	24	62	37	74	58
	DD-5	9	61	61	61	62	61
	DD-7	8	61	59	60	59	59
	DD-10	8	61	61	60	60	60
	DD-11	1	61			<3	<3
	DD-12	9	61	65	66	69	67
	EE-2	8	<0.05		<0.3		<0.3
	EE-4	8	<0.05		<0.05	<0.05	<0.05

Table V-57 (Continued)

SAMPLING DATA
CLEANING OR ETCHING RINSE
RAW WASTEWATER

Pollutant	Stream Code	Sample Type	Source	Concentrations (mg/l) Day 1	Day 2	Day 3	Average
cobalt	BB-4	9	<0.150	<0.050	<0.050	<0.050	<0.050
	BB-6	8	<0.150	<0.050	<0.050	<0.050	<0.050
	BB-8	1	<0.150			<0.050	<0.050
	BB-10	1	<0.150			<0.050	<0.050
	CC-5	3	<0.050	<0.050	<0.050	<0.050	<0.050
	DD-5	9	<0.010	0.015	<0.010	<0.010	<0.012
	DD-7	8	<0.010	<0.010	<0.010	200	<67
	DD-10	8	<0.010	<0.010	<0.010	<0.010	<0.010
	DD-11	1	<0.010			0.031	0.031
	DD-12	9	<0.010	0.015	<0.010	<0.010	<0.012
	EE-2	8	<0.010		0.025		0.025
	EE-4	8	<0.010		<0.010	<0.010	<0.010
dissolved solids	A-3	1		160	162		161
	A-4	1		601	772		687
	B-5	1		20			20
	C-6	1		5,972			5,972
	C-7	1		206			206
	D-3	6		2,053			2,053
	D-5	6		760			760
	E-5	3		2,530	4,430		3,480
	H-4	1	173	18,720			18,720
	H-5	1	173	649	1,809		1,229
	H-6	1	173	505	469		487
	K-2	1	164	386	445	378	403
	K-3	1	164	1,157	1,647	210	1,005
	L-5	7		770			770
	L-6	3		160	690	550	470
	N-6	6		660			660
	N-8	1		250			250
	Q-2	3	346	650	450	580	560
	R-6	3		2,430	3,660	2,410	2,830
	R-7	1		660	560	980	730
	BB-4	9	310	781	490	480	580
	BB-6	8	310	3,120	2,730	3,200	3,020
	BB-8	1	310			220	220
	BB-10	1	310			950	950
	CC-5	3	300	620	495	110	410
	DD-5	9	670	590	850	460	630
	DD-7	8	670	1,840	2,300	3,500	2,550
	DD-10	8	670	650	750	500	630
	DD-11	1	670			380	380
	DD-12	9	670	1,200	1,140	1,300	1,210
	EE-2	8	28		310		310
	EE-4	8	28		380	180	280

Table V-57 (Continued)

SAMPLING DATA
CLEANING OR ETCHING RINSE
RAW WASTEWATER

Pollutant	Stream Code	Sample Type	Source	Concentrations (mg/l) Day 1	Day 2	Day 3	Average
fluoride	BB-4	9	<0.05	<0.05	0.34	0.67	<0.35
	BB-6	8	<0.05	<0.05	<0.05	<0.05	<0.05
	BB-8	1	<0.05			0.16	0.16
	BB-10	1	<0.05			0.69	0.69
	CC-5	3	0.73	2.2	0.18	<0.05	<0.81
	DD-5	9	0.29	0.18	0.26	0.60	0.35
	DD-7	8	0.29	0.11	0.11	0.22	0.15
	DD-10	8	0.29	0.27	0.23	0.70	0.40
	DD-11	1	0.29			0.28	0.28
	DD-12	9	0.29	0.27	0.35	0.31	0.31
	EE-2	8	0.67		0.39		0.39
	EE-4	8	0.67		82	26	54
iron	BB-4	9	<0.150	1.8	1.3	1.4	1.5
	BB-6	8	<0.150	6.15	6.25	6.75	6.38
	BB-8	1	<0.150			<0.050	<0.050
	BB-10	1	<0.150			0.350	0.350
	CC-5	3	0.050	0.050	0.100	<0.050	<0.070
	DD-5	9	0.054	0.106	0.081	0.062	0.083
	DD-7	8	0.054	4.79	4.18	3.53	4.17
	DD-10	8	0.054	0.294	0.270	1.92	0.828
	DD-11	1	0.054			0.112	0.112
	DD-12	9	0.054	4.20	1.10	3.79	3.03
	EE-2	8	0.081		0.131		0.131
	EE-4	8	0.081		0.327	1.33	0.83

Table V-57 (Continued)

SAMPLING DATA
CLEANING OR ETCHING RINSE
RAW WASTEWATER

Pollutant	Stream Code	Sample Type	Source	Concentrations (mg/l) Day 1	Day 2	Day 3	Average
magnesium	A-3	1		6.8	6.0		6.4
	A-4	1		0.33	2.2		1.3
	B-5	1		0.19			0.19
	C-6	1		0.09			0.09
	C-7	1		4.8			4.8
	D-3	6		17			17
	D-5	6		9.9			9.9
	E-5	3		0.4	0.02	1.0	0.4
	H-4	1		18.0			18.0
	H-5	1		0.3	<0.02		<0.2
	H-6	1		8.0	11.0		9.5
	K-2	1		9.2	9.6	10.0	9.6
	K-3	1		1.0	0.5	<0.01	<0.5
	L-5	7		3.47			3.47
	L-6	3		2.59	2.50	2.62	2.57
	N-6	6	4.39	4.87			4.87
	N-8	1	4.39	10.33			10.33
	Q-2	3		13.6	14.0	17.5	15.0
	R-6	3		38.2	34.4	39.0	37.2
	R-7	3		22.9	21.5	19.1	21.2
	BB-4	9	0.500	25.8	26.9	27.3	26.7
	BB-6	8	0.500	3.300	3.200	3.600	3.400
	BB-8	1	0.500			0.200	0.200
	BB-10	1	0.500			0.300	0.300
	CC-5	3	7.0	12.3	13.0	10.6	12.0
	DD-5	9	108	20	82	9.9	37
	DD-7	8	108	1.70	827	145	325
	DD-10	8	108	12.2	6.8	4.66	7.9
	DD-11	1	108			0.196	0.196
	DD-12	9	108	2.8	3.42	101	35.7
	EE-2	8	1.68		4.93		4.93
	EE-2	8	1.68		746.5	4.74	376
manganese	BB-4	9	<0.150	0.100	0.100	0.100	0.100
	BB-6	8	<0.150	0.050	0.050	0.050	0.050
	BB-8	1	<0.150			<0.050	<0.050
	BB-10	1	<0.150			<0.050	<0.050
	CC-5	3	<0.050	<0.050	<0.050	<0.050	<0.050
	DD-5	9	<0.010	0.011	<0.010	<0.010	<0.010
	DD-7	8	<0.010	0.098	0.087	0.093	0.093
	DD-10	8	<0.010	0.031	<0.010	<0.010	<0.017
	DD-11	1	<0.010			<0.010	<0.010
	DD-12	9	<0.010	0.103	0.015	0.054	0.057
	EE-2	8	0.016		0.086		0.086
	EE-4	8	0.016		0.028	0.109	0.069

Table V-57 (Continued)

SAMPLING DATA
CLEANING OR ETCHING RINSE
RAW WASTEWATER

Pollutant	Stream Code	Sample Type	Source	Concentrations (mg/l) Day 1	Day 2	Day 3	Average
molybdenum	BB-4	9	<0.150	<0.050	<0.050	<0.050	<0.050
	BB-6	8	<0.150	<0.050	<0.050	<0.050	<0.050
	BB-8	1	<0.150			<0.050	<0.050
	BB-10	1	<0.150			<0.050	<0.050
	CC-5	3	<0.050	<0.050	<0.050	<0.050	<0.050
	DD-5	9	<0.020	<0.020	<0.020	<0.020	<0.020
	DD-7	8	<0.020	<0.020	<0.020	<0.020	<0.020
	DD-10	8	<0.020	<0.020	<0.020	<0.020	<0.020
	DD-11	1	<0.020			<0.020	<0.020
	DD-12	9	<0.020	<0.020	<0.020	<0.020	<0.020
	EE-2	8	0.030		<0.020		<0.020
	EE-4	8	0.030		<0.020	<0.020	<0.020
phenols (total; by 4-AAP method)	A-3	1		0.008	0.015		0.012
	A-4	1		0.003	0.009		0.006
	B-5	1		0.012			0.012
	C-6	1		0.039			0.039
	C-7	1		0.013			0.013
	D-3	6		0.011			0.011
	D-5	6		0.014			0.014
	E-5	1		0.009	0.031	0.012	0.017
	H-5	1		0.004	0.008		0.006
	H-6	1		<0.001	0.008		0.005
	K-2	1		0.007	0.005	<0.001	<0.004
	K-3	1		0.004	0.006	<0.001	<0.004
	L-5	1		0.003			0.003
	L-6	2		0.01	0.004	0.006	0.01
	N-6	6			0.008		0.008
	N-8	1		0.008			0.008
	Q-2	1		0.066	0.009	0.012	0.029
	R-6	1		0.012	0.004		0.008
	R-7	1		0.026	0.003	0.002	0.010
	BB-4	9	0.026	0.14	0.019	0.021	0.060
	BB-6	8	0.026	0.015	<0.005	0.010	<0.010
	BB-8	1	0.026			<0.005	<0.005
	BB-10	1	0.026			0.028	0.028

Table V-57 (Continued)

SAMPLING DATA
CLEANING OR ETCHING RINSE
RAW WASTEWATER

Pollutant	Stream Code	Sample Type	Source	Concentrations (mg/l) Day 1	Day 2	Day 3	Average
phosphate	BB-4	9	21	<3	<3	<3	<3
	BB-6	8	21	66	<3	90	<53
	BB-8	1	21			<3	<3
	BB-10	1	21			<3	<3
	DD-5	9	20	12	8.2	14	11.4
	DD-7	8	20	8	25	20	18
	DD-10	8	20	8.8	4.5	6.1	6.5
	DD-11	1	20			<4	<4
	DD-12	9	20	10	<4	9.2	<7.7
	EE-2	8	8.8		80		80
	EE-4	8	8.8		130	57	94
sodium	BB-4	9	76.7	124.0	43.8	41.2	69.7
	BB-6	8	76.7	97.5	99.100	96.9	97.8
	BB-8	1	76.7			99.7	99.7
	BB-10	1	76.7			172.	172
	CC-5	7	6.80	35.8	36.4	33.6	35.3
sulfate	A-3	1		30	50		40
	A-4	1		30	50		40
	B-5	1		1			1
	C-6	1		<25			<25
	C-7	1		40			40
	D-3	6		1,263			1,263
	D-5	6		70			70
	E-5	3		39	<25	50	<38
	H-4	1	<10	130			130
	H-5	1	<10	30	130		80
	H-6	1	<10	30	20		25
	K-2	1	<10	40	50	50	50
	K-3	1	<10	60	39	70	56
	L-5	7		11			11
	L-6	3		250	280	460	330
	N-6	6		40			40
	N-8	1		60			60
	Q-2	3	67	35	9	53	32
	R-6	3		150	48	17	72
	R-7	1		170	150	190	170
	BB-4	9	90	90	82	96	89
	BB-6	8	90	4,500	180	7,500	4,060
	BB-8	1	90			20	20
	BB-10	1	90			180	180
	CC-5	3	75	300	300	300	300
	DD-5	9	180	36	60	40	45
	DD-7	8	180	6,000	1.2	4,500	3,500
	DD-10	8	180	120	225	140	162
	DD-11	1	180			105	105
	DD-12	9	180	450	750	510	570
	EE-2	8	21		12		12
	EE-4	8	21		17	36	27

Table V-57 (Continued)

SAMPLING DATA
CLEANING OR ETCHING RINSE
RAW WASTEWATER

Pollutant	Stream Code	Sample Type	Source	Concentrations (mg/l) Day 1	Day 2	Day 3	Average
tin	BB-4	9	<0.150	<0.050	<0.050	<0.050	<0.050
	BB-6	8	<0.150	<0.500	<0.500	<0.500	<0.500
	BB-8	1	<0.150			<0.050	<0.050
	BB-10	1	<0.150			<0.050	<0.050
	CC-5	3	<0.050	<0.050	<0.050	<0.050	<0.050
	DD-5	9	<0.020	<0.020	<0.020	<0.020	<0.020
	DD-7	8	<0.020	0.087	<0.020	<0.020	<0.042
	DD-10	8	<0.020	<0.020	4.81	<0.020	<1.62
	DD-11	1	<0.020			<0.020	<0.020
	DD-12	9	<0.020	0.527	<0.020	0.082	<0.210
	EE-2	8	<0.020		<0.020		<0.020
	EE-4	8	<0.020		0.021	<0.020	<0.021
titanium	BB-4	9	<0.150	<0.050	<0.050	<0.050	<0.050
	BB-6	8	<0.150	0.100	0.100	0.100	0.100
	BB-8	1	<0.150			<0.050	<0.050
	BB-10	1	<0.150			<0.050	<0.050
	CC-5	3	<0.050	<0.050	<0.050	<0.050	<0.050
	DD-5	9	<0.010	<0.010	<0.010	<0.010	<0.010
	DD-7	8	<0.010	<0.010	<0.010	<0.010	<0.010
	DD-10	8	<0.010	<0.010	<0.010	<0.010	<0.010
	DD-11	1	<0.010			<0.010	<0.010
	DD-12	9	<0.010	<0.010	0.115	<0.010	<0.045
	EE-2	8	<0.010		<0.010		<0.010
	EE-4	8	<0.010		0.017	0.018	0.018

Table V-57 (Continued)

SAMPLING DATA
CLEANING OR ETCHING RINSE
RAW WASTEWATER

Pollutant	Stream Code	Sample Type	Source	Concentrations (mg/l) Day 1	Day 2	Day 3	Average
total organic carbon (TOC)	A-3	1	9	3			3
	A-4	1	9	7			7
	B-5	1	35	<1			<1
	C-6	1	<1	109			109
	C-7	1	<1	<1			<1
	D-3	6		5			5
	D-5	6		45			45
	E-5	3	1	51	138	21	70
	H-5	1		10	5		8
	H-6	1		<1	7		<4
	K-2	1	6	8	6	<1	<5
	K-3	1	6	8	14	7	10
	L-5	7	2.8	13			13
	L-6	3	2.8	6	7.4	2.8	5
	N-6	6	2.7	184			184
	N-8	1	2.7	16			16
	Q-2	3		1.5	1.8	0.67	1.3
	R-6	3		30	53	13	32
	R-7	1		3.7	9.2	3.3	5.4
	BB-4	9	<1	160	170	121	150
	BB-6	8	<1	<1	6.6	4	<3.9
	BB-8	1	<1			<1	<1
	BB-10	1	<1			400	400
	DD-5	9	<1	2.5	<1	<1	<1.5
	DD-7	8	<1	94	99	110	101
	DD-10	8	<1	<1	2.0	3.8	<2.3
	DD-11	1	<1			87	87
	DD-12	9	<1	31	12	20	21
	EE-2	8	<1		11		11
	EE-4	8	<1		41	24	33
total solids (TS)	BB-4	9	267	917	690	610	739
	BB-6	8	267	8,310	6,000	8,840	7,120
	BB-8	1	267			300	300
	BB-10	1	267			967	967
	CC-5	3	204	703	718	130	517
	DD-5	9	380	510	540	540	530
	DD-7	8	380	5,000	5,600	7,350	5,980
	DD-10	8	380	550	690	550	600
	DD-11	1	380			320	320
	DD-12	9	380	2,300	1,900	2,400	2,200
	EE-2	8	30		290		290
	EE-4	8	30		380	190	285

Table V-57 (Continued)

SAMPLING DATA
CLEANING OR ETCHING RINSE
RAW WASTEWATER

Pollutant	Stream Code	Sample Type	Source	Concentrations (mg/l) Day 1	Day 2	Day 3	Average
vanadium	BB-4	9	<0.150	<0.050	<0.050	<0.050	<0.050
	BB-6	8	<0.150	<0.050	<0.050	<0.050	<0.050
	BB-8	1	<0.150			<0.050	<0.050
	BB-10	1	<0.150			<0.050	<0.050
	CC-5	3	<0.050	<0.050	<0.050	<0.050	<0.050
	DD-5	9	0.026	0.030	<0.020	<0.020	<0.023
	DD-7	8	0.026	<0.020	<0.020	<0.020	<0.020
	DD-10	8	0.026	<0.020	<0.020	<0.020	<0.020
	DD-11	1	0.026			<0.020	<0.020
	DD-12	9	0.026	0.027	0.027	0.023	0.026
	EE-2	8	<0.020		<0.020		<0.020
	EE-4	8	<0.020		<0.020	<0.020	<0.020
yttrium	BB-4	9	<0.150	<0.050	<0.050	<0.050	<0.050
	BB-6	8	<0.150	<0.050	<0.050	<0.050	<0.050
	BB-8	1	<0.150			<0.050	<0.050
	BB-10	1	<0.150			<0.050	<0.050
	CC-5	3	<0.050	<0.050	<0.050	<0.050	<0.050
	DD-5	9	<0.020	<0.020	<0.020	<0.020	<0.020
	DD-7	8	<0.020	<0.020	<0.020	<0.020	<0.020
	DD-10	8	<0.020	<0.020	<0.020	<0.020	<0.020
	DD-11	1	<0.020			<0.020	<0.020
	DD-12	9	<0.020	<0.020	<0.020	<0.020	<0.020
	EE-2	8	<0.020		<0.020		<0.020
	EE-4	8	<0.020		<0.020	<0.020	<0.020

Table V-57 (Continued)

SAMPLING DATA
CLEANING OR ETCHING RINSE
RAW WASTEWATER

Pollutant	Stream Code	Sample Type	Source	Concentrations (mg/l) Day 1	Day 2	Day 3	Average
Conventional Pollutants							
suspended solids	A-3	1	<1	2			2
	A-4	1	<1	310			310
	B-5	1	138	1			1
	C-6	1	<1	90			90
	C-7	1	<1	<1			<1
	D-3	6		23			23
	D-5	6		120			120
	E-5	3	<1	200	300	170	223
	H-5	1		363	298		331
	H-6	1		49	48		49
	K-2	1	13	13	151	10	58
	K-3	1	13	249	49	1	100
	L-5	7	<2	<2			<2
	L-6	3	<2	622	512	494	543
	N-6	6	<2	52			52
	N-8	1	<2	19			19
	Q-2	3		352	188	360	300
	R-6	3		3,640	2,140	2,230	2,670
	R-7	1		250	230	160	210
	BB-4	9	8	31	120	73	75
	BB-6	8	8	18	19	<1	<13
	BB-8	1	8			<1	<1
	BB-10	1	8			25	25
	CC-5	3	<1	25	29	7	20
	DD-5	9	1	81	66	101	83
	DD-7	8	1	4.7	17	17	13
	DD-10	8	1	3	36	61	33
	DD-11	1	1			1.0	1.0
	DD-12	9	1	1,200	840	1,200	1,080
	EE-2	8	3		1.0		1.0
	EE-4	8	3		11.7	12	11.9

Table V-57 (Continued)

SAMPLING DATA
CLEANING OR ETCHING RINSE
RAW WASTEWATER

Pollutant	Stream Code	Sample Type	Source	Concentrations (mg/l) Day 1	Day 2	Day 3	Average
pH (standard units)	A-3	1		8			8
	A-4	1		6			6
	B-5	1		6.9			6.9
	C-6	1		11.8			11.8
	C-7	1		2.2			2.2
	D-3	1		3.5	4	3.3	4
	D-5	1		11.2	10.8	11.2	11.1
	E-5	1		9.8	11.6	10.5	10.6
	K-2	1		2.5	2.5	2.2	2.4
	K-3	1		11.3	11.7	10.8	11.3
	L-5	1		2.5			2.5
	L-6	1		3.6	2.1	2.0	2.6
	N-6	1	7.1	9.4	9.1	9.4	9.3
	N-8	1	7.1	8.1			8.1
	Q-2	1		5.7	8.9		7.3
	R-6	1		9.2	7.7	7.3	8.1
	R-7	1		6.3			6.3
	BB-4	9	7.68	8.74	7.59	7.74	8.02
	BB-6	8	7.68	0.99	1.14	1.00	1.04
	BB-8	1	7.68			6.38	6.38
	BB-10	1	7.68			5.22	5.22
	CC-5	3	5.35	8.79	6.39	7.19	7.46
	DD-5	9	7.03	7.55	7.82	7.98	7.78
	DD-7	8	7.03	0.87	1.30	0.55	0.91
	DD-10	8	7.03	6.97	6.41	6.63	6.67
	DD-11	1	7.03			6.49	6.49
	DD-12	9	7.03	9.09	8.74	9.65	9.16
	EE-2	8	6.05		8.51		8.51
	EE-4	8	6.05		7.06	6.99	7.03

Table V-57 (Continued)

SAMPLING DATA
CLEANING OR ETCHING RINSE
RAW WASTEWATER

Pollutant	Stream Code	Sample Type	Source	Concentrations (mg/l) Day 1	Day 2	Day 3	Average
oil and grease	A-3	1		4			4
	A-4	1		2			2
	C-6	1		16			16
	C-7	1		11			11
	D-3	1		5			5
	D-5	1		47			47
	E-5	1		76	22	31	43
	H-5	1		16	18		17
	H-6	1		14	13		14
	K-2	1	3	10	7	7	8
	K-3	1	3	15	6	3	8
	L-5	1		5			5
	L-6	1		53	7	5	22
	N-6	1	<5	10	<5	17	<11
	Q-2	1		<5	<5	<5	<5
	R-6	1		14	105	6	42
	R-7	1		<5	146	13	<55
	BB-4	9	<1	200	470	490	390
	BB-6	8	<1	<1	16	<1	<6
	BB-8	1	<1			<1	<1
	BB-10	1	<1			2.3	2.3
	CC-5	3	<1	7	<1	<1	<3
	DD-5	9	<1	<1	4	5	<3
	DD-7	8	<1	5	<1	6	<4
	DD-10	8	<1	<1	2	4	<2
	DD-11	1	<1			<1	<1
	DD-12	9	<1	<1	4	6	<4
	EE-2	8	3		11		11
	EE-4	8	3		48	14	31

"2" Average of duplicates.

(a), (b) Reported together.

Table V-58

CLEANING OR ETCHING SCRUBBER LIQUOR

Plant	Water Use l/kkg	Water Use gal/ton	Percent Recycle	Wastewater l/kkg	Wastewater gal/ton
1	*	*	*	1,880	451.0
2	*	*	*	1,985	476.0
3	*	*	*	12,002	2,880
4	47,780	11,460	0	47,780	11,460
5	*	*	*	*	*
6	*	*	*	*	*
7	*	*	*	*	*

*Data not available.

Statistical Summary

Minimum	1,880	451.0
Maximum	47,780	11,460
Mean	15,911	3,817
Median	6,994	1,678
Sample:	4 of 7 plants	

Table V-59

FREQUENCY OF OCCURRENCE OF TOXIC POLLUTANTS
CLEANING OR ETCHING SCRUBBER LIQUOR
RAW WASTEWATER

	Pollutant	Analytical Quantification Level (mg/l)	Number of Streams Analyzed	Number of Samples Analyzed	Number of Times Observed in Samples (mg/l)			
					ND-0.010	0.011-0.100	0.101-1.000	1.000+
1.	acenaphthene	0.010	1	1	1			
2.	acrolein	0.010	1	1	1			
3.	acrylonitrile	0.010	1	1	1			
4.	benzene	0.010	1	1	1			
5.	benzidine	0.010	1	1	1			
6.	carbon tetrachloride	0.010	1	1	1			
7.	chlorobenzene	0.010	1	1	1			
8.	1,2,4-trichlorobenzene	0.010	1	1	1			
9.	hexachlorobenzene	0.010	1	1	1			
10.	1,2-dichloroethane	0.010	1	1	1			
11.	1,1,1-trichloroethane	0.010	1	1	1			
12.	hexachloroethane	0.010	1	1	1			
13.	1,1-dichloroethane	0.010	1	1	1			
14.	1,1,2-trichloroethane	0.010	1	1	1			
15.	1,1,2,2-tetrachloroethane	0.010	1	1	1			
16.	chloroethane	0.010	1	1	1			
17.	bis(chloromethyl)ether	0.010	1	1	1			
18.	bis(chloroethyl)ether	0.010	1	1	1			
19.	2-chloroethyl vinyl ether	0.010	1	1	1			
20.	2-chloronaphthalene	0.010	1	1	1			
21.	2,4,6-trichlorophenol	0.010	1	1	1			
22.	p-chloro-m-cresol	0.010	1	1	1			
23.	chloroform	0.010	1	1	1			
24.	2-chlorophenol	0.010	1	1	1			
25.	1,2-dichlorobenzene	0.010	1	1	1			
26.	1,3-dichlorobenzene	0.010	1	1	1			
27.	1,4-dichlorobenzene	0.010	1	1	1			
28.	3,3'-dichlorobenzidine	0.010	1	1	1			
29.	1,1-dichloroethylene	0.010	1	1	1			
30.	1,2-trans-dichloroethylene	0.010	1	1	1			
31.	2,4-dichlorophenol	0.010	1	1	1			
32.	1,2-dichloropropane	0.010	1	1	1			
33.	1,3-dichloropropene	0.010	1	1	1			
34.	2,4-dimethylphenol	0.010	1	1	1			
35.	2,4-dinitrotoluene	0.010	1	1	1			
36.	2,6-dinitrotoluene	0.010	1	1	1			
37.	1,2-diphenylhydrazine	0.010	1	1	1			
38.	ethylbenzene	0.010	1	1	1			
39.	fluoranthene	0.010	1	1	1			

Table V-59 (Continued)

FREQUENCY OF OCCURRENCE OF TOXIC POLLUTANTS
CLEANING OR ETCHING SCRUBBER LIQUOR
RAW WASTEWATER

	Pollutant	Analytical Quantification Level (mg/l)	Number of Streams Analyzed	Number of Samples Analyzed	Number of Times Observed in Samples (mg/l) ND-0.010	0.011-0.100	0.101-1.000	1.000+
40.	4-chlorophenyl phenyl ether	0.010	1	1	1			
41.	4-bromophenyl phenyl ether	0.010	1	1	1			
42.	bis(2-chloroisopropyl)ether	0.010	1	1	1			
43.	bis(2-chloroethoxy)methane	0.010	1	1	1			
44.	methylene chloride	0.010	1	1		1		
45.	methyl chloride (chloromethane)	0.010	1	1	1			
46.	methyl bromide (bromomethane)	0.010	1	1	1			
47.	bromoform (tribromomethane)	0.010	1	1	1			
48.	dichlorobromomethane	0.010	1	1	1			
49.	trichlorofluoromethane	0.010	1	1	1			
50.	dichlorodifluoromethane	0.010	1	1	1			
51.	chlorodibromomethane	0.010	1	1	1			
52.	hexachlorobutadiene	0.010	1	1	1			
53.	hexachlorocyclopentadiene	0.010	1	1	1			
54.	isophorone	0.010	1	1	1			
55.	naphthalene	0.010	1	1	1			
56.	nitrobenzene	0.010	1	1	1			
57.	2-nitrophenol	0.010	1	1	1			
58.	4-nitrophenol	0.010	1	1	1			
59.	2,4-dinitrophenol	0.010	1	1	1			
60.	4,6-dinitro-o-cresol	0.010	1	1	1			
61.	N-nitrosodimethylamine	0.010	1	1	1			
62.	N-nitrosodiphenylamine	0.010	1	1	1			
63.	N-nitrosodi-n-propylamine	0.010	1	1	1			
64.	pentachlorophenol	0.010	1	1	1			
65.	phenol	0.010	1	1	1			
66.	bis (2-ethylhexyl) phthalate	0.010	1	1	1			
67.	butyl benzyl phthalate	0.010	1	1	1			
68.	di-n-butyl phthalate	0.010	1	1	1			
69.	di-n-octyl phthalate	0.010	1	1	1			
70.	diethyl phthalate	0.010	1	1	1			
71.	dimethyl phthalate	0.010	1	1	1			
72.	benzo(a)anthracene	0.010	1	1	1			
73.	benzo(a)pyrene	0.010	1	1	1			
74.	benzo(b)fluoranthene	0.010	1	1	1			
75.	benzo(k)fluoranthene	0.010	1	1	1			
76.	chrysene	0.010	1	1	1			
77.	acenaphthylene	0.010	1	1	1			
78.	anthracene (a)	0.010	1	1	1			

Table V-59 (Continued)

FREQUENCY OF OCCURRENCE OF TOXIC POLLUTANTS
CLEANING OR ETCHING SCRUBBER LIQUOR
RAW WASTEWATER

	Pollutant	Analytical Quantification Level (mg/l)	Number of Streams Analyzed	Number of Samples Analyzed	Number of Times Observed in Samples (mg/l) ND-0.010	0.011-0.100	0.101-1.000	1.000+
79.	benzo(ghi)perylene	0.010	1	1	1			
80.	fluorene	0.010	1	1	1			
81.	phenanthrene (a)	0.010	-	-				
82.	dibenzo(a,h)anthracene	0.010	1	1	1			
83.	indeno (1,2,3-c,d)pyrene	0.010	1	1	1			
84.	pyrene	0.010	1	1	1			
85.	tetrachloroethylene	0.010	1	1	1			
86.	toluene	0.010	1	1	1			
87.	trichloroethylene	0.010	1	1	1			
88.	vinyl chloride (chloroethylene)	0.010	1	1	1			
89.	aldrin	0.005	1	1	1			
90.	dieldrin	0.005	1	1	1			
91.	chlordane	0.005	1	1	1			
92.	4,4'-DDT	0.005	1	1	1			
93.	4,4'-DDE	0.005	1	1	1			
94.	4,4'-DDD	0.005	1	1	1			
95.	alpha-endosulfan	0.005	1	1	1			
96.	beta-endosulfan	0.005	1	1	1			
97.	endosulfan sulfate	0.005	1	1	1			
98.	endrin	0.005	1	1	1			
99.	endrin aldehyde	0.005	1	1	1			
100.	heptachlor	0.005	1	1	1			
101.	heptachlor epoxide	0.005	1	1	1			
102.	alpha-BHC	0.005	1	1	1			
103.	beta-BHC	0.005	1	1	1			
104.	gamma-BHC	0.005	1	1	1			
105.	delta-BHC	0.005	1	1	1			
106.	PCB-1242 (b)	0.005	1	1	1			
107.	PCB-1254 (b)	0.005	-	-				
108.	PCB-1221 (b)	0.005	-	-				
109.	PCB-1232 (b)	0.005	-	-				
110.	PCB-1248 (c)	0.005	1	1	1			
111.	PCB-1260 (c)	0.005	-	-				
112.	PCB-1016 (c)	0.005	-	-				
113.	toxaphene	0.005	1	1	1			
114.	antimony	0.100	1	1	1			
115.	arsenic	0.010	1	1	1			
116.	asbestos	10 MFL	0	0				

Table V-59 (Continued)

FREQUENCY OF OCCURRENCE OF TOXIC POLLUTANTS
CLEANING OR ETCHING SCRUBBER LIQUOR
RAW WASTEWATER

Pollutant	Analytical Quantification Level (mg/l)	Number of Streams Analyzed	Number of Samples Analyzed	Number of Times Observed in Samples (mg/l)			
				ND-0.010	0.011-0.100	0.101-1.000	1.000+
117. beryllium	0.010	1	1	1			
118. cadmium	0.002	1	1	1			
119. chromium (total)	0.005	1	1	1			
120. copper	0.009	1	1	1			
121. cyanide (total)	0.010	1	1	1			
122. lead	0.020	1	1	1			
123. mercury	0.0001	1	1	1			
124. nickel	0.005	1	1	1			
125. selenium	0.01	1	1	1			
126. silver	0.02	1	1	1			
127. thallium	0.100	1	1	1			
128. zinc	0.050	1	1	1			
129. 2,3,7,8-tetrachlorodibenzo-p-dioxin	0.005	0	0				

(a), (b), (c) Reported together.

Table V-60

SAMPLING DATA
CLEANING OR ETCHING SCRUBBER LIQUOR
RAW WASTEWATER

Pollutant	Stream Code	Sample Type	Source	Concentrations (mg/l) Day 1	Day 2	Day 3	Average
Toxic Pollutants							
44. methylene chloride	C-8	1	0.220	0.014			0.014
120. copper	C-8	1	0.020	0.010			0.010
124. mercury	C-8	1	0.0004	0.0003			0.0003
Nonconventional							
alkalinity	C-8	1		110			110
aluminum	C-8	1	2	5.1			5.1
calcium	C-8	1	12	27			27
chemical oxygen demand (COD)	C-8	1	<5	<5			<5
dissolved solids	C-8	1		159			159
magnesium	C-8	1	4.6	5.2			5.2
phenols (total; by 4-AAP method)	C-8	1		0.016			0.016
sulfate	C-8	1		40			40
total organic carbon (TOC)	C-8	1	<1	<1			<1
Conventional							
oil and grease	C-8	1		13			13
suspended solids	C-8	1	<1	12			12
pH (standard units)	C-8	1	8.1	8.1			

Table V-61

FORGING SCRUBBER LIQUOR

Plant	Water Use l/kkg	Water Use gal/ton	Percent Recycle	Wastewater l/kkg	Wastewater gal/ton
1	*	*	P	28.85	6.920
2	*	*	P	159.7	38.31
3	5,937	1,424	0	4,453	1,068
4	*	*	*	*	*

*Data not available.
P Periodic discharge.

Statistical Summary

Minimum	28.85	6.920
Maximum	4,453	1,068
Mean	1,547	371.1
Median	159.7	38.31
Sample:	3 of 4 plants	

Table V-62

FREQUENCY OF OCCURRENCE OF TOXIC POLLUTANTS
FORGING SCRUBBER LIQUOR
RAW WASTEWATER

	Pollutant	Analytical Quantification Level (mg/l)	Number of Streams Analyzed	Number of Samples Analyzed	Number of Times Observed in Samples (mg/l) ND-0.010	0.011-0.100	0.101-1.000	1.000+
1.	acenaphthene	0.010	1	1	1			
2.	acrolein	0.010	1	1	1			
3.	acrylonitrile	0.010	1	1	1			
4.	benzene	0.010	1	1	1			
5.	benzidine	0.010	1	1	1			
6.	carbon tetrachloride	0.010	1	1	1			
7.	chlorobenzene	0.010	1	1	1			
8.	1,2,4-trichlorobenzene	0.010	1	1	1			
9.	hexachlorobenzene	0.010	1	1	1			
10.	1,2-dichloroethane	0.010	1	1	1			
11.	1,1,1-trichloroethane	0.010	1	1	1			
12.	hexachloroethane	0.010	1	1	1			
13.	1,1-dichloroethane	0.010	1	1	1			
14.	1,1,2-trichloroethane	0.010	1	1	1			
15.	1,1,2,2-tetrachloroethane	0.010	1	1	1			
16.	chloroethane	0.010	1	1	1			
17.	bis(chloromethyl)ether	0.010	1	1	1			
18.	bis(chloroethyl)ether	0.010	1	1	1			
19.	2-chloroethyl vinyl ether	0.010	1	1	1			
20.	2-chloronaphthalene	0.010	1	1	1			
21.	2,4,6-trichlorophenol	0.010	1	1	1			
22.	p-chloro-m-cresol	0.010	1	1	1			
23.	chloroform	0.010	1	1	1			
24.	2-chlorophenol	0.010	1	1	1			
25.	1,2-dichlorobenzene	0.010	1	1	1			
26.	1,3-dichlorobenzene	0.010	1	1	1			
27.	1,4-dichlorobenzene	0.010	1	1	1			
28.	3,3'-dichlorobenzidine	0.010	1	1	1			
29.	1,1-dichloroethylene	0.010	1	1	1			
30.	1,2-trans-dichloroethylene	0.010	1	1	1			
31.	2,4-dichlorophenol	0.010	1	1	1			
32.	1,2-dichloropropane	0.010	1	1	1			
33.	1,3-dichloropropene	0.010	1	1	1			
34.	2,4-dimethylphenol	0.010	1	1	1			
35.	2,4-dinitrotoluene	0.010	1	1	1			
36.	2,6-dinitrotoluene	0.010	1	1	1			
37.	1,2-diphenylhydrazine	0.010	1	1	1			
38.	ethylbenzene	0.010	1	1	1			
39.	fluoranthene	0.010	1	1		1		

Table V-62 (Continued)

FREQUENCY OF OCCURRENCE OF TOXIC POLLUTANTS
FORGING SCRUBBER LIQUOR
RAW WASTEWATER

	Pollutant	Analytical Quantification Level (mg/l)	Number of Streams Analyzed	Number of Samples Analyzed	Number of Times Observed in Samples (mg/l) ND-0.010	0.011-0.100	0.101-1.000	1.000+
40.	4-chlorophenyl phenyl ether	0.010	1	1	1			
41.	4-bromophenyl phenyl ether	0.010	1	1	1			
42.	bis(2-chloroisopropyl)ether	0.010	1	1	1			
43.	bis(2-chloroethoxy)methane	0.010	1	1	1			
44.	methylene chloride	0.010	1	1			1	
45.	methyl chloride (chloromethane)	0.010	1	1	1			
46.	methyl bromide (bromomethane)	0.010	1	1	1			
47.	bromoform (tribromomethane)	0.010	1	1	1			
48.	dichlorobromomethane	0.010	1	1	1			
49.	trichlorofluoromethane	0.010	1	1	1			
50.	dichlorodifluoromethane	0.010	1	1	1			
51.	chlorodibromomethane	0.010	1	1	1			
52.	hexachlorobutadiene	0.010	1	1	1			
53.	hexachlorocyclopentadiene	0.010	1	1	1			
54.	isophorone	0.010	1	1	1			
55.	naphthalene	0.010	1	1	1			
56.	nitrobenzene	0.010	1	1	1			
57.	2-nitrophenol	0.010	1	1	1			
58.	4-nitrophenol	0.010	1	1	1			
59.	2,4-dinitrophenol	0.010	1	1	1			
60.	4,6-dinitro-o-cresol	0.010	1	1	1			
61.	N-nitrosodimethylamine	0.010	1	1	1			
62.	N-nitrosodiphenylamine	0.010	1	1		1		
63.	N-nitrosodi-n-propylamine	0.010	1	1	1			
64.	pentachlorophenol	0.010	1	1	1			
65.	phenol	0.010	1	1	1			
66.	bis (2-ethylhexyl) phthalate	0.010	1	1		1		
67.	butyl benzyl phthalate	0.010	1	1	1			
68.	di-n-butyl phthalate	0.010	1	1	1			
69.	di-n-octyl phthalate	0.010	1	1	1			
70.	diethyl phthalate	0.010	1	1	1			
71.	dimethyl phthalate	0.010	1	1	1			
72.	benzo(a)anthracene	0.010	1	1		1		
73.	benzo(a)pyrene	0.010	1	1	1			
74.	benzo(b)fluoranthene	0.010	1	1	1			
75.	benzo(k)fluoranthene	0.010	1	1	1			
76.	chrysene	0.010	1	1		1		
77.	acenaphthylene	0.010	1	1	1			
78.	anthracene (a)	0.010	1	1		1		

Table V-62 (Continued)

FREQUENCY OF OCCURRENCE OF TOXIC POLLUTANTS
FORGING SCRUBBER LIQUOR
RAW WASTEWATER

	Pollutant	Analytical Quantification Level (mg/l)	Number of Streams Analyzed	Number of Samples Analyzed	Number of Times Observed in Samples (mg/l) ND-0.010	0.011-0.100	0.101-1.000	1.000+
79.	benzo(ghi)perylene	0.010	1	1	1			
80.	fluorene	0.010	1	1	1			
81.	phenanthrene (a)	0.010	-	-				
82.	dibenzo(a,h)anthracene	0.010	1	1	1			
83.	indeno (1,2,3-c,d)pyrene	0.010	1	1	1			
84.	pyrene	0.010	1	1		1		
85.	tetrachloroethylene	0.010	1	1	1			
86.	toluene	0.010	1	1	1			
87.	trichloroethylene	0.010	1	1	1			
88.	vinyl chloride (chloroethylene)	0.010	1	1	1			
89.	aldrin	0.005	1	1	1			
90.	dieldrin	0.005	1	1	1			
91.	chlordane	0.005	1	1	1			
92.	4,4'-DDT	0.005	1	1	1			
93.	4,4'-DDE	0.005	1	1	1			
94.	4,4'-DDD	0.005	1	1	1			
95.	alpha-endosulfan	0.005	1	1	1			
96.	beta-endosulfan	0.005	1	1	1			
97.	endosulfan sulfate	0.005	1	1	1			
98.	endrin	0.005	1	1	1			
99.	endrin aldehyde	0.005	1	1	1			
100.	heptachlor	0.005	1	1	1			
101.	heptachlor epoxide	0.005	1	1	1			
102.	alpha-BHC	0.005	1	1	1			
103.	beta-BHC	0.005	1	1	1			
104.	gamma-BHC	0.005	1	1	1			
105.	delta-BHC	0.005	1	1	1			
106.	PCB-1242 (b)	0.005	1	1	1			
107.	PCB-1254 (b)	0.005	-	-				
108.	PCB-1221 (b)	0.005	-	-				
109.	PCB-1232 (b)	0.005	-	-				
110.	PCB-1248 (c)	0.005	1	1	1			
111.	PCB-1260 (c)	0.005	-	-				
112.	PCB-1016 (c)	0.005	-	-				
113.	toxaphene	0.005	1	1	1			
114.	antimony	0.100	1	1	1			
115.	arsenic	0.010	1	1	1			
116.	asbestos	10 MFL	0	0				

Table V-62 (Continued)

FREQUENCY OF OCCURRENCE OF TOXIC POLLUTANTS
FORGING SCRUBBER LIQUOR
RAW WASTEWATER

Pollutant	Analytical Quantification Level (mg/l)	Number of Streams Analyzed	Number of Samples Analyzed	Number of Times Observed in Samples (mg/l) ND-0.010	0.011-0.100	0.101-1.000	1.000+
117. beryllium	0.010	1	1	1			
118. cadmium	0.002	1	1	1			
119. chromium (total)	0.005	1	1	1			
120. copper	0.009	1	1	1			
121. cyanide (total)	0.010	1	1	1			
122. lead	0.020	1	1				1
123. mercury	0.0001	1	1	1			
124. nickel	0.005	1	1	1			
125. selenium	0.01	1	1	1			
126. silver	0.02	1	1	1			
127. thallium	0.100	1	1	1			
128. zinc	0.050	1	1			1	
129. 2,3,7,8-tetrachlorodibenzo-p-dioxin	0.005	0	0				

(a), (b), (c) Reported together.

Table V-63

SAMPLING DATA
FORGING SCRUBBER LIQUOR
RAW WASTEWATER

Pollutant	Stream Code	Sample Type	Source	Concentrations (mg/l) Day 1	Day 2	Day 3	Average
Toxic Pollutants							
39. fluoranthene	A-5	1	ND	0.018			0.018
44. methylene chloride	A-5	1	0.130	0.950			0.950
62. N-nitrosodiphenylamine	A-5	1	ND	0.017			0.017
66. bis (2-ethylhexyl) phthalate	A-5	1	0.200	0.075			0.075
72. benzo(a)anthracene	A-5	1	ND	0.019			0.019
76. chrysene	A-5	1	ND	0.019			0.019
78. anthracene (a) 81. phenanthrene (a)	A-5	1	ND	0.028			0.028
84. pyrene	A-5	1	ND	0.021			0.021
120. copper	A-5	1	0.010	0.010			0.010
122. lead	A-5	1	<0.20	2.000			2.000
123. mercury	A-5	1	0.0006	0.0005			0.0005
128. zinc	A-5	1	0.060	0.300			0.300
Nonconventional							
alkalinity	A-5	1		110			110
aluminum	A-5	1	<0.09	0.5			0.5
calcium	A-5	1	39	59			59
chemical oxygen demand (COD)	A-5	1	8	349			349
dissolved solids	A-5	1		388			388
magnesium	A-5	1	8.7	10.4			10.4

Table V-63 (Continued)

SAMPLING DATA
FORGING SCRUBBER LIQUOR
RAW WASTEWATER

Pollutant	Stream Code	Sample Type	Source	Concentrations (mg/l) Day 1	Day 2	Day 3	Average
phenols (total; by 4-AAP method)	A-5	1		0.067			0.067
sulfate	A-5	1		95			95
total organic carbon (TOC)	A-5	1	9	98			98
Conventional							
oil and grease	A-5	1		162			162
suspended solids	A-5	1	<1	2			2

(a) Reported together.

Table V-64

DIRECT CHILL CASTING CONTACT COOLING WATER
(ALUMINUM FORMING PLANTS)

Plant	Water Use l/kkg	Water Use gal/ton	Percent Recycle	Wastewater l/kkg	Wastewater gal/ton
1	*	*	100	0	0
2	*	*	100	0	0
3	2,743	658.0	50	0	0
4	*	*	97	0	0
5	*	*	100	0	0
6	*	*	100	0	0
7	*	*	100	0	0
8	*	*	100*	0	0
9	8.339	2.000	100	0	0
10	82,050	19,680	99	0.2989	0.0717
11	105,000	25,190	99	0.3252	0.0780
12	86,430	20,730	100	0.4169	0.1000
13	82,640	19,820	99	0.4169	0.1000
14	908.9	218.0	0	120.9	29.00
15	30,670	7,355	98	150.1	36.00
16	37,530	9,000	97	250.2	60.00
17	31,340	7,516	99	313.4	75.16
18	392.8	94.20	0	392.8	94.20
19	*	*	*	496.2	119.0
20	*	*	*	514.5	123.4
21	73,800	17,700	97	612.9	147.0
22	31,440	7,540	98	629.6	151.0
23	3,819	916.0	0	779.7	187.0
24	14,090	3,380	93	963.1	231.0
25	35,320	8,470	94	1,113	267.0
26	36,980	8,870	97	1,167	280.0
27	177,900	42,670	99	1,483	355.6
28	70,880	17,000	96	1,534	368.0
29	62,960	15,100	96	1,955	469.0
30	72,130	17,300	94	2,397	575.0
31	43,360	10,400	92	2,753	660.4
32	3,394	814.0	0	3,002	720.0
33	*	*	*	4,003	960.0
34	5,041	1,209	0	5,041	1,209
35	*	*	*	5,337	1,280
36	9,089	2,180	0	9,089	2,180
37	9,506	2,280	0	9,506	2,280
38	23,060	5,530	0	16,590	3,980
39	28,390	6,810	0	28,390	6,810
40	35,500	8,514	0	35,500	8,514
41	52,540	12,600	0	52,540	12,600

Table V-64 (Continued)

DIRECT CHILL CASTING CONTACT COOLING WATER
(ALUMINUM FORMING PLANTS)

Plant	Water Use l/kkg	Water Use gal/ton	Percent Recycle	Wastewater l/kkg	Wastewater gal/ton
42	58,370	14,000	0	58,370	14,000
43	91,310	21,900	0	91,310	21,900
44	*	*	98	*	*
45	*	*	96	*	*
46	*	*	*	*	*
47	*	*	*	*	*
48	*	*	0	*	*
49	*	*	0	*	*
50	*	*	*	*	*
51	*	*	0	*	*
52	*	*	*	*	*
53	*	*	0	*	*
54	*	*	*	*	*
55	*	*	*	*	*
56	50,030	12,000	100	*	*
57	*	*	*	*	*
58	*	*	*	*	*
59	*	*	0	*	*
60	*	*	90	*	*
61	*	*	*	*	*

*Data not available.

Table V-65

DIRECT CHILL CASTING CONTACT COOLING WATER

Primary Aluminum Subcategory

Plant	Water Use l/kkg	Water Use gal/ton	Percent Recycle	Wastewater l/kkg	Wastewater gal/ton
1	*	*	99+	123	29.52
2	*	*	99	459	110.2
3	*	*	98	1,801	432.2
4	*	*	98	9,549	2,292
5	*	*	94	3,303	792.7
6	*	*	82	2,610	626.4
7	*	*	48	600	144.0
8	*	*	20	19,473	4,674
9	*	*	0	6,964	1,671
10	*	*	0	12,552	3,012
11	*	*	0	15,638	3,753
12	*	*	0	27,188	6,525
13	*	*	0	32,860	7,886
14	*	*	0	34,903	8,377
15	*	*	0	38,406	9,217
16	*	*	0	45,870	11,009
17	*	*	0	57,129	13,711
18	*	*	0	59,214	14,211
19	*	*	0	79,230	19,015
20	*	*	93	NA	NA
21	*	*	*	NA	NA
22	*	*	*	NA	NA
23	*	*	0	NA	NA
24	*	*	*	NA	NA
25	*	*	*	NA	NA

Secondary Aluminum Subcategory

26	*	*	99	0.3002	0.0720
27	*	*	100	0	0
28	*	*	100	0	0
29	*	*	100	0	0
30	*	*	100	0	0

*Data not available.

Table V-65 (Continued)

DIRECT CHILL CASTING CONTACT COOLING WATER

Statistical Summary†

Minimum	8.339	2.000	0	0
Maximum	177,900	42,670	91,310	21,900
Mean	43,900	10,530	1,329	318.9
Median	35,500	8,514	1,483	355.6
Sample:	33 of 91 plants		67 of 91 plants	

†The statistical summary includes direct chill casting data for aluminum forming, primary aluminum, and secondary aluminum plants with 90 percent recycle or greater.

Table V-66

FREQUENCY OF OCCURRENCE OF TOXIC POLLUTANTS
DIRECT CHILL CASTING CONTACT COOLING WATER
RAW WASTEWATER

	Pollutant	Analytical Quantification Level (mg/l)	Number of Streams Analyzed	Number of Samples Analyzed	Number of Times Observed in Samples (mg/l) ND-0.010	0.011-0.100	0.101-1.000	1.000+
1.	acenaphthene	0.010	12	20	18		2	
2.	acrolein	0.010	12	23	23			
3.	acrylonitrile	0.010	12	23	23			
4.	benzene	0.010	12	23	22	1		
5.	benzidine	0.010	12	20	20			
6.	carbon tetrachloride	0.010	12	23	23			
7.	chlorobenzene	0.010	12	23	23			
8.	1,2,4-trichlorobenzene	0.010	12	20	20			
9.	hexachlorobenzene	0.010	12	20	20			
10.	1,2-dichloroethane	0.010	12	23	23			
11.	1,1,1-trichloroethane	0.010	12	23	23			
12.	hexachloroethane	0.010	12	20	20			
13.	1,1-dichloroethane	0.010	12	23	23			
14.	1,1,2-trichloroethane	0.010	12	23	23			
15.	1,1,2,2-tetrachloroethane	0.010	12	23	23			
16.	chloroethane	0.010	12	23	23			
17.	bis(chloromethyl)ether	0.010	12	23	23			
18.	bis(chloroethyl)ether	0.010	12	20	20			
19.	2-chloroethyl vinyl ether	0.010	12	23	23			
20.	2-chloronaphthalene	0.010	12	20	20			
21.	2,4,6-trichlorophenol	0.010	12	20	20			
22.	p-chloro-m-cresol	0.010	12	20	20			
23.	chloroform	0.010	12	23	12	10	1	
24.	2-chlorophenol	0.010	12	20	19	1		
25.	1,2-dichlorobenzene	0.010	12	20	20			
26.	1,3-dichlorobenzene	0.010	12	20	20			
27.	1,4-dichlorobenzene	0.010	12	20	20			
28.	3,3'-dichlorobenzidine	0.010	12	20	20			
29.	1,1-dichloroethylene	0.010	12	23	23			
30.	1,2-trans-dichloroethylene	0.010	12	23	23			
31.	2,4-dichlorophenol	0.010	12	20	20			
32.	1,2-dichloropropane	0.010	12	23	23			
33.	1,3-dichloropropene	0.010	12	23	23			
34.	2,4-dimethylphenol	0.010	12	20	20			
35.	2,4-dinitrotoluene	0.010	12	20	20			
36.	2,6-dinitrotoluene	0.010	12	20	20			
37.	1,2-diphenylhydrazine	0.010	12	20	20			
38.	ethylbenzene	0.010	12	23	23			
39.	fluoranthene	0.010	12	20	20			

Table V-66 (Continued)

FREQUENCY OF OCCURRENCE OF TOXIC POLLUTANTS
DIRECT CHILL CASTING CONTACT COOLING WATER
RAW WASTEWATER

	Pollutant	Analytical Quantification Level (mg/l)	Number of Streams Analyzed	Number of Samples Analyzed	Number of Times Observed in Samples (mg/l)			
					ND-0.010	0.011-0.100	0.101-1.000	1.000+
40.	4-chlorophenyl phenyl ether	0.010	12	20	20			
41.	4-bromophenyl phenyl ether	0.010	12	20	20			
42.	bis(2-chloroisopropyl)ether	0.010	12	20	20			
43.	bis(2-chloroethoxy)methane	0.010	12	20	20			
44.	methylene chloride	0.010	12	23	10	5	8	
45.	methyl chloride (chloromethane)	0.010	12	23	23			
46.	methyl bromide (bromomethane)	0.010	12	23	23			
47.	bromoform (tribromomethane)	0.010	12	23	23			
48.	dichlorobromomethane	0.010	12	23	23			
49.	trichlorofluoromethane	0.010	12	23	23			
50.	dichlorodifluoromethane	0.010	12	23	23			
51.	chlorodibromomethane	0.010	12	23	23			
52.	hexachlorobutadiene	0.010	12	20	20			
53.	hexachlorocyclopentadiene	0.010	12	20	20			
54.	isophorone	0.010	12	20	18	2		
55.	naphthalene	0.010	12	20	20			
56.	nitrobenzene	0.010	12	20	20			
57.	2-nitrophenol	0.010	12	20	20			
58.	4-nitrophenol	0.010	12	20	20			
59.	2,4-dinitrophenol	0.010	12	20	19	1		
60.	4,6-dinitro-o-cresol	0.010	12	20	19	1		
61.	N-nitrosodimethylamine	0.010	12	20	20			
62.	N-nitrosodiphenylamine	0.010	12	20	18	2		
63.	N-nitrosodi-n-propylamine	0.010	12	20	20			
64.	pentachlorophenol	0.010	12	20	20			
65.	phenol	0.010	12	20	17	2	1	
66.	bis (2-ethylhexyl) phthalate	0.010	12	20	11	5	4	
67.	butyl benzyl phthalate	0.010	12	20	15	1	4	
68.	di-n-butyl phthalate	0.010	12	20	12	8		
69.	di-n-octyl phthalate	0.010	12	20	18	1	1	
70.	diethyl phthalate	0.010	12	20	17	2	1	
71.	dimethyl phthalate	0.010	12	20	19	1		
72.	benzo(a)anthracene	0.010	12	20	20			
73.	benzo(a)pyrene	0.010	12	20	20			
74.	benzo(b)fluoranthene	0.010	12	20	20			
75.	benzo(k)fluoranthene	0.010	12	20	20			
76.	chrysene	0.010	12	20	20			
77.	acenaphthylene	0.010	12	20	19	1		
78.	anthracene (a)	0.010	12	20	18		2	

Table V-66 (Continued)

FREQUENCY OF OCCURRENCE OF TOXIC POLLUTANTS
DIRECT CHILL CASTING CONTACT COOLING WATER
RAW WASTEWATER

	Pollutant	Analytical Quantification Level (mg/l)	Number of Streams Analyzed	Number of Samples Analyzed	Number of Times Observed in Samples (mg/l) ND-0.010	0.011-0.100	0.101-1.000	1.000+
79.	benzo(ghi)perylene	0.010	12	20	20			
80.	fluorene	0.010	12	20	18	2		
81.	phenanthrene (a)	0.010	-	-				
82.	dibenzo(a,h)anthracene	0.010	12	20	20			
83.	indeno (1,2,3-c,d)pyrene	0.010	12	20	20			
84.	pyrene	0.010	12	20	20			
85.	tetrachloroethylene	0.010	12	23	23			
86.	toluene	0.010	12	23	23			
87.	trichloroethylene	0.010	12	23	23			
88.	vinyl chloride (chloroethylene)	0.010	12	23	23			
89.	aldrin	0.005	12	16	16			
90.	dieldrin	0.005	12	16	16			
91.	chlordane	0.005	12	16	16			
92.	4,4'-DDT	0.005	12	16	16			
93.	4,4'-DDE	0.005	12	16	16			
94.	4,4'-DDD	0.005	12	16	16			
95.	alpha-endosulfan	0.005	12	16	16			
96.	beta-endosulfan	0.005	12	16	16			
97.	endosulfan sulfate	0.005	12	16	16			
98.	endrin	0.005	12	16	16			
99.	endrin aldehyde	0.005	12	16	16			
100.	heptachlor	0.005	12	16	16			
101.	heptachlor epoxide	0.005	12	16	16			
102.	alpha-BHC	0.005	12	16	16			
103.	beta-BHC	0.005	12	16	16			
104.	gamma-BHC	0.005	12	16	16			
105.	delta-BHC	0.005	12	16	16			
106.	PCB-1242 (b)	0.005	12	16	14	2		
107.	PCB-1254 (b)	0.005	-	-				
108.	PCB-1221 (b)	0.005	-	-				
109.	PCB-1232 (b)	0.005	-	-				
110.	PCB-1248 (c)	0.005	12	16	14	2		
111.	PCB-1260 (c)	0.005	-	-				
112.	PCB-1016 (c)	0.005	-	-				
113.	toxaphene	0.005	12	16	16			
114.	antimony	0.100	7	11	11			
115.	arsenic	0.010	12	20	20			
116.	asbestos	10 MFL	0	0				

Table V-66 (Continued)

FREQUENCY OF OCCURRENCE OF TOXIC POLLUTANTS
DIRECT CHILL CASTING CONTACT COOLING WATER
RAW WASTEWATER

Pollutant	Analytical Quantification Level (mg/l)	Number of Streams Analyzed	Number of Samples Analyzed	Number of Times Observed in Samples (mg/l)			
				ND-0.010	0.011-0.100	0.101-1.000	1.000+
117. beryllium	0.010	12	20	20			
118. cadmium	0.002	12	20	19	1		
119. chromium (total)	0.005	12	20	18	1		1
120. copper	0.009	12	20	9	11		
121. cyanide (total)	0.010	12	20	20			
122. lead	0.020	12	20	10	10		
123. mercury	0.0001	12	20	19	1		
124. nickel	0.005	12	20	19	1		
125. selenium	0.01	7	11	11			
126. silver	0.02	7	11	11			
127. thallium	0.100	7	11	11			
128. zinc	0.050	12	20	6	5	9	
129. 2,3,7,8-tetrachlorodibenzo-p-dioxin	0.005	0	0				

(a), (b), (c) Reported together.

Table V-67

SAMPLING DATA
DIRECT CHILL CASTING CONTACT COOLING WATER
RAW WASTEWATER

Pollutant	Stream Code	Sample Type	Source	Concentrations (mg/l) Day 1	Day 2	Day 3	Average
Toxic Pollutants							
1. acenaphthene	D-7	2	ND	ND			
	E-2	2	*	0.440			0.440
	E-3	3	*	0.280	ND	ND	0.280
	F-2	1	ND	ND			
	F-3	6	ND	ND			
	H-1	2	*	ND			
	H-2	3	*	ND	ND	ND	
	L-1	7	ND	ND			
	N-3	6	ND	ND			
	P-2	3	ND	ND	ND	ND	
	R-2	1	ND	ND			
	U-2	3	ND	ND	ND	ND	
4. benzene	D-7	1	ND	*			*
	E-2	1	ND	ND	*	*	*
	E-3	1	ND	ND			
	F-2	1	ND	0.013			0.013
	F-3	1	ND	ND	ND	*	*
	H-1	1	0.023	*			*
	H-2	1	0.023	*	*	*	*
	L-1	1	ND	*			
	N-3	1	ND	ND	*	ND	*
	P-2	1	ND	ND	ND	ND	
	R-2	1	ND	ND			
	U-2	1	*	*	ND		*
23. chloroform	D-7	1	0.020	*			*
	E-2	1	*	0.065			0.065
	E-3	1	*	0.066	0.072	0.150	0.096
	F-2	1	2.012	0.036			0.036
	F-3	1	0.012	0.012	0.019	0.015	0.015
	H-1	1	0.066	0.014			0.014
	H-2	1	0.066	0.027	0.012	*	0.013
	L-1	1	0.100	*			*
	N-3	1	0.040	*	ND	*	*
	P-2	1	ND	ND	ND	*	*
	R-2	1	0.040	*			*
	U-2	1	*	ND	ND		

Table V-67 (Continued)

SAMPLING DATA
DIRECT CHILL CASTING CONTACT COOLING WATER
RAW WASTEWATER

Pollutant	Stream Code	Sample Type	Source	Concentrations (mg/l) Day 1	Day 2	Day 3	Average
24. 2-chlorophenol	D-7	2	ND	ND			
	E-2	2	ND	ND			
	E-3	3	ND	ND	ND	ND	
	F-2	1	ND	0.012			0.012
	F-3	6	ND	ND			
	H-1	2	ND	ND			
	H-2	3	ND	ND	ND	ND	
	L-1	7	ND	ND			
	N-3	6	ND	ND			
	P-2	3	ND	ND	ND	ND	
	R-2	1	ND	ND			
	U-2	3	ND	ND	ND	ND	
44. methylene chloride	D-7	1	*	0.230			0.230
	E-2	1	0.017	*			*
	E-3	1	0.170	0.013	0.058	0.393	0.155
	F-2	1	0.024	0.185			0.185
	F-3	1	0.024	0.040	0.084	0.160	0.095
	H-1	1	1.100	0.150			0.150
	H-2	1	1.100	0.110	0.140	0.034	0.095
	L-1	1	ND	*			*
	N-3	1	ND	*	*	*	*
	P-2	1	*	*	*	*	
	R-2	1	*	*			*
	U-2	1	*	0.470	*		0.235
54. isophorone	D-7	2	ND	ND			
	E-2	2	ND	ND			
	E-3	3	ND	ND	0.035	0.023	0.029
	F-2	1	ND	ND			
	F-3	6	ND	ND			
	H-1	2	0.011	ND			
	H-2	3	0.011	ND	ND	ND	
	I-1	7	ND	ND			
	N-3	6	ND	ND			
	P-2	3	ND	ND	ND	ND	
	R-2	1	ND	ND			
	U-2	3	ND	ND	ND	ND	

Table V-67 (Continued)

SAMPLING DATA
DIRECT CHILL CASTING CONTACT COOLING WATER
RAW WASTEWATER

Pollutant	Stream Code	Sample Type	Source	Concentrations (mg/l) Day 1	Day 2	Day 3	Average
59. 2,4-dinitrophenol	D-7	2	ND	ND			
	E-2	2	ND	ND			
	E-3	3	ND	0.042	ND	ND	0.042
	F-2	1	ND	ND			
	F-3	6	ND	ND			
	H-1	2	ND	ND			
	H-2	3	ND	ND	ND	ND	
	L-1	7	ND	ND			
	N-3	6	ND	ND			
	P-2	3	ND	ND	ND	ND	
	R-2	1	ND	ND			
	U-2	3	ND	ND	ND	ND	
60. 4,6-dinitro-o-cresol	D-7	2	ND	ND			
	E-2	2	ND	ND			
	E-3	3	ND	0.053	ND	ND	0.053
	F-2	1	ND	ND			
	F-3	6	ND	ND			
	H-1	2	ND	ND			
	H-2	3	ND	ND	ND	ND	
	L-1	7	ND	ND			
	N-3	6	ND	ND			
	P-2	3	ND	ND	ND	ND	
	R-2	1	ND	ND			
	U-2	3	ND	ND	ND	ND	
62. N-nitrosodiphenylamine	D-7	2	ND	ND			
	E-2	2	ND	ND			
	E-3	3	ND	ND	0.044	0.057	0.051
	F-2	1	ND	ND			
	F-3	6	ND	ND			
	H-1	2	ND	ND			
	H-2	3	ND	ND	ND	ND	
	L-1	7	ND	ND			
	N-3	6	ND	ND			
	P-2	3	ND	ND	ND	ND	
	R-2	1	ND	ND			
	U-2	3	ND	ND	ND	ND	

Table V-67 (Continued)

SAMPLING DATA
DIRECT CHILL CASTING CONTACT COOLING WATER
RAW WASTEWATER

Pollutant	Stream Code	Sample Type	Source	Concentrations (mg/l) Day 1	Day 2	Day 3	Average
65. phenol	D-7	2	ND	ND			
	E-2	2	*	0.056			0.056
	E-3	3	*	ND	ND	ND	
	F-2	1	ND	ND			
	F-3	6	ND	ND			
	H-1	2	ND	ND			
	H-2	3	ND	*	ND	ND	*
	L-1	7	ND	ND			
	N-3	6	ND	0.050			0.050
	P-2	3	ND	*	*	*	*
	R-2	1	ND	0.500			0.500
	U-2	3	ND	ND	ND	ND	
66. bis(2-ethylhexyl) phthalate	D-7	2	*	0.046			0.046
	E-2	2	*	0.064			0.064
	E-3	3	*	0.140	ND	ND	0.140
	F-2	1	0.025	0.023			0.023
	F-3	6	0.025	*			*
	H-1	2	0.065	0.280			0.280
	H-2	3	0.065	0.066	0.200	0.180	0.149
	L-1	7	ND	ND			
	N-3	6	ND	ND			
	P-2	3	*	ND	*	*	*
	R-2	1	*	ND			
	U-2	3	*	0.020	*	*	*
67. butyl benzyl phthalate	D-7	2	ND	0.037			0.037
	E-2	2	*	ND			
	E-3	3	*	ND	*	ND	*
	F-2	1	*	ND			
	F-3	6	*	ND			
	H-1	2	ND	0.230			0.230
	H-2	3	ND	0.130	0.340	0.600	0.360
	L-1	7	ND	ND			
	N-3	6	ND	ND			
	P-2	3	ND	ND	ND	ND	
	R-2	1	ND	ND			
	U-2	3	ND	ND	ND	ND	

Table V-67 (Continued)

SAMPLING DATA
DIRECT CHILL CASTING CONTACT COOLING WATER
RAW WASTEWATER

Pollutant	Stream Code	Sample Type	Source	Concentrations (mg/l) Day 1	Day 2	Day 3	Average
68. di-n-butyl phthalate	D-7	2	*	ND			
	E-2	2	*	0.043			0.043
	E-3	3	*	0.055	0.013	*	0.023
	F-2	1	*	0.011			0.011
	F-3	6	*	ND			
	H-1	2	*	0.029			0.029
	H-2	3	*	0.015	0.022	0.022	0.020
	L-1	7	ND	ND			
	N-3	6	ND	ND			
	P-2	3	ND	*	ND	ND	*
	R-2	1	*	ND			
	U-2	3	ND	ND	*	*	*
69. di-n-octyl phthalate	D-7	2	ND	ND			
	E-2	2	ND	ND			
	E-3	3	ND	ND	ND	ND	
	F-2	1	ND	ND			
	F-3	6	ND	ND			
	H-1	2	ND	0.094			0.094
	H-2	3	ND	ND	0.120	ND	0.120
	L-1	7	ND	ND			
	N-3	6	ND	ND			
	P-2	3	ND	ND	ND	ND	
	R-2	1	ND	ND			
	U-2	3	ND	*	ND	ND	*
70. diethyl phthalate	D-7	2	ND	ND			
	E-2	2	*	0.073			0.073
	E-3	3	*	0.110	ND	ND	0.110
	F-2	1	ND	*			*
	F-3	6	ND	0.012			0.012
	H-1	2	*	ND			
	H-2	3	*	*	ND	ND	*
	L-1	7	ND	ND			
	N-3	6	ND	ND			
	P-2	3	ND	ND	ND	ND	
	R-2	1	ND	ND			
	U-2	3	*	*	*	*	*

Table V-67 (Continued)

SAMPLING DATA
DIRECT CHILL CASTING CONTACT COOLING WATER
RAW WASTEWATER

Pollutant	Stream Code	Sample Type	Source	Concentrations (mg/l) Day 1	Day 2	Day 3	Average
71. dimethyl phthalate	D-7	2	ND	ND			
	E-2	2	*	ND			
	E-3	3	*	0.053	ND	ND	0.053
	F-2	1	ND	*			*
	F-3	6	ND	ND			
	H-1	2	*	ND			
	H-2	3	*	ND	ND	ND	
	L-1	7	ND	ND			
	N-3	6	ND	*			*
	P-2	3	ND	*	ND	ND	*
	R-2	1	ND	ND			
	U-2	3	ND	ND	*	*	*
77. acenaphthylene	D-7	2	ND	ND			
	E-2	2	*	ND			
	E-3	3	*	ND	0.012	*	*
	F-2	1	*	ND			
	F-3	6	*	ND			
	H-1	2	*	ND			
	H-2	3	*	ND	ND	ND	
	L-1	7	ND	ND			
	N-3	6	ND	ND			
	P-2	3	ND	ND	ND	ND	
	R-2	1	ND	ND			
	U-2	3	ND	ND	ND	ND	
78. anthracene (a)	D-7	2	ND	ND			
81. phenanthrene (a)	E-2	2	ND	ND			
	E-3	3	ND	ND	0.130	0.148	0.139
	F-2	1	ND	ND			
	F-3	6	ND	ND			
	H-1	2	ND	ND			
	H-2	3	ND	ND	ND	ND	
	L-1	7	ND	ND			
	N-3	6	ND	*			*
	P-2	3	ND	ND	ND	ND	
	R-2	1	ND	ND			
	U-2	3	ND	*	ND	ND	*

Table V-67 (Continued)

SAMPLING DATA
DIRECT CHILL CASTING CONTACT COOLING WATER
RAW WASTEWATER

Pollutant	Stream Code	Sample Type	Source	Concentrations (mg/l) Day 1	Day 2	Day 3	Average
80. fluorene	D-7	2	ND	ND			
	E-2	2	*	ND			
	E-3	3	*	ND	0.024	0.023	0.024
	F-2	1	ND	ND			
	F-3	6	ND	ND			
	H-1	2	*	ND			
	H-2	3	*	ND	ND	ND	
	L-1	7	ND	ND			
	N-3	6	ND	ND			
	P-2	3	ND	ND	ND	ND	
	R-2	1	ND	ND			
	U-2	3	ND	ND	ND	ND	
91. chlordane	D-7	2	**	**			**
	E-2	2	**	0.0075			0.0075
	E-3	3	**	0.0056			0.0056
	F-2	1	**	**			**
	F-3	6	**	**			**
	H-1	2	**	ND			
	H-2	3	**	**			**
	L-1	7	ND	ND			
	N-3	6	ND	ND			
	P-2	3	ND	ND	ND	ND	
	R-2	1	ND	ND			
	U-2	3	ND	ND	ND	ND	
106. PCB-1242 (b)	D-7	2	**	**			**
107. PCB-1254 (b)	E-2	2	**	0.032			0.032
108. PCB-1221 (b)	E-3	3	88.000	0.025			0.025
	F-2	1	**	ND			
	F-3	6	**	**			**
	H-1	2	0.015	ND			
	H-2	3	0.015	ND			
	L-1	7	ND	ND			
	N-3	6	ND	ND			
	P-2	3	ND	ND	ND	ND	
	R-2	1	ND	ND			
	U-2	3	ND	ND	ND	ND	

Table V-67 (Continued)

SAMPLING DATA
DIRECT CHILL CASTING CONTACT COOLING WATER
RAW WASTEWATER

Pollutant	Stream Code	Sample Type	Source	Concentrations (mg/l) Day 1	Day 2	Day 3	Average
109. PCB-1232 (c)	D-7	2	**	**			**
110. PCB-1248 (c)	E-2	2	**	0.032			0.032
111. PCB-1260 (c)	E-3	3	**	0.027			0.027
112. PCB-1016 (c)	F-2	1	**	ND			
	F-3	6	**	**			**
	H-1	2	**	**			**
	H-2	3	**	ND			
	L-1	7	ND	ND			
	N-3	6	ND	ND			
	P-2	3	ND	ND	ND	ND	
	R-2	1	ND	ND			
	U-2	3	ND	ND	ND	ND	
118. cadmium	D-7	2	<0.002	<0.002			<0.002
	E-2	2	<0.002	<0.002			<0.002
	E-3	3	<0.002	<0.002	<0.002	<0.002	<0.002
	F-2	1	<0.002	<0.002			<0.002
	F-3	6	<0.002	<0.002			<0.002
	H-1	2	<0.002	<0.002			<0.002
	H-2	3	<0.002	<0.002	<0.002	<0.002	<0.002
	L-1	7	<0.0005	0.0011			0.0011
	N-3	6	<0.0005	0.0008			0.0008
	P-2	3	0.0011	<0.0005	0.0026	<0.0005	<0.0012
	R-2	1	<0.0005	0.020			0.020
	U-2	3	0.002	0.002	0.002	<0.001	<0.002
119. chromium	D-7	2	<0.005	0.007			0.007
	E-2	2	<0.005	<0.005			<0.005
	E-3	3	<0.005	<0.005	<0.005	<0.005	<0.005
	F-2	1	<0.005	<0.005			<0.005
	F-3	6	<0.005	<0.005			<0.005
	H-1	2	<0.005	<0.005			<0.005
	H-2	3	<0.005	<0.005	<0.005	<0.005	<0.005
	L-1	7	<0.001	<0.001			<0.001
	N-3	6	<0.001	<0.001			<0.001
	P-2	3	<0.001	0.002	0.053	0.004	0.020
	R-2	1	<0.0001	1.600			1.600
	U-2	3	<0.001	0.002	<0.001	<0.001	<0.001

Table V-67 (Continued)

SAMPLING DATA
DIRECT CHILL CASTING CONTACT COOLING WATER
RAW WASTEWATER

Pollutant	Stream Code	Sample Type	Source	Concentrations (mg/l) Day 1	Day 2	Day 3	Average
120. copper	D-7	2	<0.009	0.010			0.010
	E-2	2	<0.009	0.010			0.010
	E-3	3	<0.009	<0.009	0.010	0.010	<0.010
	F-2	1	<0.009	<0.009			<0.009
	F-3	6	<0.009	<0.009			<0.009
	H-1	2	0.010	0.020			0.020
	H-2	3	0.010	0.020	0.020	0.020	0.020
	L-1	7	0.010	0.004			0.004
	N-3	6	0.008	0.007			0.007
	P-2	3	0.004	0.030	0.020	0.019	0.023
	R-2	1	0.001	0.015			0.015
	U-2	3	0.013	0.012	0.016	0.011	0.013
122. lead	D-7	2	<0.020	0.020			0.020
	E-2	2	<0.020	0.020			0.020
	E-3	3	<0.020	<0.020	<0.020	<0.020	<0.020
	F-2	1	<0.020	<0.020			<0.020
	F-3	6	<0.020	<0.020			<0.020
	H-1	2	<0.020	0.100			0.100
	H-2	3	<0.020	0.090	0.090	0.090	0.090
	L-1	7	0.014	0.021			0.021
	N-3	6	0.010	0.014			0.014
	P-2	3	0.002	0.002	0.006	0.004	0.004
	R-2	1	<0.001	0.006			0.006
	U-2	3	0.010	0.012	0.007	0.011	0.010
123. mercury	D-7	2	0.0006	0.0005			0.0005
	E-2	2	0.0004	0.0005			0.0005
	E-3	3	0.0004	0.0004	0.0008	0.0004	0.0005
	F-2	1	0.0006	0.020			0.020
	F-3	6	0.0006	<0.0001			<0.0001
	H-1	2	0.0004	0.0002			0.0002
	H-2	3	0.0004	<0.0001	0.0002	0.005	<0.002
	L-1	7	0.0073	0.0076			0.0076
	N-3	6	0.0091	0.003			0.003
	P-2	3	<0.0001	<0.0001	<0.0004	<0.0001	<0.0002
	R-2	1	<0.0007	<0.001			<0.001
	U-2	3	0.005	0.002	0.002	0.002	0.002

Table V-67 (Continued)

SAMPLING DATA
DIRECT CHILL CASTING CONTACT COOLING WATER
RAW WASTEWATER

Pollutant	Stream Code	Sample Type	Source	Concentrations (mg/l) Day 1	Day 2	Day 3	Average
124. nickel	D-7	2	<0.005	<0.005			<0.005
	E-2	2	<0.005	<0.005			<0.005
	E-3	3	<0.005	<0.005	<0.005	<0.005	<0.005
	F-2	1	<0.005	<0.005			<0.005
	F-3	6	<0.005	<0.005			<0.005
	H-1	2	<0.005	<0.005			<0.005
	H-2	3	<0.005	<0.005	<0.005	<0.005	<0.005
	L-1	7	<0.001	<0.001			<0.001
	N-3	6	<0.001	<0.001			<0.001
	P-2	3	<0.001	<0.001	<0.001	<0.001	<0.001
	R-2	1	<0.001	<0.001			<0.001
	U-2	3	0.016	0.020	0.003	<0.003	<0.009
128. zinc	D-7	2	<0.050	0.100			0.100
	E-2	2	<0.050	0.100			0.100
	E-3	3	<0.050	0.100	0.100	0.100	0.100
	F-2	1	<0.050	<0.050			<0.050
	F-3	6	<0.050	<0.050			<0.050
	H-1	2	0.100	0.200			0.200
	H-2	3	0.100	0.300	0.300	0.200	0.270
	L-1	7	0.053	<0.010			<0.010
	N-3	6	<0.010	0.370			0.370
	P-2	3	<0.010	<0.010	<0.010	<0.010	<0.010
	R-2	1	0.053	1.0			1.0
	U-2	3	ND	0.220	0.240	0.140	0.200
Nonconventional							
alkalinity	D-7	2		140			140
	E-2	2		90			90
	E-3	1		90	84	76	83
	F-2	1		140			140
	F-3	6		130	130	150	137
	H-1	2	107	97			97
	H-2	1		100	134	150	128
	L-1	6		41			41
	N-3	6		70			70
	P-2	2		28	22	22	24
	R-2	1		160			160
	U-2	1		64	69	82	72

Table V-67 (Continued)

SAMPLING DATA
DIRECT CHILL CASTING CONTACT COOLING WATER
RAW WASTEWATER

Pollutant	Stream Code	Sample Type	Source	Concentrations (mg/l) Day 1	Day 2	Day 3	Average
Nonconventional							
aluminum	D-7	2	0.200	0.7			0.7
	E-2	2	<0.09	<0.295			<0.295
	E-3	3	<0.09	<0.295	<0.245	<0.195	<0.245
	F-2	1	<0.09	0.200			0.200
	F-3	6	<0.09	0.2	2	2	1
	H-1	2	<0.09	0.9			0.9
	H-2	3	<0.09	0.700	0.800	0.700	0.733
	L-1	7	<0.5	<0.5			<0.5
	N-3	6	<0.5	<0.050			<0.050
	P-2	3	<0.5	0.88	0.97	0.97	0.94
	R-2	1	<0.500				
	U-2	3		<0.100	<0.100	<0.100	<0.100
calcium	D-7	2	38	55			55
	E-2	2	68	77			77
	E-3	1	68	73	72	77	74
	F-2	1	<5	2.8			2.8
	F-3	6	<5	2.8	0.63	0.42	1.3
	H-1	2	52	56			56
	H-2	1	52	56	69	78	68
	L-1	6	9	13			13
	N-3	6	28	30			30
	P-2	2	0.300	101	106	107	105
	R-2	1	60	80			80
	U-2	1		13.2	86.9	150	83
chemical oxygen demand (COD)	D-7	2		62			62
	E-2	2	<5	281			281
	E-3	3	<5	236	350	373	320
	F-2	1		<5			<5
	F-3	6		12			12
	H-1	1		419			419
	H-2	3		374	312	343	343
	L-1	7	<5	24			24
	N-3	6	5	82			82
	P-2	3	<5	24	32	39	32
	R-2	1		396			396
	U-2	3		14	25	33	24

Table V-67 (Continued)

SAMPLING DATA
DIRECT CHILL CASTING CONTACT COOLING WATER
RAW WASTEWATER

Pollutant	Stream Code	Sample Type	Source	Concentrations (mg/l) Day 1	Day 2	Day 3	Average
dissolved solids	D-7	2		236			236
	E-2	2		327			327
	E-3	1		336	385	372	364
	F-2	1		255			255
	F-3	6		224	220		222
	H-1	2	173	237			237
	H-2	1	173	246	273	272	264
	L-1	6		150			150
	N-3	6		230			230
	P-2	2		810	860	810	827
	R-2	1		790			790
	U-2	1		830	820	810	820
magnesium	D-7	2	12	14			14
	E-2	2	3.8	3.7			3.7
	E-3	1	3.8	3.6	3.6	3.6	3.6
	F-2	1	<0.1	0.12			0.12
	F-3	6	<0.1	0.200	0.210	0.160	0.190
	H-1	2	3.6	4.2			4.2
	H-2	1	3.6	4.5	5.6	5.8	5.3
	L-1	6	2.24	3.07			3.07
	N-3	6	4.39	7.97			7.97
	P-2	2	0.08	40	41	39	40
	R-2	1	22.1	2.61			2.61
	U-2	1		16.9	14.9	16.9	16.2
phenols (total; by 4-AAP method)	D-7	2		0.01			0.01
	E-2	2		0.003			0.003
	E-3	1		0.004	0.005	0.014	0.008
	F-2	1		<0.001			<0.001
	F-3	6		0.002			0.002
	H-1	2		0.014			0.014
	H-2	1		0.032	0.016	0.011	0.020
	L-1	6		0.004			0.004
	N-3	6		0.077			0.077
	P-2	2		0.006	0.012		0.009
	R-2	1		0.117			0.117
	U-2	1		0.018	0.027		0.022

Table V-67 (Continued)

SAMPLING DATA
DIRECT CHILL CASTING CONTACT COOLING WATER
RAW WASTEWATER

Pollutant	Stream Code	Sample Type	Source	Concentrations (mg/l) Day 1	Day 2	Day 3	Average
sulfate	D-7	2		50			50
	E-2	2		90			90
	E-3	1		130	110	90	110
	F-2	1		10			10
	F-3	6		10	10	10	10
	H-1	2	<10	31			31
	H-2	1	<10	42	18	20	27
	L-1	6		9			9
	N-3	6		40			40
	P-2	2		24	21	23	23
	R-2	1		230			230
	U-2	1		370	340	350	353
total organic carbon (TOC)	D-7	2		25			25
	E-2	2	1	150			150
	E-3	3	1	136	119	153	136
	F-2	1		1			1
	F-3	6		5			5
	H-1	1		93			93
	H-2	3		38	76	74	63
	L-1	7	2.8	5.9			5.9
	N-3	6	2.7	19			19
	P-2	3	2	5.6	4	4	5
	R-2	1		13			13
	U-2	3		2.8	3.3	5.1	3.7
Conventional							
oil and grease	D-7	1		27			27
	E-2	1		137			137
	E-3	1		226	236	181	214
	F-2	1		5			5
	F-3	1		7	10	15	11
	H-1	1		50			50
	H-2	1		65	155	140	120
	L-1	1		19			19
	N-3	6	<5	103	32		68
	P-2	1		15	7	8	10
	R-2	1		198			198
	U-2	1		<5	8	59	<24

Table V-67 (Continued)

SAMPLING DATA
DIRECT CHILL CASTING CONTACT COOLING WATER
RAW WASTEWATER

Pollutant	Stream Code	Sample Type	Source	Concentrations (mg/l) Day 1	Day 2	Day 3	Average
suspended solids	D-7	2		37			37
	E-2	2	<1	44			44
	E-3	3	<1	26	45	40	37
	F-2	1		<1			<1
	F-3	6		6			6
	H-1	1		164			164
	H-2	3		113	135	149	132
	L-1	6	<2	7			7
	N-3	6	<2	3			3
	P-2	3	5	14	14	19	16
	R-2	1		220			220
	U-2	3		4	5	7	5
pH (standard units)	D-7	1		7.9	7.5		
	E-2	1		7			
	E-3	1		6.8	7.9	7.0	
	F-2	1	7.55	7.6			
	F-3	1	7.55	7.5	7.45	7.55	
	H-1	1		7.2			
	H-2	1		7.8			
	L-1	1		7.4	7.4		
	N-3	1	7.1	7.1	7.9	6.9	
	P-2	1		7.8	8.4	8.1	
	R-2	1		7.9			
	U-2	1	8	6			

(a), (b), (c) Reported together.

Note: Stream N-3 treated by oil separation.

Table V-68

CONTINUOUS ROD CASTING CONTACT COOLING WATER
(ALUMINUM FORMING PLANTS)

Plant	Water Use l/kkg	Water Use gal/ton	Percent Recycle	Wastewater l/kkg	Wastewater gal/ton
1	0	0	Dry	0	0
2	1,555	375	0	1,555	375
3	*	*	P	*	*

*Sufficient data not available to calculate these values.

P Total recycle with periodic discharge.

Statistical Summary

Minimum	0	0	0	0
Maximum	1,555	375	1,555	375
Mean	777.5	187.5	777.5	187.5
Median	777.5	187.5	777.5	187.5
Sample:	2 of 3 plants		2 of 3 plants	
Nonzero Mean	1,555	375	1,555	375
Sample:	1 of 3 plants		1 of 3 plants	

Table V-69

CONTINUOUS ROD CASTING CONTACT COOLING WATER
(PRIMARY ALUMINUM PLANTS)

Plant Code	Percent Recycle	Production Normalized Discharge Flow
1	*	*
2	99	415
3	99+	11.3

*Data unknown.

Table V-70

CONTINUOUS ROD CASTING SPENT LUBRICANT

Plant	Water Use l/kkg	Water Use gal/ton	Percent Recycle	Wastewater l/kkg	Wastewater gal/ton
1	*	*	100	0	0
2	*	*	100 (P)	*	*
3	*	*	*	*	*

*Sufficient data not available to calculate these values.
P Periodic discharge.

Table V-71

CONTINUOUS SHEET CASTING SPENT LUBRICANT

Plant	Water Use l/kkg	Water Use gal/ton	Percent Recycle	Wastewater l/kkg	Wastewater gal/ton
1	*	*	100	0	0
2	5.087	1.220	* (P)	1.017	0.2440
3	*	*	* (P)	2.668	0.6400
4	*	*	* (P)	*	*
5	*	*	* (P)	*	*

*Sufficient data not available to calculate these values.
P Periodic discharge.

Statistical Summary

Minimum	0	0
Maximum	2.668	0.6400
Mean	1.229	0.2947
Median	1.017	0.2440
Sample:	3 of 5 plants	
Nonzero Mean	1.964	New
Sample:	2 of 5 plants	

Note: An additional seven continuous sheet casting plants did not mention the use of a lubricant, but one is probably used. Also, three additional plants did not provide sufficient data to characterize water use or discharge.

Table V-72

DEGASSING SCRUBBER LIQUOR (PRIMARY ALUMINUM PLANTS)

Plant	Water Use l/kkg	Water Use gal/ton	Percent Recycle	Wastewater l/kkg	Wastewater gal/ton
1	2,842	682	0	2,842	682
2	3,125	750	0	3,125	750
3	1,854	445	0	1,854	445
4 (a)	*	*	*	*	*

*Data not available or not applicable.

Statistical Summary

Minimum	1,854	445	1,854	445
Maximum	3,125	750	3,125	750
Mean	2,607	626	2,607	626
Median	2,842	682	2,842	682
Sample:	3 of 4 plants		3 of 4 plants	

(a) Data is reported with potline and potroom scrubbing and can not be separated.

Table V-73

FREQUENCY OF OCCURRENCE OF TOXIC POLLUTANTS
DEGASSING SCRUBBER LIQUOR
RAW WASTEWATER

	Pollutant	Analytical Quantification Level (mg/l)	Number of Streams Analyzed	Number of Samples Analyzed	Number of Times Observed in Samples (mg/l) ND-0.010	0.011-0.100	0.101-1.000	1.000+
1.	acenaphthene	0.010	1	3	3			
2.	acrolein	0.010	1	3	3			
3.	acrylonitrile	0.010	1	3	3			
4.	benzene	0.010	1	3	3			
5.	benzidine	0.010	1	3	3			
6.	carbon tetrachloride	0.010	1	3	3			
7.	chlorobenzene	0.010	1	3	3			
8.	1,2,4-trichlorobenzene	0.010	1	3	3			
9.	hexachlorobenzene	0.010	1	3	3			
10.	1,2-dichloroethane	0.010	1	3	3			
11.	1,1,1-trichloroethane	0.010	1	3	3			
12.	hexachloroethane	0.010	1	3	3			
13.	1,1-dichloroethane	0.010	1	3	3			
14.	1,1,2-trichloroethane	0.010	1	3	3			
15.	1,1,2,2-tetrachloroethane	0.010	1	3	3			
16.	chloroethane	0.010	1	3	3			
17.	bis(chloromethyl)ether	0.010	1	3	3			
18.	bis(chloroethyl)ether	0.010	1	3	3			
19.	2-chloroethyl vinyl ether	0.010	1	3	3			
20.	2-chloronaphthalene	0.010	1	3	3			
21.	2,4,6-trichlorophenol	0.010	1	3	3			
22.	p-chloro-m-cresol	0.010	1	3	3			
23.	chloroform	0.010	1	3	2	1		
24.	2-chlorophenol	0.010	1	3	3			
25.	1,2-dichlorobenzene	0.010	1	3	3			
26.	1,3-dichlorobenzene	0.010	1	3	3			
27.	1,4-dichlorobenzene	0.010	1	3	3			
28.	3,3'-dichlorobenzidine	0.010	1	3	3			
29.	1,1-dichloroethylene	0.010	1	3	3			
30.	1,2-trans-dichloroethylene	0.010	1	3	3			
31.	2,4-dichlorophenol	0.010	1	3	3			
32.	1,2-dichloropropane	0.010	1	3	3			
33.	1,3-dichloropropene	0.010	1	3	3			
34.	2,4-dimethylphenol	0.010	1	3	3			
35.	2,4-dinitrotoluene	0.010	1	3	3			
36.	2,6-dinitrotoluene	0.010	1	3	3			
37.	1,2-diphenylhydrazine	0.010	1	3	3			
38.	ethylbenzene	0.010	1	3	3			
39.	fluoranthene	0.010	1	3	3			

Table V-73 (Continued)

FREQUENCY OF OCCURRENCE OF TOXIC POLLUTANTS
DEGASSING SCRUBBER LIQUOR
RAW WASTEWATER

	Pollutant	Analytical Quantification Level (mg/l)	Number of Streams Analyzed	Number of Samples Analyzed	Number of Times Observed in Samples (mg/l) ND-0.010	0.011-0.100	0.101-1.000	1.000+
40.	4-chlorophenyl phenyl ether	0.010	1	3	3			
41.	4-bromophenyl phenyl ether	0.010	1	3	3			
42.	bis(2-chloroisopropyl)ether	0.010	1	3	3			
43.	bis(2-chloroethoxy)methane	0.010	1	3	3			
44.	methylene chloride	0.010	1	3	3			
45.	methyl chloride (chloromethane)	0.010	1	3	3			
46.	methyl bromide (bromomethane)	0.010	1	3	3			
47.	bromoform (tribromomethane)	0.010	1	3	3			
48.	dichlorobromomethane	0.010	1	3	3			
49.	trichlorofluoromethane	0.010	1	3	3			
50.	dichlorodifluoromethane	0.010	1	3	3			
51.	chlorodibromomethane	0.010	1	3	3			
52.	hexachlorobutadiene	0.010	1	3	3			
53.	hexachlorocyclopentadiene	0.010	1	3	3			
54.	isophorone	0.010	1	3	3			
55.	naphthalene	0.010	1	3	3			
56.	nitrobenzene	0.010	1	3	3			
57.	2-nitrophenol	0.010	1	3	3			
58.	4-nitrophenol	0.010	1	3	3			
59.	2,4-dinitrophenol	0.010	1	3	3			
60.	4,6-dinitro-o-cresol	0.010	1	3	3			
61.	N-nitrosodimethylamine	0.010	1	3	3			
62.	N-nitrosodiphenylamine	0.010	1	3	3			
63.	N-nitrosodi-n-propylamine	0.010	1	3	3			
64.	pentachlorophenol	0.010	1	3	3			
65.	phenol	0.010	1	3	3			
66.	bis (2-ethylhexyl) phthalate	0.010	1	3	3			
67.	butyl benzyl phthalate	0.010	1	3	3			
68.	di-n-butyl phthalate	0.010	1	3	3			
69.	di-n-octyl phthalate	0.010	1	3	3			
70.	diethyl phthalate	0.010	1	3	3			
71.	dimethyl phthalate	0.010	1	3	3			
72.	benzo(a)anthracene	0.010	1	3	3			
73.	benzo(a)pyrene	0.010	1	3	3			
74.	benzo(b)fluoranthene	0.010	1	3	3			
75.	benzo(k)fluoranthene	0.010	1	3	3			
76.	chrysene	0.010	1	3	3			
77.	acenaphthylene	0.010	1	3	3			
78.	anthracene (a)	0.010	1	3	3			

Table V-73 (Continued)

FREQUENCY OF OCCURRENCE OF TOXIC POLLUTANTS
DEGASSING SCRUBBER LIQUOR
RAW WASTEWATER

	Pollutant	Analytical Quantification Level (mg/l)	Number of Streams Analyzed	Number of Samples Analyzed	Number of Times Observed in Samples (mg/l) ND-0.010	0.011-0.100	0.101-1.000	1.000+
79.	benzo(ghi)perylene	0.010	1	3	3			
80.	fluorene	0.010	1	3	3			
81.	phenanthrene (a)	0.010	-	-				
82.	dibenzo(a,h)anthracene	0.010	1	3	3			
83.	indeno (1,2,3-c,d)pyrene	0.010	1	3	3			
84.	pyrene	0.010	1	3	3			
85.	tetrachloroethylene	0.010	1	3	3			
86.	toluene	0.010	1	3	3			
87.	trichloroethylene	0.010	1	3	3			
88.	vinyl chloride (chloroethylene)	0.010	1	3	3			
89.	aldrin	0.005	1	3	3			
90.	dieldrin	0.005	1	3	3			
91.	chlordane	0.005	1	3	3			
92.	4,4'-DDT	0.005	1	3	3			
93.	4,4'-DDE	0.005	1	3	3			
94.	4,4'-DDD	0.005	1	3	3			
95.	alpha-endosulfan	0.005	1	3	3			
96.	beta-endosulfan	0.005	1	3	3			
97.	endosulfan sulfate	0.005	1	3	3			
98.	endrin	0.005	1	3	3			
99.	endrin aldehyde	0.005	1	3	3			
100.	heptachlor	0.005	1	3	3			
101.	heptachlor epoxide	0.005	1	3	3			
102.	alpha-BHC	0.005	1	3	3			
103.	beta-BHC	0.005	1	3	3			
104.	gamma-BHC	0.005	1	3	3			
105.	delta-BHC	0.005	1	3	3			
106.	PCB-1242 (b)	0.005	1	3	3			
107.	PCB-1254 (b)	0.005	-	-				
108.	PCB-1221 (b)	0.005	-	-				
109.	PCB-1232 (b)	0.005	-	-				
110.	PCB-1248 (c)	0.005	1	3	3			
111.	PCB-1260 (c)	0.005	-	-				
112.	PCB-1016 (c)	0.005	-	-				
113.	toxaphene	0.005	1	3	3			
114.	antimony	0.100	1	3	3			
115.	arsenic	0.010	1	3	3			
116.	asbestos	10 MFL	0	0				

Table V-73 (Continued)

FREQUENCY OF OCCURRENCE OF TOXIC POLLUTANTS
DEGASSING SCRUBBER LIQUOR
RAW WASTEWATER

Pollutant	Analytical Quantification Level (mg/l)	Number of Streams Analyzed	Number of Samples Analyzed	Number of Times Observed in Samples (mg/l)			
				ND-0.010	0.011-0.100	0.101-1.000	1.000+
117. beryllium	0.010	1	3	3			
118. cadmium	0.002	1	3	2	1		
119. chromium (total)	0.005	1	3		3		
120. copper	0.009	1	3		2	1	
121. cyanide (total)	0.010	1	3	3			
122. lead	0.020	1	3		2	1	
123. mercury	0.0001	1	3	3			
124. nickel	0.005	1	3	2	1		
125. selenium	0.01	1	3	3			
126. silver	0.02	1	3	3			
127. thallium	0.100	1	3	3			
128. zinc	0.050	1	3			2	1
129. 2,3,7,8-tetrachlorodibenzo-p-dioxin	0.005	0	0				

(a), (b), (c) Reported together.

Table V-74

SAMPLING DATA
DEGASSING SCRUBBER LIQUOR
RAW WASTEWATER

Pollutant	Stream Code	Sample Type	Source	Concentrations (mg/l) Day 1	Day 2	Day 3	Average
Toxic Pollutants							
23. chloroform	R-3	3	0.04	*	<0.02	0.02	<0.01
118. cadmium	R-3	3	<0.0005	0.011	0.0014	0.0008	0.004
119. chromium	R-3	3	<0.0001	0.09	0.022	0.014	0.04
120. copper	R-3	3	0.01	0.25	0.025	0.017	0.097
122. lead	R-3	3	<0.001	0.45	0.09	0.019	0.19
124. nickel	R-3	3	<0.001	0.023	0.008	<0.001	<0.011
128. zinc	R-3	3	0.053	1.3	0.22	0.13	0.6
Nonconventional							
alkalinity	R-3	3		44	89	91	75
aluminum	R-3	3	<0.5	10	<0.5	<0.5	<4
calcium	R-3	3	60	35	51	52	46
chemical oxygen demand (COD)	R-3	3		92	31	24	49
dissolved solids	R-3	3		530	410	420	450
magnesium	R-3	3	22.1	12.3	16.7	19.6	16.2
phenols (total; by 4-AAP method)	R-3	1		0.21	0.011	0.009	0.08
sulfate	R-3	3		100	140	140	130
total organic carbon (TOC)	R-3	3		7.3	5	4.8	6
Conventional							
oil and grease	R-3	1		<5	<5	<5	<5
suspended solids	R-3	3		102	10	<2	<38
pH (standard units)	R-3	1		7.8	7.2	7.2	

Table V-75

EXTRUSION PRESS HYDRAULIC FLUID LEAKAGE

Plant	Water Use l/kkg	Water Use gal/ton	Percent Recycle	Wastewater l/kkg	Wastewater gal/ton
1	*	*	99P	258	61.8
2	*	*	99P	337	81
3	*	*	0	452	108
4	*	*	0	1,429	343
5	*	*	0	2,554	613

* Data not available.

P Periodic discharge.

Statistical Summary

Minimum	258	61.8
Maximum	2,554	613
Mean	1,006	241.4
Median	452	108
Sample	5 of 5 plants	
Mean (no recycle)	1,478	354.7
Sample	3 of 5 plants	
Mean (recycle)	298	71.4
Sample	2 of 5 plants	

Table V-76

FREQUENCY OF OCCURRENCE OF TOXIC POLLUTANTS
EXTRUSION PRESS HYDRAULIC FLUID LEAKAGE
RAW WASTEWATER

	Pollutant	Analytical Quantification Level (mg/l)	Number of Streams Analyzed	Number of Samples Analyzed	Number of Times Observed in Samples (mg/l) ND-0.010	0.011-0.100	0.101-1.000	1.000+
1.	acenaphthene	0.010	2	6	6			
2.	acrolein	0.010	2	6	6			
3.	acrylonitrile	0.010	2	6	6			
4.	benzene	0.010	2	6	6			
5.	benzidine	0.010	2	6	6			
6.	carbon tetrachloride	0.010	2	6	6			
7.	chlorobenzene	0.010	2	6	6			
8.	1,2,4-trichlorobenzene	0.010	2	6	6			
9.	hexachlorobenzene	0.010	2	6	6			
10.	1,2-dichloroethane	0.010	2	6	6			
11.	1,1,1-trichloroethane	0.010	2	6	5	1		
12.	hexachloroethane	0.010	2	6	6			
13.	1,1-dichloroethane	0.010	2	6	6			
14.	1,1,2-trichloroethane	0.010	2	6	6			
15.	1,1,2,2-tetrachloroethane	0.010	2	6	6			
16.	chloroethane	0.010	2	6	6			
17.	bis(chloromethyl)ether	0.010	2	6	6			
18.	bis(chloroethyl)ether	0.010	2	6	6			
19.	2-chloroethyl vinyl ether	0.010	2	6	6			
20.	2-chloronaphthalene	0.010	2	6	6			
21.	2,4,6-trichlorophenol	0.010	2	6	6			
22.	p-chloro-m-cresol	0.010	2	6	5			1
23.	chloroform	0.010	2	6	6			
24.	2-chlorophenol	0.010	2	6	6			
25.	1,2-dichlorobenzene	0.010	2	6	6			
26.	1,3-dichlorobenzene	0.010	2	6	6			
27.	1,4-dichlorobenzene	0.010	2	6	6			
28.	3,3'-dichlorobenzidine	0.010	2	6	6			
29.	1,1-dichloroethylene	0.010	2	6	6			
30.	1,2-trans-dichloroethylene	0.010	2	6	6			
31.	2,4-dichlorophenol	0.010	2	6	6			
32.	1,2-dichloropropane	0.010	2	6	6			
33.	1,3-dichloropropene	0.010	2	6	6			
34.	2,4-dimethylphenol	0.010	2	6	6			
35.	2,4-dinitrotoluene	0.010	2	6	6			
36.	2,6-dinitrotoluene	0.010	2	6	6			
37.	1,2-diphenylhydrazine	0.010	2	6	6			
38.	ethylbenzene	0.010	2	6	6			
39.	fluoranthene	0.010	2	6	6			

Table V-76 (Continued)

FREQUENCY OF OCCURRENCE OF TOXIC POLLUTANTS
EXTRUSION PRESS HYDRAULIC FLUID LEAKAGE
RAW WASTEWATER

	Pollutant	Analytical Quantification Level (mg/l)	Number of Streams Analyzed	Number of Samples Analyzed	Number of Times Observed in Samples (mg/l) ND-0.010	0.011-0.100	0.101-1.000	1.000+
40.	4-chlorophenyl phenyl ether	0.010	2	6	6			
41.	4-bromophenyl phenyl ether	0.010	2	6	6			
42.	bis(2-chloroisopropyl)ether	0.010	2	6	6			
43.	bis(2-chloroethoxy)methane	0.010	2	6	6			
44.	methylene chloride	0.010	2	6	1	5		
45.	methyl chloride (chloromethane)	0.010	2	6	6			
46.	methyl bromide (bromomethane)	0.010	2	6	6			
47.	bromoform (tribromomethane)	0.010	2	6	6			
48.	dichlorobromomethane	0.010	2	6	6			
49.	trichlorofluoromethane	0.010	2	6	6			
50.	dichlorodifluoromethane	0.010	2	6	6			
51.	chlorodibromomethane	0.010	2	6	6			
52.	hexachlorobutadiene	0.010	2	6	6			
53.	hexachlorocyclopentadiene	0.010	2	6	6			
54.	isophorone	0.010	2	6	6			
55.	naphthalene	0.010	2	6	6			
56.	nitrobenzene	0.010	2	6	6			
57.	2-nitrophenol	0.010	2	6	6			
58.	4-nitrophenol	0.010	2	6	6			
59.	2,4-dinitrophenol	0.010	2	6	6			
60.	4,6-dinitro-o-cresol	0.010	2	6	6			
61.	N-nitrosodimethylamine	0.010	2	6	6			
62.	N-nitrosodiphenylamine	0.010	2	6	6			
63.	N-nitrosodi-n-propylamine	0.010	2	6	6			
64.	pentachlorophenol	0.010	2	6	6			
65.	phenol	0.010	2	6	1		2	3
66.	bis (2-ethylhexyl) phthalate	0.010	2	6	6			
67.	butyl benzyl phthalate	0.010	2	6	6			
68.	di-n-butyl phthalate	0.010	2	6	5	1		
69.	di-n-octyl phthalate	0.010	2	6	6			
70.	diethyl phthalate	0.010	2	6	6			
71.	dimethyl phthalate	0.010	2	6	6			
72.	benzo(a)anthracene	0.010	2	6	6			
73.	benzo(a)pyrene	0.010	2	6	6			
74.	benzo(b)fluoranthene	0.010	2	6	6			
75.	benzo(k)fluoranthene	0.010	2	6	6			
76.	chrysene	0.010	2	6	5	1		
77.	acenaphthylene	0.010	2	6	6			
78.	anthracene (a)	0.010	2	6	6			

Table V-76 (Continued)

FREQUENCY OF OCCURRENCE OF TOXIC POLLUTANTS
EXTRUSION PRESS HYDRAULIC FLUID LEAKAGE
RAW WASTEWATER

	Pollutant	Analytical Quantification Level (mg/l)	Number of Streams Analyzed	Number of Samples Analyzed	Number of Times Observed in Samples (mg/l) ND-0.010	0.011-0.100	0.101-1.000	1.000+
79.	benzo(ghi)perylene	0.010	2	6	6			
80.	fluorene	0.010	2	6	6			
81.	phenanthrene	0.010	2	6	5	1		
82.	dibenzo(a,h)anthracene	0.010	2	6	6			
83.	indeno (1,2,3-c,d)pyrene	0.010	2	6	6			
84.	pyrene	0.010	2	6	6			
85.	tetrachloroethylene	0.010	2	6	6			
86.	toluene	0.010	2	6	6			
87.	trichloroethylene	0.010	2	6	6			
88.	vinyl chloride (chloroethylene)	0.010	2	6	6			
89.	aldrin	0.005	2	6	6			
90.	dieldrin	0.005	2	6	6			
91.	chlordane	0.005	2	6	6			
92.	4,4'-DDT	0.005	2	6	6			
93.	4,4'-DDE	0.005	2	6	6			
94.	4,4'-DDD	0.005	2	6	6			
95.	alpha-endosulfan	0.005	2	6	6			
96.	beta-endosulfan	0.005	2	6	6			
97.	endosulfan sulfate	0.005	2	6	6			
98.	endrin	0.005	2	6	6			
99.	endrin aldehyde	0.005	2	6	6			
100.	heptachlor	0.005	2	6	6			
101.	heptachlor epoxide	0.005	2	6	6			
102.	alpha-BHC	0.005	2	6	6			
103.	beta-BHC	0.005	2	6	6			
104.	gamma-BHC	0.005	2	6	6			
105.	delta-BHC	0.005	2	6	6			
106.	PCB-1242 (b)	0.005	2	6	6			
107.	PCB-1254 (b)	0.005	-	-				
108.	PCB-1221 (b)	0.005	-	-				
109.	PCB-1232 (b)	0.005	-	-				
110.	PCB-1248 (c)	0.005	2	6	3			3
111.	PCB-1260 (c)	0.005	-	-				
112.	PCB-1016 (c)	0.005	-	-				
113.	toxaphene	0.005	2	6	6			
114.	antimony	0.100	2	6	6			
115.	arsenic	0.010	2	6	6			
116.	asbestos	10 MFL	0	0				

Table V-76 (Continued)

FREQUENCY OF OCCURRENCE OF TOXIC POLLUTANTS
EXTRUSION PRESS HYDRAULIC FLUID LEAKAGE
RAW WASTEWATER

Pollutant	Analytical Quantification Level (mg/l)	Number of Streams Analyzed	Number of Samples Analyzed	Number of Times Observed in Samples (mg/l)			
				ND-0.010	0.011-0.100	0.101-1.000	1.000+
117. beryllium	0.010	2	6	6			
118. cadmium	0.002	2	6	6			
119. chromium (total)	0.005	2	6	6			
120. copper	0.009	2	6		2	1	3
121. cyanide (total)	0.010	2	6	6			
122. lead	0.020	2	6	6			
123. mercury	0.0001	2	6	6			
124. nickel	0.005	2	6	6			
125. selenium	0.01	2	6	6			
126. silver	0.02	2	6	6			
127. thallium	0.100	2	6	6			
128. zinc	0.050	2	6	1	3	2	
129. 2,3,7,8-tetrachlorodibenzo-p-dioxin	0.005	0	0				

(a), (b), (c) Reported together.

Table V-77

SAMPLING DATA
EXTRUSION PRESS HYDRAULIC FLUID LEAKAGE
RAW WASTEWATER

Pollutant	Stream Code	Sample Type	Source	Concentrations (mg/l) Day 1	Day 2	Day 3	Average
11. 1,1,1-trichloroethane	AA-4	8	ND	ND	ND	ND	ND
	AA-5	8	ND	0.0605	ND	ND	0.0605
22. p-chloro-m-cresol	AA-4	8	ND	ND	ND	ND	ND
	AA-5	8	ND	2.47	ND	ND	2.47
37. 1,2-diphenylhydrazine	AA-4	8	ND	ND	*	ND	*
	AA-5	8	ND	ND	ND	ND	ND
44. methylene chloride	AA-4	8	0.0148	0.0785	ND	0.0865	0.0825
	AA-5	8	0.0148	0.0785	0.00536	0.0199	0.0507
65. phenol	AA-4	8	ND	0.326	0.181	ND	0.234
	AA-5	8	ND	22.8	17.4	32.3	24.2
68. di-n-butyl phthalate	AA-4	8	*	0.0458	*	ND	0.0262
	AA-5	8	*	ND	ND	ND	ND
72. benzo(a)anthracene	AA-4	8	ND	ND	*	ND	*
	AA-5	8	ND	ND	ND	ND	ND
76. chrysene	AA-4	8	ND	ND	0.0116	ND	0.0116
	AA-5	8	ND	ND	ND	ND	ND
81. phenanthrene	AA-4	8	ND	ND	0.0159	ND	0.0159
	AA-5	8	ND	ND	ND	ND	ND
110. PCB-1248 (a)	AA-4	8	ND	ND	ND	ND	ND
111. PCB-1260 (a)	AA-5	8	ND	2.181	4.244	3.057	3.161
112. PCB-1016 (a)							
114. antimony	AA-4	8	<0.010	<0.010	<0.010	<0.010	<0.010
	AA-5	8	<0.010	<0.100	<0.10	<0.10	<0.100
115. arsenic	AA-4	8	<0.010	<0.010	<0.010	<0.010	<0.010
	AA-5	8	<0.010	<0.100	<0.10	<0.10	<0.100
117. beryllium	AA-4	8	<0.005	<0.005	<0.005	<0.005	<0.005
	AA-5	8	<0.005	<0.050	<0.050	<0.050	<0.050

(a) Reported together.

Table V-77 (Continued)

SAMPLING DATA
EXTRUSION PRESS HYDRAULIC FLUID LEAKAGE
RAW WASTEWATER

Pollutant	Stream Code	Sample Type	Source	Concentrations (mg/l) Day 1	Day 2	Day 3	Average
118. cadmium	AA-4	8	<0.020	<0.020	<0.020	<0.020	<0.020
	AA-5	8	<0.020	<0.200	<0.200	<0.200	<0.200
119. chromium	AA-4	8	<0.020	<0.020	<0.020	<0.020	<0.020
	AA-5	8	<0.020	<0.200	<0.200	<0.200	<0.200
120. copper	AA-4	8	<0.050	0.150	0.050	0.100	0.100
	AA-5	8	<0.050	1.5	1.5	1.5	1.5
121. cyanide (total)	AA-4	8	<0.02	<0.02	<0.02	<0.02	<0.02
	AA-5	8	<0.02	<0.02	<0.02	<0.02	<0.02
122. lead	AA-4	8	<0.050	<0.050	<0.050	<0.050	<0.050
	AA-5	8	<0.050	<0.500	<0.500	<0.500	<0.500
123. mercury	AA-4	8	<0.0002	<0.0002	<0.0002	<0.0002	<0.0002
	AA-5	8	<0.0002	<0.0002	<0.0002	<0.0002	<0.0002
124. nickel	AA-4	8	<0.050	<0.050	<0.050	<0.050	<0.050
	AA-5	8	<0.050	<0.500	<0.500	<0.500	<0.500
125. selenium	AA-4	8	<0.010	<0.010	<0.010	<0.010	<0.010
	AA-5	8	<0.010	<0.100	<0.10	<0.10	<0.100
126. silver	AA-4	8	<0.010	<0.010	<0.010	<0.010	<0.010
	AA-5	8	<0.010	<0.100	<0.10	<0.10	<0.100
127. thallium	AA-4	8	<0.010	<0.010	<0.010	<0.010	<0.010
	AA-5	8	<0.010	<0.100	<0.10	<0.10	<0.100
128. zinc	AA-4	8	<0.020	0.060	0.040	0.040	0.050
	AA-5	8	<0.020	0.200	<0.200	0.200	<0.200
Nonconventional							
aluminum	AA-4	8	<0.100	0.100	<0.100	<0.100	<0.100
	AA-5	8	<0.100	<1.0	<1.0	<1.0	<1.00
barium	AA-4	8	0.250	0.150	0.200	0.200	0.180
	AA-5	8	0.250	<0.500	<0.500	<0.500	<0.500

Table V-77 (Continued)

SAMPLING DATA
EXTRUSION PRESS HYDRAULIC FLUID LEAKAGE
RAW WASTEWATER

Pollutant	Stream Code	Sample Type	Source	Concentrations (mg/l) Day 1	Day 2	Day 3	Average
boron	AA-4	8	<0.100	<0.100	<0.100	<0.100	<0.100
	AA-5	8	<0.100	6.000	6.0	6.0	6.00
calcium	AA-4	8	117	78.7	84.1	84.3	82.4
	AA-5	8	117	24.0	23.0	23.0	23.0
cobalt	AA-4	8	<0.050	<0.050	<0.050	<0.050	<0.050
	AA-5	8	<0.050	<0.50	<0.50	<0.50	<0.50
iron	AA-4	8	2.85	1.8	1.3	1.4	1.5
	AA-5	8	2.85	5.50	4.50	5.50	5.20
magnesium	AA-4	8	33.9	25.8	26.9	27.3	26.7
	AA-5	8	33.9	22.0	22.0	22.0	22.0
manganese	AA-4	8	<5.0	0.100	0.100	0.100	0.100
	AA-5	8	<5.0	<0.50	<0.50	<0.50	<0.50
molybdenum	AA-4	8	<0.050	<0.050	<0.050	<0.050	<0.050
	AA-5	8	<0.050	<0.50	<0.50	<0.50	<0.50
sodium	AA-4	8	4.8	124.0	43.8	41.2	69.7
	AA-5	8	4.8	293.0	288.0	290.0	290.0
tin	AA-4	8	<0.050	<0.050	<0.050	<0.050	<0.050
	AA-5	8	<0.050	<0.50	<0.50	<0.50	<0.50
titanium	AA-4	8	<0.050	<0.050	<0.050	<0.050	<0.050
	AA-5	8	<0.050	<0.50	<0.50	0.50	<0.50
vanadium	AA-4	8	<0.050	<0.050	<0.050	<0.050	<0.050
	AA-5	8	<0.050	1.00	<0.50	<0.50	<0.67
yttrium	AA-4	8	<0.050	<0.050	<0.050	<0.050	<0.050
	AA-5	8	<0.050	<0.50	<0.50	<0.50	<0.050
acidity	AA-4	8	<1	<1	<1	<1	<1
	AA-5	8	<1	<1	<1	<1	<1
alkalinity	AA-4	8	270	360	280	280	370
	AA-5	8	270	900	1,100	900	970

Table V-77 (Continued)

SAMPLING DATA
EXTRUSION PRESS HYDRAULIC FLUID LEAKAGE
RAW WASTEWATER

Pollutant	Stream Code	Sample Type	Source	Concentrations (mg/l) Day 1	Day 2	Day 3	Average
chloride	AA-4	8	24	21	19	17	19
	AA-5	8	24	43.5	260	55	120
chemical oxygen demand (COD)	AA-4	8	23	685	691	590	655
	AA-5	8	23	7,770	33,300	16,300	19,120
fluoride	AA-4	8	0.17	<0.05	0.34	0.67	0.35
	AA-5	8	0.17	1.7	0.98	1.4	1.4
ammonia nitrogen	AA-4	8	0.10	0.35	0.53	<0.05	<0.31
	AA-5	8	0.10	0.83	0.62	0.45	0.63
phenols (total; by 4-AAP method)	AA-4	8	<0.005	0.14	0.019	0.021	0.06
	AA-5	8	<0.005	10	5.3	0.038	5.1
sulfate	AA-4	8	115	90	82	96	89
	AA-5	8	115	190	200	210	200
total dissolved solids (TDS)	AA-4	8	530	781	490	480	584
	AA-5	8	530	3,900	3,900	4,500	4,100
total organic carbon (TOC)	AA-4	8	<1	160	170	121	150
	AA-5	8	<1	1,020	4,300	1,000	2,110
phosphate	AA-4	8	<3	<3	<3	<3	<3
	AA-5	8	<3	600	600	750	650
total solids (TS)	AA-4	8	590	917	690	610	740
	AA-5	8	590	13,900	12,200	12,300	12,800
Conventional							
suspended solids	AA-4	8	17	31	120	73	75
	AA-5	8	17	568	1,090	1,300	986
pH (standard units)	AA-4	8	7.44	8.74	7.59	7.74	
	AA-5	8	7.44	7.18	7.35	7.51	
oil and grease	AA-4	8	<0.5	200	470	490	390
	AA-5	8	<0.5	6,300	6,300	7,300	6,630

*Detection limit raised due to interference.

Table V-78

SAMPLING DATA
ADDITIONAL WASTEWATER
RAW WASTEWATER

Pollutant	Stream Code	Sample Type	Source	Concentrations (mg/l) Day 1	Day 2	Day 3	Average
Toxic Pollutants							
1. acenaphthene	D-6	3	ND	ND	0.790	ND	0.790
	F-4	1	ND	*			*
4. benzene	D-6	1	ND	ND	*	*	*
	D-8	3	ND	ND	ND	*	*
	F-4	1	ND	0.016			0.016
	F-8	2	ND	ND	0.057	*	0.029
	J-4	1	*	*	*	*	*
	R-8	1	ND	*	ND	ND	*
	V-7	2	0.004	*	*		*
21. 2,4,6-trichlorophenol	B-9	3	*	*	0.015	ND	*
	C-2	1	ND	1.800			1.800
	D-6	3	ND	*	ND	ND	*
	F-5	3	ND	ND	*	*	*
	F-8	3	ND	ND	*	ND	*
	N-4	3	ND	ND	ND	*	*
	N-5	2	ND	*			*
23. chloroform	B-9	1	*	0.013	0.015	0.012	0.013
	C-2	1	0.055	*			*
	C-5	1	0.055	0.520			0.520
	D-6	1	0.020	0.013	0.011	0.022	0.015
	D-8	3	0.02	*	*	*	*
	F-4	1	0.012	0.042			0.042
	F-5	2	0.012	0.017	0.066	0.014	0.032
	F-8	2	0.012	0.017	0.072	0.02	0.036
	L-3	1	0.1	*	ND	ND	*
	L-4		0.1	0.080			0.080
	N-4	3	0.04	*	*	*	*
	N-5	2	0.04	0.040	0.030	0.030	0.033
	R-8	1	0.040	*	ND	0.020	*
24. 2-chlorophenol	C-2	1	ND	0.620			0.620
	D-6	3	ND	0.013	ND	ND	0.013
	D-8	3	ND	*	ND	ND	*
	F-5	3	ND	ND	*	0.015	*

Table V-78 (Continued)

SAMPLING DATA
ADDITIONAL WASTEWATER
RAW WASTEWATER

Pollutant	Stream Code	Sample Type	Source	Concentrations (mg/l) Day 1	Day 2	Day 3	Average
34. 2,4-dimethylphenol	B-9	3	ND	ND	0.020	ND	0.020
	C-5	1	ND	*			*
	D-6	3	*	0.018	ND	ND	0.018
	D-8	3	*	0.018	ND	ND	0.018
	J-4	1	ND	*	ND		*
	L-3	2	ND	*	*	ND	*
38. ethylbenzene	B-9	1	ND	ND	*	ND	*
	J-4	1	ND	ND	0.018	ND	0.018
	R-8	1	ND	*	ND	ND	*
39. fluoranthene	J-5	3	ND	0.028	*	ND	0.014
44. methylene chloride	B-9	1	*	0.017	0.012	0.016	0.015
	C-2	1	0.220	0.092			0.092
	C-5	1	0.220	2.100			2.100
	D-6	1	*	*	*	0.620	0.207
	D-8	3	*	*	0.018	0.093	0.037
	F-4	1	0.024	0.233			0.233
	F-5	2	0.024	0.051	2.000	0.103	0.718
	F-8	2	0.024	0.079	0.510		0.295
	J-4	1	ND	0.050	ND	0.014	0.032
	J-5	1	ND	*	0.250	0.012	0.087
	L-3	1	ND	*	ND	ND	*
	N-4	3	ND	*	*	ND	*
	R-7	1	*	*	*	*	*
	R-8	1	*	*	ND	0.090	0.045
	V-7	2	0.015	0.030	0.016		0.023
55. naphthalene	D-6	3	ND	ND	ND	*	*
	L-3	2	ND	*	*	ND	*
	N-4	3	ND	ND	ND	*	*
	N-5	2	ND	0.170			0.170
58. 4-nitrophenol	J-5	3	ND	0.025	*	*	*
59. 2,4-dinitrophenol	B-9	3	ND	ND	ND	0.045	0.045
	C-2	1	ND	10.000			10.000
	C-5	1	ND	*			*
	F-5	3	ND	ND	ND	*	*
	J-5	3	ND	0.012	0.100	ND	0.056

Table V-78 (Continued)

SAMPLING DATA
ADDITIONAL WASTEWATER
RAW WASTEWATER

	Pollutant	Stream Code	Sample Type	Source	Concentrations (mg/l) Day 1	Day 2	Day 3	Average
62.	N-nitrosodiphenylamine	J-5	3	ND	ND	0.200	ND	0.200
64.	pentachlorophenol	C-2	1	ND	5.200			5.200
65.	phenol	B-9	3	*	0.036	*	ND	0.018
		D-6	3	ND	ND	*	*	*
		D-8	3	ND	ND	ND	*	*
		V-7	2	ND	0.260	0.140		0.200
66.	bis(2-ethylhexyl) phthalate	C-2	1	*	1.500			1.500
		D-6	1	*	350.000	640.000		495.000
		F-5	3	ND	ND	*	*	*
		J-4	1	ND		ND	*	*
		J-5	3	ND	0.072	0.038	0.016	0.042
		L-3	2	ND	0.020	0.020	0.020	0.020
		N-4	3	ND	*	*	*	*
		R-8	3	ND	ND	ND	*	*
		V-7	2	0.008	*	*		*
67.	butyl benzyl phthalate	J-5	3	ND	0.031	*	*	*
68.	di-n-butyl phthalate	B-9	3	*	*	*	ND	*
		D-6	3	*	ND	*	*	*
		D-8	3	*	ND	*	0.024	0.012
		F-4	1	*	*			*
		F-5	3	*	*	*	*	*
		F-8	3	*	*	ND	ND	*
		J-5	3	0.041	0.250	0.022	ND	0.136
70.	diethyl phthalate	J-5	3	*	0.027	ND	ND	0.027
73.	benzo(a)pyrene	J-5	3	ND	0.015	ND	ND	0.015
74.	3,4-benzo-fluoranthene (a)	J-5	3	ND	0.023	ND	ND	0.023
75.	benzo(a)-fluoranthene (a)							
76.	chrysene	D-6	3	ND	*	ND	*	*
		F-5	3	*	ND	0.014	ND	0.014
		F-8	3	*	*	ND	ND	*
		J-5	3	ND	0.030	ND	ND	0.030
		N-4	3	ND	ND	*	*	*

Table V-78 (Continued)

SAMPLING DATA
ADDITIONAL WASTEWATER
RAW WASTEWATER

Pollutant	Stream Code	Sample Type	Source	Concentrations (mg/l) Day 1	Day 2	Day 3	Average
77. acenaphthylene	F-4	1	*	*			*
	L-3	2	ND	*	*	ND	*
78. anthracene (b) 81. phenanthrene (b)	J-5	3	ND	0.067	*	*	0.022
80. fluorene	F-4	1	ND	*			*
	F-5	3	ND	*	ND	*	*
	F-8	3	ND	0.013	ND	ND	0.013
	N-5	2	ND	*			*
84. pyrene	J-5	3	*	0.048	*	ND	0.024
85. tetrachloroethylene	D-6	1	ND	*	*	*	*
	D-8	3	ND	ND	ND	*	*
	F-4	1	ND	*			*
	F-5	2	ND	ND	*	*	*
	F-8	2	ND	*	ND	*	*
	J-4	1	ND	*	ND	*	*
	V-7	2	0.002	ND	*		*
86. toluene	D-6	1	ND	ND	ND	*	*
	F-5	2	*	ND	0.036	ND	0.036
	F-8	2	*	ND	0.037	ND	0.037
	J-4	1	ND	ND	*	*	*
	L-3	2	ND	*	ND	*	*
	N-4	3	ND	ND	ND	*	*
	N-5	2	ND	*	ND	*	*
	R-8	1	ND	0.020	ND	*	0.010
87. trichloroethylene	J-5	3	ND	*	0.015	*	*
89. aldrin	C-2	1	ND	0.011			0.011
95. alpha-endosulfan	B-9	3	ND	ND	ND	**	**
	C-2	1	ND	0.028			0.028
97. endosulfan sulfate	B-9	3	ND	ND	**	ND	**
	C-2	1	ND	0.016			0.016
	D-8	3	ND	**			**
	F-4	1	ND	**			**
	F-5	3	ND	**			**
	F-8	3	ND	**			**

Table V-78 (Continued)

SAMPLING DATA
ADDITIONAL WASTEWATER
RAW WASTEWATER

Pollutant	Stream Code	Sample Type	Source	Concentrations (mg/l) Day 1	Day 2	Day 3	Average
102. alpha-BHC	B-9	3	ND	ND	**	ND	**
	C-2	1	**	0.018			0.018
	C-5	1	**	**			**
	D-6	3	**	**			**
105. delta-BHC	C-2	1	ND	0.011			0.011
114. antimony	AA-2		<0.010	<0.010			<0.010
	AA-3		<0.010		<0.010		<0.010
	AA-8		<0.010	<0.020*			<0.020*
	AA-9		<0.010	<0.010			<0.010
	EE-5	8	<0.002	0.032			0.032
115. arsenic	L-3	2	<0.0002	0.0004	<0.0002	<0.0002	<0.0003
	R-8	3	0.0037	0.036	0.028	0.024	0.029
	V-7	2	<0.005	<0.005	0.014		<0.010
	AA-2		<0.010	<0.010			<0.010
	AA-3		<0.010		<0.010		<0.010
	AA-8		<0.010	2.0			2.0
	AA-9		<0.010	1.5			1.5
	EE-5	8	0.021	0.126			0.126
117. beryllium	R-8	3	0.0017	0.0075	<0.0005	<0.0005	<0.0028
	V-7	2	<0.001	<0.001	0.001		<0.001
	AA-2	1	<0.005	<0.005			<0.005
	AA-3	1	<0.005		<0.005		<0.005
	AA-8	1	<0.005	<0.500			<0.005
	AA-9	1	<0.005	<0.500			<0.005
	EE-5	8	<0.010	<0.010			<0.010
118. cadmium	B-9	3		0.006			0.006
	J-5	3	<0.010	0.180	0.180	0.180	0.180
	N-4	3	<0.0005	<0.0005	0.0013	<0.0005	<0.0008
	R-8	3	<0.0005	0.0075	0.0096	0.0096	0.0089
	V-7	2	<0.001	0.002	0.001		0.002
	AA-2	1	<0.020	<0.020			<0.020
	AA-3	1	<0.020		<0.020		<0.020
	AA-8	1	<0.020	<2.0			<2.0
	AA-9	1	<0.020	<2.0			<2.0
	EE-5	8	<0.010	<0.010			<0.010

Table V-78 (Continued)

SAMPLING DATA
ADDITIONAL WASTEWATER
RAW WASTEWATER

Pollutant	Stream Code	Sample Type	Source	Concentrations (mg/l) Day 1	Day 2	Day 3	Average
119. chromium	C-2	1	0.007	0.05			0.05
	J-4	1	<0.03	0.140	0.370		0.255
	J-5	3	<0.03	1,050	875	770	898
	L-1	1	<0.001	0.03			0.03
	N-4	3	<0.001	0.01	0.009	0.008	0.01
	R-8	3	<0.001	1.9	2	1.6	2
	V-7	2	<0.001	0.054	0.028		0.041
	AA-2	1	<0.020	<0.020			<0.020
	AA-3	1	<0.020		<0.020		<0.020
	AA-8	1	<0.020	<2.0			<2.0
	AA-9	1	<0.020	<2.0			<2.0
	EE-5	8	0.021	0.262			0.262
120. copper	B-9	3		0.02	0.02	0.02	0.02
	C-2	1	0.02	0.3			0.3
	D-8	3	<0.009	0.010	<0.009		<0.010
	J-4	1	<0.03	15	2.7		9
	J-5	3	<0.03	2,000	2,260	2,270	2,180
	L-2	1	0.01	0.006			0.006
	L-3	2	0.01	0.011	0.004	0.01	0.01
	N-4	3	0.008	0.017	0.018	0.015	0.017
	N-5	2	0.008	0.005			0.005
	R-8	3	0.01	4	4.7	3.6	4
	V-7	2	0.027	5.5	1.8		3.7
	AA-2	1	<0.050	<0.050			<0.050
	AA-3	1	<0.050		<0.050		<0.050
	AA-8	1	<0.050	<5.0			<5.0
	AA-9	1	<0.050	<5.0			<5.0
	EE-5	8	<0.010	0.604			0.604
121. cyanide	B-9	1		0.051	0.046	0.031	0.043
	D-6	1		0.001	0.006	<0.001	<0.003
	D-8	1	ND	<0.001	<0.001	0.002	<0.001
	F-8	3		0.001	<0.001	<0.001	<0.001
	J-4	1		0.004	0.002	0.003	0.003
	J-5	1	ND	0.069	0.027	0.028	0.041
	R-8	1		0.02	0.24	<0.02	<0.09
	AA-2	1	<0.02	<0.02			<0.02
	AA-3	1	<0.02		<0.02		<0.02
	AA-8	1	<0.02	<0.02			<0.02
	AA-9	1	<0.02	<0.02			<0.02
	EE-5	8	<0.02	0.033			0.033

Table V-78 (Continued)

SAMPLING DATA
ADDITIONAL WASTEWATER
RAW WASTEWATER

Pollutant	Stream Code	Sample Type	Source	Concentrations (mg/l) Day 1	Day 2	Day 3	Average
122. lead	C-2	1	0.03	0.3			0.3
	J-4	1	<0.05	0.05	1		1
	J-5	3	<0.05	4.0	2.8	2.9	3.2
	L-2	1	0.014	0.023			0.023
	L-3	2	0.014	0.009	0.006	0.004	0.006
	N-4	3	0.01	0.015	0.015	0.034	0.021
	N-5	2	0.01	0.005			0.005
	R-8	3	<0.001	0.11	1.7	1.5	1.1
	V-7	2	0.079	0.50	0.18		0.34
	AA-2	1	<0.050	<0.050			<0.050
	AA-3	1	<0.050		<0.050		<0.050
	AA-8	1	<0.050	<5.0			<5.0
	AA-9	1	<0.050	<5.0			<5.0
	EE-5	8	<0.100	<0.100			<0.100
123. mercury	B-9	3		0.0006	0.003	0.0006	0.001
	C-5	1	0.0004	0.0003			0.0003
	D-8	3	0.0006	0.0007	0.001		0.001
	F-4	1	0.0006	0.0005			0.0005
	F-5	3	0.0006	0.0005	0.0003	<0.0001	<0.0003
	F-8	3	0.0006	0.0002	0.0001		0.0002
	L-2	1	0.0073	0.012			0.012
	L-3	2	0.0073	0.0065	0.009	0.0023	0.006
	N-4	3	0.0091	0.0093	0.011	0.007	0.009
	N-5	2	0.0091	0.0082			0.0082
	AA-2	1	<0.0002	<0.0002			<0.0002
	AA-3	1	<0.0002		<0.0002		<0.0002
	AA-8	1	<0.0002	<0.002*			<0.002*
	AA-9	1	<0.0002	0.0004			0.0004
	EE-5	8	<0.005	<0.005			<0.005
124. nickel	J-4	1	<0.020	<0.02	0.07		<0.05
	J-5	3	<0.020	2.5	2.7	2.6	2.6
	R-8	3	<0.001	0.039	0.03	0.02	0.03
	V-7	2	0.009	0.048	0.022		0.035
	AA-2	1	<0.050	<0.050			<0.050
	AA-3	1	<0.050		<0.050		<0.050
	AA-8	1	<0.050	<5.0			<5.0
	AA-9	1	<0.050	<5.0			<5.0
	EE-5	8	<0.020	<0.020			<0.020

Table V-78 (Continued)

SAMPLING DATA
ADDITIONAL WASTEWATER
RAW WASTEWATER

Pollutant	Stream Code	Sample Type	Source	Concentrations (mg/l) Day 1	Day 2	Day 3	Average
125. selenium	V-7	2	0.020	0.017	<0.005		<0.011
	AA-2	1	<0.010	<0.010			<0.010
	AA-3	1	<0.010		<0.010		<0.010
	AA-8	1	<0.010	<0.500†			<0.500†
	AA-9	1	<0.010	<0.500†			<0.500†
	EE-5	8	<0.005	<0.005			<0.005
126. silver	AA-2	1	<0.010	<0.010			<0.010
	AA-3	1	<0.010		<0.010		<0.010
	AA-8	1	<0.010	<0.020†			<0.020†
	AA-9	1	<0.010	<0.010			<0.010
	EE-5	8	<0.001	0.001			0.001
127. thallium	AA-2	1	<0.010	<0.010			<0.010
	AA-3	1	<0.010		<0.010		<0.010
	AA-8	1	<0.010	<0.010			<0.010
	AA-9	1	<0.010	<0.010			<0.010
	EE-5	8	<0.001	<0.001			<0.001
128. zinc	C-2	1	0.2	0.400			0.400
	J-4	1	<0.04	0.620	4.8		2.7
	J-5	3	<0.04	1,950	2,000	2,000	1,980
	L-2	1	0.053	0.66			0.66
	N-4	3	<0.01	0.13	0.14	0.13	0.13
	N-5	2	<0.01	0.038			0.038
	R-8	3	0.053	5.5	7.1	6.8	6.5
	V-7	2	0.50	1.8	7.0		4.4
	AA-2	1	<0.020	0.060			0.060
	AA-3	1	<0.020		0.140		0.140
	AA-8	1	<0.020	172			172
	AA-9	1	<0.020	30.0			30.0
	EE-5	8	0.064	0.039			0.039
Nonconventional							
acidity	AA-2	1	<1	<1			<1
	AA-3	1	<1		<1		<1
	AA-8	1	<1	<1			<1
	AA-9	1	<1	<1			<1
	EE-5	8	<1	<1			<1

†Detection limit raised due to interference.

Table V-78 (Continued)

SAMPLING DATA
ADDITIONAL WASTEWATER
RAW WASTEWATER

Pollutant	Stream Code	Sample Type	Source	Concentrations (mg/l) Day 1	Day 2	Day 3	Average
alkalinity	AA-2	1	270	260			260
	AA-3	1	270		242		242
	AA-8	1	270	128,000			128,000
	AA-9	1	270	86,000			86,000
	EE-5	8	22	800			800
aluminum	AA-2	1	<0.100	1.2			1.2
	AA-3	1	<0.100		0.1		0.1
	AA-8	1	<0.100	2,090			2,090
	AA-9	1	<0.100	1,990			1,990
	EE-5	8	0.011	87.8			87.8
ammonia nitrogen	AA-2	1	0.10	<0.05			<0.05
	AA-3	1	0.10		<0.02		<0.02
	AA-8	1	0.10	16			16
	AA-9	1	0.10	7.2			7.2
	EE-5	8	<0.05	0.133			0.133
barium	AA-2	1	0.250	0.100			0.100
	AA-3	1	0.250		0.100		0.100
	AA-8	1	0.250	<5.0			<5.0
	AA-9	1	0.250	<5.0			<5.0
	EE-5	8	0.021	<0.020			<0.020
boron	AA-2	1	<0.100	0.100			0.100
	AA-3	1	<0.100		0.100		0.100
	AA-8	1	<0.100	20.0			20.0
	AA-9	1	<0.100	10.0			10.0
	EE-5	8	<0.050	<0.050			<0.050
calcium	AA-2	1	117	102.0			102.0
	AA-3	1	117		101		101
	AA-8	1	117	<10.0			<10.0
	AA-9	1	117	<10.0			<10.0
	EE-5	8	4.62	4.80			4.80

Table V-78 (Continued)

SAMPLING DATA
ADDITIONAL WASTEWATER
RAW WASTEWATER

Pollutant	Stream Code	Sample Type	Source	Concentrations (mg/l) Day 1	Day 2	Day 3	Average
chemical oxygen demand (COD)	B-9	3	82	60	67	73	67
	C-2	1	<5	19,800			19,800
	C-5	1	<5	30			30
	D-6	3		17	13	13	14
	D-8	3		71	56	51	59
	F-5	3		53	12	10	25
	F-8	3		24	14	17	18
	J-4	1	5	1,190	296		743
	J-5	3	5	289	260	238	262
	L-2	1	<5	22			22
	L-3	2	<5	28	31	42	34
	N-4	3	5	17	19	26	21
	N-5	2	5	35			35
	R-8	1		440	274	212	309
	V-17	2	<1	1,300	840		1,070
	AA-2	1	23	102			102
	AA-3	1	23		24		24
	AA-8	1	23	198			198
	AA-9	1	23	78			78
	EE-5	8	48	440			440
chloride	AA-2	1	24	63			63
	AA-3	1	24		42		42
	AA-8	1	24	1,300			1,300
	AA-9	1	24	780			780
	EE-5	8	<0.005	<0.3			<0.3
cobalt	AA-2	1	<0.050	0.050			0.050
	AA-3	1	<0.050		<0.050		<0.050
	AA-8	1	<0.050	<5.0			<5.0
	AA-9	1	<0.050	<5.0			<5.0
	EE-5	8	<0.010	<0.010			<0.010
dissolved solids	AA-2	1	530	472			472
	AA-3	1	530		450		450
	AA-8	1	530	100,000			100,000
	AA-9	1	530	61,200			61,200
	EE-5	8	28	2,400			2,400
fluoride	AA-2	1	0.17	1.8			1.8
	AA-3	1	0.17		1.9		1.9
	AA-8	1	0.17	3.7			3.7
	AA-9	1	0.17	0.24			0.24
	EE-5	7	0.67	0.32			0.32

Table V-78 (Continued)

SAMPLING DATA
ADDITIONAL WASTEWATER
RAW WASTEWATER

Pollutant	Stream Code	Sample Type	Source	Concentrations (mg/l) Day 1	Day 2	Day 3	Average
iron	AA-2	1	2.85	0.100			0.100
	AA-3	1	2.85		0.500		0.500
	AA-8	1	2.85	<5.0			<5.0
	AA-9	1	2.85	<5.0			<5.0
	EE-5	8	0.081	0.568			0.568
magnesium	AA-2	1	33.9	29.6			29.6
	AA-3	1	33.9		30.7		30.7
	AA-8	1	33.9	<10.0			<10.0
	AA-9	1	33.9	<10.0			<10.0
	EE-5	8	1.68	9.3			9.3
manganese	AA-2	1	<5.0	0.250			0.250
	AA-3	1	<5.0		0.250		0.250
	AA-8	1	<5.0	<5.0			<5.0
	AA-9	1	<5.0	<5.0			<5.0
	EE-5	8	0.016	0.244			0.244
molybdenum	AA-2	1	<0.050	<0.050			0.050
	AA-3	1	<0.050		<0.050		<0.050
	AA-8	1	<0.050	<5.0			<5.0
	AA-9	1	<0.050	<5.0			<5.0
	EE-5	8	0.030	<0.020			<0.020
phenols (total; by 4-AAP method)	B-9	3		0.108	0.092	0.142	0.114
	C-2	1		2.77			2.77
	C-5	1		0.005			0.005
	D-6	3		0.003	0.009	0.011	0.008
	D-8	1		0.006	0.003	0.024	0.011
	F-5	3		<0.001	0.001	0.006	<0.003
	F-8	3		0.005	0.002	0.003	0.003
	J-4	1		0.012	0.015	0.006	0.011
	J-5	1		0.001	0.005		0.003
	L-2	1		0.012			0.012
	L-3	2		0.114	0.099	0.102	0.105
	L-4			0.002			0.002
	N-4	1		0.015	0.012	0.012	0.013
	N-5	1		0.025			0.025
	R-8	1		0.062	0.034	0.010	0.035
	V-7	1	62.000	0.380	0.250		0.315
	AA-2	1	<0.005	0.014			0.014
	AA-3	1	<0.005		0.014		0.014
	AA-8	1	<0.005	0.012			0.012
	AA-9	1	<0.005	0.054			0.054

Table V-78 (Continued)

SAMPLING DATA
ADDITIONAL WASTEWATER
RAW WASTEWATER

Pollutant	Stream Code	Sample Type	Source	Concentrations (mg/l) Day 1	Day 2	Day 3	Average
phosphate	AA-2	1	<3	4.5			4.5
	AA-3	1	<3		<3		<3
	AA-8	1	<3	12			12
	AA-9	1	<3	10			10
	EE-5	8	8.8	1,000			1,000
sodium	AA-2	1	4.8	20.5			20.5
	AA-3	1	4.8		20.0		20.0
	AA-8	1	4.8	47,600			47,600
	AA-9	1	4.8	34,800			34,800
sulfate	AA-2	1	115	78			78
	AA-3	1	115		81		81
	AA-8	1	115	120			120
	AA-9	1	115	105			105
	EE-5	8	21	54			54
tin	AA-2	1	<0.050	<0.050			<0.050
	AA-3	1	<0.050		<0.050		<0.050
	AA-8	1	<0.050	<5.0			<5.0
	AA-9	1	<0.050	<5.0			<5.0
	EE-5	8	<0.020	<0.020			<0.020
titanium	AA-2	1	<0.050	<0.050			<0.050
	AA-3	1	<0.050		<0.050		<0.050
	AA-8	1	<0.050	<5.0			<5.0
	AA-9	1	<0.050	<5.0			<5.0
	EE-5	8	<0.010	<0.010			<0.010

Table V-78 (Continued)

SAMPLING DATA
ADDITIONAL WASTEWATER
RAW WASTEWATER

Pollutant	Stream Code	Sample Type	Source	Concentrations (mg/l) Day 1	Day 2	Day 3	Average
total organic carbon (TOC)	B-9	3	35	22	23	24	23
	C-2	1	<1	9,360			9,360
	C-5	1	<1	11			11
	D-6	3		8	20	7	12
	D-8	3		24	24	25	24
	F-4	1		2			2
	F-5	3		5	9	1	5
	F-8	3		9	4	3	5
	J-4	1		350	34		192
	J-5	3	<1	76	71	79	75
	L-2	1	2.8	5.9			5.9
	L-3	2	2.8	5.3	10	16	10
	L-4		2.8	2.40			2.40
	N-4	3	2.7	4.4	5.7	7.6	5.9
	N-5	2	2.7	16			16
	R-8	1		15	14	9.5	13
	V-7	2	4.7	900	250		580
	AA-2	1	<1	18			18
	AA-3	1	<1		15		15
	AA-8	1	<1	13			13
	AA-9	1	<1	19			19
	EE-5	8	<1	91			91
total solids	AA-2	1	590	496			496
	AA-3	1	590		580		580
	AA-8	1	590	108,000			108,000
	AA-9	1	590	74,000			74,000
	EE-5	8	30	2,600			2,600
vanadium	AA-2	1	<0.050	<0.050			<0.050
	AA-3	1	<0.050		<0.050		<0.050
	AA-8	1	<0.050	<5.0			<5.0
	AA-9	1	<0.050	<5.0			<5.0
	EE-5	8	<0.020	<0.020			<0.020
yttrium	AA-2	1	<0.050	<0.050			<0.050
	AA-3	1	<0.050		<0.050		<0.050
	AA-8	1	<0.050	<5.0			<5.0
	AA-9	1	<0.050	<5.0			<5.0
	EE-5	8	<0.020	<0.020			<0.020

Table V-78 (Continued)

SAMPLING DATA
ADDITIONAL WASTEWATER
RAW WASTEWATER

Pollutant	Stream Code	Sample Type	Source	Concentrations (mg/l) Day 1	Day 2	Day 3	Average
Conventional							
oil and grease	B-9	1		17	16	25	19
	C-2	1		6,060			6,060
	C-5	1		137			137
	D-6	1		13	13	7	11
	D-8	1		360	420	340	370
	F-4	1		8			8
	F-5	2		12	8	8	9
	F-8	1		24	15	7	15
	J-4	1		223	21		122
	J-5	1		182	40	35	86
	L-2	1		12			12
	L-3	1		<5	86	<5	<32
	L-4	1		74			74
	N-4	1	<5	10	<5	9	<8
	R-8	1		43	160	35	79
	V-7	1	16	440			440
	AA-2	1	<0.5	1.1			1.1
	AA-3	1	<0.5		8		8
	AA-8	1	<0.5	2.1			2.1
	AA-9	1	<0.5	13.1			13.1
	EE-5	8	3	40			40
suspended solids	B-9	3	138	16	18	13	16
	C-2	1	<1	2,612			2,612
	C-5	1	<1	8			8
	D-6	3		3	<1	4	<3
	D-8	3		17	17	20	18
	F-5	3		<1	5	5	<4
	F-8	3		<1	7	<1	<3
	J-4	1	14	1,540	2,670		2,110
	J-5	3	14	547	422	380	450
	L-2	1	<2	55			55
	N-4	3	<2	<2	3	4	<3
	R-8	1		470	410	360	410
	V-7	2		29	39		34
	AA-2	1	17	15			15
	AA-3	1	17		61		61
	AA-8	1	17	1,930			1,930
	AA-9	1	17	1,200			1,200
	EE-5	8	3	1.3			1.3

Table V-78 (Continued)

SAMPLING DATA
ADDITIONAL WASTEWATER
RAW WASTEWATER

Pollutant	Stream Code	Sample Type	Source	Concentrations (mg/l) Day 1	Day 2	Day 3	Average
pH (standard units)	B-9	1		7.64	8.1	7.86	
	C-2	1		6.9			
	C-5	1		8.2			
	D-6	1		8.0	8.0	11.2	
	D-8	1		7.4	8.0	7.6	
	F-4	1	7.55	7.5			
	F-5	1	7.55	7.5	7.3	7.48	
	F-8	1	7.55	7.6	7.7	7.4	
	J-4	1		6.2			
	J-5	1		3.6	1.5	3.4	
	L-2	1		7.7			
	L-3	1		7.1	7.4	7.4	
	N-4	1	7.1	7.4	7.1	7.0	
	N-5	1	7.1	7.2	7.2	7.3	
	R-8	1		7.5	8.0	8.4	
	AA-2	1	7.44	7.63			
	AA-3	1	7.44		7.33		
	AA-8	1	7.44	11.22			
	AA-9	1	7.44	11.70			
	EE-5	8	6.05	9.53			

(a), (b) Reported together.

Note: Only detected values are reported on this table. The additional wastewater streams sampled are B-9, C-2, C-5, D-6, D-8, F-4, F-5, F-8, J-4, J-5, L-2, L-3, L-4, N-4, N-5, R-8, V-7, AA-2, AA-3, AA-8, AA-9, and EE-5.

Table V-79

MISCELLANEOUS NONDESCRIPT WASTEWATER

Plant	Water Use l/kkg	Water Use gal/ton	Percent Recycle	Wastewater l/kkg	Wastewater gal/ton
1	*	*	0	3.7	0.89
2	*	*	0	60.6	14.5
3	*	*	0	70.8	17
4	*	*	0	353.8	84.9

*Data not available.

Statistical Summary

Minimum	3.7	0.89
Maximum	353.8	84.9
Mean	122	29
Median	65.7	15.8
Sample	4 of 4 plants	

Table V-80

SAMPLING DATA
PLANT B
TREATED WASTEWATER

Pollutant	Stream Code	Sample Type	Source	Concentrations (mg/l) Day 1	Day 2	Day 3	Average
Toxic Pollutants							
1. acenaphthene	B-7	2	ND	ND	ND	ND	
	B-8	2	ND	*	ND	ND	*
7. chlorobenzene	B-7	2	ND	ND	ND	ND	
	B-8	2	ND	0.033	ND	ND	0.033
15. 1,1,2,2-tetrachloroethane	B-7	2	ND	ND	ND	3.200	3.200
	B-8	2	ND	ND	ND	ND	
21. 2,4,6-trichlorophenol	B-7	2	*	ND	ND	1.500	1.500
	B-8	2	*	ND	ND	ND	
23. chloroform	B-7	2	*	0.017	*	1.700	0.572
	B-8	2	*	0.097	0.053	0.028	0.059
30. 1,2-trans-dichloroethylene	B-7	2	ND	0.840	0.570	0.280	0.563
	B-8	2	ND	2.300	0.480	0.110	0.963
34. 2,4-dimethlyphenol	B-7	2	ND	3.900	0.850	ND	2.375
	B-8	2	ND	3.200	1.100	ND	2.150
38. ethylbenzene	B-7	2	ND	<0.030	*	0.029	<0.020
	B-8	2	ND	0.026	*	0.021	0.016
44. methlyene chloride	B-7	2	<0.010	0.067	0.155	3.290	1.171
	B-8	2	<0.010	0.320	0.420	0.310	0.350
55. naphthalene	B-7	2	ND	ND	ND	ND	
	B-8	2	ND	0.110	0.033	0.056	0.066
59. 2,4-dinitrophenol	B-7	2	ND	ND	ND	ND	
	B-8	2	ND	ND	ND	18.000	18.000
65. phenol	B-7	2	<0.010	10.000	12.000	1.600	7.867
	B-8	2	<0.010	8.000	10.000	11.000	9.667
66. bis(2-ethylhexyl) phthalate	B-7	2	*	1.000	0.500	0.950	0.817
	B-8	2	*	0.022	*	ND	0.011
68. di-n-butyl phthalate	B-7	2	*	0.280	ND	ND	0.280
	B-8	2	*	0.012	0.012	0.015	0.013

Table V-80 (Continued)

SAMPLING DATA
PLANT B
TREATED WASTEWATER

	Pollutant	Stream Code	Sample Type	Source	Concentrations (mg/l) Day 1	Day 2	Day 3	Average
70.	diethyl phthalate	B-7	2	*	0.330	ND	ND	0.330
		B-8	2	*	0.011	0.015	ND	0.013
85.	tetrachloroethylene	B-7	2	ND	0.052	0.040	7.700	2.597
		B-8	2	ND	0.011	0.065	0.300	0.125
86.	toluene	B-7	2	ND	*	*	0.038	0.013
		B-8	2	ND	ND	*	*	*
87.	trichloroethylene	B-7	2	ND	0.021	0.064	ND	0.043
		B-8	2	ND	ND	0.042	ND	0.042
89.	aldrin	B-7	2	ND	**	**	0.010	**
		B-8	2	ND	ND	ND	ND	
93.	4,4'-DDE	B-7	2	**	0.006	ND	0.015	0.011
		B-8	2	**	**	ND	**	**
95.	alpha-endosulfan	B-7	2	ND	**	0.0055	**	**
		B-8	2	ND	ND	ND	ND	
97.	endosulfan sulfate	B-7	2	ND	ND	0.0065	0.0067	0.0066
		B-8	2	ND	ND	ND	ND	
99.	endrin aldehyde	B-7	2	ND	ND	**	0.0089	**
		B-8	2	ND	ND	ND	ND	
101.	heptachlor epoxide	B-7	2	**	0.015	ND	ND	0.015
		B-8	2	**	**	ND	ND	**
102.	alpha-BHC	B-7	2	ND	0.006	**	0.024	0.010
		B-8	2	ND	ND	**	**	**
103.	beta-BHC	B-7	2	**	ND	0.014	ND	0.014
		B-8	2	**	ND	ND	**	**
105.	delta-BHC	B-7	2	0.00001	0.015	ND	ND	0.015
		B-8	2	0.00001	**	ND	ND	**
106.	PCB-1242 (a)	B-7	2	**	0.200	0.085	0.039	0.108
107.	PCB-1254 (a)	B-8	2	**	**	**	**	**
108.	PCB-1221 (a)							

Table V-80 (Continued)

SAMPLING DATA
PLANT B
TREATED WASTEWATER

Pollutant	Stream Code	Sample Type	Source	Concentrations (mg/l) Day 1	Day 2	Day 3	Average
109. PCB-1232 (b)	B-7	2	**	0.250	0.160	0.660	0.357
110. PCB-1248 (b)	B-8	2	**	**	**	**	**
111. PCB-1260 (b)							
112. PCB-1016 (b)							
115. arsenic	B-7	2	<0.01	<0.01	<0.01	<0.01	<0.01
	B-8	2	<0.01	<0.01	<0.01	<0.01	<0.01
	B-10	1	<0.01	0.400			0.400
118. cadmium	B-8	2	ND	<0.002	<0.002	<0.002	<0.002
	B-10	1	ND	0.400			0.400
119. chromium	B-8	2	ND	0.100	0.100	<0.005	<0.068
	B-10	1	ND	70			70
120. copper	B-8	2	ND	0.01	<0.009	<0.009	<0.01
	B-10	1	ND	50			50
122. lead	B-8	2	ND	0.02	0.03	<0.02	<0.02
	B-10	1	ND	20			20
123. mercury	B-8	2	ND	0.003	0.001	0.0002	0.001
124. nickel	B-8	2	ND	<0.005	0.02	<0.005	<0.01
	B-10	1	ND	20			20
128. zinc	B-8	2	ND	<0.05	<0.05	<0.05	<0.05
	B-10	1	ND	50			50
Nonconventional							
chemical oxygen demand (COD)	B-7	2	82	7,980	5,850	78,320	30,720
	B-8	2	82	2,700	2,540	2,070	2,440
phenols (total; by 4-AAP method)	B-7	2		16.7	21.7	27.1	21.8
	B-8	2			17.5	13.5	15.5
total organic carbon (TOC)	B-7	2	35	4,960	4,050	26,270	11,760
	B-8	2	35	1,250	971	839	1,020

Table V-80 (Continued)

SAMPLING DATA
PLANT B
TREATED WASTEWATER

Pollutant	Stream Code	Sample Type	Source	Concentrations (mg/l) Day 1	Day 2	Day 3	Average
Conventional							
oil and grease	B-7	1		95	1,540	38,180	13,270
	B-8	1		22	52	267	114
suspended solids	B-7	2	138	1,262	791	5,676	2,576
	B-8	2	138	26	19	13	19
pH (standard units)	B-7	1		8.04	7.6	8.1	
	B-8	1		7.85	7.6	8.2	

(a), (b) Reported together.

Table V-81

SAMPLING DATA
PLANT C
TREATED WASTEWATER

Pollutant	Stream Code	Sample Type	Source	Concentrations (mg/l) Day 1	Day 2	Day 3	Average
Toxic Pollutants							
23. chloroform	C-9	1	0.055	0.066			0.066
44. methylene chloride	C-9	1	0.220	0.630			0.630
59. 2,4-dinitrophenol	C-9	1	ND	0.800			0.800
65. phenol	C-9	1	ND	0.820			0.820
66. bis(2-ethylhexyl) phthalate	C-9	1	*	0.130			0.130
102. alpha-BHC	C-9	1	**	0.00012			0.00012
106. PCB-1242 (a) 107. PCB-1254 (a) 108. PCB-1221 (a)	C-9	1	**	0.006			0.006
109. PCB-1232 (b) 110. PCB-1248 (b) 111. PCB-1260 (b) 112. PCB-1016 (b)	C-9	1	**	0.008			0.008
119. chromium	C-9	1	0.007	0.009			0.009
120. copper	C-9	1	0.02	0.02			0.02
123. mercury	C-9	1	0.0004	0.002			0.002
Nonconventional							
chemical oxygen demand (COD)	C-9	1	<5	2,520			2,520
phenols (total; by 4-AAP method)	C-9	1		1.65			1.65
total organic carbon (TOC)	C-9	1	<1	850			850
Conventional							
oil and grease	C-9	1		98			98
total suspended solids	C-9	1	<1	46			46

(a), (b) Reported together.

Table V-82

SAMPLING DATA
PLANT D
TREATED WASTEWATER

Pollutant	Stream Code	Sample Type	Source	Concentrations (mg/l) Day 1	Day 2	Day 3	Average
Toxic Pollutants							
1. acenaphthene	D-4	3	ND	*	ND	ND	*
	D-9[a]	6	ND	0.030			0.030
	D-14	3	ND	ND	ND	ND	
	D-15	6	ND	ND			
	D-16[b]	3	ND	ND	*	ND	*
4. benzene	D-4	1	ND	*	ND	ND	*
	D-9	1	ND	ND	ND	*	*
	D-14	1	ND	*	*	0.016	*
	D-15	1	ND	ND		*	*
	D-16	1	ND	ND	ND	*	*
21. 2,4,6-trichlorophenol	D-4	3	ND	ND	ND	ND	
	D-9	6	ND	0.014			0.014
	D-14	3	ND	*	*	*	*
	D-15	6	ND	ND			
	D-16	3	ND	ND	ND	*	*
23. chloroform	D-4	1	0.020	*	*	0.500	0.167
	D-9	1	0.020	*	0.011	*	0.004
	D-14	1	0.020	0.011	0.037	0.028	0.025
	D-15	1	0.020	0.012	0.015		0.014
	D-16	1	0.020	*	*	*	*
30. 1,2-trans-dichloroethylene	D-4	1	ND				
	D-9	1	ND	ND	ND	*	*
	D-14	1	ND	ND	*	*	*
	D-15	1	ND	ND	ND		
	D-16	1	ND	ND	ND	ND	
44. methylene chloride	D-4	1	*	*	*	0.450	0.150
	D-9	1	*	*	0.048	0.150	0.066
	D-14	1	*	ND	0.780	1.100	0.940
	D-15	1	*	0.150	0.110		0.130
	D-16	1	*	0.140	*	0.440	0.193
54. isophorone	D-4	3	ND	*	ND	ND	*
	D-9	6	ND	ND			
	D-14	3	ND	ND	ND	0.014	0.014
	D-15	6	ND	ND			
	D-16	3	ND	0.030	ND	ND	0.030

Table V-82 (Continued)

SAMPLING DATA
PLANT D
TREATED WASTEWATER

Pollutant	Stream Code	Sample Type	Source	Concentrations (mg/l) Day 1	Day 2	Day 3	Average
64. pentachlorophenol	D-4	3	0.014	ND	*	*	*
	D-9	6	0.014	0.013			0.013
	D-14	3	0.014	*	*	ND	*
	D-15	6	0.014	ND			
	D-16	3	0.014	ND	*	ND	*
65. phenol	D-4	3	ND	0.042	0.027	*	0.023
	D-9	6	ND	ND			
	D-14	3	ND	*	*	*	*
	D-15	6	ND	ND			
	D-16	3	ND	0.040	*	0.015	0.018
66. bis(2-ethylhexyl) phthalate	D-4	3	*	0.023	*	*	*
	D-9	6	*	0.057			0.057
	D-14	3	*	*	*	*	*
	D-15	6	*	0.130			0.130
	D-16	3	*	0.150	0.010	*	0.053
67. butyl benzyl phthalate	D-4	3	ND	*	ND	*	*
	D-9	6	ND	ND			
	D-14	3	ND	*	*	*	*
	D-15	6	ND	0.049			0.049
	D-16	3	ND	0.270	*	*	0.090
68. di-n-butyl phthalate	D-4	3	*	0.017	*	*	*
	D-9	6	*	ND			
	D-14	3	*	*	*	*	*
	D-15	6	*	0.022			0.022
	D-16	3	*	0.016	*	*	*
69. di-n-octyl phthalate	D-4	3	ND	ND	ND	ND	
	D-9	6	ND	ND			
	D-14	3	ND	ND	ND	ND	
	D-15	6	ND	0.026			0.026
	D-16	3	ND	0.140	ND	ND	0.140
71. dimethyl phthalate	D-4	3	ND	ND	*	*	*
	D-9	6	ND	ND			
	D-14	3	ND	0.026	0.043	*	0.023
	D-15	6	ND	ND			
	D-16	3	ND	*	*	*	*

Table V-82 (Continued)

SAMPLING DATA
PLANT D
TREATED WASTEWATER

	Pollutant	Stream Code	Sample Type	Source	Concentrations (mg/l) Day 1	Day 2	Day 3	Average
87.	trichloroethylene	D-4	1	*	0.024	0.073	0.053	0.050
		D-9	1	*	ND			
		D-14	1	*	0.025	0.039	0.033	0.032
		D-15	1	*	0.150	*		0.075
		D-16	1	*	0.080	0.045	0.020	0.048
115.	arsenic	D-4	3	<0.010	<0.001	<0.001	<0.001	<0.001
		D-9	6	<0.010	0.040			0.040
		D-13*	1	<0.010	0.750			0.750
		D-14	3	<0.010	<0.010	<0.010	<0.010	<0.010
		D-15	6	<0.010	ND			
		D-16	3	<0.010	<0.010	<0.010	<0.010	<0.010
119.	chromium	D-4	3	<0.005	1.000	0.800	1.000	0.933
		D-9	6	<0.005	ND			
		D-13*	1	<0.005	ND			
		D-14	3	<0.005		0.020	0.040	0.030
		D-15	6	<0.005	ND			
		D-16	3	<0.005	2.000	0.700	2.000	1.567
120.	copper	D-4	3	<0.009	0.010	0.010	0.010	0.010
		D-9	6	<0.009	ND			
		D-13*	1	<0.009	ND			
		D-14	3	<0.009		<0.009	0.010	<0.010
		D-15	6	<0.009	ND			
		D-16	3	<0.009	0.020	0.010	0.010	0.013
121.	cyanide	D-4	1	ND	0.005	0.001	0.001	0.002
		D-9	6	ND	0.006			0.006
		D-13*	1	ND	0.004			0.004
		D-14	1	ND	0.015	<0.001	0.029	<0.015
		D-15	6	ND	0.002			0.002
		D-16	1	ND	0.004	0.002	0.001	0.002
122.	lead	D-4	3	<0.020	<0.020	<0.020	0.040	<0.027
		D-9	6	<0.020	ND			
		D-13*	1	<0.020				
		D-14	3	<0.020		<0.020	<0.020	<0.020
		D-15	6	<0.020	ND			
		D-16	3	<0.020	0.030	<0.020	0.020	<0.023

Table V-82 (Continued)

SAMPLING DATA
PLANT D
TREATED WASTEWATER

Pollutant	Stream Code	Sample Type	Source	Concentrations (mg/l) Day 1	Day 2	Day 3	Average
123. mercury	D-4	3	0.0006	0.0006	<0.010	0.0003	0.004
	D-9	6	0.0006	ND			
	D-13*	1	0.0006	ND			
	D-14	3	0.0006		<0.0001	<0.0007	<0.0004
	D-15	6	0.0006	ND			
	D-16	3	0.0006	0.060	<0.0001	0.0005	0.020
128. zinc	D-4	3	<0.050	0.090	0.060	0.060	0.070
	D-9	6	<0.050	ND			
	D-13*	1	<0.050	ND			
	D-14	3	<0.050		<0.050	<0.050	<0.050
	D-15	1	<0.050	ND			
	D-16	3	<0.050	0.100	<0.050	0.070	<0.073
Nonconventional							
alkalinity	D-15	6		0.380			0.380
aluminum	D-4	3	0.200	4.0	2.0	2.0	2.7
	D-9	6	0.200	170.0			170.0
	D-13*	1	0.200	ND			
	D-14	3	0.200		0.100	<0.090	<0.095
	D-15	6	0.200	8.3			8.3
	D-16	3	0.200	6.0	4.0	4.0	4.7
calcium	D-4	3	38	53.0	56.0	56.0	55.0
	D-9	6	38	7.3			7.3
	D-14	3	38	*	52.0	46.0	32.7
	D-15	6	38	50.0			50.0
	D-16	3	38	64.0	110.0	89.0	87.7
chemical oxygen demand (COD)	D-4	3		73	44	52	56
	D-9	6		59			59
	D-14	3		32	22	28	27
	D-15	6		903			903
	D-16	3		79	90	86	85
magnesium	D-4	3	12	16.0	14.0	14.0	14.7
	D-9	6	12	21.0			21.0
	D-14	3	12	13.0	13.0	13.0	13.0
	D-15	6	12	32.0			32.0
	D-16	3	12	24.0	59.0	37.0	40.0

Table V-82 (Continued)

SAMPLING DATA
PLANT D
TREATED WASTEWATER

Pollutant	Stream Code	Sample Type	Source	Concentrations (mg/l) Day 1	Day 2	Day 3	Average
phenols (total; by 4-AAP method)	D-4	1		0.414	0.072	0.110	0.199
	D-9	6		<0.001			<0.001
	D-14	1		0.547	0.001	0.477	0.347
	D-15	6		15.6			15.6
	D-16	1		0.015	1.34	0.01	0.46
sulfate	D-9	6		3.366			3.366
	D-15	6		1.284			1.284
total organic carbon (TOC)	D-4	3		29	4	21	18
	D-9	6		31			31
	D-14	3		12	3	17	11
	D-15	6		381			381
	D-16	3		36	66	48	50
Conventional							
oil and grease	D-4	1		15	21	5	14
	D-9	1		16			16
	D-14	1		14	10	7	10
	D-15	1		36			36
	D-16	1		66	72	54	64
suspended solids	D-4	3		43	44	51	46
	D-9	6		13			13
	D-14	3		3	<1	12	<5
	D-15	6		93			93
	D-16	3		119	1,100	215	478
pH (standard units)	D-4	3		6.8	8.4	8.2	
	D-9	6		2.1	2.4	2.8	
	D-14	3		7.2	7.8	7.1	
	D-15	6		6.7	6.5		
	D-16	3		5.9	7.4	7.8	

*Stream D-13 was analyzed for metals only.

[a]Raw waste is from nonscope operations.

[b]Influent to central treatment system stream--some contributing streams are partially treated.

Table V-83

SAMPLING DATA
PLANT E
TREATED WASTEWATER

Pollutant	Stream Code	Sample Type	Source	Concentrations (mg/l) Day 1	Day 2	Day 3	Average
Toxic Pollutants							
1. acenaphthene	E-6[a]	3	*	ND	ND	ND	
	E-8	2	*	0.055			0.055
	E-9	2	*	*			*
	E-10	3	*	0.025	ND	ND	0.025
	E-11	3	*	ND	ND	ND	
4. benzene	E-6	1	ND	ND	0.011	*	*
	E-8	1	ND	*			*
	E-9	1	ND	*			*
	E-10	1	ND	ND	0.011	*	*
	E-11	1	ND	ND	*	ND	*
5. benzidine	E-6	3	ND	ND	ND	ND	
	E-8	2	ND	ND			
	E-9	2	ND	ND			
	E-10	3	ND	ND	0.026	0.016	0.021
	E-11	3	ND	ND	0.016	0.033	0.025
7. chlorobenzene	E-6	3	ND	ND	ND	ND	
	E-8	2	ND	*			*
	E-9	2	ND	ND			
	E-10	3	ND	ND	ND	ND	
	E-11	3	ND	ND	*	*	*
13. 1,1-dichloroethane	E-6	3	ND	ND	ND	ND	
	E-8	2	ND	0.058			0.058
	E-9	2	ND	0.020			0.020
	E-10	3	ND	ND	ND	ND	
	E-11	3	ND	ND	ND	ND	
21. 2,4,6-trichlorophenol	E-6	3	*	ND	*	ND	*
	E-8	2	*	ND			
	E-9	2	*	ND			
	E-10	3	*	0.013	*	*	*
	E-11	3	*	ND	*	ND	*
22. p-chloro-m-cresol	E-6	3	ND	ND	*	ND	*
	E-8	2	ND	ND			
	E-9	2	ND	ND			
	E-10	3	ND	*	ND	*	*
	E-11	3	ND	0.013	*	ND	*

Table V-83 (Continued)

SAMPLING DATA
PLANT E
TREATED WASTEWATER

Pollutant	Stream Code	Sample Type	Source	Concentrations (mg/l) Day 1	Day 2	Day 3	Average
23. chloroform	E-6	1	*	*	*	*	*
	E-8	1	*	0.032			0.032
	E-9	1	*	0.020			0.020
	E-10	1	*	0.035	0.023	0.045	0.034
	E-11	1	*	0.012	*	*	*
30. 1,2-trans-dichloroethylene	E-6	3	ND	ND	ND	ND	
	E-8	2	ND	0.850			0.850
	E-9	2	ND	0.360			0.360
	E-10	3	ND	ND	ND	ND	
	E-11	3	ND	ND	ND	ND	
35. 2,4-dinitrotoluene	E-6	3	ND	ND	ND	ND	
	E-8	2	ND	ND			
	E-9	2	ND	ND			
	E-10	3	ND	ND	0.021	ND	0.021
	E-11	3	ND	ND	ND	0.060	0.060
36. 2,6-dinitrotoluene	E-6	3	ND	ND	ND	ND	
	E-8	2	ND	ND			
	E-9	2	ND	ND			
	E-10	3	ND	ND	0.044	ND	0.044
	E-11	3	ND	ND	ND	*	*
38. ethylbenzene	E-6	1	ND	ND	ND	ND	
	E-8	1	ND	0.013			0.013
	E-9	1	ND	*			*
	E-10	1	ND	ND	ND	ND	
	E-11	1	ND	*	ND	ND	*
44. methylene chloride	E-6	1	0.017	*	0.140	0.130	0.090
	E-8	1	0.017	0.130			0.130
	E-9	1	0.017	1.700			1.700
	E-10	1	0.017	0.052	0.474	0.130	0.219
	E-11	2	0.017	0.089	0.076	0.100	0.088
54. isophorone	E-6	3	ND	ND	ND	ND	
	E-8	2	ND	ND			
	E-9	2	ND	0.280			0.280
	E-10	3	ND	ND	0.170	ND	0.170
	E-11	3	ND	ND	ND	0.222	0.222

Table V-83 (Continued)

SAMPLING DATA
PLANT E
TREATED WASTEWATER

Pollutant	Stream Code	Sample Type	Source	Concentrations (mg/l) Day 1	Day 2	Day 3	Average
55. naphthalene	E-6	3	ND	ND	*	ND	*
	E-8	2	ND	0.017			0.017
	E-9	2	ND	ND			
	E-10	3	ND	ND	ND	ND	
	E-11	3	ND	ND	ND	*	*
56. nitrobenzene	E-6	3	ND	ND	ND	ND	
	E-8	2	ND	ND			
	E-9	2	ND	ND			
	E-10	3	ND	ND	0.025	ND	0.025
	E-11	3	ND	ND	ND	ND	
59. 2,4-dinitrophenol	E-6	3	ND	ND	ND	ND	
	E-8	2	ND	ND			
	E-9	2	ND	ND			
	E-10	3	ND	0.032	ND	*	0.016
	E-11	3	ND	0.011	*	ND	0.006
62. N-nitrosodiphenylamine	E-6	3	ND	ND	ND	ND	
	E-8	2	ND	ND			
	E-9	2	ND	ND			
	E-10	3	ND	ND	0.083	ND	0.083
	E-11	3	ND	ND	ND	0.091	0.091
65. phenol	E-6	3	*	ND	ND	*	*
	E-8	2	*	ND			
	E-9	2	*	ND			
	E-10	3	*	*	ND	*	*
	E-11	3	*	ND	*	ND	*
66. bis(2-ethylhexyl) phthalate	E-6	3	*	*	*	0.019	0.006
	E-8	2	*	0.390			0.390
	E-9	2	*	0.044			0.044
	E-10	3	*	0.056	ND	0.013	0.035
	E-11	3	*	*	*	ND	*
68. di-n-butyl phthalate	E-6	3	*	*	ND	ND	*
	E-8	2	*	0.390			0.390
	E-9	2	*	0.049			0.049
	E-10	3	*	ND	*	ND	*
	E-11	3	*	0.019	*	*	0.006

Table V-83 (Continued)

SAMPLING DATA
PLANT E
TREATED WASTEWATER

Pollutant	Stream Code	Sample Type	Source	Concentrations (mg/l) Day 1	Day 2	Day 3	Average
70. diethyl phthalate	E-6	3	*	*	0.023	ND	0.012
	E-8	2	*	0.720			0.720
	E-9	2	*	0.065			0.065
	E-10	3	*	0.056	ND	ND	0.056
	E-11	3	*	ND	ND	ND	
71. dimethyl phthalate	E-6	3	*	ND	ND	ND	
	E-8	2	*	ND			
	E-9	2	*	ND			
	E-10	3	*	ND	*	ND	*
	E-11	3	*	ND	ND	ND	
72. benzo(a)anthracene	E-6	3	*	ND	ND	ND	
	E-8	2	*	ND			
	E-9	2	*	ND			
	E-10	3	*	ND	*	ND	*
	E-11	3	*	ND	ND	0.011	0.011
78. anthracene (a)	E-6	3	ND	ND	ND	ND	
81. phenanthrene (a)	E-8	2	ND	ND			
	E-9	2	ND	ND			
	E-10	3	ND	ND	0.119	ND	0.119
	E-11	3	ND	ND	*	0.100	0.050
80. fluorene	E-6	3	*	ND	*	ND	*
	E-8	2	*	ND			
	E-9	2	*	ND			
	E-10	3	*	ND	0.050	ND	0.050
	E-11	3	*	ND	ND	0.035	0.035
84. pyrene	E-6	3	ND	ND	*	ND	*
	E-8	2	ND	ND			
	E-9	2	ND	ND			
	E-10	3	ND	ND	ND	ND	
	E-11	3	ND	ND	*	*	*
85. tetrachloroethylene	E-6	1	ND	ND	*	ND	*
	E-8	1	ND	0.021			0.021
	E-9	1	ND	0.014			0.014
	E-10	1	ND	*	*	*	*
	E-11	1	ND	0.011	*	*	0.004

Table V-83 (Continued)

SAMPLING DATA
PLANT E
TREATED WASTEWATER

	Pollutant	Stream Code	Sample Type	Source	Concentrations (mg/l) Day 1	Day 2	Day 3	Average
86.	toluene	E-6	1	ND	ND	ND	ND	
		E-8	1	ND	0.013			0.013
		E-9	1	ND	*			*
		E-10	1	ND	0.031	*	ND	0.016
		E-11	1	ND	*	ND	ND	*
87.	trichloroethylene	E-6	3	ND	ND	ND	ND	
		E-8	2	ND	0.012			0.012
		E-9	2	ND	*			*
		E-10	3	ND	ND	*	*	*
		E-11	3	ND	ND	*	*	*
91.	chlordane	E-6	3	**	**			**
		E-8	2	**	ND			
		E-9	2	**	**			**
		E-10	3	**	**			**
		E-11	3	**	**			**
98.	endrin	E-6	3	ND	ND			
		E-8	2	ND	**			**
		E-9	2	ND	ND			
		E-10	3	ND	**			**
		E-11	3	ND	**			**
106.	PCB-1242 (b)	E-6	3	**	**			**
107.	PCB-1254 (b)	E-8	2	**	0.016			0.016
108.	PCB-1221 (b)	E-9	2	**	**			**
		E-10	3	**	0.006			0.006
		E-11	3	**	**			**
109.	PCB-1232 (c)	E-6	3	**	**			**
110.	PCB-1248 (c)	E-8	2	**	0.027			0.027
111.	PCB-1260 (c)	E-9	2	**	**			**
112.	PCB-1016 (c)	E-10	3	**	0.0053			0.0053
		E-11	3	**	**			**
118.	cadmium	E-6	3	<0.002	<0.002	<0.002	<0.002	<0.002
		E-8	2	<0.002	<0.002			<0.002
		E-9	2	<0.002	0.005			0.005
		E-10	3	<0.002	<0.002	<0.002	<0.002	<0.002
		E-11	3	<0.002	<0.002	<0.002	<0.002	<0.002

Table V-83 (Continued)

SAMPLING DATA
PLANT E
TREATED WASTEWATER

Pollutant	Stream Code	Sample Type	Source	Concentrations (mg/l) Day 1	Day 2	Day 3	Average
119. chromium	E-6	3	<0.005	0.070	0.060	0.040	0.057
	E-8	2	<0.005	0.010			0.010
	E-9	2	<0.005	0.020			0.020
	E-10	3	<0.005	0.090	0.060	0.020	0.057
	E-11	3	<0.005	<0.005	<0.005	<0.005	<0.005
120. copper	E-6	3	0.009	<0.009	<0.009	<0.009	<0.009
	E-8	2	0.009	0.050			0.050
	E-9	2	0.009	<0.009			<0.009
	E-10	3	0.009	0.200	0.300	0.060	0.187
	E-11	3	0.009	<0.009	0.100	<0.009	<0.039
121. cyanide	E-6	1	ND	0.002	<0.001	<0.001	<0.001
	E-8	2	ND	0.006			0.006
	E-9	2	ND	0.003			0.003
	E-10	1	ND	0.034	0.006	0.006	0.015
	E-11	1	ND	0.004	0.003	0.003	0.003
122. lead	E-6	3	<0.020	<0.020	<0.020	<0.020	<0.020
	E-8	2	<0.020	0.050			0.050
	E-9	2	<0.020	0.030			0.030
	E-10	3	<0.020	0.020	<0.020	<0.020	<0.020
	E-11	3	<0.020	<0.020	<0.020	<0.020	<0.020
123. mercury	E-6	3	0.0004	0.0009	0.0004	0.0011	0.0008
	E-8	2	0.0004	<0.010			<0.010
	E-9	2	0.0004	0.0006			0.0006
	E-10	3	0.0004	0.0006	0.0022	0.0005	0.0011
	E-11	3	0.0004	0.0006	0.0008	0.0006	0.0007
124. nickel	E-6	3	<0.005	0.020	0.006	<0.005	<0.010
	E-8	2	<0.005	0.010			0.010
	E-9	2	<0.005	0.040			0.040
	E-10	3	<0.005	<0.005	<0.005	<0.005	<0.005
	E-11	3	<0.005	<0.005	<0.005	<0.005	<0.005
128. zinc	E-6	3	<0.050	<0.050	<0.050	<0.050	<0.050
	E-8	2	<0.050	0.100			0.100
	E-9	2	<0.050	0.200			0.200
	E-10	3	<0.050	0.200	0.200	0.100	0.167
	E-11	3	<0.050	<0.050	<0.050	<0.050	<0.050

Table V-83 (Continued)

SAMPLING DATA
PLANT E
TREATED WASTEWATER

Pollutant	Stream Code	Sample Type	Source	Concentrations (mg/l) Day 1	Day 2	Day 3	Average
Nonconventional							
alkalinity	E-6	3	ND	26	28	76	43
	E-8	2	ND	240.0			240.0
	E-9	2	ND	12.0			12.0
	E-10	3	ND	ND	ND	ND	
	E-11	3	ND	ND	ND	ND	
aluminum	E-6	3	<0.090	<0.145	<0.195	<0.195	<0.178
	E-8	2	<0.090	4.7			4.7
	E-9	2	<0.090	7.6			7.6
	E-10	3	<0.090	20	10	6	12
	E-11	3	<0.090	0.100	<0.090	<0.090	<0.093
calcium	E-6	3	68	320.0	370.0	320.0	336.7
	E-8	2	68	28.0			28.0
	E-9	2	68	43.0			43.0
	E-10	3	68	50	48	47	48
	E-11	3	68	51	51	50	51
chemical oxygen demand (COD)	E-6	3	<0.005	68	17	22	36
	E-8	2	<0.005	9,890			9,890
	E-9	2	<0.005	828			828
	E-10	3	<0.005	270	346	395	337
	E-11	3	<0.005	84	103	93	93
magnesium	E-6	3	3.8	22.0	23.0	18.0	21.0
	E-8	2	3.8	9.7			9.7
	E-9	2	3.8	14.0			14.0
	E-10	3	3.8	5.8	6.1	4.9	5.6
	E-11	3	3.8	5.2	5.4	5.4	5.3
phenols (total; by 4-AAP method)	E-6	1		0.008	0.007	0.010	0.008
	E-8	2		0.217			0.217
	E-9	2		0.213			0.213
	E-10	1		0.009		0.006	0.008
	E-11	1		0.011		0.008	0.010

Table V-83 (Continued)

SAMPLING DATA
PLANT E
TREATED WASTEWATER

Pollutant	Stream Code	Sample Type	Source	Concentrations (mg/l) Day 1	Day 2	Day 3	Average
sulfate	E-6	3	ND	790	848	788	809
	E-8	2	ND	<0.025			<0.025
	E-9	2	ND				
	E-10	3	ND	ND	ND	ND	
	E-11	3	ND	ND	ND	ND	
total organic carbon (TOC)	E-6	3	0.001	22	8	7	12
	E-8	2	0.001	3,130			3,130
	E-9	2	0.001	262			262
	E-10	3	0.001	166	180	152	166
	E-11	3	0.001	27	34	27	29
Conventional							
oil and grease	E-6	1		9	20	18	16
	E-8	1		3,320			3,320
	E-9	1		42			42
	E-10	1		189	227		208
	E-11	1		35	31	15	27
suspended solids	E-6	3	<0.001	10	1	1	4
	E-8	2	<0.001	137.0			137.0
	E-9	2	<0.001	12			12
	E-10	3	<0.001	121	140	89	117
	E-11	3	<0.001	24	24	24	24
pH (standard units)	E-6	1		6.7	7.5	7.0	
	E-8	1		5.5			
	E-9	1		4.8			
	E-10	1			6.2	6.5	
	E-11	1			7.0	7.3	

(a), (b), (c) Reported together.

[a]Raw waste is from nonscope operations.

Table V-84

SAMPLING DATA
PLANT H
TREATED WASTEWATER

Pollutant	Stream Code	Sample Type	Source	Concentrations (mg/l) Day 1	Day 2	Day 3	Average
Toxic Pollutants							
4. benzene	H-3	1	0.023	*	ND	*	*
23. chloroform	H-3	1	0.066	0.023	0.028	0.017	0.023
44. methylene chloride	H-3	1	1.100	0.205	0.031	0.034	0.090
66. bis(2-ethylhexyl) phthalate	H-3	3	ND	*	ND	ND	*
68. di-n-butyl phthalate	H-3	3	*	0.011	0.022	*	0.011
85. tetrachloroethylene	H-3	1	*	*	*	*	*
86. toluene	H-3	1	*	*	ND	ND	*
93. 4,4'-DDE	H-3	3	ND	**			**
106. PCB-1242 (a) 107. PCB-1254 (a) 108. PB-1221 (a)	H-3	3	**	**			**
109. PCB-1232 (b) 110. PCB-1248 (b) 111. PCB-1260 (b) 112. PCB-1016 (b)	H-3	3	**	**			**
121. cyanide	H-3	1		0.025	0.005	0.011	0.014
122. lead	H-3	3	<0.02	0.07	0.05	0.03	0.05
123. mercury	H-3	3	0.0004	0.0003	0.0003	0.0003	0.0003
128. zinc	H-3	3	0.1	0.2	0.2	0.1	0.2
Nonconventional							
chemical oxygen demand (COD)	H-3	3		222	179	96	166
phenols (total; by 4-AAP method)	H-3	1		0.014	0.01	0.017	0.01
total organic carbon (TOC)	H-3	3		47	44	25	39

Table V-84 (Continued)

SAMPLING DATA
PLANT H
TREATED WASTEWATER

Pollutant	Stream Code	Sample Type	Source	Concentrations (mg/l) Day 1	Day 2	Day 3	Average
Conventional							
oil and grease	H-3	1		131	59	168	119
	H-7[a]	1		69			69
	H-8[a]	1		154			154
suspended solids	H-3	3		54	72	38	55
pH (standard units)	H-3	1		7.4	7		
	H-7	1		7.3			
	H-8	1		7.3			

(a), (b) Reported together.

[a]Oil samples analyzed for oil and grease only.

Table V-85

SAMPLING DATA
PLANT J
TREATED WASTEWATER

Pollutant	Stream Code	Sample Type	Source	Concentrations (mg/l) Day 1	Day 2	Day 3	Average
Toxic Pollutants							
44. methylene chloride	J-6	1	ND	*	0.021		0.011
58. 4-nitrophenol	J-6	1	ND	0.045	ND	0.018	0.032
66. bis(2-ethylhexyl) phthalate	J-6	1	ND	0.140	0.160	0.024	0.108
68. di-n-butyl phthalate	J-6	1	0.041	0.031	0.018	ND	0.025
69. di-n-octyl phthalate	J-6	1	ND	0.019	0.016	ND	0.018
78. anthracene (a) 81. phenanthrene (a)	J-6	1	ND	*	ND	ND	*
87. trichloroethylene	J-6	1	ND	*	*		*
115. arsenic	J-6	1	<0.010	<0.010	<0.010	0.010	<0.010
118. cadmium	J-6	1	<0.010	0.180	0.190	0.190	0.187
119. chromium	J-6	1	<0.030	870	735	770	792
120. copper	J-6	1	0.030	2,000	2,530	2,190	2,240
121. cyanide	J-6	1	ND	0.018	0.034	0.023	0.025
122. lead	J-6	1	<0.050	0.650	1.200	1.200	1.017
123. mercury	J-6	1	<0.0004	<0.0002	0.0002	<0.0002	<0.0002
124. nickel	J-6	1	<0.020	2.100	2.500	2.600	2.400
128. zinc	J-6	1	0.040	1,950	1,200	2,200	1,780
Nonconventional							
chemical oxygen demand (COD)	J-6	1	5	297	289	255	280
phenols (total; by 4-AAP method)	J-6	1		0.001	0.004	0.002	0.002
total organic carbon (TOC)	J-6	1	<1	77	66	79	74

Table V-85 (Continued)

SAMPLING DATA
PLANT J
TREATED WASTEWATER

Pollutant	Stream Code	Sample Type	Source	Concentrations (mg/l) Day 1	Day 2	Day 3	Average
Conventional							
150. oil and grease	J-6	1		18	15	13	15
152. suspended solids	J-6	1	14	354	1,070	704	709
159. pH (standard units)	J-6	1		3.6	3.5	4.1	

(a) Reported together.

Table V-86

SAMPLING DATA
PLANT K
TREATED WASTEWATER

Pollutant	Stream Code	Sample Type	Source	Concentrations (mg/l) Day 1	Day 2	Day 3	Average
Toxic Pollutants							
4. benzene	K-4	1	0.019	*	0.051	*	0.017
	K-5	1	0.029	*	0.015	*	0.005
23. chloroform	K-4	1	0.045	0.018	0.037	0.043	0.033
	K-5	1	0.045	0.024	0.021	0.035	0.027
44. methylene chloride	K-4	1	1.300	0.650	0.860	1.400	0.970
	K-5	1	1.300	0.970	1.800	0.360	1.040
48. dichlorobromomethane	K-4	1	0.016	0.011	*	*	0.004
	K-5	1	0.016	*	*	*	*
55. naphthalene	K-4	3		0.016			0.016
	K-5	3,2,2		0.015	*		0.008
65. phenol	K-4	3		0.013			0.013
	K-5	3,2,2		*	*		*
66. bis(2-ethylhexyl) phthalate	K-4	3		*	*	0.041	0.014
	K-5	3,2,2		0.035	*	*	0.012
71. dimethyl phthalate	K-4	3		*		*	*
	K-5	3,2,2		*	0.011	*	0.004
119. chromium	K-4	3	<0.03	0.920		1.400	1.160
	K-5	2	<0.03		0.120	0.050	0.085
120. copper	K-4	3	<0.02	0.120		0.090	0.105
	K-5	2	<0.02		<0.020	<0.020	<0.020
124. nickel	K-4	3	<0.020	<0.020		<0.020	<0.020
	K-5	2	<0.020		0.020	<0.020	<0.020
128. zinc	K-4	3	<0.02	0.110		0.060	0.085
	K-5	2	<0.02		<0.020	0.020	<0.020

Table V-86 (Continued)

SAMPLING DATA
PLANT K
TREATED WASTEWATER

Pollutant	Stream Code	Sample Type	Source	Concentrations (mg/l) Day 1	Day 2	Day 3	Average
Nonconventional							
alkalinity	K-4	3	0.096	118.0		76.0	97.0
	K-5	2	0.096	120.0	107.0	81.0	102.7
aluminum	K-4	3	<0.10	34.0		57.0	45.5
	K-5	2	<0.10	13.0	12.0	15.0	13.3
calcium	K-4	3					
	K-5	2		22.0	24.0	29.0	25.0
chemical oxygen demand (COD)	K-4	3	5	52		61	57
	K-5	2	5		22	22	22
dissolved solids	K-4	3	0.164	674.0		742.0	708.0
	K-5	2	0.164	760.0	737.0	677.0	724.7
magnesium	K-4	3					
	K-5	2		6.00	6.20	6.60	6.27
phenols (total; by 4-AAP method)	K-4	1		0.004	0.006	0.008	0.006
	K-5	1		0.012	0.016	0.011	0.013
sulfate	K-4	3	<0.010	15.0		21.0	18.0
	K-5	2	<0.010	70.0	64.0	52.0	62.0
total organic carbon (TOC)	K-4	3	6	24		20	22
	K-5	2	6	11	13	9	11
Conventional							
oil and grease	K-4	1	3	8	8	3	6
	K-5	1	3	18	7	8	11
suspended solids	K-4	3	13	150		181	166
	K-5	2	13		11	10	11
pH (standard units)	K-4	1		8.6	5.7	6.7	
	K-5	1		9.3	7.0	7.3	

Table V-87

SAMPLING DATA
PLANT L
TREATED WASTEWATER

Pollutant	Stream Code	Sample Type	Source	Concentrations (mg/l) Day 1	Day 2	Day 3	Average
Toxic Pollutants							
44. methylene chloride	L-8	1	ND	0.090	ND	0.090	0.090
55. naphthalene	L-7[a]	1		ND			
	L-8	1		*	0.050	*	0.017
66. bis(2-ethylhexyl) phthalate	L-7[a]	1	ND	<5.000			<5.000
	L-8	1	ND	*	ND	ND	*
68. di-n-butyl phthalate	L-7[a]	1		<5.000			<5.000
	L-8	1		ND	ND	ND	
70. diethyl phthalate	L-7[a]	1		<5.000			<5.000
	L-8	1		ND	ND	ND	
71. dimethyl phthalate	L-7[a]	1		<5.000			<5.000
	L-8	1		ND	ND	ND	
119. chromium	L-8	1	<0.001	0.110	0.090	0.080	0.093
123. mercury	L-8	1	0.0073	0.0022	0.014	<0.0001	<0.005
Nonconventional							
aluminum	L-8	1	<0.5	0.77	5.8	2.4	3.0
calcium	L-8	1	9.0	120	221	104	148
chemical oxygen demand (COD)	L-8	1	<5	37	28	24	30
magnesium	L-8	1	2.24	8.23	0.34	4.56	4.38
phenols (total; by 4-AAP method)	L-8	1		0.017	0.004	0.005	0.009
total organic carbon (TOC)	L-8	1	2.8	6.1	12	11	10
Conventional							
oil and grease	L-8	1		<5	<5	276	<95
suspended solids	L-8	1	<2	<2	<2	11	<5
pH (standard units)	L-8	1		7.9	11.4	10.1	

[a]Stream L-7 was not analyzed for volatile organics and metals. Sludge sample.

Table V-88

SAMPLING DATA
PLANT P
TREATED WASTEWATER

Pollutant	Stream Code	Sample Type	Source	Concentrations (mg/l) Day 1	Day 2	Day 3	Average
Toxic Pollutants							
44. methylene chloride	P-7	1	*	0.310	0.070	0.260	0.213
55. naphthalene	P-7	1	ND	0.380	0.230	0.020	0.210
57. 2-nitrophenol	P-7	1	ND	0.100	0.150	0.020	0.090
	P-8	1	ND	ND			
62. N-nitrosodiphenylamine	P-7	1	ND	0.110	0.030	ND	0.070
	P-8	1	ND	ND			
65. phenol	P-7	1	ND	0.020	0.020	0.090	0.043
	P-8	1	ND	ND			
66. bis(2-ethylhexyl) phthalate	P-7	1	*	0.100	ND	ND	0.100
	P-8	1	*	45.500			45.500
78. anthracene (a)	P-7	1	ND	*	ND	ND	*
81. phenanthrene (a)	P-8	1	ND	<41.000			<41.000
85. tetrachloroethylene	P-7	1	ND	*	0.230	0.070	0.103
	P-8	1	ND	ND			
86. toluene	P-7	1	ND	0.020	0.030	*	0.020
	P-8	1	ND	ND			
115. arsenic	P-7	1	0.0011	0.01	0.015	0.0086	0.01
118. cadmium	P-7	1	<0.0005	0.003	<0.0041	<0.0005	<0.003
119. chromium	P-7	1	0.002	0.008	0.007	0.009	0.008
120. copper	P-7	1	0.009	0.06	0.07	0.066	0.07
121. cyanide	P-7	1		0.32	1.4	0.09	0.6
122. lead	P-7	1	0.002	0.21	0.4	0.071	0.2
124. nickel	P-7	1	<0.001	0.082	0.105	0.018	0.068
128. zinc	P-7	1	<0.01	0.42	0.83	0.24	0.50

Table V-88 (Continued)

SAMPLING DATA
PLANT P
TREATED WASTEWATER

Pollutant	Stream Code	Sample Type	Source	Concentrations (mg/l) Day 1	Day 2	Day 3	Average
Nonconventional							
aluminum	P-7	1	<0.5	4.1	1.035	1.3	2.1
calcium	P-7	1	96	27	39	22	29
chemical oxygen demand (COD)	P-7	1	<5	3,200	13,100	1,910	6,070
magnesium	P-7	1	26	11	16	11	13
phenols (total; by 4-AAP method)	P-7	1		0.323	0.234	0.313	0.290
total organic carbon (TOC)	P-7	1	2	950	1,790	881	1,207
Conventional							
oil and grease	P-7	1		27	52	18	32
suspended solids	P-7	1	5	153	187	63	134

(a) Reported together.

Table V-89

SAMPLING DATA
PLANT Q
TREATED WASTEWATER

Pollutant	Stream Code	Sample Type	Source	Concentrations (mg/l) Day 1	Day 2	Day 3	Average
Toxic Pollutants							
44. methylene chloride	Q-4	1	*	0.030	*	*	0.010
66. bis(2-ethylhexyl) phthalate	Q-4	3	*	*	*	*	*
	Q-5[a]	6	*	0.030			0.030
115. arsenic	Q-4	3	0.0028	0.13	0.088	0.69	0.30
	Q-5	1	0.0028	0.018			0.018
117. beryllium	Q-4	3	<0.0005	0.018	0.0067	0.019	0.015
	Q-5	1	<0.0005	<0.0005			<0.0005
118. cadmium	Q-4	3	<0.0005	0.0029	0.0017	0.0022	0.0023
	Q-5	1	<0.0005	0.0008			0.0008
119. chromium	Q-4	3	0.004	2.000	1.2	2.9	2.0
	Q-5	1	0.004	0.34			0.34
120. copper	Q-4	3	0.026	17	10	16	14
	Q-5	1	0.026	3			3
122. lead	Q-4	3	0.006	8	5.2	9.5	8
	Q-5	1	0.006	1.8			1.8
123. mercury	Q-4	3	<0.0001	0.002	0.0015	<0.0004	<0.001
	Q-5	1	<0.0001	0.0006			0.0006
124. nickel	Q-4	3	<0.001	0.054	0.013	0.04	0.04
	Q-5	1	<0.001	<0.001			<0.001
128. zinc	Q-4	3	<0.01	43	24	40	36
	Q-5	1	<0.01	9.8			9.8
Nonconventional							
alkalinity	Q-4	3		320	77	78	158
aluminum	Q-4	3	<0.5	450	240	390	360
	Q-5	1	<0.5	72			72

Table V-89 (Continued)

SAMPLING DATA
PLANT Q
TREATED WASTEWATER

Pollutant	Stream Code	Sample Type	Source	Concentrations (mg/l) Day 1	Day 2	Day 3	Average
calcium	Q-4	3	61	76	70	94	80
	Q-5	1	61	60			60
chemical oxygen demand (COD)	Q-4	3		55	16	25	32
dissolved solids	Q-4	3		1,050	570	650	760
magnesium	Q-4	3	12.2	21.9	18	27.6	23
	Q-5	1	12.2	15.9			15.9
sulfate	Q-4	3		140	68	84	97
phenols (total; by 4-AAP method)	Q-4	1		0.024	0.004	0.009	0.012
total organic carbons (TOC)	Q-4	3		1.4	0.74	1.7	1.3
Conventional							
oil and grease	Q-4	1		8			8
suspended solids	Q-4	3		2,460	1,010	1,360	1,610

[a]Sludge sample.

Table V-90

SAMPLING DATA
PLANT U
TREATED WASTEWATER

Pollutant	Stream Code	Sample Type	Source	Concentrations (mg/l) Day 1	Day 2	Day 3	Average
Toxic Pollutants							
1. acenaphthene	U-3	1	ND	ND	ND	ND	
	U-8	3	ND	ND	ND	ND	
	U-9	1	ND	0.060	0.140	0.140	0.113
	U-10[b]	1	ND	ND			
2. acrolein	U-3	1	ND	ND	ND	ND	
	U-8	3	ND	ND	ND	ND	
	U-9	1	ND	0.040	0.020	0.050	0.037
5. benzidine	U-3	1	ND	ND	ND	ND	
	U-8	3	ND	ND	ND	ND	
	U-9	1	ND	ND	ND	0.020	0.020
	U-10	1	ND	ND			
11. 1,1,1-trichloroethane	U-3	1	*	ND	ND	ND	
	U-8	1	*	*	ND	*	*
	U-9	1	*	0.160	0.120	0.140	0.140
13. 1,1-dichloroethane	U-3	1	*	ND	ND	ND	
	U-8	1	*	ND	*	*	*
	U-9	1	*	0.020	0.030	0.030	0.027
44. methylene chloride	U-3	1	*	*	*	0.050	0.017
	U-8	1	*	*	*	*	*
	U-9	1	*	*	*	*	*
55. naphthalene	U-3	1	ND	ND	ND	ND	
	U-8	3	ND	0.070	0.200	0.120	0.130
	U-9	1	ND	0.050	0.030	0.070	0.050
	U-10	1	ND	ND			
65. phenol	U-3	1	ND	ND	ND	ND	
	U-8	3	ND	ND	0.050	ND	0.050
	U-9	1	ND	ND	ND	ND	
	U-10	1	ND	ND			
66. bis(2-ethylhexyl) phthalate	U-3	1	*	*	0.020	*	0.007
	U-8	3	*	0.140	ND	ND	0.140
	U-9	1	*	ND	0.080	0.080	0.080
	U-10	1	*	300.000			300.000

Table V-90 (Continued)

SAMPLING DATA
PLANT U
TREATED WASTEWATER

Pollutant	Stream Code	Sample Type	Source	Concentrations (mg/l) Day 1	Day 2	Day 3	Average
68. di-n-butyl phthalate	U-3	1	ND	0.030	*	*	0.010
	U-8	3	ND	0.180	0.090	0.040	0.103
	U-9	1	ND	0.020	0.080	0.150	0.083
	U-10	1	ND	90.000			90.000
69. di-n-octyl phthalate	U-3	1	ND	ND	ND	ND	
	U-8	3	ND	ND	ND	ND	
	U-9	1	ND	ND	0.020	0.030	0.025
	U-10	1	ND	ND			
70. diethyl phthalate	U-3	1	ND	0.020	*	*	0.007
	U-8	3	ND	0.120	ND	0.070	0.095
	U-9	1	ND	ND	0.030	ND	0.030
	U-10	1	ND	53.000			53.000
78. anthracene (a)	U-3	1	ND	ND	*	ND	*
81. phenanthrene (a)	U-8	3	ND	<0.180	<0.230	<0.110	<0.173
	U-9	1	ND	<0.120	<0.140	<0.170	<0.143
	U-10	1	ND	<110.000			<110.000
80. fluorene	U-3	1	ND	ND	ND	ND	
	U-8	3	ND	0.030	ND	ND	0.030
	U-9	1	ND	ND	0.020	ND	0.020
	U-10	1	ND	ND			
84. pyrene	U-3	1	ND	ND	ND	*	*
	U-8	3	ND	*	ND	0.020	0.010
	U-9	1	ND	*	*	ND	*
	U-10	1	ND	ND			
85. tetrachloroethylene	U-3	1	ND	ND	ND	ND	
	U-8	1	ND	*	0.020	*	0.007
	U-9	1	ND	*	*	*	*
86. toluene	U-3	1	ND	ND	ND	ND	
	U-8	1	ND	0.020	0.050	0.050	0.040
	U-9	1	ND	0.040	0.040	0.050	0.043
118. cadmium	U-3	1	0.002	0.002	0.002	<0.001	<0.002
	U-8	3	0.002	0.029	0.030	0.022	0.027
	U-9	1	0.002	0.003	0.011	0.012	0.009
	U-10	1	0.002	0.440			0.440

Table V-90 (Continued)

SAMPLING DATA
PLANT U
TREATED WASTEWATER

Pollutant	Stream Code	Sample Type	Source	Concentrations (mg/l) Day 1	Day 2	Day 3	Average
119. chromium	U-3	1	<0.001	<0.001	<0.001	<0.001	<0.001
	U-8	3	<0.001	0.042	0.169	0.064	0.092
	U-9	1	<0.001	0.002	0.005	0.005	0.004
	U-10	1	<0.001	8.6			8.6
120. copper	U-3	1	0.013	0.011	0.011	0.014	0.012
	U-8	3	0.013	0.680	1.160	0.640	0.827
	U-9	1	0.013	0.340	0.430	0.420	0.397
	U-10	1	0.013	13.00			13.00
122. lead	U-3	1	0.010	0.006	0.006	0.008	0.007
	U-8	3	0.010	7.090	20.600	15.200	14.297
	U-9	1	0.010	4.300	8.400	7.800	6.833
	U-10	1	0.010	4.900			4.900
123. mercury	U-3	1	0.005	0.003	0.003	0.003	0.003
	U-8	3	0.005	0.002	0.005	0.002	0.003
	U-9	1	0.005	0.003	0.003	0.002	0.003
	U-10	1	0.005	0.006			0.006
124. nickel	U-3	1	0.016	0.013	0.005	<0.001	<0.006
	U-8	3	0.016	0.088	0.089	0.049	0.075
	U-9	1	0.016	0.067	0.032	0.047	0.049
	U-10	1	0.016	3.520			3.520
128. zinc	U-3	1	ND	0.230	0.240	0.300	0.257
	U-8	3	ND	0.510	0.800	0.650	0.653
	U-9	1	ND	11.000	0.680	0.540	4.073
	U-10	1	ND	12.00			12.00
Nonconventional							
alkalinity	U-3	1		59.00	66.00	82.00	69.00
aluminum	U-3	1		<0.100	<0.100	<0.100	<0.100
	U-8	3		23.00	25.00	13.00	20.33
	U-9	1		2.000	2.000	2.000	2.000
	U-10	4		1,322			1,322
calcium	U-3	1		143.0	148.0	138.0	143.0
	U-8	3		59.60	89.40	98.00	82.33
	U-9	1		92.20	89.00	88.80	90.00
	U-10	4		417.0			417.0

Table V-90 (Continued)

SAMPLING DATA
PLANT U
TREATED WASTEWATER

Pollutant	Stream Code	Sample Type	Source	Concentrations (mg/l) Day 1	Day 2	Day 3	Average
chemical oxygen demand (COD)	U-3	1		11	18	108	46
	U-8	3		4,860	2,940	1,700	3,170
	U-9	1		1,210	981	4,070	2,087
	U-10	4		880,000			880,000
dissolved solids	U-3	1		830.0	830.0	840.0	833.3
magnesium	U-3	1		16.40	13.30	18.00	15.90
	U-8	3		12.70	12.70	11.80	12.40
	U-9	1		13.30	11.50	12.70	12.50
	U-10	4		47.00			47.00
sulfate	U-3	1		360	350	400	370
phenols (total; by 4-AAP method)	U-3	1		0.010	0.021	0.020	0.017
	U-8	1		0.043	0.135	0.081	0.086
	U-10	4		2.7			
total organic carbon (TOC)	U-3	1		2.8	3.3	5.6	3.9
	U-8	3		470	470	244	395
	U-9	1		228	265	129	207
	U-10	4		7,200			7,200
Conventional							
oil and grease	U-3	1		5	25	4,490	1,507
	U-8	1		4,000	46,700	3,120	17,940
	U-9	1		1,340	1,150	1,250	1,250
	U-10	1		938,000			938,000
suspended solids	U-3	1		3.8	11	139	51
	U-8	3		1,369	6,050	4,110	3,843
	U-9	1		490	498	392	460
	U-10	4		2,750			2,750
pH (standard units)	U-3	1			7.0		

(a) Reported together.

b Oil sample.

Table V-91

SAMPLING DATA
PLANT V
TREATED WASTEWATER

Pollutant	Stream Code	Sample Type	Source	Concentrations (mg/l) Day 1	Day 2	Day 3	Average
Toxic Pollutants							
11. 1,1,1-trichloroethane	V-8	2		ND	*	*	*
44. methylene chloride	V-8	2		0.031	*	*	0.015
65. phenol	V-8	1		1.600	0.920	0.540	1.020
66. bis(2-ethylhexyl) phthalate	V-8	2		*	*	*	*
68. di-n-butyl phthalate	V-8	2		ND	*	ND	*
70. diethyl phthalate	V-8	2		ND	*	ND	*
78. anthracene (a) 81. phenanthrene (a)	V-8	2		*	ND	ND	*
86. toluene	V-8	2		ND	*	*	*
115. arsenic	V-8	2		<0.005	0.085	<0.005	<0.032
118. cadmium	V-8	2		<0.001	0.002	0.001	<0.001
119. chromium	V-8	2		0.005	0.004	0.006	0.005
120. copper	V-8	2		0.027	0.027	0.07	0.04
122. lead	V-8	2		<0.001	0.004	0.003	<0.003
124. nickel	V-8	2		0.004	0.006	0.005	0.005
128. zinc	V-8	2		0.06	0.08	0.35	0.16
Nonconventional							
alkalinity	V-8	2		270	250	250	260
aluminum	V-8	2		6.1	3.8	2.2	4.0
calcium	V-8	2		68	67	81	72
chemical oxygen demand (COD)	V-8	2		120	44	150	105

Table V-91 (Continued)

SAMPLING DATA
PLANT V
TREATED WASTEWATER

Pollutant	Stream Code	Sample Type	Source	Concentrations (mg/l) Day 1	Day 2	Day 3	Average
dissolved solids	V-8	2		830	950	660	810
magnesium	V-8	2		53	50	62	55
phenols (total; by 4-AAP method)	V-8	2		2.400	1.800	0.440	1.547
sulfate	V-8	2		210	220	91	174
total organic carbon (TOC)	V-8	2		42	42	63	49
Conventional							
oil and grease	V-8	1		15	11	15	14
suspended solids	V-8	2		36	36	33	35

(a) Reported together.

Table V-92

SAMPLING DATA
PLANT AA
TREATED WASTEWATER

Pollutant	Stream Code	Sample Type	Source	Day 1	Day 2	Day 3	Average
Toxic Pollutants							
114. antimony	AA-6	3	<0.010	<0.010	<0.010	<0.010	<0.010
	AA-7	3	<0.010	<0.010	<0.010	<0.010	<0.010
115. arsenic	AA-6	3	<0.010	0.010	<0.060	<0.010	<0.040
	AA-7	3	<0.010	<0.010	<0.010	<0.010	<0.010
117. beryllium	AA-6	3	<0.005	<0.005	<0.005	<0.005	<0.005
	AA-7	3	<0.005	<0.005	<0.005	<0.005	<0.005
118. cadmium	AA-6	3	<0.020	<0.020	<0.020	<0.020	<0.020
	AA-7	3	<0.020	<0.020	<0.020	<0.020	<0.020
119. chromium	AA-6	3	<0.020	<0.020	0.080	0.040"2"	<0.047
	AA-7	3	<0.020	<0.020	<0.020	<0.020	<0.020
120. copper	AA-6	3	<0.050	0.100	4.15	0.350"2"	1.53
	AA-7	3	<0.050	0.050	0.050	<0.050	<0.050
121. cyanide (total)	AA-6	3	<0.02	<0.02	<0.02	<0.02	<0.02
	AA-7	3	<0.02	<0.02	<0.02	<0.02	<0.02
122. lead	AA-6	3	<0.050	<0.050	0.300	0.200"2"	<0.183
	AA-7	3	<0.050	<0.050	<0.050	<0.050	<0.050
123. mercury	AA-6	3	<0.0002	<0.0002	<0.0002	0.0006	<0.0003
	AA-7	3	<0.0002	<0.0002	<0.0002	<0.0002	<0.0002
124. nickel	AA-6	3	<0.050	<0.050	<0.050	<0.050	<0.050
	AA-7	3	<0.050	<0.050	<0.050	<0.050	<0.050
125. selenium	AA-6	3	<0.010	<0.010	<0.010	<0.010	<0.010
	AA-7	3	<0.010	<0.010	<0.010	<0.010	<0.010
126. silver	AA-6	3	<0.010	<0.010	<0.010	<0.010	<0.010
	AA-7	3	<0.010	<0.010	<0.010	<0.010	<0.010
127. thallium	AA-6	3	<0.010	<0.010	<0.010	<0.010	<0.010
	AA-7	3	<0.010	<0.010	<0.010	<0.010	<0.010
128. zinc	AA-6	3	<0.020	0.360	2.38	4.78"2"	2.51
	AA-7	3	<0.020	0.80	0.140	0.100	0.35

Table V-92 (Continued)

SAMPLING DATA
PLANT AA
TREATED WASTEWATER

Pollutant	Stream Code	Sample Type	Source	Day 1	Day 2	Day 3	Average
Nonconventional							
acidity	AA-6	3	<1	<1	<1	<1	<1
	AA-7	3	<1	<1	<1	<1	<1
alkalinity	AA-6	3	270	235	570	270	358
	AA-7	3	270	170	610	240	340
aluminum	AA-6	3	<0.100	0.700	61.0	13.0"2"	25.0
	AA-7	3	<0.100	4.4	2.1	1.1	2.5
ammonia nitrogen	AA-6	3	0.10	0.48	1.2	0.49	0.72
	AA-7	3	0.10	0.89	0.05	0.04	0.33
barium	AA-6	3	0.250	0.200	0.250	0.400	0.293
	AA-7	3	0.250	0.100	0.150	0.150	0.130
boron	AA-6	3	<0.100	<0.100	0.100	0.100	<0.100
	AA-7	3	<0.100	<0.100	0.100	<0.100	<0.100
calcium	AA-6	3	117	109	128.0	130.0	122.0
	AA-7	3	117	165.0	117.0	113.0	132.0
chemical oxygen demand (COD)	AA-6	3	23	220	484	512	405
	AA-7	3	23	113	78	93	95
chloride	AA-6	3	24	100	92	115	102
	AA-7	3	24	110	130	120	120
cobalt	AA-6	3	<0.050	<0.050	<0.050	<0.050	<0.050
	AA-7	3	<0.050	<0.050	<0.050	<0.050	<0.050
dissolved solids	AA-6	3	530	3,040	620	570	1,410
	AA-7	3	530	656	1,100	720	825
fluoride	AA-6	3	0.17	0.88	0.2	0.12	0.4
	AA-7	3	0.17	1.5	1.0	0.07	0.9
iron	AA-6	3	2.85	1.55	4.80	7.10"2"	4.48
	AA-7	3	2.85	0.200	0.550	0.100	0.280
magnesium	AA-6	3	33.9	31.3	49.1	38.2	39.5
	AA-7	3	33.9	29.2	31.1	33.0	31.1

Table V-92 (Continued)

SAMPLING DATA
PLANT AA
TREATED WASTEWATER

Pollutant	Stream Code	Sample Type	Source	Day 1	Day 2	Day 3	Average
manganese	AA-6	3	<5.0	0.100	0.450	0.300"2"	0.300
	AA-7	3	<5.0	0.050	0.100	0.050	0.07
molybdenum	AA-6	3	<0.050	<0.050	<0.050	<0.050	<0.050
	AA-7	3	<0.050	<0.050	<0.050	<0.050	<0.050
phenols (total; by 4-AAP method)	AA-6	3	<0.005	0.24	0.25	0.018	0.17
	AA-7	3	<0.005	16	1.72	0.093	5.94
phosphate	AA-6	3	<3	<3	<3	<3	<3
	AA-7	3	<3	<3	<3	<3	<3
sodium	AA-6	3	4.8	40.7	89.0	39.7	56.5
	AA-7	3	4.8	62.6	194.0	68.9	43.8
sulfate	AA-6	3	115	90	90	99	93
	AA-7	3	115	300	490	150	313
tin	AA-6	3	<0.050	<0.050	<0.050	<0.050	<0.050
	AA-7	3	<0.050	<0.050	<0.050	<0.050	<0.050
titanium	AA-6	3	<0.050	<0.050	0.100	0.100	<0.080
	AA-7	3	<0.050	<0.050	<0.050	<0.050	<0.050
total organic carbon (TOC)	AA-6	3	<1	61	100	88	83
	AA-7	3	<1	36	21	18	25
total solids (TS)	AA-6	3	590	703	1,530	1,260	1,164
	AA-7	3	590	878	1,200	760	946
vanadium	AA-6	3	<0.050	<0.050	<0.050	<0.050	<0.050
	AA-7	3	<0.050	<0.050	<0.050	<0.050	<0.050
yttrium	AA-6	3	<0.050	<0.050	<0.050	<0.050	<0.050
	AA-7	3	<0.050	<0.050	<0.050	<0.050	<0.050

Table V-92 (Continued)

SAMPLING DATA
PLANT AA
TREATED WASTEWATER

Pollutant	Stream Code	Sample Type	Source	Day 1	Day 2	Day 3	Average
Conventional							
oil and grease	AA-6	3	<0.5	41	25	160	75
	AA-7	3	<0.5	8.4	1.4	15	8.3
pH (standard units)	AA-6	3	7.44	7.02	6.38	7.02	
	AA-7	3	7.44	6.92	6.48	7.19	
suspended solids	AA-6	3	17	2,060	820	655	1,178
	AA-7	3	17	95	32	9	45

"2" Average of duplicates.

Table V-93

SAMPLING DATA
PLANT BB
TREATED WASTEWATER

Pollutant	Stream Code	Sample Type	Source	Day 1	Day 2	Day 3	Average
Toxic Pollutants							
114. antimony	BB-11	9	<0.025	<0.010	<0.010	<0.010	<0.010
	BB-12	9	<0.025	<0.020†	<0.020†	0.080	<0.04†
115. arsenic	BB-11	9	<0.010	0.060	<0.090"2"	0.040	<0.060
	BB-12	9	<0.010	<0.020†	<0.020†	Chem. Inter.	<0.020†
117. beryllium	BB-11	9	<0.015	<0.005	<0.005	<0.005	<0.005
	BB-12	9	<0.015	<0.005	<0.005	<0.005	<0.005
118. cadmium	BB-11	9	<0.060	<0.020	<0.020	<0.020	<0.020
	BB-12	9	<0.060	<0.020	<0.020	<0.020	<0.020
119. chromium	BB-11	9	<0.060	0.020	<0.020	0.040	<0.03
	BB-12	9	<0.060	<0.020	<0.020	<0.020	<0.020
120. copper	BB-11	9	<0.150	0.150	0.200	0.250	0.200
	BB-12	9	<0.150	<0.050	<0.050	<0.050	<0.050
121. cyanide (total)	BB-11	9	<0.02	<0.02	<0.02	<0.02	<0.02
	BB-12	9	<0.02	<0.02	<0.02	<0.02	<0.02
122. lead	BB-11	9	<0.150	0.100	0.200	0.250	0.180
	BB-12	9	<0.150	<0.050	<0.050	<0.050	<0.050
123. mercury	BB-11	9	<0.0002	<0.0002	<0.0002	0.0006	<0.0003
	BB-12	9	<0.0002	<0.0002	<0.0002	<0.0002	<0.0002
124. nickel	BB-11	9	<0.150	0.400	0.100	0.850	0.450
	BB-12	9	<0.150	<0.050	<0.050	<0.050	<0.050
125. selenium	BB-11	9	<0.010	<0.010	<0.010	<0.010	<0.010
	BB-12	9	<0.010	<0.010	<0.010	<0.050†	<0.020†
126. silver	BB-11	9	<0.010	<0.010	<0.010	<0.010	<0.010
	BB-12	9	<0.010	<0.010	<0.010	<0.010	<0.010
127. thallium	BB-11	9	<0.001	<0.010	<0.010	<0.010	<0.010
	BB-12	9	<0.001	<0.010	<0.010	<0.010	<0.010
128. zinc	BB-11	9	<0.060	0.060	0.080	0.140	0.090
	BB-12	9	<0.060	0.040	0.040	<0.020	0.030

Table V-93 (Continued)

SAMPLING DATA
PLANT BB
TREATED WASTEWATER

Pollutant	Stream Code	Sample Type	Source	Day 1	Day 2	Day 3	Average
Nonconventional							
acidity	BB-11	9	<1	<1	<1	<1	<1
	BB-12	9	<1	<1	<1	<1	<1
alkalinity	BB-11	9	160	77	<1	1,960	<679
	BB-12	9	160	150	150	300	200
aluminum	BB-11	9	0.500	96.500	146	132	125
	BB-12	9	0.500	1.800	3.000	6.6	3.800
ammonia nitrogen	BB-11	9	0.05	0.38	0.14	<0.05	<0.19
	BB-12	9	0.05	0.18	0.11	0.03	0.11
barium	BB-11	9	<0.150	<0.050	<0.050	<0.050	<0.050
	BB-12	9	<0.150	<0.050	<0.050	<0.050	<0.050
boron	BB-11	9	0.800	2.100	1.800	2.200	2.000
	BB-12	9	0.800	2.100	1.800	1.400	1.800
calcium	BB-11	9	4.800	5.000	4.900	5.300	5.100
	BB-12	9	4.800	3.900	3.300	1.300	2.800
chemical oxygen demand (COD)	BB-11	9	9	28	81	153	87
	BB-12	9	9	6	82	85	58
chloride	BB-11	9	17	18	21	41	27
	BB-12	9	17	28	25	46	33
cobalt	BB-11	9	<0.150	<0.050	<0.050	<0.050	<0.050
	BB-12	9	<0.150	<0.050	<0.050	<0.050	<0.050
dissolved solids	BB-11	9	310	3,280	1,400	3,030	2,570
	BB-12	9	310	1,482	1,750	5,020	2,751
fluoride	BB-11	9	<0.05	0.33	0.32	<0.05	<0.23
	BB-12	9	<0.05	<0.05	0.21	0.66	<0.31
iron	BB-11	9	<0.150	3.200	3.800	6.800	4.600
	BB-12	9	<0.150	0.050	0.050	0.100	0.070
magnesium	BB-11	9	0.500	1.300	1.200	1.900	1.200
	BB-12	9	0.500	1.400	1.100	0.500	1.000

Table V-93 (Continued)

SAMPLING DATA
PLANT BB
TREATED WASTEWATER

Pollutant	Stream Code	Sample Type	Source	Day 1	Day 2	Day 3	Average
manganese	BB-11	9	<0.100	<0.050	<0.050	0.050	<0.050
	BB-12	9	<0.100	<0.050	<0.050	<0.050	<0.050
molybdenum	BB-11	9	<0.150	<0.050	<0.050	<0.050	<0.050
	BB-12	9	<0.150	<0.050	<0.050	<0.050	<0.050
phenols (total; by 4-AAP method)	BB-11	9	0.026	<0.005	<0.005	0.032	<0.014
	BB-12	9	0.026	<0.005	0.017	0.005	<0.009
phosphate	BB-11	9	21	<3	<3	75	<27
	BB-12	9	21	<3	33	<3	<13
sodium	BB-11	9	76.7	272.000	393.000	1,020	562.000
	BB-12	9	76.7	642.000	532.000	1,560	911.000
sulfate	BB-11	9	90	450	750	750	650
	BB-12	9	90	900	260	2,600	1,253
tin	BB-11	9	<0.150	<0.050	<0.050	<0.050	<0.050
	BB-12	9	<0.150	<0.050	<0.050	<0.050†	<0.050†
titanium	BB-11	9	<0.150	<0.050	<0.050	0.100	<0.070
	BB-12	9	<0.150	<0.050	<0.050	<0.050	<0.050
total organic carbon (TOC)	BB-11	9	<1	15	13	9	12
	BB-12	9	<1	19	5	11	12
total solids (TS)	BB-11	9	267	1,310	2,000	3,261	2,190
	BB-12	9	267	2,030	1,800	5,040	2,957
vanadium	BB-11	9	<0.150	<0.050	<0.050	<0.050	<0.050
	BB-12	9	<0.150	<0.050	<0.050	<0.050	<0.050
yttrium	BB-11	9	<0.150	<0.050	<0.050	<0.050	<0.050
	BB-12	9	<0.150	<0.050	<0.050	<0.050	<0.050

Table V-93 (Continued)

SAMPLING DATA
PLANT BB
TREATED WASTEWATER

Pollutant	Stream Code	Sample Type	Source	Day 1	Day 2	Day 3	Average
Conventional							
oil and grease	BB-11	9	<1	<1	1.5	<1	<1.2
	BB-12	9	<1	<1	<1	<1	<1
pH (standard units)	BB-11	9	7.68	6.12	6.26	9.40	
	BB-12	9	7.68	6.72	7.03	8.49	
suspended solids	BB-11	9	8	383	590	37	337
	BB-12	9	8	9	24	<1	<11

†Detection limit raised due to interference.

"2" Average of duplicates.

Table V-94

SAMPLING DATA
PLANT DD
TREATED WASTEWATER

Pollutant	Stream Code	Sample Type	Source	Day 1	Day 2	Day 3	Average
Toxic Pollutants							
114. antimony	DD-13	9	< .002	0.002	<0.002	0.004	<0.003
	DD-14	1	< .002	0.003			0.003
	DD-15	9	< .002	0.006	0.002	0.004	0.004
	DD-16	9	< .002	<0.002	<0.002	<0.002	<0.002
115. arsenic	DD-13	9	<0.001	0.004	0.001	.154	0.053
	DD-14	1	<0.001	.012			.012
	DD-15	9	<0.001	0.006	0.005	.418	0.143
	DD-16	9	<0.001	0.001	0.010	1.320	0.444
117. beryllium	DD-13	9	<0.010	<0.010	<0.010	<0.010	<0.010
	DD-14	1	<0.010	<0.020			<0.020
	DD-15	9	<0.010	<0.010	<0.010	<0.010	<0.010
	DD-16	9	<0.010	<0.010	<0.010	<0.010	<0.010
118. cadmium	DD-13	9	<0.010	<0.010	<0.010	<0.010	<0.010
	DD-14	1	<0.010	<0.010			<0.010
	DD-15	9	<0.010	<0.010	<0.010	<0.010	<0.010
	DD-16	9	<0.010	<0.010	<0.010	<0.010	<0.010
119. chromium	DD-13	9	<0.020	<0.020	<0.020	<0.020	<0.020
	DD-14	1	<0.020	<0.020			<0.020
	DD-15	9	<0.020	<0.020	<0.020	<0.020	<0.020
	DD-16	9	<0.020	<0.020	<0.020	<0.020	<0.020
120. copper	DD-13	9	.013	<0.010	<0.010	<0.010	<0.010
	DD-14	1	.013	.331			.331
	DD-15	9	.013	.080	<0.010	.074	<0.055
	DD-16	9	.013	<0.010	<0.010	<0.010	<0.010
121. cyanide (total)	DD-13	9	<0.02	<0.02	<0.02	<0.02	<0.02
	DD-14	1	<0.02	0.034			0.034
	DD-15	9	<0.02	<0.02	<0.02	<0.02	<0.02
	DD-16	9	<0.02	<0.02	<0.02	<0.02	<0.02
122. lead	DD-13	9	<0.100	<0.100	<0.100	<0.100	<0.100
	DD-14	1	<0.100	<0.100			<0.100
	DD-15	9	<0.100	<0.100	<0.100	<0.100	<0.100
	DD-16	9	<0.100	<0.100	<0.100	<0.100	<0.100

Table V-94 (Continued)

SAMPLING DATA
PLANT DD
TREATED WASTEWATER

Pollutant	Stream Code	Sample Type	Source	Day 1	Day 2	Day 3	Average
123. mercury	DD-13	9	<0.005	<0.005	<0.005	<0.005	<0.005
	DD-14	1	<0.005	<0.005			<0.005
	DD-15	9	<0.005	<0.005	<0.005	<0.005	<0.005
	DD-16	9	<0.005	<0.005	<0.005	<0.005	<0.005
124. nickel	DD-13	9	<0.050	<0.020	.529	<0.020	<0.190
	DD-14	1	<0.050	<0.020			<0.020
	DD-15	9	<0.050	<0.020	<0.020	<0.020	<0.020
	DD-16	9	<0.050	<0.020	<0.020	<0.020	<0.020
125. selenium	DD-13	9	<0.005	0.011	<0.005	<0.005	<0.007
	DD-14	1	<0.005	<0.005			<0.005
	DD-15	9	<0.005	<0.005	<0.005	<0.005	<0.005
	DD-16	9	<0.005	<0.005	<0.005	<0.005	<0.005
126. silver	DD-13	9	<0.001	0.021	<0.001	<0.001	<0.008
	DD-14	1	<0.001	<0.001			<0.001
	DD-15	9	<0.001	0.007	<0.001	<0.001	<0.003
	DD-16	9	<0.001	<0.001	<0.001	<0.001	<0.001
127. thallium	DD-13	9	<0.001	<0.001	<0.001	<0.001	<0.001
	DD-14	1	<0.001	<0.001			<0.001
	DD-15	9	<0.001	<0.001	<0.001	<0.001	<0.001
	DD-16	9	<0.001	<0.001	<0.001	<0.001	<0.001
128. zinc	DD-13	9	<0.010	<0.010	<0.010	<0.010	<0.010
	DD-14	1	<0.010	.090			.090
	DD-15	9	<0.010	<0.010	<0.010	<0.010	<0.010
	DD-16	9	<0.010	0.010	<0.010	<0.010	<0.010
Nonconventional							
acidity	DD-13	9	<1	<1	<1	<1	<1
	DD-14	1	<1	<1			<1
	DD-15	9	<1	<1	<1	<1	<1
	DD-16	9	<1	<1	<1	<1	<1
alkalinity	DD-13	9	274	170	177	190	179
	DD-14	1	274	1,000			1,000
	DD-15	9	274	304	190	290	261
	DD-16	9	274	180	183	190	184

Table V-94 (Continued)

SAMPLING DATA
PLANT DD
TREATED WASTEWATER

Pollutant	Stream Code	Sample Type	Source	Day 1	Day 2	Day 3	Average
aluminum	DD-13	9	<0.050	43.6	31.4	5.46	26.8
	DD-14	1	<0.050	156			156
	DD-15	9	<0.050	129	40.6	132	101
	DD-16	9	<0.050	1.54	4.27	4.96	3.59
ammonia nitrogen	DD-13	9	<0.01	<0.01	0.43	0.15	<0.20
	DD-14	1	<0.01	0.34			0.34
	DD-15	9	<0.01	0.12	0.33	0.69	0.38
	DD-16	9	<0.01	0.064	0.38	0.63	0.36
barium	DD-13	9	.179	.027	<0.020	.060	<0.036
	DD-14	1	.179	.125			.125
	DD-15	9	.179	.069	<0.020	.163	<0.084
	DD-16	9	.179	<0.020	.042	.130	<0.064
boron	DD-13	9	<0.100	<0.100	<0.100	<0.100	<0.100
	DD-14	1	<0.100	<0.100			<0.100
	DD-15	9	<0.100	<0.100	<0.100	<0.100	<0.100
	DD-16	9	<0.100	<0.100	<0.100	<0.100	<0.100
calcium	DD-13	9	5.68	560	492	5.26	352
	DD-14	1	5.68	430			430
	DD-15	9	5.68	418	91	5.72	172
	DD-16	9	5.68	353	5.73	5.74	121.49
chemical oxygen demand (COD)	DD-13	9	<0.5	54	76	50	60
	DD-14	1	<0.5	36			36
	DD-15	9	<0.5	66	150	62	93
	DD-16	9	<0.5	42	110	100	84
chloride	DD-13	9	61	120	120	120	120
	DD-14	1	61	60			60
	DD-15	9	61	79	80	82	80
	DD-16	9	61	92	83	90	88
cobalt	DD-13	9	<0.010	<0.010	<0.010	<0.010	<0.010
	DD-14	1	<0.010	<0.010			<0.010
	DD-15	9	<0.010	<0.010	<0.010	<0.010	<0.010
	DD-16	9	<0.010	<0.010	<0.010	<0.010	<0.010

Table V-94 (Continued)

SAMPLING DATA
PLANT DD
TREATED WASTEWATER

Pollutant	Stream Code	Sample Type	Source	Day 1	Day 2	Day 3	Average
dissolved solids	DD-13	9	670	1,340	1,300	1,040	1,230
	DD-14	1	670	1,500			1,500
	DD-15	9	670	1,160	1,300	1,280	1,250
	DD-16	9	670	1,360	1,300	1,000	1,220
fluoride	DD-13	9	0.29	0.29	0.22	0.30	0.27
	DD-14	1	0.29	0.31			0.31
	DD-15	9	0.29	0.33	0.25	0.51	0.36
	DD-16	9	0.29	0.15	0.24	0.35	0.25
iron	DD-13	9	.054	.198	.279	.554	0.344
	DD-14	1	.054	7.10			7.10
	DD-15	9	.054	2.59	<0.020	3.25	<1.95
	DD-16	9	.054	0.054	0.022	<0.020	<0.032
magnesium	DD-13	9	108	14	5.29	7.10	8.80
	DD-14	1	108	172			172
	DD-15	9	108	315	5.52	8.50	110
	DD-16	9	108	5.68	7.845	5.69	6.41
manganese	DD-13	9	<0.010	<0.010	<0.010	<0.010	<0.010
	DD-14	1	<0.010	.111			0.111
	DD-15	9	<0.010	.038	<0.010	.033	<0.027
	DD-16	9	<0.010	<0.010	<0.010	<0.010	<0.010
molybdenum	DD-13	9	<0.020	<0.020	<0.020	<0.020	<0.020
	DD-14	1	<0.020	<0.020			<0.020
	DD-15	9	<0.020	<0.020	<0.020	<0.020	<0.020
	DD-16	9	<0.020	<0.020	<0.020	<0.020	<0.020
phosphate	DD-13	9	20	12	8.9	5.9	8.9
	DD-14	1	20	<4			<4
	DD-15	9	20	8.1	4.9	5.4	6.1
	DD-16	9	20	15	<4	7.1	<8.7

Table V-94 (Continued)

SAMPLING DATA
PLANT DD
TREATED WASTEWATER

Pollutant	Stream Code	Sample Type	Source	Day 1	Day 2	Day 3	Average
sulfate	DD-13	9	180	450	450	500	470
	DD-14	1	180	300			300
	DD-15	9	180	510	450	680	550
	DD-16	9	180	510	497	600	540
tin	DD-13	9	<0.020	<0.020	<0.020	<0.020	<0.020
	DD-14	1	<0.020	<0.020			<0.020
	DD-15	9	<0.020	<0.020	<0.020	.034	<0.025
	DD-16	9	<0.020	<0.020	<0.020	<0.020	<0.020
titanium	DD-13	9	<0.010	<0.010	<0.010	<0.010	<0.010
	DD-14	1	<0.010	<0.010			<0.010
	DD-15	9	<0.010	<0.010	<0.010	.144	<0.055
	DD-16	9	<0.010	<0.010	.062	<0.010	<0.027
total organic carbon (TOC)	DD-13	9	<1	6.1	4.9	4.9	5.9
	DD-14	1	<1	12			12
	DD-15	9	<1	20	8.4	14	14
	DD-16	9	<1	13	11	12	12
total solids (TS)	DD-13	9	380	1,060	1,150	1,060	1,090
	DD-14	1	380	2,300			2,300
	DD-15	9	380	1,710	1,140	1,940	1,600
	DD-16	9	380	1,060	1,080	1,000	1,050
vanadium	DD-13	9	.026	<0.020	<0.020	<0.020	<0.020
	DD-14	1	.026	<0.020			<0.020
	DD-15	9	.026	.022	<0.020	.016	<0.019
	DD-16	9	.026	<0.020	<0.020	<0.020	<0.020
yttrium	DD-13	9	<0.020	<0.020	<0.020	<0.020	<0.020
	DD-14	1	<0.020	<0.020			<0.020
	DD-15	9	<0.020	<0.020	<0.020	<0.020	<0.020
	DD-16	9	<0.020	<0.020	<0.020	<0.020	<0.020

Table V-94 (Continued)

SAMPLING DATA
PLANT DD
TREATED WASTEWATER

Pollutant	Stream Code	Sample Type	Source	Day 1	Day 2	Day 3	Average
Conventional							
oil and grease	DD-13	9	<1	<1	7	8	<5
	DD-14	1	<1	<1			<1
	DD-15	9	<1	4	4	3	4
	DD-16	9	<1	<1	3.2	5	<3.1
pH (standard units)	DD-13	9	7.03	7.92	7.96	8.54	
	DD-14	1	7.03	8.48			
	DD-15	9	7.03	7.41	8.25	8.00	
	DD-16	9	7.03	7.77	8.23	8.32	
suspended solids	DD-13	9	1	69	71	89	76
	DD-14	1	1	1,060			1,060
	DD-15	9	1	660	120	770	520
	DD-16	9	1	19	12	8	13

Table V-95

SAMPLING DATA
PLANT EE
TREATED WASTEWATER

Pollutant	Stream Code	Sample Type	Source	Day 1	Day 2	Day 3	Average
Toxic Pollutants							
114. antimony	EE-6	8	<0.002	0.045	0.023	0.002	0.023
	EE-7	2	<0.002	0.041	0.011	0.010	0.021
	EE-8	3	<0.002	<0.001	0.002	0.002	<0.002
	EE-9	2	<0.002	<0.002	<0.002	<0.002	<0.002
115. arsenic	EE-6	8	0.021	0.026	0.147	0.777	0.317
	EE-7	2	0.021	0.210	0.042	0.042	0.098
	EE-8	3	0.021	0.006	0.294	0.231	0.177
	EE-9	2	0.021	0.003	0.063	0.006	0.024
117. beryllium	EE-6	8	<0.001	<0.010	<0.010	<0.010	<0.010
	EE-7	2	<0.001	<0.010	<0.010	<0.010	<0.010
	EE-8	3	<0.001	<0.010	<0.010	<0.010	<0.010
	EE-9	2	<0.001	<0.010	<0.010	<0.010	<0.010
118. cadmium	EE-6	8	<0.010	<0.010	0.021	0.086	<0.117
	EE-7	2	<0.010	<0.010	<0.010	<0.010	<0.010
	EE-8	3	<0.010	<0.010	<0.010	<0.010	<0.010
	EE-9	2	<0.010	<0.010	<0.010	<0.010	<0.010
119. chromium	EE-6	8	0.021	1.50	0.084	0.549	0.711
	EE-7	2	0.021	105	31.5	22.5	53
	EE-8	3	0.021	0.858	0.236	0.139	0.411
	EE-9	2	0.021	0.069	<0.020	0.024	<0.038
120. copper	EE-6	8	<0.010	0.847	<0.010	<0.010	<0.289
	EE-7	2	<0.010	1.32	0.179	0.160	0.553
	EE-8	3	<0.010	<0.010	0.017	<0.010	<0.012
	EE-9	2	<0.010	<0.010	<0.010	<0.010	<0.010
121. cyanide (total)	EE-6	8	<0.02	0.039	<0.02	<0.02	<0.026
	EE-7	2	<0.02	0.044	<0.02	<0.02	<0.028
	EE-8	3	<0.02	0.032	<0.02	<0.02	<0.024
	EE-9	2	<0.02	<0.02	<0.02	<0.02	<0.02
122. lead	EE-6	8	<0.100	<0.100	<0.100	<0.100	<0.100
	EE-7	2	<0.100	<0.100	<0.100	<0.100	<0.100
	EE-8	3	<0.100	<0.100	<0.100	<0.100	<0.100
	EE-9	2	<0.100	<0.100	<0.100	<0.100	<0.100

Table V-95 (Continued)

SAMPLING DATA
PLANT EE
TREATED WASTEWATER

Pollutant	Stream Code	Sample Type	Source	Day 1	Day 2	Day 3	Average
123. mercury	EE-6	8	<0.005	<0.005	<0.005	<0.005	<0.005
	EE-7	2	<0.005	<0.005	<0.005	<0.005	<0.005
	EE-8	3	<0.005	<0.005	<0.005	<0.005	<0.005
	EE-9	2	<0.005	<0.005	<0.005	<0.005	<0.005
124. nickel	EE-6	8	<0.020	0.043	0.053	0.286	0.127
	EE-7	2	<0.020	0.039	0.072	<0.020	<0.044
	EE-8	3	<0.020	0.024	<0.020	0.057	<0.034
	EE-9	2	<0.020	<0.020	<0.020	0.043	<0.028
125. selenium	EE-6	8	<0.005	<0.005	<0.005	<0.005	<0.005
	EE-7	2	<0.005	<0.005	<0.005	<0.005	<0.005
	EE-8	3	<0.005	<0.005	<0.005	<0.005	<0.005
	EE-9	2	<0.005	<0.005	<0.005	<0.005	<0.005
126. silver	EE-6	8	<0.001	<0.001	<0.001	<0.001	<0.001
	EE-7	2	<0.001	<0.001	<0.001	<0.001	<0.001
	EE-8	3	<0.001	<0.001	<0.001	<0.001	<0.001
	EE-9	2	<0.001	<0.001	<0.001	<0.001	<0.001
127. thallium	EE-6	8	<0.001	<0.001	<0.001	<0.001	<0.001
	EE-7	2	<0.001	<0.001	<0.001	<0.001	<0.001
	EE-8	3	<0.001	<0.001	<0.001	<0.001	<0.001
	EE-9	2	<0.001	<0.001	<0.001	<0.001	<0.001
128. zinc	EE-6	8	0.064	2.07	2.38	17.48	7.31
	EE-7	2	0.064	1.34	0.547	0.618	0.835
	EE-8	3	0.064	<0.020	<0.020	<0.020	<0.020
	EE-9	2	0.064	0.020	0.073	0.046	0.046
Nonconventional							
acidity	EE-6	8	<1	1,800	1,580	690	1,360
	EE-7	2	<1	<1	<1	<1	<1
	EE-8	3	<1	<1	<1	<1	<1
	EE-9	2	<1		<1	<1	<1
alkalinity	EE-6	8	22	<1	<1	<1	<1
	EE-7	2	22	700	14	11	242
	EE-8	3	22	30	750	230	340
	EE-9	2	22	<1	40	25	22

Table V-95 (Continued)

SAMPLING DATA
PLANT EE
TREATED WASTEWATER

Pollutant	Stream Code	Sample Type	Source	Day 1	Day 2	Day 3	Average
aluminum	EE-6	8	0.011	35.6	50.1	146	77.2
	EE-7	2	0.011	45.5	41.0	63.9	50.1
	EE-8	3	0.011	2.38	3.15	13.5	6.34
	EE-9	2	0.011	.123	0.082	0.087	0.097
ammonia nitrogen	EE-6	8	<0.05	5.73	46	12	21.2
	EE-7	2	<0.05	1.24	37	1.8	13.3
	EE-8	3	<0.05	0.32	22	2.9	8.4
	EE-9	2	<0.05	1.67	5.7	0.24	2.54
barium	EE-6	8	0.021	0.192	0.234	0.243	0.223
	EE-7	2	0.021	0.094	0.050	0.050	0.065
	EE-8	3	0.021	<0.020	0.039	0.034	<0.031
	EE-9	2	0.021	<0.020	<0.020	<0.020	<0.020
boron	EE-6	8	<0.050	<0.050	<0.050	0.349	<0.150
	EE-7	2	<0.050	0.474	<0.050	<0.050	<0.191
	EE-8	3	<0.050	<0.050	<0.050	<0.050	<0.050
	EE-9	2	<0.050	<0.050	<0.050	<0.050	<0.050
calcium	EE-6	8	4.62	60.6	64.7	124	83.1
	EE-7	2	4.62	8.60	34.8	192	78.5
	EE-8	3	4.62	140.5	175.0	59.6	125.0
	EE-9	2	4.62	41.3	6.58	6.57	18.2
chemical oxygen demand (COD)	EE-6	8	48	2,400	1,700	1,900	2,000
	EE-7	2	48	410	330	470	400
	EE-8	3	48	76	310	390	260
	EE-9	2	48	810	<0.05	50	<290
chloride	EE-6	8	<0.05	<0.3	<0.05	7.6	<2.7
	EE-7	2	<0.05	<0.3	<0.05	<0.05	<0.13
	EE-8	3	<0.05	<0.3	10	7.6	<6.0
	EE-9	2	<0.05	<0.3	<0.05	<0.05	<0.13
cobalt	EE-6	8	<0.010	0.030	0.032	0.085	0.049
	EE-7	2	<0.010	0.030	0.031	<0.010	<0.024
	EE-8	3	<0.010	<0.010	<0.010	<0.010	<0.010
	EE-9	2	<0.010	0.028	0.027	<0.010	<0.022

Table V-95 (Continued)

SAMPLING DATA
PLANT EE
TREATED WASTEWATER

Pollutant	Stream Code	Sample Type	Source	Day 1	Day 2	Day 3	Average
dissolved solids	EE-6	8	28	1,430	1,370	6,300	3,030
	EE-7	2	28	2,600	1,390	1,300	1,760
	EE-8	3	28	50	1,810	1,360	1,070
	EE-9	2	28	3,200	58	32	1,100
fluoride	EE-6	8	0.67	1.6	1.6	0.63	1.3
	EE-7	2	0.67	26	330	34	130
	EE-8	3	0.67	1.7	61	23	29
	EE-9	2	0.67	140	0.87	0.34	47
iron	EE-6	8	0.081	1.08	24.0	140	55
	EE-7	2	0.081	6.28	3.44	5.26	4.99
	EE-8	3	0.081	.174	.172	1.56	0.64
	EE-9	2	0.081	0.126	0.043	0.121	0.097
magnesium	EE-6	8	1.68	2.16	3.10	10.5	5.25
	EE-7	2	1.68	87.0	14.0	10.8	37.3
	EE-8	3	1.68	1.03	0.303	0.355	0.563
	EE-9	2	1.68	1.85	1.70	1.70	1.75
manganese	EE-6	8	0.016	0.295	0.384	2.75	1.14
	EE-7	2	0.016	0.367	0.187	0.206	0.253
	EE-8	3	0.016	.026	0.030	<0.010	<0.022
	EE-9	2	0.016	<0.010	<0.010	0.011	<0.010
molybdenum	EE-6	8	0.030	0.464	0.236	0.226	0.309
	EE-7	2	0.030	0.088	0.054	0.047	0.063
	EE-8	3	0.030	0.048	0.061	0.062	0.057
	EE-9	2	0.030	0.033	<0.020	<0.020	<0.024
phosphate	EE-6	8	818	58	30	100	63
	EE-7	2	818	<4	190	140	<110
	EE-8	3	818	<4.0	11	880	<300
	EE-9	2	818	1,000	<4	20	<340

Table V-95 (Continued)

SAMPLING DATA
PLANT EE
TREATED WASTEWATER

Pollutant	Stream Code	Sample Type	Source	Day 1	Day 2	Day 3	Average
sulfate	EE-6	8	21	2,100	2,900	5,600	3,535
	EE-7	2	21	1,200	760	920	960
	EE-8	3	21	40	800	4.5	282
	EE-9	2	21	2,500	16	7.4	841
tin	EE-6	8	<0.020	<0.020	0.034	<0.020	<0.020
	EE-7	2	<0.020	<0.020	<0.020	<0.020	<0.020
	EE-8	3	<0.020	<0.020	<0.020	<0.020	<0.020
	EE-9	2	<0.020	<0.020	<0.020	<0.020	<0.020
titanium	EE-6	8	<0.010	<0.010	0.020	0.067	<0.030
	EE-7	2	<0.010	0.031	0.019	0.018	0.023
	EE-8	3	<0.010	<0.010	<0.010	<0.010	<0.010
	EE-9	2	<0.010	<0.010	<0.010	<0.010	<0.010
total organic carbon (TOC)	EE-6	8	<1	550	615	4,100	1,755
	EE-7	2	<1	94	150	120	121
	EE-8	3	<1	2.1	92	120	71
	EE-9	2	<1	290	1.7	<1	98
total solids (TS)	EE-6	8	30	4,300	4,500	8,400	5,733
	EE-7	2	30	2,600	2,000	1,720	2,107
	EE-8	3	30	150	2,000	1,500	1,217
	EE-9	2	30	3,400	58	60	1,743
vanadium	EE-6	8	<0.020	<0.020	<0.020	0.046	<0.030
	EE-7	2	<0.020	<0.020	<0.020	<0.020	<0.020
	EE-8	3	<0.020	<0.020	<0.020	<0.020	<0.020
	EE-9	2	<0.020	<0.020	<0.020	<0.020	<0.020
yttrium	EE-6	8	<0.020	<0.020	<0.020	<0.020	<0.020
	EE-7	2	<0.020	<0.020	<0.020	<0.020	<0.020
	EE-8	3	<0.020	<0.020	<0.020	<0.020	<0.020
	EE-9	2	<0.020	<0.020	<0.020	<0.020	<0.020

Table V-95 (Continued)

SAMPLING DATA
PLANT EE
TREATED WASTEWATER

Pollutant	Stream Code	Sample Type	Source	Day 1	Day 2	Day 3	Average
Conventional							
oil and grease	EE-6	8	3	310	170	22	167
	EE-7	2	3	4.5	160	73	79
	EE-8	3	3	3.0	<1	<1	<2
	EE-9	2	3	150	<1	4	<52
pH (standard units)	EE-6	8	6.05	1.70	1.89	1.94	
	EE-7	2	6.05	11.30	4.76	4.82	
	EE-8	3	6.05	11.00	11.62	11.03	
	EE-9	2	6.05	2.72	9.12	6.15	
suspended solids	EE-6	8	3	67	40.3	52	53
	EE-7	2	3	67	62	470	200
	EE-8	3	3	1.0	65	70	45
	EE-9	2	3	160	<1	2.3	<54
[illegible]	[illegible]	[illegible]	[illegible]	[illegible]	[illegible]	[illegible]	[illegible]
[illegible]	[illegible]	[illegible]	[illegible]	[illegible]	[illegible]	[illegible]	[illegible]
[illegible]	[illegible]	[illegible]	[illegible]	[illegible]	[illegible]	[illegible]	[illegible]
[illegible]	[illegible]	[illegible]	[illegible]	[illegible]	[illegible]	[illegible]	[illegible]
[illegible]	[illegible]	[illegible]	[illegible]	[illegible]	[illegible]	[illegible]	[illegible]
[illegible]	[illegible]	[illegible]	[illegible]	[illegible]	[illegible]	[illegible]	[illegible]

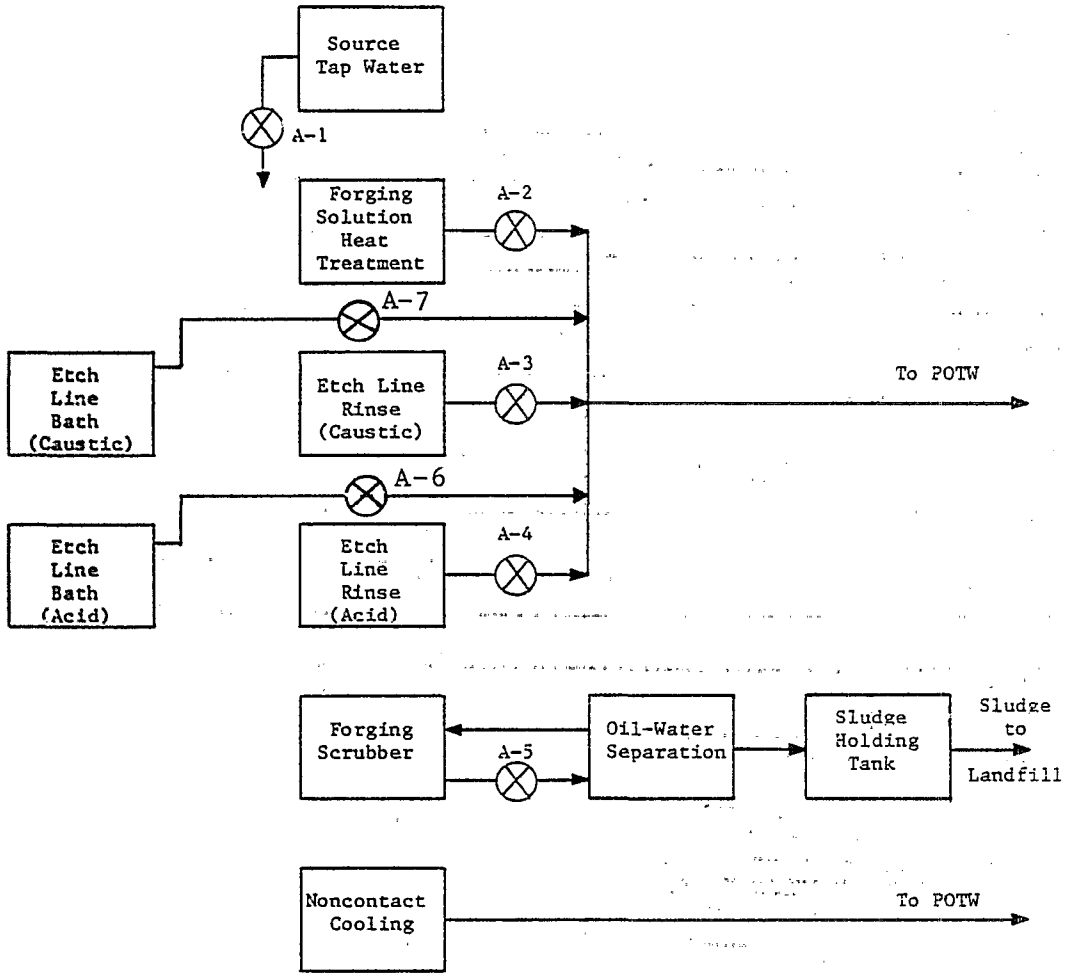

Figure V-1

WASTEWATER SOURCES AT PLANT A

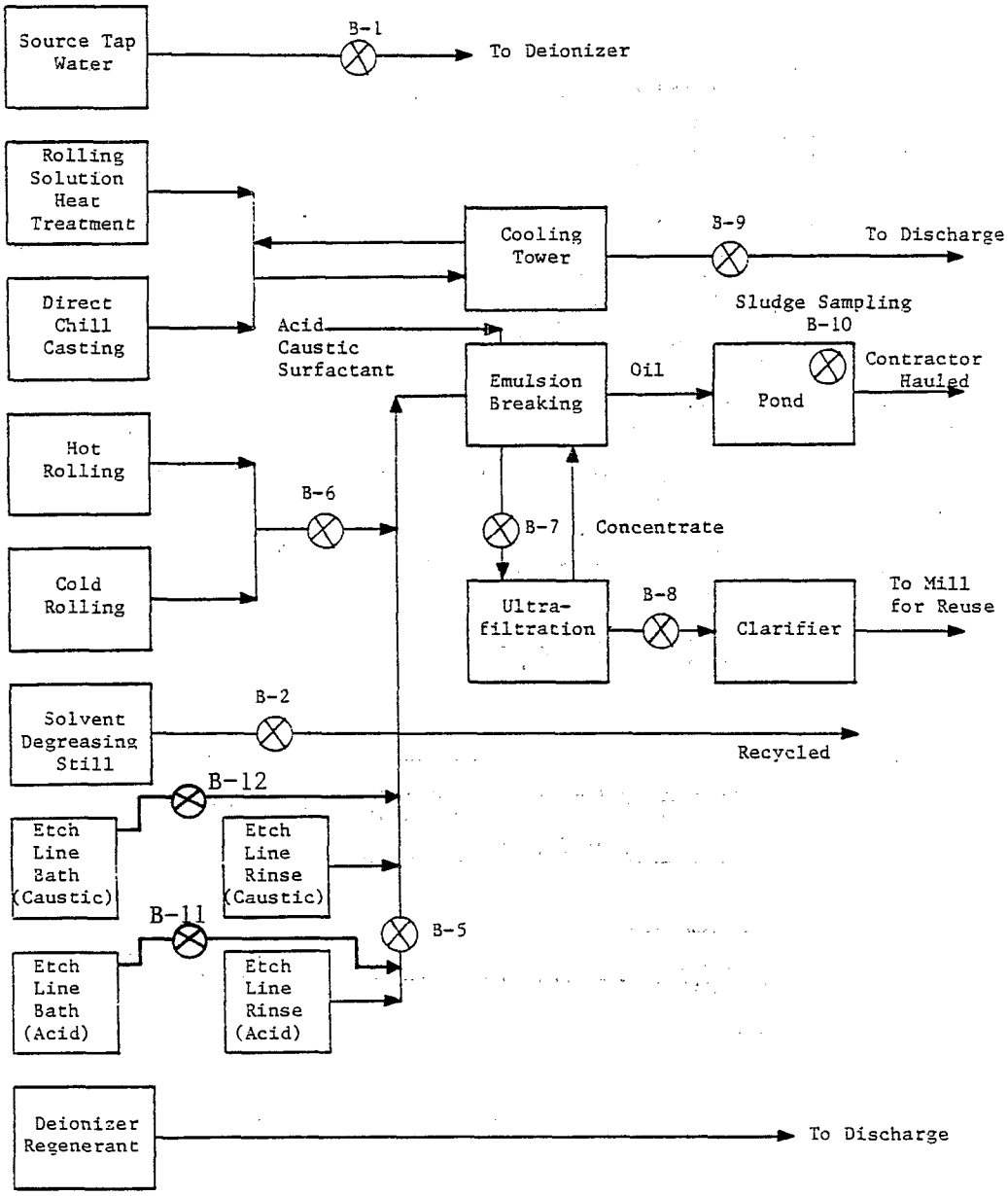

Figure V-2

WASTEWATER SOURCES AT PLANT B

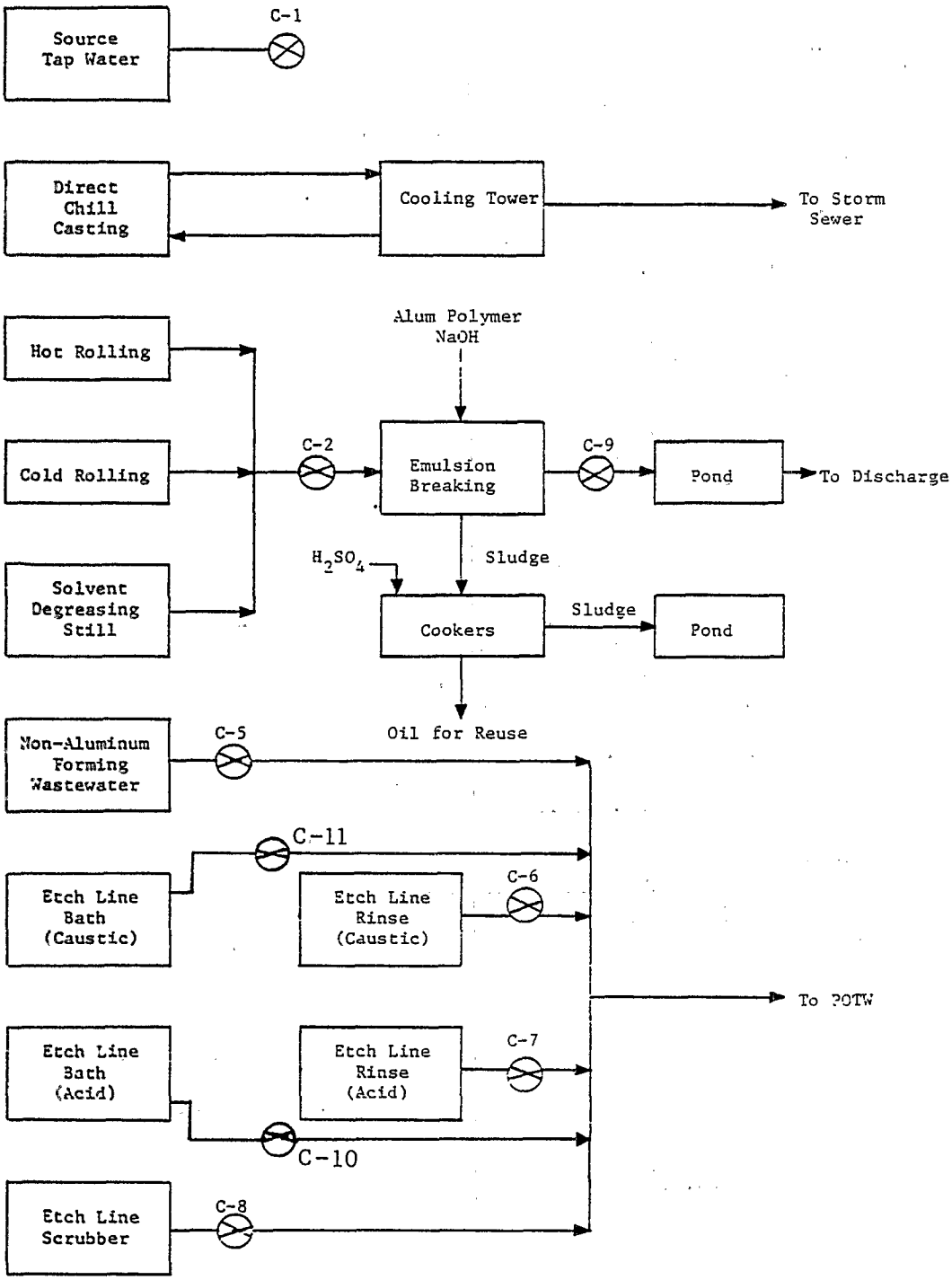

Figure V-3

WASTEWATER SOURCES AT PLANT C

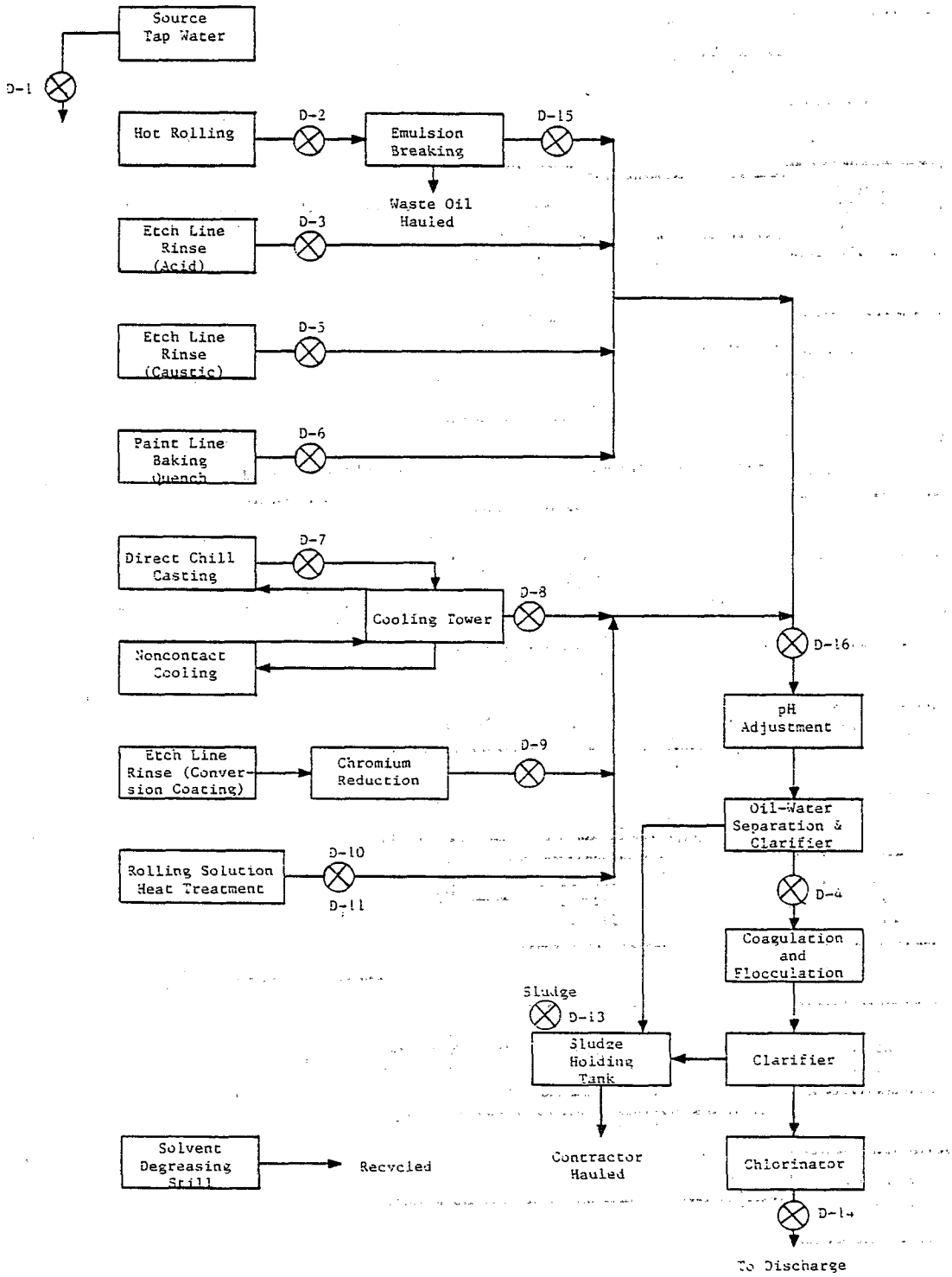

Figure V-4

WASTEWATER SOURCES AT PLANT D

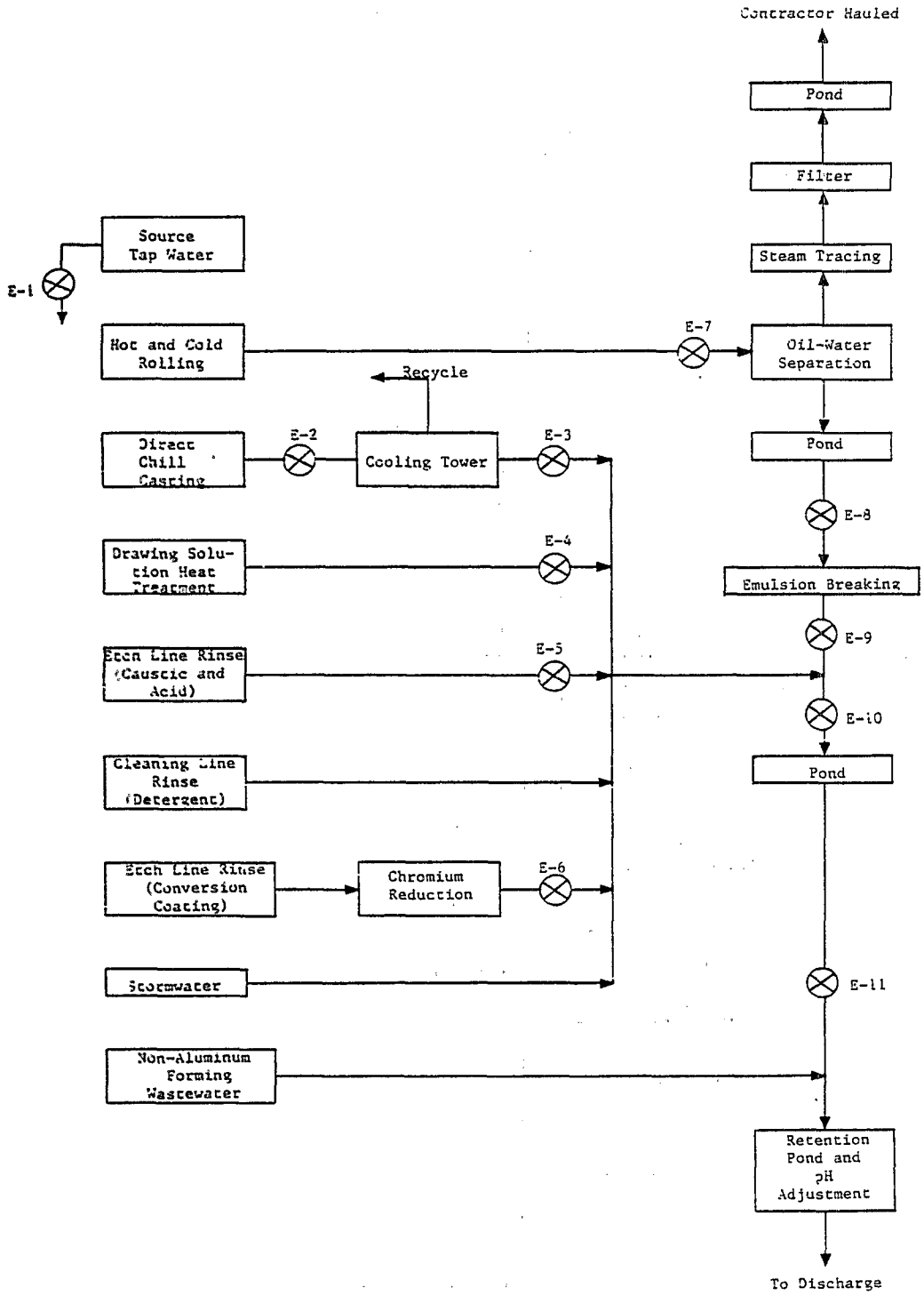

Figure V-5

WASTEWATER SOURCES AT PLANT E

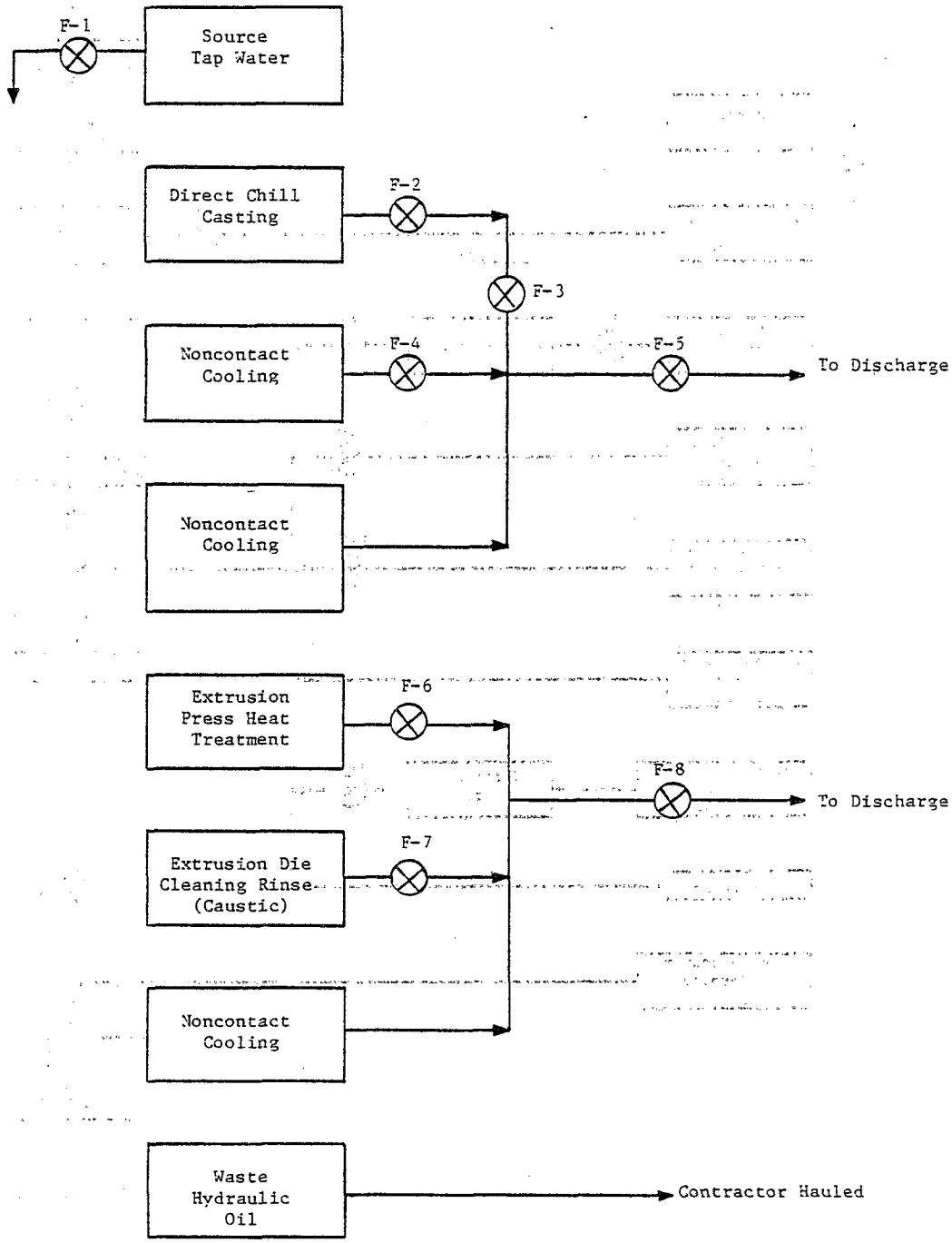

Figure V-6

WASTEWATER SOURCES AT PLANT F

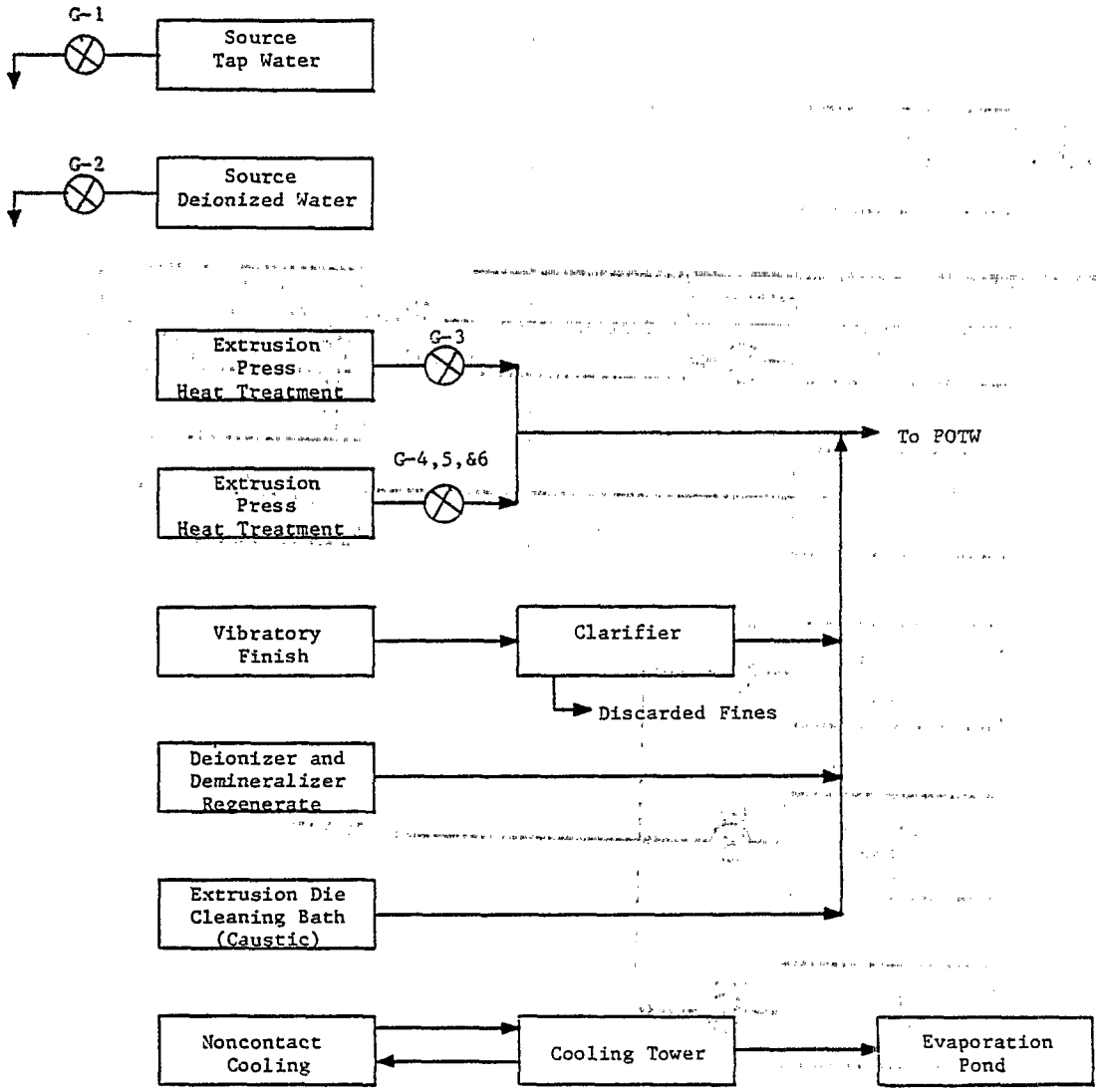

Figure V-7

WASTEWATER SOURCES AT PLANT G

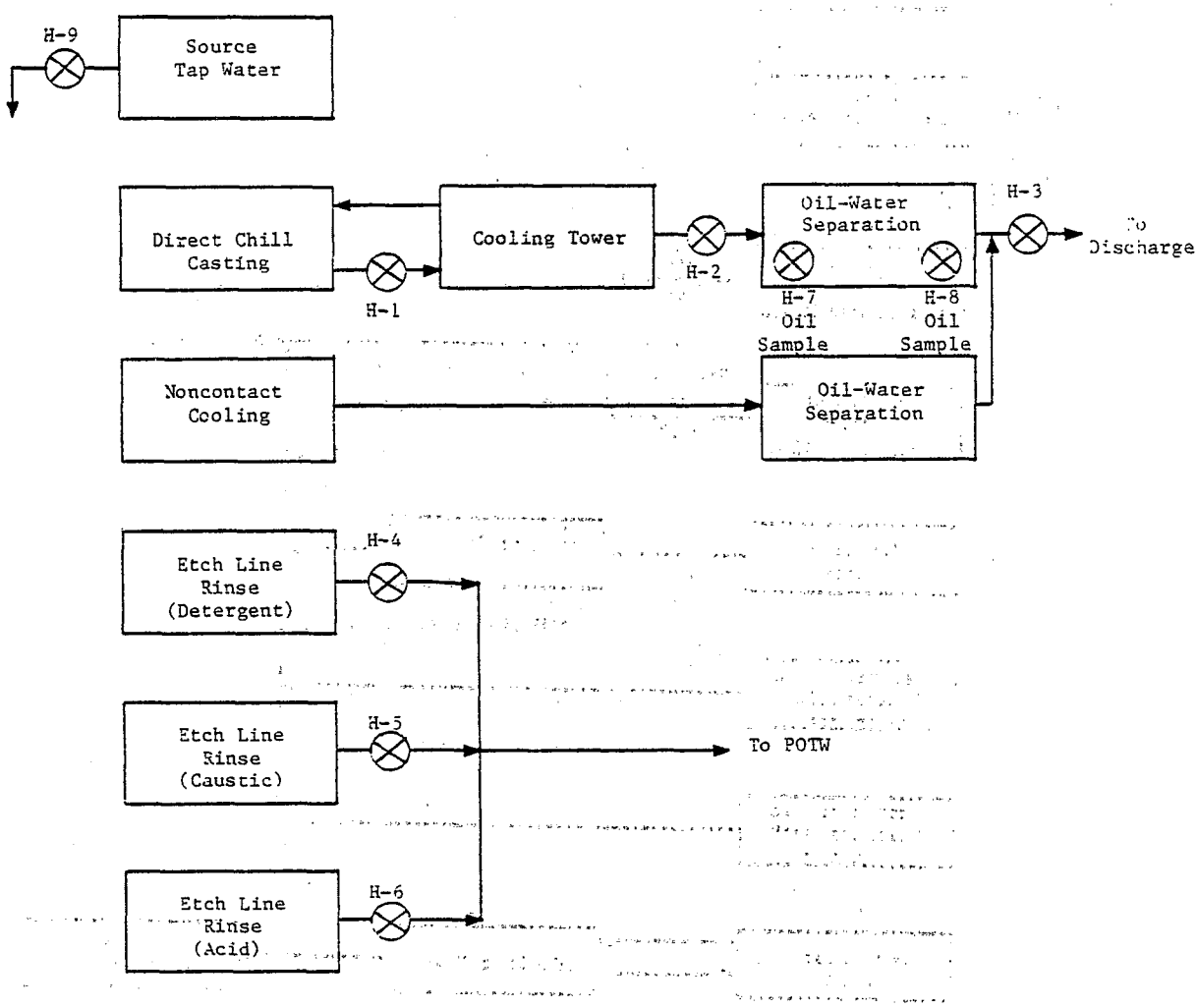

Figure V-8

WASTEWATER SOURCES AT PLANT H

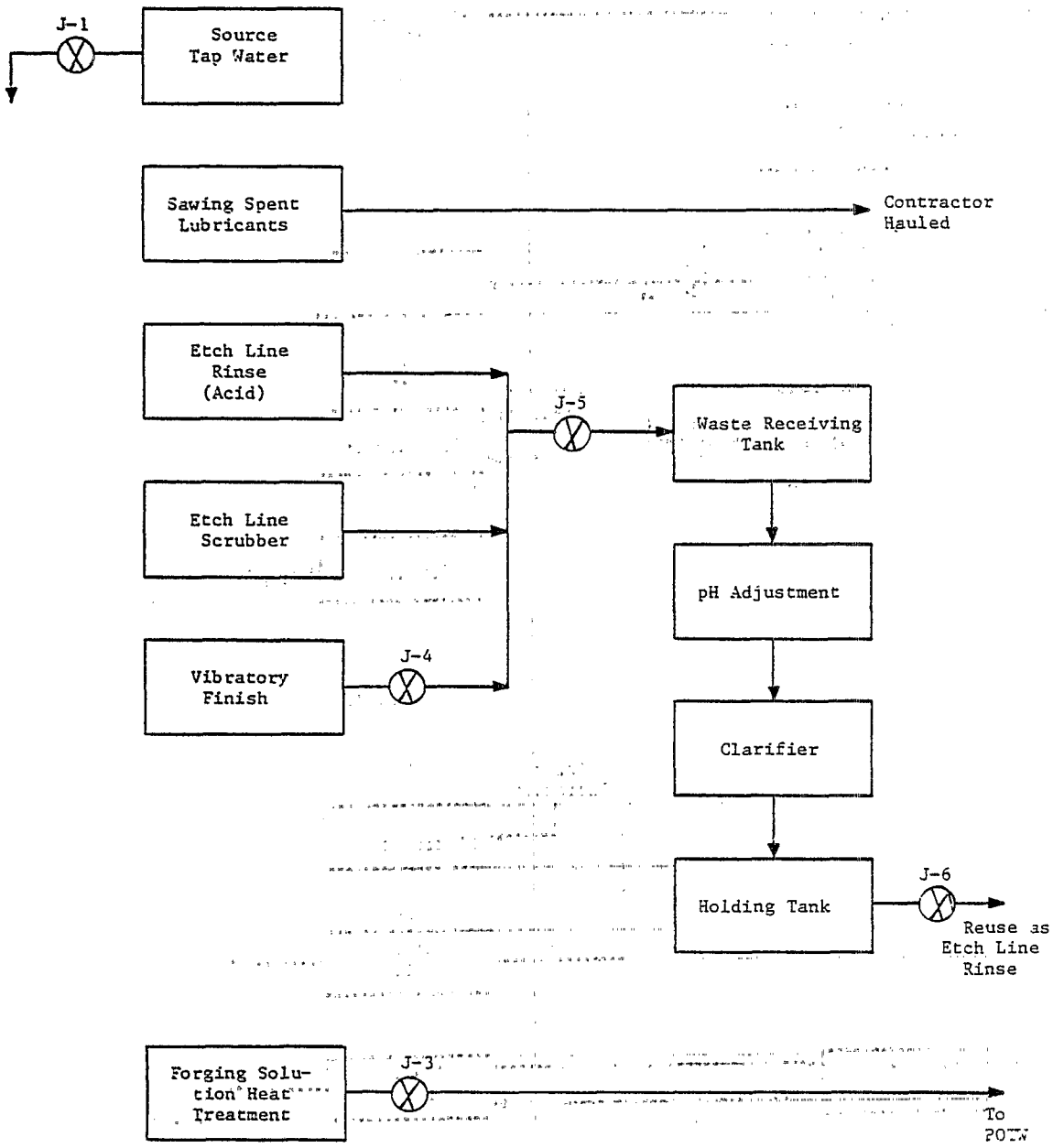

Figure V-9

WASTEWATER SOURCES AT PLANT J

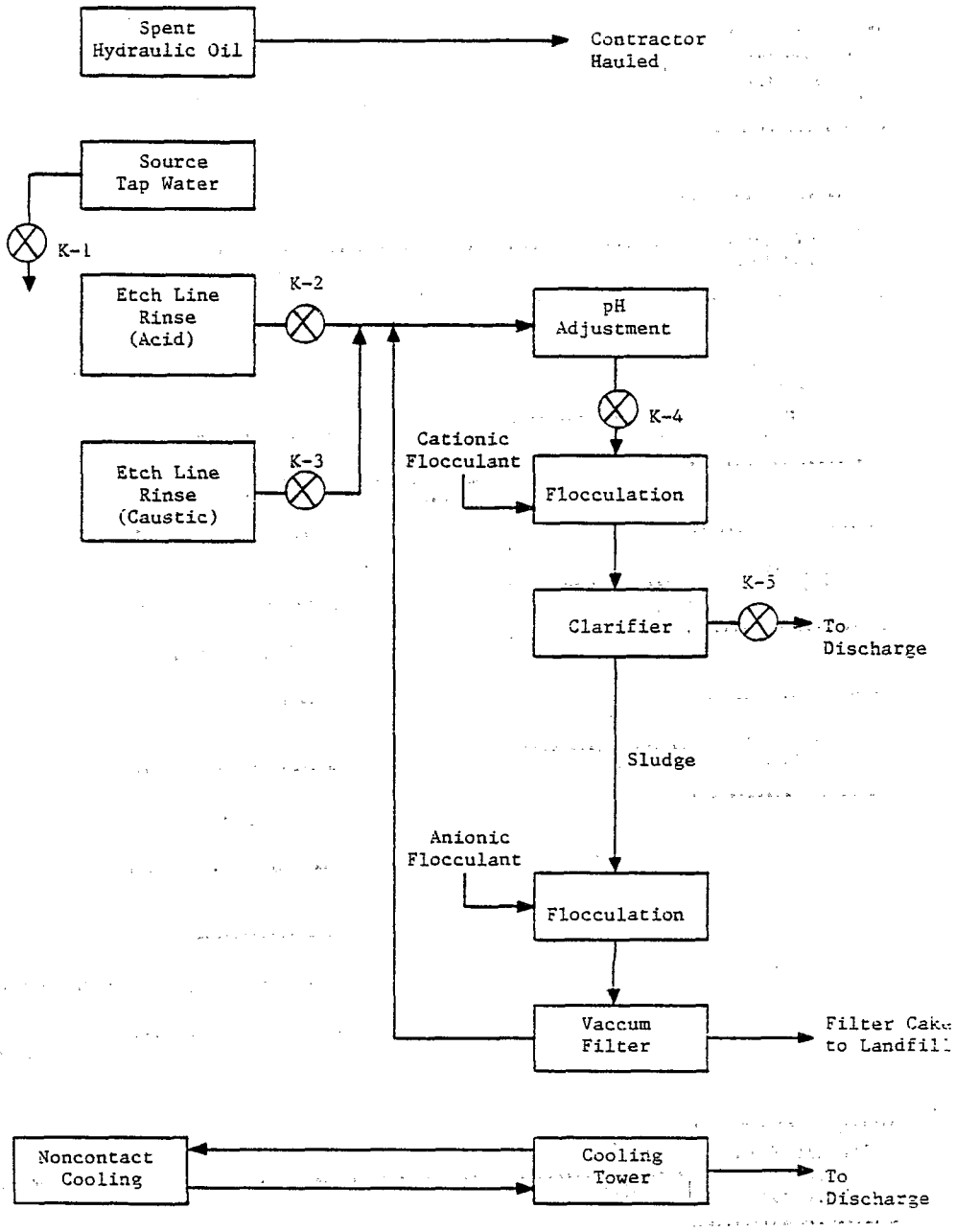

Figure V-10

WASTEWATER SOURCES AT PLANT K

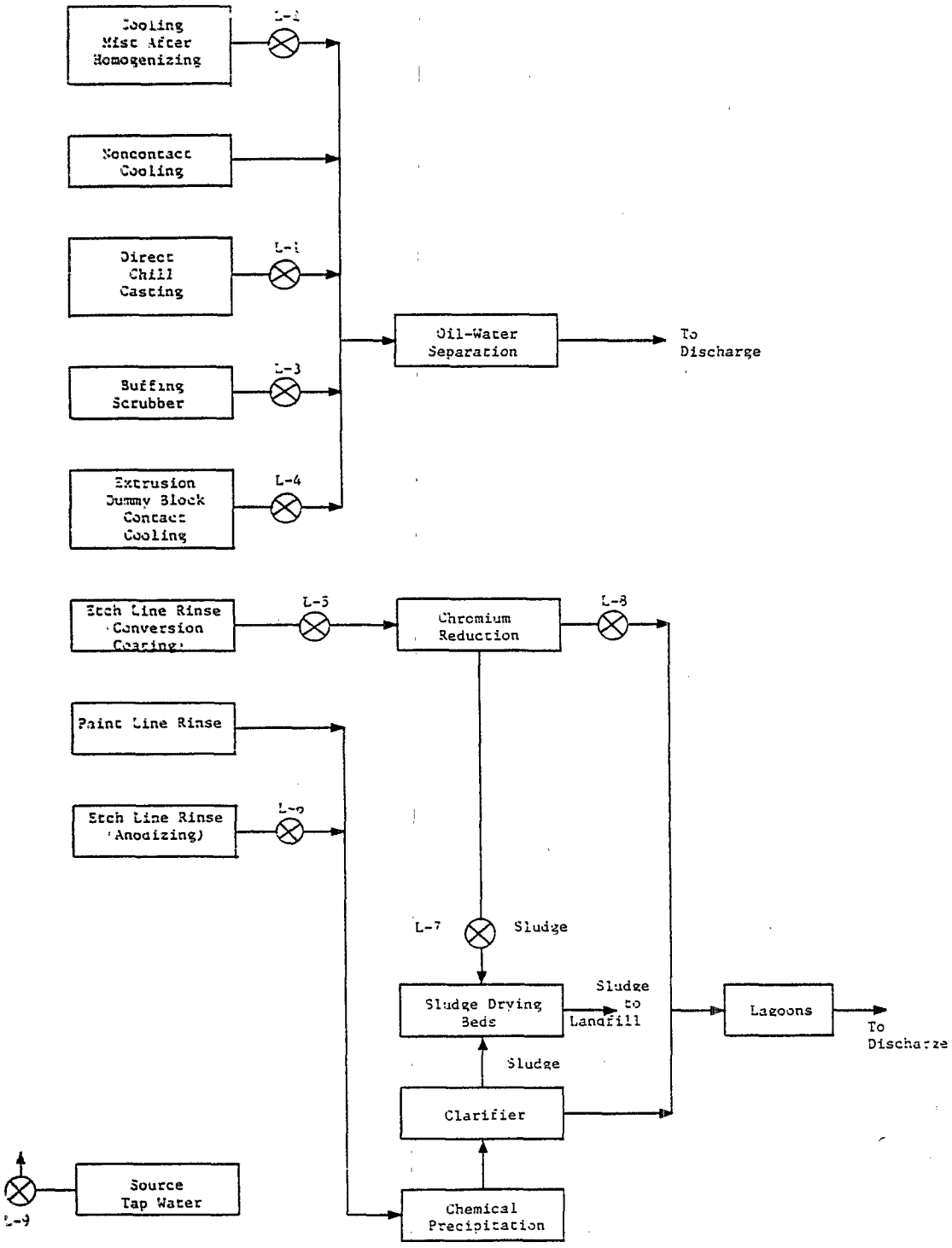

Figure V-11

WASTEWATER SOURCES AT PLANT L

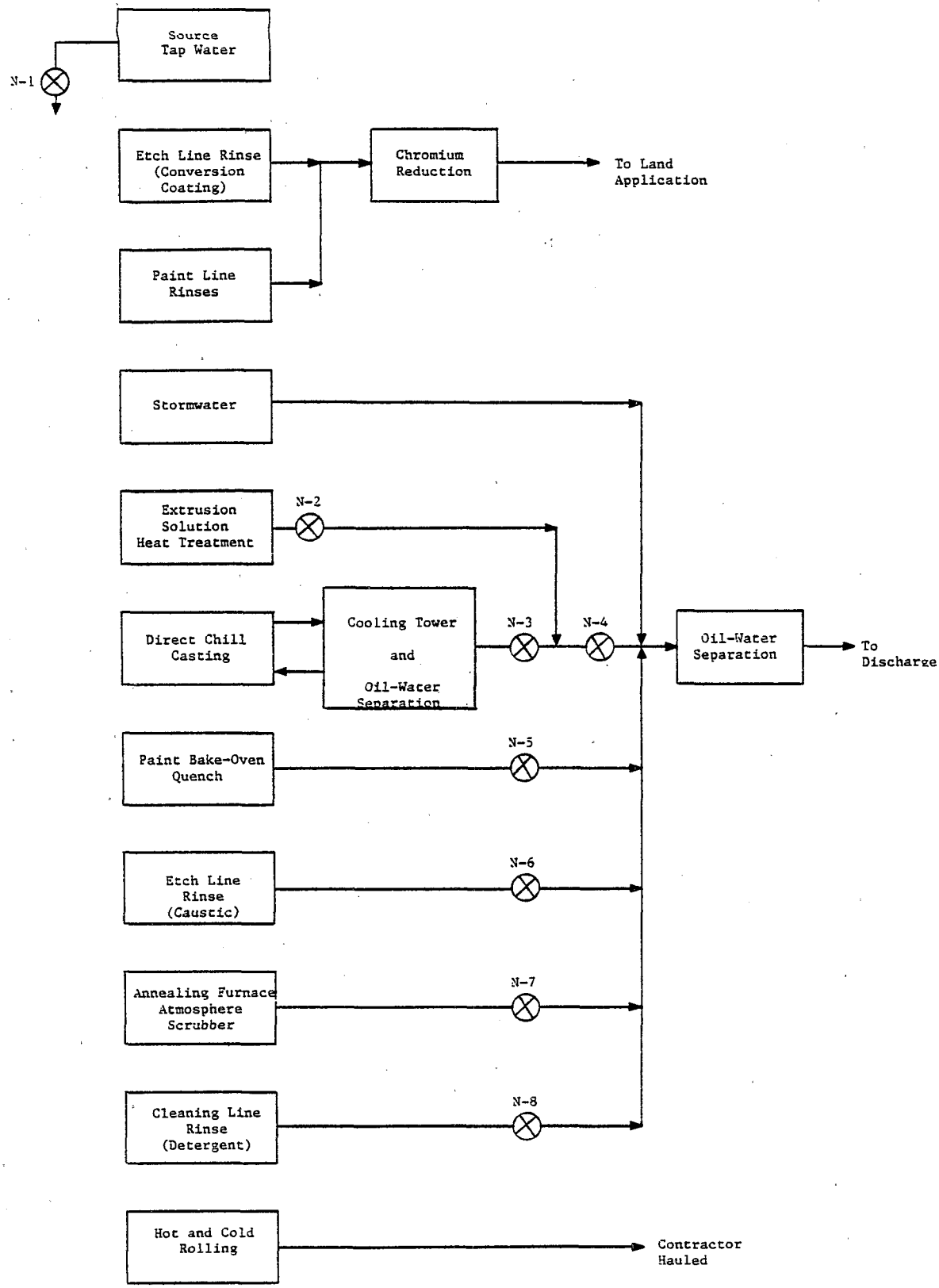

Figure V-12

WASTEWATER SOURCES AT PLANT N

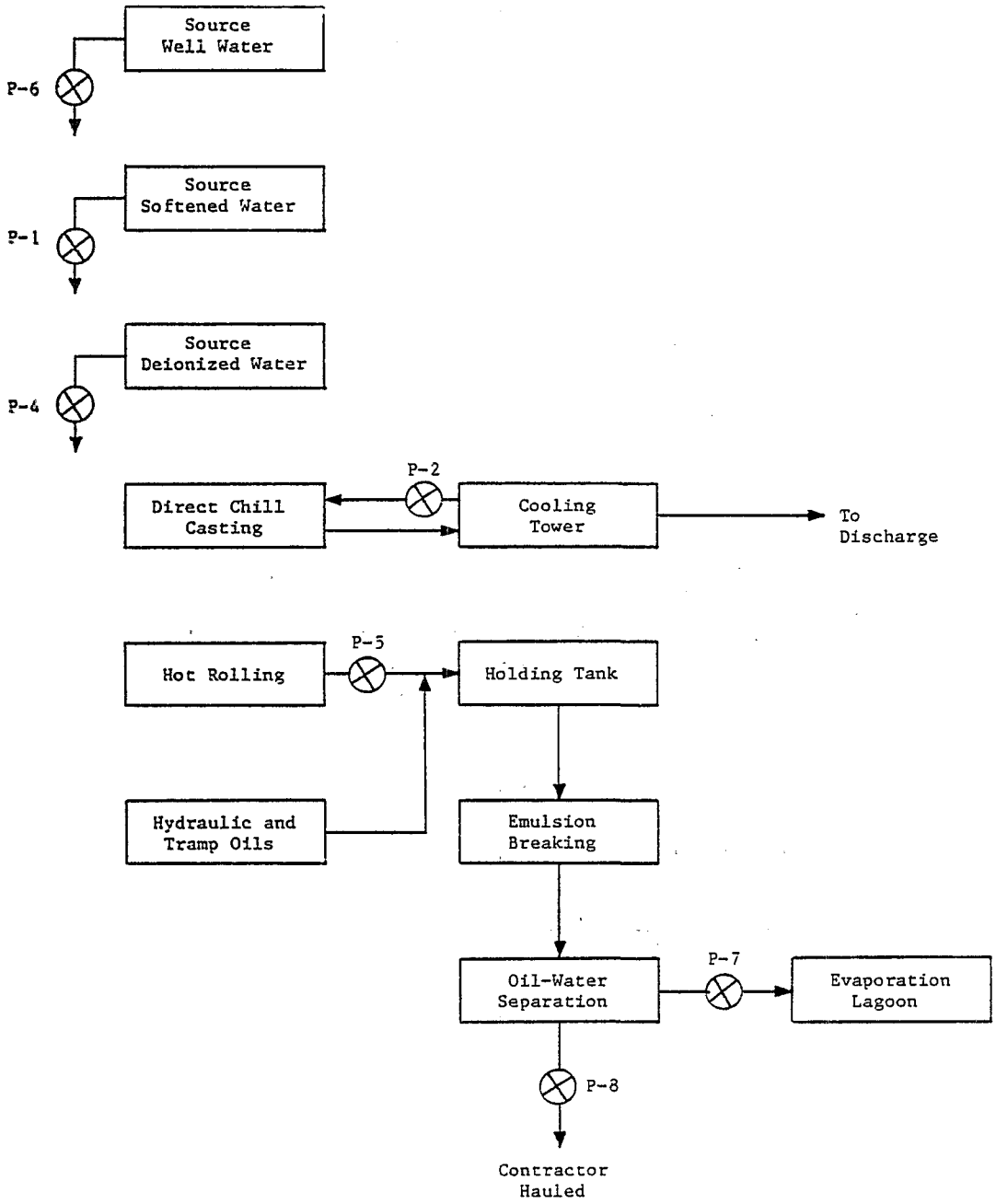

Figure V-13

WASTEWATER SOURCES AT PLANT P

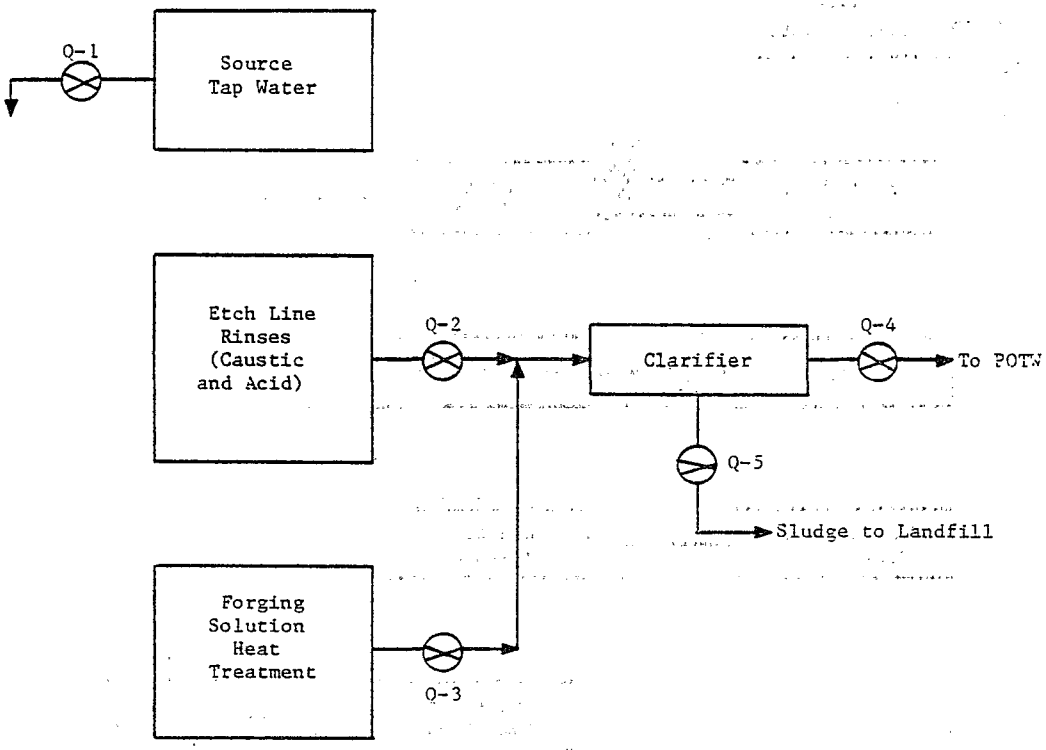

Figure V-14

WASTEWATER SOURCES AT PLANT Q

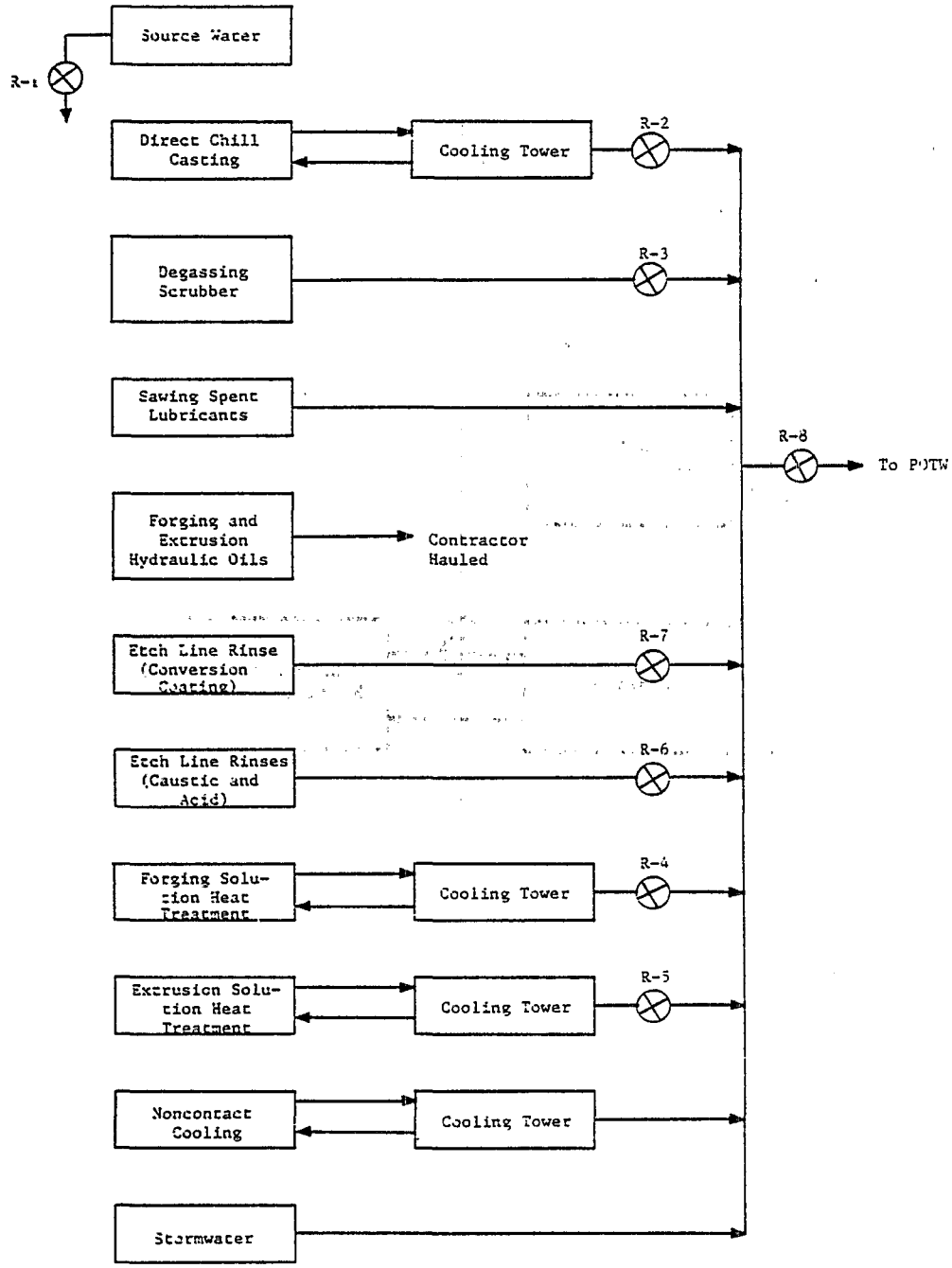

Figure V-15

WASTEWATER SOURCES AT PLANT R

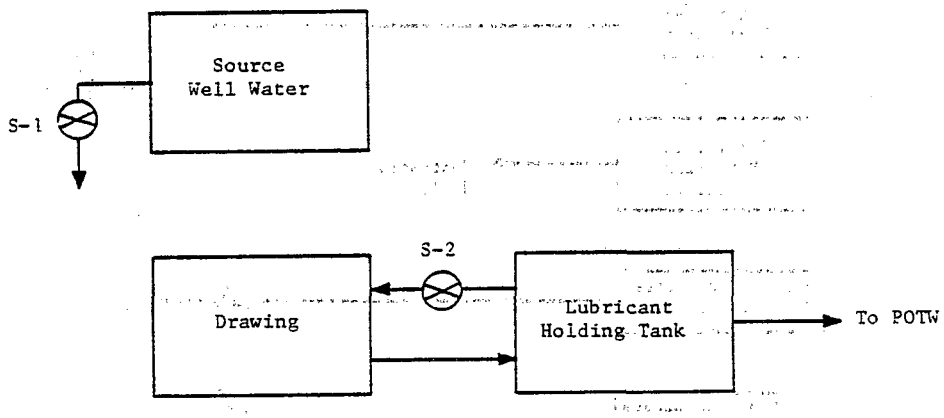

Figure V-16

WASTEWATER SOURCES AT PLANT S

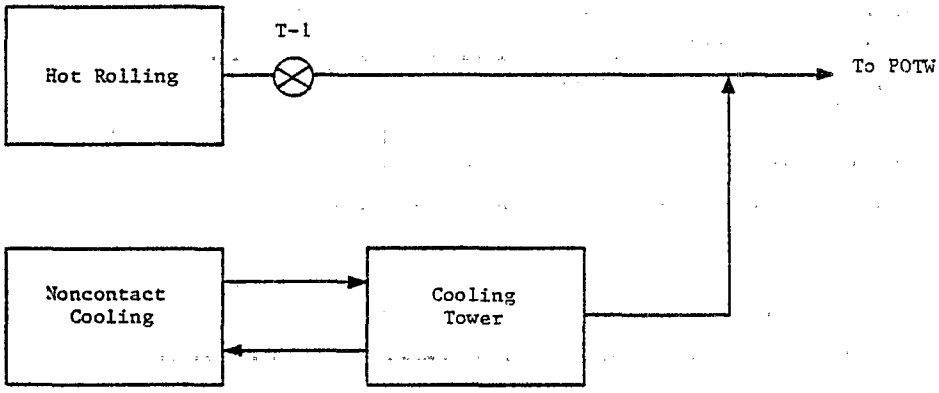

Figure V-17

WASTEWATER SOURCES AT PLANT T

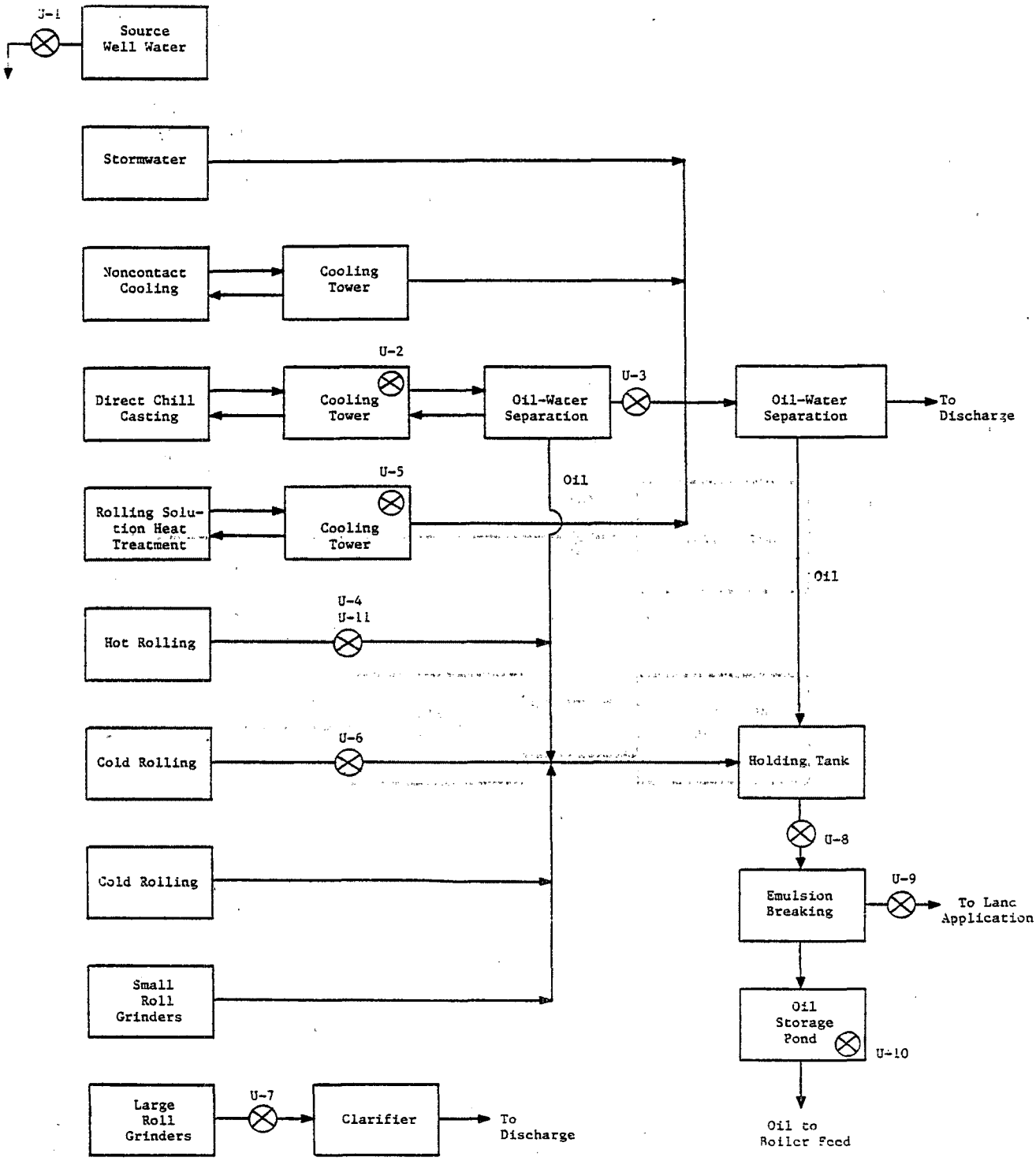

Figure V-18

WASTEWATER SOURCES AT PLANT U

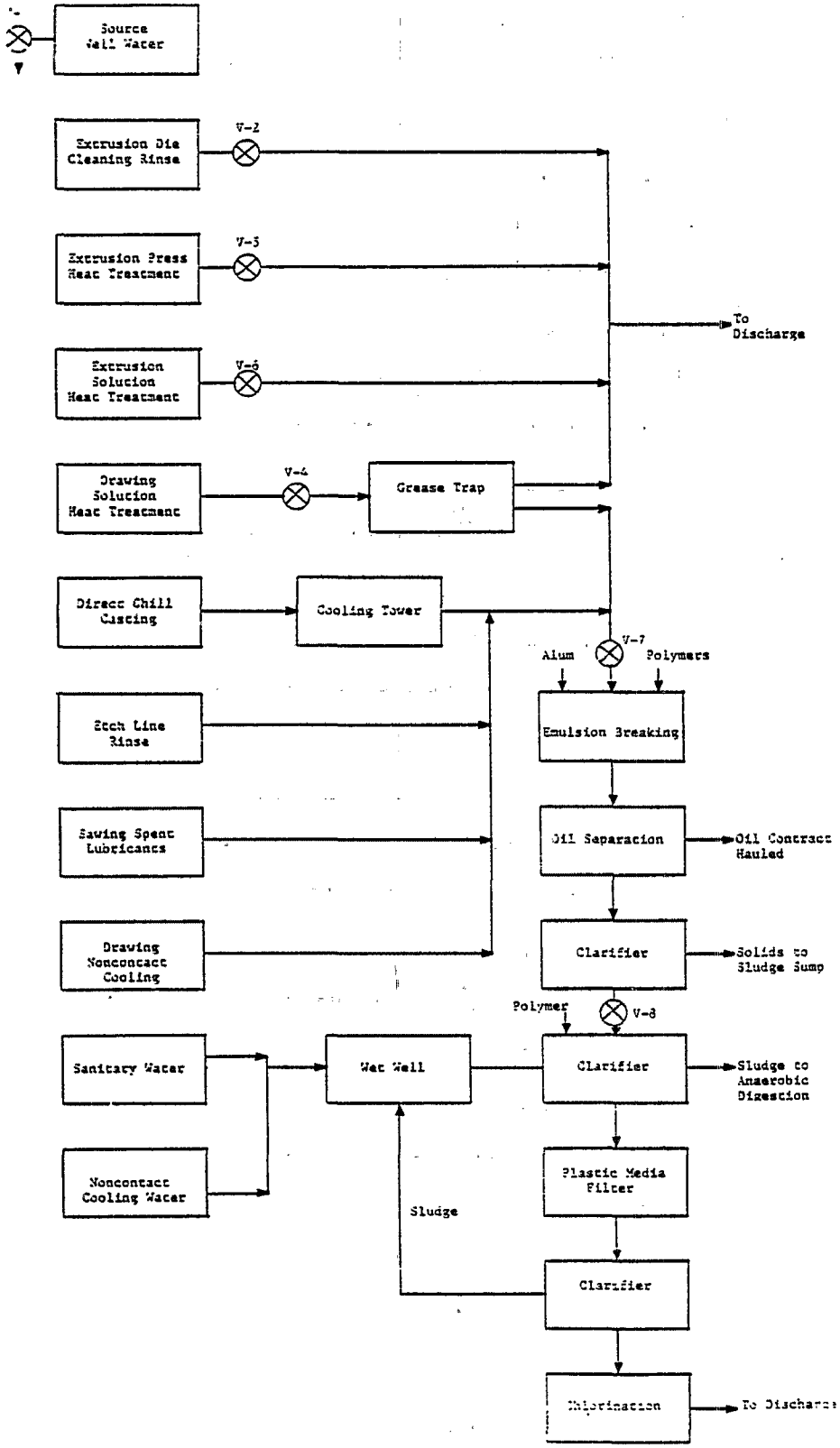

Figure V-19

WASTEWATER SOURCES AT PLANT V

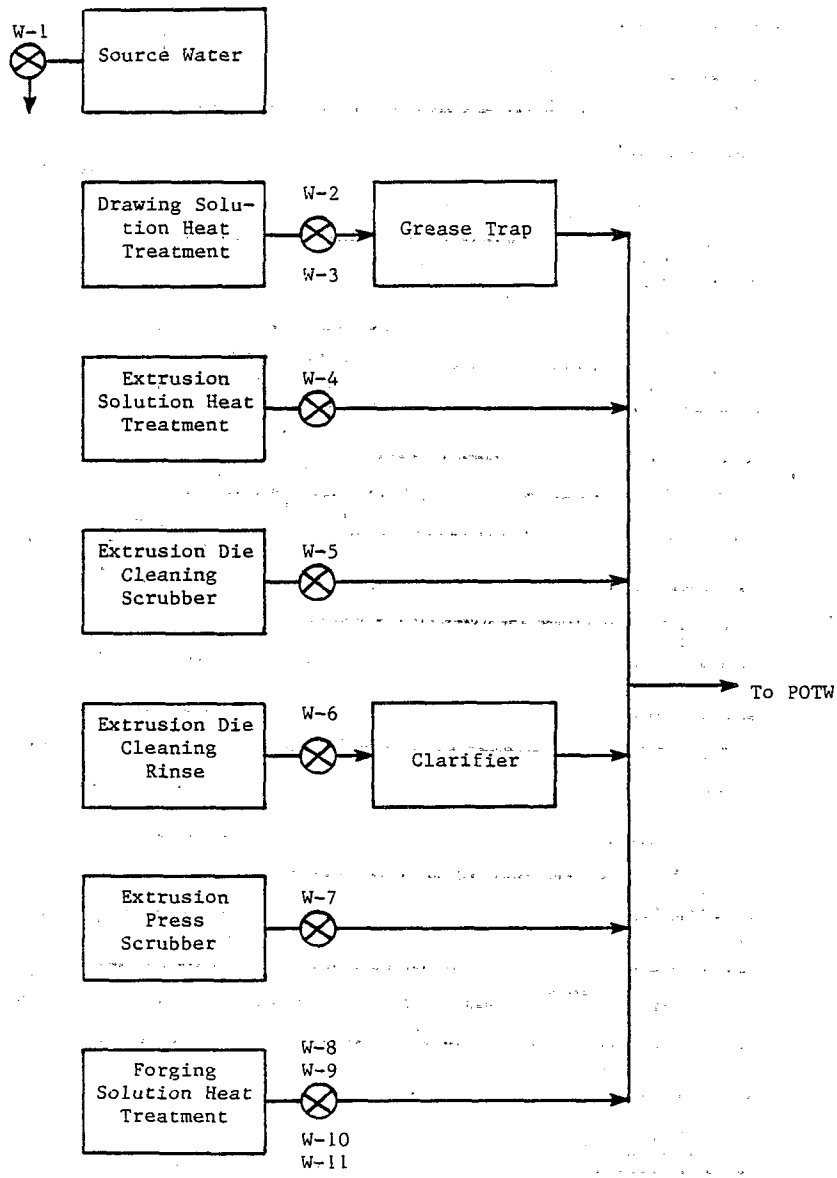

Figure V-20
WASTEWATER SOURCES AT PLANT W

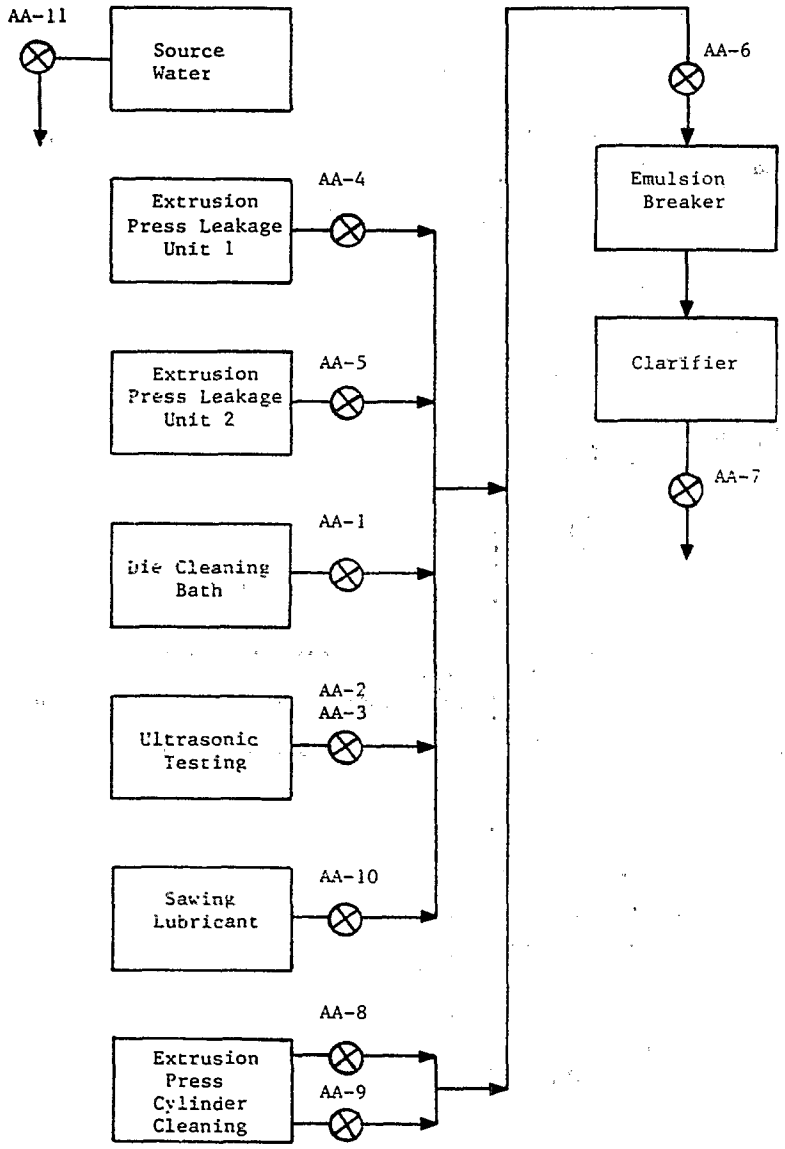

Figure V-21

WASTEWATER SOURCES AT PLANT AA

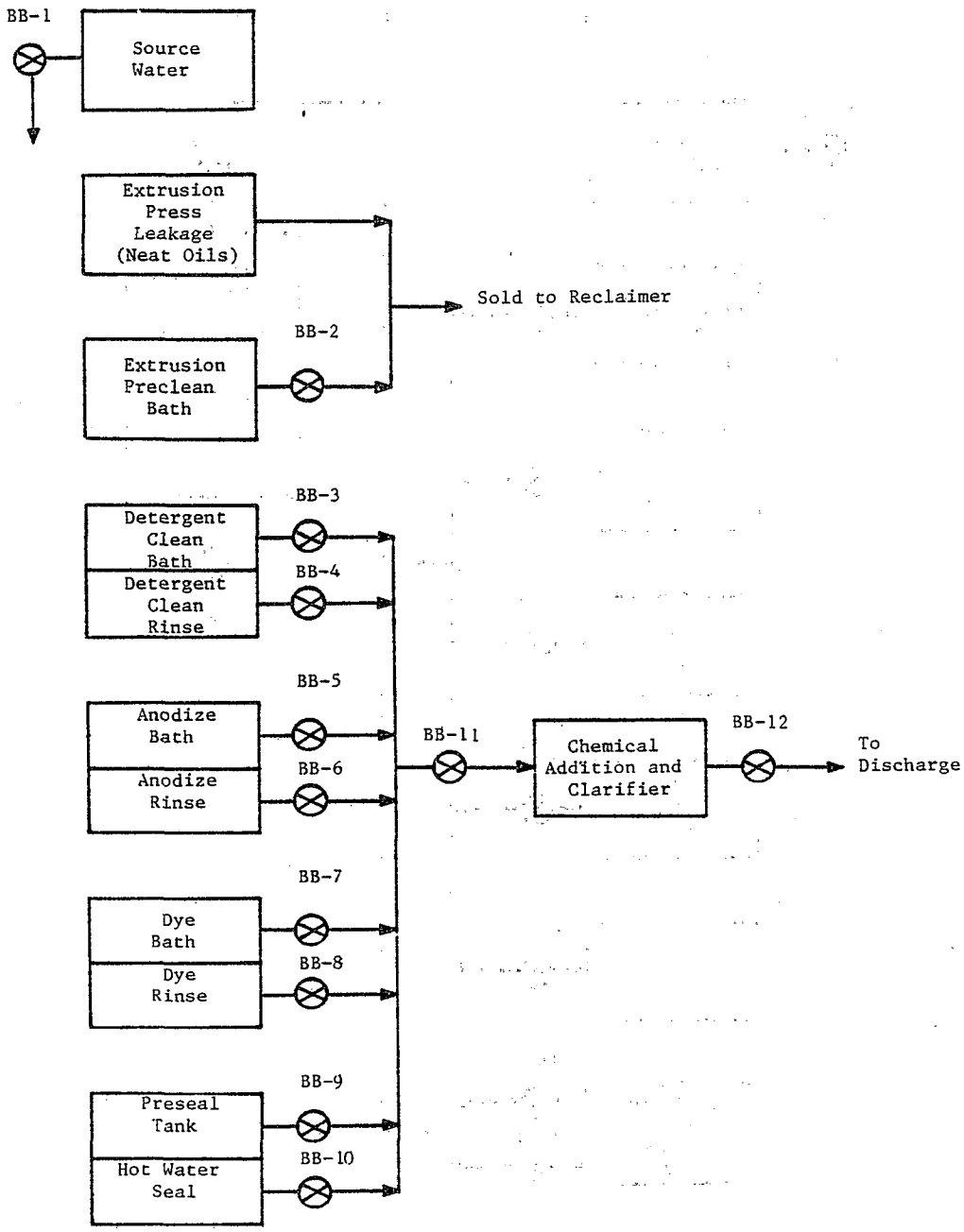

Figure V-22

WASTEWATER SOURCES AT PLANT BB

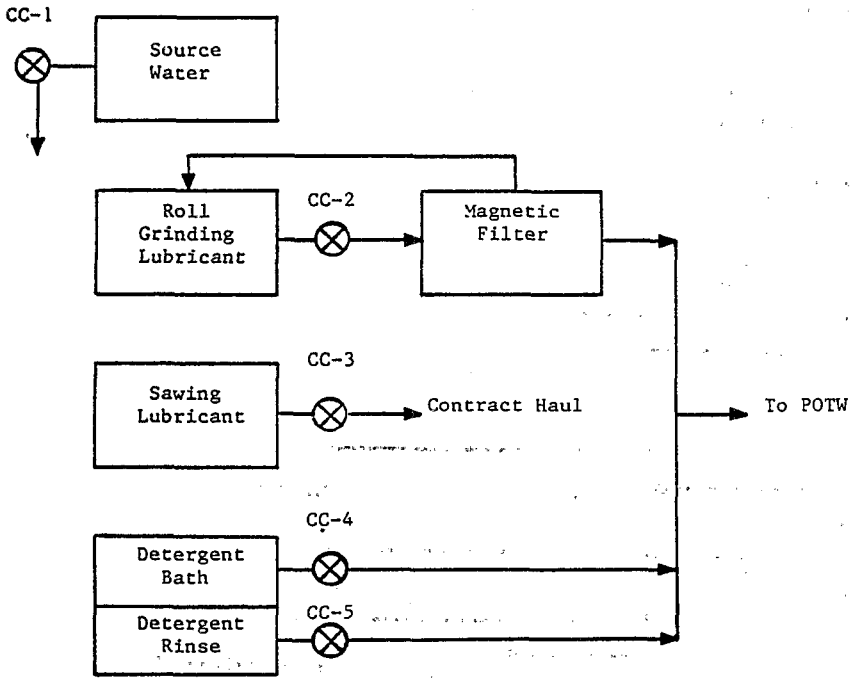

Figure V-23

WASTEWATER SOURCES AT PLANT CC

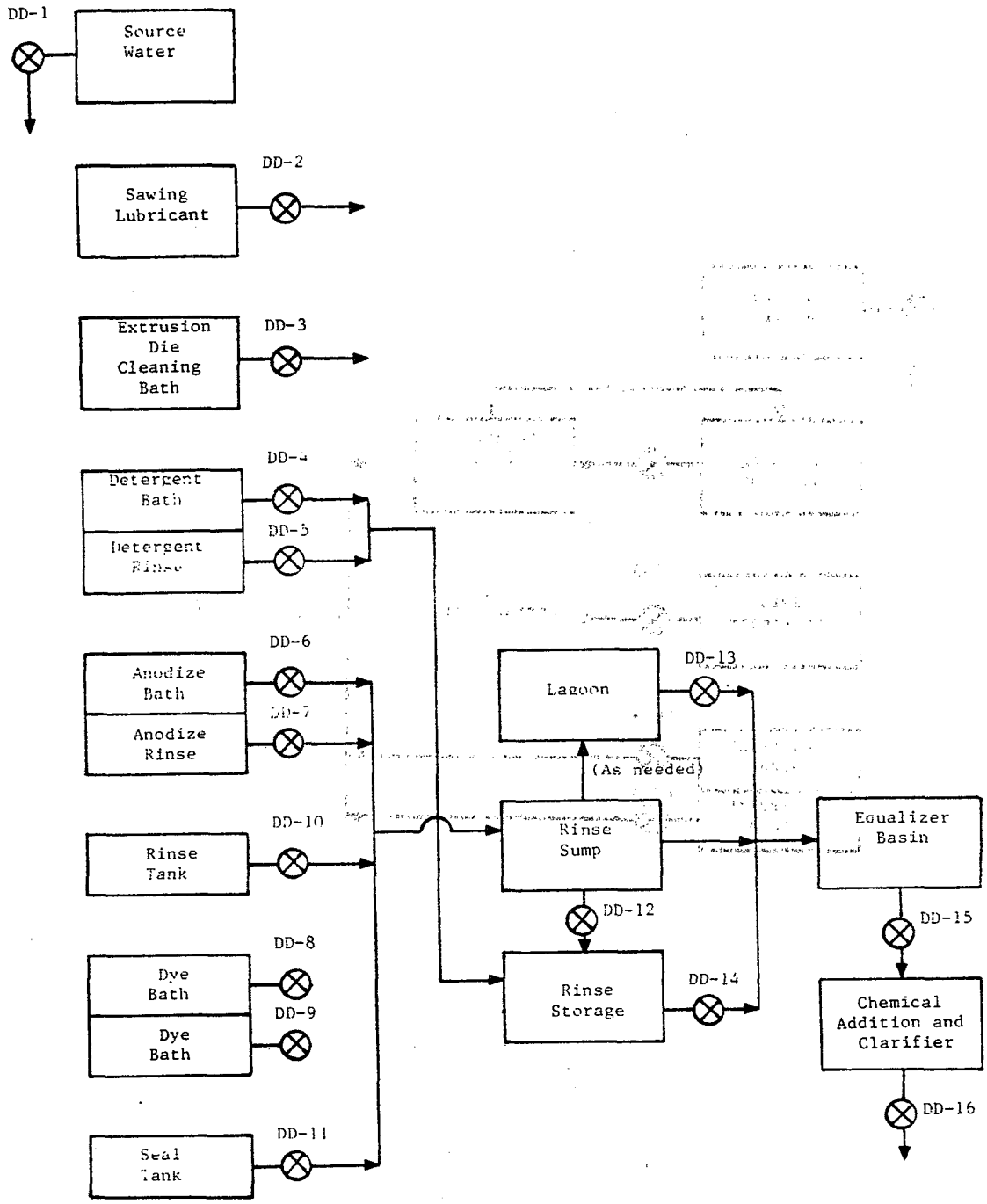

Figure V-24

WASTEWATER SOURCES AT PLANT DD

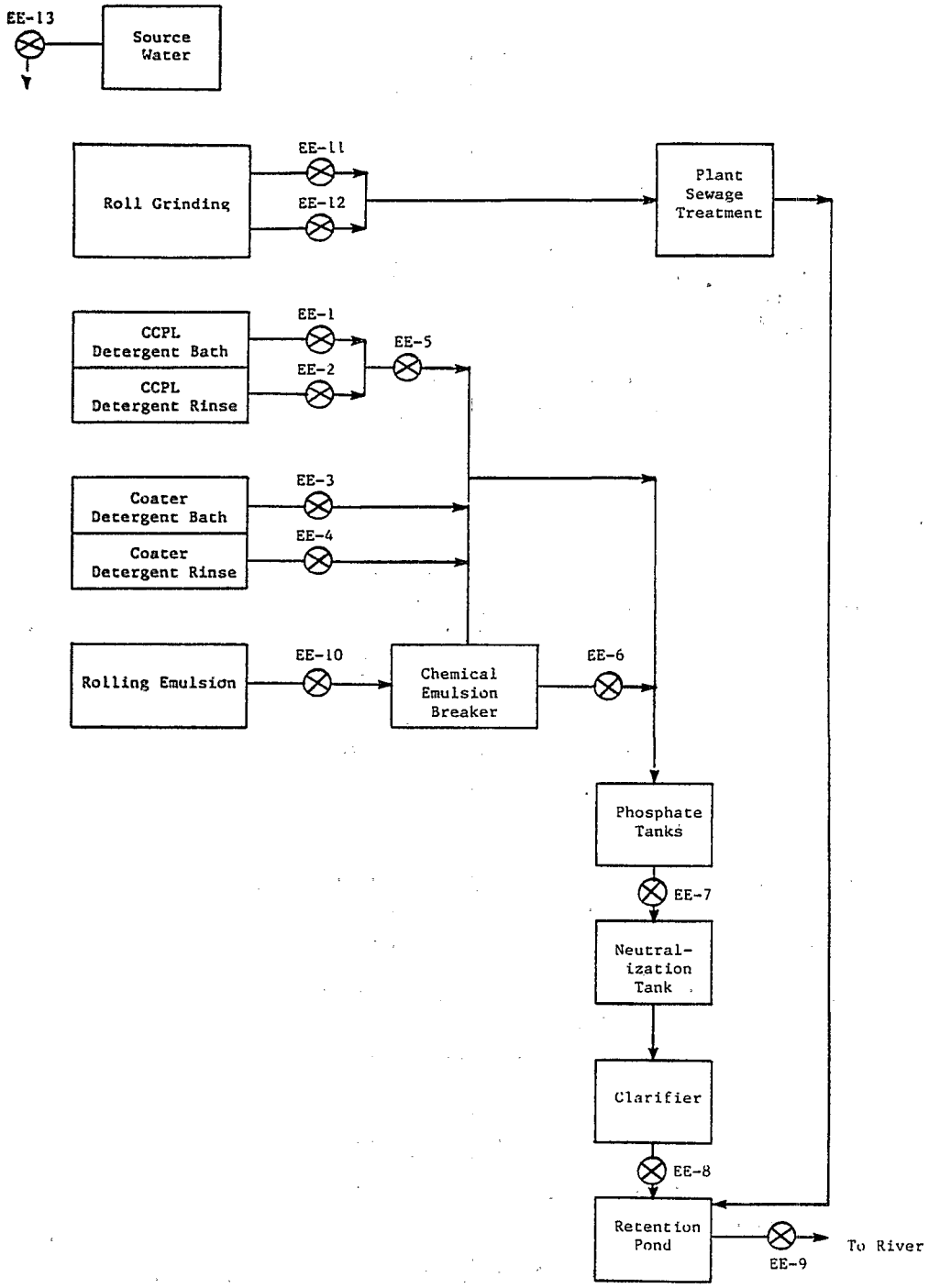

Figure V-25
WASTEWATER SOURCES AT PLANT EE

Section VI

SELECTION OF POLLUTANT PARAMETERS

The Agency has studied aluminum forming wastewaters to determine the presence or absence of toxic, conventional and selected non conventional pollutants. The toxic pollutants and nonconven tional pollutants are subject to BAT effluent limitations and guidelines. Conventional pollutants are considered in establish ing BPT, BCT, and NSPS limitations.

One hundred and twenty-nine toxic pollutants (known as the 129 priority pollutants) were studied pursuant to the requirements of the Clean Water Act of 1977 (CWA). These pollutant parameters, which are listed in Table VI-1, are members of the 65 pollutants and classes of toxic pollutants referred to as Table 1 in Section 307(a)(1) of the CWA.

From the original list of 129 pollutants, three pollutants have been deleted in two separate amendments to 40 CFR Subchapter N, Part 401. Dichlorodifluoromethane and trichlorofluoromethane were deleted first (46 FR 2266, January 8, 1981) followed by the deletion of bis-(chloromethyl) ether (46 FR 10723, February 4, 1981). The Agency has concluded that deleting these compounds will not compromise adequate control over their discharge into the aquatic environment and that no adverse effects on the aquatic environment or on human health will occur as a result of deleting them from the list of toxic pollutants.

Past studies by EPA and others have identified many nontoxic pollutant parameters useful in characterizing industrial wastewaters and in evaluating treatment process removal efficiencies. Certain of these and other parameters may also be selected as reliable indicators of the presence of specific toxic pollutants. For these reasons, a number of nontoxic pollutants were also studied for the aluminum forming category.

The conventional pollutants considered (total suspended solids, oil and grease, and pH) traditionally have been studied to characterize industrial wastewaters. These parameters are especially useful in evaluating the effectiveness of wastewater treatment processes.

Several nonconventional pollutants were considered. These included aluminum, chemical oxygen demand (COD), phenols (total), and total organic carbon (TOC). In addition, calcium, magnesium, alkalinity, total dissolved solids and sulfate were measured to provide data to evaluate the cost of chemical precipitation and sedimentation treatment of certain wastewater streams. Of these

pollutants, only the pollutant aluminum was considered for regulation in establishing effluent limitations guidelines, since it is found in significant concentrations in aluminum forming process wastewater streams and is removed by the BAT model treatment technology. It is found in all aluminum forming contact waste water streams because it is the metal being processed.

RATIONALE FOR SELECTION OF POLLUTANT PARAMETERS

The Settlement Agreement in Natural Resources Defense Council, Inc. vs. Train, 8 ERC 2120 (D.D.C. 1976), modified 12 ERC 1833 (D.D.C. 1979), which preceded the Clean Water Act, contains provisions authorizing the exclusion from regulation in certain instances of particular pollutants, categories, and subcategories.

Paragraph 8(a)(iii) of the Settlement Agreement allows the Administrator to exclude from regulation toxic pollutants not detectable by Section 304(h) analytical methods or other state-of-the- art methods. Pollutants that were never detected, or that were never found above their analytical quantification level, were therefore eliminated from consideration. The analytical quantification level for a pollutant is the minimum concentration at which that pollutant can be reliably measured. For the toxic pollutants in this study, the analytical quantification levels are: 0.005 mg/l for pesticides, PCB's, chromium, and nickel; 0.010 mg/l for the remaining organic toxic pollutants and cyanide, arsenic, beryllium, and selenium; 10 million fibers per liter (10 MFL) for asbestos; 0.020 mg/l for lead and silver; 0.009 mg/l for copper; 0.002 mg/l for cadmium; and 0.0001 mg/l for mercury.

The pesticide TCDD (2,3,7,8-tetrachloridibenzo-p-dioxin) was not analyzed for because a standard sample was unavailable to the analytical laboratories. Samples collected by the Agency's contractor were not analyzed for asbestos. Data on asbestos content are available for a very small number of samples relevant to this study as a result of the first phase of a screening program for asbestos in a wide range of industrial categories. Of these samples, only a few appear to contain asbestos at analytically significant levels.

Paragraph 8(a)(iii) also allows the Administrator to exclude from regulation toxic pollutants detected in amounts too small to be effectively reduced by technologies known to the Administrator. Pollutants which were detected below levels considered to be achievable by specific available treatment methods were therefore eliminated from further consideration. For the toxic metals, the chemical precipitation, sedimentation, and filtration technology

treatment effectiveness values, which are presented in Section VII (Table VII-20, p. 807), were used. For the toxic organic pollutants detected above their analytical quantification level, treatment effective values for activated carbon technology were used. These treatment effectiveness values represent the most stringent treatment options considered for pollutant removal. This allows for the most conservative pollutant exclusion based on pollutants detected below treatable levels. In addition to the provisions outlined above, Paragraph 8(a)(iii) of the Settlement Agreement (1) allows the Administrator to exclude from regulation toxic pollutants detectable in the effluent from only a small number of sources within the subcategory because they are uniquely related to those sources, and (2) allows the Administrator tor to exclude from regulation toxic pollutants which will be effectively controlled by the technologies upon which are based other effluent limitations and guidelines, or pretreatment standards.

Waste streams in the aluminum forming category have been grouped together into core and ancillary waste streams in the subcategorization scheme, which has been described in Section IV. The pollutant exclusion procedure was applied for the following:

(1) Rolling With Neat Oils Core Waste Streams
(2) Rolling With Emulsions Core Waste Streams
(3) Extrusion Core Waste Streams
(4) Forging Core Waste Streams
(5) Drawing With Neat Oils Core Waste Streams
(6) Drawing With Emulsions Or Soaps Core Waste Streams
(7) Ancillary Waste Streams

Toxic pollutants remaining after the application of the exclusion process were then selected for further consideration in estab lishing specific regulations.

DESCRIPTION OF POLLUTANT PARAMETERS

The following discussion addresses the pollutant parameters detected above their analytical quantification level in any sample of aluminum forming wastewater. The description of each pollutant provides the following information: the source of the pollutant; whether it is a naturally occuring element, processed metal, or manufactured compound; general physical properties and the form of the pollutant; toxic effects of the pollutant in humans other animals; and behavior of the pollutant in a POTW at concentrations that might be expected from industrial discharges.

Acenaphthene (1). Acenaphthene (1,2-dihydroacenaphthylene, or 1,8-ethylene-naphthalene) is a polynuclear aromatic hydrocarbon (PAH) with molecular weight of 154 and a formula of Cl_2H_{10}.

Acenaphthene occurs in coal tar produced during high temperature coking of coal. It has been detected in cigarette smoke and gasoline exhaust condensates.

The pure compound is a white crystalline solid at room temperature witn a melting range of 95C to 97C and a boiling range of 278C to 280C. Its vapor pressure at room temperature is less than 0.02 mm Hg. Acenaphthene is slightly soluble in water (100 mg/l), but even more soluble in organic solvents such as ethanol, toluene, and chloroform. Acenaphthene can be oxidized by oxygen- or ozone in the presence of certain catalysts. It is stable under laboratory conditions.

Acenaphthene is used as a dye intermediate, in the manufacture of some plastics, and as an insecticide and fungicide.

So little research has been performed on acenaphthene that its mammalian and human health effects are virtually unknown. The water quality criterion of 0.02 mg/l is recommended to prevent the adverse effects on humans due to the organoleptic properties of acenaphthene in water.

No detailed study of acenaphthene behavior in a POTW is available. However, it has been demonstratd that none of the organic toxic pollutants studied so far can be broken down by biological treatment processes as readily as fatty acids, carbohydrates, or proteins. Many of the toxic pollutants have been investigated, at least in laboratory-scale studies, at concentrations higher than those expected to be contained by most municipal waste waters. General observations relating molecular structure to ease of degradation have been developed for all of the toxic organic pollutants.

The conclusion reached by study of the limited data is that biological treatment produces little or no degradation of acenaphthene. No evidence is available for drawing conclusions about its possible toxic or inhibitory effect on POTW operation.

Its water solubility would allow acenaphthene present in the influent to pass through a POTW into the effluent. The hydrocarbon character of this compound makes it sufficiently hydrophobic that adsorption onto suspended solids and retention in the sludge may also be a significant route for removal of acenaphthene from the POTW.

Acenaphthene has been demonstrated to affect the growth of plants through improper nuclear division and polyploidal chromosome number. However, it is not expected that land application of sewage sludge containing acenaphthene at the low concentrations

which are to be expectd in a POTW sludge would result in any adverse effects on animals ingesting plants grown in such soil.

Acrolein (2). The available data for acrolein indicate that acute and chronic toxicity to freshwater aquatic life occur at concentrations as low as 68 and 21 ug/l, respectively, and would occur at lower concentrations among species that are more sensitive than those tested.

For the protection of human health from the toxic properties of acrolein ingested through contaminated aquatic organisms, the ambient water criterion is determined to be 320 ug/l. For the protection of human health from the toxic properties of acrolein ingested though contaminated aquatic organisms alone, the ambient water criterion is determined to be 780 ug/l.

Acrolein has a wide variety of applications. It is used directly as a biocide for aquatic weed control; for algae, weed, and mollusk control in recirculating process water systems; for slime control in the paper industry; and to protect liquid fuels against microorganisms. Acrolein is also used directly for crosslinking protein collagen in leather tanning and for tissue fixation in histological samples. It is widely used as an inter mediate in the chemical industry. Its dimer, which is prepared by a thermal, uncatalyzed reaction, has several applications, including use as an intermediate for crosslinking agents, humectants, plasticizers, polyurethane intermediates, copolymers and homopolymers, and creaseproofing cotton. The monomer is utilized in synthesis via the Diels-Alder reaction as a dienophile or a diene. Acrolein is widely used in copolymerization, but its homopolymers do not appear commercially important. The copoly- mers of acrolein are used in photography, for textile treatment, in the paper industry, as builders in laundry and dishwasher detergents, and as coatings for aluminum and steel panels, as well as other applications. In 1975, worldwide production was about 59 kilotons. Its largest market was for methionine manufacture. Worldwide capacity was estimated at 102 kilotons/year, of which U.S. capacity was 47.6 kilotons/year.

Acrolein (2-propenal) is a liquid with a structural formula of CH_2=CHCHO and a molecular weight of 56.07. It melts at -86.95C, boils at 52.5 to 53.5C, and has a density of 0.8410 at 20C. The vapor pressure at 20C is 215 mm Hg, and its water solubility is 20.8 percent by weight at 20C.

A flammable liquid with a pungent odor, acrolein is an unstable compound that undergoes polymerization to the plastic solid disacryl, especially under light or in the presence of alkali or strong acid. It is the simplest member of the class of

unsaturated aldehydes, and the extreme reactivity of acrolein is due to the presence of a vinyl group ($H_2C=H-$) and an aldehyde group on such a small molecule. Additions to the carbon-carbon double bond of acrolein are catalyzed by acids and bases. The addition of halogens to this carbon-carbon double bond proceeds readily.

Acrolein can enter the aquatic environment by its use as an aquatic herbicide, from industrial discharge, and from the chlorination of organic compounds in wastewater and drinking water treatment. It is often present in trace amounts in foods and is a component of smog, fuel combustion, wood, and possibly other fire, and cigarette smoke. An evaluation of available data indicates that, while industrial exposure to manufactured acrolein is unlikely, acrolein from nonmanufactured sources is pervasive. Acrolein exposure will occur through food ingestion and inhalation. Exposure through the water or dermal route is less likely. However, analysis of municipal effluents of Dayton, Ohio showed the presence of acrolein in six of 11 samples, with concentrations ranging from 20 to 200 ug/l.

Benzene (4). Benzene (C_6H_6) is a clear, colorless liquid obtained mainly from petroleum feedstocks by several different processes. Some is recovered from light oil obtained from coal carbonization gases. It boils at 80C and has a vapor pressure of 100 mm Hg at 26C. It is slightly soluble in water (1.8 g/l at 25C) and it dissolves in hydrocarbon solvents. Annual U.S. production is three to four million tons.

Most of the benzene used in the U.S. goes into chemical manufacture. About half of that is converted to ethylbenzene which is used to make styrene. Some benzene is used in motor fuels.

Benzene is harmful to human health, according to numerous published studies. Most studies relate effects of inhaled benzene vapors. These effects include nausea, loss of muscle coordination, tion, and excitement, followed by depression and coma. Death is usually the result of respiratory or cardiac failure. Two specific blood disorders are related to benzene exposure. One of these, acute myelogenous leukemia, represents a carcinogenic effect of benzene. However, most human exposure data is based on exposure in occupational settings and benzene carcinogenesis is not considered to be firmly established.

Oral administration of benzene to laboratory animals produced leukopenia, a reduction in mumber of leukocytes in the blood. Subcutaneous injection of benzene-oil solutions has produced suggestive, but not conclusive, evidence of benzene carcinogenesis.

Benzene demonstrated teratogenic effects in laboratory animals, and mutagenic effects in humans and other animals.

For maximum protection of human health from the potential carcinogenic effects of exposure to benzene through ingestion of water and contaminated aquatic organisms, the ambient water concentration is zero. Concentrations of benzene estimated to result in additional lifetime cancer risk at levels of 10-7, 10-6, and 10-5 are 0.00015 mg/l, 0.0015 mg/l, and 0.015 mg/l, respectively.

Some studies have been reported regarding the behavior of benzene in a POTW. Biochemical oxidation of benzene under laboratory conditions, at concentrations of 3 to 10 mg/l, produced 24, 27, 24, and 20 percent degradation in 5, 10, 15, and 20 days, respectively, using unacclimated seed cultures in fresh water. Degradation of 58, 67, 76, and 80 percent was produced in the same time periods using acclimated seed cultures. Other studies pro duced similar results. The EPAs most recent study of the behavior of toxic organics in a POTW indicates that benzene is 78 per cent removed. Other reports indicate that most benzene entering a POTW is removed to the sludge and that influent concentrations of 1 g/l inhibit sludge digestion. There is no information about possible effects of benzene on crops grown in soils amended with sludge containing benzene.

Carbon Tetrachloride (6). Carbon tetrachloride (CCl_4), also called tetrhloromethane, is a colorless liquid produced primarily by the chlorination of hydrocarbons - particularly methane. Carbon tetrachloride boils at 77C and has a vapor pressure of 90 mm Hg at 20C. It is slightly soluble in water (0.8 gm/l at 25C) and soluble in many organic solvents. Approximately one-third of a million tons is produced annually in the U.S.

Carbon tetrachloride, which was displaced by perchloroethylene as a dry cleaning agent in the 1930's, is used principally as an intermediate for production of chlorofluoromethanes for refrigerants, aerosols, and blowing agents. It is also used as a grain fumigant.

Carbon tetrachloride produces a variety of toxic effects in humans. Ingestion of relatively large quantities - greater than five grams - has frequently proved fatal. Symptoms are burning sensation in the mouth, esophagus, and stomach, followed by abdominal pains, nausea, diarrhea, dizziness, abnormal pulse, and coma. When death does not occur immediately, liver and kidney damage are usually found. Symptoms of chronic poisoning are not as well defined. General fatigue, headache, and anxiety have been observed, accompanied by digestive tract and kidney discomfort or pain.

Data concerning teratogenicity and mutagenicity of carbon tetrachloride are scarce and inconclusive. However, carbon tetrachloride has been demonstrated to be carcinogenic in laboratory animals. The liver was the target organ.

For maximum protection of human health from the potential carcinogenic effects of exposure to carbon tetrachloride through ingestion of water and contaminated aquatic organisms, the ambient water concentration of zero. Concentrations of carbon tetrachloride estimated to result in additional lifetime cancer risk at risk levels of 10-7, 10-6, and 10-5 are 0.000026 mg/l, 0.00026 mg/l, and 0.0026 mg/l, respectively.

Many of the toxic organic pollutants have been investigated, at least in laboratory-scale studies, at concentrations higher than those expected to be found in most municipal wastewaters. General observations have been developed relating molecular structure to ease of degradation for all of the toxic organic pollutants. The conclusion reached by study of the limited data is that biological treatment produces a moderate degree of removal of carbon tetrachloride in a POTW. No information was found regarding the possible interference of carbon tetrachloride with treatment processes. The EPA's most recent study of the behavior of toxic organics in a POTW indicates that carbon tetrachloride is 50 percent removed. Based on the water solubility of carbon tetrachloride, and the vapor pressure of this compound, it is expected that some of the undegraded carbon tetrachloride will pass through to the POTW effluent and some will be volatilized in aerobic processes.

Chlorobenzene (7). Chlorobenzene (C_6H_5Cl), also called monochlorobenzene is a clear, colorless, liquid manufactured by the liquid phase chlorination of benzene over a catalyst. It boils at 132C and has a vapor pressure of 12.5 mm Hg at 25C. It is almost insoluble in water (0.5 g/l at 30C), but dissolves in hydrocarbon solvents. U.S. annual production is near 150,000 tons.

Principal uses of chlorobenzene are as a solvent and as an intermediate for dyes and pesticides. Formerly it was used as an intermediate for DDT production, but elimination of production of that compound reduced annual U.S. production requirements for chlorobenzene by half. Data on the threat to human health posed by chlorobenzene are limited in number. Laboratory animals, administered large doses of chlorobenzene subcutaneously, died as a result of central nervous system depression. At slightly lower dose rates, animals died of liver or kidney damage. Metabolic disturbances occurred also. At even lower dose rates of orally administered chlorobenzene similar effects were observed, but some animals survived longer than at higher dose rates. No

studies have been reported regarding evaluation of the teratogenic, mutagenic, or carcinogenic potential of chlorobenzene.

For the prevention of adverse effects due to the organoleptic properties of chlorobenzene in water the recommended criterion is 0.020 mg/l.

Laboratory studies of the biochemical oxidation of chlorobenzene have been carried out at concentrations greater than those expected to normally be present in POTW influent. Results showed the extent of degradation to be 25, 28, and 44 percent after 5, 10, and 20 days, respectively. In another, similar study using a phenol-adapted culture 4 percent degradation was observed after 3 hours with a solution containing 80 mg/l. On the basis of these results and general conclusions about the relationship of molecular structure to biochemical oxidation, it is concluded that chlorobenzene remaining intact is expected to volatilize from the POTW in aeration processes. The estimated half-life of chlorobenzene in water based on water solubility, vapor pressure and molecular weight is 5.8 hours. The EPA's most recent study of the behavior of toxic organics in a POTW indicates that chlorobenzene is 67 percent removed.

1,1,1-Trichloroethane (11). 1,1,1-Trichloroethane is one of the two possible trichlorethanes. It is manufactured by hydrochlorinating vinyl chloride to 1,1-dichloroethane which is then chlorinated to the desired product. 1,1,1-Trichloroethane is a liquid at room temperature with a vapor pressure of 96 mm Hg at 20C and a boiling point of 74C. Its formula is CCl_3CH_3. It is slightly soluble in water (0.48 g/l) and is very soluble in organic solvents. U.S. annual production is greater than one-third of a million tons.

1,1,1-Trichloroethane is used as an industrial solvent and degreasing agent.

Most human toxicity data for 1,1,1-trichloroethane relates to inhalation and dermal exposure routes. Limited data are available for determining toxicity of ingested 1,1,1-trichloroethane, and those data are all for the compound itself, not solutions in water. No data are available regarding its toxicity to fish and aquatic organisms. For the protection of human health from the toxic properties of 1,1,1-trichloroethane ingested through the comsumption of water and fish, the ambient water criterion is 15.7 mg/l. The criterion is based on bioassays for possible carcinogenicity.

Biochemical oxidation of many of the toxic organic pollutants has been investigated, at least in laboratory scale studies, at

concentrations higher than commonly expected in municipal waste water. General observations relating molecular structure to ease of degradation have been developed for all of these pollutants. The conclusion reached by study of these limited data is that biological treatment produces a moderate degree of degradation of 1,1,1-trichloroethane. No evidence is available for drawing conclusions about its possible toxic or inhibitory effect on POTW operation. However, for degradation to occur, a fairly constant input of the compound would be necessary.

Its water solubility would allow 1,1,1-trichloroethane, present in the influent and not biodegradable, to pass through a POTW into the effluent. The Agency's most recent study of the behavior of toxic organics in a POTW indicates that 1,1,1-trichlorethane is 87 percent removed. One factor which has received some attention, but no detailed study, is the volatilization of the lower molecular weight organics from a POTW. If 1,1,1-trichloroethane is not biodegraded, it will volatilize during aeration processes in the POTW. It has been demonstrated that none of the toxic organic pollutants of this type can be broken down by biological treatment processes as readily as fatty acids, carbohydrates, or proteins.

1,1-Dichloroethane (13). 1,1-Dichloroethane, also called ethylidene dichloride and ethylidene chloride, is a colorless liquid manufactured by reacting hydrogen chloride with vinyl chloride in 1,1-dichloroethane solution in the presence of a catalyst. However, it is reportedly not manufactured commercially in the U.S. 1,1-Dichloroethane boils at 57C and has a vapor pressure of 182 mm Hg at 20C. It is slightly soluble in water (5.5 g/l at 20C) and very soluble in organic solvents.

1,1-Dichloroethane is used as an extractant for heat-sensitive substances and as a solvent for rubber and silicone grease.

1,1-Dichloroethane is less toxic than its isomer (1,2-dichloroethane), but its use as an anesthetic has been discontinued because of marked excitation of the heart. It causes central nervous system depression in humans. There are insufficient data to derive water quality criteria for 1,1-dichloroethane.

Many of the toxic organic pollutants have been investigated, at least in laboratory scale studies, at concentrations higher than those expected to be contained by most municipal wastewaters. General observations have been developed relating molecular structure to ease of degradation for all of the toxic organic pollutants. The conclusion reached by study of the limited data is that biological treatment produces only a moderate removal of 1,1-dichloroethane in a POTW by degradation. The EPA's most

recent study of the behavior of toxic organics in a POTW indicates that 1,1-dichloroethane is 76 percent removed.

The high vapor pressure of 1,1-dichloroethane is expected to result in volatilization of some of the compound from aerobic processes in a POTW. Its water solubility will result in some of the 1,1-dichloroethane which enters the POTW leaving in the effluent from the POTW.

1,1,2-Trichloroethane (14). 1,1,2-Trichloroethane is one of the two possible trichloroethanes and is sometimes called ethane trichloride or vinyl trichloride. It is used as a solvent for fats, oils, waxes, and resins, in the manufacture of 1,1-dichloro-ethylene, and as an intermediate in organic synthesis.

1,1,2-Trichloroethane is a clear, colorless liquid at room temperature with a vapor pressure of 16.7 mm Hg at 20°C, and a boiling point of 113°C. It is insoluble in water and very soluble in organic solvents. The formula is $CHCl_2CH_2Cl$.

Human toxicity data for 1,1,2-trichloroethane does not appear in the literature. The compound does produce liver and kidney damage in laboratory animals after intraperitoneal administration. No literature data was found concerning teratogenicity or mutagenicity of 1,1,2-trichloroethane. However, mice treated with 1,1,2-trichloroethane showed increased incidence of hepatocellular carcinoma. Although bioconcentration factors are not available for 1,1,2-trichloroethane in fish and other freshwater aquatic organisms, it is concluded on the basis of octanol-water partition coefficients that bioconcentration does occur.

For the maximum protection of human health from the potential carcinogenic effects of exposure to 1,1,2-trichloroethane through ingestion of water and contaminated aquatic organisms, the ambient water concentration is zero. Concentrations of this compound estimated to result in additional lifetime cancer risks at risk levels of 10^{-7}, 10^{-6}, and 10-5 are 0.00006 mg/l, 0.0006 mg/l, and 0.006 mg/l, respectively. If contaminated aquatic organisms alone are consumed, excluding the consumption of water, the water concentration should be less than 0.418 mg/l to keep the increased lifetime cancer risk below 10^{-5}. Available data show that adverse effects on aquatic life occur at concentrations higher than those cited for human health risks.

It is reported that small amounts of 1,1,2-trichloroethane are formed by chlorination processes and that this compound persists in the environment (greater than two years) and is not biologically degraded. This information is not completely consistent with the conclusions based on laboratory scale biochemical oxidation studies and relating molecular structure to ease of

degradation. That study concluded that biological treatment in a POTW will produce moderate removal of 1,1,2-trichloroethane. The EPA's most recent study of the behavior of toxic organics in a POTW indicates that 1,1,2-trichloroethane is 96 percent removed.

The lack of water solubility and the relatively high vapor pressure may lead to removal of this compound from a POTW by volatilization.

2,4,6-Trichlorophenol (21). 2,4,6-Trichlorophenol ($Cl_3C_6H_2OH$, abreviated here to 2,4,6-TCP) is a colorless, crystalline solid at room temperature. It is prepared by the direct chlorination of phenol. 2,4,6-TCP melts at 68°C and is slightly soluble in water (0.8 gm/l at 25°C). This phenol does not produce a color with 4-aminoantipyrene, and therefore does not contribute to the nonconventional pollutant parameter "Total Phenols." No data were found on production volumes.

2,4,6-TCP is used as a fungicide, bactericide, glue and wood preservative, and for antimildew treatment. It is also used for the manufacture of 2,3,4,6-tetrachlorophenol and pentachlorophenol.

No data were found on human toxicity effects of 2,4,6-TCP. Reports of studies with laboratory animals indicate that 2,4,6-TCP produced convulsions when injected interperitoneally. Body temperature was elevated also. The compound also produced inhibition of ATP production in isolated rat liver mitochondria, increased mutation rates in one strain of bacteria, and produced a genetic change in rats. No studies on teratogenicity were found. Results of a test for carcinogenicity were inconclusive.

For the maximum protection of human health from the potential carcinogenic effects of exposure to 2,4,6-TCP through ingestion of water and contaminated aquatic organisms, the ambient water concentration is zero based on the non-threshold assumption for this chemical. However, zero level may not be attainable at the present time. Therefore, the levels which may result in incremental increase of cancer risk over the lifetime are estimated at 10^{-5}, 10^{-6}, and 10^{-7}. The corresponding criteria are 0.012 mg/l, 0.0012 mg/l, and 0.00012 mg/l respectively.

Although no data were found regarding the behavior of 2,4,6-TCP in a POTW, studies of the biochemical oxidation of the compound have been made at laboratory scale at concentrations higher than those normally expected in municipal wastewaters. Biochemical oxidation of 2,4,6-TCP at 100 mg/l produced 23 percent degradation using a phenol-adapted acclimated seed culture. Based on these results, biological treatment in a POTW is expected to produce a moderate degree of degradation. Another study indicates

that 2,4,6-TCP may be produced in a POTW by chlorination of phenol during normal chlorination treatment.

Para-chloro-meta-cresol (22). Para-chloro-meta-cresol ($ClC\ H_6OH$) is thought to be a 4-chloro-3-methyl-phenol (4-chloro-meta-cresol, or 2-chloro-5-hydroxy-toluene), but is also used by some authorities to refer to 6-chloro-3-methylphenol (6-chloro-meta-cresol, or 4-chloro-3-hydroxy-toluene), depending on whether the chlorine is considered to be para to the methyl or to the hydroxy group. It is assumed for the purposes of this document that the subject compound is 2-chloro-5-hydroxytoluene. This compound is a colorless crystalline solid melting at 66 to 68° C. It is slightly soluble in water (3.8 gm/l) and soluble in organic solvents. This phenol reacts with 4-aminoantipyrene to give a colored product and therefore contributes to the nonconventional pollutant parameter designated "Total Phenols." No information on manufacturing methods or volumes produced was found.

Para-chloro-meta cresol (abbreviated here as PCMC) is marketed as a microbicide, and was proposed as an antiseptic and disinfectant more than 40 years ago. It is used in glues, gums, paints, inks, textiles, and leather goods. PCMC was found in raw wastewaters from the die casting quench operation from one subcategory of foundry operations.

Although no human toxicity data are available for PCMC, studies on laboratory animals have demonstrated that this compound is toxic when administered subcutaneously and intravenously. Death was preceded by severe muscle tremors. At high dosages kidney damage occurred. On the other hand, an unspecified isomer of chlorocresol, presumed to be PCMC, is used at a concentration of 0.15 percent to preserve mucous heparin, a natural product administered intravenously as an anticoagulant. The report does not indicate the total amount of PCMC typically received. No information was found regarding possible teratogenicity, or carcinogenicity of PCMC.

Two reports indicate that PCMC undergoes degradation in biochemical oxidation treatments carried out at concentrations higher than are expected to be encountered in POTW influents. One study showed 50 percent degradation in 3.5 hours when a phenol-adapted acclimated seed culture was used with a solution of 60 mg/l PCMC. The other study showed 100 percent degradation of a 20 mg/l solution of PCMC in two weeks in an aerobic activated sludge test system. No degradation of PCMC occurred under anaerobic conditions. The EPA's most recent study of the behavior of toxic organics in a POTW indicates that PCMC is 89 percent removed.

Chloroform (23). Chloroform, also called trichloromethane, is a colorless liquid manufactured commercially by chlorination of

methane. Careful control of conditions maximizes chloroform production, but other products must be separated. Chloroform boils at 61° C and has a vapor pressure of 200 mm Hg at 25°C. It is slightly soluble in water (8.22 g/l at 20°C) and readily soluble in organic solvents.

Chloroform is used as a solvent and to manufacture refrigerants, pharmaceuticals, plastics, and anesthetics. It is seldom used as an anesthetic.

Toxic effects of chloroform on humans include central nervous system depression, gastrointestinal irritation, liver and kidney damage and possible cardiac sensitization to adrenalin. Carcinogenicity has been demonstrated for chloroform on laboratory animals.

For the maximum protection of human health from the potential carcinogenic effects of exposure to chloroform through ingestion of water and contaminated aquatic organisms, the ambient water concentration is zero. Concentrations of chloroform estimated to result in additional lifetime cancer risks at the levels of 10^{-7}, 10^{-6}, and 10^{-5} were 0.000019 mg/l, 0.00019 mg/l, and 0.0019 mg/l, respectively.

The biochemical oxidation of this compound was studied in one laboratory scale study at concentrations higher than those expected to be contained by most municipal wastewaters. After 5, 10, and 20 days no degradation of chloroform was observed. The conclusion reached is that biological treatment produces little or no removal by degradation of chloroform in a POTW.

The high vapor pressure of chloroform is expected to result in volatilization of the compound from aerobic treatment steps in a POTW. Remaining chloroform is expected to pass through into the POTW effluent. In addition, the most recent EPA study of the behavior of toxic organics in a POTW indicates that chloroform is 61 percent removed.

<u>2-Chlorophenol</u> <u>(24)</u>. 2-Chlorophenol (ClC_6H_4OH), also called ortho-chlorophenol, is a colorless liquid at room temperature, manufactured by direct chlorination of phenol followed by distillation to separate it from the other principal product, 4-chlorophenol. 2-Chlorophenol solidifies below 7° C and boils at 176° C. It is soluble in water (28.5 gm/l at 20° C) and soluble in several types of organic solvents. This phenol gives a strong color with 4-aminoantipyrene and therefore contributes to the nonconventional pollutant parameter "Total Phenols." Production statistics could not be found. 2-Chlorophenol is used almost exclusively as a chemical intermediate in the production of

pesticides and dyes. Production of some phenolic resins uses 2-chlorophenol.

Very few data are available on which to determine the toxic effects of 2-chlorophenol on humans. The compound is more toxic to laboratory mammals when administered orally than when administered subcutaneously or intravenously. This affect is attributed to the fact that the compound is almost completely in the un-ionized state at the low pH of the stomach and hence is more readily absorbed into the body. Initial symptoms are restlessness and increased respiration rate, followed by motor weakness and convulsions induced by noise or touch. Coma follows. Following lethal doses, kidney, liver, and intestinal damage were observed. No studies were found which addressed the teratogenicity or mutagenicity of 2-chlorophenol. Studies of 2-chlorophenol as a promoter of carcinogenic activity of other carcinogens were conducted by dermal application. Results do not bear a determinable relationship to results of oral administration studies.

For the prevention of adverse effects due to the organoleptic properties of 2-chlorophenol in water, the criterion is 0.0003 mg/l.

Laboratory scale studies of the behavior of 2-chlorophenol have been conducted at concentrations higher than those expected to be found in municipal wastewaters. At 1 mg/l of 2-chlorophenol, an acclimated culture produced 100 percent degradation by biochemical oxidation after 15 days. Another study showed 45, 70, and 79 percent degradation by biochemical oxidation after 5, 10, and 20 days, respectively. The conclusion reached by the study of these limited data, and general observations on all toxic organic pollutants relating molecular structure to ease of biochemical oxidation, is that 2-chlorophenol is removed to a high degree or completely by biological treatment in a POTW. The most recent EPA study of the behavior of toxic organics in a POTW indicates that 2-chlorophenol is 50 percent removed. Undegraded 2-chlorophenol is expected to pass through a POTW into the effluent because of the water solubility. Some 2-chlorophenol is also expected to be generated by chlorination treatments of POTW effluents containing phenol.

<u>1,1-Dichloroethylene (29)</u>. 1,1-Dichloroethylene (1,1-DCE), also called vinylidene chloride, is a clear colorless liquid manufactured by dehydrochlorination of 1,1,2-trichloroethane. 1,1-DCE has the formula CCl_2CH_2. It has a boiling point of 32°C, and a vapor pressure of 591 mm Hg at 25°C. 1,1-DCE is slightly soluble in water (2.5 mg/l) and is soluble in many organic solvents. U.S. production is in the range of hundreds of thousands of tons annually.

1,1-DCE is used as a chemical intermediate and for copolymer coatings or films. It may enter the wastewater of an industrial facility as the result of decomposition of 1,1,1-trichloroethylene used in degreasing operations, or by migration from vinylidene chloride copolymers exposed to the process water. Human toxicity of 1,1-DCE has not been demonstrated; however, it is a suspected human carcinogen. Mammalian toxicity studies have focused on the liver and kidney damage produced by 1,1-DCE. Various changes occur in those organs in rats and mice ingesting 1,1-DCE.

For the maximum protection of human health from the potential carcinogenic effects due to exposure to 1,1-dichloroethylene through ingestion of water and contaminated aquatic organisms, the ambient water concentration should be zero based on the non-threshold assumption for this chemical. However, a zero level may not be attainable at the present time. Therefore, the levels which may result in an incremental increase of cancer risk over the lifetime are estimated at 10^{-5}, 10^{-6}, and 10^{-7}. The corresponding criteria are 0.00033 mg/l, 0.000033 mg/l, and 0.0000033 mg/l, respectively.

Under laboratory conditions, dichloroethylenes have been shown to be toxic to fish. The primary effect of acute toxicity of the dichloroethylenes is depression of the central nervous system. The octanol/water partition co-efficient of 1,1-DCE indicates it should not accumulate significantly in animals.

Biochemical oxidation of many of the toxic organic pollutants has been investigated in laboratory scale studies at concentrations higher than would normally be expected in municipal wastewaters. General observations relating molecular structure to ease of degradation have been developed for all of these pollutants. The conclusion reached by study of the limited data is that biological treatment produces little or no degradation of 1,1-dichloroethylene. No evidence is available for drawing conclusions about the possible toxic or inhibitory effect of 1,1-DCE on POTW operation. Because of water solubility, 1,1-DCE which is not volatilized or degraded is expected to pass through a POTW. Very little 1,1-DCE is expected to be found in sludge from a POTW.

The most recent EPA study of the behavior of toxic organics in a POTW indicates that 1,1-DCE is 80 percent removed. The very high vapor pressure of 1,1-DCE is expected to result in release of significant percentages of this material to the atmosphere in any treatment involving aeration. Degradation of dichloroethylene in air is reported to occur, with a half-life of eight weeks.

<u>1,2-trans-Dichloroethylene (30)</u>. 1,2-Dichloroethylene (1,2-<u>trans</u>-DCE) is a clear, colorless liquid with the formula

CHClCHCl. 1,2-trans-DCE is produced in mixture with the cis-isomer by chlorination of acetylene. The cis-isomer has distinctly different physical properties. Industrially, the mixture is used rather than the separate isomers. 1,2-trans-DCE has a boiling point of 48°C, and a vapor pressure of 234 mm Hg at 25°C.

The principal use of 1,2-dichloroethylene (mixed isomers) is to produce vinyl chloride. It is used as a lead scavenger in gasoline, general solvent, and for synthesis of various other organic chemicals. When it is used as a solvent, 1,2-trans-DCE can enter wastewater streams.

Although 1,2-trans-DCE is thought to produce fatty degeneration of mammalian liver, there are insufficient data on which to base any ambient water criterion.

In the reported toxicity test of 1,2-trans-DCE on aquatic life, the compound appeared to be about half as toxic as the other dichloroethylene (1,1-DCE) on the toxic pollutants list.

Biochemical oxidation of many of the toxic organic pollutants has been investigated in laboratory scale studies at concentrations higher than would normally be expected in municipal wastewaters. General observations relating molecular structure to ease of degradation have been developed for all of these pollutants. The conclusion reached by the study of the limited data is that biochemical oxidation produces little or no degradation of 1,2-trans-dichloroethylene. No evidence is available for drawing conclusions about the possible toxic or inhibitory effect of 1,2-trans-dichloroethylene on POTW operation. It is expected that its low molecular weight and degree of water solubility will result in 1,2-trans-DCE passing through a POTW to the effluent if it is not degraded or volatilized. Very little 1,2-trans-DCE is expected to be found in sludge from a POTW.

In EPA's most recent study of the behavior of toxic organics in a POTW, 1,2-trans-DCE is shown to be 72 percent removed. The high vapor pressure of 1,2-trans-DCE is expected to result in release of a significant percentage of this compound to the atmosphere in any treatment involving aeration. Degradation of the dichloroethylenes in air is reported to occur, with a half-life of eight weeks.

2,4-Dimethylphenol (34). 2,4-Dimethylphenol (2,4-DMP), also called 2,4-xylenol, is a colorless, crystalline solid at room temperature (25°C), but melts at 27°C to 28°C. 2,4-DMP is slightly soluble in water and, as a weak acid, is soluble in alkaline solutions. Its vapor pressure is less than 1 mm Hg at room temperature.

2,4-DMP is a natural product, occurring in coal and petroleum sources. It is used commercially as an intermediate for manufacture of pesticides, dye stuffs, plastics and resins, and surfactants. It is found in the water runoff from asphalt surfaces. It can find its way into the wastewater of a manufacturing plant from any of several adventitious sources.

Analytical procedures specific to this compound are used for its identification and quantification in wastewaters. This compound does not contribute to "Total Phenols" determined by the 4-aminoantipyrene method.

Three methylphenol isomers (cresols) and six dimethylphenol isomers (xylenols) generally occur together in natural products, industrial processes, commercial products, and phenolic wastes. Therefore, data are not available for human exposure to 2,4-DMP alone. In addition to this, most mammalian tests for toxicity of individual dimethylphenol isomers have been conducted with isomers other than 2,4-DMP.

In general, the mixtures of phenol, methylphenols, and dimethylphenols contain compounds which produced acute poisoning in laboratory animals. Symptoms were difficult breathing, rapid muscular spasms, disturbance of motor coordination, and asymmetrical body position. In a 1977 National Academy of Science publication the conclusion was reached that, "In view of the relative paucity of data on the mutagenicity, carcinogenicity, teratogenicity, and long term oral toxicity of 2,4-dimethylphenol, estimates of the effects of chronic oral exposure at low levels cannot be made with any confidence." No ambient water quality criterion can be set at this time. In order to protect public health, exposure to this compound should be minimized as soon as possible.

Toxicity data for fish and freshwater aquatic life are limited; however, in reported studies of 2,4-dimethylphenol at concentrations as high as 2 mg/l no adverse effects were observed.

Biological degradability of 2,4-DMP as determined in one study, showed 94.5 percent removal based on chemical oxygen demand (COD). Another study determined that persistance of 2,4-DMP in the environment is low, and thus any of the compound which remained in the sludge or passed through the POTW into the effluent would be degraded within moderate length of time (estimated as two months in the report). The EPA's most recent study of the behavior of toxic organics in a POTW indicates that 2,4-DMP is 59 percent removed.

As a weak acid, the behavior of 2,4-DMP may be somewhat dependent on the pH of the influent to the POTW. However, over the normal limited range of POTW pH, little effect of pH would be expected.

2,4-Dinitrotoluene (35). 2,4-Dinitrotoluene [$(NO_2)_2C_6H_4CH_3$], a yellow crystalline compound, is manufactured as a coproduct with the 2,6-isomer by nitration of nitrotoluene. It melts at 71°C. 2,4-Dinitrotoluene is insoluble in water (0.27 g/l at 22° C) and soluble in a number of organic solvents. Production data for the 2,4-isomer alone are not available. The 2,4-and 2,6-isomers are manufactured in an 80:20 or 65:35 ratio, depending on the process used. Annual U.S. commercial production is about 150 thousand tons of the two isomers. Unspecified amounts are produced by the U.S. government and further nitrated to trinitrotoluene (TNT) for military use. The major use of the dinitrotoluene mixture is for production of toluene diisocyanate used to make polyurethanes. Another use is in production of dyestuffs.

The toxic effect of 2,4-dinitrotoluene in humans is primarily methemoglobinemia (a blood condition hindering oxygen transport by the blood). Symptoms depend on severity of the disease, but include cyanosis, dizziness, pain in joints, headache, and loss of appetite in workers inhaling the compound. Laboratory animals fed oral doses of 2,4-dinitrotoluene exhibited many of the same symptoms. Aside from the effects in red blood cells, effects are observed in the nervous system and testes.

Chronic exposure to 2,4-dinitrotoluene may produce liver damage and reversible anemia. No data were found on teratogenicity of this compound. Mutagenic data are limited and are regarded as confusing. Data resulting from studies of carcinogenicity of 2,4-dinitrotoluene point to a need for further testing for this property.

For the maximum protection of human health from the potential carcinogenic effects of exposure to 2,4-dinitrotoluene through ingestion of water and contaminated aquatic organisms, the ambient water concentration is zero. Concentrations of 2,4-dinitrotoluene estimated to result in additional lifetime cancer risk at risk levels of 10^{-7}, 10^{-6}, and 10^{-5} are 0.000011 mg/l, 0.00011 mg/l, and 0.0011 mg/l, respectively.

Data on the behavior of 2,4-dinitrotoluene in a POTW are not available. However, biochemical oxidation of 2,4-dinitrophenol was investigated on a laboratory scale. At 100 mg/l of 2,4-dinitrotoluene, a concentration considerably higher than that expected in municipal wastewaters, biochemical oxidation by an acclimated, phenol-adapted seed culture produced 52 percent degradation in three hours. Based on this limited information and general observations relating molecular structure to ease of

degradation for all the toxic organic pollutants, it was concluded that biological treatment in a POTW removes 2,4-dinitrotoluene to a high degree or completely. No information is available regarding possible interference by 2,4-dinitrotoluene in POTW treatment processes, or on the possible detrimental effect on sludge used to ammend soils in which food crops are grown.

1,2-Diphenylhydrazine (37). Toxicity tests with 1,2-diphenylhydrazine and the bluegill and *Daphnia magna* indicate that acute toxicity to freshwater aquatic life occurs at concentrations as low as 0.27 mg/l and would occur at lower concentrations among species that are more sensitive. No data are available concerning the chronic toxicity of 1,2-diphenylhydrazine to sensitive freshwater aquatic life.

For the maximum protection of human health from the potential carcinogenic effects due to exposure of diphenylhydrazine through ingestion of contaminated water and contaminated aquatic organisms, the ambient water concentrations should be zero based on the non-threshold assumption for this chemical. However, zero level may not be attainable at the present time. Therefore, the levels which may result in incremental increase of cancer risk over the lifetime are estimated at 10^{-5}, 10^{-6}, and 10^{-7}. The corresponding recommended criteria are 0.00042 mg/l, 0.000042 mg/l, and 0.000004 mg/l, respectively. For consumption of aquatic organisms only, excluding consumption of water, the levels are 0.0056 mg/l, 0.00056 mg/l, and 0.000056 mg/l, respectively.

Diphenylhydrazine exists as an asymmetrical isomer, 1,1-diphenylhydrazine, and a symmetrical isomer, 1,2-diphenylhydrazine (hydrazobenzene). The hydrochloride of 1,1-diphenylhydrazine is used as a reagent for the sugars, arabinose and lactose. 1,2-Diphenylhydrazine is used in the synthesis of phenylbutazone and as the starting material in the manufacture of benzidine, an intermediate in the production of dyes.

In 1977 the commercial production of 1,2-diphenylhydrazine was in excess of 1,000 lbs. However, this figure is probably an underestimate of the amount of diphenylhydrazine that was actually available. Diphenylhydrazine is produced in several synthetic processes as an intermediate or as a contaminant, but it is not possible to estimate these quantities, which are probably substantial.

The reaction of 1,2-diphenylhydrazine with acid results in the benzidine rearrangement. In the stomach, 1,2-diphenylhydrazine can be converted into benzidene, a known human carcinogen.

No data were found on the environmental presence or persistence of diphenylhydrazines, except for one report of detection in drinking water at a concentration of 0.001 mg/l. 1,1-Diphenylhydrazine and 1,2-diphenylhydrazine have been characterized as slightly soluble and insoluble in water, respectively. No quantitative data were found for the water solubilities and vapor pressures of these compounds; consequently, no predictions can be made about their persistence in water. 1,2-Diphenylhydrazine has a molecular weight of 184.24. It melts at 131°C and boils at 220°C.

No information on POTW removal efficiencies are available at this time.

Ethylbenzene (38). Ethylbenzene is a colorless, flammable liquid manufactured commercially from benzene and ethylene. Approximately half of the benzene used in the U.S. goes into the manufacture of more than three million tons of ethylbenzene annually. Ethylbenzene boils at 136°C and has a vapor pressure of 7 mm Hg at 20°C. It is slightly soluble in water (0.14 g/l at 15°C) and is very soluble in organic solvents.

About 98 percent of the ethylbenzene produced in the U.S. goes into the production of styrene, much of which is used in the plastics and synthetic rubber industries. Ethylbenzene is a constituent of xylene mixtures used as diluents in the paint industry, agricultural insecticide sprays, and gasoline blends.

Although humans are exposed to ethylbenzene from a variety of sources in the environment, little information on effects of ethylbenzene in man or animals is available. Inhalation can irritate eyes, affect the respiratory tract, or cause vertigo. In laboratory animals ethylbenzene exhibited low toxicity. There are no data available on teratogenicity, mutagenicity, or carcinogenicity of ethylbenzene.

Criteria are based on data derived from inhalation exposure limits. For the protection of human health from the toxic properties of ethylbenzene ingested through water and contaminated aquatic organisms, the ambient water quality criterion is 1.4 mg/l.

Laboratory scale studies of the biochemical oxidation of ethylbenzene at concentrations greater than would normally be found in municipal wastewaters have demonstrated varying degrees of degradation. In one study with phenol-acclimated seed cultures, 27 percent degradation was observed in a half day at 250 mg/l ethylbenzene. Another study at unspecified conditions showed 32, 38, and 45 percent degradation after 5, 10, and 20 days, respectively. Based on these results and general observations relating

molecular structure of degradation, the conclusion was reached that biological treatment produces only moderate removal of ethylbenzene in a POTW by degradation.

Other studies suggest that most of the ethybenzene entering a POTW is removed from the aqueous stream to the sludge. The ethylbenzene contained in the sludge removed from the POTW may volatilize.

In addition, the most recent EPA study of the behavior of toxic organics in POTW indicates that ethylbenzene is approximately 84 percent removed.

Fluoranthene (39). Fluoranthene (1,2-benzacenaphthene) is one of the compounds called polynuclear aromatic hydrocarbons (PAH). A pale yellow solid at room temperature, it melts at 111° C and has a negligible vapor pressure at 25°C. Water solubility is low (0.2 mg/l). Its molecular formula is $C_{16}H_{10}$.

Fluoranthene, along with many other PAH's, is found throughout the environment. It is produced by pyrolytic processing of organic raw materials, such as coal and petroleum, at high temperature (coking processes). It occurs naturally as a product of plant biosyntheses. Cigarette smoke contains fluoranthene. Although it is not used as the pure compound in industry, it has been found at relatively higher concentrations (0.002 mg/l) than most other PAH's in at least one industrial effluent. Furthermore, in a 1977 EPA survey to determine levels of PAH in U.S. drinking water supplies, none of the 110 samples analyzed showed any PAH other than fluoranthene.

Experiments with laboratory animals indicate that fluoranthene presents a relatively low degree of toxic potential from acute exposure, including oral administration. Where death occurred, no information was reported concerning target organs or specific cause of death.

There is no epidemiological evidence to prove that PAH in general, and fluoranthene, in particular, present in drinking water are related to the development of cancer. The only studies directed toward determining carcinogenicity of fluoranthene have been skin tests on laboratory animals. Results of these tests show that fluoranthene has no activity as a complete carcinogen (i.e., an agent which produces cancer when applied by itself), but exhibits significant cocarcinogenicity (i.e., in combination with a carcinogen, it increases the carcinogenic activity).

For the protection of human health from the toxic properties of fluoranthene ingested through water and through contaminated

aquatic organisms, the ambient water criterion is determined to be 0.042 mg/l.

The available data for fluoranthene indicate that acute toxicity to freshwater aquatic life occurs at concentrations as low as 3.980 mg/l and would occur at lower concentrations among species that are more sensitive than those tested.

Results of studies of the behavior of fluoranthene in conventional sewage treatment processes found in a POTW have been published. Removal of fluoranthene during primary sedimentation was found to be 62 to 66 percent (from an initial value of 0.00323 to 0.04435 mg/l to a final value of 0.00122 to 0.0146 mg/l), and the removal was 91 to 99 percent (final values of 0.00028 to 0.00026 mg/l) after biological purification with activated sludge processes.

A review was made of data on biochemical oxidation of many of the toxic organic pollutants investigated in laboratory scale studies at concentrations higher than would normally be expected in municipal wastewaters. General observations relating molecular structure to ease of degradation have been developed for all of these pollutants. The conclusion reached by study of the limited data is that biological treatment produces little or no degradation of fluoranthene. The same study, however, concludes that fluoranthene would be readily removed by filtration and oil-water separation and other methods which rely on water insolubility, or adsorption on other particulate surfaces. This latter conclusion is supported by the previously cited study showing significant removal by primary sedimentation.

No studies were found to give data on either the possible interference of fluoranthene with POTW operation, or the persistance of fluoranthene in sludges or POTW effluent waters. Several studies have documented the ubiquity of fluoranthene in the environment and it cannot be readily determined if this results from persistence of anthropogenic fluoranthene or the replacement of degraded fluoranthene by natural processes such as biosynthesis in plants.

Methylene Chloride (44). Methylene chloride, also called dichloromethane (CH_2Cl_2), is a colorless liquid manufactured by chlorination of methane or methyl chloride followed by separation from the higher chlorinated methanes formed as coproducts. Methylene chloride boils at 40°C, and has a vapor pressure of 362 mm Hg at 20°C. It is slightly soluble in water (20 g/l at 20° C), and very soluble in organic solvents. U.S. annual production is about 250,000 tons.

Methylene chloride is a common industrial solvent found in insecticides, metal cleaners, paint, and paint and varnish removers.

Methylene chloride is not generally regarded as highly toxic to humans. Most human toxicity data are for exposure by inhalation. Inhaled methylene chloride acts as a central nervous system depressant. There is also evidence that the compound causes heart failure when large amounts are inhaled.

Methylene chloride does produce mutation in tests for this effect. In addition, a bioassay recognized for its extremely high sensitivity to strong and weak carcinogens produced results which were marginally significant. Thus potential carcinogenic effects of methylene chloride are not confirmed or denied, but are under continuous study. These studies are difficult to conduct for two reasons. First, the low boiling point (40°C) of methylene chloride makes it difficult to maintain the compound at 37°C during incubation. Secondly, all impurities must be removed because the impurities themselves may be carcinogenic. These complications also make the test results difficult to interpret.

For the protection of human health from the potential carcinogenic effects due to exposure to methylene chloride through ingestion of contaminated water and contaminated aquatic organisms, the ambient water concentration should be zero based on the non-threshold assumption for this chemical. However, zero level may not be attainable at the present time. Therefore, the levels hwich may result in incremental increase of cancer risk over the lifetime are estimated at 10^{-5}, 10^{-6} and 10^{-7}. The corresponding recommended criteria are 0.0019 mg/l, 0.00019 mg/l, and 0.000019 mg/l.

The behavior of methylene chloride in POTW has not been studied in any detail. However, the biochemcial oxidation of this compound was studied in one laboratory scale study at concentrations higher than those expected to be contained by most municipal wastewaters. After five days no degradation of methylene chloride was observed. The conclusion reached is that biological treatment produces little or no removal by degradation of methylene chloride in POTW.

The high vapor pressure of methylene chloride is expected to result in volatilization of the compound from aerobic treatment steps in a POTW. It has been reported that methylene chloride inhibits anaerobic processes in a POTW. Methylene chloride that is not volatilized in the POTW is expected to pass through into the effluent.

The most recent EPA study of POTW removal of toxic organics indicates that methylene chloride is approximately 58 percent removed.

Isophorone (54). Isophorone is an industrial chemical produced at a level of tens of millions of pounds annually in the U.S. The chemical name for isophorone is 3,5,5-trimethyl-2cyclohexen-1-one and it is also known as trimethyl cyclohexanone and iso-acetophorone. The formula is $C_6H_5(CH_3)_3O$. Normally, it is produced as the gamma isomer; technical grades contain about 3 percent of the beta isomer (3,5,5-trimethyl-3-cyclohexen-1-one). cyclohexen-1-one). The pure gamma isomer is a water-white liquid, with vapor pressure less than 1 mm Hg at room temperature, and a boiling point of 215.2° C. It has a camphor- or peppermint-like odor and yellows upon standing. It is slightly soluble (12 mg/l) in water and dissolves in fats and oils.

Isophorone is synthesized from acetone and is used commercially as a solvent or cosolvent for finishes, lacquers, polyvinyl and nitrocellulose resins, pesticides, herbicides, fats, oils, and gums. It is also used as a chemical feedstock.

Because isophorone is an industrially used solvent, most toxicity data are for inhalation exposure. Oral administration to laboratory animals in two different studies revealed no acute or chronic effects during 90 days, and no hematological or pathological abnormalities were reported. Apparently, no studies have been completed on the carcinogenicity of isophorone.

Isophorone does undergo bioconcentration in the lipids of aquatic organisms and fish.

Based on subacute data, the ambient water quality criterion for isophorone ingested through consumption of water and organisms is set at 5.2 mg/l for the protection of human health from its toxic properties.

Studies of the effects of isophorone on fish and aquatic organisms reveal relatively low toxicity, compared to some other toxic pollutants.

The behavior of isophorone in a POTW has not been studied. However, the biochemical oxidation of many of the toxic organic pollutants has been investigated in laboratory scale studies at concentrations higher than would normally be expected in municipal wastewaters. General observations relating molecular structure to ease of degradation have been developed for all of these pollutants. The conclusion reached by the study of the limited data is that biochemical treatment in a POTW produces moderate removal of isophorone. This conclusion is consistent with the

findings of an experimental study of microbiological degradation of isophorone which showed about 45 percent oxidation in 15 to 20 days in domestic wastewater, but only 9 percent in salt water. No data were found on the persistence of isophorone in sewage sludge.

Naphthalene (55). Naphthalene is an aromatic hydrocarbon with two orthocondensed benzene rings and a molecular formula of $C_{10}H_8$. As such it is properly classed as a polynuclear aromatic hydrocarbon (PAH). Pure naphthalene is a white crystalline solid melting at 80°C. For a solid, it has a relatively high vapor pressure (0.05 mm Hg at 20°C), and moderate water solubility (19 mg/l at 20°C). Napthalene is the most abundant single component of coal tar. Production is more than a third of a million tons annually in the U.S. About three fourths of the production is used as feedstock for phthalic anhydride manufacture. Most of the remaining production goes into manufacture of insecticide, dyestuffs, pigments, and pharmaceuticals. Chlorinated and partially hydrogenated naphthalenes are used in some solvent mixtures. Naphthalene is also used as a moth repellent.

Naphthalene, ingested by humans, has reportedly caused vision loss (cataracts), hemolytic anemia, and occasionally, renal disease. These effects of naphthalene ingestion are confirmed by studies on laboratory animals. No carcinogenicity studies are available which can be used to demonstrate carcinogenic activity for naphthalene. Naphthalene does bioconcentrate in aquatic organisms.

There are insufficient data on which to base any ambient water criterion.

Only a limited number of studies have been conducted to determine the effects of naphthalene on aquatic organisms. The data from those studies show only moderate toxicity.

Biochemical oxidation of many of the toxic organic pollutants has been investigated in laboratory scale studies at concentrations higher than would normally be expected in municipal wastewaters. General observations relating molecular structure to ease of degradation have been developed for all of these pollutants. The conclusion reached by study of the limited data is that biological treatment produces a high removal by degradation of naphthalene. One recent study has shown that microorganisms can degrade naphthalene, first to a dihydro compound, and ultimately to carbon dioxide and water.

Naphthalene has been detected in sewage plant effluents at concentrations up to 0.022 mg/l in studies carried out by the U.S. EPA. Influent levels were not reported. The most recent EPA

study of the behavior of toxic organics in POTW indicates that naphthalene is approximately 61 percent removed.

4-Nitrophenol (58). 4-Nitrophenol ($NO_2C_6H_4OH$), also called paranitrophenol, is a colorless to yellowish crystalline solid manufactured commercially by hydrolysis of 4-chloro-nitrobenzene with aqueous sodium hydroxide. 4-Nitrophenol melts at 114°C. Vapor pressure is not cited in the usual sources. 4-Nitrophenol is slightly soluble in water (15 g/l at 25°C) and soluble in organic solvents. This phenol does not react to give a color with 4-aminoantipyrene, and therefore does not contribute to the nonconventional pollutant parameter "Total Phenols." U.S. annual production is about 20,000 tons.

Paranitrophenol is used to prepare phenetidine, acetaphenetidine, azo and sulfur dyes, photochemicals, and pesticides.

The toxic effects of 4-nitrophenol on humans have not been extensively studied. Data from experiments with laboratory animals indicate that exposure to this compound results in methmoglobinemia (a metabolic disorder of blood), shortness of breath, and stimulation followed by depression. Other studies indicate that the compound acts directly on cell membranes, and inhibits certain enzyme systems *in vitro*. No information regarding potential teratogenicity was found. Available data indicate that this compound does not pose a mutagenic hazard to humans. Very limited data for 4-nitrophenol do not reveal potential carcinogenic effects, although the compound has been selected by the national cancer institute for testing under the Carcinogenic Bioassay Program.

No U.S. standards for exposure to 4-nitrophenol in ambient water have been established.

Data on the behavior of 4-nitrophenol in a POTW are not available. However, laboratory scale studies have been conducted at concentrations higher than those expected to be found in municipal wastewaters. Biochemical oxidation using adapted cultures from various sources produced 95 percent degradation in three to six days in one study. Similar results were reported for other studies. Based on these data, and on general observations relating molecular structure to ease of biological oxidation, it is concluded that complete or nearly complete removal of 4-nitrophenol occurs during biological treatment in a POTW.

2,4,-Dinitrophenol (59). 2,4-Dinitrophenol [$(NO_2)_2C_6H_8OH$], a yellow crystalline solid, is manufactured commercially by hydrolysis of 2,4-dinitro-1-chlorobenzene with sodium hydroxide. 2,4-Dinitrophenol sublimes at 114° C. Vapor pressure is not cited in usual sources. It is slightly soluble in water (7.0 g/l

at 25° C) and soluble in organic solvents. This phenol does not react with 4-aminoantipyrene and therefore does not contribute to the nonconventional pollutant parameter "Total Phenols." U.S. annual production is about 500 tons.

2,4-Dinitrophenol is used to manufacture sulfur and azo dyes, photochemicals, explosives, and pesticides.

The toxic effects of 2,4-dinitrophenol in humans is generally attributed to their ability to uncouple oxidative phosphorylation. In brief, this means that sufficient 2,4-dinitrophenol short-circuits cell metabolism by preventing utilization of energy provided by respiration and glycolysis. Specific symptoms are gastrointestinal disturbances, weakness, dizziness, headache, and loss of weight. More acute poisoning includes symptoms such as: burning thirst, agitation, irregular breathing, and abnormally high fever. This compound also inhibits other enzyme systems; and acts directly on the cell membrane, inhibiting chloride permeability. Ingestion of 2,4-dinitrophenol also causes cataracts in humans.

Based on available data it appears unlikely that 2,4-dinitrophenol poses a teratogenic hazard to humans. Results of studies of mutagenic activity of this compound are inconclusive as far as humans are concerned. Available data suggest that 2,4-dinitrophenol does not possess carcinogenic properties.

To protect human health from the adverse effects of 2,4-dinitrophenol ingested in contaminated water and fish, the suggested water quality criterion is 0.070 mg/l .

Data on the behavior of 2,4-dinitrophenol in a POTW are not available. However, laboratory scale studies have been conducted at concentrations higher than those expected to be found in municipal wastewaters. Biochemical oxidation using a phenol-adapted seed culture produced 92 percent degradation in 3.5 hours. Similar results were reported for other studies. Based on these data, and on general observations relating molecular structure to ease of biological oxidation, it is concluded that complete or nearly complete removal of 2,4-dinitrophenol occurs during biological treatment in a POTW.

<u>4,6-Dinitro-o-cresol (60)</u>. 4,6-Dinitro-o-cresol (DNOC) is a yellow crystalline solid derived from o-cresol. DNOC melts at 85.8° C and has a vapor pressure of 0.000052 mm Hg at 20° C. DNOC is sparingly soluble in water (100 mg/l at 20° C), while it is readily soluble in alkaline aqueous solutions, ether, acetone, and alcohol. DNOC is produced by sulfonation of o-cresol followed by treatment with nitric acid.

DNOC is used primarily as a blossom thinning agent on fruit trees and as a fungicide, insecticide, and miticide on fruit trees during the dormant season. It is highly toxic to plants in the growing stage. DNOC is not manufactured in the U.S. as an agricultural chemical. Imports have been decreasing recently with only 30,000 lbs being imported in 1976.

While DNOC is highly toxic to plants, it is also very toxic to humans and is considered to be one of the more dangerous agricultural pesticides. The available literature concerning humans indicates that DNOC may be absorbed in acutely toxic amounts through the respiratory and gastrointestinal tracts and through the skin, and that it accumulates in the blood. Symptoms of poisoning include profuse sweating, thirst, loss of weight, headache, malaise, and yellow staining to the skin, hair, sclera, and conjunctiva.

There is no evidence to suggest that DNOC is teratogenic, mutagenic, or carcinogenic. The effects of DNOC in the human due to chronic exposure are basically the same as those effects resulting from acute exposure. Although DNOC is considered a cumulative poison in humans, cataract formation is the only chronic effect noted in any human or experimental animal study. It is believed that DNOC accumulates in the human body and that toxic symptoms may develop when blood levels exceed 20 mg/kg.

For the protection of human health from the toxic properties of dinitro-o-cresol ingested through water and contaminated aquatic organisms, the ambient water criterion is determined to be 0.0134 mg/l. If contaminated aquatic organisms alone are consumed, excluding the consumption of water, the ambient water criterion is determined to be 0.765 mg/l. No data are available on which to evaluate the adverse effects of 4,6-dinitro-o-cresol on aquatic life.

Some studies have been reported regarding the behavior of DNOC in POTW. Biochemical oxidation of DNOC under laboratory conditions at a concentration of 100 mg/l produced 22 percent degradation in 3.5 hours, using acclimated phenol adapted seed cultures. In addition, the nitro group in the number 4 (para) position seems to impart a destabilizing effect on the molecule. Based on these data and general conclusions relating molecular structure to biochemical oxidation, it is expected that 4,6-dinitro-o-cresol will be biochemically oxidized to a lesser extent than domestic sewage by biological treatment in POTW.

<u>N-nitrosodiphenylamine</u> <u>(62)</u>. N-nitrosodiphenylamine [$(C_6H_5)_2NNO$], also called nitrous diphenylamide, is a yellow crystalline solid manufactured by nitrosation of diphenylamine. It melts at 66°C and is insoluble in water, but soluble in

several organic solvents other than hydrocarbons. Production in the U.S. has approached 1,500 tons per year. The compound is used as a retarder for rubber vulcanization and as a pesticide for control of scorch (a fungus disease of plants).

N-nitroso compounds are acutely toxic to every animal species tested and are also poisonous to humans. N-nitrosodiphenylamine toxicity in adult rats lies in the mid range of the values for 60 N-nitroso compounds tested. Liver damage is the principal toxic effect. N-nitrosodiphenylamine, unlike many other N-nitrosoamines, does not show mutagenic activity. N-nitrosodiphenylamine has been reported by several investigations to be non-carcinogenic. However, the compound is capable of trans-nitrosation and could thereby convert other amines to carcinogenic N-nitrosoamines. Sixty-seven of 87 N-nitrosoamines studied were reported to have carcinogenic activity. No water quality criterion have been proposed for N-nitrosodiphenylamine.

No data are available on the behavior of N-nitrosodiphenylamine in a POTW. Biochemical oxidation of many of the toxic organic pollutants have been investigated, at least in laboratory scale studies, at concentrations higher than those expected to be contained in most municipal wastewaters. General observations have been developed relating molecular structure to ease of degradation for all the toxic organic pollutants. The conclusion reached by study of the limited data is that biological treatment produces little or no removal of N-nitrosodiphenylamine in a POTW. No information is available regarding possible interference by N-nitrosodiphenylamine in POTW processes, or on the possible detrimental effect on sludge used to amend soils in which crops are grown. However, no interference or detrimental effects are expected because N-nitroso compounds are widely distributed in the soil and water environment, at low concentrations, as a result of microbial action on nitrates and nitrosatable compounds.

Pentachlorophenol (64). Pentachlorophenol (C_6Cl_5OH) is a white crystalline solid produced commercially by chlorination of phenol or polychlorophenols. U.S. annual production is in excess of 20,000 tons. Pentachlorophenol melts at 190°C and is slightly soluble in water (14 mg/l). Pentachlorophenol is not detected by the 4-amino antipyrene method.

Pentachlorophenol is a bactericide and fungicide and is used for preservation of wood and wood products. It is competitive with creosote in that application. It is also used as a preservative in glues, starches, and photographic papers. It is an effective algicide and herbicide.

Although data are available on the human toxicity effects of pentachlorophenol, interpretation of data is frequently uncertain. Occupational exposure observations must be examined carefully because exposure to pentachlorophenol is frequently accompanied by exposure to other wood preservatives. Additionally, experimental results and occupational exposure observations must be examined carefully to make sure that observed effects are produced by the pentachlorophenol itself and not by the by-products which usually contaminate pentachlorophenol.

Acute and chronic toxic effects of pentachlorophenol in humans are similar; muscle weakness, headache, loss of appetite, abdominal pain, weight loss, and irritation of skin, eyes, and respiratory tract. Available literature indicates that pentachlorophenol does not accumulate in body tissues to any significant extent. Studies on laboratory animals of distribution of the compound in body tissues showed the highest levels of pentachlorophenol in liver, kidney, and intestine, while the lowest levels were in brain, fat, muscle, and bone.

Toxic effects of pentachlorophenol in aquatic organisms are much greater at pH 6 where this weak acid is predominantly in the undissociated form than at pH 9 where the ionic form predominates. Similar results were observed in mammals where oral lethal doses of pentachlorophenol were lower when the compound was administered in hydrocarbon solvents (un-ionized form) than when it was administered as the sodium salt (ionized form) in water.

There appear to be no significant teratogenic, mutagenic, or carcinogenic effects of pentachlorophenol.

For the protection of human health from the toxic properties of pentachlorophenol ingested through water and through contaminated aquatic organisms, the derived level is determined to be 1.01 mg/l.

Some data are available on the behavior of pentachlorophenol in a POTW. Pentachlorophenol has been found in the influent to a POTW. In a study of one POTW the mean removal was 59 percent over a seven day period. Trickling filters removed 44 percent at the influent pentachlorophenol, suggesting that biological degradation occurs. The same report compared removal of pentachlorophenol at the same plant and two additional POTW facilities on a later date and obtained values of 4.4, 19.5 and 28.6 percent removal, the last value being for the plant which was 59 percent removal in the original study. Influent concentrations of pentachlorophenol ranged from 0.0014 to 0.0046 mg/l. Other studies, including the general review of data relating molecular structure to biological oxidation, indicate that pentachlorophenol is not

removed by biological treatment processes in a POTW. Anaerobic digestion processes are inhibited by 0.4 mg/l pentachlorophenol. The most recent EPA study of the behavior of toxic organics in a POTW indicates that pentachlorophenol is 52 percent removed.

The low water solubility and low volatility of pentachlorophenol lead to the expectation that most of the compound will remain in the sludge in a POTW. The effect on plants grown on land treated with pentachlorophenol-containing sludge is unpredictable. Laboratory studies show that this compound affects crop germination at 5.4 mg/l. However, photodecomposition of pentachlorophenol occurs in sunlight. The effects of the various breakdown products which may remain in the soil was not found in the literature.

Phenol (65). Phenol, also called hydroxybenzene and carbolic acid, is a clear, colorless, hygroscopic, deliquescent, crystalline solid at room temperature. Its melting point is 43°C and its vapor pressure at room temperature is 0.35 mm Hg. It is very soluble in water (67 g/l at 16°C) and can be dissolved in benzene, oils, and petroleum solids. Its formula is C_6H_5OH.

Although a small percent of the annual production of phenol is derived from coal tar as a naturally occuring product, most of the phenol is synthesized. Two of the methods are fusion of benzene sulfonate with sodium hydroxide, and oxidation of cumene followed by cleavage with a catalyst. Annual production in the U.S. is in excess of one million tons. Phenol is generated during distillation of wood and the microbiological decomposition of organic matter in the mammalian intestinal tract.

Phenol is used as a disinfectant, in the manufacture of resins, dyestuffs, and in pharmaceuticals, and in the photo processing industry. In this discussion, phenol is the specific compound which is separated by methylene chloride extraction of an acidified sample and identified and quantified by GC/MS. Phenol also contributes to the "Total Phenols," discussed elsewhere which are determined by the 4-AAP colorimetric method.

Phenol exhibits acute and sub-acute toxicity in humans and laboratory animals. Acute oral doses of phenol in humans cause sudden collapse and unconsciousness by its action on the central nervous system. Death occurs by respiratory arrest. Sub-acute oral doses in mammals are rapidly absorbed and quickly distributed to various organs, then cleared from the body by urinary excretion and metabolism. Long term exposure by drinking phenol contaminated water has resulted in statistically significant increase in reported cases of diarrhea, mouth sores, and burning of the mouth. In laboratory animals, long term oral administration at low levels produced slight liver and kidney damage. No

reports were found regarding carcinogenicity of phenol administered orally - all carcinogenicity studies were skin test.

For the protection of human health from phenol ingested through water and through contaminated aquatic organisms, the concentration in water should not exceed 3.5 mg/l.

Fish and other aquatic organisms demonstrated a wide range of sensitivities to phenol concentration. However, acute toxicity values were at moderate levels when compared to other toxic organic pollutants.

Data have been developed on the behavior of phenol in a POTW. Phenol is biodegradable by biota present in a POTW. The ability of a POTW to treat phenol-bearing influents depends upon acclimation of the biota and the constancy of the phenol concentration. It appears that an induction period is required to build up the population of organisms which can degrade phenol. Too large a concentration will result in upset or pass though in the POTW, but the specific level causing upset depends on the immediate past history of phenol concentrations in the influent. Phenol levels as high as 200 mg/l have been treated with 95 percent removal in a POTW, but more or less continuous presence of phenol is necessary to maintain the population of microorganisms that degrade phenol.

Phenol which is not degraded is expected to pass through the POTW because of its very high water solubility. However, in a POTW where chlorination is practiced for disinfection of the POTW effluent, chlorination of phenol may occur. The products of that reaction may be toxic pollutants.

The EPA has developed data on influent and effluent concentrations of total phenols in a study of 103 POTW facilities. However, the analytical procedure was the 4-AAP method mentioned earlier and not the GC/MS method specifically for phenol. Discussion of the study, which of course includes phenol, is presented under the pollutant heading "Total Phenols." The most recent study by EPA on the behavior of toxic organics in a POTW indicates that phenol is 96 percent removed.

Phthalate Esters (66-71). Phthalic acid, or 1,2-benzenedicarboxylic acid, is one of three isomeric benzenedicarboxylic acids produced by the chemical industry. The other two isomeric forms are called isophthalic and terephthalic acids. The formula for all three acids is $C_6H_4(COOH)_2$. Some esters of phthalic acid are designated as toxic pollutants. They will be discussed as a group here, and specific properties of individual phthalate esters will be discussed afterwards.

Phthalic acid esters are manufactured in the U.S. at an annual rate in excess of one billion pounds. They are used as plasticizers - primarily in the production of polyvinyl chloride (PVC) resins. The most widely used phthalate plasticizer is bis (2-ethylhexyl) phthalate (66) which accounts for nearly one-third of the phthalate esters produced. This particular ester is commonly referred to as dioctyl phthalate (DOP) and should not be confused with one of the less used esters, di-n-octyl phthalate (69), which is also used as a plasticizer. In addition to these two isomeric dioctyl phthalates, four other esters, also used primarily as plasticizers, are designated as toxic pollutants. They are: butyl benzyl phthalate (67), di-n-butyl phthalate (68), diethyl phthalate (70), and dimethyl phthalate (71).

Industrially, phthalate esters are prepared from phthalic anhydride and the specific alcohol to form the ester. Some evidence is available suggesting that phthalic acid esters also may be synthesized by certain plant and animal tissues. The extent to which this occurs in nature is not known.

Phthalate esters used as plasticizers can be present in concentrations up to 60 percent of the total weight of the PVC plastic. The plasticizer is not linked by primary chemical bonds to the PVC resin. Rather, it is locked into the structure of intermeshing polymer molecules and held by van der Waals forces. The result is that the plasticizer is easily extracted. Plasticizers are responsible for the odor associated with new plastic toys or flexible sheet that has been contained in a sealed package.

Although the phthalate esters are not soluble or are only very slightly soluble in water, they do migrate into aqueous solutions placed in contact with the plastic. Thus, industrial facilities with tank linings, wire and cable coverings, tubing, and sheet flooring of PVC are expected to discharge some phthalate esters in their raw waste. In addition to their use as plasticizers, phthalate esters are used in lubricating oils and pesticide carriers. These also can contribute to industrial discharge of phthalate esters.

From the accumulated data on acute toxicity in animals, phthalate esters may be considered as having a rather low order of toxicity. Human toxicity data are limited. It is thought that the toxic effect of the esters is most likely due to one of the metabolic products, in particular the monoester. Oral acute toxicity in animals is greater for the lower molecular weight esters than for the higher molecular weight esters.

Orally administered phthalate esters generally produced enlarging of liver and kidney, and atrophy of testes in laboratory animals.

Specific esters produced enlargement of heart and brain, spleenitis, and degeneration of central nervous system tissue.

Subacute doses administered orally to laboratory animals produced some decrease in growth and degeneration of the testes. Chronic studies in animals showed similar effects to those found in acute and subacute studies, but to a much lower degree. The same organs were enlarged, but pathological changes were not usually detected.

A recent study of several phthalic esters produced suggestive but not conclusive evidence that dimethyl and diethyl phthalates have a cancer liability. Only four of the six toxic pollutant esters were included in the study. Phthalate esters do bioconcentrate in fish. The factors, weighted for relative consumption of various aquatic and marine food groups, are used to calculate ambient water quality criteria for four phthalate esters. The values are included in the discussion of the specific esters.

Studies of toxicity of phthalate esters in freshwater and salt water organisms are scarce. A chronic toxicity test with bis(2-ethylhexyl) phthalate showed that significant reproductive impairment occurred at 0.003 mg/l in the freshwater crustacean, Daphnia magna. In acute toxicity studies, saltwater fish and organisms showed sensitivity differences of up to eight-fold to butyl benzyl, diethyl, and dimethyl phthalates. This suggests that each ester must be evaluated individually for toxic effects.

The biochemical oxidation of many of the toxic organic pollutants has been investigated in laboratory scale studies at concentrations higher than would normally be expected in municipal wastewaters. Three of the phthalate esters were studied. Bis(2-ethylhexyl) phthalate was found to be degraded slightly or not at all and its removal by biological treatment in a POTW is expected to be slight or zero. Di-n-butyl phthalate and diethyl phthalate were degraded to a moderate degree and their removal by biological treatment in a POTW is expected to occur to a moderate degree. Using these data and other observations relating molecular structure to ease of biochemical degradation of other toxic organic pollutants, the conclusion was reached that butyl benzyl phthalate and dimethyl phthalate would be removed in a POTW to a moderate degree by biological treatment. On the same basis, it was concluded that di-n-octyl phthalate would be removed to a slight degree or not at all. An EPA study of seven POTW facilities revealed that for all but di-n-octyl phthalate, which was not studied, removals ranged from 62 to 87 percent. The most recent EPA study of the behavior of toxic organics in POTW indicates removals ranging from 48 percent to 81 percent for the six phthalate esters designated as toxic pollutants.

No information was found on possible interference with POTW operation or the possible effects on sludge by the phthalate esters. The water insoluble phthalate esters - butyl benzyl and di-n-octyl phthalate - would tend to remain in sludge, whereas the other four toxic pollutant phthalate esters with water solubilities ranging from 50 mg/l to 4.5 mg/l would probably pass through into the POTW effluent.

Bis(2-ethylhexyl) phthalate (66). In addition to the general remarks and discussion on phthalate esters, specific information on bis(2-ethylhexyl) phthalate is provided. Little information is available about the physical properties of bis(2-ethylhexyl) phthalate. It is a liquid boiling at 387°C at 5mm Hg and is insoluble in water. Its formula is $C_6H_4(COOC_8H_{17})_2$. This toxic pollutant constitutes about one-third of the phthalate ester production in the U.S. It is commonly referred to as dioctyl phthalate, or DOP, in the plastics industry where it is the most extensively used compound for the plasticization of polyvinyl chloride (PVC). Bis(2-ethylhexyl) phthalate has been approved by the FDA for use in plastics in contact with food. Therefore, it may be found in wastewaters coming in contact with discarded plastic food wrappers as well as the PVC films and shapes normally found in industrial plants. This toxic pollutant is also a commonly used organic diffusion pump oil, where its low vapor pressure is an advantage.

For the protection of human health from the toxic properties of bis(2-ethylhexyl) phthalate ingested through water and through contaminated aquatic organisms, the ambient water quality criterion is determined to be 15 mg/l. If contaminated aquatic organisms alone are consumed, excluding the consumption of water, the ambient water criteria is determined to be 50 mg/l.

Biochemical oxidation of this toxic pollutant has been studied on a laboratory scale at concentrations higher than would normally be expected in municipal wastewater. In fresh water with a non-acclimated seed culture no biochemical oxidation was observed after 5, 10, and 20 days. However, with an acclimated seed culture, biological oxidation occured to the extents of 13, 0, 6, and 23 percent of theoretical after 5, 10, 15 and 20 days, respectively. Bis(2-ethylhexyl) phthalate concentrations were 3 to 10 mg/l. Little or no removal of bis(2-ethylhexyl) phthalate by biological treatment in a POTW is expected. The most recent EPA study of the behavior of toxic organics in a POTW indicates that bis(2-ethylhexyl) phthalate is 62 percent removed.

Butyl Benzyl Phthalate (67). In addition to the general remarks and discussion on phthalate esters, specific information on butyl benzyl phthalate is provided. No information was found on the physical properties of this compound.

Butyl benzyl phthalate is used as a plasticizer for PVC. Two special applications differentiate it from other phthalate esters. It is approved by the U.S. FDA for food contact in wrappers and containers; and it is the industry standard for plasticization of vinyl flooring because it provides stain resistance.

No ambient water quality criterion is proposed for butyl benzyl phthalate.

Butyl benzyl phthalate removal in a POTW by biological treatment is expected to occur to a moderate degree. The most recent EPA study of the behavior of toxic organics in POTW indicates that butyl benzyl phthalate is 59 percent removed.

Di-n-butyl phthalate (68). In addition to the general remarks and discussion on phthalate esters, specific information on di-n-butyl phthalate (DBP) is provided. DBP is a colorless, oil liquid, boiling at 340°C. Its water solubility at room temperature is reported to be 0.4 g/l and 4.5 g/l in two different chemistry handbooks. The formula for DBP, $C_6H_4(COOC_4H_9)_2$ is the same as for its isomer, di-isobutyl phthalate. DBP production is 1 to 2 percent of total U.S. phthalate ester production.

Dibutyl phthalate is used to a limited extent as a plasticizer for polyvinyl chloride (PVC). It is not approved for contact with food. It is used in liquid lipsticks and as a diluent for polysulfide dental impression materials. DBP is used as a plasticizer for nitrocellulose in making gun powder, and as a fuel in solid propellants for rockets. Further uses are insecticides, safety glass manufacture, textile lubricating agents, printing inks, adhesives, paper coatings, and resin solvents.

For protection of human health from the toxic properties of dibutyl phthalate ingested through water and through contaminated aquatic organisms, the ambient water quality criterion is determined to be 34 mg/l. If contaminated aquatic organisms alone are consumed, excluding the consumption of water, the ambient water criterion is 154 mg/l.

Biochemical oxidation of this toxic pollutant has been studied on a laboratory scale at concentrations higher than would normally be expected in municipal wastewaters. Biochemical oxidation of 35, 43, and 45 percent of theoretical oxidation were obtained after 5, 10, and 20 days, respectively, using sewage microorganisms as an unacclimated seed culture.

Biological treatment in a POTW is expected to remove di-n-butyl phthalate to a moderate degree. The most recent EPA study of the

behavior of toxic organics in a POTW indicates that di-n-butyl phthalate is 48 percent removed.

Di-n-octyl phthalate (69). In addition to the general remarks and discussion on phthalate esters, specific information on di-n-octyl phthalate is provided. Di-n-octyl phthalate is not to be confused with the isomeric bis(2-ethylhexyl) phthalate which is commonly referred to in the plastics industry as DOP. Di-n-octyl phthalate is a liquid which boils at 220°C at 5 mm Hg. It is insoluble in water. Its molecular formula is $C_6H_4(COOC_8H_{17})_2$. Its production constitutes about 1 percent of all phthalate ester production in the U.S.

Industrially, di-n-octyl phthalate is used to plasticize polyvinyl chloride (PVC) resins.

No ambient water quality criterion is proposed for di-n-octyl phthalate.

Biological treatment in a POTW is expected to lead to little or no removal of di-n-octyl phthalate. The most recent EPA study of the behavior of toxic organics in POTW indicates that di-n-octyl phthalate is 81 percent removed.

Diethyl phthalate (70). In addition to the general remarks and discussion on phthalate esters, specific information on diethyl phthalate is provided. Diethyl phthalate, or DEP, is a colorless liquid boiling at 296° C, and is insoluble in water. Its molecular formula is $C_6H_4(COOC_2H_5)_2$. Production of diethyl phthalate constitutes about 1.5 percent of phthalate ester production in the U.S.

Diethyl phthalate is approved for use in plastic food containers by the U.S. FDA. In addition to its use as a polyvinyl chloride (PVC) plasticizer, DEP is used to plasticize cellulose nitrate for gun powder, to dilute polysulfide dental impression materials, and as an accelerator for dyeing triacetate fibers. An additional use which would contribute to its wide distribution in the environment is as an approved special denaturant for ethyl alcohol. The alcohol-containing products for which DEP is an approved denaturant include a wide range of personal care items such as bath preparations, bay rum, colognes, hair preparations, face and hand creams, perfumes and toilet soaps. Additionally, this denaturant is approved for use in biocides, cleaning solutions, disinfectants, insecticides, fungicides, and room deoderants which have ethyl alcohol as part of the formulation. It is expected, therefore, that people and buildings would have some surface loading of this toxic pollutant which would find its way into raw wastewaters.

For the protection of human health from the toxic properties of diethyl phthalate ingested through water and through contaminated aquatic organisms, the ambient water quality criterion is determined to be 350 mg/l. If contaminated aquatic organisms alone are consumed, excluding the consumption of water, the ambient water criterion is 1,800 mg/l.

Biochemical oxidation of this toxic pollutant has been studied on a laboratory scale at concentrations higher than would normally be expected in municipal wastewaters. Biochemical oxidation of 79, 84, and 89 percent of theoretical was observed after 5, 15, and 20 days respectively. Biological treatment in a POTW is expected to lead to a moderate degree of removal of diethyl phthalate. The most recent EPA study of the behavior of toxic organics in POTW indicates that diethyl phthalate is 74 percent removed.

Dimethyl Phthalate (71). In addition to the general remarks and discussion on phthalate esters, specific information on dimethyl phthalate (DMP) is provided. DMP has the lowest molecular weight of the phthalate esters - M.W. = 194 compared to M.W. of 391 for bis(2-ethylhexyl) phthalate. DMP has a boiling point of 282°C. It is a colorless liquid, soluble in water to the extent of 5 mg/l. Its molecular formula is $C_6H_4((C)CH_3)_2$.

Dimethyl phthalate production in the U.S. is just under one percent of total phthalate ester production. DMP is used to some extent as a plasticizer in cellulosics; however, its principal specific use is for dispersion of polyvinylidene fluoride (PVDF). PVDF is resistant to most chemicals and finds use as electrical insulation, chemical process equipment (particularly pipe), and as a case for long-life finishes for exterior metal siding. Coil coating techniques are used to apply PVDF dispersions to aluminum or galvanized steel siding.

For the protection of human health from the toxic properties of dimethyl phthalate ingested through water and through contaminated aquatic organisms, the ambient water criterion is determined to be 313 mg/l. If contaminated aquatic organisms alone are consumed, excluding the consumption of water, the ambient water criterion is 2,900 mg/l.

Based on limited data and observations relating molecular structure to ease of biochemical degradation of other toxic organic pollutants, it is expected that dimethyl phthalate will be biochemically oxidized to a lesser extent than domestic sewage by biological treatment in a POTW. The most recent EPA study of the behavior of toxic organics in a POTW indicates that dimethyl phthalate is 50 percent removed.

Polynuclear Aromatic Hydrocarbons (72-84). The polynuclear aromatic hydrocarbons (PAH) selected as toxic pollutants are a group of 13 compounds consisting of substituted and unsubstituted polycyclic aromatic rings. The general class of PAH includes heterocyclics, but none of those were selected as toxic pollutants. PAH are formed as the result of incomplete combustion when organic compounds are burned with insufficient oxygen. PAH are found in coke oven emissions, vehicular emissions, and volatile products of oil and gas burning. The compounds chosen as toxic pollutants are listed with their structural formula and melting point (m.p.). All are insoluble in water.

72 Benzo(a)anthracene (1,2-benzanthracene) m.p. 162°C

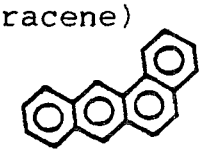

73 Benzo(a)pyrene (3,4-benzopyrene) m.p. 176°C

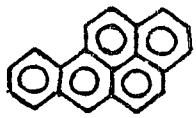

74 3,4-Benzofluoranthene m.p. 168°C

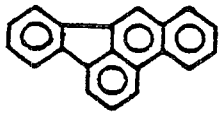

75 Benzo(k)fluoranthene (11,12-benzofluoranthene) m.p. 217 C

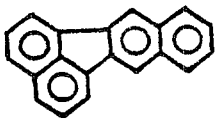

76 Chrysene (1,2-benzphenanthrene) m.p. 255°C

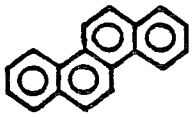

77 Acenaphthylene m.p. 92°C

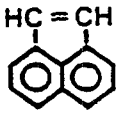

78 Anthracene m.p. 216°C

79 Benzo(ghi)perylene (1,12-benzoperylene) m.p. not reported

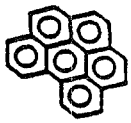

80 Fluorene (alpha-diphenylenemethane) m.p. 116°C

81 Phenanthrene 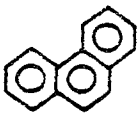 m.p. 101°C

82 Dibenzo(a,h)anthracene (1,2,5,6dibenzoanthracene)
m.p. 269°C

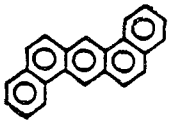

83 Indeno (1,2,3-cd)pyrene (2,3-o-phenylenepyrene)
m.p. not available

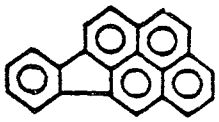

84 Pyrene 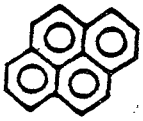 m.p. 156°C

Some of these toxic pollutants have commercial or industrial uses. Benzo(a)anthracene, benzo(a)pyrene, chrysene, anthracene, dibenzo(a,h)anthracene, and pyrene are all used as antioxidants. Chrysene, acenaphthylene, anthracene, fluorene, phenanthrene, and pyrene are all used for synthesis of dyestuffs or other organic chemicals. 3,4-Benzofluoranthrene, benzo(k)fluoranthene, benzo-(ghi)perylene, and indeno (1,2,3-cd)pyrene have no known industrial uses, according to the results of a recent literature search.

Several of the PAH toxic pollutants are found in smoked meats, in smoke flavoring mixtures, in vegetable oils, and in coffee. Consequently, they are also found in many drinking water supplies. The wide distribution of these pollutants in complex mixtures with the many other PAHs which have not been designated as toxic pollutants results in exposures by humans that cannot be associated with specific individual compounds.

The screening and verification analysis procedures used for the toxic organic pollutants are based on gas chromatography (GC). Three pairs of the PAH have identical elution times on the column specified in the protocol, which means that the parameters of the pair are not differentiated. For these three pairs anthracene

(78) - phenanthrene (81); 3,4-benzofluoranthene (74) - benzo(k)-fluoranthene (75); and benzo(a)anthracene (72) - chrysene (76) results are obtained and reported as "either-or." Either both are present in the combined concentration reported, or one is present in the concentration reported.

There are no studies to document the possible carcinogenic risks to humans by direct ingestion. Air pollution studies indicate an excess of lung cancer mortality among workers exposed to large amounts of PAH containing materials such as coal gas, tars, and coke-oven emissions. However, no definite proof exists that the PAH present in these materials are responsible for the cancers observed.

Animal studies have demonstrated the toxicity of PAH by oral and dermal administration. The carcinogenicity of PAH has been traced to formation of PAH metabolites which, in turn, lead to tumor formation. Because the levels of PAH which induce cancer are very low, little work has been done on other health hazards resulting from exposure. It has been established in animal studies that tissue damage and systemic toxicity can result from exposure to non-carcinogenic PAH compounds.

Because there were no studies available regarding chronic oral exposures to PAH mixtures, proposed water quality criteria were derived using data on exposure to a single compound. Two studies were selected, one involving benzo(a)pyrene ingestion and one involving dibenzo(a,h)anthracene ingestion. Both are known animal carcinogens.

For the maximum protection of human health from the potential carcinogenic effects of exposure to polynuclear aromatic hydrocarbons (PAH) through ingestion of water and contaminated aquatic organisms, the ambient water concentration is zero. Concentrations of PAH estimated to result in additional risk of 1 in 100,000 were derived by the EPA and the Agency is considering setting criteria at an interim target risk level in the range of 10^{-7}, 10^{-6}, or 10^{-5} with corresponding criteria of 2.8×10^{-7} mg/l, 2.8×10^{-6} mg/l, and 2.8×10^{-5} mg/l, respectively.

No standard toxicity tests have been reported for freshwater or saltwater organisms and any of the 13 PAH discussed here.

The behavior of PAH in a POTW has received only a limited amount of study. It is reported that up to 90 percent of PAH entering a POTW will be retained in the sludge generated by conventional sewage treatment processes. Some of the PAH can inhibit bacterial growth when they are present at concentrations as low as 0.018 mg/l. Biological treatment in activated sludge units has been shown to reduce the concentration of phenanthrene and

anthracene to some extent; however, a study of biochemical oxidation of fluorene on a laboratory scale showed no degradation after 5, 10, and 20 days. On the basis of that study and studies of other toxic organic pollutants, some general observations were made relating molecular structure to ease of degradation. Those observations lead to the conclusion that the 13 PAH selected to represent that group as toxic pollutants will be removed only slightly or not at all by biological treatment methods in a POTW. Based on their water insolubility and tendency to attach to sediment particles very little pass through of PAH to POTW effluent is expected. The most recent EPA study of the behavior of toxic organics in POTW indicates that removals for five of the 13 PAH range from 40 percent to 83 percent.

No data are available at this time to support any conclusions about contamination of land by PAH on which sewage sludge containing PAH is spread.

Tetrachloroethylene (85). Tetrachloroethylene (CCL_2CCl_2), also called perchloroethylene and PCE is a colorless, nonflammable liquid produced mainly by two methods - chlorination and pyrolysis of ethane and propane, and oxychlorination of dichloroethane. U.S. annual production exceeds 300,000 tons. PCE boils at 121°C and has a vapor pressure of 19 mm Hg at 20°C. It is insoluble in water but soluble in organic solvents.

Approximately two-thirds of the U.S. production of PCE is used for dry cleaning. Textile processing and metal degreasing, in equal amounts consume about one-quarter of the U.S. production.

The principal toxic effect of PCE on humans is central nervous system depression when the compound is inhaled. Headache, fatigue, sleepiness, dizziness, and sensations of intoxication are reported. Severity of effects increases with vapor concentration. High integrated exposure (concentration times duration) produces kidney and liver damage. Very limited data on PCE ingested by laboratory animals indicate liver damage occurs when PCE is administered by that route. PCE tends to distribute to fat in mammalian bodies.

One report found in the literature suggests, but does not conclude, that PCE is teratogenic. PCE has been demonstrated to be a liver carcinogen in B6C3-F1 mice.

For the maximum protection of human health from the potential carcinogenic effects of exposure to tetrachlorethylene through ingestion of water and contaminated aquatic organisms, the ambient water concentration is zero. Concentrations of tetrachloroethylene estimated to result in additional lifetime cancer risk

levels of 10^{-7}, 10^{-6}, and 10^{-5} are 0.00008 mg/l, and 0.0008 mg/l, and 0.008 mg/l, respectively.

Many of the toxic organic pollutants have been investigated, at least in laboratory scale studies, at concentrations higher than those expected to be contained by most municipal wastewaters. General observations have been developed relating molecular structure to ease of degradation for all of the toxic organic pollutants. The conclusions reached by the study of the limited data is that biological treatment produces a moderate removal of PCE in a POTW by degradation. No information was found to indicate that PCE accumulates in the sludge, but some PCE is expected to be adsorbed onto settling particles. Some PCE is expected to be volatilized in aerobic treatment processes and little, if any, is expected to pass through into the effluent from the POTW. The most recent EPA study of the behavior of toxic organics in POTW indicates that PCE is 81 percent removed.

Toluene (86). Toluene is a clear, colorless liquid with a benzene-like odor. It is a naturally occuring compound derived primarily from petroleum or petrochemical processes. Some toluene is obtained from the manufacture of metallurgical coke. Toluene is also referred to as totuol, methylbenzene, methacide, and phenylmethane. It is an aromatic hydrocarbon with the formula $C_6H_5CH_3$. It boils at 111°C and has a vapor pressure of 30 mm Hg at room temperature. The water solubility of toluene is 535 mg/l, and it is miscible with a variety of organic solvents. Annual production of toluene in the U.S. is greater than two million metric tons. Approximately two-thirds of the toluene is converted to benzene and the remaining 30 percent is divided approximately equally into chemical manufacture, and use as a paint solvent and aviation gasoline additive. An estimated 5,000 metric tons is discharged to the environment anually as a constituent in wastewater.

Most data on the effects of toluene in human and other mammals have been based on inhalation exposure or dermal contact studies. There appear to be no reports of oral administration of toluene to human subjects. A long term toxicity study on female rats revealed no adverse effects on growth, mortality, appearance and behavior, organ to body weight ratios, blood-urea nitrogen levels, bone marrow counts, peripheral blood counts, or morphology of major organs. The effects of inhaled toluene on the central nervous system, both at high and low concentrations, have been studied in humans and animals. However, ingested toluene is expected to be handled differently by the body because it is absorbed more slowly and must first pass through the liver before reaching the nervous system. Toluene is extensively and rapidly metabolized in the liver. One of the principal metabolic prod-

ucts of toluene is benzoic acid, which itself seems to have little potential to produce tissue injury.

Toluene does not appear to be teratogenic in laboratory animals or man. Nor is there any conclusive evidence that toluene is mutagenic. Toluene has not been demonstrated to be positive in any in vitro mutagenicity or carcinogenicity bioassay system, nor to be carcinogenic in animals or man.

Toluene has been found in fish caught in harbor waters in the vicinity of petroleum and petrochemical plants. Bioconcentration studies have not been conducted, but bioconcentration factors have been calculated on the basis of the octanol-water partition coefficient.

For the protection of human health from the toxic properties of toluene ingested through water and through contaminated aquatic organisms, the ambient water criterion is determined to be 14.3 mg/l. If contaminated aquatic organisms alone are consumed excluding the consumption of water, the ambient water criterion is 424 mg/l. Available data show that the adverse effects on aquatic life occur at concentrations as low as 5 mg/l.

Acute toxicity tests have been conducted with toluene and a variety of freshwater fish and Daphnia magna. The latter appears to be significantly more resistant than fish. No test results have been reported for the chronic effects of toluene on freshwater fish or invertebrate species.

The biochemical oxidation of many of the toxic pollutants has been investigated in laboratory scale studies at concentrations greater than those expected to be contained by most municipal wastewaters. At toluene concentrations ranging from 3 to 250 mg/l biochemical oxidation proceeded to 50 percent of theoretical or greater. The time period varied from a few hours to 20 days depending on whether or not the seed culture was acclimated. Phenol adapted acclimated seed cultures gave the most rapid and extensive biochemical oxidation.

Based on study of the limited data, it is expected that toluene will be biochemically oxidized to a lesser extent than domestic sewage by biological treatment in a POTW. The volatility and relatively low water solubility of toluene lead to the expectation that aeration processes will remove significant quantities of toluene from the POTW. The EPA studied toluene removal in seven POTW facilities. The removals ranged from 40 to 100 percent. Sludge concentrations of toluene ranged from 54×10^3 to 1.85 mg/l. The most recent EPA study of the behavior of toxic organics in a POTW indicates that toluene is 90 percent removed.

Trichloroethylene (87). Trichloroethylene (1,1,2-trichloroethylene or TCE) is a clear, colorless liquid boiling at 87°C. It has a vapor pressure of 77 mm Hg at room temperature and is slightly soluble in water (1 g/l). U.S. production is greater than 0.25 million metric tons annually. It is produced from tetrachloroethane by treatment with lime in the presence of water.

TCE is used for vapor phase degreasing of metal parts, cleaning and drying electronic components, as a solvent for paints, as a refrigerant, for extraction of oils, fats, and waxes, and for dry cleaning. Its widespread use and relatively high volatility result in detectable levels in many parts of the environment.

Data on the effects produced by ingested TCE are limited. Most studies have been directed at inhalation exposure. Nervous system disorders and liver damage are frequent results of inhalation exposure. In the short term exposures, TCE acts as a central nervous system depressant - it was used as an anesthetic before its other long term effects were defined.

TCE has been shown to induce transformation in a highly sensitive *in vitro* Fischer rat embryo cell system (F1706) that is used for identifying carcinogens. Severe and persistent toxicity to the liver was recently demonstrated when TCE was shown to produce carcinoma of the liver in mouse strain B6C3F1. One systematic study of TCE exposure and the incidence of human cancer was based on 518 men exposed to TCE. The authors of that study concluded that although the cancer risk to man cannot be ruled out, exposure to low levels of TCE probably does not present a very serious and general cancer hazard.

TCE is bioconcentrated in aquatic species, making the consumption of such species by humans a significant source of TCE. For the protection of human health from the potential carcinogenic effects of exposure to trichloroethylene through ingestion of water and contaminated aquatic organisms, the ambient water concentration should be zero based on the non-threshold assumption of this chemical. However, zero levels may not be attainable at the present time. Therefore, the levels which may result in incremental increase of cancer risk over the lifetime are estimated at 10^{-7}, 10^{-6}, and 10^{-5}. The corresponding recommended criteria are 0.00027 mg/l, 0.0027 mg/l, and 0.027 mg/l. If contaminated aquatic organisms alone are consumed, excluding the consumption of water, the water concentration should be less than 0.807 mg/l to keep the additional lifetime cancer risk below 10^{-5}.

Only a very limited amount of data on the effects of TCE on freshwater aquatic life are available. One species of fish (fat-

head minnows) showed a loss of equilibrium at concentrations below those resulting in lethal effects.

In laboratory scale studies of toxic organic pollutants, TCE was subjected to biochemical oxidation conditions. After 5, 10, and 20 days no biochemical oxidation occurred. On the basis of this study and general observations relating molecular structure to ease of degradation, the conclusion is reached that TCE would undergo no removal by biological treatment in a POTW. The volatility and relatively low water solubility of TCE is expected to result in volatilization of some of the TCE in aeration steps in a POTW. The most recent EPA study of the behavior of toxic organics in a POTW indicates that TCE is 85 percent removed.

Vinyl Chloride (88). No freshwater organisms have been tested with vinyl chloride and no statement can be made concerning acute or chronic toxicity.

For the maximum protection of human health from the potential carcinogenic effects due to exposure of vinyl chloride through ingestion of contaminated water and contaminated aquatic organisms, the ambient water concentrations should be zero based on the non-threshold assumption for this chemical. However, zero level may not be attainable at the present time. Therefore, the levels which may result in incremental increase of cancer risk over the lifetime are estimated at 10^{-5}, 10^{-6}, and 10^{-7}. The corresponding recommended criteria are 0.02 mg/l, 0.002 mg/l, and 0.0002 mg/l, respectively. For consumption of aquatic organisms only, excluding consumption of water, the levels are 5.25 mg/l, 0.525 mg/l, and 0.0525 mg/l, respectively.

Vinyl chloride has been used for over 40 years in producing polyvinyl chloride (PVC) which in turn is the most widely used material in the manufacture of plastics throughout the world. Of the estimated 18 billion pounds of vinyl chloride produced worldwide in 1972, about 25 percent was manufactured in the United States. Production of vinyl chloride in the United States reached slightly over 5 billion pounds in 1978.

Vinyl chloride and polyvinyl chloride are used in the manufacture of numerous products in building and construction, the automotive industry, for electrical wire insulation and cables, piping, industrial and household equipment, packaging for food products, medical supplies, and is depended upon heavily by the rubber, paper, and glass industries. Polyvinyl chloride and vinyl chloride copolymers are distributed and processed in a variety of forms including dry resins, plastisol (dispersions in plasticizers), organosol, (dispersions in plasticizers plus volatile solvent), and latex (colloidal dispersion in water). Latexes are used to coat or impregnant paper, fabric, or leather.

Vinyl chloride (CH_2CHCl; molecular weight 62.5) is a highly flammable chloroolefinic hydrocarbon which emits a sweet or pleasant odor and has a vapor density slightly more than twice that of air. It has a boiling point of -13.9°C and a melting point of -153.8°C. Its solubility in water at 28°C is 0.11 g/100g water and it is soluble in alcohol and very soluble in ether and carbon tetrachloride. Vinyl chloride is volatile and readily passes from solution into the gas phase under most laboratory and ecological conditions. Many salts such as soluble silver and copper salts, ferrous chloride, platinous chloride, iridium dichloride, and mercurous chloride to name a few, have the ability to form complexes with vinyl chloride which results in its increased solubility in water. Conversely, alkali metal salts such as sodium or potassium chloride may decrease the solubility of vinyl chloride in ionic strengths of the aqueous solution. Therefore, the amounts of vinyl chloride in water could be influenced significantly by the presence of salts.

Vinyl chloride introduced into aquatic systems will most probably be quickly transferred to the atmosphere through volatilization. In fact, results from model simulations indicate that vinyl chloride should not remain in an aquatic ecosystem under most natural conditions.

Based on the information found, it does not appear that oxidation hydrolysis, biodegradation or sorption, are important fate processes for vinyl chloride in the aquatic environment.

Based on the 1982 POTW study (cite), the removal efficiency for vinyl chloride at a POTW with secondary treatment is 94 percent.

<u>Endosulfan</u> <u>(97)</u>. For endosulfan the criterion to protect freshwater aquatic life is determined to be 0.000056 mg/l as a 24-hour average and the concentration should not exceed 0.00022 mg/l at any time.

For endosulfan the criterion to protect saltwater aquatic life is determined to be 8.7×10^{-6} mg/l as a 24-hour average and the concentration should not exceed 0.000034 mg/l at any time.

For the protection of human health from the toxic properties of endosulfan ingested through water and contaminated aquatic organisms, the ambient water criterion is determined to be 0.074 mg/l.

For the protection of human health from the toxic properties of endosulfan ingested through contaminated aquatic organisms alone, the ambient water criterion is determined to be 0.159 mg/l.

Endosulfan is a broad-spectrum insecticide of the group of polycyclic chlorinated hydrocarbons called cyclodiene insecticides.

Annual production of endosulfan in the United States was estimated in 1974 at three million pounds. It is presently on the U.S. EPA's restricted list which limits its usage. However, significant commercial use of endosulfan for insect control on vegetables, fruits, and tobacco continues.

Endosulfan is a light to dark brown crystalline solid with a terpene-like odor, having the molecular formula in water of 0.06 to 0.15 mg/l and is readily soluble in organic solvents. The chemical name for endosulfan is 6,7,8,9,10,10hexachloro-1,5,5a,6,9,9a-hexahydro-6,9-methano-2,4,3-benzodioxathiepin-3-oxide.

Technical grade endosulfan has a purity of 95 percent and is composed of a mixture of two steroisomers referred to as alpha and beta or I and II. It has a melting point range of 70 to 100°C and a density of 1.745 at 20°C. The endosulfan isomers are present in the ratio 70 percent isomer I to 30 percent isomer II. Impurities present in technical grade endosulfan consist mainly of the degradation products and may not exceed 2 percent endosulfandiol and 1 percent endosulfan ether. Endosulfan is commercially available in the form of wettable powders, emulsified concentrates, granules, and dusts of various concentrations. It is a powerful contact and stomach insectide used to control a wide spectrum of insects.

Endosulfan is stable to sunlight, but is susceptible to oxidation and the formation of endosulfan sulfate in the presence of growing vegetation. Technical grade endosulfan is sensitive to moisture, bases, and acids and decomposes slowly by hydrolysis to SO_2 and endosulfan alcohol.

In the environment, endosulfan is metabolically converted by microorganisms, plants, and animals to endosulfan sulfate, endosulfandiol, endosulfan ether, endosulfan hydroxyether, and endosulfan lactone.

Endrin (98). Endrin is the common name of one member of the cyclodiene group of pesticides. It is a cyclic hydrocarbon having a chlorine-substituted methanobridge structure. Chemically pure endrin is a white crystalline solid, while the technical compound is a light tan powder. The specific gravity of this compound is 1.7 at 20°C; the vapor pressure is 2.7×10^{-7} at 25°C; and the substance begins to decompose at 200°C. Endrin was introduced into the United States in 1951. The endrin sold in the United States is a technical grade product, containing not less than 95 percent active ingredient, available in a variety of

diluted formulations. Endrin is very insoluble in water, about 0.2 mg/l.

Known uses of endrin in the United States are as an avicide, rodenticide, and insecticide, the latter being the most prevalent. Endrin enters the environment primarily as a result of direct applications to soil and crops. Waste material discharge from endrin manufacturing and formulating plants and disposal of empty containers also contribute significantly to observed residue levels. In the past several years, endrin utilization has been increasingly restricted and production has continued to decline. In 1978, endrin production was approximately 400,000 lbs.

Most of the invertebrate species tested for acute toxicity were substantially more tolerant than fishes in sensitivity. The generally higher tolerance of the insects and related groups was unexpected since endrin is an effective insecticide.

Despite its high acute toxicity, endrin is a relatively nonpersistent pesticide in humans. Endrin residues have only been detected in the body tissues of humans immediately after an acute exposure. However, little is known concerning the persistence and toxicity of endrin metabolites.

No malignancies attributable to endrin exposure have been reported in the literature. Teratogenesis, growth retardation, and increases in fetal mortality have been observed in mice and hamsters following endrin administration. Endrin toxicity seems to result primarily from the effects of endrin and its metabolites on the central nervous system.

The ambient water quality criterion for endrin is recommended to be identical to the existing drinking water standard which is 0.001 mg/l.

POTW removal efficiency is not known at this time.

<u>Polychlorinated Biphenyls (106 - 112)</u>. Polychlorinated 10), designated PCB's, are chlorinated derivatives of biphenyls. The commercial products are complex mixtures of chlorobiphenyls, but are no longer produced in the U.S. The mixtures produced formerly were characterized by the percentage chlorination. Direct chlorination of biphenyl was used to produce mixtures containing from 21 to 70 percent chlorine. Seven of these mixtures have been selected as toxic pollutants:

Toxic Pollutant No.	Name	Percent Chlorine	Range (°C) Distillation	Pour Point (° C)	Water Solubility
	Arochlor				
106	1242	42	325-366	-19	240
107	1254	54	365-390	10	12
108	1221	20.5-21.5	275-320	1	200
109	1232	31.4-32.5	290-325	-35.5	--
110	1248	48	340-375	- 7	54
111	1260	60	385-420	31	2.7
112	1016	41	323-356	--	225-250

The arochlors 1221, 1232, 1016, 1242, and 1248 are colorless, oily liquids; 1254 is a viscous liquid; 1260 is a sticky resin at room temperature. Total annual U.S. production of PCB's averaged about 20,000 tons in 1972 to 1974.

Prior to 1971, PCB's were used in several applications including plasticizers, heat transfer liquids, hydraulic fluids, lubricants, vacuum pump and compressor fluids, and capacitor and transformer oils. After 1970, when PCB use was restricted to closed systems, the latter two uses were the only commercial applications.

The toxic effects of PCB's ingested by humans have been reported to range from acne-like skin eruptions and pigmentation of the skin to numbness of limbs, hearing and vision problems, and spasms. Interpretation of results is complicated by the fact that the very highly toxic polychlorinated dibenzofurans (PCDF's) are found in many commercial PCB mixtures. Photochemical and thermal decomposition appear to accelerate the transformation of PCB's to PCDF's. Thus the specific effects of PCB's may be masked by the effects of PCDF's. However, if PCDF's are frequently present to some extent in any PCB mixture, then their effects may be properly included in the effects of PCB mixtures.

Studies of effects of PCB's in laboratory animals indicate that liver and kidney damage, large weight losses, eye discharges, and interference with some metabolic processes occur frequently. Teratogenic effects of PCB's in laboratory animals have been observed, but are rare. Growth retardations during gestation, and reproductive failure are more common effects observed in studies of PCB teratogenicity. Carcinogenic effects of PCB's have been studied in laboratory animals with results interpreted as positive. Specific reference has been made to liver cancer in rats in the discussion of water quality criterion formulation.

For the maximum protection of human health from the potential carcinogenic effects of exposure to PCB's through ingestion of

water and contaminated aquatic organisms, the ambient water concentration should be zero. Concentrations of PCB's estimated to result in additional lifetime cancer risk at risk levels of 10^{-7}, 10^{-6}, and 10^{-5} are 0.0000079 mg/l, 0.000079 mg/l, and 0.00079 mg/l, respectively.

The behavior of PCB's in a POTW has received limited study. Most PCB's will be removed with sludge. One study showed removals of 82 to 89 percent, depending on suspended solid removal. The PCB's adsorb onto suspended sediments and other particulates. In laboratory scale experiments with PCB 1221, 81 percent was removed by degradation in an activated sludge system in 47 hours. Biodegradation can form polychlorinated dibenzofurans which are more toxic than PCB's (as noted earlier). PCB's at concentrations of 0.1 to 1,000 mg/l inhibit or enhance bacterial growth rates, depending on the bacterial culture and the percentage chlorine in the PCB. Thus, activated sludge may be inhibited by PCB's. Based on studies of bioaccumulation of PCB's in food crops grown on soils amended with PCB-containing sludge, the U.S. FDA has recommended a limit of 10 mg PCB/kg dry weight of sludge used for application to soils bearing food crops.

Antimony (114). Antimony (chemical name - stibium, symbol Sb), classified as a non-metal or metalloid, is a silvery white, brittle crystalline solid. Antimony is found in small ore bodies throughout the world. Principal ores are oxides of mixed antimony valences, and an oxysulfide ore. Complex ores with metals are important because the antimony is recovered as a by-product. Antimony melts at 631°C, and is a poor conductor of electricity and heat.

Annual U.S. consumption of primary antimony ranges from 10,000 to 20,000 tons. About half is consumed in metal products - mostly antimonial lead for lead acid storage batteries, and about half in non-metal products. A principal compound is antimony trioxide which is used as a flame retardant in fabrics, and as an opacifier in glass, ceramics, and enamels. Several antimony compounds are used as catalysts in organic chemicals synthesis, as fluorinating agents (the antimony fluoride), as pigments, and in fireworks. Semiconductor applications are economically significant.

Essentially no information on antimony-induced human health effects has been derived from community epidemiology studies. The available data are in literature relating effects observed with therapeutic or medicinal uses of antimony compounds and industrial exposure studies. Large therapeutic doses of antimonial compounds, usually used to treat schistisomiasis, have caused severe nausea, vomiting, convulsions, irregular heart action, liver damage, and skin rashes. Studies of acute industrial antimony poisoning have revealed loss of appetite,

diarrhea, headache, and dizziness in addition to the symptoms found in studies of therapeutic doses of antimony.

For the protection of human health from the toxic properties of antimony ingested through water and through contaminated aquatic organisms the ambient water criterion is determined to be 0.146 mg/l. If contaminated aquatic organisms are consumed, excluding the consumption of water, the ambient water criterion is determined to be 45 mg/l. Available data show that adverse effects on aquatic life occur at concentrations higher than those cited for human health risks.

The limited solubility of most antimony compounds expected in a POTW, i.e., the oxides and sulfides, suggests that at least part of the antimony entering a POTW will be precipitated and incorporated into the sludge. However, some antimony is expected to remain dissolved and pass through the POTW into the effluent. Antimony compounds remaining in the sludge under anaerobic and very toxic compound. There are no data to show antimony inhibits any POTW processes. The most recent EPA study of the behavior of toxic pollutants in POTW indicates that antimony is 60 percent removed. Antimony is not known to be essential to the growth of plants, and has been reported to be moderately toxic. Therefore, sludge containing large amounts of antimony could be detrimental to plants if it is applied in large amounts to cropland.

Arsenic (115). Arsenic (chemical symbol As), is classified as a non-metal or metalloid. Elemental arsenic normally exists in the alpha-crystalline metallic form which is steel gray and brittle, and in the beta form which is dark gray and amorphous. Arsenic sublimes at 615°C. Arsenic is widely distributed throughout the world in a large number of minerals. The most important commercial source of arsenic is as a by-product from treatment of copper, lead, cobalt, and gold ores. Arsenic is usually marketed as the trioxide (S_2O_3). Annual U.S. production of the trioxide approaches 40,000 tons.

The principal use of arsenic is in agricultural chemicals (herbicides) for controlling weeds in cotton fields. Arsenicals have various applications in medicinal and vetrinary use, as wood preservatives, and in semiconductors.

The effects of arsenic in humans were known by the ancient Greeks and Romans. The principal toxic effects are gastrointestinal disturbances. Breakdown of red blood cells occurs. Symptoms of acute poisoning include vomiting, diarrhea, abdominal pain, lassitude, dizziness, and headache. Longer exposure produced dry, falling hair, brittle, loose nails, eczema, and exfoliation. Arsenicals also exhibit teratogenic and mutagenic effects in humans. Oral administration of arsenic compounds has been

associated clinically with skin cancer for nearly one hundred years. Since 1888 numerous studies have linked occupational exposure and therapeutic administration of arsenic compounds to increased incidence of respiratory and skin cancer.

For the maximum protection of human health from the potential carcinogenic effects of exposure to arsenic through ingestion of water and contaminated aquatic organisms, the ambient water concentration is zero. Concentrations of arsenic estimated to result in additional lifetime cancer risk levels of 10^{-7}, 10^{-6}, 10^{-5} are 2.2×10^{-7} mg/l, 2.2×10^{-6}, and 2.2×10^{-5} mg/l, respectively. If contaminated aquatic organisms alone are consumed, excluding the consumption of water, the water concentration should be less than 1.75×10^{-4} to keep the increased lifetime cancer risk below 10^{-5}. Available data show that adverse effects on aquatic life occur at concentrations higher than those cited for human health risks.

A few studies have been made regarding the behavior of arsenic in a POTW. One EPA survey of nine POTW facilities reported influent concentrations ranging from 0.0005 to 0.693 mg/l; effluents from three a POTW having biological treatment contained 0.0004 to 0.01 mg/l; two POTW facilities showed arsenic removal efficiencies of 50 and 71 percent in biological treatment. Inhibition of treatment processes by sodium arsenate is reported to occur at 0.1 mg/l in activated sludge, and 1.6 mg/l in anaerobic digestion processes. In another study based on data from 60 POTW facilities, arsenic in sludge ranged from 1.6 to 65.6 mg/kg and the median value was 7.8 mg/kg. The most recent EPA study of the

behavior of toxic pollutants in POTW indicates that total trivalent arsenic is 65 percent removed. Arsenic in sludge spread on cropland may be taken up by plants grown on that land. Edible plants can take up arsenic, but normally their growth is inhibited before the plants are ready for harvest.

<u>Beryllium</u> <u>(117)</u>. Beryllium is a dark gray metal of the alkaline earth family. It is relatively rare, but because of its unique properties finds widespread use as an alloying element, especially for hardening copper which is used in springs, electrical contacts, and non-sparking tools. World production is reported to be in the range of 250 tons annually. However, much more reaches the environment as emissions from coal burning operations. Analysis of coal indicates an average beryllium content of 3 ppm and 0.1 to 1.0 percent in coal ash or fly ash.

The principal ores are beryl ($3BeO - Al_2O_3.6SiO_2$) and bertrandite [$Be_4Si_2O_7(OH)_2$]. Only two industrial facilities produce beryllium in the U.S. because of limited demand and the highly toxic character. About two-thirds of the annual production goes

into alloys, 20 percent into heat sinks, and 10 percent into beryllium oxide (BeO) ceramic products.

Beryllium has a specific gravity of 1.846, making it the lightest metal with a high melting point (1,350° C). Beryllium alloys are corrosion resistant, but the metal corrodes in aqueous environments. Most common beryllium compounds are soluble in water, at least to the extent necessary to produce a toxic concentration of beryllium ions.

Most data on toxicity of beryllium is for inhalation of beryllium oxide dust. Some studies on orally administered beryllium in laboratory animals have been reported. Despite the large number of studies implicating beryllium as a carcinogen, there is no recorded instance of cancer being produced by ingestion. However, a recently convened panel of uninvolved experts concluded that epidemiologic evidence is suggestive that beryllium is a carcinogen in man.

In the aquatic environment beryllium is chronically toxic to aquatic organisms at 0.0053 mg/l. Water softness has a large effect on beryllium toxicity to fish. In soft water, beryllium is reportedly 100 times as toxic as in hard water.

For the maximum protection of human health from the potential carcinogenic effects of exposure to beryllium through ingestion of water and contaminated aquatic organisms the ambient water concentration is zero. Concentrations of beryllium estimated to result in additional lifetime cancer risk levels of 10^{-7}, 10^{-6}, and 10^{-5} are 6.8×10^{-7} mg/l, 6.8×10^{-6} mg/l and 6.8×10^{-5} mg/l. respectively. If contaminated aquatic organisms alone are consumed excluding the consumption of water, the concentration should be less than 0.00117 mg/l to keep the increased lifetime cancer risk below 10^{-5}.

Information on the behavior of beryllium in a POTW is scarce. Because beryllium hydroxide is insoluble in water, most beryllium entering a POTW will probably be in the form of suspended solids. As a result most of the beryllium will settle and be removed with sludge. However, beryllium has been shown to inhibit several enzyme systems, to interfere with DNA metabolism in liver, and to induce chromosomal and mitotic abnormalities. This interference in cellular processes may extend to interfere with biological treatment processes. The concentration and effects of beryllium in sludge which could be applied to cropland has not been studied.

Cadmium (118). Cadmium is a relatively rare metallic element that is seldom found in sufficient quantities in a pure state to warrant mining or extraction from the earth's surface. It is

found in trace amounts of about 1 ppm throughout the earth's crust. Cadmium is, however, a valuable by-product of zinc production.

Cadmium is used primarily as an electroplated metal, and is found as an impurity in the secondary refining of zinc, lead, and copper.

Cadmium is an extremely dangerous cumulative toxicant, causing progressive chronic poisoning in mammals, fish, and probably other organisms. The metal is not excreted.

Toxic effects of cadmium on man have been reported from throughout the world. Cadmium may be a factor in the development of such human pathological conditions as kidney disease, testicular tumors, hypertension, arteriosclerosis, growth inhibition, chronic disease of old age, and cancer. Cadmium is normally ingested by humans through food and water as well as by breathing air contaminated by cadmium dust. Cadmium is cumulative in the liver, kidney, pancreas, and thyroid of humans and other animals. A severe bone and kidney syndrome known as itai-itai disease has been documented in Japan as caused by cadmium ingestion via drinking water and contaminated irrigation water. Ingestion of as little as 0.6 mg/day has produced the disease. Cadmium acts synergistically with other metals. Copper and zinc substantially increase its toxicity.

Cadmium is concentrated by marine organisms, particularly molluscs, which accumulate cadmium in calcareous tissues and in the viscera. A concentration factor of 1,000 for cadmium in fish muscle has been reported, as have concentration factors of 3,000 in marine plants and up to 29,600 in certain marine animals. The eggs and larvae of fish are apparently more sensitive than adult fish to poisoning by cadmium, and crustaceans appear to be more sensitive than fish eggs and larvae.

For the protection of human health from the toxic properties of cadmium ingested through water and through contaminated aquatic organisms, the ambient water criterion is determined to be 0.010 mg/l. Available data show that adverse effects on aquatic life occur at concentrations in the same range as those cited for human health, and they are highly dependent on water hardness.

Cadmium is not destroyed when it is introduced into a POTW, and will either pass through to the POTW effluent or be incorporated into the POTW sludge. In addition, it can interfere with the POTW treatment process.

In a study of 189 POTW facilities, 75 percent of the primary plants, 57 percent of the trickling filter plants, 66 percent of

the activated sludge plants, and 62 percent of the biological plants allowed over 90 percent of the influent cadmium to pass through to the POTW effluent. Only two of the 189 POTW facilities allowed less than 20 percent pass-through, and none less than 10 percent pass-through. POTW effluent concentrations ranged from 0.001 to 1.97 mg/l (mean 0.028 mg/l, standard deviation 0.167 mg/l). The most recent EPA study of the behavior of toxic pollutants in POTW indicates that cadmium is 38 percent removed.

Cadmium not passed through the POTW will be retained in the sludge where it is likely to build up in concentration. Cadmium contamination of sewage sludge limits its use on land since it increases the level of cadmium in the soil. Data show that cadmium can be incorporated into crops, including vegetables and grains, from contaminated soils. Since the crops themselves show no adverse effects from soils with levels up to 100 mg/kg cadmium, these contaminated crops could have a significant impact on human health. Two Federal agencies have already recognized the potential adverse human health effects posed by the use of sludge on cropland. The FDA recommends that sludge containing over 30 mg/kg of cadmium should not be used on agricultural land. Sewage sludge contains 3 to 300 mg/kg (dry basis) of cadmium mean = 10 mg/kg; median = 16 mg/kg. The USDA also recommends placing limits on the total cadmium from sludge that may be applied to land.

<u>Chromium</u> <u>(119)</u>. Chromium is an elemental metal usually found as a chromite ($FeO \bullet Cr_2O_3$). The metal is normally produced by reducing the oxide with aluminum. reducing the oxide with aluminum. A significant proportion of the chromium used is in the form of compounds such as sodium dichromate (Na_2CrO_4), and chromic acid (CrO_3) - both are hexavalent chromium compounds.

Chromium is found as an alloying component of many steels and its compounds are used in electroplating baths, and as corrosion inhibitors for closed water circulation systems.

The two chromium forms most frequently found in industry wastewaters are hexavalent and trivalent chromium. Hexavalent chromium is the form used for metal treatments. Some of it is reduced to trivalent chromium as part of the process reaction. The raw wastewater containing both valence states is usually treated first to reduce remaining hexavalent to trivalent chromium, and second to precipitate the trivalent form as the hydroxide. The hexavalent form is not removed by lime treatment.

Chromium, in its various valence states, is hazardous to man. It can produce lung tumors when inhaled, and induces skin sensitizations. Large doses of chromates have corrosive effects on the

intestinal tract and can cause inflammation of the kidneys. Hexavalent chromium is a known human carcinogen. Levels of chromate ions that show no effect in man appear to be so low as to prohibit determination, to date.

The toxicity of chromium salts to fish and other aquatic life varies widely with the species, temperature, pH, valence of the chromium, and synergistic or antagonistic effects, especially the effect of water hardness. Studies have shown that trivalent chromium is more toxic to fish of some types than is hexavalent chromium. Hexavalent chromium retards growth of one fish species at 0.0002 mg/l. Fish food organisms and other lower forms of aquatic life are extremely sensitive to chromium. Therefore, both hexavalent and trivalent chromium must be considered harmful to particular fish or organisms.

For the protection of human health from the toxic properties of chromium (except hexavalent chromium) ingested through water and contaminated aquatic organisms, the ambient water quality criterion is 170 mg/l. If contaminated aquatic organisms alone are consumed, excluding the consumption of water, the ambient water criterion for trivalent chromium is 3,433 mg/l. The ambient water quality criterion for hexavalent chromium is recommended to be identical to the existing drinking water standard for total chromium which is 0.050 mg/l.

Chromium is not destroyed when treated by a POTW (although the oxidation state may change), and will either pass through to the POTW effluent or be incorporated into the POTW sludge. Both oxidation states can cause POTW treatment inhibition and can also limit the usefulness of municipal sludge.

Influent concentrations of chromium to POTW facilities have been observed by EPA to range from 0.005 to 14.0 mg/l, with a median concentration of 0.1 mg/l. The efficiencies for removal of chromium by the activated sludge process can vary greatly, depending on chromium concentration in the influent, and other operating conditions at the POTW. Chelation of chromium by organic matter and dissolution due to the presence of carbonates can cause deviations from the predicted behavior in treatment systems.

The systematic presence of chromium compounds will halt nitrification in a POTW for short periods, and most of the chromium will be retained in the sludge solids. Hexavalent chromium has been reported to severely affect the nitrification process, but trivalent chromium has little or no toxicity to activated sludge, except at high concentrations. The presence of iron, copper, and low pH will increase the toxicity of chromium in a POTW by releasing the chromium into solution to be ingested by microorganisms in the POTW.

The amount of chromium which passes through to the POTW effluent depends on the type of treatment processes used by the POTW. In a study of 240 POTW facilities, 56 percent of the primary plants allowed more than 80 percent pass-through to POTW effluent. More advanced treatment results in less pass-through. POTW effluent concentrations ranged from 0.003 to 3.2 mg/l total chromium (mean = 0.197, standard deviation = 0.48), and from 0.002 to 0.1 mg/l hexavalent chromium (mean = 0.017, standard deviation = 0.020). The most recent EPA study of the behavior of toxic pollutants in POTW indicates that hexavalent chromium is 18 percent removed.

Chromium not passed through the POTW will be retained in the sludge, where it is likely to build up in concentration. Sludge concentrations of total chromium of over 20,000 mg/kg (dry basis) have been observed. Disposal of sludges containing very high concentrations of trivalent chromium can potentially cause problems in uncontrolled landfills. Incineration, or similar destructive oxidation processes, can produce hexavalent chromium from lower valence states. Hexavalent chromium is potentially more toxic than trivalent chromium. In cases where high rates of chrome sludge application on land are used, distinct growth inhibition and plant tissue uptake have been noted.

Pretreatment of discharges substantially reduces the concentration of chromium in sludge. In Buffalo, New York, pretreatment of electroplating waste resulted in a decrease in chromium concentrations in POTW sludge from 2,510 to 1,040 mg/kg. A similar reduction occurred in Grand Rapids, Michigan, POTW facilities where the chromium concentration in sludge decreased from 11,000 to 2,700 mg/kg when pretreatment was made a requirement.

Copper (120). Copper is a metallic element that sometimes is found free, as the native metal, and is also found in minerals such as cuprite (Cu_2O), malechite [$CuCO_3.Cu(OH)_2$], azurite [$2CuCO_3.Cu(OH)_2$], chalcopyrite ($CuFeS_2$) and bornite (Cu_5FeS_4). Copper is obtained from these ores by smelting, leaching, and electrolysis. It is used in the plating, electrical, plumbing, and heating equipment industries, as well as in insecticides and fungicides.

Traces of copper are found in all forms of plant and animal life, and the metal is an essential trace element for nutrition. Copper is not considered to be a cumulative systemic poison for humans as it is readily excreted by the body, but it can cause symptoms of gastroenteritis, with nausea and intestinal irritations, as relatively low dosages. The limiting factor in domestic water supplies is taste. To prevent this adverse organoleptic effect of copper in water, a criterion of 1 mg/l has been established.

The toxicity of copper to aquatic organisms varies significantly, not only with the species, but also with the physical and chemical characteristics of the water, including temperature, hardness, turbidity, and carbon dioxide content. In hard water, the toxicity of copper salts may be reduced by the precipitation of copper carbonate or other insoluble compounds. The sulfates of copper and zinc, and of copper and calcium are synergistic in their toxic effect on fish.

Relatively high concentrations of copper may be tolerated by adult fish for short periods of time; the critical effect of copper appears to be its higher toxicity to young or juvenile fish. Concentrations of 0.02 to 0.03 mg/l have proved fatal to some common fish species. In general the salmonoids are very sensitive and the sunfishes are less sensitive to copper.

The recommended criterion to protect freshwater aquatic life is 0.0056 mg/l as a 24-hour average, and 0.012 mg/l maximum concentration at a hardness of 50 mg/l $CaCO_3$. For total recoverable copper the criterion to protect freshwater aquatic life is 0.0056 mg/l as a 24-hour average.

Copper salts cause undesirable color reactions in the food industry and cause pitting when deposited on some other metals such as aluminum and galvanized steel. To control undesirable taste and odor quality of ambient water due to the organoleptic properties of copper, the estimated level is 1.0 mg/l for total recoverable copper.

Irrigation water containing more than minute quantities of copper can be detrimental to certain crops. Copper appears in all soils, and its concentration ranges from 10 to 80 ppm. In soils, copper occurs in association with hydrous oxides of manganese and iron, and also as soluble and insoluble complexes with organic matter. Copper is essential to the life of plants, and the normal range of concentration in plant tissue is from 5 to 20 ppm. Copper concentrations in plants normally do not build up to high levels when toxicity occurs. For example, the concentrations of copper in snapbean leaves and pods was less than 50 and 20 mg/kg, respectively, under conditions of severe copper toxicity. Even under conditions of copper toxicity, most of the excess copper accumulates in the roots; very little is moved to the aerial part of the plant.

Copper is not destroyed when treated by a POTW, and will either pass through to the POTW effluent or be retained in the POTW sludge. It can interfere with the POTW treatment processes and can limit the usefulness of municipal sludge.

The influent concentration of copper to a POTW has been observed by the EPA to range from 0.01 to 1.97 mg/l, with a median concentration of 0.12 mg/l. The copper that is removed from the influent stream of a POTW is absorbed on the sludge or appears in the sludge as the hydroxide of the metal. Bench scale pilot studies have shown that from about 25 percent to 75 percent of the copper passing through the activated sludge process remains in solution in the final effluent. Four-hour slug dosages of copper sulfate in concentrations exceeding 50 mg/l were reported to have severe effects on the removal efficiency of an unacclimated system, with the system returning to normal in about 100 hours. Slug dosages of copper in the form of copper cyanide were observed to have much more severe effects on the activated sludge system, but the total system returned to normal in 24 hours.

In a recent study of 268 POTW facilities, the median pass-through was over 80 percent for primary plants and 40 to 50 percent for trickling filter, activated sludge, and biological treatment plants. POTW effluent concentrations of copper ranged from 0.003 to 1.8 mg/l (mean 0.126, standard deviation 0.242). The most recent EPA study of the behavior of toxic pollutants in POTW indicates that copper is 58 percent removed.

Copper which does not pass through the POTW will be retained in the sludge where it will build up in concentration. The presence of excessive levels of copper in sludge may limit its use on cropland. Sewage sludge contains up to 16,000 mg/kg of copper, with 730 mg/kg as the mean value. These concentrations are significantly greater than those normally found in soil, which usually range from 18 to 80 mg/kg. Experimental data indicate that when dried sludge is spread over tillable land, the copper tends to remain in place down to the depth of the tillage, except for copper which is taken up by plants grown in the soil. Recent investigation has shown that the extractable copper content of sludge-treated soil decreased with time, which suggests a reversion of copper to less soluble forms was occurring.

Cyanide (121). Cyanides are among the most toxic of pollutants commonly observed in industrial wastewaters. Introduction of cyanide into industrial processes is usually by dissolution of potassium cyanide (KCN) or sodium cyanide (NaCN) in process waters. However, hydrogen cyanide (HCN) formed when the above salts are dissolved in water, is probably the most acutely lethal compound.

The relationship of pH to hydrogen cyanide formation is very important. As pH is lowered to below 7, more than 99 percent of the cyanide is present as HCN and less than 1 percent as cyanide ions. Thus, at neutral pH, that of most living organisms, the more toxic form of cyanide prevails.

Cyanide ions combine with numerous heavy metal ions to form complexes. The complexes are in equilibrium with HCN. Thus, the stability of the metal-cyanide complex and the pH determine the concentration of HCN. Stability of the metal-cyanide anion complexes is extremely variable. Those formed with zinc, copper, and cadmium are not stable - they rapidly dissociate, with production of HCN, in near neutral or acid waters. Some of the complexes are extremely stable. Cobaltocyanide is very resistant to acid distillation in the laboratory. Iron cyanide complexes are also stable, but undergo photodecomposition to give HCN upon exposure to sunlight. Synergistic effects have been demonstrated for the metal cyanide complexes making zinc, copper, and cadmium cyanides more toxic than an equal concentration of sodium cyanide.

The toxic mechanism of cyanide is essentially an inhibition of oxygen metabolism, i.e., rendering the tissues incapable of exchanging oxygen. The cyanogen compounds are true noncumulative protoplasmic poisons. They arrest the activity of all forms of animal life. Cyanide shows a very specific type of toxic action. It inhibits the cytochrome oxidase system. This system is the one which facilitates electron transfer from reduced metabolites to molecular oxygen. The human body can convert cyanide to a non-toxic thiocyanate and eliminate it. However, if the quantity of cyanide ingested is too great at one time, the inhibition of oxygen utilization proves fatal before the detoxifying reaction reduces the cyanide concentration to a safe level.

Cyanides are more toxic to fish than to lower forms of aquatic organisms such as midge larvae, crustaceans, and mussels. Toxicity to fish is a function of chemical form and concentration, and is influenced by the rate of metabolism (temperature), the level of dissolved oxygen, and pH. In laboratory studies free cyanide concentrations ranging from 0.05 to 0.14 mg/l have been proven to be fatal to sensitive fish species including trout, bluegill, and fathead minnows. Levels above 0.2 mg/l are rapidly fatal to most fish species. Long term sublethal concentrations of cyanide as low as 0.01 mg/l have been shown to affect the ability of fish to function normally, e.g., reproduce, grow, and swim.

For the protection of human health from the toxic properties of cyanide ingested through water and through contaminated aquatic organisms, the ambient water quality criterion is determined to be 0.200 mg/l.

Persistence of cyanide in water is highly variable and depends upon the chemical form of cyanide in the water, the concentration of cyanide, and the nature of other constituents. Cyanide may be destroyed by strong oxidizing agents such as permanganate and chlorine. Chlorine is commonly used to oxidize strong cyanide

solutions. Carbon dioxide and nitrogen are the products of complete oxidation. But if the reaction is not complete, the very toxic compound, cyanogen chloride, may remain in the treatment system and subsequently be released to the environment. Partial chlorination may occur as part of a POTW treatment, or during the disinfection treatment of surface water for drinking water preparation.

Cyanides can interfere with treatment processes in a POTW, or pass through to ambient waters. At low concentrations and with acclimated microflora, cyanide may be decomposed by microorganisms in anaerobic and aerobic environments or waste treatment systems. However, data indicate that much of the cyanide introduced passes through to the POTW effluent. The mean pass-through of 14 biological plants was 71 percent. In a recent study of 41 POTW facilities the effluent concentrations ranged from 0.002 to 100 mg/l (mean = 2.518, standard deviation = 15.6). Cyanide also enhances the toxicity of metals commonly found in POTW effluents, including the toxic pollutants cadmium, zinc, and copper. The most recent EPA study of the behavior of toxic pollutants in POTW indicates that free cyanide is 52 percent removed.

Data for Grand Rapids, Michigan, showed a significant decline in cyanide concentrations downstream from the POTW after pretreatment regulations were put in force. Concentrations fell from 0.66 mg/l before, to 0.01 mg/l after pretreatment was required.

Lead (122). Lead is a soft, malleable, ductile, blueish-gray, metallic element, usually obtained from the mineral galena (lead sulfide, PbS), arglesite (lead sulfate, $PbSO_4$), or cerussile (lead carbonate, $PbCO_3$). Because it is usually associated with minerals of zinc, silver, copper, gold, cadmium, antimony, and arsenic, special purification methods are frequently used before and after extraction of the metal from the ore concentrate by smelting.

Lead is widely used for its corrosion resistance, sound and vibration absorption, low melting point (solders), and has relatively high imperviousness to various forms of radiation. Small amounts of copper, antimony and other metals can be alloyed with lead to achieve greater hardness, stiffness, or corrosion resistance than is afforded by the pure metal. Lead compounds are used in glazes and paints. About one third of U.S. lead consumption goes into storage batteries. About half of U.S. lead consumption is from secondary lead recovery. U.S. consumption of lead is in the range of one million tons annually.

Lead ingested by humans produces a variety of toxic effects including impaired reproductive ability, disturbances in blood chemistry, neurological disorders, kidney damage, and adverse

cardiovascular effects. Exposure to lead in the diet results in permanent increase in lead levels in the body. Most of the lead entering the body eventually becomes localized in the bones where it accumulates. Lead is a carcinogen or cocarcinogen in some species of experimental animals. Lead is teratogenic in experimental animals. Mutagenicity data are not available for lead.

The ambient water quality criterion for lead is recommended to be identical to the existing drinking water standard which is 0.050 mg/l. Available data show that adverse effects on aquatic life occur at concnetrations as low as 7.5×10^{-4} mg/l of total recoverable lead as a 24-hour average with a water hardness of 50 mg/l as $CaCO_3$.

Lead is not destroyed in a POTW, but is passed through to the effluent or retained in the POTW sludge; it can interfere with POTW treatment processes and can limit the usefulness of POTW sludge for application to agricultural croplands. Threshold concentration for inhibition of the activated sludge process is 0.1 mg/l, and for the nitrification process is 0.5 mg/l. In a study of 214 POTW facilities, median pass through values were over 80 percent for primary plants and over 60 percent for trickling filter, activated sludge, and biological process plants. Lead concentration in POTW effluents ranged from 0.003 to 1.8 mg/l (mean = 0.106 mg/l, standard deviation = 0.222). The most recent EPA study of the behavior of toxic pollutants in a POTW indicates that lead is 48 percent removed.

Application of lead-containing sludge to cropland should not lead to uptake by crops under most conditions because normally lead is strongly bound by soil. However, under the unusual condition of low pH (less than 5.5) and low concentrations of labile phosphorus, lead solubility is increased and plants can accumulate lead.

Mercury (123). Mercury is an elemental metal rarely found in nature as the free metal. Mercury is unique among metals as it remains a liquid down to about 39 degrees below zero. It is relatively inert chemically and is insoluble in water. The principal ore is cinnabar (HgS).

Mercury is used industrially as the metal and as mercurous and mercuric salts and compounds. Mercury is used in several types of batteries. Mercury released to the aqueous environment is subject to biomethylation - conversion to the extremely toxic methyl mercury.

Mercury can be introduced into the body through the skin and the respiratory system as the elemental vapor. Mercuric salts are highly toxic to humans and can be absorbed through the gastro-

intestinal tract. Fatal doses can vary from 1 to 30 grams. Chronic toxicity of methyl mercury is evidenced primarily by neurological symptoms. Some mercuric salts cause death by kidney failure.

Mercuric salts are extremely toxic to fish and other aquatic life. Mercuric chloride is more lethal than copper, hexavalent chromium, zinc, nickel, and lead towards fish and aquatic life. In the food cycle, algae containing mercury up to 100 times the concentration in the surrounding sea water are eaten by fish which further concentrate the mercury. Predators that eat the fish in turn concentrate the mercury even further.

For the protection of human health from the toxic properties of mercury ingested through water and through contaminated aquatic organisms the ambient water criterion is determined to be 0.000144 mg/l.

Mercury is not destroyed when treated by a POTW, and will either pass through to the POTW effluent or be incorporated into the POTW sludge. At low concentrations it may reduce POTW removal efficiencies, and at high concentrations it may upset the POTW operation.

The influent concentrations of mercury to a POTW have been observed by the EPA to range from 0.002 to 0.24 mg/l, with a median concentration of 0.001 mg/l. Mercury has been reported in the literature to have inhibiting effects upon an activated sludge POTW at levels as low as 0.1 mg/l. At 5 mg/l of mercury, losses of COD removal efficiency of 14 to 40 percent have been reported, while at 10 mg/l loss of removal of 59 percent has been reported. Upset of an activated sludge POTW is reported in the literature to occur near 200 mg/l. The anaerobic digestion process is much less affected by the presence of mercury, with inhibitory effects being reported at 1,365 mg/l.

In a study of 22 POTW facilities having secondary treatment, the range of removal of mercury from the influent to the POTW ranged from 4 to 99 percent with median removal of 41 percent. The most recent EPA study of the behavior of toxic pollutants in POTW indicates that mercury is 69 percent removed. Thus significant pass through of mercury may occur.

In sludges, mercury content may be high if industrial sources of mercury contamination are present. Little is known about the form in which mercury occurs in sludge. Mercury may undergo biological methylation in sediments, but no methylation has been observed in soils, mud, or sewage sludge.

The mercury content of soils not receiving additions of POTW sewage sludge lie in the range from 0.01 to 0.5 mg/kg. In soils receiving POTW sludges for protracted periods, the concentration of mercury has been observed to approach 1.0 mg/kg. In the soil, mercury enters into reactions with the exchange complex of clay and organic fractions, forming both ionic and covalent bonds. Chemical and microbiological degradation of mercurials can take place side by side in the soil, and the products - ionic or molecular - are retained by organic matter and clay or may be volatilized if gaseous. Because of the high affinity between mercury and the solid soil surfaces, mercury persists in the upper layer of the soil.

Mercury can enter plants through the roots, it can readily move to other parts of the plant, and it has been reported to cause injury to plants. In many plants mercury concentrations range from 0.01 to 0.20 mg/kg, but when plants are supplied with high levels of mercury, these concentrations can exceed 0.5 mg/kg. Bioconcentration occurs in animals ingesting mercury in food.

Nickel (124). Nickel is seldom found in nature as the pure elemental metal. It is a relatively plentiful element and is widely distributed throughout the earth's crust. It occurs in marine organisms and is found in the oceans. The chief commercial ores for nickel are pentlandite [$(Fe,Ni)_9S_8$], and a lateritic ore consisting of hydrated nickel-iron-magnesium silicate.

Nickel has many and varied uses. It is used in alloys and as the pure metal. Nickel salts are used for electroplating baths.

The toxicity of nickel to man is thought to be very low, and systemic poisoning of human beings by nickel or nickel salts is almost unknown. In non-human mammals nickel acts to inhibit insulin release, depress growth, and reduce cholesterol. A high incidence of cancer of the lung and nose has been reported in humans engaged in the refining of nickel.

Nickel salts can kill fish at very low concentrations. However, nickel has been found to be less toxic to some fish than copper, zinc, and iron. Nickel is present in coastal and open ocean water at concentrations in the range of 0.0001 to 0.006 mg/l although the most common values are 0.002 to 0.003 mg/l. Marine animals contain up to 0.4 mg/l and marine plants contain up to 3 mg/l. Higher nickel concentrations have been reported to cause reduction in photosynthetic activity of the giant kelp. A low concentration was found to kill oyster eggs.

For the protection of human health based on the toxic properties of nickel ingested through water and through contaminated aquatic

organisms, the ambient water criterion is determined to be 0.0134 mg/l. If contaminated aquatic organisms are consumed, excluding consumption of water, the ambient water criterion is determined to be 0.100 mg/l. Available data show that adverse effects on aquatic life occur for total recoverable nickel concentrations as low as 0.0071 mg/l as a 24-hour average.

Nickel is not destroyed when treated in a POTW, but will either pass through to the POTW effluent or be retained in the POTW sludge. It can interfere with POTW treatment processes and can also limit the usefulness of municipal sludge.

Nickel salts have caused inhibition of the biochemical oxidation of sewage in a POTW. In a pilot plant, slug doses of nickel significantly reduced normal treatment efficiencies for a few hours, but the plant acclimated itself somewhat to the slug dosage and appeared to achieve normal treatment efficiencies within 40 hours. It has been reported that the anaerobic digestion process is inhibited only by high concentrations of nickel, while a low concentration of nickel inhibits the nitrification process.

The influent concentration of nickel to a POTW has been observed by the EPA to range from 0.01 to 3.19 mg/l, with a median of 0.33 mg/l. In a study of 190 POTW facilities, nickel pass-through was greater than 90 percent for 82 percent of the primary plants. Median pass-through for trickling filter, activated sludge, and biological process plants was greater than 80 percent. POTW effluent concentrations ranged from 0.002 to 40 mg/l (mean = 0.410, standard deviation = 3.279). The most recent EPA study of the behavior of toxic pollutants in POTW indicates that nickel is 19 percent removed.

Nickel not passed through the POTW will be incorporated into the sludge. In a recent two-year study of eight cities, four of the cities had median nickel concentrations of over 350 mg/kg in their sludge, and two were over 1,000 mg/kg. The maximum nickel concentration observed was 4,010 mg/kg.

Nickel is found in nearly all soils, plants, and waters. Nickel has no known essential function in plants. In soils, nickel typically is found in the range from 10 to 100 mg/kg. Various environmental exposures to nickel appear to correlate with increased incidence of tumors in man. For example, cancer in the maxillary antrum of snuff users may result from using plant materials grown on soil high in nickel.

Nickel toxicity may develop in plants from application of sewage sludge on acid soils. Nickel has caused reduction of yields for a variety of crops including oats, mustard, turnips, and cabbage.

In one study nickel decreased the yields of oats significantly at 100 mg/kg.

Whether nickel exerts a toxic effect on plants depends on several soil factors, the amount of nickel applied, and the contents of other metals in the sludge. Unlike copper and zinc, which are more available from inorganic sources than from sludge, nickel uptake by plants seems to be promoted by the presence of the organic matter in sludge. Soil treatments, such as liming, reduce the solubility of nickel. Toxicity of nickel to plants is enhanced in acidic soils.

Selenium (125). Selenium (chemical symbol Se) is a non-metallic element existing in several allotropic forms. Gray selenium, which has a metallic appearance, is the stable form at ordinary temperatures and melts at 220°C. Selenium is a major component of 38 minerals and a minor component of 37 others found in various parts of the world. Most selenium is obtained as a by-product of precious metals recovery from electrolytic copper refinery slimes. U.S. annual production at one time reached one million pounds.

Principal uses of selenium are in semi-conductors, pigments, decoloring of glass, zerography, and metallurgy. It also is used to produce ruby glass used in signal lights. Several selenium compounds are important oxidizing agents in the synthesis of organic chemicals and drug products.

While results of some studies suggest that selenium may be an essential element in human nutrition, the toxic effects of selenium in humans are well established. Lassitude, loss of hair, discoloration and loss of fingernails are symptoms of selenium poisoning. In a fatal case of ingestion of a larger dose of selenium acid, peripheral vascular collapse, pulmonary edema, and coma occurred. Selenium produces mutagenic and teratogenic effects, but it has not been established as exhibiting carcinogenic activity.

For the protection of human health from the toxic properties of selenium ingested through water and through contaminated aquatic organisms, the ambient water criterion is determined to be 0.010 mg/l, i.e., the same as the drinking water standard. Available data show that adverse effects on aquatic life occur at concentrations higher than that cited for human toxicity.

Very few data are available regarding the behavior of selenium in a POTW. One EPA survey of 103 POTW facilities revealed one POTW using biological treatment and having selenium in the influent. Influent concentration was 0.0025 mg/l, effluent concentration was 0.0016 mg/l, giving a removal of 37 percent. The most recent

EPA study of the behavior of toxic pollutants in POTW indicates that selenium is 46 percent removed. It is not known to be inhibitory to POTW processes. In another study, sludge from POTW facilities in 16 cities was found to contain from 1.8 to 8.7 mg/kg selenium, compared to 0.01 to 2 mg/kg in untreated soil. These concentrations of selenium in sludge present a potential hazard for humans or other mammals eating crops grown on soil treated with selenium-containing sludge.

Silver (126). Silver is a soft, lustrous, white metal that is insoluble in water and alkali. In nature, silver is found in the elemental state (native silver) and combined in ores such as argentite (Ag_2S), horn silver (AgCl), proustite (Ag_3AsS_3), and pyargyrite (Ag_3SbS_3). Silver is used extensively in several industries, among them electroplating.

Metallic silver is not considered to be toxic, but most of its salts are toxic to a large number of organisms. Upon ingestion by humans, many silver salts are absorbed in the circulatory system and deposited in various body tissues, resulting in generalized or sometimes localized gray pigmentation of the skin and mucous membranes known as argyria. There is no known method for removing silver from the tissues once it is deposited, and the effect is cumulative.

Silver is recognized as a bactericide and doses from 0.000001 to 0.0005 mg/l have been reported as sufficient to sterilize water. The criterion for ambient water to protect human health from the toxic properties of silver ingested through water and through contaminated aquatic organisms is 0.050 mg/l.

The chronic toxic effects of silver on the aquatic environment have not been given as much attention as many other heavy metals. Data from existing literature support the fact that silver is very toxic to aquatic organisms. Despite the fact that silver is nearly the most toxic of the heavy metals, there are insufficient data to adequately evaluate even the effects of hardness on silver toxicity. There are no data available on the toxicity of different forms of silver.

Bioaccumulation and concentration of silver from sewage sludge has not been studied to any great degree. There is some indication that silver could be bioaccumulated in mushrooms to the extent that there could be adverse physiological effects on humans if they consumed large quantities of mushrooms grown in silver enriched soil. The effect, however, would tend to be unpleasant rather than fatal.

The most recent EPA study of the behavior of toxic pollutants in a POTW indicates that silver is 66 percent removed. There is

little summary data available on the quantity of silver discharged to a POTW. Presumably there would be a tendency to limit its discharge from a manufacturing facility because of its high intrinsic value.

Zinc (128). Zinc occurs abundantly in the earth's crust, concentrated in ores. It is readily refined into the pure, stable, silver-white metal. In addition to its use in alloys, zinc is used as a protective coating on steel. It is applied by hot diping (i.e., dipping the steel in molten zinc) or by electroplating.

Zinc can have an adverse effect on man and animals at high concentrations. Zinc at concentrations in excess of 5 mg/l causes an undesirable taste which persists through conventional treatment. For the prevention of adverse effects due to these organoleptic properties of zinc, 5 mg/l was adopted for the ambient water criterion. Available data show that adverse effects on aquatic life occur at concentrations as low as 0.047 mg/l as a 24-hour average.

Toxic concentrations of zinc compounds cause adverse changes in the morphology and physiology of fish. Lethal concentrations in the range of 0.1 mg/l have been reported. Acutely toxic concentrations induce cellular breakdown of the gills, and possibly the clogging of the gills with mucous. Chronically toxic concentrations of zinc compounds cause general enfeeblement and widespread histological changes to many organs, but not to gills. Abnormal swimming behavior has been reported at 0.04 mg/l. Growth and maturation are retarded by zinc. It has been observed that the effects of zinc poisoning may not become apparent immediately, so that fish removed from zinc-contaminated water may die as long as 48 hours after removal.

In general, salmonoids are most sensitive to elemental zinc in soft water; the rainbow trout is the most sensitive in hard waters. A complex relationship exists between zinc concentration, dissolved zinc concentration, pH, temperature, and calcium and magnesium concentration. Prediction of harmful effects has been less than reliable and controlled studies have not been extensively documented.

The major concern with zinc compounds in marine waters is not with acute lethal effects, but rather with the long-term sublethal effects of the metallic compounds and complexes. Zinc accumulates in some marine species, and marine animals contain zinc in the range of 6 to 1,500 mg/kg. From the point of view of acute lethal effects, invertebrate marine animals seem to be the most sensitive organism tested.

Toxicities of zinc in nutrient solutions have been demonstrated for a number of plants. A variety of fresh water plants tested manifested harmful symptoms at concentrations of 0.030 to 21.6 mg/l. Zinc sulfate has also been found to be lethal to many plants and it could impair agricultural uses of the water.

Zinc is not destroyed when treated by a POTW, but will either pass through to the POTW effluent or be retained in the POTW sludge. It can interfere with treatment processes in the POTW and can also limit the usefulness of municipal sludge.

In slug doses, and particularly in the presence of copper, dissolved zinc can interfere with or seriously disrupt the operation of POTW biological processes by reducing overall removal efficiencies, largely as a result of the toxicity of the metal to biological organisms. However, zinc solids in the form of hydroxides or sulfides do not appear to interfere with biological treatment processes, on the basis of available data. Such solids accumulate in the sludge.

The influent concentrations of zinc to a POTW have been observed by the EPA to range from 0.017 to 3.91 mg/l, with a median concentration of 0.33 mg/l. Primary treatment is not efficient in removing zinc; however, the microbial floc of secondary treatment readily adsorbs zinc.

In a study of 258 POTW facilities, the median pass-through values were 70 to 88 percent for primary plants, 50 to 60 percent for trickling filter and biological process plants, and 30 to 40 percent for activated process plants. POTW effluent concentrations of zinc ranged from 0.003 to 3.6 mg/l (mean = 0.330, standard deviation = 0.464). The most recent EPA study of the behavior of toxic pollutants in POTW indicates that zinc is 65 percent removed.

The zinc which does not pass through the POTW is retained in the sludge. The presence of zinc in sludge may limit its use on cropland. Sewage sludge contains 72 to over 30,000 mg/kg of zinc, with 3,366 mg/kg as the mean value. These concentrations are significantly greater than those normally found in soil, which range from 0 to 195 mg/kg, with 94 mg/kg being a common level. Therefore, application of sewage sludge to soil will generally increase the concentration of zinc in the soil. Zinc can be toxic to plants, depending upon soil pH. Lettuce, tomatoes, turnips, mustard, kale, and beets are especially sensitive to zinc contamination.

Aluminum. Aluminum, a nonconventional pollutant, is an abundant silvery white metal comprising approximately 8.1 percent of the earth's crust. Aluminum never exists in an ionic state in

nature, but rather is found as a component of several ores. The principal ore for aluminum is bauxite from which alumina (Al_2O_3) is extracted. Aluminum metal is produced by electrolysis of the alumina in the cryolite bath.

Aluminum metal is relatively corrosion resistant because it forms a protective oxide film on the surface which prevents corrosion under many conditions. Electrolytic action of other metals in contact with aluminum and strong acids and alkalis can break down the oxide layer causing rapid corrosion to occur.

Aluminum is light, malleable, ductile, possesses high thermal and electrical conductivity, and is non-magnetic. It can be formed, machined or cast. Aluminum is used in the construction, transportation, and container industries and competes with iron and steel in these markets.

There is increasing evidence that dissolved aluminum may have substantial adverse effects on human health. Aluminum has been implicated by several studies in the development of Alzheimer's disease (progressive senile dementia). This disease is associated with the formation of tangled bunches of nerve fibers or "neurofibrillary tangles" (NFT). Autopsy studies have shown that aluminum is present in 90 percent of the nuclei of NFT neurons. It is present in less than 6 percent of the nuclei of normal neurons. This trend is also apparent in the cytoplasm of NFT neurons, although less prominent than in the nuclei: aluminum was found in 29.4 percent of the cytoplasms of NFT neurons and 11.1 percent of the cytoplasms of normal neurons.

Brains of individuals suffering from several other neurological diseases have also displayed elevated concentrations of aluminum. These diseases include Huntington's disease, Parkinsons' disease, progressive supranuclear palsy, acoustic neuroma, and Guamanian amyotrophic lateral sclerosis (ALS).

These increased concentrations of aluminum may be a result of the development of the disease, rather than a contributing cause; however, this possibility seems less likely in light of several recent studies correlating high concentrations of aluminum in the environment to a high incidence of several of these neurological disorders. These and other studies are discussed in greater detail in the report "Aluminum: An Environmental and Health Effects Assessment," cited as a reference in this document. Although much work remains to be done on this subject, the Agency believes that the evidence points to a much broader neurotoxic role for aluminum than had previously been assumed.

In addition, mildly alkaline conditions can cause precipitation of aluminum as the hydroxide. When aluminum hydroxide precipi-

tates in waterways or bodies of water, it can blanket the bottom, having an adverse effect on the benthos and on aquatic plant life rooted on the bottom. Aluminum hydroxide, like many precipitates, can also impair the gill action of fish when present in large amounts.

Alum, an aluminum salt with the chemical formula $Al_2(SO_4)_3.14H_2O$, is used as a coagulant in municipal and industrial wastewater treatment. This form is different from dissolved aluminum and aluminum hydroxide, which are both harmful pollutants. The amount of dissolved aluminum in finished water does not generally depend upon the amount of alum used as a coagulant, unless a large excess is used. The alum is contained in the treatment sludge; very little passes through into the effluent.

Similarly, the amount of aluminum hydroxide in finished water does not depend on the amount of alum used in coagulation, but rather on the pH and the concentration of dissolved aluminum. Therefore, the use of alum as a coagulant does not result in large amounts of either aluminum or aluminum hydroxide in finished water. There are no data available on the POTW removal efficiency for the pollutant aluminum.

Oil and Grease. Oil and grease are taken together as one pollutant parameter. This is a conventional pollutant and some of its components are:

1. Light Hydrocarbons - These include light fuels such as gasoline, kerosene, and jet fuel, and miscellaneous solvents used for industrial processing, degreasing, or cleaning purposes. The presence of these light hydrocarbons may make the removal of other heavier oil wastes more difficult.

2. Heavy Hydrocarbons, Fuels, and Tars - These include the crude oils, diesel oils, #6 fuel oil, residual oils, slop oils, and in some cases, asphalt and road tar.

3. Lubricants and Cutting Fluids - These generally fall into two classes: non-emulsifiable oils such as lubricating oils and greases and emulsifiable oils such as water soluble oils, rolling oils, cutting oils, and drawing compounds. Emulsifiable oils may contain fat, soap, or various other additives.

4. Vegetable and Animal Fats and Oils - These originate primarily from processing of foods and natural products.

These compounds can settle or float and may exist as solids or liquids depending upon factors such as method of use, production process, and temperature of water.

Oil and grease even in small quantities cause troublesome taste and odor problems. Scum lines from these agents are produced on water treatment basin walls and other containers. Fish and water fowl are adversely affected by oils in their habitat. Oil emulsions may adhere to the gills of fish causing suffocation, and the flesh of fish is tainted when microorganisms that were exposed to waste oil are eaten. Deposition of oil in the bottom sediments of water can serve to inhibit normal benthic growth. Oil and grease exhibit an oxygen demand.

Many of the toxic organic pollutants will be found distributed between the oil phase and the aqueous phase in industrial wastewaters. The presence of phenols, PCB's, PAH's, and almost any other organic pollutant in the oil and grease make characterization of this parameter almost impossible. However, all of these other organics add to the objectionable nature of the oil and grease.

Levels of oil and grease which are toxic to aquatic organisms vary greatly, depending on the type and the species susceptibility. However, it has been reported that crude oil in concentrations as low as 0.3 mg/l is extremely toxic to freshwater fish. It has been recommended that public water supply sources be essentially free from oil and grease.

Oil and grease in quantities of 100 l/sq km show up as a sheen on the surface of a body of water. The presence of oil slicks decreases the aesthetic value of a waterway.

Oil and grease is compatible with a POTW activated sludge process in limited quantity. However, slug loadings or high concentrations of oil and grease interfere with biological treatment processes. The oils coat surfaces and solid particles, preventing access of oxygen, and sealing in some microorganisms. Land spreading of POTW sludge containing oil and grease uncontaminated by toxic pollutants is not expected to affect crops grown on the treated land, or animals eating those crops.

pH. Although not a specific pollutant, pH is related to the acidity or alkalinity of a wastewater stream. It is not, however, a measure of either. The term pH is used to describe the hydrogen ion concentration (or activity) present in a given solution. Values for pH range from 0 to 14, and these numbers are the negative logarithms of the hydrogen ion concentrations. A pH of 7 indicates neutrality. Solutions with a pH above 7 are alkaline, while those solutions with a pH below 7 are acidic. The relationship of pH and acidity and alkalinity is not necessarily linear or direct. Knowledge of the water pH is useful in determining necessary measures for corrosion control, sanitation, and disinfection. Its value is also necessary in the treatment of

industrial wastewaters to determine amounts of chemicals required to remove pollutants and to measure their effectiveness. Removal of pollutants, especially dissolved solids is affected by the pH of the wastewater.

Waters with a pH below 6.0 are corrosive to water works structures, distribution lines, and household plumbing fixtures and can thus add constituents to drinking water such as iron, copper, zinc, cadmium, and lead. The hydrogen ion concentration can affect the taste of the water, and at a low pH water tastes sour. The bactericidal effect of chlorine is weakened as the pH increases, and it is advantageous to keep the pH close to 7.0. This is significant for providing safe drinking water.

Extremes of pH or rapid pH changes can exert stress conditions or kill aquatic life outright. Even moderate changes from acceptable criteria limits of pH are deleterious to some species.

The relative toxicity to aquatic life of many materials is increased by changes in the water pH. For example, metallocyanide complexes can increase a thousand-fold in toxicity with a drop of 1.5 pH units.

Because of the universal nature of pH and its effect on water quality and treatment, it is selected as a pollutant parameter for many industry categories. A neutral pH range (approximately 6 to 9) is generally desired because either extreme beyond this range has a deleterious effect on receiving waters or the pollutant nature of other wastewater constituents.

Pretreatment for regulation of pH is covered by the "General Pretreatment Regulations for Existing and New Sources of Pollution," 40 CFR 403.5. This section prohibits the discharge to a POTW of "pollutants which will cause corrosive structural damage to the POTW but in no case discharges with pH lower than 5.0 unless the works is specially designed to accommodate such discharges."

<u>Total Suspended Solids (TSS)</u>. Suspended solids include both organic and inorganic materials. The inorganic compounds include sand, silt, and clay. The organic fraction includes such materials as grease, oil, tar, and animal and vegetable waste products. These solids may settle out rapidly, and bottom deposits are often a mixture of both organic and inorganic solids. Solids may be suspended in water for a time and then settle to the bed of the stream or lake. These solids discharged with man's wastes may be inert, slowly biodegradable materials, or rapidly decomposable substances. While in suspension, suspended solids increase the turbidity of the water, reduce light penetration, and impair the photosynthetic activity of aquatic plants.

Suspended solids in water interfere with many industrial processes and cause foaming in boilers and incrustations on equipment exposed to such water, especially as the temperature rises. They are undesirable in process water used in the manufacture of steel, in the textile industry, in laundries, in dyeing, and in cooling systems.

Solids in suspension are aesthetically displeasing. When they settle to form sludge deposits on the stream or lake bed, they are often damaging to the life in the water. Solids, when transformed to sludge deposit, may do a variety of damaging things, including blanketing the stream or lake bed and thereby destroying the living spaces for those benthic organisms that would otherwise occupy the habitat. When of an organic nature, solids use a portion or all of the dissolved oxygen available in the area. Organic materials also serve as a food source for sludgeworms and associated organisms.

Disregarding any toxic effect attributable to substances leached out by water, suspended solids may kill fish and shellfish by causing abrasive injuries and by clogging the gills and respiratory passages of various aquatic fauna. Indirectly, suspended solids are inimical to aquatic life because they screen out light, and they promote and maintain the development of noxious conditions through oxygen depletion. This results in the killing of fish and fish food organisms. Suspended solids also reduce the recreational value of the water.

Total suspended solids is a traditional pollutant which is compatible with a well-run POTW. This pollutant with the exception of those components which are described elsewhere in this section, e.g., heavy metal components, does not interfere with the operation of a POTW. However, since a considerable portion of the innocuous TSS may be inseparably bound to the constituents which do interfere with POTW operation, or produce unusable sludge, or subsequently dissolve to produce unacceptable POTW effluent, TSS may be considered a toxic waste.

POLLUTANT SELECTION FOR CORE WASTE STREAMS

The pollutant selection procedure was performed for the following core groups of waste streams to select those toxic pollutants that would be considered for establishing regulations for these core wastewater stream groups:

Rolling with Neat Oils Core Waste Streams
Rolling with Emulsions Core Waste Streams
Extrusion Core Waste Streams
Forging Core Waste Streams
Drawing with Neat Oils Core Waste Streams

Drawing with Emulsions or Soaps Core Waste Streams

Table VI-2 summarizes the disposition of priority pollutants with respect to each set of core operations.

Rolling with Neat Oils Core Waste Streams

The following waste streams will receive a pollutant discharge allocation in the core of the Rolling with Neat Oils Subcategory:

Roll Grinding Spent Emulsion
Annealing Furnace Atmosphere Scrubber Liquor
Sawing Spent Lubricant
Miscellaneous Nondescript Wastewater Sources

Organic pollutant characteristics of the roll grinding spent emulsions and sawing spent lubricant waste streams were determined from the rolling spent emulsions waste stream. All of these processes require a lubricant to prevent excess wear on the metal against metal surfaces. Since the properties of the lubricants required are similar between these three processes, the formulations for each ought to be similar; therefore, the characteristics of one are transferable to another.

Toxic metal pollutants and cyanide characteristics from applicable miscellaneous wastewater sources (points AA-2, AA-3, AA-8, and AA-9) were considered for the miscellaneous nondescript wastewater sources. Toxic metals and cyanide characteristics of sawing spent lubricant and roll grinding spent emulsion were determined from samples taken of these streams. The organic data for these wastewater streams were received too late to be included in the data base.

The annealing furnace atmosphere scrubber liquor waste stream had no toxic pollutants detected above the level considered achievable by specific available treatment methods.

Pollutants Never Detected. The toxic pollutants identified by "ND" in Table VI-2 were not detected in any samples from these wastewater streams; therefore, they were not selected for consideration in establishing regulations for these wastewater streams.

Pollutants Never Found Above Their Analytical Quantification Level. The toxic pollutants identified by "NQ" in Table VI-2 were never found above their analytical quantification level in any samples from these wastewater streams; therefore, they were not selected for consideration in establishing regulations for these wastewater streams.

Pollutants Detected Below Levels Achievable by Treatment. The toxic pollutants identified by "NT" in Table VI-2 were found above their analytical quantification level only at a concentration below the concentration considered achievable by specific available treatment methods; therefore, they were not selected for consideration in establishing regulations for these wastewater streams. The pollutants are individually discussed below.

Acrolein was detected above its analytical quantification level in 2 of 8 samples; however, it was not found above the level considered achievable by specific treatment methods (0.100 mg/l).

Benzene was detected above its analytical quantification level in 1 of 8 samples; however, it was not found above the level considered achievable by specific treatment methods (0.05 mg/l).

Chlorobenzene was detected above its analytical quantification level in 1 of 8 samples; however, it was not found above the level considered achievable by specific treatment methods (0.025 mg/l).

2,4,6-Trichlorophenol was detected above its analytical quantification level in 1 of 9 samples; however, it was not found above the level considered achievable by specific treatment methods (0.025 mg/l).

Chloroform was detected above its analytical quantification level in 2 of 8 samples; however, it was not found above the level considered achievable by specific treatment methods (0.1 mg/l).

Methylene chloride was found above its analytical quantification level in 5 of 8 samples, with values ranging from 0.360 to 1.300 mg/l. This pollutant is not attributable to specific materials or processes associated with rolling with neat oils; however, it is a common solvent used in analytical laboratories, and is not expected to be present in raw wastewaters at concentrations above the level considered achievable by specific available treatment methods (0.100 mg/l).

Antimony was detected above its analytical quantification level in 1 of 11 samples; however, it was not found above the level considered achievable by specific treatment methods (0.47 mg/l).

Cadmium was detected above its analytical quantification level in 2 of 12 samples; however, it was not found above the level considered achievable by specific treatment methods (0.049 mg/l).

Mercury was detected above its analytical quantification level in 1 of 12 samples; however, it was not found above the level considered achievable by specific treatment methods (0.036 mg/l).

Nickel was detected above its analytical quantification level in 5 of 13 samples; however, it was not found above the level considered achievable by specific treatment methods (0.22 mg/l).

Pollutants Detected in a Small Number of Sources. The toxic pollutants identified by "SU" in Table VI-2 were found above their analytical quantification level at only a small number of sources within the category and are uniquely related to only those sources; therefore, they were not selected for consideration in establishing regulations for these wastewater streams. The pollutants are individually discussed below.

1,2-trans-Dichloroethylene was detected above its analytical quantification level in 1 of 8 samples and in 1 of 4 sources.

Butyl benzyl phthalate was detected above its analytical quantification level in 1 of 9 samples and in 1 of 6 sources.

Dimethyl phthalate was detected above its analytical quantification level in 1 of 9 samples and in 1 of 6 sources.

Chrysene was detected above its analytical quantification level in 1 of 9 samples and in 1 of 6 sources.

Acenaphthylene was detected above its analytical quantification level in 1 of 9 samples and in 1 of 6 sources.

Anthracene and phenanthrene are not cleanly separated by the analytical protocol employed in this study; thus, they are reported together. The sum of these pollutants was reported at values greater than their analytical quantification level in 2 of 9 samples and in 1 of 6 sources.

Tetrachloroethylene was detected above its analytical quantification level in 4 of 8 samples; however, it was only found above the level considered achievable by specific treatment methods (0.05 mg/l) in 3 of 8 samples and in 1 of 4 sources.

Trichloroethylene was detected above its analytical quantification level in 1 of 8 samples and in 1 of 4 sources.

Chlordane was detected above its analytical quantification level in 1 of 7 samples and in 1 of 5 sources.

4,4'-DDE was detected above its analytical quantification level in 1 of 7 samples and in 1 of 5 sources.

Alpha-endosulfan was detected above its analytical quantification level in 1 of 7 samples and in 1 of 5 sources.

Beta-endosulfan was detected above its analytical quantification level in 1 of 7 samples and in 1 of 5 sources.

Alpha-BHC was detected above its analytical quantification level in 1 of 7 samples and in 1 of 5 sources.

Beta-BHC was detected above its analytical quantification level in 1 of 7 samples and in 1 of 5 sources.

Arsenic was detected above its analytical quantification level in 5 of 12 samples and in 3 of 5 plants; however, it was found above the level considered achievable by specific treatment methods (0.34 mg/l) at only 1 of 5 plants.

Pollutants Selected for Consideration in Establishing Regulations for the Rolling with Neat Oils Core Waste Streams. The toxic pollutants identified by "RG" in Table VI-2 are those not eliminated from consideration for any of the reasons listed above; therefore, each was selected for consideration in establishing regulations for these wastewater streams. The pollutants are individually discussed below.

Acenaphthene was detected above its analytical quantification level and above the level considered achievable by specific treatment methods (0.010 mg/l) in 2 of 9 samples and in 2 of 6 sources.

Ethylbenzene was detected above its analytical quantification level in 5 of 8 samples and above the level considered achievable by specific treatment methods (0.050 mg/l) in 2 of 8 samples and in 2 of 4 sources.

Fluoranthene was detected above its analytical quantification level and above the level considered achievable by specific treatment methods (0.010 mg/l) in 3 of 9 samples and in 2 of 6 sources.

Naphthalene was detected above its analytical quantification level and above the level considered achievable by specific treatment methods (0.050 mg/l) in 2 of 9 samples and in 2 of 6 sources.

N-nitrosodiphenylamine was detected above its analytical quantification level in 3 of 9 samples and in 2 of 6 sources.

Phenol was detected above its analytical quantification level and above the level considered achievable by specific treatment methods (0.050 mg/l) in 3 of 10 samples and in 3 of 6 sources.

Bis(2-ethylhexyl) phthalate was found above its analytical quantification level in 4 of 9 samples. The maximum concentration observed was 2.900 mg/l.

Di-n-butyl phthalate was found above its analytical quantification level in 4 of 9 samples, ranging from 0.330 to 19.000 mg/l.

Diethyl phthalate was found above its analytical quantification level in 4 of 9 samples. Values ranged from 0.220 to 3.100 mg/l.

Fluorene was detected above its analytical quantification level and above the level considered achievable by specific treatment methods (0.010 mg/l) in 5 of 9 samples and in 4 of 6 sources.

Pyrene was detected above its analytical quantification level and above the level considered achievable by specific treatment methods (0.010 mg/l) in 4 of 9 samples and in 3 of 6 sources.

Toluene was detected above its analytical quantification level in 5 of 8 samples and above the level considered achievable by specific treatment methods (0.050 mg/l) in 3 of 8 samples and in 2 of 4 sources.

Endosulfan sulfate was detected above its analytical quantification level in 2 of 7 samples and in 2 of 5 sources.

Endrin was detected above its analytical quantification level in 2 of 7 samples and in 2 of 5 sources.

Endrin aldehyde was detected above its analytical quantification level in 2 of 7 samples and in 2 of 5 sources.

The seven organic toxic pollutant PCB's (polychlorinated biphenyls) are not cleanly separated by the analytical protocol employed in this study; thus, they are reported in two groups. Each of the two PCB groups was reported present above its analytical quantification level in 3 of 7 samples and in 3 of 5 sources.

Chromium was detected above its analytical quantification level in 6 of 12 samples and above the level considered achievable by specific treatment methods (0.07 mg/l) in 2 of 12 samples and in 2 of 11 sources.

Copper was detected above its analytical quantification level in 5 of 12 samples and above the level considered achievable by

specific treatment methods (0.39 mg/l) in 1 of 12 samples and in 1 of 11 sources.

Lead was detected above its analytical quantification level in 5 of 12 samples and above the level considered achievable by specific treatment methods (0.08 mg/l) in 3 of 12 samples and in 2 of 11 sources.

Zinc was detected above its analytical quantification level in 11 of 12 samples and above the level considered achievable by specific treatment methods (0.23 mg/l) in 6 of 12 samples and in 6 of 11 sources.

Rolling with Emulsions Core Waste Streams

The following waste streams will receive a pollutant discharge allocation in the core of the Rolling with Emulsions Subcategory:

Rolling with Emulsions Spent Emulsions
Roll Grinding Spent Emulsions
Sawing Spent Lubricants
Miscellaneous Nondescript Wastewater Sources

Pollutant data from applicable miscellaneous wastewater sources (points AA-2, AA-3, AA-8, and AA-9) were considered for the miscellaneous nondescript wastewater sources. Characteristics of rolling spent emulsions, sawing spent lubricant, and roll grinding spent emulsions were determined from samples taken from these waste streams.

Pollutants Never Detected. The toxic pollutants identified by "ND" in Table VI-2 were not detected in any samples from these wastewater streams; therefore, they were not selected for consideration in establishing regulations for these wastewater streams.

Pollutants Never Found Above Their Analytical Quantification Level. The toxic pollutants identified by "NQ" in Table VI-2 were never found above their analytical quantification level in any samples from these wastewater streams; therefore, they were not selected for consideration in establishing regulations for these wastewater streams.

Pollutants Detected Below Levels Achievable by Treatment. The toxic pollutants identified by "NT" in Table VI-2 were found above their analytical quantification level only at a concentration below the concentration considered achievable by specific available treatment methods; therefore, they were not selected for consideration in establishing regulations for these

wastewater streams. The pollutants are individually discussed below.

Acrolein was detected above its analytical quantification level in 2 of 8 samples; however, it was not found above the level considered achievable by specific treatment methods (0.100 mg/l).

Benzene was detected above its analytical quantification level in 1 of 8 samples; however, it was not found above the level considered achievable by specific treatment methods (0.05 mg/l).

Chlorobenzene was detected above its analytical quantification level in 1 of 8 samples; however, it was not found above the level considered achievable by specific treatment methods (0.025 mg/l).

2,4,6-Trichlorophenol was detected above its analytical quantification level in 1 of 9 samples; however, it was not found above the level considered achievable by specific treatment methods (0.025 mg/l).

Chloroform was detected above its analytical quantification level in 2 of 8 samples; however, it was not found above the level considered achievable by specific treatment methods (0.1 mg/l).

Methylene chloride was found above its analytical quantification level in 5 of 8 samples, with values ranging from 0.360 to 1.300 mg/l. This pollutant is not attributable to specific materials or processes associated with rolling with emulsions; however, it is a common solvent used in analytical laboratories, and is not expected to be present in raw wastewaters at concentrations above the level considered achievable by specific available treatment methods (0.100 mg/l).

Antimony was detected above its analytical quantification level in 1 of 21 samples; however, it was not found above the level considered achievable by specific treatment methods (0.47 mg/l).

Mercury was detected above its analytical quantification level in 3 of 22 samples; however, it was not found above the level considered achievable by specific treatment methods (0.036 mg/l).

<u>Pollutants Detected in a Small Number of Sources</u>. The toxic pollutants identified by "SU" in Table VI-2 were found above their analytical quantification level at only a small number of sources within the category and are uniquely related to only those sources; therefore, they were not selected for consideration in establishing regulations for these wastewater streams. The pollutants are individually discussed below.

1,2-trans-Dichloroethylene was detected above its analytical quantification level in 1 of 8 samples and in 1 of 4 sources.

Butyl benzyl phthalate was detected above its analytical quantification level in 1 of 9 samples and in 1 of 6 sources.

Dimethyl phthalate was detected above its analytical quantification level in 1 of 9 samples and in 1 of 6 sources.

Chrysene was detected above its analytical quantification level in 1 of 9 samples and in 1 of 6 sources.

Acenaphthylene was detected above its analytical quantification level in 1 of 9 samples and in 1 of 6 sources.

Anthracene and phenanthrene are not cleanly separated by the analytical protocol employed in this study; thus, they are reported together. The sum of these pollutants was reported at values greater than their analytical quantification level in 2 of 9 samples and in 1 of 6 sources.

Tetrachloroethylene was detected above its analytical quantification level in 4 of 8 samples; however, it was only found above the level considered achievable by specific treatment methods (0.05 mg/l) in 3 of 8 samples and in 1 of 4 sources.

Trichloroethylene was detected above its analytical quantification level in 1 of 8 samples and in 1 of 4 sources.

Chlordane was detected above its analytical quantification level in 1 of 7 samples and in 1 of 5 sources.

4,4'-DDE was detected above its analytical quantification level in 1 of 7 samples and in 1 of 5 sources.

Alpha-endosulfan was detected above its analytical quantification level in 1 of 7 samples and in 1 of 5 sources.

Beta-endosulfan was detected above its analytical quantification level in 1 of 7 samples and in 1 of 5 sources.

Alpha-BHC was detected above its analytical quantification level in 1 of 7 samples and in 1 of 5 sources.

Beta-BHC was detected above its analytical quantification level in 1 of 7 samples and in 1 of 5 sources.

Arsenic was detected above its analytical quantification level in 10 of 21 samples; however, it was only found above the level considered achievable by specific treatment methods (0.34 mg/l) in 2

of 21 samples and in 2 of 16 sources. Both of these sources were located at the same plant, out of a total of 8 plants.

Cadmium was detected above its analytical quantification level in 8 of 21 samples; however, it was only found above the level considered achievable by specific treatment methods (0.049 mg/l) in 3 of 21 samples and in 3 of 16 sources. These three sources are located at two different plants.

Nickel was detected above its analytical quantification level in 12 of 22 samples; however, it was only found above the level considered achievable by specific treatment methods (0.22 mg/l) in 2 of 22 samples and in 2 of 17 sources.

Pollutants Selected for Consideration in Establishing Regulations for the Rolling with Emulsions Core Waste Streams. The toxic pollutants identified by "RG" in Table VI-2 are those not eliminated from consideration for any of the reasons listed above; therefore, each was selected for consideration in establishing regulations for these wastewater streams. The pollutants are individually discussed below.

Acenaphthene was detected above its analytical quantification level and above the level considered achievable by specific treatment methods (0.010 mg/l) in 2 of 9 samples and in 2 of 6 sources.

Ethylbenzene was detected above its analytical quantification level in 5 of 8 samples and above the level considered achievable by specific treatment methods (0.050 mg/l) in 2 of 8 samples and in 2 of 4 sources.

Fluoranthene was detected above its analytical quantification level and above the level considered achievable by specific treatment methods (0.010 mg/l) in 3 of 9 samples and in 2 of 6 sources.

Naphthalene was detected above its analytical quantification level and above the level considered achievable by specific treatment methods (0.050 mg/l) in 2 of 9 samples and in 2 of 6 sources.

N-nitrosodiphenylamine was detected above its analytical quantification level in 3 of 9 samples and in 2 of 6 sources.

Phenol was detected above its analytical quantification level and above the level considered achievable by specific treatment methods (0.050 mg/l) in 3 of 10 samples and in 3 of 6 sources.

Bis(2-ethylhexyl) phthalate was found above its analytical quantification level in 4 of 9 samples. The maximum concentration observed was 2.900 mg/l.

Di-n-butyl phthalate was found above its analytical quantification level in 4 of 9 samples, ranging from 0.330 to 19.000 mg/l.

Diethyl phthalate was found above its analytical quantification level in 4 of 9 samples. Values ranged from 0.220 to 3.100 mg/l.

Fluorene was detected above its analytical quantification level and above the level considered achievable by specific treatment methods (0.010 mg/l) in 5 of 9 samples and in 4 of 6 sources.

Pyrene was detected above its analytical quantification level and above the level considered achievable by specific treatment methods (0.010 mg/l) in 4 of 9 samples and in 3 of 6 sources.

Toluene was detected above its analytical quantification level in 5 of 8 samples and above the level considered achievable by specific treatment methods (0.050 mg/l) in 3 of 8 samples and in 2 of 4 sources.

Endosulfan sulfate was detected above its analytical quantification level in 2 of 7 samples and in 2 of 5 sources.

Endrin was detected above its analytical quantification level in 2 of 7 samples and in 2 of 5 sources.

Endrin aldehyde was detected above its analytical quantification level in 2 of 7 samples and in 2 of 5 sources.

The seven organic toxic pollutant PCB's (polychlorinated biphenyls) are not cleanly separated by the analytical protocol employed in this study; thus, they are reported in two groups. Each of the two PCB groups was reported present above its analytical quantification level in 3 of 7 samples and in 3 of 5 sources.

Chromium was detected above its analytical quantification level in 14 of 22 samples and above the level considered achievable by specific treatment methods (0.07 mg/l) in 7 of 22 samples and in 7 of 17 sources.

Copper was detected above its analytical quantification level in 13 of 22 samples and above the level considered achievable by specific treatment methods (0.39 mg/l) in 7 of 22 samples and in 6 of 17 sources.

Cyanide was detected above its analytical quantification level in 8 of 22 samples and above the level considered achievable by specific treatment methods (0.047 mg/l) in 6 of 22 samples and in 3 of 17 sources.

Lead was detected above its analytical quantification level in 13 of 22 samples and above the level considered achievable by specific treatment methods (0.08 mg/l) in 9 of 22 samples and in 6 of 17 sources.

Zinc was detected above its analytical quantification level in 19 of 21 samples and above the level considered achievable by specific treatment methods (0.23 mg/l) in 13 of 21 samples and in 11 of 16 sources.

Extrusion Core Waste Streams

The following waste streams will receive a pollutant discharge allocation in the core of the Extrusion Subcategory:

Extrusion Die Cleaning Bath
Extrusion Die Cleaning Rinse
Extrusion Die Cleaning or Press Scrubber Liquor
Sawing Spent Lubricant
Miscellaneous Nondescript Wastewater Sources

Pollutant data from applicable miscellaneous wastewater sources (points AA-2, AA-3, AA-8, and AA-9) were considered for the miscellaneous nondescript wastewater sources. For the extrusion die cleaning or press scrubber liquor, no toxic metals were detected above their analytical quantification level and above the level considered achievable by specific available treatment methods. Due to a lack of data, the toxic organics in the extrusion die cleaning or press scrubber liquor and the cleaning or etching scrubber liquor are considered to be similar. The same pollutant selection is considered equally applicable to both of these waste streams. As will be discussed in the section on pollutant selection for ancillary waste streams, no toxic organics were selected for consideration in establishing regulations for the cleaning or etching scrubber liquor wastewater stream.

Organic pollutant characteristics of the sawing spent lubricant waste stream were determined from the rolling spent emulsions waste stream. Both of these processes require a lubricant to prevent excess wear on the metal against metal surfaces and to aid by cooling the surfaces. Since the properties of the lubricants required are similar between these two processes, the formulations for each are assumed to be similar; therefore, the characteristics of one are transferable to another.

Toxic metal pollutants and cyanide characteristics of extrusion die cleaning baths and rinses, and sawing spent lubricants were determined from samples taken of these streams.

Pollutants Never Detected. The toxic pollutants identified by "ND" in Table VI-2 were not detected in any samples from these wastewater streams; therefore, they were not selected for consideration in establishing regulations for these wastewater streams.

Pollutants Never Found Above Their Analytical Quantification Level. The toxic pollutants identified by "NQ" in Table VI-2 were never found above their analytical quantification level in any samples from these wastewater streams; therefore, they were not selected for consideration in establishing regulations for these wastewater streams.

Pollutants Detected Below Levels Achievable by Treatment. The toxic pollutants identified by "NT" in Table VI-2 were found above their analytical quantification level only at a concentration below the concentration considered achievable by specific available treatment methods; therefore, they were not selected for consideration in establishing regulations for these wastewater streams. The pollutants are individually discussed below.

Acrolein was detected above its analytical quantification level in 2 of 10 samples; however, it was not found above the level considered achievable by specific treatment methods (0.100 mg/l).

Benzene was detected above its analytical quantification level in 2 of 10 samples; however, it was not found above the level considered achievable by specific treatment methods (0.05 mg/l).

Chlorobenzene was detected above its analytical quantification level in 1 of 10 samples; however, it was not found above the level considered achievable by specific treatment methods (0.025 mg/l).

2,4,6-Trichlorophenol was detected above its analytical quantification level in 1 of 11 samples; however, it was not found above the level considered achievable by specific treatment methods (0.025 mg/l).

Chloroform was detected above its analytical quantification level in 2 of 10 samples; however, it was not found above the level considered achievable by specific treatment methods (0.1 mg/l).

Methylene chloride was found above its analytical quantification level in 7 of 10 samples, with values ranging from 0.021 to 1.300

mg/l. This pollutant is not attributable to specific materials or processes associated with extrusion; however, it is a common solvent used in analytical laboratories, and is not expected to be present in raw wastewaters at concentrations above the level considered achievable by specific available treatment methods (0.100 mg/l).

Antimony was detected above its analytical quantification level in 12 of 22 samples; however, it was not found above the level considered achievable by specific treatment methods (0.47 mg/l).

Cadmium was detected above its analytical quantification level in 7 of 22 samples; however, it was not found above the level considered achievable by specific treatment methods (0.049 mg/l).

Cyanide was detected above its quantitative analytical level in 11 of 22 samples; however, it was not found above the level considered achievable by specific treatment methods (0.047 mg/l).

Mercury was detected above its quantitative analytical level in 2 of 22 samples; however, it was not found above the level considered achievable by specific treatment methods (0.036 mg/l).

Nickel was detected above its analytical quantification level in 6 of 22 samples; however, it was not found above the level considered achievable by specific treatment methods (0.22 mg/l).

Selenium was detected above its quantitative analytical level in 6 of 21 samples; however, it was not found above the level considered achievable by specific treatment methods (0.20 mg/l).

Pollutants Detected in a Small Number of Sources. The toxic pollutants identified by "SU" in Table VI-2 were found above their analytical quantification level at only a small number of sources within the category and are uniquely related to only those sources; therefore, they were not selected for consideration in establishing regulations for these wastewater streams. The pollutants are individually discussed below.

1,2-trans-Dichloroethylene was detected above its analytical quantification level in 1 of 10 samples and in 1 of 6 sources.

Butyl benzyl phthalate was detected above its analytical quantification level in 1 of 11 samples and in 1 of 8 sources.

Dimethyl phthalate was detected above its analytical quantification level in 1 of 11 samples and in 1 of 8 sources.

Chrysene was detected above its analytical quantification level in 1 of 11 samples and in 1 of 8 sources.

Acenaphthylene was detected above its analytical quantification level in 1 of 11 samples and in 1 of 8 sources.

Anthracene and phenanthrene are not cleanly separated by the analytical protocol employed in this study; thus, they are reported together. The sum of these pollutants was reported at values greater than their analytical quantification level in 2 of 11 samples and in 1 of 8 sources.

Tetrachloroethylene was detected above its analytical quantification level in 4 of 10 samples; however, it was only found above the level considered achievable by specific treatment methods (0.05 mg/l) in 3 of 10 samples and in 1 of 6 sources.

Trichloroethylene was detected above its analytical quantification level in 1 of 10 samples and in 1 of 6 sources.

Chlordane was detected above its analytical quantification level in 1 of 9 samples and in 1 of 7 sources.

4,4'-DDE was detected above its analytical quantification level in 1 of 9 samples and in 1 of 7 sources.

Alpha-endosulfan was detected above its analytical quantification level in 1 of 9 samples and in 1 of 7 sources.

Beta-endosulfan was detected above its analytical quantification level in 1 of 9 samples and in 1 of 7 sources.

Alpha-BHC was detected above its analytical quantification level in 1 of 10 samples and in 1 of 8 sources.

Beta-BHC was detected above its analytical quantification level in 1 of 10 samples and in 1 of 8 sources.

Arsenic was detected above its analytical quantification level in 10 of 22 samples. It was found above the level considered achievable by specific treatment methods (0.35 mg/l) in 5 of 22 samples and in 5 of 15 sources.

<u>Pollutants Selected for Consideration in Establishing Regulations for the Extrusion Core Waste Streams</u>. The toxic pollutants identified by "RG" in Table VI-2 are those not eliminated from consideration for any of the reasons listed above; therefore, each was selected for consideration in establishing regulations for these wastewater streams. The pollutants are individually discussed below.

Acenaphthene was detected above its analytical quantification level and above the level considered achievable by specific

treatment methods (0.010 mg/l) in 2 of 10 samples and in 2 of 8 sources.

Ethylbenzene was detected above its analytical quantification level in 5 of 11 samples and above the level considered achievable by specific treatment methods (0.050 mg/l) in 2 of 11 samples and in 2 of 7 sources.

Fluoranthene was detected above its analytical quantification level and above the level considered achievable by specific treatment methods (0.010 mg/l) in 3 of 12 samples and in 2 of 9 sources.

Naphthalene was detected above its analytical quantification level and above the level considered achievable by specific treatment methods (0.050 mg/l) in 2 of 12 samples and in 2 of 9 sources.

N-nitrosodiphenylamine was detected above its analytical quantification level in 3 of 12 samples and in 2 of 9 sources.

Phenol was detected above its analytical quantification level and above the level considered achievable by specific treatment methods (0.050 mg/l) in 3 of 12 samples and in 3 of 8 sources.

Bis(2-ethylhexyl) phthalate was found above its analytical quantification level in 5 of 12 samples. The maximum concentration observed was 2.900 mg/l.

Di-n-butyl phthalate was found above its analytical quantification level in 4 of 12 samples, ranging from 0.330 to 19.000 mg/l.

Diethyl phthalate was found above its analytical quantification level in 4 of 11 samples. Values ranged from 0.220 to 3.100 mg/l.

Fluorene was detected above its analytical quantification level and above the level considered achievable by specific treatment methods (0.010 mg/l) in 5 of 11 samples and in 4 of 8 sources.

Pyrene was detected above its analytical quantification level and above the level considered achievable by specific treatment methods (0.010 mg/l) in 4 of 11 samples and in 3 of 8 sources.

Toluene was detected above its analytical quantification level in 5 of 10 samples and above the level considered achievable by specific treatment methods (0.050 mg/l) in 3 of 10 samples and in 2 of 6 sources.

Endosulfan sulfate was detected above its analytical quantification level in 2 of 9 samples and in 2 of 7 sources.

Endrin was detected above its analytical quantification level in 2 of 9 samples and in 2 of 7 sources.

Endrin aldehyde was detected above its analytical quantification level in 2 of 9 samples and in 2 of 7 sources.

The seven organic toxic pollutant PCB's (polychlorinated biphenyls) are not cleanly separated by the analytical protocol employed in this study; thus, they are reported in two groups. Each of the two PCB groups was reported present above its analytical quantification level in 3 of 9 samples and in 3 of 7 sources.

Chromium was detected above its analytical quantification level in 15 of 22 samples and above the level considered achievable by specific treatment methods (0.07 mg/l) in 6 of 22 samples and in 6 of 15 sources.

Copper was detected above its analytical quantification level in 17 of 22 samples and above the level considered achievable by specific treatment methods (0.39 mg/l) in 7 of 22 samples and in 5 of 15 sources.

Lead was detected above its analytical quantification level in 16 of 22 samples and above the level considered achievable by specific treatment methods (0.08 mg/l) in 10 of 22 samples and in 7 of 15 sources.

Zinc was detected above its analytical quantification level in 22 of 22 samples and above the level considered achievable by specific treatment methods (0.23 mg/l) in 11 of 22 samples and in 9 of 15 sources.

Forging Core Waste Streams

The following waste streams will receive a pollutant discharge allocation in the core of the Forging Subcategory:

Sawing Spent Lubricant
Miscellaneous Nondescript Wastewater Sources

Pollutant data from applicable miscellaneous wastewater sources (points AA-2, AA-3, AA-8, and AA-9) were considered for the miscellaneous nondescript wastewater sources. Organic pollutant characteristics of the sawing spent lubricant waste stream were determined from the rolling spent emulsions waste stream. Both of these processes require a lubricant to prevent excess wear on

the metal against metal surfaces and to aid by cooling the surfaces. Since the properties of the lubricants required are similar between these two processes, the formulations for each ought to be similar; therefore, the characteristics of one are transferable to another.

Toxic metals and cyanide characteristics of the sawing spent lubricant wastewater stream were determined from samples taken of this stream.

Pollutants Never Detected. The toxic pollutants identified by "ND" in Table VI-2 were not detected in any samples from these wastewater streams; therefore, they were not selected for consideration in establishing regulations for these wastewater streams.

Pollutants Never Found Above Their Analytical Quantification Level. The toxic pollutants identified by "NQ" in Table VI-2 were never found above their analytical quantification level in any samples from these wastewater streams; therefore, they were not selected for consideration in establishing regulations for these wastewater streams.

Pollutants Detected Below Levels Achievable by Treatment. The toxic pollutants identified by "NT" in Table VI-2 were found above their analytical quantification level only at a concentration below the concentration considered achievable by specific available treatment methods; therefore, they were not selected for consideration in establishing regulations for these wastewater streams. The pollutants are individually discussed below.

Acrolein was detected above its analytical quantification level in 2 of 8 samples; however, it was not found above the level considered achievable by specific treatment methods (0.100 mg/l).

Benzene was detected above its analytical quantification level in 1 of 8 samples; however, it was not found above the level considered achievable by specific treatment methods (0.05 mg/l).

Chlorobenzene was detected above its analytical quantification level in 1 of 8 samples; however, it was not found above the level considered achievable by specific treatment methods (0.025 mg/l).

2,4,6-Trichlorophenol was detected above its analytical quantification level in 1 of 9 samples; however, it was not found above the level considered achievable by specific treatment methods (0.025 mg/l).

Chloroform was detected above its analytical quantification level in 2 of 8 samples; however, it was not found above the level considered achievable by specific treatment methods (0.1 mg/l).

Methylene chloride was found above its analytical quantification level in 5 of 8 samples, with values ranging from 0.360 to 1.300 mg/l. This pollutant is not attributable to specific materials or processes associated with forging; however, it is a common solvent used in analytical laboratories, and is not expected to be present in raw wastewaters at concentrations above the level considered achievable by specific available treatment methods (0.100 mg/l).

Antimony was detected above its analytical quantification level in 3 of 8 samples; however, it was not found above the level considered achievable by specific treatment methods (0.47 mg/l).

Cadmium was detected above its analytical quantification level in 2 of 8 samples; however, it was not found above the level considered achievable by specific treatment methods (0.049 mg/l).

Nickel was detected above its analytical quantification level in 2 of 8 samples; however, it was not found above the level considered achievable by specific treatment methods (0.22 mg/l).

Pollutants Detected in a Small Number of Sources. The toxic pollutants identified by "SU" in Table VI-2 were found above their analytical quantification level at only a small number of sources within the category and are uniquely related to only those sources; therefore, they were not selected for consideration in establishing regulations for these wastewater streams. The pollutants are individually discussed below.

1,2-trans-Dichloroethylene was detected above its analytical quantification level in 1 of 8 samples and in 1 of 4 sources.

Butyl benzyl phthalate was detected above its analytical quantification level in 1 of 9 samples and in 1 of 6 sources.

Dimethyl phthalate was detected above its analytical quantification level in 1 of 9 samples and in 1 of 6 sources.

Chrysene was detected above its analytical quantification level in 1 of 9 samples and in 1 of 6 sources.

Acenaphthylene was detected above its analytical quantification level in 1 of 9 samples and in 1 of 6 sources.

Anthracene and phenanthrene are not cleanly separated by the analytical protocol employed in this study; thus, they are

reported together. The sum of these pollutants was reported at values greater than their analytical quantification level in 2 of 9 samples and in 1 of 6 sources.

Tetrachloroethylene was detected above its analytical quantification level in 4 of 8 samples; however, it was only found above the level considered achievable by specific treatment methods (0.05 mg/l) in 3 of 8 samples and in 1 of 4 sources.

Trichloroethylene was detected above its analytical quantification level in 1 of 8 samples and in 1 of 4 sources.

Chlordane was detected above its analytical quantification level in 1 of 7 samples and in 1 of 5 sources.

4,4'-DDE was detected above its analytical quantification level in 1 of 7 samples and in 1 of 5 sources.

Alpha-endosulfan was detected above its analytical quantification level in 1 of 7 samples and in 1 of 5 sources.

Beta-endosulfan was detected above its analytical quantification level in 1 of 7 samples and in 1 of 5 sources.

Alpha-BHC was detected above its analytical quantification level in 1 of 7 samples and in 1 of 5 sources.

Beta-BHC was detected above its analytical quantification level in 1 of 7 samples and in 1 of 5 sources.

Arsenic was detected above its analytical quantification level in 2 of 8 samples; however, it was only found above the level considered achievable by specific treatment methods (0.34 mg/l) in 1 of 8 samples and in 1 of 7 sources.

Pollutants Selected for Consideration in Establishing Regulations for the Forging Core Waste Streams. The toxic pollutants identified by "RG" in Table VI-2 are those not eliminated from consideration for any of the reasons listed above; therefore, each was selected for consideration in establishing regulations for these wastewater streams. The pollutants are individually discussed below.

Acenaphthene was detected above its analytical quantification level and above the level considered achievable by specific treatment methods (0.010 mg/l) in 2 of 9 samples and in 2 of 6 sources.

Ethylbenzene was detected above its analytical quantification level in 5 of 8 samples and above the level considered achievable

by specific treatment methods (0.050 mg/l) in 2 of 8 samples and in 2 of 4 sources.

Fluoranthene was detected above its analytical quantification level and above the level considered achievable by specific treatment methods (0.010 mg/l) in 3 of 9 samples and in 2 of 6 sources.

Naphthalene was detected above its analytical quantification level and above the level considered achievable by specific treatment methods (0.050 mg/l) in 2 of 9 samples and in 2 of 6 sources.

N-nitrosodiphenylamine was detected above its analytical quantification level in 3 of 9 samples and in 2 of 6 sources.

Phenol was detected above its analytical quantification level and above the level considered achievable by specific treatment methods (0.050 mg/l) in 3 of 10 samples and in 3 of 6 sources.

Bis(2-ethylhexyl) phthalate was found above its analytical quantification level in 4 of 9 samples. The maximum concentration observed was 2.900 mg/l.

Di-n-butyl phthalate was found above its analytical quantification level in 4 of 9 samples, ranging from 0.330 to 19.000 mg/l.

Diethyl phthalate was found above its analytical quantification level in 4 of 9 samples. Values ranged from 0.220 to 3.100 mg/l.

Fluorene was detected above its analytical quantification level and above the level considered achievable by specific treatment methods (0.010 mg/l) in 5 of 9 samples and in 4 of 6 sources.

Pyrene was detected above its analytical quantification level and above the level considered achievable by specific treatment methods (0.010 mg/l) in 4 of 9 samples and in 3 of 6 sources.

Toluene was detected above its analytical quantification level in 5 of 8 samples and above the level considered achievable by specific treatment methods (0.050 mg/l) in 3 of 8 samples and in 2 of 4 sources.

Endosulfan sulfate was detected above its analytical quantification level in 2 of 7 samples and in 2 of 5 sources.

Endrin was detected above its analytical quantification level in 2 of 7 samples and in 2 of 5 sources.

Endrin aldehyde was detected above its analytical quantification level in 2 of 7 samples and in 2 of 5 sources.

The seven organic toxic pollutant PCB's (polychlorinated biphenyls) are not cleanly separated by the analytical protocol employed in this study; thus, they are reported in two groups. Each of the two PCB groups was reported present above its analytical quantification level in 3 of 7 samples and in 3 of 5 sources.

Chromium was detected above its analytical quantification level in 1 of 8 samples and above the level considered achievable by specific treatment methods (0.07 mg/l) in 1 of 8 samples and in 1 of 7 sources.

Copper was detected above its analytical quantification level in 3 of 8 samples and above the level considered achievable by specific treatment methods (0.39 mg/l) in 1 of 8 samples and in 1 of 7 sources.

Lead was detected above its analytical quantification level in 3 of 8 samples and above the level considered achievable by specific treatment methods (0.08 mg/l) in 3 of 8 samples and in 2 of 6 sources.

Zinc was detected above its analytical quantification level in 8 of 8 samples and above the level considered achievable by specific treatment methods (0.23 mg/l) in 5 of 8 samples and in 5 of 7 sources.

Drawing with Neat Oils Core Waste Streams

The following waste streams will receive a pollutant discharge allocation in the core of the Drawing with Neat Oils Subcategory:

Sawing Spent Lubricants
Miscellaneous Nondescript Wastewater Sources

Pollutant data from applicable miscellaneous wastewater sources (points AA-2, AA-3, AA-8, and AA-9) were considered for the miscellaneous nondescript wastewater sources. Organic pollutant characteristics of the sawing spent lubricants waste stream were determined from the rolling spent emulsions waste stream. Both of these processes require a lubricant to prevent excess wear on the metal against metal surfaces and to aid by cooling the surfaces. Since the properties of the lubricants required are similar between these two processes, the formulations for each ought to be similar; therefore, the characteristics of one are transferable to another.

Toxic metals and cyanide characteristics of sawing spent lubricants were determined from samples taken of this waste stream.

Pollutants Never Detected. The toxic pollutants identified by "ND" in Table VI-2 were not detected in any samples from these wastewater streams; therefore, they were not selected for consideration in establishing regulations for these wastewater streams.

Pollutants Never Found Above Their Analytical Quantification Level. The toxic pollutants identified by "NQ" in Table VI-2 were never found above their analytical quantification level in any samples from these wastewater streams; therefore, they were not selected for consideration in establishing regulations for these wastewater streams.

Pollutants Detected Below Levels Achievable by Treatment. The toxic pollutants identified by "NT" in Table VI-2 were found above their analytical quantification level only at a concentration below the concentration considered achievable by specific available treatment methods; therefore, they were not selected for consideration in establishing regulations for these wastewater streams. The pollutants are individually discussed below.

Acrolein was detected above its analytical quantification level in 2 of 8 samples; however, it was not found above the level considered achievable by specific treatment methods (0.100 mg/l).

Benzene was detected above its analytical quantification level in 1 of 8 samples; however, it was not found above the level considered achievable by specific treatment methods (0.05 mg/l).

Chlorobenzene was detected above its analytical quantification level in 1 of 8 samples; however, it was not found above the level considered achievable by specific treatment methods (0.025 mg/l).

2,4,6-Trichlorophenol was detected above its analytical quantification level in 1 of 9 samples; however, it was not found above the level considered achievable by specific treatment methods (0.025 mg/l).

Chloroform was detected above its analytical quantification level in 2 of 8 samples; however, it was not found above the level considered achievable by specific treatment methods (0.1 mg/l).

Methylene chloride was found above its analytical quantification level in 5 of 8 samples, with values ranging from 0.360 to 1.300 mg/l. This pollutant is not attributable to specific materials

or processes associated with drawing with neat oils; however, it is a common solvent used in analytical laboratories, and is not expected to be present in raw wastewaters at concentrations above the level considered achievable by specific available treatment methods (0.100 mg/l).

Antimony was detected above its analytical quantification level in 3 of 8 samples; however, it was not found above the level considered achievable by specific treatment methods (0.47 mg/l).

Cadmium was detected above its analytical quantification level in 2 of 8 samples; however, it was not found above the level considered achievable by specific treatment methods (0.049 mg/l).

Nickel was detected above its analytical quantification level in 2 of 8 samples; however, it was not found above the level considered achievable by specific treatment methods (0.22 mg/l).

Pollutants Detected in a Small Number of Sources. The toxic pollutants identified by "SU" in Table VI-2 were found above their analytical quantification level at only a small number of sources within the category and are uniquely related to only those sources; therefore, they were not selected for consideration in establishing regulations for these wastewater streams. The pollutants are individually discussed below.

1,2-trans-Dichloroethylene was detected above its analytical quantification level in 1 of 8 samples and in 1 of 4 sources.

Butyl benzyl phthalate was detected above its analytical quantification level in 1 of 9 samples and in 1 of 6 sources.

Dimethyl phthalate was detected above its analytical quantification level in 1 of 9 samples and in 1 of 6 sources.

Chrysene was detected above its analytical quantification level in 1 of 9 samples and in 1 of 6 sources.

Acenaphthylene was detected above its analytical quantification level in 1 of 9 samples and in 1 of 6 sources.

Anthracene and phenanthrene are not cleanly separated by the analytical protocol employed in this study; thus, they are reported together. The sum of these pollutants was reported at values greater than their analytical quantification level in 2 of 9 samples and in 1 of 6 sources.

Tetrachloroethylene was detected above its analytical quantification level in 4 of 8 samples; however, it was only found above

the level considered achievable by specific treatment methods (0.05 mg/l) in 3 of 8 samples and in 1 of 4 sources.

Trichloroethylene was detected above its analytical quantification level in 1 of 8 samples and in 1 of 4 sources.

Chlordane was detected above its analytical quantification level in 1 of 7 samples and in 1 of 5 sources.

4,4'-DDE was detected above its analytical quantification level in 1 of 7 samples and in 1 of 5 sources.

Alpha-endosulfan was detected above its analytical quantification level in 1 of 7 samples and in 1 of 5 sources.

Beta-endosulfan was detected above its analytical quantification level in 1 of 7 samples and in 1 of 5 sources.

Alpha-BHC was detected above its analytical quantification level in 1 of 7 samples and in 1 of 5 sources.

Beta-BHC was detected above its analytical quantification level in 1 of 7 samples and in 1 of 5 sources.

Arsenic was detected above its analytical quantification level in 3 of 8 samples; however, it was only found above the level considered achievable by specific treatment methods (0.34 mg/l) in 2 of 8 samples and in 2 of 7 sources.

Pollutants Selected for Consideration in Establishing Regulations for the Drawing with Neat Oils Core Waste Streams. The toxic pollutants identified by "RG" in Table VI-2 are those not eliminated from consideration for any of the reasons listed above; therefore, each was selected for consideration in establishing regulations for these wastewater streams. The pollutants are individually discussed below.

Acenaphthene was detected above its analytical quantification level and above the level considered achievable by specific treatment methods (0.010 mg/l) in 2 of 9 samples and in 2 of 6 sources.

Ethylbenzene was detected above its analytical quantification level in 5 of 8 samples and above the level considered achievable by specific treatment methods (0.050 mg/l) in 2 of 8 samples and in 2 of 4 sources.

Fluoranthene was detected above its analytical quantification level and above the level considered achievable by specific

treatment methods (0.010 mg/l) in 3 of 9 samples and in 2 of 6 sources.

Naphthalene was detected above its analytical quantification level and above the level considered achievable by specific treatment methods (0.050 mg/l) in 2 of 9 samples and in 2 of 6 sources.

N-nitrosodiphenylamine was detected above its analytical quantification level in 3 of 9 samples and in 2 of 6 sources.

Phenol was detected above its analytical quantification level and above the level considered achievable by specific treatment methods (0.050 mg/l) in 3 of 10 samples and in 3 of 6 sources.

Bis(2-ethylhexyl) phthalate was found above its analytical quantification level in 4 of 9 samples. The maximum concentration observed was 2.900 mg/l.

Di-n-butyl phthalate was found above its analytical quantification level in 4 of 9 samples, ranging from 0.330 to 19.000 mg/l.

Diethyl phthalate was found above its analytical quantification level in 4 of 9 samples. Values ranged from 0.220 to 3.100 mg/l.

Fluorene was detected above its analytical quantification level and above the level considered achievable by specific treatment methods (0.010 mg/l) in 5 of 9 samples and in 4 of 6 sources.

Pyrene was detected above its analytical quantification level and above the level considered achievable by specific treatment methods (0.010 mg/l) in 4 of 9 samples and in 3 of 6 sources.

Toluene was detected above its analytical quantification level in 5 of 8 samples and above the level considered achievable by specific treatment methods (0.050 mg/l) in 3 of 8 samples and in 2 of 4 sources.

Endosulfan sulfate was detected above its analytical quantification level in 2 of 7 samples and in 2 of 5 sources.

Endrin was detected above its analytical quantification level in 2 of 7 samples and in 2 of 5 sources.

Endrin aldehyde was detected above its analytical quantification level in 2 of 7 samples and in 2 of 5 sources.

The seven organic toxic pollutant PCB's (polychlorinated biphenyls) are not cleanly separated by the analytical protocol employed in this study; thus, they are reported in two groups.

Each of the two PCB groups was reported present above its analytical quantification level in 3 of 7 samples and in 3 of 5 sources.

Chromium was detected above its analytical quantification level in 1 of 8 samples and above the level considered achievable by specific treatment methods (0.08 mg/l) in 1 of 8 samples and in 1 of 7 sources.

Copper was detected above its analytical quantification level in 3 of 8 samples and above the level considered achievable by specific treatment methods (0.39 mg/l) in 1 of 8 samples and in 1 of 7 sources.

Lead was detected above its analytical quantification level in 3 of 8 samples and above the level considered achievable by specific treatment methods (0.07 mg/l) in 3 of 8 samples and in 2 of 7 sources.

Zinc was detected above its analytical quantification level in 8 of 8 samples and above the level considered achievable by specific treatment methods (0.23 mg/l) in 5 of 8 samples and in 5 of 7 sources.

Drawing With Emulsions or Soaps Core Waste Streams

The following waste streams will receive a pollutant discharge allocation in the core of the Drawing With Emulsions or Soaps Subcateogry:

Drawing With Emulsions or Soaps Spent Lubricants
Sawing Spent Lubricants
Miscellaneous Non-Descript Wastewater Sources

Pollutant data from applicable miscellaneous wastewater sources (points AA-2, AA-3, AA-8, and AA-9) were considered for the miscellaneous non-descript wastewater sources. Drawing with emulsions or soaps spent lubricants were only sampled at one facility; however, the volatile organics and toxic metals were not analyzed in that sample. Toxic metals and cyanide characteristics of the sawing spent lubricants waste stream were determined from samples of this stream. Where necessary due to a lack of data, toxic pollutant characteristics of the sawing spent emulsions and drawing spent emulsions or soaps waste streams were determined from the rolling spent emulsions waste stream. All three of these processes require a lubricant to prevent excess wear on the metal against metal surfaces and to aid by cooling the surfaces. Since the properties of the lubricants required are similar between these three processes, the formulations for

each ought to be similar; therefore, the characteristics of one are transferable to another.

Pollutants Never Detected. The toxic pollutants identified by "ND" in Table VI-2 were not detected in any samples from these wastewater streams; therefore, they were not selected for consideration in establishing regulations for these wastewater streams.

Pollutants Never Found Above Their Analytical Quantification Level. The toxic pollutants identified by "NQ" in Table VI-2 were never found above their analytical quantification level in any samples from these wastewater streams; therefore, they were not selected for consideration in establishing regulations for these wastewater streams.

Pollutants Detected Below Levels Achievable by Treatment. The toxic pollutants identified by "NT" in Table VI-2 were found above their analytical quantification level only at a concentration below the concentration considered achievable by specific available treatment methods; therefore, they were not selected for consideration in establishing regulations for these wastewater streams. The pollutants are individually discussed below.

Acrolein was detected above its analytical quantification level in 2 of 8 samples; however, it was not found above the level considered achievable by specific treatment methods (0.100 mg/l).

Benzene was detected above its analytical quantification level in 1 of 8 samples; however, it was not found above the level considered achievable by specific treatment methods (0.05 mg/l).

Chlorobenzene was detected above its analytical quantification level in 1 of 8 samples; however, it was not found above the level considered achievable by specific treatment methods (0.025 mg/l).

2,4,6-Trichlorophenol was detected above its analytical quantification level in 1 of 10 samples; however, it was not found above the level considered achievable by specific treatment methods (0.025 mg/l).

Chloroform was detected above its analytical quantification level in 2 of 8 samples; however, it was not found above the level considered achievable by specific treatment methods (0.1 mg/l).

Methylene chloride was found above its analytical quantification level in 5 of 8 samples, with values ranging from 0.360 to 1.300 mg/l. This pollutant is not attributable to specific materials

or processes associated with continuous casting; however, it is a common solvent used in analytical laboratories, and is not expected to be present in raw wastewaters at concentrations above the level considered achievable by specific available treatment methods (0.100 mg/l).

Antimony was detected above its analytical quantification level in 4 of 18 samples; however, it was not found above the level considered achievable by specific treatment methods (0.47 mg/l).

Mercury was detected above its analytical quantification level in 4 of 18 samples; however, it was only found above the level considered achievable by specific treatment methods (0.036 mg/l).

Pollutants Detected in a Small Number of Sources. The toxic pollutants identified by "SU" in Table VI-2 were found above their analytical quantification level at only a small number of sources within the category and are uniquely related to only those sources; therefore, they were not selected for consideration in establishing regulations for these wastewater streams. The pollutants are individually discussed below.

p-Chloro-m-cresol was detected above its analytical quantification level in 1 of 11 samples and in 1 of 7 sources.

2-Chlorophenol was detected above its analytical quantification level in 1 of 11 samples and in 1 of 7 sources.

1,2-trans-Dichloroethylene was detected above its analytical quantification level in 1 of 8 samples and in 1 of 4 sources.

2,4-Dinitrotoluene was detected above its analytical quantification level in 1 of 10 samples and in 1 of 7 sources.

1,2-Diphenylhydrazine was detected above its analytical quantification level in 1 of 10 samples and in 1 of 7 sources.

Isosphorone was detected above its analytical quantification level in 1 of 10 samples and in 1 of 7 sources.

Butyl benzyl phthalate was detected above its analytical quantification level in 1 of 10 samples and in 1 of 7 sources.

Di-n-octyl phthalate was detected above its analytical quantification level in 1 of 10 samples and in 1 of 7 sources.

Dimethyl phthalate was detected above its analytical quantification level in 1 of 10 samples and in 1 of 7 sources.

Chrysene was detected above its analytical quantification level in 1 of 10 samples and in 1 of 7 sources.

Acenaphthylene was detected above its analytical quantification level in 1 of 10 samples and in 1 of 7 sources.

Anthracene and phenanthrene are not cleanly separated by the analytical protocol employed in this study; thus, they are reported together. The sum of these pollutants was reported at values greater than their analytical quantification level in 2 of 10 samples and in 1 of 7 sources.

Tetrachloroethylene was detected above its analytical quantification level in 4 of 8 samples; however, it was only found above the level considered achievable by specific treatment methods (0.05 mg/l) in 3 of 8 samples and in 1 of 4 sources.

Trichloroethylene was detected above its analytical quantification level in 1 of 8 samples and in 1 of 4 sources.

Chlordane was detected above its analytical quantification level in 1 of 8 samples and in 1 of 6 sources.

4,4'-DDE was detected above its analytical quantification level in 1 of 8 samples and in 1 of 6 sources.

Alpha-endosulfan was detected above its analytical quantification level in 1 of 8 samples and in 1 of 6 sources.

Beta-endosulfan was detected above its analytical quantification level in 1 of 8 samples and in 1 of 6 sources.

Alpha-BHC was detected above its analytical quantification level in 1 of 8 samples and in 1 of 6 sources.

Beta-BHC was detected above its analytical quantification level in 1 of 8 samples and in 1 of 6 sources.

Arsenic was detected above its analytical quantification level in 8 of 18 samples; however, it was only found above the level considered achievable by specific treatment methods (0.34 mg/l) in 2 of 18 samples and in 2 of 13 sources.

Cadmium was detected above its analytical quantification level in 8 of 18 samples; however, it was only found above the level considered achievable by specific treatment methods (0.049 mg/l) in 3 of 18 samples and in 3 of 13 sources.

Nickel was detected above its analytical quantification level in 9 of 18 samples; however, it was only found above the level con-

sidered achievable by specific treatment methods (0.22 mg/l) in 3 of 18 samples and in 2 of 13 sources.

Pollutants Selected for Consideration in Establishing Regulations for the Drawing With Emulsions or Soaps Core Waste Streams. The toxic pollutants identified by "RG" in Table VI-2 are those not eliminated from consideration for any of the reasons listed above; therefore, each was selected for consideration in establishing regulations for these wastewater streams. The pollutants are individually discussed below.

Acenaphthene was detected above its analytical quantification level and above the level considered achievable by specific treatment methods (0.010 mg/l) in 2 of 10 samples and in 2 of 7 sources.

Ethylbenzene was detected above its analytical quantification level in 5 of 8 samples and above the level considered achievable by specific treatment methods (0.050 mg/l) in 2 of 8 samples and in 2 of 4 sources.

Fluoranthene was detected above its analytical quantification level and above the level considered achievable by specific treatment methods (0.010 mg/l) in 3 of 10 samples and in 2 of 7 sources.

Naphthalene was detected above its analytical quantification level and above the level considered achievable by specific treatment methods (0.050 mg/l) in 2 of 10 samples and in 2 of 7 sources.

N-nitrosodiphenylamine was detected above its analytical quantification level in 3 of 10 samples and in 2 of 7 sources.

Phenol was detected above its analytical quantification level and above the level considered achievable by specific treatment methods (0.050 mg/l) in 3 of 11 samples and in 3 of 7 sources.

Bis(2-ethylhexyl) phthalate was found above its analytical quantification level in 5 of 10 samples. The maximum concentration observed was 2.900 mg/l.

Di-n-butyl phthalate was found above its analytical quantification level in 5 of 10 samples, ranging from 0.034 to 19.000 mg/l.

Diethyl phthalate was found above its analytical quantification level in 4 of 10 samples. Values ranged from 0.220 to 3.100 mg/l.

Fluorene was detected above its analytical quantification level and above the level considered achievable by specific treatment methods (0.010 mg/l) in 5 of 10 samples and in 4 of 7 sources.

Pyrene was detected above its analytical quantification level and above the level considered achievable by specific treatment methods (0.010 mg/l) in 4 of 10 samples and in 3 of 7 sources.

Toluene was detected above its analytical quantification level in 5 of 8 samples and above the level considered achievable by specific treatment methods (0.050 mg/l) in 3 of 8 samples and in 2 of 4 sources.

Endosulfan sulfate was detected above its analytical quantification level in 2 of 8 samples and in 2 of 6 sources.

Endrin was detected above its analytical quantification level in 2 of 8 samples and in 2 of 6 sources.

Endrin aldehyde was detected above its analytical quantification level in 2 of 8 samples and in 2 of 6 sources.

The seven organic toxic pollutant PCB's (polychlorinated biphenyls) are not cleanly separated by the analytical protocol employed in this study; thus, they are reported in two groups. Each of the two PCB groups was reported present above its analytical quantification level in 3 of 8 samples and in 3 of 6 sources.

Chromium was detected above its analytical quantification level in 10 of 18 samples and above the level considered achievable by specific treatment methods (0.07 mg/l) in 5 of 18 samples and in 5 of 13 sources.

Copper was detected above its analytical quantification level in 12 of 18 samples and above the level considered achievable by specific treatment methods (0.39 mg/l) in 7 of 18 samples and in 6 of 13 sources.

Cyanide was detected above its analytical quantification level in 8 of 18 samples and above the level considered achievable by specific treatment methods (0.047 mg/l) in 6 of 18 samples and in 3 of 13 sources.

Lead was detected above its analytical quantification level in 11 of 18 samples and above the level considered achievable by specific treatment methods (0.08 mg/l) in 9 of 18 samples and in 6 of 13 sources.

Zinc was detected above its analytical quantification level in 17 of 18 samples and above the level considered achievable by specific treatment methods (0.23 mg/l) in 12 of 18 samples and in 10 of 13 sources.

POLLUTANT SELECTION FOR ANCILLARY WASTE STREAMS

The pollutant selection procedure was performed for the following ancillary operations to select those toxic pollutants that would be considered for establishing regulations for these wastewater streams:

Direct Chill Casting Contact Cooling Water
Continuous Rod Casting Contact Cooling Water
Continuous Sheet Casting Spent Lubricants
Continuous Rod Casting Spent Lubricants
Forging Scrubber Liquor
Solution and Press Heat Treatment Contact Cooling Water
Cleaning or Etching Bath
Cleaning or Etching Rinse
Cleaning or Etching Scrubber Liquor
Degassing Scrubber Liquor
Extrusion Press Hydraulic Fluid Leakage

Direct Chill Casting Contact Cooling Water

Continuous Rod Casting Contact Cooling Water

The Agency did not sample the continuous rod casting contact cooling water waste stream. The characteristics of this waste stream are determined to be the same as the direct chill casting contact cooling water. Both casting processes use water to cool the aluminum as it is cast, and since the alumium that water contacts is essentially the same in both processes, the characteristics of one are transferable to the other.

Pollutants Never Detected. The toxic pollutants identified by "ND" in Table VI-3 were not detected in any samples from these wastewater streams; therefore, they were not selected for consideration in establishing regulations for these wastewater streams.

Pollutants Never Found Above Their Analytical Quantification Level. The toxic pollutants identified by "NQ" in Table VI-3 were never found above their analytical quantification level in any samples from these wastewater streams; therefore, they were not selected for consideration in establishing regulations for these wastewater streams.

Pollutants Detected Below Levels Achievable by Treatment. The toxic pollutants identified by "NT" in Table VI-3 were found above their analytical quantification level only at a concentration below the concentration considered achievable by specific available treatment methods; therefore, they were not selected for consideration in establishing regulations for these wastewater streams. The pollutants are individually discussed below.

Benzene was detected above its analytical quantification level once in 23 samples. In addition, the single quantified value of 0.013 mg/l is below the level considered achievable by specific available treatment of 0.05 mg/l.

2-Chlorophenol was present above its analytical quantification level in only 1 of 20 samples. In addition, the single reported value of 0.012 mg/l is well below the level of 0.05 mg/l considered achievable by specific available treatment.

Methylene chloride was found above its analytical quantification level in 13 of 23 samples, with values ranging from 0.04 to 0.47 mg/l. This pollutant is not attributable to specific materials or processes associated with direct chill casting or continuous rod casting contact cooling water; however, it is a common solvent used in analytical laboratories, and is not expected to be present in raw wastewaters at concentrations above the level considered achievable by specific available treatment methods (0.100 mg/l).

Cadmium was reported present above its analytical quantification level in 6 of 20 samples. The maximum observed value was 0.020 mg/l. The level of cadmium considered achievable by specific available treatment methods is 0.049 mg/l.

Copper was reported present in 17 of 20 samples at concentrations greater than its analytical quantification level. The maximum concentration of copper observed was 0.030 mg/l, while the concentration considered achievable by specific available treatment methods 0.39 mg/l.

Mercury was detected above its analytical quantification level in 14 of 20 samples, ranging from 0.0004 to 0.020 mg/l. All values are below the level considered achievable by specific available treatment of 0.036 mg/l.

Nickel was reported present above its analytical quantification level in just 2 of 20 samples. The maximum measured value, 0.020 mg/l, is less than the level considered achievable by specific available treatment methods (0.22 mg/l).

Pollutants Detected in a Small Number of Sources. The toxic pollutants identified by "SU" in Table VI-3 were found above their analytical quantification level at only a small number of sources within the category and are uniquely related to only those sources; therefore, they were not selected for consideration in establishing regulations for these wastewater streams. The pollutants are individually discussed below.

Acenaphthene was reported present above its analytical quantification level in 2 of 20 samples and in 2 of 12 sources. Both sources containing measurable amounts of acenaphthene were at the same plant.

Chloroform was found above its analytical quantification level in 11 of 23 samples, with values ranging from 0.012 to 0.15 mg/l. Only one of the reported values is above the level considered achievable by specific available treatment of 0.1 mg/l.

Isophorone was reported above its analytical quantification level in 2 of 20 samples and in 1 of 12 sources.

2,4-Dinitrophenol was reported at a concentration above its analytical quantification level in only 1 of 20 samples and in 1 of 12 sources. The observed concentration was 0.042 mg/l. The level considered achievable by specific available treatment methods is 0.025 mg/l.

4,6-Dinitro-o-cresol was reported at a concentration above its analytical quantification level in only 1 of 20 samples and 1 of 12 sources. The observed concentration was 0.042 mg/l. The level considered achievable by specific available treatment methods is 0.025 mg/l.

N-nitrosodiphenylamine was reported at concentrations above its analytical quantification level in only 2 of 20 samples and in 1 of 12 sources. The values observed were 0.044 and 0.057 mg/l.

Phenol was reported at a concentration above its analytical quantification level in 3 of 20 samples. However, it was found above the concentration achievable through treatment in only one sample at 1 out of 12 sources.

Butyl benzyl phthalate was reported at a concentration above its analytical quantification level in 5 of 20 samples and in 3 of 12 sources. However, it was found in only 2 of 9 plants.

Di-n-octyl phthalate was reported at a concentration above its analytical quantification level in 2 of 20 samples at 2 of 12 sources and 1 of 9 plants.

Diethyl phthalate was reported at a concentration above its analytical quantification level in 3 of 20 samples. However, it was only found in 2 of 9 plants.

Dimethyl phthalate was reported at a concentration greater than its analytical quantification level in only 1 of 20 samples and in 1 of 12 sources. The observed concentration was 0.053 mg/l.

Acenaphthylene was reported at a concentration greater than its analytical quantification level in 1 of 20 samples and in 1 of 12 sources. The observed concentration was 0.012 mg/l.

Anthracene and phenanthrene are not cleanly separated by the analytical protocol employed in this study; thus, they are reported together. The sum of these pollutants was reported at values greater than their analytical quantification level in just 2 of 20 samples and in 1 of 12 sources.

Fluorene was reported present above its analytical quantification level in 2 of 20 samples and in 1 of 12 sources.

Chlordane was reported present above its analtyical quantification level in 2 of 16 samples and in 2 of 12 sources. Both reported concentrations of chlordane came from sources at one plant, and were above the level considered achievable by specific available treatment methods.

The seven organic toxic pollutant PCB's (polychlorinated biphenyls) are not cleanly separated by the analytical protocol employed in this study; thus they are reported in two groups. Each of the two PCB groups was reported present above its analytical quantificaiton level in 2 of 16 samples and in 2 of 12 sources. The reported values all were for sources at one plant.

Chromium was reported present above its analytical concentration level in 6 of 20 samples an in 4 of 12 sources. Only one sample contained chromium at a level greater than that considered achievable by specific available treatment methods (0.07 mg/l).

Lead was found above its analytical quantification level in 15 of 20 samples. Values ranged from 0.002 to 0.100 mg/l. Four of the values at 2 of 12 sources were above the level considered achievable by specific treatment (0.08 mg/l); however, both sources were at the same plant.

<u>Pollutants Selected for Consideration in Establishing Regulations for the Direct Chill Casting and Continuous Rod Casting Contact Cooling Water Waste Streams</u>. The toxic pollutants identified by "RG" in Table VI-3 are those not eliminated from consideration for any of the reasons listed above; therefore, each was selected

for consideration in establishing regulations for these wastewater streams. The pollutants are individually discussed below.

Bis(2-ethylhexyl) phthalate was found above its analytical quantification level in 9 of 20 samples. All 9 values were greater than the concentrations considered achievable by specific available treatment methods. The maximum concentration reported is 0.280 mg/l.

Di-n-butyl phthalate was reported at a concentration above its analytical quantification level in 8 of 20 samples.

Zinc was found above its analytical quantification level in 14 of 20 samples. Values ranged from 0.1 to 1.0 mg/l. Five of the sample values were above the level considered achievable by specific treatment of 0.23 mg/l.

Continuous Sheet Casting Spent Lubricants

Continuous Rod Casting Spent Lubricants

The Agency did not sample the continuous rod casting or continuous sheet casting spent lubricant. The characteristics of these wastes are determined to be the same as the rolling spent emulsion. Rolling and continuous casting of rod or sheet, require a lubricant to prevent excess wear on the metal against metal surfaces and to aid by cooling the surfaces. Since the properties of the lubricants required are similar between these processes, the formulations for each ought to be similar, therefore the characteristics of one are transferable to another.

Pollutants Never Detected. The toxic pollutants identified by "ND" in Table VI-3 were not detected in any samples from these wastewater streams; therefore, they were not selected for consideration in establishing regulations for these wastewater streams.

Pollutants Never Found Above Their Analytical Quantification Level. The toxic pollutants identified by "NQ" in Table VI-3 were never found above their analytical quantification level in any samples from these wastewater streams; therefore, they were not selected for consideration in establishing regulations for these wastewater streams.

Pollutants Detected Below Levels Achievable by Treatment. The toxic pollutants identified by "NT" in Table VI-3 were found above their analytical quantification level only at a concentration below the concentration considered achievable by specific available treatment methods; therefore, they were not

selected for consideration in establishing regulations for these wastewater streams. The pollutants are individually discussed below.

Acrolein was detected above its analytical quantification level in 2 of 8 samples; however, it was not found above the level considered achievable by specific treatment methods (0.100 mg/l).

Benzene was detected above its analytical quantification level in 1 of 8 samples; however, it was not found above the level considered achievable by specific treatment methods (0.05 mg/l).

Chlorobenzene was detected above its analytical quantification level in 1 of 8 samples; however, it was not found above the level considered achievable by specific treatment methods (0.025 mg/l).

2,4,6-Trichlorophenol was detected above its analytical quantification level in 1 of 9 samples; however, it was not found above the level considered achievable by specific treatment methods (0.025 mg/l).

Chloroform was detected above its analytical quantification level in 2 of 8 samples; however, it was not found above the level considered achievable by specific treatment methods (0.1 mg/l).

Methylene chloride was found above its analytical quantification level in 5 of 8 samples, with values ranging from 0.360 to 1.300 mg/l. This pollutant is not attributable to specific materials or processes associated with continuous casting; however, it is a common solvent used in analytical laboratories, and is not expected to be present in raw wastewaters at concentrations above the level considered achievable by specific available treatment methods (0.100 mg/l).

Arsenic was detected above its analytical quantification level in 5 of 10 samples; however, it was not found above the level considered achievable by specific treatment methods (0.34 mg/l).

Mercury was detected above its analytical quantification level in 3 of 10 samples; however, it was not found above the level considered achievable by specific treatment methods (0.036 mg/l).

<u>Pollutants Detected in a Small Number of Sources</u>. The toxic pollutants identified by "SU" in Table VI-3 were found above

their analytical quantification level at only a small number of sources within the category and are uniquely related to only those sources; therefore, they were not selected for consideration in establishing regulations for these wastewater streams. The pollutants are individually discussed below.

1,2-trans-Dichloroethylene was detected above its analytical quantification level in 1 of 8 samples and in 1 of 4 sources.

Butyl benzyl phthalate was detected above its analytical quantification level in 1 of 9 samples and in 1 of 6 sources.

Dimethyl phthalate was detected above its analytical quantification level in 1 of 9 samples and in 1 of 6 sources.

Chrysene was detected above its analytical quantification level in 1 of 9 samples and in 1 of 6 sources.

Acenaphthylene was detected above its analytical quantification level in 1 of 9 samples and in 1 of 6 sources.

Anthracene and phenanthrene are not cleanly separated by the analytical protocol employed in this study; thus, they are reported together. The sum of these pollutants was reported at values greater than their analytical quantification level in 2 of 9 samples and in 1 of 6 sources.

Tetrachloroethylene was detected above its analytical quantification level in 4 of 8 samples; however, it was only found above the level considered achievable by specific treatment methods (0.05 mg/l) in 3 of 8 samples and in 1 of 4 sources.

Trichloroethylene was detected above its analytical quantification level in 1 of 8 samples and in 1 of 4 sources.

Chlordane was detected above its analytical quantification level in 1 of 7 samples and in 1 of 5 sources.

4,4'-DDE was detected above its analytical quantification level in 1 of 7 samples and in 1 of 5 sources.

Alpha-endosulfan was detected above its analytical quantification level in 1 of 7 samples and in 1 of 5 sources.

Beta-endosulfan was detected above its analytical quantification level in 1 of 7 samples and in 1 of 5 sources.

Alpha-BHC was detected above its analytical quantification level in 1 of 7 samples and in 1 of 5 sources.

Beta-BHC was detected above its analytical quantification level in 1 of 7 samples and in 1 of 5 sources.

Cadmium was detected above its analytical quantification level in 6 of 10 samples; however, it was only found above the level considered achievable by specific treatment methods (0.049 mg/l) in 3 of 10 samples and in 3 of 6 sources. These sources were located at two different plants.

Nickel was detected above its analytical quantification level in 7 of 10 samples; however, it was only found above the level considered achievable by specific treatment methods (0.22 mg/l) in 2 of 10 samples and in 2 of 6 sources.

Pollutants Selected for Consideration in Establishing Regulations for the Continuous Sheet Casting and Continuous Rod Casting Spent Lubricants Waste Streams. The toxic pollutants identified by "RG" in Table VI-3 are those not eliminated from consideration for any of the reasons listed above; therefore, each was selected for consideration in establishing regulations for these wastewater streams. The pollutants are individually discussed below.

Acenaphthene was detected above its analytical quantification level and above the level considered achievable by specific treatment methods (0.010 mg/l) in 2 of 9 samples and in 2 of 6 sources.

Ethylbenzene was detected above its analytical quantification level in 5 of 8 samples and above the level considered achievable by specific treatment methods (0.050 mg/l) in 2 of 8 samples and in 2 of 4 sources.

Fluoranthene was detected above its analytical quantification level and above the level considered achievable by specific treatment methods (0.010 mg/l) in 3 of 9 samples and in 2 of 6 sources.

Naphthalene was detected above its analytical quantification level and above the level considered achievable by specific treatment methods (0.050 mg/l) in 2 of 9 samples and in 2 of 6 sources.

N-nitrosodiphenylamine was detected above its analytical quantification level in 3 of 9 samples and in 2 of 6 sources.

Phenol was detected above its analytical quantification level and above the level considered achievable by specific treatment methods (0.050 mg/l) in 3 of 10 samples and in 3 of 6 sources.

Bis(2-ethylhexyl) phthalate was found above its analytical quantification level in 4 of 9 samples. The maximum concentration observed was 2.900 mg/l.

Di-n-butyl phthalate was found above its analytical quantification level in 4 of 9 samples, ranging from 0.330 to 19.000 mg/l.

Diethyl phthalate was found above its analytical quantification level in 4 of 9 samples. Values ranged from 0.220 to 3.100 mg/l.

Fluorene was detected above its analytical quantification level and above the level considered achievable by specific treatment methods (0.010 mg/l) in 5 of 9 samples and in 4 of 6 sources.

Pyrene was detected above its analytical quantification level and above the level considered achievable by specific treatment methods (0.010 mg/l) in 4 of 9 samples and in 3 of 6 sources.

Toluene was detected above its analytical quantification level in 5 of 8 samples and above the level considered achievable by specific treatment methods (0.050 mg/l) in 3 of 8 samples and in 2 of 4 sources.

Endosulfan sulfate was detected above its analytical quantification level in 2 of 7 samples and in 2 of 5 sources.

Endrin was detected above its analytical quantification level in 2 of 7 samples and in 2 of 5 sources.

Endrin aldehyde was detected above its analytical quantification level in 2 of 7 samples and in 2 of 5 sources.

The seven organic toxic pollutant PCB's (polychlorinated biphenyls) are not cleanly separated by the analytical protocol employed in this study; thus, they are reported in two groups. Each of the two PCB groups was reported present above its analytical quantification level in 3 of 7 samples and in 3 of 5 sources.

Chromium was detected above its analytical quantification level in 9 of 10 samples and above the level considered achievable by specific treatment methods (0.07 mg/l) in 4 of 10 samples and in 4 of 6 sources.

Copper was detected above its analytical quantification level in 9 of 10 samples and above the level considered achievable by specific treatment methods (0.39 mg/l) in 6 of 10 samples and in 5 of 6 sources.

Cyanide was detected above its analytical quantification level in 8 of 10 samples and above the level considered achievable by specific treatment methods (0.047 mg/l) in 6 of 10 samples and in 3 of 6 sources.

Lead was detected above its analytical quantification level in 8 of 10 samples and above the level considered achievable by specific treatment methods (0.08 mg/l) in 6 of 10 samples and in 4 of 6 sources.

Zinc was detected above its analytical quantification level in 9 of 10 samples and above the level considered achievable by specific treatment methods (0.23 mg/l) in 7 of 10 samples and in 5 of 6 sources.

Forging Scrubber Liquor

Pollutants Never Detected. The toxic pollutants identified by "ND" in Table VI-3 were not detected in any samples from this wastewater stream; therefore, they were not selected for consideration in establishing regulations for this wastewater stream.

Pollutants Never Found Above Their Analytical Quantification Level. The toxic pollutants identified by "NQ" in Table VI-3 were never found above their analytical quantification level in any samples from this wastewater stream; therefore, they were not selected for consideration in establishing regulations for this wastewater stream.

Pollutants Detected Below Levels Achievable by Treatment. The toxic pollutants identified by "NT" in Table VI-3 were found above their analytical quantification level only at a concentration below the concentration considered achievable by specific available treatment methods; therefore, they were not selected for consideration in establishing regulations for this wastewater stream. The pollutants are individually discussed below.

The presence of methylene chloride in this wastewater sample at the high level observed (0.95 mg/l) is assumed to be due to sample contamination, since methylene chloride is used by the analytical laboratory to extract the non-volatile organics from the sample, and is not expected to be present in raw wastewaters at concentrations above the level considered achievable by specific available treatment methods (0.100 mg/l).

Copper was measured at a concentration of 0.010 mg/l in the one sample collected. This value is only slightly greater than the values for its analytical quantification level (0.009 mg/l), and

less than the level considered achievable by available treatment methods (0.39 mg/l).

Mercury was reported at 0.0005 mg/l in the only sample collected; the level considered achievable by specific available treatment is 0.036 mg/l.

Pollutants Selected for Consideration in Establishing Regulations for the Forging Scrubber Liquor Waste Stream. The toxic pollutants identified by "RG" in Table VI-3 are those not eliminated from consideration for any of the reasons listed above; therefore, each was selected for consideration in establishing regulations for this wastewater stream. The pollutants are individually discussed below.

Fluoranthene was found at a concentration of 0.018 mg/l in the waste stream sample. For fluoranthene, this exceeds both its analytical quantification level of 0.010 mg/l, and the level considered achievable by specific available treatment methods, which is also 0.010 mg/l.

N-nitrosodiphenylamine was found above the levels for both its proposed water quality criterion and its analytical quantification level as well as the level considered attainable by specific available treatment methods. The observed pollutant concentration was 0.017 mg/l.

Bis(2-ethylhexyl) phthalate was present at a concentration of 0.075 mg/l in the one sample collected. This is greater than the level attainable by specific treatment methods (0.01 mg/l).

Benzo(a)anthracene was found present in the sample at 0.019 mg/l. This exceeds both its analytical quantification level, and the level considered achievable by specific available treatment methods.

Chrysene was detected at a level of 0.019 mg/l in the only sample collected from this waste stream. The analytical quantification level for chrysene is 0.010 mg/l, and the level considered achievable by specific available treatment is 0.010 mg/l. The concentration of chrysene exceeds this level.

The combined concentration of anthracene and phenanthrene in this waste stream was found to be 0.028 mg/l. This exceeds the analytical quantification level and treatability level, both of which are 0.010 mg/l.

Pyrene was found at a concentration of 0.021 mg/l in the waste stream sample, which is above the analytical quantification level

of 0.010 mg/l for pyrene. This concentration is also above the treatability level (0.010 mg/l).

Lead was present in the sample at a concentration of 2.00 mg/l. This exceeds the analytical quantification level and the level considered achievable by available treatment methods (0.020 mg/l and 0.08 mg/l, respectively) for lead.

Zinc was found in the sample at a concentration of 0.300 mg/l which exceeds the concentration considered achievable by available treatment technologies (0.23 mg/l).

Solution and Press Heat Treatment Contact Cooling Water

Solution and press heat treatment contact cooling water samples for all operations are combined for the purpose of selecting pollutants for consideration for regulation.

Pollutants Never Detected. The toxic pollutants identified by "ND" in Table VI-3 were not detected in any samples from these wastewater streams; therefore, they were not selected for consideration in establishing regulations for these wastewater streams.

Pollutants Never Found Above Their Analytical Quantification Level. The toxic pollutants identified by "NQ" in Table VI-3 were never found above their analytical quantification level in any samples from this wastewater stream; therefore, they were not selected for consideration in establishing regulations for these wastewater streams.

Pollutants Detected Below Levels Achievable by Treatment. The toxic pollutants identified by "NT" in Table VI-3 were found above their analytical quantification level only at a concentration below the concentration considered achievable by specific available treatment methods; therefore, they were not selected for consideration in establishing regulations for this wastewater stream. The pollutants are individually discussed below.

Methylene chloride was found in concentrations above both its analytical quantification level and its treatability level in 16 of 34 samples taken. However, since methylene chloride is normally used in the laboratory to extract nonvolatile organics from the sample, and there is no process or material in the waste stream to which the pollutant may be attributed, the sample was assumed to have been contaminated. Methylene chloride is not expected to be present in raw wastewaters at concentrations above the level considered achievable by specific available treatment methods.

Bis(2-ethylhexyl) phthalate was found above its analytical quantification level in 9 of 30 samples. This pollutant is not attributable to specific materials or processes associated with heat treatment press or solution contact cooling operations, and is not expected to be present in raw wastewaters at concentrations above the level considered achievable by specific available treatment methods (0.010 mg/l).

Arsenic was detected above its analytical quantification level in 16 of 43 samples; however, it was not found above the level considered achievable by specific treatment methods (0.34 mg/l).

Cadmium was detected above its analytical quantification level in 14 of 42 samples; however, it was not found above the level considered achievable by specific treatment methods (0.049 mg/l).

Copper was detected above its analytical quantification level in 38 of 42 samples; however, it was not found above the level considered achievable by specific treatment methods (0.39 mg/l).

Mercury was detected above its analytical quantification level in 16 of 42 samples; however, it was not found above the level considered achievable by specific treatment methods (0.036 mg/l).

Nickel was detected above its analytical quantification level in 18 of 42 samples; however, it was not found above the level considered achievable by specific treatment methods (0.22 mg/l).

Pollutants Detected in a Small Number of Sources. The toxic pollutants identified by "SU" in Table VI-3 were found above their analytical quantification level at only a small number of sources within the category and are uniquely related to only those sources; therefore, they were not selected for consideration in establishing regulations for this wastewater stream. The pollutants are individually discussed below.

Acenaphthene was detected above its analytical quantification level in 2 of 28 samples and in 2 of 18 sources.

Benzene was detected above its analytical quantification level in 3 of 34 samples; however, it was only found above the level considered achievable by specific treatment methods (0.05 to 0.100 mg/l) in 1 of 34 samples and in 1 of 17 sources.

1,1,1-Trichloroethane was detected above its analytical quantification level in 1 of 34 samples; however, it was only found above the level considered achievable by specific treatment methods (0.022 mg/l) in 1 of 34 samples and in 1 of 17 sources.

Chloroform was detected above its analytical quantification level in 10 of 34 samples; however, it was only found above the level considered achievable by specific treatment methods (0.1 mg/l) in 1 of 34 samples and in 1 of 14 sources.

2-Chlorophenol was detected above its analytical quantification level in 1 of 28 samples and in 1 of 18 sources.

1,2-trans-Dichloroethylene was detected above its analytical quantification level in 1 of 34 samples and in 1 of 17 sources.

Bromoform was detected above its analytical quantification level in 1 of 34 samples and in 1 of 17 sources.

4-Nitrophenol was detected above its analytical quantification level in 1 of 28 samples and in 1 of 18 sources.

Phenol was detected above its analytical quantification level in 3 of 28 samples; however, it was only found above the level considered achievable by specific treatment methods (0.05 mg/l) in 1 of 28 samples and in 1 of 18 sources.

Butyl benzyl phthalate was detected above its analytical quantification level in 3 of 28 samples and in 1 of 18 sources.

Di-n-butyl phthalate was detected above its analytical quantification level in 6 of 28 samples; however, and was only found above the level considered achievable by specific treatment methods (0.025 mg/l) in 1 of 28 samples and in 1 of 18 sources.

Di-n-octyl phthalate was detected above its analytical quantification level in 1 of 28 samples and in 1 of 18 sources.

Diethyl phthalate was detected above its analytical quantification level in 2 of 28 samples and in 2 of 18 sources.

Dimethyl phthalate was detected above its analytical quantification level in 2 of 28 samples and in 2 of 18 sources.

Tetrachloroethylene was detected above its analytical quantification level in 2 of 34 samples and in 2 of 17 sources.

Toluene was detected above its analytical quantification level in 4 of 34 samples; however, it was only found above the level considered achievable by specific treatment methods (0.05 mg/l) in 1 of 34 samples and in 1 of 17 sources.

Alpha-endosulfan was detected above its analytical quantification level in 1 of 24 samples and in 1 of 18 sources.

Beta-endosulfan was detected above its analytical quantification level in 1 of 24 samples and in 1 of 18 sources.

Endosulfan sulfate was detected above its analytical quantification level in 1 of 24 samples and in 1 of 18 sources.

Endrin was detected above its analytical quantification level in 1 of 24 samples and in 1 of 18 sources.

Endrin aldehyde was detected above its analytical quantification level in 1 of 24 samples and in 1 of 18 sources.

Heptachlor was detected above its analytical quantification level in 1 of 24 samples and in 1 of 18 sources.

Heptachlor epoxide was detected above its analytical quantification level in 2 of 24 samples and in 2 of 18 sources.

Selenium was detected above its analytical quantification level in 7 of 36 samples and was found above the level considered achievable by specific treatment methods (0.20 mg/l) in 1 of 36 samples.

Silver was detected above its analytical quantification level in 6 of 36 samples; however, it was only found above the level considered achievable by specific treatment methods (0.07 mg/l) in 1 of 36 samples and in 1 of 20 sources.

Zinc was detected above its analytical quantification level in 31 of 42 samples; however, it was only found above the level considered achievable by specific treatment methods (0.23 mg/l) in 3 of 42 samples and in 2 of 24 sources.

Pollutants Selected for Consideration in Establishing Regulations for the Solution and Press Heat Treatment Contact Cooling Water Waste Stream. The toxic pollutants identified by "RG" in Table VI-3 are those not eliminated from consideration for any of the reasons listed above; therefore, each was selected for consideration in establishing regulations for this wastewater stream. The pollutants are individually discussed below.

Chromium was detected above its analytical quantification level in 35 of 42 samples and was found above the level considered achievable by specific treatment methods (0.07 mg/l) in 5 of 42 samples and 4 of 24 sources.

Cyanide was detected above its analytical quantification level in 32 of 43 samples and was found above the level considered achievable by specific treatment methods (0.047 mg/l) in 9 of 43 samples.

Lead was detected above its analytical quantification level in 29 of 42 samples and was found above the level considered achievable by specific treatment methods (0.08 mg/l) in 5 of 42 samples.

Cleaning or Etching Bath

Pollutants Never Detected. The toxic pollutants identified by "ND" in Table VI-3 were not detected in any samples from this wastewater stream; therefore, they were not selected for consideration in establishing regulations for this wastewater stream.

Pollutants Never Found Above Their Analytical Quantification Level. The toxic pollutants identified by "NQ" in Table VI-3 were never found above their analytical quantification level in any samples from this wastewater stream; therefore, they were not selected for consideration in establishing regulations for this wastewater stream.

Pollutants Detected Below Levels Achievable by Treatment. The toxic pollutants identified by "NT" in Table VI-3 were found above their analytical quantification level only at a concentration below the concentration considered achievable by specific available treatment methods; therefore, they were not selected for consideration in establishing regulations for this wastewater stream. The pollutants are individually discussed below.

P-Chloro-m-cresol was reported present above it analytical quantification level in one of six samples. The observed value, 0.021 mg/l, is less than that of 0.05 mg/l, which is considered achievable by specific available treatment methods.

Chloroform was reported present above its analytical quantification level in one of four samples. The observed value of 0.020 mg/l is less than the concentration of 0.1 mg/l, which is considered achievable by specific available treatment methods.

2,4-Dimethylphenol was reported present above its analytical quantification level in one of six samples. The observed value was 0.034 mg/l; the level considered achievable by specific treatment methods is 0.05 mg/l.

Methylene chloride was reported present above its analytical quantification level in three of four samples. The reported concentrations were 0.015, 0.062, and 0.039 mg/l; the level considered achievable by treatment is 0.1 mg/l.

Phenol was reported present above its analytical quantification level in three of six samples. The maximum value reported was

0.035 mg/l; the level considered achievable by specific available treatment is 0.05 mg/l.

Dimethyl phthalate was reported present above its analytical quantification level in only one of six samples. The reported concentration was 0.013 mg/l, whereas the concentration considered attainable by specific available treatment methods is 0.025 mg/l.

Beryllium was reported present above its analytical quantification level in 1 of 19 samples. The maximum value reported was 0.105 mg/l; the level considered achievable by specific available treatment is 0.34 mg/l.

Mercury was reported present above its analytical quantification level in 6 of 19 samples. The maximum value reported was 0.020 mg/l, whereas a concentration of 0.036 mg/l is considered achievable by specific treatment methods.

Selenium was detected above its analytical quantification level in 4 of 22 samples; however, it was not found above the level considered achievable by specific treatment methods (0.20 mg/l).

Silver was detected above its analytical quantification level in 5 of 16 samples; however, it was not found above the level considered achievable by specific treatment methods (0.07 mg/l).

Pollutants Detected in a Small Number of Sources. The toxic pollutants identified by "SU" in Table VI-3 were found above their analytical quantification level at only a small number of sources within the category and are uniquely related to only those sources; therefore, they were not selected for consideration in establishing regulations for this wastewater stream. The pollutants are individually discussed below.

Fluoranthene was reported above its analytical quantification level in one of six samples and in one of six sources.

2,4-Dinitrophenol was reported present in two of six samples and in two of six sources.

Pentachlorophenol was reported present above its analytical quantification level in one of six samples and in one of six sources. The observed value was 0.012 mg/l; the value considered achievable by treatment is 0.010 mg/l.

Di-n-butyl phthalate was reported present above its analytical quantification level in two of six samples in two of six sources; however, both of these sources were taken from the same plant.

Di-n-octyl phthalate was reported present above its analytical quantification level in one of six samples and in one of six sources.

Diethyl phthalate was reported present above its analytical quantification level in one of six samples and in one of six sources.

Endrin aldehyde was reported present above its analytical quantification level in one of six samples and in one of six sources.

Antimony was detected above its analytical quantification level in 8 of 20 samples; however, it was only found above the level considered achievable by specific treatment methods (0.47 mg/l) in 1 of 20 samples and in 1 of 15 sources.

Arsenic was detected above its analytical quantification level in 15 of 20 samples. It was found above the level considered achievable by specific treatment methods (0.34 mg/l) in 7 of 20 samples and in 4 of 15 sources. The detections above the treatable level occurred at only 2 of 6 plants sampled.

Pollutants Selected for Consideration in Establishing Regulations for the Cleaning or Etching Bath Waste Stream. The toxic pollutants identified by "RG" in Table VI-3 are those not eliminated from consideration for any of the reasons listed above; therefore, each was selected for consideration in establishing regulations for this wastewater stream. The pollutants are individually discussed below.

Bis(2-ethylhexyl) phthalate was reported above its analytical quantification level in 3 of 6 samples. These three values were also above the level attainable by specific treatment methods (0.01 mg/l).

Cadmium was detected above its analytical quantification level in 3 of 19 samples and was found above the level considered achievable by specific treatment methods (0.049 mg/l) in 2 of 19 samples.

Chromium was reported above its analytical quantification level in 14 of 19 samples. Twelve of the 19 samples were above the level of 0.07 mg/l, which is considered achievable by specific available treatment methods.

Copper was reported present above its analytical quantification level in 14 of 19 samples. The maximum concentration observed was approximately 20 mg/l. The level of copper considered achievable by specific available treatment methods is 0.39 mg/l. Copper concentrations were above the treatable level in 8 of 19 samples.

Cyanide was reported present above its analytical quantification level in 7 of 22 samples. Five of the values were above the level of cyanide considered achievable by specific available treatment methods (0.047 mg/l).

Lead was reported present above its analytical quantification level in 7 of 19 samples collected. The maximum reported lead concentration was 90.0 mg/l. A lead concentration of 0.08 mg/l is considered achievable by specific available treatment methods. Lead concentrations exceeded 0.08 mg/l in 7 of 19 samples.

Nickel was reported present above its analytical quantification level in 13 of 19 samples collected. A nickel concentration of 0.22 mg/l is considered achievable by specific available treatment methods. Nickel concentrations exceeded 0.22 mg/l in 7 of 19 samples.

Zinc was reported present above its analytical quantification level in 17 of 19 samples collected. The concentration of zinc considered achievable by specific available treatment methods is 0.23 mg/l. Zinc concentrations exceeded 0.23 mg/l in 11 of 19 samples.

Cleaning or Etching Rinse

Pollutants Never Detected. The toxic pollutants identified by "ND" in Table VI-3 were not detected in any samples from this wastewater stream; therefore, they were not selected for consideration in establishing regulations for this wastewater stream.

Pollutants Never Found Above Their Analytical Quantification Level. The toxic pollutants identified by "NQ" in Table VI-3 were never found above their analytical quantification level in any samples from this wastewater stream; therefore, they were not selected for consideration in establishing regulations for this wastewater stream.

Pollutants Detected Below Levels Achievable By Treatment. The toxic pollutants identified by "NT" in Table VI-3 were found above their analytical quantification level only at a concentration below the concentration considered achievable by specific available treatment methods; therefore, they were not selected for consideration in establishing regulations for this wastewater stream. The pollutants are individually discussed below.

Benzene was found above its analytical quantification level in 6 of 42 samples. The maximum concentration observed was 0.043 mg/l. The level considered achievable by specific available

treatment methods is 0.05 mg/l; none of the samples was above this level.

Chloroform was found above its analytical quantification level in 24 of 42 samples. The maximum concentration observed was 0.11 mg/l. The level considered achievable by specific available treatment methods is 0.1 mg/l; only one of the samples was above this level.

2,4-Dimethylphenol was found above its analytical quantification level in only 1 of 36 samples. The concentration observed was 0.019 mg/l. The level considered achievable by specific available treatment methods is 0.05 mg/l; the detected value was not above this level.

Methylene chloride was measured above its analytical level in 22 of 42 samples. The maximum concentration observed was 6.1 mg/l. Methylene chloride was also measured above its analytical quantification level in most of the volatiles blank samples, the highest concentration observed being 20.6 mg/l. These observations indicated the probability that either the samples were contaminated, or that the source water was the major source of methylene chloride, or both. Methylene chloride is not expected to be present in raw wastewaters at concentrations above the level considered achievable by specific available treatment methods (0.100 mg/l).

Chlorodibromomethane was found above its analytical quantification level in 2 of 42 samples. The maximum concentration observed was 0.02 mg/l. This is below the concentration considered achievable with available treatment methods (0.1 mg/l).

Diethyl phthalate was found above its analytical quantification level in 3 of 36 samples. The maximum concentration observed was 0.022 mg/l. The level considered achievable by specific available treatment methods is 0.025 mg/l; none of the samples were above this level. In addition, this pollutant is a plasticizer found in many plastic products used in manufacturing plants and is not considered to be attributable to specific materials or processing in the cleaning or etching rinse operation.

Cyanide was measured above its analytical quantification level in 20 of 62 samples. The maximum concentration observed was 0.042 mg/l. None of the samples exceeded the concentration considered achievable with available treatment technologies (0.047 mg/l).

Mercury was found above its analytical quantification level in 17 of 58 samples. The maximum concentration observed was 0.021 mg/l. The level considered achievable by specific available treatment methods is 0.036 mg/l.

Selenium was detected above its analytical quantification level in 1 of 39 samples; however, it was not found above the level considered achievable by specific treatment methods (0.20 mg/l).

Silver was detected above its analytical quantification level in 4 of 39 samples; however, it was not found above the level considered achievable by specific treatment methods (0.07 mg/l).

Pollutants Detected In A Small Number of Sources. The toxic pollutants identified by "SU" in Table VI-2 were found above their analytical quantification level at only a small number of sources within the category and are uniquely related to only those sources; therefore, they were not selected for consideration in establishing regulations for this wastewater stream. The pollutants are individually discussed below.

Acenaphthene was found above its analytical quantification level in 1 of 36 samples and in 1 of 20 sources. The concentration observed was 0.017 mg/l. The level considered achievable by specific available treatment methods is 0.01 mg/l.

1,2-trans-Dichloroethylene was found above its analytical quantification level in only 1 of 42 samples and 1 of 20 sources. The only measurable concentration observed was 0.11 mg/l. The level considered achievable by specific available treatment methods is 0.1 mg/l.

Isophorone was found above its analytical quantification level in 1 of 36 samples in only 1 of 20 sources.

Naphthalene was measured above its analytical quantification level in only 1 of 36 samples and in 1 of 20 sources. The concentration observed was equal to the treatability level (0.05 mg/l).

Phenol was found above its analytical quantification level in 2 of 36 samples. The maximum concentration observed was 0.063 mg/l. The level considered achievable by specific available treatment methods is 0.05 mg/l; only one of the observed values was above this level.

Butyl benzyl phthalate was found above its analytical quantification level in 1 of 36 samples and in 1 of 20 sources. The only measurable concentration observed was 0.066 mg/l. The level considered achievable by specific available treatment methods is 0.01 mg/l; only one sample is above that level.

Di-n-butyl phthalate was found above its analytical quantification level in 2 of 36 samples and in only 2 of 20 sources and in 2 of 11 plants.

Di-n-octyl phthalate was measured above its analytical quantification level in 2 of 36 samples and in only 2 of 20 sources and in 2 of 11 plants.

PCB-1242, PCB-1254, and PCB-1221 were measured above their analytical quantification level in only 1 of 27 samples and in 1 of 19 sources. The concentration of ths sample was 0.016 mg/l.

PCB-1232, PCB-1248, PCB-1260, and PCB-1016 were measured above their analytical quantification level in only 1 of 27 samples and in 1 of 19 sources. The concentration measured was 0.02 mg/l.

Arsenic was found above its analytical quantification level in 32 of 60 samples; however, it was only found above the level considered achievable by specific treatment methods (0.34 mg/l) in 5 of 60 samples and in 3 of 30 sources. These three sources are from only 1 of 15 plants which were sampled for this waste stream.

Beryllium was found above its analytical quantification level in 7 of 58 samples and in 4 of 26 sources. The maximum concentration observed was 0.200 mg/l. The level considered achievable by specific available treatment methods is 0.20 mg/l.

Cadmium was measured above its analytical quantification level in 16 of 58 samples and in 10 of 29 sources. The highest concentration observed was 0.2 mg/l. Of the 58 samples, only one sample exceeded a cadmium concentration of 0.049 mg/l, which is considered achievable by specific available treatment methods.

<u>Pollutants Selected For Consideration In Establishing Regulations For The Cleaning Or Etching Rinse Waste Stream</u>. The toxic pollutants identified by "RG" in Table VI-3 are those not eliminated from consideration for any of the reasons listed above; therefore, each was selected for consideration in establishing regulations for this wastewater stream. The pollutants are individually discussed below.

Bis(2-ethylhexyl) phthalate was reported above its analytical quantification level in 8 of 36 samples and 6 of 20 sources. It was also above the level attainable by specific treatment methods (0.01 mg/l).

Chromium was measured above its analytical quantification level in 42 of 58 samples and 22 of 29 sources. The highest concentration observed was 280 mg/l. Of the 58 samples, 30 samples contained chromium in excess of 0.07 mg/l, which is considered achievable by specific available treatment methods.

Copper was measured above its analytical quantification level in 46 of 58 samples collected. The highest concentration observed

was 480 mg/l. The concentration of copper in 16 samples exceeded 0.39 mg/l, which is considered achievable by specific available treatment methods.

Lead was measured above its analytical quantification level in 29 of 58 samples. The highest concentration observed was 11 mg/l. The concentration of lead in 18 samples exceeded 0.08 mg/l, which is considered achievable by specific available treatment methods.

Nickel was measured above its analytical quantification level in 17 of 58 samples collected. The highest concentration observed was 160 mg/l. The concentration of nickel in 6 samples exceeded 0.22 mg/l, which is considered achievable by specific available treatment methods.

Zinc was measured above its analytical quantification level in 43 of 58 samples. The highest concentration observed was 410 mg/l. The concentration of zinc in 19 samples exceeded 0.23 mg/l, which is considered achievable by specific available treatment methods.

Cleaning or Etching Scrubber Liquor

Pollutants Never Detected. The toxic pollutants identified by "ND" in Table VI-3 were not detected in any samples from this wastewater stream; therefore, they were not selected for consideration in establishing regulations for this wastewater stream.

Pollutants Never Found Above Their Analytical Quantification Level. The toxic pollutants identified by "NQ" in Table VI-3 were never found above their analytical quantification level in any samples from this wastewater stream; therefore, they were not selected for consideration in establishing regulations for this wastewater stream.

Pollutants Detected Below Levels Achievable By Treatment. The toxic pollutants identified by "NT" in Table VI-3 were found above their analytical quantification level only at a concentration below the concentration considered achievable by specific available treatment methods; therefore, they were not selected for consideration in establishing regulations for this wastewater stream. The pollutants are individually discussed below.

Methylene chloride was reported present at 0.014 mg/l in the single sample collected.

Copper was measured at a concentration of 0.010 mg/l in the single sample collected. The observed copper concentration is less

than the copper concentration considered achievable by specific available treatment methods (0.39 mg/l).

Mercury was reported at a concentration of 0.0003 mg/l in the one sample collected. The observed wastewater mercury concentration is less than the concentration considered achievable by specific available treatment methods (0.036 mg/l).

Pollutants Selected for Consideration in Establishing Regulations for the Cleaning or Etching Scrubber Liquor Waste Stream. No pollutants were selected for consideration in establishing regulations for this wastewater stream.

Degassing Scrubber Liquor

Pollutants Never Detected. The toxic pollutants identified by "ND" in Table VI-3 were not detected in any samples from this wastewater stream; therefore, they were not selected for consideration in establishing regulations for this wastewater stream.

Pollutants Never Found Above Their Analytical Quantification Level. The toxic pollutants identified by "NQ" in Table VI-3 were never found above their analytical quantification level in any samples from this wastewater stream; therefore, they were not selected for consideration in establishing regulations.

Pollutants Detected Below Levels Achievable By Treatment. The toxic pollutants identified by "NT" in Table VI-3 were found above their analytical quantification level only at a concentration below the concentration considered achievable by specific available treatment methods; therefore, they were not selected for consideration in establishing regulations for this wastewater stream. The pollutants are individually discussed below.

Chloroform was found above its analytical quantification level in one of three samples; the measured concentration was 0.020 mg/l. The observed value is below the level of 0.1 mg/l that is considered achievable by specific available treatment methods.

Cadmium was found above its analytical quantification level in all three samples. The maximum measured value was 0.011 mg/l, which is below the level of 0.049 mg/l that is considered achievable by specific available treatment methods.

Chromium was measured above its analytical quantification level in all three samples. The maximum concentration was 0.09 mg/l. The level considered achievable by specific available treatment

methods is 0.07 mg/l; only one of the samples was above that level.

Copper was found above its analytical quantification level in all three samples. The maximum measured value was 0.250 mg/l, which is below the level of 0.39 mg/l that is considered achievable by specific available treatment methods.

Nickel was found above its analytical quantification level in two of three samples. The maximum measured value was 0.023 mg/l, which is below the level of 0.22 mg/l that is considered achievable by specific available treatment methods.

Pollutants Selected For Consideration In Establishing Regulations For The Degassing Scrubber Liquor Waste Stream. The toxic pollutants identified by "RG" in Table VI-3 are those not eliminated from consideration for any of the reasons listed above; therefore, each was selected for consideration in establishing regulations for this wastewater stream. The pollutants are individually discussed below.

Lead was measured above its analytical quantification level in all three samples; the observed concentrations were 0.019, 0.09 and 0.45 mg/l. The level considered achievable by specific available treatment methods for lead is 0.08 mg/l.

Zinc was measured at concentrations above its analytical quantification level in all three samples collected from this wastewater stream. The concentrations of zinc observed were 0.13, 0.22, and 1.3 mg/l. A level of zinc of 0.23 mg/l is considered achievable by specific available treatment methods.

Extrusion Press Hydraulic Fluid Leakage

Pollutants Never Detected. The toxic pollutants identified by "ND" in Table VI-3 were not detected in any samples from this wastewater stream; therefore, they were not selected for consideration in establishing regulations for this wastewater stream.

Pollutants Never Found Above Their Analytical Quantification Level. The toxic pollutants identified by "NQ" in Table VI-3 were never found above their analytical quantification level in any samples from this wastewater stream; therefore, they were not selected for consideration in establishing regulations for this wastewater stream.

Pollutants Detected Below Levels Achievable by Treatment. The toxic pollutants identified by "NT" in Table VI-3 were found above their analytical quantification level only at a

concentration below the concentration considered achievable by specific treatment methods; therefore, they were not selected for consideration in establishing regulations for this wastewater stream. The pollutants are individually discussed below.

Methylene chloride was detected above its analytical quantification level in 5 of 6 samples; however, it was not found above the level considered achievable by specific treatment methods (0.1 mg/l).

Zinc was detected above its analytical quantification level in 5 of 6 samples; however, it was not found above the level considered achievable by specific treatment methods (0.23 mg/l).

Pollutants Detected in a Small Number of Sources. The toxic pollutants identified by "SU" in Table VI-3 were found above their analytical quantification level at only a small number of sources within the category and are uniquely related to only those sources; therefore, they were not selected for consideration in establishing regulations for this wastewater stream. The pollutants are individually discussed below.

1,1,1-Trichloroethane was detected above its analytical quantification level in 1 of 6 samples and in 1 of 2 sources.

P-Chloro-m-cresol was detected above its analytical quantification level in 1 of 6 samples and in 1 of 2 sources.

Di-n-butyl phthalate was detected above its analytical quantification level in 1 of 6 samples, and it was found above the level considered achievable by specific treatment methods (0.025 mg/l) in 1 of 6 samples and in 1 of 2 sources.

Chrysene was detected above its analytical quantification level in 1 of 6 samples and in 1 of 2 sources.

Phenanthrene was detected above its analytical quantification level in 1 of 6 samples and in 1 of 2 sources.

Pollutants Selected for Consideration in Establishing Regulations for the Extrusion Press Hydraulic Fluid Leakage Waste Stream. The toxic pollutants identified by "RG" in Table VI-3 are those not eliminated from consideration for any of the reasons listed above; therefore, each was selected for consideration in establishing regulations for this wastewater stream. The pollutants are individually discussed below.

Phenol was detected above its analytical quantification level in 5 of 6 samples and above the level considered achievable by

specific treatment methods (0.05 mg/l) in 5 of 6 samples and in 2 of 2 sources.

The three organic toxic pollutant PCB's (polychlorinated biphenyls) designated as PCB-1248 were detected above their analytical quantification level in 3 of 6 samples and in 1 of 2 sources.

Copper was detected above its analytical quantification level in 6 of 6 samples and above the level considered achievable by specific treatment methods (0.39 mg/l) in 3 of 6 samples and in 1 of 2 sources.

POLLUTANT SELECTION BY SUBCATEGORY

The Agency has determined that each aluminum forming subcategory will be regulated separately. To assist in the regulatory procedure, sampling data for core and ancillary streams were combined to determine the priority pollutant disposition for each subcategory. This information is presented in Table VI-4 and is identical to that which is presented in the preamble to the final regulation.

Table VI-1

LIST OF 129 TOXIC POLLUTANTS

Compound Name

1. acenaphthene
2. acrolein
3. acrylonitrile
4. benzene
5. benzidene
6. carbon tetrachloride (tetrachloromethane)

Chlorinated benzenes (other than dichlorobenzenes)

7. chlorobenzene
8. 1,2,4-trichlorobenzene
9. hexachlorobenzene

Chlorinated ethanes (including 1,2-dichloroethane, 1,1,1-trichloroethane and hexachloroethane)

10. 1,2-dichloroethane
11. 1,1,1-trichloroethane
12. hexachloroethane
13. 1,1-dichloroethane
14. 1,1,2-trichloroethane
15. 1,1,2,2-tetrachloroethane
16. chloroethane

Chloroalkyl ethers (chloromethyl, chloroethyl and mixed ethers)

17. bis (chloromethyl) ether
18. bis (2-chloroethyl) ether
19. 2-chloroethyl vinyl ether (mixed)

Chlorinated naphthalene

20. 2-chloronaphthalene

Table VI-1 (Continued)

LIST OF 129 TOXIC POLLUTANTS

Chlorinated phenols (other than those listed elsewhere; includes trichlorophenols and chlorinated cresols)

21. 2,4,6-trichlorophenol
22. parachlorometa cresol
23. chloroform (trichloromethane)
24. 2-chlorophenol

Dichlorobenzenes

25. 1,2-dichlorobenzene
26. 1,3-dichlorobenzene
27. 1,4-dichlorobenzene

Dichlorobenzidine

28. 3,3'-dichlorobenzidine

Dichloroethylenes (1,1-dichloroethylene and 1,2-dichloroethylene)

29. 1,1-dichloroethylene
30. 1,2-trans-dichloroethylene
31. 2,4-dichlorophenol

Dichloropropane and dichloropropene

32. 1,2-dichloropropane
33. 1,2-dichloropropylene (1,3-dichloropropene)
34. 2,4-dimethylphenol

Dinitrotoluene

35. 2,4-dinitrotoluene
36. 2,6-dinitrotoluene
37. 1,2-diphenylhydrazine
38. ethylbenzene
39. fluoranthene

Table VI-1 (Continued)

LIST OF 129 TOXIC POLLUTANTS

Haloethers (other than those listed elsewhere)

40. 4-chlorophenyl phenyl ether
41. 4-bromophenyl phenyl ether
42. bis(2-chloroisopropyl) ether
43. bis(2-choroethoxy) methane

Halomethanes (other than those listed elsewhere)

44. methylene chloride (dichloromethane)
45. methyl chloride (chloromethane)
46. methyl bromide (bromomethane)
47. bromoform (tribromomethane)
48. dichlorobromomethane
49. trichlorofluoromethane
50. dichlorodifluoromethane
51. chlorodibromomethane
52. hexachlorobutadiene
53. hexachlorocyclopentadiene
54. isophorone
55. naphthalene
56. nitrobenzene

Nitrophenols (including 2,4-dinitrophenol and dinitrocresol)

57. 2-nitrophenol
58. 4-nitrophenol
59. 2,4-dinitrophenol
60. 4,6-dinitro-o-cresol

Nitrosamines

61. N-nitrosodimethylamine
62. N-nitrosodiphenylamine
63. N-nitrosodi-n-propylamine
64. pentachlorophenol
65. phenol

Table VI-1 (Continued)

LIST OF 129 TOXIC POLLUTANTS

Phthalate esters

66. bis(2-ethylhexyl) phthalate
67. butyl benzyl phthalate
68. di-n-butyl phthalate
69. di-n-octyl phthalate
70. diethyl phthalate
71. dimethyl phthalate

Polynuclear aromatic hydrocarbons

72. benzo (a)anthracene (1,2-benzanthracene)
73. benzo (a)pyrene (3,4-benzopyrene)
74. 3,4-benzofluoranthene
75. benzo(k)fluoranthane (11,12-benzofluoranthene)
76. chrysene
77. acenaphthylene
78. anthracene
79. benzo(ghi)perylene (1,11-benzoperylene)
80. fluorene
81. phenanthrene
82. dibenzo (a,h)anthracene (1,2,5,6-dibenzanthracene)
83. indeno (1,2,3-cd)pyrene (w,e,-o-phenylenepyrene)
84. pyrene
85. tetrachloroethylene
86. toluene
87. trichloroethylene
88. vinyl chloride (chloroethylene)

Pesticides and metabolites

89. aldrin
90. dieldrin
91. chlordane (technical mixture and metabolites)

DDT and metabolites

92. 4,4'-DDT
93. 4,4'-DDE(p,p'DDX)
94. 4,4'-DDD(p,p'TDE)

Table VI-1 (Continued)

LIST OF 129 TOXIC POLLUTANTS

Endosulfan and metabolites

95. a-endosulfan-Alpha
96. b-endosulfan-Beta
97. endosulfan sulfate

Endrin and metabolites

98. endrin
99. endrin aldehyde

Heptachlor and metabolies

100. heptachlor
101. heptachlor epoxide

Hexachlorocyclohexane (all isomers)

102. a-BHC-Alpha
103. b-BHC-Beta
104. r-BHC (lindane)-Gamma
105. g-BHC-Delta

Polychlorinated biphenyls (PCB's)

106. PCB-1242 (Arochlor 1242)
107. PCB-1254 (Arochlor 1254)
108. PCB-1221 (Arochlor 1221)
109. PCB-1232 (Arochlor 1232)
110. PCB-1248 (Arochlor 1248)
111. PCB-1260 (Arochlor 1260)
112. PCB-1016 (Arochlor 1016)

Metals and Cyanide, and Asbestos

114. antimony
115. arsenic
116. asbestos (Fibrous)
117. beryllium
118. cadmium
119. chromium (Total)

Table VI-1 (Continued)

LIST OF 129 TOXIC POLLUTANTS

Metals and Cyanide, and Asbestos (Cont.)

120. copper
121. cyanide (Total)
122. lead
123. mercury
124. nickel
125. selenium
126. silver
127. thallium
128. zinc

Other

113. toxaphene
129. 2,3,7,8-tetra chlorodibenzo-p-dioxin (TCDD)

Table VI-2

PRIORITY POLLUTANT DISPOSITION
CORE OPERATIONS

	Pollutant	Rolling With Neat Oils	Rolling With Emulsions	Extrusion	Forging	Drawing With Neat Oils	Drawing With Emulsion
1.	acenaphthene	RG	RG	RG	RG	RG	RG
2.	acrolein	NT *	NT *	NT *	NT *	NT *	NT *
3.	acrylonitrile	ND	ND	ND	ND	ND	ND
4.	benzene	NT *	NT *	NT	NT *	NT *	NT *
5.	benzidene	ND	ND	ND	ND	ND	ND
6.	carbon tetrachloride (tetrachloromethane)	ND	ND	ND	ND	ND	ND
7.	chlorobenzene	NT *	NT *	NT *	NT *	NT *	NT *
8.	1,2,4-trichlorobenzene	ND	ND	ND	ND	ND	ND
9.	hexachlorobenzene	ND	ND	ND	ND	ND	ND
10.	1,2-dichloroethane	ND	ND	ND	ND	ND	ND
11.	1,1,1-trichlorethane	NQ	NQ	NQ	NQ	NQ	NQ
12.	hexachlorethane	ND	ND	ND	ND	ND	ND
13.	1,1-dichloroethane	ND	ND	ND	ND	ND	ND
14.	1,1,2-trichloroethane	ND	ND	ND	ND	ND	ND
15.	1,1,2,2-tetrachloroethane	NQ	NQ	NQ	NQ	NQ	NQ
16.	chloroethane	ND	ND	ND	ND	ND	ND
17.	bis (chloromethyl) ether - deleted	ND	ND	ND	ND	ND	ND
18.	bis (2-chloroethyl) ether	ND	ND	ND	ND	ND	ND
19.	2-chloroethyl vinyl ether (mixed)	ND	ND	ND	ND	ND	ND
20.	2-chloronaphthalene	ND	ND	ND	ND	ND	ND
21.	2,4,6-trichlorophenol	NT *	NT *	NT *	NT *	NT *	NT *
22.	parachlorometa cresol	ND	ND	ND	ND	ND	SU
23.	chloroform (trichloromethane)	NT *	NT *	NT *	NT *	NT *	NT *
24.	2-chlorophenol	ND	ND	ND	ND	ND	SU
25.	1,2-dichlorobenzene	ND	ND	ND	ND	ND	ND
26.	1,3-dichlorobenzene	ND	ND	ND	ND	ND	ND
27.	1,4-dichlorobenzene	ND	ND	ND	ND	ND	ND
28.	3,3'-dichlorobenzidine	ND	ND	ND	ND	ND	ND
29.	1,1-dichloroethylene	ND	ND	ND	ND	ND	ND
30.	1,2-trans-dichloroethylene	SU	SU	SU	SU	SU	SU
31.	2,4-dichlorophenol	ND	ND	ND	ND	ND	ND
32.	1,2-dichloropropane	ND	ND	ND	ND	ND	ND
33.	1,2-dichloropropylene (1,3-dichloropropene)	ND	ND	ND	ND	ND	ND
34.	2,4-dimethylphenol	ND	ND	ND	ND	ND	ND
35.	2,4-dinitrotoluene	ND	ND	ND	ND	ND	ND
36.	2,6-dinitrotoluene	ND	ND	ND	ND	ND	ND
37.	1,2-diphenylhydrazine	ND	ND	ND	ND	ND	ND
38.	ethylbenzene	RG	RG	RG	RG	RG	RG
39.	fluoranthene	RG	RG	RG	RG	RG	RG
40.	4-chlorophenyl phenyl ether	ND	ND	ND	ND	ND	ND
41.	4-bromophenyl phenyl ether	ND	ND	ND	ND	ND	ND
42.	bis(2-chloroisopropyl) ether	ND	ND	ND	ND	ND	ND

* These pollutant parameters could also have been eliminated from further consideration due to presence in a small number of sources (SU).

Table VI-2 (Continued)

PRIORITY POLLUTANT DISPOSITION
CORE OPERATIONS

	Pollutant	Rolling With Neat Oils	Rolling With Emulsions	Extrusion	Forging	Drawing With Neat Oils	Drawing With Emulsion
43.	bis(2-choroethoxy) methane	ND	ND	ND	ND	ND	ND
44.	methylene chloride (dichloromethane)	NT	NT	NT	NT	NT	NT
45.	methyl chloride (chloromethane)	ND	ND	ND	ND	ND	ND
46.	methyl bromide (bromomethane)	ND	ND	ND	ND	ND	ND
47.	bromoform (tribromomethane)	ND	ND	ND	ND	ND	ND
48.	dichlorobromomethane	ND	ND	ND	ND	ND	ND
49.	trichlorofluoromethane - deleted	ND	ND	ND	ND	ND	ND
50.	dichlorodifluoromethane - deleted	ND	ND	ND	ND	ND	ND
51.	chlorodibromomethane	ND	ND	ND	ND	ND	ND
52.	hexachlorobutadiene	ND	ND	ND	ND	ND	ND
53.	hexachlorocyclopentadiene	ND	ND	ND	ND	ND	ND
54.	isophorone	ND	ND	ND	ND	ND	SU
55.	naphthalene	RG	RG	RG	RG	RG	RG
56.	nitrobenzene	ND	ND	ND	ND	ND	ND
57.	2-nitrophenol	ND	ND	ND	ND	ND	ND
58.	4-nitrophenol	ND	ND	ND	ND	ND	ND
59.	2,4-dinitrophenol	ND	ND	ND	ND	ND	ND
60.	4,6-dinitro-o-cresol	ND	ND	ND	ND	ND	ND
61.	N-nitrosodimethylamine	ND	ND	ND	ND	ND	ND
62.	N-nitrosodiphenylamine	RG	RG	RG	RG	RG	RG
63.	N-nitrosodi-n-propylamine	ND	ND	ND	ND	ND	ND
64.	pentachlorophenol	NQ	NQ	NQ	NQ	NQ	NQ
65.	phenol	RG	RG	RG	RG	RG	RG
66.	bis(2-ethylhexyl) phthalate	RG	RG	RG	RG	RG	RG
67.	butyl benzyl phthalate	SU	SU	SU	SU	SU	SU
68.	di-n-butyl phthalate	RG	RG	RG	RG	RG	RG
69.	di-n-octyl phthalate	ND	ND	ND	ND	ND	ND
70.	diethyl phthalate	RG	RG	RG	RG	RG	RG
71.	dimethyl phthalate	SU	SU	SU	SU	SU	SU
72.	benzo(a)anthracene (1,2-benzanthracene)	NQ	NQ	NQ	NQ	NQ	NQ
73.	benzo(a)pyrene (3,4-benzopyrene)	ND	ND	ND	ND	ND	ND
74.	benzo(b)fluoranthene (3,4-benzofluoranthene)	ND	ND	ND	ND	ND	ND
75.	benzo(k)fluoranthene (11,12-benzofluoranthene)	ND	ND	ND	ND	ND	ND
76.	chrysene	SU	SU	SU	SU	SU	SU
77.	acenaphthylene	SU	SU	SU	SU	SU	SU
78.	anthracene	SU (a)	SU (a)	SU (a)	SU (a)	SU (a)	SU (a)
79.	benzo(ghi)perylene (1,11-benzoperylene)	ND	ND	ND	ND	ND	ND
80.	fluorene	RG	RG	RG	RG	RG	RG
81.	phenanthrene	SU (a)	SU (a)	SU (a)	SU (a)	SU (a)	SU (a)
82.	dibenzo (a,h)anthracene (1,2,5,6-di benzanthracene)	ND	ND	ND	ND	ND	ND
83.	indeno (1,2,3-cd)pyrene (w,e,-o-phenylenepyrene)	ND	ND	ND	ND	ND	ND
84.	pyrene	RG	RG	RG	RG	RG	RG
85.	tetrachloroethylene	SU	SU	SU	SU	SU	SU

(a) Reported Together

Table VI-2 (Continued)

PRIORITY POLLUTANT DISPOSITION
CORE OPERATIONS

	Pollutant	Rolling With Neat Oils	Rolling With Emulsions	Extrusion	Forging	Drawing With Neat Oils	Drawing With Emulsion
86.	toluene	RG	RG	RG	RG	RG	RG
87.	trichloroethylene	SU	SU	SU	SU	SU	SU
88.	vinyl chloride (chloroethylene)	ND	ND	ND	ND	ND	ND
89.	aldrin	ND	ND	ND	ND	ND	ND
90.	dieldrin	ND	ND	ND	ND	ND	ND
91.	chlordane (technical mixture and metabolites)	SU	SU	SU	SU	SU	SU
92.	4,4'-DDT	NQ	NQ	NQ	NQ	NQ	NQ
93.	4,4'-DDE(p,p'DDX)	SU	SU	SU	SU	SU	SU
94.	4,4'-DDD(p,p'TDE)	ND	ND	ND	ND	ND	ND
95.	a-endosulfan-Alpha	SU	SU	SU	SU	SU	SU
96.	b-endosulfan-Beta	SU	SU	SU	SU	SU	SU
97.	endosulfan sulfate	RG	RG	RG	RG	RG	RG
98.	endrin	RG	RG	RG	RG	RG	RG
99.	endrin aldehyde	RG	RG	RG	RG	RG	RG
100.	heptachlor	ND	ND	ND	ND	ND	ND
101.	heptachlor epoxide (BHC-hexachlorohexane)	ND	ND	ND	ND	ND	ND
102.	a-BHC-Alpha	SU	SU	SU	SU	SU	SU
103.	b-BHC-Beta	SU	SU	SU	SU	SU	SU
104.	r-BHC (lindane)-Gamma	ND	ND	ND	ND	ND	ND
105.	g-BHC-Delta	ND	ND	ND	ND	ND	ND
106.	PCB-1242 (Arochlor 1242)	RG (b)	RG (b)	RG (b)	RG (b)	RG (b)	RG (b)
107.	PCB-1254 (Arochlor 1254)	RG (b)	RG (b)	RG (b)	RG (b)	RG (b)	RG (b)
108.	PCB-1221 (Arochlor 1221)	RG (b)	RG (b)	RG (b)	RG (b)	RG (b)	RG (b)
109.	PCB-1232 (Arochlor 1232)	RG (c)	RG (c)	RG (c)	RG (c)	RG (c)	RG (c)
110.	PCB-1248 (Arochlor 1248)	RG (c)	RG (c)	RG (c)	RG (c)	RG (c)	RG (c)
111.	PCB-1260 (Arochlor 1260)	RG (c)	RG (c)	RG (c)	RG (c)	RG (c)	RG (c)
112.	PCB-1016 (Arochlor 1016)	RG (c)	RG (c)	RG (c)	RG (c)	RG (c)	RG (c)
113.	toxaphene	ND	ND	ND	ND	ND	ND
114.	antimony	NT	NT	NT	NT	NT	NT
115.	arsenic	SU	SU	SU	SU	SU	SU
116.	asbestos (Fibrous)	ND	ND	ND	ND	ND	ND
117.	beryllium	NQ	NQ	NQ	NQ	NQ	NQ
118.	cadmium	NT	SU	NT	NT	NT	SU
119.	chromium (Total)	RG	RG	RG	RG	RG	RG
120.	copper	RG	RG	RG	RG	RG	RG
121.	cyanide (Total)	NQ	RG	NT	NQ	NQ	RG
122.	lead	RG	RG	RG	RG	RG	RG
123.	mercury	NT	NT	NT	NQ	NQ	NT

Table VI-2 (Continued)

PRIORITY POLLUTANT DISPOSITION
CORE OPERATIONS

	Pollutant	Rolling With Neat Oils	Rolling With Emulsions	Extrusion	Forging	Drawing With Neat Oils	Drawing With Emulsion
124.	nickel	NT	SU	NT	NT	NT	SU
125.	selenium	NQ	NQ	NT	NQ	NQ	NQ
126.	silver	NQ	NQ	NQ	NQ	NQ	NQ
127.	thallium	NQ	NQ	NQ	NQ	NQ	NQ
128.	zinc	RG	RG	RG	RG	RG	RG
129.	2,3,7,8-tetra chlorodibenzo-p-dioxin (TCDD)	ND	ND	ND	ND	ND	ND

(b), (c) Reported Together

Key:
ND - Never Detected
NQ - Never Found Above Their Analytical Quantification
NT - Detected Below Levels Achievable By Treatment
SU - Detected in a Small Number of Sources
RG - Considered For Regulation

Table VI-3

PRIORITY POLLUTANT DISPOSITION
ANCILLARY OPERATIONS

	Pollutant	Extrusion Press Hydraulic Fluid Leakage	Direct Chill Casting Contact Cooling	Continuous Rod Casting Contact Cooling	Continuous Sheet Casting Spent Lubricants	Continuous Rod Casting Spent Lubricants	Forging Scrubber Liquor
1.	acenaphthene	ND	SU	SU	RG	RG	NQ
2.	acrolein	ND	ND	ND	NT *	NT *	ND
3.	acrylonitrile	ND	ND	ND	ND	ND	ND
4.	benzene	ND	NT *	NT *	NT *	NT *	ND
5.	benzidene	ND	ND	ND	ND	ND	ND
6.	carbon tetrachloride (tetrachloromethane)	ND	NQ	NQ	ND	ND	NQ
7.	chlorobenzene	ND	NQ	NQ	NT *	NT *	ND
8.	1,2,4-trichlorobenzene	ND	ND	ND	ND	ND	ND
9.	hexachlorobenzene	ND	ND	ND	ND	ND	ND
10.	1,2-dichloroethane	ND	ND	ND	ND	ND	ND
11.	1,1,1-trichlorethane	SU	NQ	NQ	NQ	NQ	NQ
12.	hexachlorethane	SU	ND	ND	ND	ND	ND
13.	1,1-dichloroethane	SU	ND	ND	ND	ND	ND
14.	1,1,2-trichloroethane	SU	NQ	NQ	ND	ND	ND
15.	1,1,2,2-tetrachloroethane	SU	NQ	NQ	NQ	NQ	ND
16.	chloroethane	SU	ND	ND	ND	ND	ND
17.	bis (chloromethyl) ether - deleted	ND	ND	ND	ND	ND	ND
18.	bis (2-chloroethyl) ether	ND	ND	ND	ND	ND	ND
19.	2-chloroethyl vinyl ether (mixed)	ND	ND	ND	ND	ND	ND
20.	2-chloronaphthalene	ND	ND	ND	ND	ND	ND
21.	2,4,6-trichlorophenol	ND	NQ	NQ	NT *	NT *	ND
22.	parachlorometa cresol	SU	NQ	NQ	ND	ND	ND
23.	chloroform (trichloromethane)	SU	SU	SU	NT *	NT *	NQ
24.	2-chlorophenol	SU	NT *	NT *	ND	ND	ND
25.	1,2-dichlorobenzene	SU	ND	ND	ND	ND	ND
26.	1,3-dichlorobenzene	SU	ND	ND	ND	ND	ND
27.	1,4-dichlorobenzene	SU	ND	ND	ND	ND	ND
28.	3,3'-dichlorobenzidine	SU	ND	ND	ND	ND	ND
29.	1,1-dichloroethylene	ND	ND	ND	ND	ND	ND
30.	1,2-trans-dichloroethylene	ND	ND	ND	SU	SU	ND
31.	2,4-dichlorophenol	ND	NQ	NQ	ND	ND	ND
32.	1,2-dichloropropane	ND	ND	ND	ND	ND	ND
33.	1,2-dichloropropylene (1,3-dichloropropene)	ND	ND	ND	ND	ND	ND
34.	2,4-dimethylphenol	ND	NQ	NQ	ND	ND	NQ
35.	2,4-dinitrotoluene	ND	ND	ND	ND	ND	ND
36.	2,6-dinitrotoluene	ND	ND	ND	ND	ND	ND
37.	1,2-diphenylhydrazine	NQ	ND	ND	ND	ND	ND
38.	ethylbenzene	NQ	ND	ND	RG	RG	ND
39.	fluoranthene	NQ	NQ	NQ	RG	RG	RG
40.	4-chlorophenyl phenyl ether	ND	ND	ND	ND	ND	ND
41.	4-bromophenyl phenyl ether	ND	ND	ND	ND	ND	ND
42.	bis(2-chloroisopropyl) ether	ND	ND	ND	ND	ND	ND
43.	bis(2-choroethoxy) methane	ND	ND	ND	ND	ND	ND
44.	methylene chloride (dichloromethane)	NT	NT	NT	NT	NT	NT

* These pollutant parameters could also have been eliminated from further consideration due to presence in a small number of sources (SU).

Table VI-3 (Continued)

PRIORITY POLLUTANT DISPOSITION
ANCILLARY OPERATIONS

	Pollutant	Extrusion Press Hydraulic Fluid Leakage	Direct Chill Casting Contact Cooling	Continuous Rod Casting Contact Cooling	Continuous Sheet Casting Spent Lubricants	Continuous Rod Casting Spent Lubricants	Forging Scrubber Liquor
45.	methyl chloride (chloromethane)	NT	ND	ND	ND	ND	ND
46.	methyl bromide (bromomethane)	NT	ND	ND	ND	ND	ND
47.	bromoform (tribromomethane)	NT	ND	ND	ND	ND	ND
48.	dichlorobromomethane	NT	NQ	NQ	ND	ND	ND
49.	trichlorofluoromethane - deleted	NT	ND	ND	ND	ND	ND
50.	dichlorodifluoromethane - deleted	NT	ND	ND	ND	ND	ND
51.	chlorodibromomethane	NT	NQ	NQ	ND	ND	ND
52.	hexachlorobutadiene	NT	ND	ND	ND	ND	ND
53.	hexachlorocyclopentadiene	NT	ND	ND	ND	ND	ND
54.	isophorone	ND	SU	SU	ND	ND	ND
55.	naphthalene	ND	NQ	NQ	RG	RG	NQ
56.	nitrobenzene	ND	ND	ND	ND	ND	ND
57.	2-nitrophenol	ND	NQ	NQ	ND	ND	ND
58.	4-nitrophenol	ND	ND	ND	ND	ND	ND
59.	2,4-dinitrophenol	ND	SU	SU	ND	ND	ND
60.	4,6-dinitro-o-cresol	ND	SU	SU	ND	ND	ND
61.	N-nitrosodimethylamine	ND	ND	ND	ND	ND	ND
62.	N-nitrosodiphenylamine	ND	SU	SU	RG	RG	RG
63.	N-nitrosodi-n-propylamine	ND	ND	ND	ND	ND	ND
64.	pentachlorophenol	ND	NQ	NQ	NQ	NQ	NQ
65.	phenol	RG	SU	SU	RG	RG	NQ
66.	bis(2-ethylhexyl) phthalate	ND	RG	RG	RG	RG	RG
67.	butyl benzyl phthalate	ND	SU	SU	SU	SU	ND
68.	di-n-butyl phthalate	SU	RG	RG	RG	RG	ND
69.	di-n-octyl phthalate	ND	SU	SU	ND	ND	ND
70.	diethyl phthalate	ND	SU	SU	RG	RG	NQ
71.	dimethyl phthalate	ND	SU	SU	SU	SU	ND
72.	benzo(a)anthracene (1,2-benzanthracene)	NQ	NQ	NQ	NQ	NQ	RG
73.	benzo(a)pyrene (3,4-benzopyrene)	ND	ND	ND	ND	ND	ND
74.	benzo(b)fluoranthene (3,4-benzofluoranthene)	ND	ND	ND	ND	ND	ND
75.	benzo(k)fluoranthene (11,12-benzofluoranthene)	ND	ND	ND	ND	ND	ND
76.	chrysene	SU	NQ	NQ	SU	SU	RG
77.	acenaphthylene	ND	SU	SU	SU	SU	ND
78.	anthracene	ND	SU	SU	SU	SU	RG (a)
79.	benzo(ghi)perylene (1,11-benzoperylene)	ND	ND	ND	ND	ND	ND
80.	fluorene	ND	SU	SU	RG	RG	ND
81.	phenanthrene	SU	SU	SU	SU	SU	RG (a)
82.	dibenzo (a,h)anthracene (1,2,5,6-dibenzanthracene)	ND	ND	ND	ND	ND	ND
83.	indeno (1,2,3-cd)pyrene (w,e,-o-phenylenepyrene)	ND	ND	ND	ND	ND	ND

(a) Reported together

Table VI-3 (Continued)

PRIORITY POLLUTANT DISPOSITION
ANCILLARY OPERATIONS

	Pollutant	Extrusion Press Hydraulic Fluid Leakage	Direct Chill Casting Contact Cooling	Continuous Rod Casting Contact Cooling	Continuous Sheet Casting Spent Lubricants	Continuous Rod Casting Spent Lubricants	Forging Scrubber Liquor
84.	pyrene	ND	NQ	NQ	RG	RG	RG
85.	tetrachloroethylene	ND	NQ	NQ	SU	SU	ND
86.	toluene	ND	NQ	NQ	RG	RG	ND
87.	trichloroethylene	ND	NQ	NQ	SU	SU	ND
88.	vinyl chloride (chloroethylene)	ND	ND	ND	ND	ND	ND
89.	aldrin	ND	NQ	NQ	ND	ND	NQ
90.	dieldrin	ND	NQ	NQ	ND	ND	NQ
91.	chlordane (technical mixture and metabolites)	ND	SU	SU	SU	SU	NQ
92.	4,4'-DDT	ND	NQ	NQ	NQ	NQ	NQ
93.	4,4'-DDE(p,p'DDX)	ND	NQ	NQ	SU	SU	NQ
94.	4,4'-DDD(p,p'TDE)	ND	NQ	NQ	ND	ND	NQ
95.	a-endosulfan-Alpha	ND	NQ	NQ	SU	SU	ND
96.	b-endosulfan-Beta	ND	NQ	NQ	SU	SU	ND
97.	endosulfan sulfate	ND	NQ	NQ	RG	RG	NQ
98.	endrin	ND	ND	ND	RG	RG	ND
99.	endrin aldehyde	ND	NQ	NQ	RG	RG	ND
100.	heptachlor	ND	NQ	NQ	ND	ND	ND
101.	heptachlor epoxide (BHC-hexachlorohexane)	ND	NQ	NQ	ND	ND	ND
102.	a-BHC-Alpha	ND	NQ	NQ	SU	SU	ND
103.	b-BHC-Beta	ND	NQ	NQ	SU	SU	NQ
104.	r-BHC (lindane)-Gamma	ND	NQ	NQ	ND	ND	ND
105.	g-BHC-Delta	ND	NQ	NQ	ND	ND	NQ
106.	PCB-1242 (Arochlor 1242)	ND	SU (b)	SU (b)	RG (b)	RG (b)	NQ (b)
107.	PCB-1254 (Arochlor 1254)	ND	SU (b)	SU (b)	RG (b)	RG (b)	NQ (b)
108.	PCB-1221 (Arochlor 1221)	ND	SU (b)	SU (b)	RG (b)	RG (b)	NQ (b)
109.	PCB-1232 (Arochlor 1232)	ND	SU (c)	SU (c)	RG (c)	RG (c)	NQ (c)
110.	PCB-1248 (Arochlor 1248)	RG (c)	SU (c)	SU (c)	RG (c)	RG (c)	NQ (c)
111.	PCB-1260 (Arochlor 1260)	RG (c)	SU (c)	SU (c)	RG (c)	RG (c)	NQ (c)
112.	PCB-1016 (Arochlor 1016)	RG (c)	SU (c)	SU (c)	RG (c)	RG (c)	NQ (c)
113.	toxaphene	ND	ND	ND	ND	ND	ND
114.	antimony	NQ	NQ	NQ	NT	NT	NQ
115.	arsenic	NQ	NQ	NQ	NT	NT	NQ
116.	asbestos (Fibrous)	NQ	ND	ND	ND	ND	ND
117.	beryllium	NQ	NQ	NQ	NQ	NQ	NQ
118.	cadmium	NQ	NT	NT	RG	RG	NQ
119.	chromium (Total)	NQ	SU	SU	RG	RG	NQ
120.	copper	RG	NT	NT	RG	RG	NT
121.	cyanide (Total)	NQ	NQ	NQ	RG	RG	NQ

(b),(c) Reported together

Table VI-3 (Continued)

PRIORITY POLLUTANT DISPOSITION
ANCILLARY OPERATIONS

	Pollutant	Extrusion Press Hydraulic Fluid Leakage	Direct Chill Casting Contact Cooling	Continuous Rod Casting Contact Cooling	Continuous Sheet Casting Spent Lubricants	Continuous Rod Casting Spent Lubricants	Forging Scrubber Liquor
122.	lead	NQ	SU	SU	RG	RG	RG
123.	mercury	NQ	NT	NT	NT	NT	NT
124.	nickel	NQ	NT	NT	SU	SU	NQ
125.	selenium	NQ	NQ	NQ	NQ	NQ	NQ
126.	silver	NQ	NQ	NQ	NQ	NQ	NQ
127.	thallium	NQ	NQ	NQ	NQ	NQ	NQ
128.	zinc	NT	RG	RG	RG	RG	RG
129.	2,3,7,8-tetra chlorodibenzo-p-dioxin (TCDD)	ND	ND	ND	ND	ND	ND

Table VI-3 (Continued)

PRIORITY POLLUTANT DISPOSITION
ANCILLARY OPERATIONS

	Pollutant	Solution and Press Heat Treatment Contact Cooling	Cleaning or Etching Bath	Cleaning or Etching Rinse	Cleaning or Etching Scrubber Liquor	Degassing Scrubber Liquor
1.	acenaphthene	SU	NQ	SU	ND	ND
2.	acrolein	ND	ND	ND	ND	ND
3.	acrylonitrile	ND	ND	ND	ND	ND
4.	benzene	SU	NQ	NT	ND	ND
5.	benzidene	ND	ND	ND	ND	ND
6.	carbon tetrachloride (tetrachloromethane)	NQ	NQ	NQ	ND	ND
7.	chlorobenzene	ND	ND	NQ	ND	ND
8.	1,2,4-trichlorobenzene	ND	ND	ND	ND	ND
9.	hexachlorobenzene	ND	ND	ND	ND	ND
10.	1,2-dichloroethane	ND	ND	NQ	ND	ND
11.	1,1,1-trichlorethane	SU	ND	NQ	ND	NQ
12.	hexachlorethane	ND	ND	ND	ND	ND
13.	1,1-dichloroethane	ND	ND	ND	ND	ND
14.	1,1,2-trichloroethane	NQ	ND	NQ	ND	NQ
15.	1,1,2,2-tetrachloroethane	ND	ND	ND	ND	ND
16.	chloroethane	ND	ND	ND	ND	ND
17.	bis (chloromethyl) ether - deleted	ND	ND	ND	ND	ND
18.	bis (2-chloroethyl) ether	ND	ND	ND	ND	ND
19.	2-chloroethyl vinyl ether (mixed)	ND	ND	ND	ND	ND
20.	2-chloronaphthalene	ND	ND	ND	ND	ND
21.	2,4,6-trichlorophenol	ND	NQ	ND	ND	ND
22.	parachlorometa cresol	ND	NT *	NQ	ND	ND
23.	chloroform (trichloromethane)	SU	NT *	NT	NQ	NT
24.	2-chlorophenol	SU	NQ	NQ	ND	ND
25.	1,2-dichlorobenzene	ND	ND	ND	ND	ND
26.	1,3-dichlorobenzene	ND	ND	ND	ND	ND
27.	1,4-dichlorobenzene	ND	ND	ND	ND	ND
28.	3,3'-dichlorobenzidine	ND	ND	ND	ND	ND
29.	1,1-dichloroethylene	NQ	ND	ND	ND	ND
30.	1,2-trans-dichloroethylene	SU	ND	SU	ND	ND
31.	2,4-dichlorophenol	ND	NQ	NQ	ND	ND
32.	1,2-dichloropropane	ND	ND	ND	ND	ND
33.	1,2-dichloropropylene (1,3-dichloropropene)	ND	ND	ND	ND	ND
34.	2,4-dimethylphenol	NQ	NT *	NT *	ND	ND
35.	2,4-dinitrotoluene	ND	ND	ND	ND	ND
36.	2,6-dinitrotoluene	ND	ND	ND	ND	ND
37.	1,2-diphenylhydrazine	ND	NQ	ND	ND	ND
38.	ethylbenzene	NQ	NQ	NQ	ND	ND
39.	fluoranthene	ND	SU	NQ	ND	ND
40.	4-chlorophenyl phenyl ether	ND	ND	ND	ND	ND
41.	4-bromophenyl phenyl ether	ND	ND	ND	ND	ND
42.	bis(2-chloroisopropyl) ether	ND	ND	ND	ND	ND
43.	bis(2-choroethoxy) methane	ND	ND	ND	ND	ND

* These pollutant parameters could also have been eliminated from further consideration due to presence in a small number of sources (SU).

Table VI-3 (Continued)

PRIORITY POLLUTANT DISPOSITION
ANCILLARY OPERATIONS

	Pollutant	Solution and Press Heat Treatment Contact Cooling	Cleaning or Etching Bath	Cleaning or Etching Rinse	Cleaning or Etching Scrubber Liquor	Degassing Scrubber Liquor
44.	methylene chloride (dichloromethane)	NT	NT	NT	NT	NQ
45.	methyl chloride (chloromethane)	ND	ND	ND	ND	ND
46.	methyl bromide (bromomethane)	ND	ND	ND	ND	ND
47.	bromoform (tribromomethane)	SU	ND	ND	ND	ND
48.	dichlorobromomethane	NQ	ND	NQ	ND	NQ
49.	trichlorofluoromethane - deleted	ND	ND	ND	ND	ND
50.	dichlorodifluoromethane - deleted	ND	ND	ND	ND	ND
51.	chlorodibromomethane	NQ	ND	NT *	ND	NQ
52.	hexachlorobutadiene	ND	ND	ND	ND	ND
53.	hexachlorocyclopentadiene	ND	ND	ND	ND	ND
54.	isophorone	ND	NQ	SU	ND	ND
55.	naphthalene	ND	ND	SU	ND	ND
56.	nitrobenzene	ND	ND	ND	ND	ND
57.	2-nitrophenol	ND	NQ	ND	ND	ND
58.	4-nitrophenol	SU	ND	ND	ND	ND
59.	2,4-dinitrophenol	ND	SU	ND	ND	ND
60.	4,6-dinitro-o-cresol	ND	ND	ND	ND	ND
61.	N-nitrosodimethylamine	ND	ND	ND	ND	ND
62.	N-nitrosodiphenylamine	NQ	NQ	ND	ND	ND
63.	N-nitrosodi-n-propylamine	ND	ND	ND	ND	ND
64.	pentachlorophenol	ND	SU	NQ	ND	ND
65.	phenol	SU	NT	SU	ND	NQ
66.	bis(2-ethylhexyl) phthalate	NT	RG	RG	ND	NQ
67.	butyl benzyl phthalate	SU	NQ	SU	ND	ND
68.	di-n-butyl phthalate	SU	SU	SU	ND	NQ
69.	di-n-octyl phthalate	SU	SU	SU	ND	ND
70.	diethyl phthalate	SU	SU	NT *	ND	ND
71.	dimethyl phthalate	SU	NT *	NQ	ND	ND
72.	benzo(a)anthracene (1,2-benzanthracene)	ND	NQ	ND	ND	ND
73.	benzo(a)pyrene (3,4-benzopyrene)	ND	NQ	ND	ND	ND
74.	benzo(b)fluoranthene (3,4-benzofluoranthene)	ND	ND	ND	ND	ND
75.	benzo(k)fluoranthene (11,12-benzofluoranthene)	ND	ND	ND	ND	ND
76.	chrysene	NQ	NQ	NQ	ND	ND
77.	acenaphthylene	NQ	NQ	NQ	ND	ND
78.	anthracene	NQ (a)	NQ (a)	NQ (a)	ND (a)	ND (a)
79.	benzo(ghi)perylene (1,11-benzoperylene)	ND	ND	ND	ND	ND
80.	fluorene	NQ	NQ	NQ	ND	ND
81.	phenanthrene	NQ (a)	NQ (a)	NQ (a)	ND (a)	ND (a)
82.	dibenzo (a,h)anthracene (1,2,5,6-dibenzanthracene)	ND	ND	ND	ND	ND
83.	indeno (1,2,3-cd)pyrene (w,e,-o-phenylenepyrene)	ND	ND	ND	ND	ND
84.	pyrene	NQ	NQ	NQ	ND	ND
85.	tetrachloroethylene	SU	NQ	NQ	ND	ND
86.	toluene	SU	ND	NQ	ND	ND

(a) Reported together

* These pollutant parameters could also have been eliminated from further consideration due to presence in a small number of sources (SU).

Table VI-3 (Continued)

PRIORITY POLLUTANT DISPOSITION
ANCILLARY OPERATIONS

	Pollutant	Solution and Press Heat Treatment Contact Cooling	Cleaning or Etching Bath	Cleaning or Etching Rinse	Cleaning or Etching Scrubber Liquor	Degassing Scrubber Liquor
87.	trichloroethylene	NQ	ND	NQ	ND	NQ
88.	vinyl chloride (chloroethylene)	ND	ND	ND	ND	ND
89.	aldrin	NQ	ND	NQ	ND	ND
90.	dieldrin	NQ	NQ	NQ	NQ	ND
91.	chlordane (technical mixture and metabolites)	NQ	NQ	NQ	ND	ND
92.	4,4'-DDT	NQ	NQ	NQ	NQ	ND
93.	4,4'-DDE(p,p'DDX)	NQ	NQ	NQ	NQ	ND
94.	4,4'-DDD(p,p'TDE)	NQ	NQ	NQ	NQ	ND
95.	a-endosulfan-Alpha	SU	NQ	NQ	ND	ND
96.	b-endosulfan-Beta	SU	NQ	NQ	NQ	ND
97.	endosulfan sulfate	SU	NQ	NQ	ND	ND
98.	endrin	SU	NQ	NQ	ND	ND
99.	endrin aldehyde	SU	SU	NQ	NQ	ND
100.	heptachlor	SU	NQ	NQ	NQ	ND
101.	heptachlor epoxide (BHC-hexachlorohexane)	SU	NQ	NQ	NQ	ND
102.	a-BHC-Alpha	NQ	NQ	NQ	NQ	ND
103.	b-BHC-Beta	NQ	NQ	NQ	ND	ND
104.	r-BHC (lindane)-Gamma	NQ	NQ	NQ	NQ	ND
105.	g-BHC-Delta (PCB-polychlorinated biphenyls)	NQ	NQ	NQ	ND	ND
106.	PCB-1242 (Arochlor 1242)	NQ (b)	NQ (b)	SU (b)	NQ (b)	ND (b)
107.	PCB-1254 (Arochlor 1254)	NQ (b)	NQ (b)	SU (b)	NQ (b)	ND (b)
108.	PCB-1221 (Arochlor 1221)	NQ (b)	NQ (b)	SU (b)	NQ (b)	ND (b)
109.	PCB-1232 (Arochlor 1232)	NQ (b)	NQ (b)	SU (b)	NQ (b)	ND (b)
110.	PCB-1248 (Arochlor 1248)	NQ (c)	NQ (c)	SU (c)	NQ (c)	ND (c)
111.	PCB-1260 (Arochlor 1260)	NQ (c)	NQ (c)	SU (c)	NQ (c)	ND (c)
112.	PCB-1016 (Arochlor 1016)	NQ (c)	NQ (c)	SU (c)	NQ (c)	ND (c)
113.	toxaphene	ND	ND	ND	ND	ND
114.	antimony	NQ	SU	NQ	NQ	NQ
115.	arsenic	NT	SU	SU	NQ	NQ
116.	asbestos (Fibrous)	ND	ND	ND	ND	ND
117.	beryllium	NQ	NT	SU	NQ	NQ
118.	cadmium	NT	RG	SU	NQ	NT
119.	chromium (Total)	RG	RG	RG	NQ	NT
120.	copper	NT	RG	RG	NT	NT
121.	cyanide (Total)	RG	RG	NT	NQ	NQ
122.	lead	RG	RG	RG	NQ	RG
123.	mercury	NT	NT	NT	NT	NQ
124.	nickel	NT	RG	RG	NQ	NT
125.	selenium	RG	NT	NT	NQ	NQ
126.	silver	SU	NT	NT	NQ	NQ
127.	thallium	NQ	NQ	NQ	NQ	NQ
128.	zinc	SU	RG	RG	NQ	RG
129.	2,3,7,8-tetra chlorodibenzo-p-dioxin (TCDD)	ND	ND	ND	ND	ND

(b),(c) Reported together

Table VI-4

PRIORITY POLLUTANT DISPOSITION
BY SUBCATEGORY

	Pollutant	Rolling With Neat Oils	Rolling With Emulsions	Extrusion	Forging	Drawing With Neat Oils	Drawing With Emulsion
1.	acenaphthene	RG	RG	RG	RG	RG	RG
2.	acrolein	NT *	NT *	NT *	NT *	NT *	NT *
3.	acrylonitrile	ND	ND	ND	ND	ND	ND
4.	benzene	SU	SU	SU	SU	SU	SU
5.	benzidene	ND	ND	ND	ND	ND	ND
6.	carbon tetrachloride (tetrachloromethane)	NQ	NQ	NQ	NQ	NQ	NQ
7.	chlorobenzene	NT *	NT *	NT *	NT *	NT *	NT *
8.	1,2,4-trichlorobenzene	ND	ND	ND	ND	ND	ND
9.	hexachlorobenzene	ND	ND	ND	ND	ND	ND
10.	1,2-dichloroethane	NQ	NQ	NQ	NQ	NQ	NQ
11.	1,1,1-trichlorethane	SU	SU	SU	SU	SU	SU
12.	hexachlorethane	ND	ND	SU	ND	ND	ND
13.	1,1-dichloroethane	ND	ND	SU	ND	ND	ND
14.	1,1,2-trichloroethane	NQ	NQ	SU	NQ	NQ	NQ
15.	1,1,2,2-tetrachloroethane	NQ	NQ	SU	NQ	NQ	NQ
16.	chloroethane	ND	ND	SU	ND	ND	ND
17.	bis (chloromethyl) ether - deleted	ND	ND	ND	ND	ND	ND
18.	bis (2-chloroethyl) ether	ND	ND	ND	ND	ND	ND
19.	2-chloroethyl vinyl ether (mixed)	ND	ND	ND	ND	ND	ND
20.	2-chloronaphthalene	ND	ND	ND	ND	ND	ND
21.	2,4,6-trichlorophenol	NT *	NT *	NT *	NT *	NT *	NT *
22.	parachlorometa cresol	NT *	NT *	SU	NT *	NT *	SU
23.	chloroform (trichloromethane)	SU	SU	SU	SU	SU	SU
24.	2-chlorophenol	SU	SU	SU	SU	SU	SU
25.	1,2-dichlorobenzene	ND	ND	SU	ND	ND	ND
26.	1,3-dichlorobenzene	ND	ND	SU	ND	ND	ND
27.	1,4-dichlorobenzene	ND	ND	SU	ND	ND	ND
28.	3,3'-dichlorobenzidine	ND	ND	SU	ND	ND	ND
29.	1,1-dichloroethylene	NQ	NQ	NQ	NQ	NQ	NQ
30.	1,2-trans-dichloroethylene	SU	SU	SU	SU	SU	SU
31.	2,4-dichlorophenol	NQ	NQ	NQ	NQ	NQ	NQ
32.	1,2-dichloropropane	ND	ND	ND	ND	ND	ND
33.	1,2-dichloropropylene (1,3-dichloropropene)	ND	ND	ND	ND	ND	ND
34.	2,4-dimethylphenol	NT *	NT *	NT *	NT *	NT *	NT *
35.	2,4-dinitrotoluene	ND	ND	ND	ND	ND	SU
36.	2,6-dinitrotoluene	ND	ND	ND	ND	ND	ND
37.	1,2-diphenylhydrazine	NQ	NQ	NQ	NQ	NQ	SU
38.	ethylbenzene	RG	RG	RG	RG	RG	RG
39.	fluoranthene	RG	RG	RG	RG	RG	RG
40.	4-chlorophenyl phenyl ether	ND	ND	ND	ND	ND	ND
41.	4-bromophenyl phenyl ether	ND	ND	ND	ND	ND	ND
42.	bis(2-chloroisopropyl) ether	ND	ND	ND	ND	ND	ND

* These pollutant parameters could also have been eliminated from further consideration due to presence in a small number of sources (SU).

Table VI-4 (Continued)

PRIORITY POLLUTANT DISPOSITION
BY SUBCATEGORY

Pollutant	Rolling With Neat Oils	Rolling With Emulsions	Extrusion	Forging	Drawing With Neat Oils	Drawing With Emulsion
43. bis(2-choroethoxy) methane	ND	ND	ND	ND	ND	ND
44. methylene chloride (dichloromethane)	NT	NT	NT	NT	NT	NT
45. methyl chloride (chloromethane)	ND	ND	NT	ND	ND	ND
46. methyl bromide (bromomethane)	ND	ND	NT	ND	ND	ND
47. bromoform (tribromomethane)	SU	SU	SU	SU	SU	SU
48. dichlorobromomethane	NQ	NQ	NT	NQ	NQ	NQ
49. trichlorofluoromethane - deleted	ND	ND	NT	ND	ND	ND
50. dichlorodifluoromethane - deleted	ND	ND	NT	ND	ND	ND
51. chlorodibromomethane	NT	NT	NT	NT	NT	NT
52. hexachlorobutadiene	ND	ND	NT	ND	ND	ND
53. hexachlorocyclopentadiene	ND	ND	NT	ND	ND	ND
54. isophorone	SU	SU	SU	SU	SU	SU
55. naphthalene	RG	RG	RG	RG	RG	RG
56. nitrobenzene	ND	ND	ND	ND	ND	ND
57. 2-nitrophenol	NQ	NQ	NQ	NQ	NQ	NQ
58. 4-nitrophenol	SU	SU	SU	SU	SU	SU
59. 2,4-dinitrophenol	SU	SU	SU	SU	SU	SU
60. 4,6-dinitro-o-cresol	ND	SU	SU	ND	SU	SU
61. N-nitrosodimethylamine	ND	ND	ND	ND	ND	ND
62. N-nitrosodiphenylamine	RG	RG	RG	RG	RG	RG
63. N-nitrosodi-n-propylamine	ND	ND	ND	ND	ND	ND
64. pentachlorophenol	SU	SU	SU	SU	SU	SU
65. phenol	RG	RG	RG	RG	RG	RG
66. bis(2-ethylhexyl) phthalate	RG	RG	RG	RG	RG	RG
67. butyl benzyl phthalate	SU	SU	SU	SU	SU	SU
68. di-n-butyl phthalate	RG	RG	RG	RG	RG	RG
69. di-n-octyl phthalate	SU	SU	SU	SU	SU	SU
70. diethyl phthalate	RG	RG	RG	RG	RG	RG
71. dimethyl phthalate	SU	SU	SU	SU	SU	SU
72. benzo(a)anthracene (1,2-benzanthracene)	NQ	NQ	NQ	RG	NQ	NQ
73. benzo(a)pyrene (3,4-benzopyrene)	NQ	NQ	NQ	NQ	NQ	NQ
74. benzo(b)fluoranthene (3,4-benzofluoranthene)	ND	ND	ND	ND	ND	ND
75. benzo(k)fluoranthene (11,12-benzofluoranthene)	ND	ND	ND	ND	ND	ND
76. chrysene	SU	SU	SU	RG	SU	SU
77. acenaphthylene	SU	SU	SU	SU	SU	SU
78. anthracene	SU (a)	SU (a)	SU (a)	RG (a)	SU (a)	SU (a)
79. benzo(ghi)perylene (1,11-benzoperylene)	ND	ND	ND	ND	ND	ND
80. fluorene	RG	RG	RG	RG	RG	RG
81. phenanthrene	SU (a)	SU (a)	SU (a)	RG (a)	SU (a)	SU (a)
82. dibenzo (a,h)anthracene (1,2,5,6-di benzanthracene)	ND	ND	ND	ND	ND	ND
83. indeno (1,2,3-cd)pyrene (w,e,-o-phenylenepyrene)	ND	ND	ND	ND	ND	ND
84. pyrene	RG	RG	RG	RG	RG	RG
85. tetrachloroethylene	SU	SU	SU	SU	SU	SU

(a) Reported Together

Table VI-4 (Continued)

PRIORITY POLLUTANT DISPOSITION
BY SUBCATEGORY

	Pollutant	Rolling With Neat Oils	Rolling With Emulsions	Extrusion	Forging	Drawing With Neat Oils	Drawing With Emulsion
86.	toluene	RG	RG	RG	RG	RG	RG
87.	trichloroethylene	SU	SU	SU	SU	SU	SU
88.	vinyl chloride (chloroethylene)	ND	ND	ND	ND	ND	ND
89.	aldrin	NQ	NQ	NQ	NQ	NQ	NQ
90.	dieldrin	NQ	NQ	NQ	NQ	NQ	NQ
91.	chlordane (technical mixture and metabolites)	SU	SU	SU	SU	SU	SU
92.	4,4'-DDT	NQ	NQ	NQ	NQ	NQ	NQ
93.	4,4'-DDE(p,p'DDX)	SU	SU	SU	SU	SU	SU
94.	4,4'-DDD(p,p'TDE)	NQ	NQ	NQ	NQ	NQ	NQ
95.	a-endosulfan-Alpha	SU	SU	SU	SU	SU	SU
96.	b-endosulfan-Beta	SU	SU	SU	SU	SU	SU
97.	endosulfan sulfate	RG	RG	RG	RG	RG	RG
98.	endrin	RG	RG	RG	RG	RG	RG
99.	endrin aldehyde	RG	RG	RG	RG	RG	RG
100.	heptachlor	SU	SU	SU	SU	SU	SU
101.	heptachlor epoxide (BHC-hexachlorohexane)	SU	SU	SU	SU	SU	SU
102.	a-BHC-Alpha	SU	SU	SU	SU	SU	SU
103.	b-BHC-Beta	SU	SU	SU	SU	SU	SU
104.	r-BHC (lindane)-Gamma	NQ	NQ	NQ	NQ	NQ	NQ
105.	g-BHC-Delta	NQ	NQ	NQ	NQ	NQ	NQ
106.	PCB-1242 (Arochlor 1242)	RG (b)	RG (b)	RG (b)	RG (b)	RG (b)	RG (b)
107.	PCB-1254 (Arochlor 1254)	RG (b)	RG (b)	RG (b)	RG (b)	RG (b)	RG (b)
108.	PCB-1221 (Arochlor 1221)	RG (b)	RG (b)	RG (b)	RG (b)	RG (b)	RG (b)
109.	PCB-1232 (Arochlor 1232)	RG (c)	RG (c)	RG (c)	RG (c)	RG (c)	RG (c)
110.	PCB-1248 (Arochlor 1248)	RG (c)	RG (c)	RG (c)	RG (c)	RG (c)	RG (c)
111.	PCB-1260 (Arochlor 1260)	RG (c)	RG (c)	RG (c)	RG (c)	RG (c)	RG (c)
112.	PCB-1016 (Arochlor 1016)	RG (c)	RG (c)	RG (c)	RG (c)	RG (c)	RG (c)
113.	toxaphene	ND	ND	ND	ND	ND	ND
114.	antimony	SU	SU	SU	SU	SU	SU
115.	arsenic	SU	SU	SU	SU	SU	SU
116.	asbestos (Fibrous)	ND	ND	NQ	ND	ND	ND
117.	beryllium	SU	SU	SU	SU	SU	SU
118.	cadmium	RG	RG	RG	RG	RG	RG
119.	chromium (Total)	RG	RG	RG	RG	RG	RG
120.	copper	RG	RG	RG	RG	RG	RG
121.	cyanide (Total)	RG	RG	RG	RG	RG	RG
122.	lead	RG	RG	RG	RG	RG	RG
123.	mercury	NT	NT	NT	NT	NT	NT

Table VI-4 (Continued)

PRIORITY POLLUTANT DISPOSITION
BY SUBCATEGORY

Pollutant	Rolling With Neat Oils	Rolling With Emulsions	Extrusion	Forging	Drawing With Neat Oils	Drawing With Emulsion
124. nickel	RG	RG	RG	RG	RG	RG
125. selenium	RG	RG	RG	RG	RG	RG
126. silver	SU	SU	SU	SU	SU	SU
127. thallium	NQ	NQ	NQ	NQ	NQ	NQ
128. zinc	RG	RG	RG	RG	RG	RG
129. 2,3,7,8-tetra chlorodibenzo-p-dioxin (TCDD)	ND	ND	ND	ND	ND	ND

(b), (c) Reported Together

Key: ND - Never Detected
NQ - Never Found Above Their Analytical Quantification
NT - Detected Below Levels Achievable By Treatment
SU - Detected in a Small Number of Sources
RG - Considered For Regulation