United States
Environmental Protection
Agency

Industrial Technology Division
WH-552
Washington, DC 20460

EPA440.1-85/070
October 1985

Water

EPA

Development Document for Effluent Limitations Guidelines and Standards for the Metal Molding and Casting (Foundries)

Final

Point Source Category

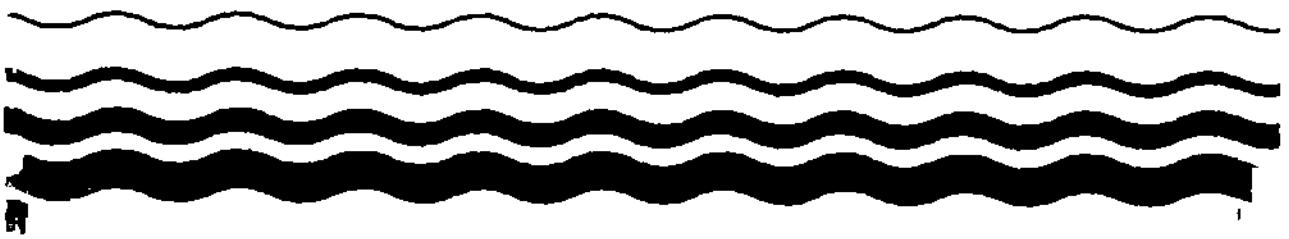

DEVELOPMENT DOCUMENT

FOR

EFFLUENT LIMITATIONS GUIDELINES
NEW SOURCE PERFORMANCE STANDARDS

AND

PRETREATMENT STANDARDS

FOR THE

METAL MOLDING AND CASTING
(FOUNDRIES)
POINT SOURCE CATEGORY

Lee M. Thomas
Administrator

James M. Conlon
Acting Director
Office of Water Regulations and Standards

Jeffery D. Denit, Director
Industrial Technology Division

Robert W. Dellinger
Chief, Consumer Commodities Branch

Donald F. Anderson
Senior Project Officer

October 1985

Industrial Technology Division
Office of Water Regulations and Standards
U.S. Environmental Protection Agency
Washington, D.C. 20460

TABLE OF CONTENTS

SECTION	SUBJECT	PAGE
I.	SUMMARY AND CONCLUSIONS	1
II.	RECOMMENDATIONS	11
III.	INTRODUCTION	
	Legal Authority	41
	Summary of Methodology	43
	Data Gathering Efforts	45
	Description of the Metal Molding and Casting (Foundry) Industry	56
	Description of Metal Molding and Casting Industry Processes	62
	Profile of Plants in the Metal Molding and Casting Point Source Category	75
IV.	INDUSTRY SUBCATEGORIZATION	
	Introduction	93
	Selected Subcategories	93
	Subcategory and Process Segment Definitions	96
	Subcategorization Basis	101
	Production Normalizing Parameters	108
V.	WATER USE AND WASTE CHARACTERIZATION	113
	Data Sources	
	Metal Molding and Casting Industry Data Base	113
	Sampling and Analysis Program	113
	Site Selection Rationale and Sampling History	115
	Water Use and Waste Characteristics	120
	Aluminum Subcategory	121
	Copper Subcategory	129
	Ferrous Subcategory	135
	Magnesium Subcategory	147
	Zinc Subcategory	150
VI.	SELECTION OF POLLUTANTS TO BE CONSIDERED FOR REGULATION	273
	Rationale for Pollutant Selection	273
	Pollutant Selection by Subcategory	274
	Organic Priority Pollutant Selection by Process Segment	275
	Pollutant Selection for the Aluminum Subcategory	276
	Pollutant Selection for the Copper Subcategory	281

TABLE OF CONTENTS (Continued)

SECTION	SUBJECT	PAGE
VI.	Pollutant Selection for the Ferrous Subcategory	284
	Pollutant Selection for the Magnesium Subcategory	287
	Pollutant Selection for the Zinc Subcategory	290
VII.	CONTROL AND TREATMENT TECHNOLOGY	311
	Introduction	311
	End-of-Pipe Treatment Technologies	311
	Major Technologies	312
	Carbon Adsorption	312
	Chemical Precipitation	314
	Emulsion Breaking	318
	Granular Bed Filtration	321
	Oxidation by Potassium Permanganate	324
	Pressure Filtration	326
	Settling	327
	Skimming	330
	Vacuum Filtration	332
	Minor Technologies	333
	Centrifugation	333
	Coalescing	335
	Flotation	336
	Gravity Sludge Thickening	339
	Sludge Bed Drying	340
	Ultrafiltration	341
	In-Process Pollution Control Techniques	343
	Generally Applicable In-Process Control Techniques	343
	Wastewater Segregation	344
	Wastewater Recycle and Reuse	344
	Water Use Reduction	346
	Contract Hauling	347
	Lubricating Oil Recovery	347
	Dry Air Pollution Control Devices	347
	Good Housekeeping	348
	Development of Control and Treatment Options	349
	Development of Treatment Effectiveness Values	352

TABLE OF CONTENTS (Continued)

SECTION	SUBJECT	PAGE
VIII.	COST, ENERGY, AND NON-WATER QUALITY IMPACTS	
	Cost Estimation	409
	Model Plant Costs	410
	Utilization Factors	414
	Projected Number of Dischargers	415
	Calculation of Industry Costs	415
	Segregation Costs	417
	Central Treatment Costs	419
	Pollutant Removal Estimates	420
	Energy and Non-Water Quality Impacts	421
	Energy Requirements	421
	Air Pollution	421
	Solid Waste	421
	Consumptive Water Loss	423
IX.	BEST PRACTICABLE CONTROL TECHNOLOGY CURRENTLY AVAILABLE	457
	Introduction	457
	Technical Approach to BPT	457
	BPT Option Selection	458
	Regulated Pollutant Parameters	459
	BPT Flows	461
	BPT Effluent Limitations	462
	BPT Development by Subcategory and Process Segment	463
	Non-Water Quality Aspects of BPT	480
X.	BEST AVAILABLE TECHNOLOGY ECONOMICALLY ACHIEVABLE	491
	Introduction	491
	Technical Approach to BAT	491
	BAT Option Selection	492
	Regulated Pollutant Parameters	494
	BAT Flows	495
	BAT Effluent Limitations	496
	Cost of Application and Effluent Reduction Benefits	496
	Non-Water Quality Aspects of BAT	496
XI.	BEST CONVENTIONAL POLLUTANT CONTROL TECHNOLOGY	507

TABLE OF CONTENTS (Continued)

SECTION	SUBJECT	PAGE
XII.	NEW SOURCE PERFORMANCE STANDARDS	509
	Introduction	509
	Technical Approach to Establishing NSPS	509
	NSPS Technology Option Selection	510
	Regulated Pollutant Parameters	510
	NSPS Flow	510
	NSPS Effluent Standards	510
	Cost of Application and Effluent Reductions Benefits	511
	Non-Water Quality Aspects of NSPS	511
XIII.	PRETREATMENT STANDARDS	523
	Introduction	523
	Technical Approach to Establishing Pretreatment Standards	523
	Pass Through Analysis	524
	PSES and PSNS Option Selection	527
	Regulated Pollutant Parameters	527
	PSES/PSNS Flow	528
	PSES/PSNS Effluent Standards	528
	Cost of Application and Effluent Reduction Benefits	529
	Non-Water Quality Aspects of PSES/PSNS	529
XIV.	ACKNOWLEDGMENTS	537
XV.	REFERENCES	539
XVI.	GLOSSARY	543
	Appendix A - Toxic Organic Pollutants Included in TTO for Each Process Segment	565
	Appendix B - Water Chemistry Recycle Model Sensitivity Analyses	575
	Appendix C - Guidance for Implementing the Metal Molding and Casting Category Regulations	591

LIST OF TABLES

Number		Page
I-1	POLLUTANT PARAMETERS REGULATED	6
I-2	APPLIED FLOW RATES, RECYCLE RATES, AND DISCHARGE RATES THAT FORM THE BASIS OF BPT	8
II-1	BPT LIMITATIONS COVERING CONTINUOUS DIRECT DISCHARGES	12
II-2	BPT LIMITATIONS COVERING NON-CONTINUOUS DIRECT WASTEWATER DISCHARGES	14
II-3	BAT LIMITATIONS COVERING CONTINUOUS DIRECT DISCHARGES	18
II-4	BAT LIMITATIONS COVERING NON-CONTINUOUS DIRECT WASTEWATER DISCHARGES	22
II-5	NSPS LIMITATIONS COVERING CONTINUOUS DIRECT DISCHARGES	25
II-6	NSPS LIMITATIONS COVERING NON-CONTINUOUS DIRECT WASTEWATER DISCHARGES	28
II-7	PSES LIMITATIONS COVERING CONTINUOUS INDIRECT DISCHARGES	34
II-8	PSNS LIMITATIONS COVERING CONTINUOUS INDIRECT DISCHARGES	37
III-1	PENTON FOUNDRY CENSUS INFORMATION	80
III-2	FOUNDRY SHIPMENTS IN THE UNITED STATES	81
III-3	DISTRIBUTION OF WET AND DRY PLANTS IN THE METAL MOLDING AND CASTING INDUSTRY	82
III-4	PERCENTAGE OF ACTIVE "WET" OPERATIONS WITHIN EACH EMPLOYEE GROUP	83
V-1	APPLIED FLOW RATES FOR ALUMINUM CASTING CLEANING	154
V-2	APPLIED FLOW RATES FOR ALUMINUM CASTING QUENCH	155
V-3	APPLIED FLOW RATES FOR ALUMINUM DIE CASTING	156

LIST OF TABLES (Continued)

Number		Page
V-4	APPLIED FLOW RATES FOR ALUMINUM DUST COLLECTION SCRUBBER	157
V-5	APPLIED FLOW RATES FOR ALUMINUM GRINDING SCRUBBER	158
V-6	APPLIED FLOW RATES FOR ALUMINUM, COPPER, AND FERROUS INVESTMENT CASTING	158
V-7	APPLIED FLOW RATES FOR ALUMINUM MELTING FURNACE SCRUBBER	159
V-8	APPLIED FLOW RATES FOR ALUMINUM MOLD COOLING	160
V-9	APPLIED FLOW RATES FOR COPPER CASTING QUENCH	161
V-10	APPLIED FLOW RATES FOR COPPER DIRECT CHILL CASTING	162
V-11	APPLIED FLOW RATES FOR COPPER DUST COLLECTION SCRUBBER	162
V-12	APPLIED FLOW RATES FOR COPPER GRINDING SCRUBBER	163
V-13	APPLIED FLOW RATES FOR COPPER MELTING FURNACE SCRUBBER	163
V-14	APPLIED FLOW RATES FOR COPPER MOLD COOLING	164
V-15	APPLIED FLOW RATES FOR FERROUS CASTING CLEANING	165
V-16	APPLIED FLOW RATES FOR FERROUS CASTING QUENCH	166
V-17	APPLIED FLOW RATES FOR FERROUS DUST COLLECTION SCRUBBER	168
V-18	APPLIED FLOW RATES FOR FERROUS GRINDING SCRUBBER	176
V-19	APPLIED FLOW RATES FOR FERROUS MELTING FURNACE SCRUBBER	178

LIST OF TABLES (Continued)

Number		Page
V-20	APPLIED FLOW RATES FOR FERROUS MOLD COOLING	182
V-21	APPLIED FLOW RATES FOR FERROUS SLAG QUENCH	183
V-22	APPLIED FLOW RATES FOR FERROUS WET SAND RECLAMATION	186
V-23	APPLIED FLOW RATES FOR MAGNESIUM CASTING QUENCH	187
V-24	APPLIED FLOW RATES FOR MAGNESIUM DUST COLLECTION SCRUBBER	187
V-25	APPLIED FLOW RATES FOR MAGNESIUM GRINDING SCRUBBER	187
V-26	APPLIED FLOW RATES FOR ZINC CASTING QUENCH	188
V-27	APPLIED FLOW RATES FOR ZINC DIE CASTING	189
V-28	APPLIED FLOW RATES FOR ZINC MELTING FURNACE SCRUBBER	190
V-29	APPLIED FLOW RATES FOR ZINC MOLD COOLING	190
V-30	METAL MOLDING AND CASTING ANALYTICAL DATA SUMMARY-ALUMINUM CASTING QUENCH-RAW WASTEWATER	191
V-31	METAL MOLDING AND CASTING ANALYTICAL DATA SUMMARY-ALUMINUM DIE CASTING-RAW WASTEWATER	193
V-32	METAL MOLDING AND CASTING ANALYTICAL DATA SUMMARY-ALUMINUM INVESTMENT CASTING-RAW WASTEWATER	195
V-33	METAL MOLDING AND CASTING ANALYTICAL DATA SUMMARY-ALUMINUM MELTING FURNACE SCRUBBER-RAW WASTEWATER	197
V-34	METAL MOLDING AND CASTING ANALYTICAL DATA SUMMARY-COPPER DIRECT CHILL CASTING-RAW WASTEWATER	198

LIST OF TABLES (Continued)

Table		Page
V-35	METAL MOLDING AND CASTING ANALYTICAL DATA SUMMARY-COPPER DUST COLLECTION SCRUBBER-RAW WASTEWATER	199
V-36	METAL MOLDING AND CASTING ANALYTICAL DATA SUMMARY-COPPER MOLDING COOLING-RAW WASTEWATER	201
V-37	METAL MOLDING AND CASTING ANALYTICAL DATA SUMMARY-FERROUS CASTING CLEANING-RAW WASTEWATER	202
V-38	METAL MOLDING AND CASTING ANALYTICAL DATA SUMMARY-FERROUS CASTING QUENCH-RAW WASTEWATER	203
V-39	METAL MOLDING AND CASTING ANALYTICAL DATA SUMMARY-FERROUS DUST COLLECTION SCRUBBER-RAW WASTEWATER	204
V-40	METAL MOLDING AND CASTING ANALYTICAL DATA SUMMARY-FERROUS MELTING FURNACE SCRUBBER-RAW WASTEWATER	207
V-41	METAL MOLDING AND CASTING ANALYTICAL DATA SUMMARY-FERROUS MOLD COOLING-RAW WASTEWATER	209
V-42	METAL MOLDING AND CASTING ANALYTICAL DATA SUMMARY-FERROUS SLAG QUENCH-RAW WASTEWATER	210
V-43	METAL MOLDING AND CASTING ANALYTICAL DATA SUMMARY-FERROUS WET SAND RECLAMATION-RAW WASTEWATER	211
V-44	METAL MOLDING AND CASTING ANALYTICAL DATA SUMMARY-MAGNESIUM GRINDING SCRUBBER-RAW WASTEWATER	213
V-45	METAL MOLDING AND CASTING ANALYTICAL DATA SUMMARY-ZINC CASTING QUENCH-RAW WASTEWATER	214
V-46	METAL MOLDING AND CASTING ANALYTICAL DATA SUMMARY-ZINC DIE CASTING-RAW WASTEWATER	216
V-47	LIST OF 129 PRIORITY POLLUTANTS	218

LIST OF TABLES (Continued)

Table		Page
V-48	NON-PRIORITY POLLUTANTS ANALYZED FOR DURING MM&C SAMPLING EFFORTS	223
V-49	SUMMARY OF SAMPLING ACTIVITIES	224
VI-1	FREQUENCY OF OCCURRENCE OF CONVENTIONAL AND NONCONVENTIONAL POLLUTANT PARAMETERS IN THE ALUMINUM SUBCATEGORY	294
VI-2	FREQUENCY OF OCCURRENCE OF THE PRIORITY POLLUTANTS - ALUMINUM SUBCATEGORY	295
VI-3	FREQUENCY OF OCCURRENCE OF CONVENTIONAL AND NONCONVENTIONAL POLLUTANT PARAMETERS IN THE COPPER SUBCATEGORY	297
VI-4	FREQUENCY OF OCCURRENCE OF THE PRIORITY POLLUTANTS - COPPER SUBCATEGORY	298
VI-5	FREQUENCY OF OCCURRENCE OF CONVENTIONAL AND NONCONVENTIONAL POLLUTANT PARAMETERS IN THE FERROUS SUBCATEGORY	299
VI-6	FREQUENCY OF OCCURRENCE OF THE PRIORITY POLLUTANTS - FERROUS SUBCATEGORY	300
VI-7	FREQUENCY OF OCCURRENCE OF CONVENTIONAL AND NONCONVENTIONAL POLLUTANT PARAMETERS IN THE MAGNESIUM SUBCATEGORY	302
VI-8	FREQUENCY OF OCCURRENCE OF THE PRIORITY POLLUTANTS - MAGNESIUM SUBCATEGORY	303
VI-9	FREQUENCY OF OCCURRENCE OF CONVENTIONAL AND NONCONVENTIONAL POLLUTANT PARAMETERS IN THE ZINC SUBCATEGORY	304
VI-10	FREQUENCY OF OCCURRENCE OF THE PRIORITY POLLUTANTS - ZINC SUBCATEGORY	305
VI-11	ORGANIC PRIORITY POLLUTANTS CONSIDERED FOR REGULATION IN EACH PROCESS SEGMENT - ALUMINUM SUBCATEGORY	306
VI-12	ORGANIC PRIORITY POLLUTANTS CONSIDERED FOR REGULATION IN EACH PROCESS SEGMENT - COPPER SUBCATEGORY	307

LIST OF TABLES (Continued)

Table		Page
VI-13	ORGANIC PRIORITY POLLUTANTS CONSIDERED FOR REGULATION IN EACH PROCESS SEGMENT - FERROUS SUBCATEGORY	308
VI-14	ORGANIC PRIORITY POLLUTANTS CONSIDERED FOR REGULATION IN EACH PROCESS SEGMENT - MAGNESIUM SUBCATEGORY	309
VI-15	ORGANIC PRIORITY POLLUTANTS CONSIDERED FOR REGULATION IN EACH PROCESS SEGMENT - ZINC SUBCATEGORY	310
VII-1	TREATMENT TECHNOLOGY DEMONSTRATION STATUS	370
VII-2	CLASSES OF ORGANIC COMPOUNDS ADSORBED ON CARBON	371
VII-3	THEORETICAL SOLUBILITIES OF HYDROXIDES, CARBONATES, AND SULFIDES OF SELECTED METALS IN PURE WATER	372
VII-4	RECYCLE DEMONSTRATION STATUS	373
VII-5	METAL MOLDING AND CASTING LIME AND SETTLE TREATMENT EFFECTIVENESS CONCENTRATIONS EPA AND CONFIRMED DMR DATA	375
VII-6	METAL MOLDING AND CASTING LIME AND SETTLE TREATED EFFLUENT CONCENTRATIONS INDIVIDUAL PLANT DATA FOR COPPER	376
VII-7	METAL MOLDING AND CASTING LIME AND SETTLE TREATED EFFLUENT CONCENTRATIONS INDIVIDUAL PLANT DATA FOR LEAD	377
VII-8	METAL MOLDING AND CASTING LIME AND SETTLE TREATED EFFLUENT CONCENTRATIONS INDIVIDUAL PLANT DATA FOR ZINC	378
VII-9	METAL MOLDING AND CASTING LIME AND SETTLE TREATED EFFLUENT CONCENTRATIONS INDIVIDUAL PLANT DATA FOR OIL AND GREASE	379
VII-10	METAL MOLDING AND CASTING LIME AND SETTLE TREATED EFFLUENT CONCENTRATIONS INDIVIDUAL PLANT DATA FOR PHENOL	380

LIST OF TABLES (Continued)

Table		Page
VII-11	METAL MOLDING AND CASTING LIME AND SETTLE TREATED EFFLUENT CONCENTRATIONS INDIVIDUAL PLANT DATA FOR TOTAL SUSPENDED SOLIDS	381
VII-12	TREATMENT EFFECTIVENESS CONCENTRATIONS FOR THE METAL MOLDING AND CASTING CATEGORY - OPTION 2	382
VII-13	TREATMENT EFFECTIVENESS CONCENTRATIONS FOR PRIORITY TOXIC ORGANIC POLLUTANTS	383
VII-14	TREATMENT EFFECTIVENESS CONCENTRATIONS FOR THE METAL MOLDING AND CASTING CATEGORY - OPTION 3	385
VII-15	LIME AND SETTLE EFFLUENT DATA COMPARISON BETWEEN THE COMBINED METALS DATA BASE AND METAL MOLDING CASTING DATA	386
VII-16	MULTIMEDIA FILTER PERFORMANCE	387
VIII-1	METAL MOLDING AND CASTING INDUSTRY GUIDELINES MODEL COSTS	424
VIII-2	MODEL PLANT COSTS - OPTION 1	425
VIII-3	MODEL PLANT COSTS - OPTION 2	430
VIII-4	MODEL PLANT COSTS - OPTION 3	435
VIII-5	MODEL PLANT COSTS - OPTION 4	440
VIII-6	MODEL PLANT COSTS - OPTION 5	445
VIII-7	PROJECTED NUMBER OF ACTIVE WET PROCESSES IN THE METAL MOLDING AND CASTING INDUSTRY	446
VIII-8	ESTIMATED INSTALLED CAPITAL COSTS FOR SEGREGATION OF NONCONTACT COOLING WATER	451
VIII-9	SELECTED PROCESS SEGMENT COMBINATIONS FOR CENTRAL TREATMENT COST STUDY	452
VIII-10	INCREMENTAL POLLUTANT REMOVAL ESTIMATES DUE TO APPLICATION OF MODEL TREATMENT TECHNOLOGY	453

LIST OF TABLES (Continued)

Table		Page
VIII-11	NET INCREASE IN ELECTRICAL ENERGY CONSUMPTION DUE TO APPLICATION OF MODEL TREATMENT TECHNOLOGY	454
VIII-12	INCREMENTAL INCREASE IN SOLID WASTE GENERATION DUE TO APPLICATION OF MODEL TREATMENT TECHNOLOGY	455
VIII-13	CONSUMPTIVE WATER LOSS DUE TO APPLICATION OF HIGH RATE RECYCLE	456
IX-1	APPLIED FLOW RATES, RECYCLE RATES, AND DISCHARGE RATES THAT FORM THE BASIS OF BPT	482
IX-2	BPT LIMITATIONS COVERING CONTINUOUS DIRECT DISCHARGE	484
IX-3	BPT LIMITATIONS COVERING NON-CONTINUOUS DIRECT WASTEWATER DISCHARGES	486
X-1	APPLIED FLOW RATES, RECYCLE RATES, AND DISCHARGE RATES THAT FORM THE BASIS OF BAT	498
X-2	BAT LIMITATIONS COVERING CONTINUOUS DIRECT DISCHARGES	500
X-3	BAT LIMITATIONS COVERING NON-CONTINUOUS DIRECT WASTEWATER DISCHARGES	503
XII-1	APPLIED FLOW RATES, RECYCLE RATES, AND DISCHARGE RATES THAT FORM THE BASIS OF NSPS	512
XII-2	NSPS LIMITATIONS COVERING CONTINUOUS DIRECT DISCHARGES	514
XII-3	NSPS LIMITATIONS COVERING NON-CONTINUOUS DIRECT WASTEWATER DISCHARGES	517
XIII-1	PASS-THROUGH ANALYSIS	531
XIII-2	APPLIED FLOW RATES, RECYCLE RATES, AND DISCHARGE RATES THAT FORM THE BASIS OF PSES AND PSNS	532
XIII-3	PSES AND PSNS LIMITATIONS COVERING CONTINUOUS INDIRECT DISCHARGES	534

LIST OF TABLES (Continued)

Table		Page
C-1	PLANT A MAXIMUM FOR MONTHLY AVERAGE BPT EFFLUENT LIMITATIONS	602
C-2	PLANT A MAXIMUM FOR MONTHLY AVERAGE BAT EFFLUENT LIMITATIONS	604

LIST OF FIGURES

Figure		Page
III-1	FOUNDRY INDUSTRY STUDY PRODUCT FLOW DIAGRAM	84
III-2	INVESTMENT FOUNDRY PROCESS FLOW DIAGRAM	85
III-3	ALUMINUM DIE CASTING PROCESS FLOW DIAGRAM	86
III-4	COPPER AND ALLOYS PROCESS FLOW DIAGRAM	87
III-5	FERROUS FOUNDRY PROCESS FLOW DIAGRAM	88
III-6	MAGNESIUM FOUNDRY PROCESS FLOW DIAGRAM	89
III-7	ZINC DIE CASTING PROCESS FLOW DIAGRAM	90
III-8	IRON FOUNDRY CUPOLA TYPE III PROCESS FLOW DIAGRAM	91
III-9	IRON FOUNDRY CUPOLA TYPE II PROCESS FLOW DIAGRAM	92
V-1	PLANT WATER FLOW DIAGRAM - PLANT 00001	226
V-2	PLANT WATER FLOW DIAGRAM - PLANT 00002	227
V-3	PLANT WATER FLOW DIAGRAM - PLANT 04622	228
V-4	PLANT WATER FLOW DIAGRAM - PLANT 04704	229
V-5	PLANT WATER FLOW DIAGRAM - PLANT 04736	230
V-6	PLANT WATER FLOW DIAGRAM - PLANT 06809	231
V-7	PLANT WATER FLOW DIAGRAM - PLANT 06956	232
V-8	PLANT WATER FLOW DIAGRAM - PLANT 07170	233
V-9	PLANT WATER FLOW DIAGRAM - PLANT 07929	234
V-10	PLANT WATER FLOW DIAGRAM - PLANT 08146	235
V-11	PLANT WATER FLOW DIAGRAM - PLANT 09094	236
V-12	PLANT WATER FLOW DIAGRAM - PLANT 09441	237
V-13	PLANT WATER FLOW DIAGRAM - PLANT 10308	238

LIST OF FIGURES (continued)

Figure		Page
V-14	PLANT WATER FLOW DIAGRAM - PLANT 10837	239
V-15	PLANT WATER FLOW DIAGRAM - PLANT 12040	240
V-16	PLANT WATER FLOW DIAGRAM - PLANT 15265	241
V-17	PLANT WATER FLOW DIAGRAM - PLANT 15520	242
V-18	PLANT WATER FLOW DIAGRAM - PLANT 15654	243
V-19	PLANT WATER FLOW DIAGRAM - PLANT 17089	244
V-20	PLANT WATER FLOW DIAGRAM - PLANT 17230	245
V-21	PLANT WATER FLOW DIAGRAM - PLANT 18139	246
V-22	PLANT WATER FLOW DIAGRAM - PLANT 19872	247
V-23	PLANT WATER FLOW DIAGRAM - PLANT 20007	248
V-24	PLANT WATER FLOW DIAGRAM - PLANT 20009	249
V-25	PLANT WATER FLOW DIAGRAM - PLANT 20017	250
V-26	PLANT WATER FLOW DIAGRAM - PLANT 20147	251
V-27	PLANT WATER FLOW DIAGRAM - PLANT 50000	252
V-28	PLANT WATER FLOW DIAGRAM - PLANT 50315	253
V-29	PLANT WATER FLOW DIAGRAM - PLANT 51026	254
V-30	PLANT WATER FLOW DIAGRAM - PLANT 51115	255
V-31	PLANT WATER FLOW DIAGRAM - PLANT 51473	256
V-32	PLANT WATER FLOW DIAGRAM - PLANT 52491	257
V-33	PLANT WATER FLOW DIAGRAM - PLANT 52881	258
V-34	PLANT WATER FLOW DIAGRAM - PLANT 53219	259
V-35	PLANT WATER FLOW DIAGRAM - PLANT 53642	260
V-36	PLANT WATER FLOW DIAGRAM - PLANT 54321	261
V-37	PLANT WATER FLOW DIAGRAM - PLANT 55122	262

LIST OF FIGURES (Continued)

Figure		Page
V-38	PLANT WATER FLOW DIAGRAM - PLANT 55217	263
V-39	PLANT WATER FLOW DIAGRAM - PLANT 56123	264
V-40	PLANT WATER FLOW DIAGRAM - PLANT 56771	265
V-41	PLANT WATER FLOW DIAGRAM - PLANT 56789	266
V-42	PLANT WATER FLOW DIAGRAM - PLANT 57100	267
V-43	PLANT WATER FLOW DIAGRAM - PLANT 57775	268
V-44	PLANT WATER FLOW DIAGRAM - PLANT 58589	269
V-45	PLANT WATER FLOW DIAGRAM - PLANT 59101	270
V-46	PLANT WATER FLOW DIAGRAM - PLANT 59212	271
VII-1	ACTIVATED CARBON ADSORPTION COLUMN	388
VII-2	LEAD SOLUBILITY IN THREE ALKALIES	389
VII-3	GRANULAR BED FILTRATION	390
VII-4	PRESSURE FILTRATION	391
VII-5	REPRESENTATIVE TYPES OF SEDIMENTATION	392
VII-6	GRAVITY OIL/WATER SEPARATOR	393
VII-7	VACUUM FILTRATION	394
VII-8	CENTRIFUGATION	395
VII-9	DISSOLVED AIR FLOTATION	396
VII-10	GRAVITY THICKENING	397
VII-11	SLUDGE DRYING BED	398
VII-12	SIMPLIFIED ULTRAFILTRATION FLOW SCHEMATIC	399
VII-13	WATER CHEMISTRY - GENERALIZED WASTEWATER RECYCLE SYSTEM	400
VII-14	TREATMENT OPTION 1: RECYCLE AND SETTLE	401

LIST OF FIGURES (Continued)

Figure		Page
VII-15	TREATMENT OPTION 2: RECYCLE, LIME, AND SETTLE	402
VII-16	TREATMENT OPTION 2 FOR ALUMINUM AND ZINC DIE CASTING PROCESS SEGMENTS	403
VII-17	TREATMENT OPTION 3: RECYCLE, LIME, SETTLE, AND FILTER	404
VII-18	TREATMENT OPTION 3 FOR ALUMINUM AND ZINC DIE CASTING PROCESS SEGMENTS	405
VII-19	TREATMENT OPTION 4: RECYCLE, LIME, SETTLE, FILTER, AND CARBON ADSORPTION	406
VII-20	TREATMENT OPTION 4 FOR ALUMINUM AND ZINC DIE CASTING PROCESS SEGMENTS	407
VII-21	TREATMENT OPTION 5: SETTLE AND COMPLETE RECYCLE	408
C-1	BLOCK DIAGRAM OF EXAMPLE 1 - INTEGRATED COPPER CASTING AND FORMING PLANT	600
C-2	BLOCK DIAGRAM OF EXAMPLE 2 - ALUMINUM AND ZINC DIE CASTING PLANT	606
C-3	COMBINED WASTESTREAMS FOR EXAMPLE 3 - INTEGRATED GRAY IRON FOUNDRY AND HEAVY EQUIPMENT MANUFACTURER	610
C-4	BLOCK DIAGRAM OF EXAMPLE 4 - INVESTMENT CASTING PLANT	620
C-5	COMBINED WASTESTREAMS FOR EXAMPLE 5 - MALLEABLE IRON PLANT	624

SECTION I

SUMMARY AND CONCLUSIONS

This document presents the technical rationale for effluent limitations guidelines and standards for the metal molding and casting point source category as required by the Clean Water Act of 1977 (P.L. 95-217, "the Act") and the Settlement Agreement in Natural Resources Defense Council, Inc. v. Train, 8 ERC 2120 (D.D.C. 1976), modified, 12 ERC 1833 (D.D.C. 1979), modified by Orders dated October 26, 1982, August 2, 1983, January 6, 1984, July 5, 1984, and January 7, 1985. This document describes the technologies which form the bases for effluent limitations guidelines reflecting the best practicable control technology currently available (BPT) and the best available technology economically achievable (BAT), new source performance standards (NSPS), and pretreatment standards for new and existing sources (PSNS and PSES).

Effluent limitations guidelines based on the application of BPT and BAT are to be achieved by existing direct dischargers. New source performance standards (NSPS) based on the best available demonstrated technology are to be achieved by new direct discharging facilities. Pretreatment standards for existing and new sources (PSES and PSNS) are to be acheived by indirect dischargers for those pollutants which are incompatible with or not susceptible to treatment in a publicly owned treatment works (POTW). These guidelines and standards are required by Sections 301, 304, 306, and 307 of the Clean Water Act.

On November 15, 1982 at 47 FR 51512, the Agency proposed regulations for six subcategories and 19 process segments of the metal molding and casting point source category. Following receipt and evaluation of public comments on these proposed regulations, the Agency published a notice of availability on March 20, 1984 at 49 FR 10280 concerning its intended modifications to or confirmations of the underlying facets of the proposed regulations. Following receipt and evaluation of public comments on this notice, the Agency published a second notice of availability on February 15, 1985 at 50 FR 6572 in which it summarized the major issues raised in comments on the first notice and requested additional specific information. In summary, these three publications explain how the final regulations supported by this document were developed.

For the purpose of establishing BPT, BAT, NSPS, PSES, and PSNS for the metal molding and casting category, EPA developed a subcategorization and process segmentation scheme. In developing this scheme, the Agency considered numerous factors:

1. Type of metal cast
2. Manufacturing process and water use
3. Air pollution sources
4. Pollutant concentrations in raw wastewater
5. Raw materials
6. Process chemicals
7. Plant size
8. Plant age
9. Geographic location
10. Central treatment
11. Make-up water quality

The type of metal cast is the principal factor affecting the Agency's subcategorization scheme. Differences in the physical and chemical properties of the various types of metals cast can result in differences in manufacturing processes, raw materials, process chemical use, sources of air pollution, water use, and process wastewater characteristics. The type of process employed can also effect wastewater characteristics and water use.

Following an analysis of all the data and information submitted on the Agency's proposed regulations, the Agency expanded its subcategorization scheme as explained in the March 20, 1984, notice of availability of new information (49 FR 10280). The Agency's final subcategorization scheme includes five subcategories and 31 process segments. This scheme is as follows:

Aluminum Casting Subcategory

1. Casting cleaning
2. Casting quench
3. Die casting
4. Dust collection scrubber
5. Grinding scrubber
6. Investment casting
7. Melting furnace scrubber
8. Mold cooling

Copper Casting Subcategory

1. Casting quench
2. Direct chill casting
3. Dust collection scrubber
4. Grinding scrubber
5. Investment casting
6. Melting furnace scrubber
7. Mold cooling

Ferrous Casting Subcategory

1. Casting cleaning
2. Casting quench
3. Dust collection scrubber
4. Grinding scrubber
5. Investment casting
6. Melting furnace scrubber
7. Mold cooling
8. Slag quench
9. Wet sand reclamation

Magnesium Casting Subcategory

1. Casting Quench
2. Dust collection scrubber
3. Grinding scrubber

Zinc Casting Subcategory

1. Casting quench
2. Die casting
3. Melting furnace scrubber
4. Mold cooling

For a complete discussion of the subcategorization scheme, see Section IV of this document.

EPA studied in-plant control and wastewater recycle in the metal molding and casting category. The Agency also studied various end-of-pipe technologies to treat the process wastewaters generated in this point source category, and then identified model treatment systems as possible technology bases for the regulation. These technologies included:

Sedimentation
Chemical precipitation and sedimentation
Flocculation
Neutralization
Multimedia filtration
Vacuum filtration
Chemical emulsion breaking
Oil Skimming
Evaporative cooling
Oxidation by potassium permanganate
Activated carbon adsorption

All technologies except activated carbon adsorption are part of the technology bases of the final regulations.

Model treatment system costs were prepared for each of several levels of treatment considered in each process segment. Using these model costs and the information provided in the Data Collection Portfolios (DCPs) as submitted and updated by industry, the Agency estimated the compliance cost impact of the

final regulation on the industry. The Agency also estimated the expected economic impacts of these costs in terms of the number of potential plant closures, the number of employees affected, and the impact on price and balance of trade and other considerations. These results are reported in the economic impact analysis. (See Economic Impact Analysis of Effluent Limitations and Standards for the Metal Molding and Casting Industry, U.S. EPA, 440/2-85-028, September 1985).

EPA is promulgating final regulations for four of the six subcategories for which it had proposed regulations. One of the two subcategories not being regulated, the lead casting subcategory, was transferred to the battery manufacturing category. The other subcategory, the magnesium casting subcategory, is not subject to these final categorical regulations because the Agency has determined that regulations based on the technologies considered for this regulation would not be economically achievable for existing plants in the subcategory and that the costs of compliance with the regulations would present a barrier to entry to new plants.

No discharge of process wastewater pollutants is the basis of final BPT, BAT, NSPS, PSES, and PSNS regulations for three of the 28 regulated process segments of this category. These are the grinding scrubber process segments of the aluminum, copper, and ferrous casting subcategories. Final BPT regulations for the remaining 25 process segments are generally based on high rate recycle and treatment of the allowed blowdown by oil skimming and lime precipitation and settling (with emulsion breaking and/or chemical oxidation, if required). For two process segments, the aluminum and zinc die casting segments, complete treatment is within the recycle loop.

As explained in Section X of this document, BAT regulations based on high rate recycle, oil skimming, lime precipitation and settling, and filtration are being promulgated for the copper and zinc subcategories and for the ferrous subcategory except for (a) plants where steel is the primary metal cast or (b) plants pouring less than 3,557 tons of metal per year where malleable iron is the primary metal cast. BAT limitations equal to BPT limitations are being promulgated for the aluminum casting subcategory, for direct dischargers in the ferrous subcategory where steel is the primary metal cast, and for direct dischargers pouring less than 3,557 tons of metal per year where malleable iron is the primary metal cast. As explained in Section XI of this document, BCT regulations for the metal molding and casting category are not being promulgated at this time.

For the reasons explained in Section XII of this document, EPA is promulgating NSPS equal to BAT effluent limitations for each subcategory segment being regulated. As explained in Section XIII of this document, PSES and PSNS are being promulgated equal the BAT technology for all subcategories except the ferrous subcategory for indirect dischargers pouring less than 1,784 tons of metal per year where gray iron is the primary metal cast. In

this case, PSES and PSNS are based upon the BPT technology.

On the basis of its review of data on raw wastewater characteristics and taking into account the statutory factors, EPA is establishing regulations controlling the following pollutants and pollutant parameters:

pH	Total toxic organics (PSES/PSNS)
Total suspended solids	Copper
Oil and Grease	Lead
Phenols (4AAP)	Zinc

A list of the pollutants that are regulated for each subcategory by the BPT and BAT effluent limitations guidelines, NSPS, PSES, and PSNS is presented in Table I-1. TTO is defined separately for each process segment for which toxic organic pollutants are regulated. The applied flow rates, recycle rates, and discharge flow rates that form the basis of the final regulations are shown in Table I-2. The BPT flow rates also apply to BAT, NSPS, PSES, and PSNS.

TABLE I-1

POLLUTANT PARAMETERS REGULATED

Applicable to:	Direct Dischargers			Direct and Indirect Dischargers				
Subcategory and Process Segment	Characteristic Pollutants					Toxic Pollutants		
	pH	TSS	O&G(3)	Phenol(1)	TTO(2)	Copper	Lead	Zinc
Aluminum								
Casting Cleaning	x	x	x			x	x	x
Casting Quench	x	x	x		x	x	x	x
Die Casting	x	x	x	x	x	x	x	x
Dust Collection Scrubber	x	x	x	x	x	x	x	x
Grinding Scrubber	----------No Discharge of Pollutants----------							
Investment Casting	x	x	x		x	x	x	x
Melting Furnace Scrubber	x	x	x	x	x	x	x	x
Mold Cooling	x	x	x		x	x	x	x
Copper								
Casting Quench	x	x	x		x	x	x	x
Direct Chill Casting	x	x	x			x	x	x
Dust Collection Scrubber	x	x	x	x	x	x	x	x
Grinding Scrubber	----------No Discharge of Pollutants----------							
Investment Casting	x	x	x		x	x	x	x
Melting Furnace Scrubber	x	x	x	x	x	x	x	x
Mold Cooling	x	x	x		x	x	x	x
Ferrous								
Casting Cleaning	x	x	x			x	x	x
Casting Quench	x	x	x		x	x	x	x
Dust Collection Scrubber	x	x	x	x	x	x	x	x
Grinding Scrubber	----------No Discharge of Pollutants----------							
Investment Casting	x	x	x		x	x	x	x
Melting Furnace Scrubber	x	x	x	x	x	x	x	x
Mold Cooling	x	x	x		x			
Slag Quench	x	x	x		x	x	x	x
Wet Sand Reclamation	x	x	x	x	x	x	x	x

TABLE I-1
(CONTINUED)

Applicable to:	Direct Dischargers			Direct and Indirect Dischargers				
Subcategory and Process Segment	Characteristic Pollutants			Toxic Pollutants				
	pH	TSS	O&G(3)	Phenol(1)	TTO(2)	Copper	Lead	Zinc
Zinc								
Casting Quench	x	x	x		x	x	x	x
Die Casting	x	x	x	x	x	x	x	x
Melting Furnace Scrubber	x	x	x	x	x	x	x	x
Mold Cooling	x	x	x		x	x	x	x

(1) Total Phenols - Phenol as measured by the 4 aminoantipyrene method - 4AAP

(2) TTO - Total Toxic Organics measured as the sum of all toxic organic compounds found in treatable concentrations. See Appendix A for lists of the specific toxic organics included in TTO for each subcategory segment. Limitations for TTO are established only for PSES and PSNS.

(3) Oil and Grease may be used as an alternate monitoring parameter for TTO by indirect dischargers.

Table I-2

APPLIED FLOW RATES, RECYCLE RATES, AND DISCHARGE RATES THAT FORM THE BASIS OF BPT, BAT, NSPS, PSES, AND PSNS

Subcategory/Process Segment	Production Normalized Applied Flow Rate	Production Normalizing Parameter	Recycle Rate	Production Normalized Discharge Flow*
Aluminum				
Casting Cleaning	480 gal/ton	ton of metal poured	95%	24.0 gal/ton
Casting Quench	145 gal/ton	ton of metal poured	98%	2.90 gal/ton
Die Casting	41.4 gal/ton	ton of metal poured	95%	2.07 gal/ton
Dust Collection Scrubber	1.78 gal/1,000 SCF	1,000 SCF of air flow through the scrubber	98%	0.036 gal/1,000 SCF
Grinding Scrubber	0.063 gal/1,000 SCF	1,000 SCF of air flow through the scrubber	100%	0
Investment Casting	17,600 gal/ton	ton of metal poured	85%	2,640 gal/ton
Melting Furnace Scrubber	11.7 gal/1,000 SCF	1,000 SCF of air flow through the scrubber	96%	0.468 gal/1,000 SCF
Mold Cooling	1,850 gal/ton	ton of metal poured	95%	92.5 gal/ton
Copper				
Casting Quench	478 gal/ton	ton of metal poured	98%	9.56 gal/ton
Direct Chill Casting	5,780 gal/ton	ton of metal poured	95%	289 gal/ton
Dust Collection Scrubber	4.29 gal/1,000 SCF	1,000 SCF of air flow through the scrubber	98%	0.086 gal/1,000 SCF
Grinding Scrubber	0.111 gal/1,000 SCF	1,000 SCF of air flow through the scrubber	100%	0
Investment Casting	17,600 gal/ton	ton of metal poured	85%	2,640 gal/ton
Melting Furnace Scrubber	7.04 gal/1,000 SCF	1,000 SCF of air flow through the scrubber	96%	0.282 gal/1,000 SCF
Mold Cooling	2,450 gal/ton	ton of metal poured	95%	122 gal/ton
Ferrous				
Casting Cleaning	213 gal/ton	ton of metal poured	95%	10.7 gal/ton
Casting Quench	571 gal/ton	ton of metal poured	98%	11.4 gal/ton
Dust Collection Scrubber	3.0 gal/1,000 SCF	1,000 SCF of air flow through the scrubber	97%	0.090 gal/1,000 SCF
Grinding Scrubber	3.17 gal/1,000 SCF	1,000 SCF of air flow through the scrubber	100%	0
Investment Casting	17,600 gal/ton	ton of metal poured	85%	2,640 gal/ton
Melting Furnace Scrubber	10.5 gal/1,000 SCF	1,000 SCF of air flow through the scrubber	96%	0.420 gal/1,000 SCF

Table I-2 (Continued)

APPLIED FLOW RATES, RECYCLE RATES, AND DISCHARGE RATES THAT FORM THE BASIS OF BPT, BAT, NSPS, PSES, AND PSNS

Subcategory/Process Segment	Production Normalized Applied Flow Rate	Production Normalizing Parameter	Recycle Rate	Production Normalized Discharge Flow*
Ferrous (Cont.)				
Mold Cooling	707 gal/ton	ton of metal poured	95%	35.4 gal/ton
Slag Quench	727 gal/ton	ton of metal poured	94%	43.6 gal/ton
Wet Sand Reclamation	895 gal/ton	ton of sand reclaimed	80%	179 gal/ton
Zinc				
Casting Quench	533 gal/ton	ton of metal poured	98%	10.7 gal/ton
Die Casting	41.4 gal/ton	ton of metal poured	95%	2.07 gal/ton
Melting Furnace Scrubber	6.07 gal/1,000 SCF	1,000 SCF of air flow through the scrubber	96%	0.243 gal/1,000 SCF
Mold Cooling	1,890 gal/ton	ton of metal poured	95%	94.5 gal/ton

SECTION II

RECOMMENDATIONS

EPA has established final effluent limitations guidelines and standards for 28 process segments in four subcategories of the metal molding and casting category. These process segments are listed in the tables included in this section.

The BPT and BAT effluent limitations guidelines and NSPS for direct dischargers presented at proposal and in the two notices of availability assumed that discharges from metal molding and casting plants would always be on a continuous basis. Information submitted in comments and confirmed by EPA indicate that treatment is commonly done on a batch basis with discharge on an intermittent basis. Consequently, EPA is establishing final regulations covering both continuous and intermittent dischargers. Intermittent or non-continuous dischargers are defined as plants which do not discharge pollutants during specific periods of time for reasons other than treatment plant upset, such periods being at least 24 hours in duration. Final BPT, BAT, and NSPS regulations covering continuous discharges are found in Tables II-1, II-3, and II-5, respectively. Final BPT, BAT, and NSPS regulations covering non-continuous discharges are found in Tables II-2, II-4, and II-6, respectively.

The PSES and PSNS for indirect dischargers, presented in Tables II-7 and II-8, respectively, cover continuous discharges only. POTWs may elect to establish concentration-based standards for discharges to POTWs, including non-continuous discharges. They may do so by establishing concentration-based pretreatment standards equivalent to the mass-based limitations and standards found in Tables II-1, II-3, and II-5. Equivalent concentration standards may be established by multiplying the mass limitations and standards included in the tables by an appropriate measurement of average production, raw material usage, or air flow (kkg of metal poured, kkg of sand reclaimed, or standard cubic meters of air scrubbed) and dividing by an appropriate measure of average discharge flow to the POTW, taking into account the proper conversion factors to ensure that the units (mg/l) are correct.

TABLE II-1

BPT LIMITATIONS* COVERING CONTINUOUS DIRECT DISCHARGES

Subcategory and Process Segment	TSS 30-Day Max.	TSS Daily Max.	Oil & Grease 30-Day Max.	Oil & Grease Daily Max.	Phenols(1) 30-Day Max.	Phenols(1) Daily Max.	Copper 30-Day Max.	Copper Daily Max.	Lead 30-Day Max.	Lead Daily Max.	Zinc 30-Day Max.	Zinc Daily Max.	pH
Aluminum													
Casting Cleaning	1.50	3.80	1.0	3.0	(3)	(3)	.0421	.0771	.039	.0791	.0431	.114	(2)
Casting Quench	.182	.46	.121	.363	(3)	(3)	.0051	.0093	.0047	.0096	.0052	.0138	(2)
Die Casting	.13	.33	.0864	.259	.0026	.0074	.0036	.0066	.0034	.0068	.0037	.0098	(2)
Dust Collection Scrubber	4.51	11.4	3.0	9.01	.09	.258	.126	.231	.117	.237	.129	.343	(2)
Grinding Scrubber	No Discharge of Pollutants												
Investment Casting	165	419	110	330	(3)	(3)	4.63	8.48	4.3	8.7	4.74	12.6	(2)
Melting Furnace Scrubber	58.6	148	39.1	117	1.17	3.36	1.64	3.01	1.52	3.09	1.68	4.45	(2)
Mold Cooling	5.79	14.7	3.86	11.6	(3)	(3)	.162	.297	.151	.305	.166	.44	(2)
Copper													
Casting Quench	0.598	1.52	0.399	1.2	(3)	(3)	.168	.0307	.0156	.0315	.0171	.0455	(2)
Direct Chill Casting	18.1	45.8	12.1	36.2	(3)	(3)	0.506	0.928	0.47	0.952	0.518	1.37	(2)
Dust Collection Scrubber	10.8	27.3	7.18	21.5	0.215	0.617	0.301	0.553	0.28	0.567	0.309	0.818	(2)
Grinding Scrubber	No Discharge of Pollutants												
Investment Casting	165	419	110	330	(3)	(3)	4.63	8.48	4.3	8.7	4.74	12.6	(2)
Melting Furnace Scrubber	35.3	89.4	23.5	70.6	0.706	2.02	0.988	1.81	0.918	1.86	1.01	2.68	(2)
Mold Cooling	7.63	19.3	5.09	15.3	(3)	(3)	D.214	0.392	0.199	0.402	0.219	0.58	(2)

* All limitations are in units of kg/100D kkg (lb per million lb) of metal poured except for the Wet Sand Reclamation, Dust Collection Scrubber, and Melting Furnace Scrubber process segments. In the case of the latter two process segments, the limitations are in units of kg/62.3 million Sm^3 (lb per billion SCF) of air scrubbed; in the case of the former process segment, the limitations are in units of kg/1000 kkg (lb per million lb) of sand reclaimed.

(1) Total Phenols - Phenols as measured by the 4-aminoantipyrene method (4AAP).

(2) Within the range of 7.0 to 10.0 at all times.

(3) Not regulated at BPT for this process segment.

TABLE II-1 (Continued)

BPT LIMITATIONS* COVERING CONTINUOUS DIRECT DISCHARGES

Subcategory and Process Segment	TSS 30-Day Max.	TSS Daily Max.	Oil & Grease 30-Day Max.	Oil & Grease Daily Max.	Phenols(1) 30-Day Max.	Phenols(1) Daily Max.	Copper 30-Day Max.	Copper Daily Max.	Lead 30-Day Max.	Lead Daily Max.	Zinc 30-Day Max.	Zinc Daily Max.	pH
Ferrous													
Casting Cleaning	0.67	1.7	0.446	1.34	(3)	(3)	0.0071	0.0129	0.0174	0.0353	0.025	0.0656	
Casting Quench	0.713	1.81	0.476	1.43	(3)	(3)	0.0076	0.0138	0.0185	0.0376	0.0266	0.0699	(2)
Dust Collection Scrubber	11.3	28.5	7.51	22.5	0.225	0.656	0.12	0.218	0.293	0.593	0.421	1.1	(2)
Grinding Scrubber	----------No Discharge of Pollutants----------												
Investment Casting	165	419	110	330	(3)	(3)	1.76	3.19	4.3	8.7	6.17	16.2	(2)
Melting Furnace Scrubber	52.6	133	35	105	1.05	3.01	0.561	1.02	1.37	2.77	1.96	5.15	(2)
Mold Cooling	2.22	5.61	1.48	4.43	(3)	(3)	0.0236	0.0428	0.0576	0.117	0.0827	0.217	(2)
Slag Quench	2.73	6.91	1.82	5.46	(3)	(3)	0.0291	0.0527	0.0709	0.144	0.102	0.267	(2)
Wet Sand Reclamation	11.2	28.4	7.47	22.4	0.224	0.642	0.12	0.217	0.291	0.59	0.418	1.1	(2)
Zinc													
Casting Quench	0.67	1.7	0.446	1.34	(3)	(3)	0.0187	0.0344	0.0174	0.0353	0.0192	0.0509	(2)
Die Casting	0.13	.328	0.0864	0.259	0.0026	0.0074	0.0036	0.0066	0.0034	0.0068	0.0037	0.0098	(2)
Melting Furnace Scrubber	30.4	77.1	20.3	60.8	0.608	1.74	0.852	1.56	0.791	1.6	0.872	2.31	(2)
Mold Cooling	5.91	15	3.94	11.8	(3)	(3)	0.166	0.304	0.154	0.311	0.17	0.449	(2)

* All limitations are in units of kg/1000 kkg (lb per million lb) of metal poured except for the Wet Sand Reclamation, Dust Collection Scrubber, and Melting Furnace Scrubber process segments. In the case of the latter two process segments, the limitations are in units of kg/62.3 million Sm^3 (lb per billion SCF) of air scrubbed; in the case of the former process segment, the limitations are in units of kg/1000 kkg (lb per million lb) of sand reclaimed.

(1) Total Phenols - Phenols as measured by the 4-aminoantipyrene method (4AAP).

(2) Within the range of 7.0 to 10.0 at all times

(3) Not regulated at BPT for this process segment.

TABLE II-2

BPT LIMITATIONS* COVERING NON-CONTINUOUS DIRECT WASTEWATER DISCHARGES

Subcategory and Process Segment	TSS 30-Day Max.	TSS Daily Max.	Oil & Grease 30-Day Max.	Oil & Grease Daily Max.	Phenols(1) 30-Day Max.	Phenols(1) Daily Max.
Aluminum						
Casting Cleaning	15(12/x)	38(12/x)	10(12/x)	30(12/x)	(3)	(3)
Casting Quench	15(1.45/x)	38(1.45/x)	10(1.45/x)	30(1.45/x)	(3)	(3)
Die Casting	15(1.04/x)	38(1.04/x)	10(1.04/x)	30(1.04/x)	0.3(1.04/x)	.86(1.04/x)
Dust Collection Scrubber	15(.036/y)	38(.036/y)	10(.036/y)	30(.036/y)	0.3(.036/y)	.86(.036/y)
Grinding Scrubber	----------	----------	No Discharge of Pollutants	----------	----------	----------
Investment Casting	15(1320/x)	38(1320/x)	10(1320/x)	30(1320/x)	(3)	(3)
Melting Furnace Scrubber	15(.468/y)	38(.468/y)	10(.468/y)	30(.468/y)	0.3(.468/y)	.86(.468/y)
Mold Cooling	15(46.3/x)	38(46.3/x)	10(46.3/x)	30(46.3/x)	(3)	(3)
Copper						
Casting Quench	15(4.8/x)	38(4.8/x)	10(4.8/x)	30(4.8/x)	(3)	(3)
Direct Chill Casting	15(145/x)	38(145/x)	10(145/x)	30(145/x)	(3)	(3)
Dust Collection Scrubber	15(.086/y)	38(.086/y)	10(.086/y)	30(.086/y)	0.3(.086/y)	.86(.086/y)
Grinding Scrubber	----------	----------	No Discharge of Pollutants	----------	----------	----------
Investment Casting	15(1320/x)	38(1320/x)	10(1320/x)	30(1320/x)	(3)	(3)
Melting Furnace Scrubber	15(.282/y)	38(.282/y)	10(.282/y)	30(.282/y)	0.3(.282/y)	.86(.282/y)
Mold Cooling	15(61/x)	38(61/x)	10(61/x)	30(61/x)	(3)	(3)

* All 30-Day Maximum and Daily Maximum limitations are in mg/l units. The annual average limitations are in units of kg/1000 kkg (lb per million lb) of metal poured except for the Wet Sand Reclamation, Dust Collection Scrubber, and Melting Furnace Scrubber process segments. In the case of the latter two process segments, the annual average limitations are in units of kg/62.3 million Sm^3 (lb per billion SCF) of air scrubbed; in the case of the former process segment, the limitations are in units of kg/1000 kkg (lb per million lb) of sand reclaimed.

(1) Total Phenols - Phenols as measured by the 4-aminoantipyrene method (4AAP).

(2) Within the range of 7.0 to 10.0 at all times.

(3) Not regulated at BPT for this process segment.

X = Actual normalized process wastewater flow (in gallons per 1,000 pounds of metal poured) for the specific plant.

Y = Actual normalized process wastewater flow (in gallons per 1,000 SCF of air scrubbed) for the specific plant.

TABLE II-2 (Continued)

BPT LIMITATIONS* COVERING NON-CONTINUOUS DIRECT WASTEWATER DISCHARGES

Subcategory and Process Segment	Copper 30-Day Max.	Copper Daily Max.	Lead 30-Day Max.	Lead Daily Max.	Zinc 30-Day Max.	Zinc Daily Max.	pH
Aluminum							
Casting Cleaning	.42(12/x)	.77(12/x)	.39(12/x)	.79(12/x)	.43(12/x)	1.14(12/x)	(2)
Casting Quench	.42(1.45/x)	.77(1.45/x)	.39(1.45/x)	.79(1.45/x)	.43(1.45/x)	1.14(1.45/x)	(2)
Die Casting	.42(1.04/x)	.77(1.04/x)	.39(1.04/x)	.79(1.04/x)	.43(1.04/x)	1.14(1.04/x)	(2)
Dust Collection Scrubber	.42(.036/y)	.77(.036/y)	.39(.036/y)	.79(.036/y)	.43(.036/y)	1.14(.036/y)	(2)
Grinding Scrubber	No Discharge of Pollutants						
Investment Casting	.42(1320/x)	.77(1320/x)	.39(1320/x)	.79(1320/x)	.43(1320/x)	1.14(1320/x)	(2)
Melting Furnace Scrubber	.42(.468/y)	.77(.468/y)	.39(.468/y)	.79(.468/y)	.43(.468/y)	1.14(.468/y)	(2)
Mold Cooling	.42(46.3/x)	.77(46.3/x)	.39(46.3/x)	.79(46.3/x)	.43(46.3/x)	1.14(46.3/x)	(2)
Copper							
Casting Quench	.42(4.8/x)	.77(4.8/x)	.39(4.8/x)	.79(4.8/x)	.43(4.8/x)	1.14(4.8/x)	(2)
Direct Chill Casting	.42(145/x)	.77(145/x)	.39(145/x)	.79(145/x)	.43(145/x)	1.14(145/x)	(2)
Dust Collection Scrubber	.42(.086/y)	.77(.086/y)	.39(.086/y)	.79(.086/y)	.43(.086/y)	1.14(.086/y)	(2)
Grinding Scrubber	No Discharge of Pollutants						
Investment Casting	.42(1320/x)	.77(1320/x)	.39(1320/x)	.79(1320/x)	.43(1320/x)	1.14(1320/x)	(2)
Melting Furnace Scrubber	.42(.282/y)	.77(.282/y)	.39(.282/y)	.79(.282/y)	.43(.282/y)	1.14(.282/y)	(2)
Mold Cooling	.42(61/x)	.77(61/x)	.39(61/x)	.79(61/x)	.43(61/x)	1.14(61/x)	(2)

* All 30-Day Maximum and Daily Maximum limitations are in mg/l units. The annual average limitations are in units of kg/1000 kkg (lb per million lb) of metal poured except for the Wet Sand Reclamation, Dust Collection Scrubber, and Melting Furnace Scrubber process segments. In the case of the latter two process segments, the annual average limitations are in units of kg/62.3 million Sm^3 (lb per billion SCF) of air scrubbed; in the case of the former process segment, the limitations are in units of kg/1000 kkg (lb per million lb) of sand reclaimed.

(1) Total Phenols - Phenols as measured by the 4-aminoantipyrene method (4AAP).

(2) Within the range of 7.0 to 10.0 at all times.

(3) Not regulated at BPT for this process segment.

X = Actual normalized process wastewater flow (in gallons per 1,000 pounds of metal poured) for the specific plant.

Y = Actual normalized process wastewater flow (in gallons per 1,000 SCF of air scrubbed) for the specific plant.

TABLE II-2 (Continued)

BPT LIMITATIONS* COVERING NON-CONTINUOUS DIRECT WASTEWATER DISCHARGES

Subcategory and Process Segment	TSS 30-Day Max.	TSS Daily Max.	Oil & Grease 30-Day Max.	Oil & Grease Daily Max.	Phenols(1) 30-Day Max.	Phenols(1) Daily Max.
Ferrous						
Casting Cleaning	15(5.35/x)	38(5.35/x)	10(5.35/x)	30(5.35/x)	(3)	(3)
Casting Quench	15(5.7/x)	38(5.7/x)	10(5.7/x)	30(5.7/x)	(3)	(3)
Dust Collection Scrubber	15(.09/y)	38(.09/y)	10(.09/y)	30(.09/y)	.3(.09/y)	.86(.09/y)
Grinding Scrubber	----------	----------	No Discharge of Pollutants	----------	----------	----------
Investment Casting	15(1320/x)	38(1320/x)	10(1320/x)	30(1320/x)	(3)	(3)
Melting Furnace Scrubber	15(.42/y)	38(.42/y)	10(.42/y)	30(.42/y)	.3(.42/y)	.86(.42/y)
Mold Cooling	15(17.7/x)	38(17.7/x)	10(17.7/x)	30(17.7/x)	(3)	(3)
Slag Quench	15(21.8/x)	38(21.8/x)	10(21.8/x)	30(21.8/x)	(3)	(3)
Wet Sand Reclamation	15(89.5/z)	38(89.5/z)	10(89.5/z)	30(89.5/z)	.3(89.5/z)	.86(89.5/z)
Zinc						
Casting Quench	15(5.35/x)	38(5.35/x)	10(5.35/x)	30(5.35/x)	(3)	(3)
Die Casting	15(1.04/x)	38(1.04/x)	10(1.04/x)	30(1.04/x)	.3(1.04/x)	.86(1.04/x)
Melting Furnace Scrubber	15(.243/y)	38(.243/y)	10(.243/y)	30(.243/y)	.3(.243/y)	.86(.243/y)
Mold Cooling	15(47.3/x)	38(47.3/x)	10(47.3/x)	30(47.3/x)	(3)	(3)

* All 30-Day Maximum and Daily Maximum limitations are in mg/l units. The annual average limitations are in units of kg/1000 kkg (lb per million lb) of metal poured except for the Wet Sand Reclamation, Dust Collection Scrubber, and Melting Furnace Scrubber process segments. In the case of the latter two process segments, the annual average limitations are in units of kg/62.3 million Sm^3 (lb per billion SCF) of air scrubbed; in the case of the former process segment, the limitations are in units of kg/1000 kkg (lb per million lb) of sand reclaimed.

(1) Total Phenols - Phenols as measured by the 4-aminoantipyrene method (4AAP).

(2) Within the range of 7.0 to 10.0 at all times.

(3) Not regulated at BPT for this process segment.

X = Actual normalized process wastewater flow (in gallons per 1,000 pounds of metal poured) for the specific plant.

Y = Actual normalized process wastewater flow (in gallons per 1,000 SCF of air scrubbed) for the specific plant.

Z = Actual normalized process wastewater flow (in gallons per 1,000 pounds of sand reclaimed) for the specific plant.

TABLE II-2 (Continued)

BPT LIMITATIONS* COVERING NON-CONTINUOUS DIRECT WASTEWATER DISCHARGES

Subcategory and Process Segment	Copper 30-Day Max.	Copper Daily Max.	Lead 30-Day Max.	Lead Daily Max.	Zinc 30-Day Max.	Zinc Daily Max.	pH
Ferrous							
Casting Cleaning	.16(5.35/x)	.29(5.35/x)	.39(5.35/x)	.79(5.35/x)	.56(5.35/x)	1.47(5.35/x)	(2)
Casting Quench	.16(5.7/x)	.29(5.7/x)	.39(5.7/x)	.79(5.7/x)	.56(5.7/x)	1.47(5.7/x)	(2)
Dust Collection Scrubber	.16(.09/y)	.29(.09/y)	.39(.09/y)	.79(.09/y)	.56(.09/y)	1.47(.09/y)	(2)
Grinding Scrubber	No Discharge of Pollutants						
Investment Casting	.16(1320/x)	.29(1320/x)	.39(1320/x)	.79(1320/x)	.56(1320/x)	1.47(1320/x)	(2)
Melting Furnace Scrubber	.16(.42/y)	.29(.42/y)	.39(.42/y)	.79(.42/y)	.56(.42/y)	1.47(.42/y)	(2)
Mold Cooling	.16(17.7/x)	.29(17.7/x)	.39(17.7/x)	.79(17.7/x)	.56(17.7/x)	1.47(17.7/x)	(2)
Slag Quench	.16(21.8/x)	.29(21.8/x)	.39(21.8/x)	.79(21.8/x)	.56(21.8/x)	1.47(21.8/x)	(2)
Wet Sand Reclamation	.16(89.5/z)	.29(89.5/z)	.39(89.5/z)	.79(89.5/z)	.56(89.5/z)	1.47(89.5/z)	(2)
Zinc							
Casting Quench	.42(5.35/x)	.77(5.35/x)	.39(5.35/x)	.79(5.35/x)	.43(5.35/x)	1.14(5.35/x)	(2)
Die Casting	.42(1.04/x)	.77(1.04/x)	.39(1.04/x)	.79(1.04/x)	.43(1.04/x)	1.14(1.04/x)	(2)
Melting Furnace Scrubber	.42(.243/y)	.77(.243/y)	.39(.243/y)	.79(.243/y)	.43(.243/y)	1.14(.243/y)	(2)
Mold Cooling	.42(47.3/x)	.77(47.3/x)	.39(47.3/x)	.79(47.3/x)	.43(47.3/x)	1.14(47.3/x)	(2)

* All 30-Day Maximum and Daily Maximum limitations are in mg/l units. The annual average limitations are in units of kg/1000 kkg (lb per million lb) of metal poured except for the Wet Sand Reclamation, Dust Collection Scrubber, and Melting Furnace Scrubber process segments. In the case of the latter two process segments, the annual average limitations are in units of kg/62.3 million Sm^3 (lb per billion SCF) of air scrubbed; in the case of the former process segment, the limitations are in units of kg/1000 kkg (lb per million lb) of sand reclaimed.

(1) Total Phenols - Phenols as measured by the 4-aminoantipyrene method (4AAP).

(2) Within the range of 7.0 to 10.0 at all times.

(3) Not regulated at BPT for this process segment.

X = Actual normalized process wastewater flow (in gallons per 1,000 pounds of metal poured) for the specific plant.

Y = Actual normalized process wastewater flow (in gallons per 1,000 SCF of air scrubbed) for the specific plant.

Z = Actual normalized process wastewater flow (in gallons per 1,000 pounds of sand reclaimed) for the specific plant.

TABLE II-3

BAT LIMITATIONS* COVERING CONTINUOUS DIRECT DISCHARGES

Subcategory and Process Segment	Phenols(1) 30-Day Max.	Phenols(1) Daily Max.	Copper 30-Day Max.	Copper Daily Max.	Lead 30-Day Max.	Lead Daily Max.	Zinc 30-Day Max.	Zinc Daily Max.	pH
Aluminum									
Casting Cleaning	(3)	(3)	.0421	.0771	.039	.0791	.0431	.114	(2)
Casting Quench	(3)	(3)	.0051	.0093	.0047	.0096	.0052	.0138	(2)
Die Casting	.0026	.0074	.0036	.0066	.0034	.0068	.0037	.0098	(2)
Dust Collection Scrubber	.09	.258	.126	.231	.117	.237	.129	.343	(2)
Grinding Scrubber	----------	----------	No Discharge of Pollutants	----------	----------	----------	----------	----------	
Investment Casting	(3)	(3)	4.63	8.48	4.3	8.7	4.74	12.6	(2)
Melting Furnace Scrubber	1.17	3.36	1.64	3.01	1.52	3.09	1.68	4.45	(2)
Mold Cooling	(3)	(3)	.162	.297	.151	.305	.166	.44	(2)
Copper									
Casting Quench	(3)	(3)	.0168	.0307	.0104	.0211	.0116	.0303	(2)
Direct Chill Casting	(3)	(3)	.506	.928	.314	.639	.35	.916	(2)
Dust Collection Scrubber	.215	.617	.301	.553	.187	.38	.208	.545	(2)
Grinding Scrubber	----------	----------	No Discharge of Pollutants	----------	----------	----------	----------	----------	
Investment Casting	(3)	(3)	4.63	8.48	2.86	5.84	3.19	8.37	(2)
Melting Furnace Scrubber	.706	2.02	.988	1.81	.612	1.25	.673	1.79	(2)
Mold Cooling	(3)	(3)	.214	.392	.132	.27	.148	.387	(2)

* All limitations are in units of kg/1000 kkg (lb per million lb) of metal poured except for the Wet Sand Reclamation, Dust Collection Scrubber, and Melting Furnace Scrubber process segments. In the case of the latter two process segments, the limitations are in units of kg/62.3 million Sm^3 (lb per billion SCF) of air scrubbed; in the case of the former process segment, the limitations are in units of kg/1000 kkg (lb per million lb) of sand reclaimed.

(1) Total Phenols - Phenols as measured by the 4-aminoantipyrene method (4AAP).

(2) Within the range of 7.0 to 10.0 at all times.

(3) Not regulated at BAT for this process segment.

TABLE II-3 (Continued)

BAT LIMITATIONS* COVERING CONTINUOUS DIRECT DISCHARGES

Subcategory and Process Segment	Phenols(1) 30-Day Max.	Phenols(1) Daily Max.	Copper 30-Day Max.	Copper Daily Max.	Lead 30-Day Max.	Lead Daily Max.	Zinc 30-Day Max.	Zinc Daily Max.	pH
Ferrous(4)									
Casting Cleaning	(3)	(3)	.0071	.0129	.0116	.0237	.0165	.0437	(2)
Casting Quench	(3)	(3)	.0076	.0138	.0124	.0252	.0176	.0466	(2)
Dust Collection Scrubber	.225	.646	.12	.218	.195	.398	.278	.736	(2)
Grinding Scrubber	----------No Discharge of Pollutants----------								
Investment Casting	(3)	(3)	1.76	3.19	2.86	5.84	4.07	10.8	(2)
Melting Furnace Scrubber	1.05	3.01	.561	1.02	.911	1.86	1.3	3.44	(2)
Mold Cooling	(3)	(3)	.0236	.0428	.0384	.0783	.0546	.145	(2)
Slag Quench	(3)	(3)	.0291	.0527	.0473	.0964	.0673	.178	(2)
Wet Sand Reclamation	.224	.642	.12	.217	.194	.396	.276	.732	(2)
Ferrous(5)									
Casting Cleaning	(3)	(3)	.0071	.0129	.0174	.0353	.025	.0656	(2)
Casting Quench	(3)	(3)	.0076	.0138	.0185	.0376	.0266	.0699	(2)
Dust Collection Scrubber	.225	.656	.12	.218	.293	.593	.421	1.1	(2)
Grinding Scrubber	----------No Discharge of Pollutants----------								
Investment Casting	(3)	(3)	1.76	3.19	4.3	8.7	6.17	16.2	(2)
Melting Furnace Scrubber	1.05	3.01	.561	1.02	1.37	2.77	1.96	5.15	(2)
Mold Cooling	(3)	(3)	.0236	.0428	.0576	.117	.0827	.217	(2)
Slag Quench	(3)	(3)	.0291	.0527	.0709	.144	.102	.267	(2)
Wet Sand Reclamation	.224	.642	.12	.217	.291	.59	.418	1.1	(2)

* All limitations are in units of kg/1000 kkg (lb per million lb) of metal poured except for the Wet Sand Reclamation, Dust Collection Scrubber, and Melting Furnace Scrubber process segments. In the case of the latter two process segments, the limitations are in units of kg/62.3 million Sm^3 (lb per billion SCF) of air scrubbed; in the case of the former process segment, the limitations are in units of kg/1000 kkg (lb per million lb) of sand reclaimed.

(1) Total Phenols - Phenols as measured by the 4-aminoantipyrene method (4AAP).

(2) Within the range of 7.0 to 10.0 at all times.

(3) Not regulated at BAT for this process segment.

(4) Applicable to plants that cast primarily malleable iron where greater than 3,557 tons of metal are poured per year and to plants that cast primarily ductile or gray iron.

TABLE II-3 (Continued)

BAT LIMITATIONS* COVERING CONTINUOUS DIRECT DISCHARGES

Subcategory and Process Segment	Phenols(1) 30-Day Max.	Phenols(1) Daily Max.	Copper 30-Day Max.	Copper Daily Max.	Lead 30-Day Max.	Lead Daily Max.	Zinc 30-Day Max.	Zinc Daily Max.	pH
Ferrous(4)									
Casting Cleaning	(3)	(3)	.0071	.0129	.0116	.0237	.0165	.0437	(2)
Casting Quench	(3)	(3)	.0076	.0138	.0124	.0252	.0176	.0466	(2)
Dust Collection Scrubber	.225	.646	.12	.218	.195	.398	.278	.736	(2)
Grinding Scrubber	----------No Discharge of Pollutants----------								
Investment Casting	(3)	(3)	1.76	3.19	2.86	5.84	4.07	10.8	(2)
Melting Furnace Scrubber	1.05	3.01	.561	1.02	.911	1.86	1.3	3.44	(2)
Mold Cooling	(3)	(3)	.0236	.0428	.0384	.0783	.0546	.145	(2)
Slag Quench	(3)	(3)	.0291	.0527	.0473	.0964	.0673	.178	(2)
Wet Sand Reclamation	.224	.642	.12	.217	.194	.396	.276	.732	(2)
Ferrous(5)									
Casting Cleaning	(3)	(3)	.0071	.0129	.0174	.0353	.025	.0656	(2)
Casting Quench	(3)	(3)	.0076	.0138	.0185	.0376	.0266	.0699	(2)
Dust Collection Scrubber	.225	.656	.12	.218	.293	.593	.421	1.1	(2)
Grinding Scrubber	----------No Discharge of Pollutants----------								
Investment Casting	(3)	(3)	1.76	3.19	4.3	8.7	6.17	16.2	(2)
Melting Furnace Scrubber	1.05	3.01	.561	1.02	1.37	2.77	1.96	5.15	(2)
Mold Cooling	(3)	(3)	.0236	.0428	.0576	.117	.0827	.217	(2)
Slag Quench	(3)	(3)	.0291	.0527	.0709	.144	.102	.267	(2)
Wet Sand Reclamation	.224	.642	.12	.217	.291	.59	.418	1.1	(2)

* All limitations are in units of kg/1000 kkg (lb per million lb) of metal poured except for the Wet Sand Reclamation, Dust Collection Scrubber, and Melting Furnace Scrubber process segments. In the case of the latter two process segments, the limitations are in units of kg/62.3 million Sm^3 (lb per billion SCF) of air scrubbed; in the case of the former process segment, the limitations are in units of kg/1000 kkg (lb per million lb) of sand reclaimed.

(1) Total Phenols - Phenols as measured by the 4-aminoantipyrene method (4AAP).
(2) Within the range of 7.0 to 10.0 at all times.
(3) Not regulated at BAT for this process segment.
(4) Applicable to plants that cast primarily malleable iron where greater than 3,557 tons of metal are poured per year and to plants that cast primarily ductile or gray iron.
(5) Applicable to plants that cast primarily malleable iron where equal to or less than 3,557 tons of metal are poured per year and to plants that cast primarily steel.

TABLE II-3 (Continued)

BAT LIMITATIONS* COVERING CONTINUOUS DIRECT DISCHARGES

Subcategory and Process Segment	Phenols(1) 30-Day Max.	Phenols(1) Daily Max.	Copper 30-Day Max.	Copper Daily Max.	Lead 30-Day Max.	Lead Daily Max.	Zinc 30-Day Max.	Zinc Daily Max.	pH
Zinc									
Casting Quench	(3)	(3)	.0187	.0344	.0116	.0237	.0129	.0339	(2)
Die Casting	.0026	.0074	.0036	.0066	.0022	.0046	.0025	.0066	(2)
Melting Furnace Scrubber	.608	1.74	.852	1.56	.527	1.07	.588	1.54	(2)
Mold Cooling	(3)	(3)	.166	.304	.103	.209	.114	.3	(2)

* All limitations are in units of kg/1000 kkg (lb per million lb) of metal poured except for the Wet Sand Reclamation, Dust Collection Scrubber, and Melting Furnace Scrubber process segments. In the case of the latter two process segments, the limitations are in units of kg/62.3 million Sm^3 (lb per billion SCF) of air scrubbed; in the case of the former process segment, the limitations are in units of kg/1000 kkg (lb per million lb) of sand reclaimed.

(1) Total Phenols - Phenols as measured by the 4-aminoantipyrene method (4AAP).

(2) Within the range of 7.0 to 10.0 at all times.

(3) Not regulated at BAT for this process segment.

TABLE II-4

BAT LIMITATIONS* COVERING NON-CONTINUOUS DIRECT WASTEWATER DISCHARGES

Subcategory and Process Segment	Phenols(1) 30-Day Max.	Phenols(1) Daily Max.	Copper 30-Day Max.	Copper Daily Max.	Lead 30-Day Max.	Lead Daily Max.	Zinc 30-Day Max.	Zinc Daily Max.	pH
Aluminum									
Casting Cleaning	(3)	(3)	.42(12/x)	.77(12/x)	.39(12/x)	.79(12/x)	.43(12/x)	1.14(12/x)	(2)
Casting Quench	(3)	(3)	.42(1.45/x)	.77(1.45/x)	.39(1.45/x)	.79(1.45/x)	.43(1.45/x)	1.14(1.45/x)	(2)
Die Casting	.3(1.04/x)	.86(1.04/x)	.42(1.04/x)	.77(1.04/x)	.39(1.04/x)	.79(1.04/x)	.43(1.04/x)	1.14(1.04/x)	(2)
Dust Collection Scrubber	.3(.036/y)	.86(.036/y)	.42(.036/y)	.77(.036/y)	.39(.036/y)	.79(.036/y)	.43(.036/y)	1.14(.036/y)	(2)
Grinding Scrubber	No Discharge of Pollutants								
Investment Casting	(3)	(3)	.42(1320/x)	.77(1320/x)	.39(1320/x)	.79(1320/x)	.43(1320/x)	1.14(1320/x)	(2)
Melting Furnace Scrubber	.3(.468/y)	.86(.468/y)	.42(.468/y)	.77(.468/y)	.39(.468/y)	.79(.468/y)	.43(.468/y)	1.14(.468/y)	(2)
Mold Cooling	(3)	(3)	.42(46.3/x)	.77(46.3/x)	.39(46.3/x)	.79(46.3/x)	.43(46.3/x)	1.14(46.3/x)	(2)
Copper									
Casting Quench	(3)	(3)	.42(4.8/x)	.77(4.8/x)	.26(4.8/x)	.53(4.8/x)	.29(4.8/x)	.76(4.8/x)	(2)
Direct Chill Casting	(3)	(3)	.42(145/x)	.77(145/x)	.26(145/x)	.53(145/x)	.29(145/x)	.76(145/x)	(2)
Dust Collection Scrubber	.3(.086/y)	.86(.086/y)	.42(.086/y)	.77(.086/y)	.26(.086/y)	.53(.086/y)	.29(.086/y)	.76(.086/y)	(2)
Grinding Scrubber	No Discharge of Pollutants								
Investment Casting	(3)	(3)	.42(1320/x)	.77(1320/x)	.26(1320/x)	.53(1320/x)	.29(1320/x)	.76(1320/x)	(2)
Melting Furnace Scrubber	.3(.282/y)	.86(.282/y)	.42(.282/y)	.77(.282/y)	.26(.282/y)	.53(.282/y)	.29(.282/y)	.76(.282/y)	(2)
Mold Cooling	(3)	(3)	.42(61/x)	.77(61/x)	.26(61/x)	.53(61/x)	.29(61/x)	.76(61/x)	(2)

* All 30-Day Maximum and Daily Maximum limitations are in mg/l units. The annual average limitations are in units of kg/1000 kkg (lb per million lb) of metal poured except for the Wet Sand Reclamation, Dust Collection Scrubber, and Melting Furnace Scrubber process segments. In the case of the latter two process segments, the annual average limitations are in units of kg/62.3 million Sm^3 (lb per billion SCF) of air scrubbed; in the case of the former process segment, the limitations are in units of kg/1000 kkg (lb per million lb) of sand reclaimed.

(1) Total Phenols - Phenols as measured by the 4-aminoantipyrene method (4AAP)

(2) Within the range of 7.0 to 10.0 at all times.

(3) Not regulated at BAT for this process segment.

X = Actual normalized process wastewater flow (in gallons per 1,000 pounds of metal poured) for the specific plant.

Y = Actual normalized process wastewater flow (in gallons per 1,000 SCF of air scrubbed) for the specific plant.

TABLE II-4 (Continued)

BAT LIMITATIONS* COVERING NON-CONTINUOUS DIRECT WASTEWATER DISCHARGES

Subcategory and Process Segment	Phenols(1) 30-Day Max.	Phenols(1) Daily Max.	Copper 30-Day Max.	Copper Daily Max.	Lead 30-Day Max.	Lead Daily Max.	Zinc 30-Day Max.	Zinc Daily Max.	pH
Ferrous(4)									
Casting Cleaning	(3)	(3)	.16(5.35/x)	.29(5.35/x)	.26(5.35/x)	.53(5.35/x)	.37(5.35/x)	.98(5.35/x)	(2)
Casting Quench	(3)	(3)	.16(5.7/x)	.29(5.7/x)	.26(5.7/x)	.53(5.7/x)	.37(5.7/x)	.98(5.7/x)	(2)
Dust Collection Scrubber	.3(.09/y)	.86(.09/y)	.16(.09/y)	.29(.09/y)	.26(.09/y)	.53(.09/y)	.37(.09/y)	.98(.09/y)	(2)
Grinding Scrubber	No Discharge of Pollutants								
Investment Casting	(3)	(3)	.16(1320/x)	.29(1320/x)	.26(1320/x)	.53(1320/x)	.37(1320/x)	.98(1320/x)	(2)
Melting Furnace Scrubber	.3(.42/y)	.86(.42/y)	.16(.42/y)	.29(.42/y)	.26(.42/y)	.53(.42/y)	.37(.42/y)	.98(.42/y)	(2)
Mold Cooling	(3)	(3)	.16(17.7/x)	.29(17.7/x)	.26(17.7/x)	.53(17.7/x)	.37(17.7/x)	.98(17.7/x)	(2)
Slag Quench	(3)	(3)	.16(21.8/x)	.29(21.8/x)	.26(21.8/x)	.53(21.8/x)	.37(21.8/x)	.98(21.8/x)	(2)
Wet Sand Reclamation	.3(89.5/z)	.86(89.5/z)	.16(89.5/z)	.29(89.5/z)	.29(89.5/z)	.53(89.5/z)	.37(89.5/z)	.98(89.5/z)	(2)

* All 30-Day Maximum and Daily Maximum limitations are in mg/l units. The annual average limitations are in units of kg/1000 kkg (lb per million lb) of metal poured except for the Wet Sand Reclamation, Dust Collection Scrubber, and Melting Furnace Scrubber process segments. In the case of the latter two process segments, the annual average limitations are in units of kg/62/3 million Sm^3 (lb per billion SCF) of air scrubbed; in the case of the former process segment, the limitations are in units of kg/1000 kkg (lb per million lb) of sand reclaimed.

(1) Total Phenols - Phenols as measured by the 4-aminoantipyrene method (4AAP).

(2) Within the range of 7.0 to 10.0 at all times.

(3) Not regulated at BAT for this process segment.

(4) Applicable to plants that cast primarily malleable iron where greater than 3,557 tons of metal are poured per year and to plants that cast primarily ductile or gray iron.

X = Actual normalized process wastewater flow (in gallons per 1,000 pounds of metal poured) for the specific plant.

Y = Actual normalized process wastewater flow (in gallons per 1,000 SCF of air scrubbed) for the specific plant.

Z = Actual normalized process wastewater flow (in gallons per 1,000 of sand reclaimed) for the specific plant.

TABLE II-4 (Continued)

BAT LIMITATIONS* COVERING NON-CONTINUOUS DIRECT WASTEWATER DISCHARGES

Subcategory and Process Segment	Phenols(1) 30-Day Max.	Phenols(1) Daily Max.	Copper 30-Day Max.	Copper Daily Max.	Lead 30-Day Max.	Lead Daily Max.	Zinc 30-Day Max.	Zinc Daily Max.	pH
Ferrous(5)									
Casting Cleaning	(3)	(3)	.16(5.35/x)	.29(5.35/x)	.39(5.35/x)	.79(5.35/x)	.56(5.35/x)	1.47(5.35/x)	(2)
Casting Quench	(3)	(3)	.16(5.7/x)	.29(5.7/x)	.39(5.7/x)	.79(5.7/x)	.56(5.7/x)	1.47(5.7/x)	(2)
Dust Collection Scrubber	.3(.09/y)	.86(.09/y)	.16(.09/y)	.29(.09/y)	.39(.09/y)	.79(.09/y)	.56(.09/y)	1.47(.09/y)	(2)
Grinding Scrubber	No Discharge of Pollutants								
Investment Casting	(3)	(3)	.16(1320/x)	.29(1320/x)	.39(1320/x)	.79(1320/x)	.56(1320/x)	1.47(1320/x)	(2)
Melting Furnace Scrubber	.3(.42/y)	.86(.42/y)	.16(.42/y)	.29(.42/y)	.39(.42/y)	.79(.42/y)	.56(.42/y)	1.47(.42/y)	(2)
Mold Cooling	(3)	(3)	.16(17.7/x)	.29(17.7/x)	.39(17.7/x)	.79(17.7/x)	.56(17.7/x)	1.47(17.7/x)	(2)
Slag Quench	(3)	(3)	.16(21.8/x)	.29(21.8/x)	.39(21.8/x)	.79(21.8/x)	.56(21.8/x)	1.47(21.8/x)	(2)
Wet Sand Reclamation	.3(89.5/z)	.86(89.5/z)	.16(89.5/z)	.29(89.5/z)	.39(89.5/z)	.79(89.5/z)	.56(89.5/z)	1.47(89.5/z)	(2)
Zinc									
Casting Quench	(3)	(3)	.42(5.35/x)	.77(5.35/x)	.26(5.35/x)	.53(5.35/x)	.29(5.35/x)	.76(5.35/x)	(2)
Die Casting	.3(1.04/x)	.86(1.04/x)	.42(1.04/x)	.77(1.04/x)	.26(1.04/x)	.53(1.04/x)	.29(1.04/x)	.76(1.04/x)	(2)
Melting Furnace Scrubber	.3(.243/y)	.86(.243/y)	.42(.243/y)	.77(.243/y)	.26(.243/y)	.53(.243/y)	.29(.243/y)	.76(.243/y)	(2)
Mold Cooling	(3)	(3)	.42(47.3/x)	.77(47.3/x)	.26(47.3/x)	.53(47.3/x)	.29(47.3/x)	.76(47.3/x)	(2)

* All 30-Day Maximum and Daily Maximum limitations are in mg/l units. The annual average limitations are in units of kg/1000 kkg (lb per million lb) of metal poured except for the Wet Sand Reclamation, Dust Collection Scrubber, and Melting Furnace Scrubber process segments. In the case of the latter two process segments, the annual average limitations are in units of kg/62.3 million Sm^3 (lb per billion SCF) of air scrubbed; in the case of the former process segment, the limitations are in units of kg/1000 kkg (lb per million lb) of sand reclaimed.

(1) Total Phenols - Phenols as measured by the 4-aminoantipyrene method (4AAP).

(2) Within the range of 7.0 to 10.0 at all times.

(3) Not regulated at BAT for this process segment.

(5) Applicable to plants that cast primarily malleable iron where equal to or less than 3,557 tons of metal are poured per year and to plants that cast primarily steel.

X = Actual normalized process wastewater flow (in gallons per 1,000 pounds of metal poured) for the specific plant.

Y = Actual normalized process wastewater flow (in gallons per 1,000 SCF of air scrubbed) for the specific plant.

Z = Actual normalized process wastewater flow (in gallons per 1,000 of sand reclaimed) for the specific plant.

TABLE II-5

NSPS LIMITATIONS* COVERING CONTINUOUS DIRECT DISCHARGES

Subcategory and Process Segment	TSS 30-Day Max.	TSS Daily Max.	Oil & Grease 30-Day Max.	Oil & Grease Daily Max.	Phenols(1) 30-Day Max.	Phenols(1) Daily Max.	Copper 30-Day Max.	Copper Daily Max.	Lead 30-Day Max.	Lead Daily Max.	Zinc 30-Day Max.	Zinc Daily Max.	pH
Aluminum													
Casting Cleaning	1.50	3.80	1.0	3.0	(3)	(3)	.0421	.0771	.039	.D791	.0431	.114	(2)
Casting Quench	.182	.46	.121	.363	(3)	(3)	.0051	.0093	.0047	.0096	.0052	.0138	(2)
Die Casting	.13	.33	.0864	.259	.0026	.0074	.0036	.0066	.0034	.0068	.0037	.0098	(2)
Dust Collection Scrubber	4.51	11.4	3.0	9.01	.09	.258	.126	.231	.117	.237	.129	.343	(2)
Grinding Scrubber	No Discharge of Pollutants												
Investment Casting	165	419	110	330	(3)	(3)	4.63	8.48	4.3	8.7	4.74	12.6	(2)
Melting Furnace Scrubber	58.6	148	39.1	117	1.17	3.36	1.64	3.01	1.52	3.09	1.68	4.45	(2)
Mold Cooling	5.79	14.7	3.86	11.6	(3)	(3)	.162	.297	.151	.305	.166	.44	(2)
Copper													
Casting Quench	.479	.598	.399	1.2	(3)	(3)	.0168	.0307	.0104	.0211	.0116	.0303	(2)
Direct Chill Casting	14.5	18.1	12.1	36.2	(3)	(3)	.506	.928	.314	.639	.35	.916	(2)
Dust Collection Scrubber	8.61	10.8	7.18	21.5	.215	.617	.301	.553	.187	.38	.208	.545	(2)
Grinding Scrubber	No Discharge of Pollutants												
Investment Casting	132	165	110	330	(3)	(3)	4.63	8.48	2.86	5.84	3.19	8.37	(2)
Melting Furnace Scrubber	28.2	35.3	23.5	70.6	.706	2.02	.988	1.81	.612	1.25	.673	1.79	(2)
Mold Cooling	6.11	7.63	5.09	15.3	(3)	(3)	.214	.392	.132	.27	.148	.387	(2)

* All limitations are in units of kg/1000 kkg (lb per million lb) of metal poured except for the Wet Sand Reclamation, Dust Collection Scrubber, and Melting Furnace Scrubber process segments. In the case of the latter two process segments, the limitations are in units of kg/62.3 million Sm^3 (lb per billion SCF) of air scrubbed; in the case of the former process segment, the limitations are in units of kg/1000 kkg (lb per million lb) of sand reclaimed.

(1) Total Phenols - Phenols as measured by the 4-aminoantipyrene method (4AAP)

(2) Within the range of 7.0 to 10.0 at all times.

(3) Not regulated at NSPS for this process segment.

TABLE II-5 (Continued)

NSPS LIMITATIONS* COVERING CONTINUOUS DIRECT DISCHARGES

Subcategory and Process Segment	TSS 30-Day Max.	TSS Daily Max.	Oil & Grease 30-Day Max.	Oil & Grease Daily Max.	Phenols(1) 30-Day Max.	Phenols(1) Daily Max.	Copper 30-Day Max.	Copper Daily Max.	Lead 30-Day Max.	Lead Daily Max.	Zinc 30-Day Max.	Zinc Daily Max.	pH
Ferrous(4)													
Casting Cleaning	.536	.67	.446	1.34	(3)	(3)	.0071	.0129	.0116	.0237	.0165	.0437	(2)
Casting Quench	.571	.713	.476	1.43	(3)	(3)	.0076	.0138	.0124	.0252	.0176	.0466	(2)
Dust Collection Scrubber	9.01	11.3	7.51	22.5	.225	.646	.12	.218	.195	.398	.278	.736	(2)
Grinding Scrubber	----------	----------	----------	----------	No Discharge of Pollutants	----------	----------	----------	----------	----------	----------	----------	
Investment Casting	132	165	110	330	(3)	(3)	1.76	3.19	2.86	5.84	4.07	10.8	(2)
Melting Furnace Scrubber	42.1	52.6	35	105	1.05	3.01	.561	1.02	.911	1.86	1.3	3.44	(2)
Mold Cooling	1.77	2.22	1.48	4.43	(3)	(3)	.0236	.0428	.0384	.0783	.0546	.145	(2)
Slag Quench	2.18	2.73	1.82	5.46	(3)	(3)	.0291	.0527	.0473	.0964	.0673	.178	(2)
Wet Sand Reclamation	8.96	11.2	7.47	22.4	.224	.642	.12	.217	.194	.396	.276	.732	(2)

* All limitations are in units of kg/1000 kkg (lb per million lb) of metal poured except for the Wet Sand Reclamation, Dust Collection Scrubber, and Melting Furnace Scrubber process segments. In the case of the latter two process segments, the limitations are in units of kg/62.3 Sm^3 (lb per billion SCF) of air scrubbed; in the case of the former process segment, the limitations are in units of kg/1000 kkg (lb per million lb) of sand reclaimed.

(1) Total Phenols - Phenols as measured by the 4-aminoantipyrene method (4AAP)

(2) Within the range of 7.0 to 10.0 at all times.

(3) Not regulated at NSPS for this process segment

(4) Applicable to plants that cast primarily malleable iron where greater than 3,557 tons of metal are poured per year and to plants that cast primarily ductile or gray iron.

TABLE II-5 (Continued)

NSPS LIMITATIONS* COVERING CONTINUOUS DIRECT DISCHARGES

Subcategory and Process Segment	TSS 30-Day Max.	TSS Daily Max.	Oil & Grease 3D-Day Max.	Oil & Grease Daily Max.	Phenols(1) 30-Day Max.	Phenols(1) Daily Max.	Copper 30-Day Max.	Copper Daily Max.	Lead 3D-Day Max.	Lead Daily Max.	Zinc 30-Day Max.	Zinc Daily Max.	pH
Ferrous(5)													
Casting Cleaning	.67	1.7	.446	1.34	(3)	(3)	.0071	.0129	.0174	.0353	.025	.0656	(2)
Casting Quench	.713	1.81	.476	1.43	(3)	(3)	.0076	.0138	.0185	.0376	.0266	.0699	(2)
Dust Collection Scrubber	11.3	28.5	7.51	22.5	.225	.656	.12	.218	.293	.593	.421	1.1	(2)
Grinding Scrubber	No Discharge of Pollutants												
Investment Casting	165	419	110	330	(3)	(3)	1.76	3.19	4.3	8.7	6.17	16.2	(2)
Melting Furnace Scrubber	52.6	133	35	105	1.05	3.01	.561	1.02	1.37	2.77	1.96	5.15	(2)
Mold Cooling	2.22	5.61	1.48	4.43	(3)	(3)	.0236	.0428	.0576	.117	.0827	.217	(2)
Slag Quench	2.73	6.91	1.82	5.46	(3)	(3)	.0291	.0527	.0709	.144	.102	.267	(2)
Wet Sand Reclamation	11.2	28.4	7.47	22.4	.224	.642	.12	.217	.291	.59	.418	1.1	(2)
Zinc													
Casting Quench	.536	.67	.446	1.34	(3)	(3)	.0187	.0344	.0116	.0237	.0129	.0339	(2)
Die Casting	.104	.13	.0864	.259	.0026	.0074	.0036	.0066	.0022	.0046	.0025	.0066	(2)
Melting Furnace Scrubber	24.3	30.4	20.3	60.8	.608	1.74	.852	1.56	.527	1.07	.588	1.54	(2)
Mold Cooling	4.73	5.91	3.94	11.8	(3)	(3)	.166	.304	.103	.209	.114	.3	(2)

* All limitations are in units of kg/1000 kkg (lb per million lb) of metal poured except for the Wet Sand Reclamation, Dust Collection Scrubber, and Melting Furnace Scrubber process segments. In the case of the latter two process segments, the limitations are in units of kg/62.3 million Sm^3 (lb per billion SCF) of air scrubbed; in the case of the former process segment, the limitations are in units of kg/1000 kkg (lb per million lb) of sand reclaimed.

(1) Total Phenols - Phenols as measured by the 4-aminoantipyrene method (4AAP)

(2) Within the range of 7.0 to 10.0 at all times

(3) Not regulated at NSPS for this process segment

(5) Applicable to plants that cast primarily malleable iron where equal to or less than 3,557 tons of metal are poured per year and to plants that cast primarily steel.

TABLE II-6

NSPS LIMITATIONS* COVERING NON-CONTINUOUS DIRECT WASTEWATER DISCHARGES

Subcategory and Process Segment	TSS 30-Day Max.	TSS Daily Max.	Oil & Grease 30-Day Max.	Oil & Grease Daily Max.	Phenols(1) 30-Day Max.	Phenols(1) Daily Max.
Aluminum						
Casting Cleaning	15(12/x)	38(12/x)	10(12/x)	30(12/x)	(3)	(3)
Casting Quench	15(1.45/x)	38(1.45/x)	10(1.45/x)	30(1.45/x)	(3)	(3)
Die Casting	15(1.04/x)	38(1.04/x)	10(1.04/x)	30(1.04/x)	0.3(1.04/x)	.86(1.04/x)
Dust Collection Scrubber	15(.036/y)	38(.036/y)	10(.036/y)	30(.036/y)	0.3(.036/y)	.86(.036/y)
Grinding Scrubber	----------No Discharge of Pollutants----------					
Investment Casting	15(1320/x)	38(1320/x)	10(1320/x)	30(1320/x)	(3)	(3)
Melting Furnace Scrubber	15(.468/y)	38(.468/y)	10(.468/y)	30(.468/y)	0.3(.468/y)	.86(.468/y)
Mold Cooling	15(46.3/x)	38(46.3/x)	10(46.3/x)	30(46.3/x)	(3)	(3)
Copper						
Casting Quench	12(4.8/x)	15(4.8/x)	10(4.8/x)	30(4.8/x)	(3)	(3)
Direct Chill Casting	12(145/x)	15(145/x)	10(145/x)	30(145/x)	(3)	(3)
Dust Collection Scrubber	12(.086/y)	15(.086/y)	10(.086/y)	30(.086/y)	0.3(.086/y)	.86(.086/y)
Grinding Scrubber	----------No Discharge of Pollutants----------					
Investment Casting	12(1320/x)	15(1320/x)	10(1320/x)	30(1320/x)	(3)	(3)
Melting Furnace Scrubber	12(.282/y)	15(.282/y)	10(.282/y)	30(.282/y)	0.3(.282/y)	.86(.282/y)
Mold Cooling	12(61/x)	15(61/x)	10(61/x)	30(61/x)	(3)	(3)

* All 30-Day Maximum and Daily Maximum limitations are in mg/l units. The annual average limitations are in units of kg/1000 kkg (lb per million lb) of metal poured except for the Wet Sand Reclamation, Dust Collection Scrubber, and Melting Furnace Scrubber process segments. In the case of the latter two process segments, the annual average limitations are in units of kg/62.3 million Sm^3 (lb per billion SCF) of air scrubbed; in the case of the former process segment, the limitations are in units of kg/1000 kkg (lb per million lb) of sand reclaimed.

(1) Total Phenols - Phenols as measured by the 4-aminoantipyrene method (4AAP).

(2) Within the range of 7.0 to 10.0 at all times.

(3) Not regulated at NSPS for this process segment.

X = Actual normalized process wastewater flow (in gallons per 1,000 pounds of metal poured) for the specific plant.

Y = Actual normalized process wastewater flow (in gallons per 1,000 SCF of air scrubbed) for the specific plant.

TABLE II-6 (Continued)

NSPS LIMITATIONS* COVERING NON-CONTINUOUS DIRECT WASTEWATER DISCHARGES

Subcategory and Process Segment	Copper 30-Day Max.	Copper Daily Max.	Lead 30-Day Max.	Lead Daily Max.	Zinc 30-Day Max.	Zinc Daily Max.	pH
Aluminum							
Casting Cleaning	.42(12/x)	.77(12/x)	.39(12/x)	.79(12/x)	.43(12/x)	1.14(12/x)	(2)
Casting Quench	.42(1.45/x)	.77(1.45/x)	.39(1.45/x)	.79(1.45/x)	.43(1.45/x)	1.14(1.45/x)	(2)
Die Casting	.42(1.04/x)	.77(1.04/x)	.39(1.04/x)	.79(1.04/x)	.43(1.04/x)	1.14(1.04/x)	(2)
Dust Collection Scrubber	.42(.036/y)	.77(.036/y)	.39(.036/y)	.79(.036/y)	.43(.036/y)	1.14(.036/y)	(2)
Grinding Scrubber	----------No Discharge of Pollutants----------						
Investment Casting	.42(1320/x)	.77(1320/x)	.39(1320/x)	.79(1320/x)	.43(1320/x)	1.14(1320/x)	(2)
Melting Furnace Scrubber	.42(.468/y)	.77(.468/y)	.39(.468/y)	.79(.468/y)	.43(.468/y)	1.14(.468/y)	(2)
Mold Cooling	.42(46.3/x)	.77(46.3/x)	.39(46.3/x)	.79(46.3/x)	.43(46.3/x)	1.14(46.3/x)	(2)
Copper							
Casting Quench	.42(4.8/x)	.77(4.8/x)	.26(4.8/x)	.53(4.8/x)	.29(4.8/x)	.76(4.8/x)	(2)
Direct Chill Casting	.42(145/x)	.77(145/x)	.26(145/x)	.53(145/x)	.29(145/x)	.76(145/x)	(2)
Dust Collection Scrubber	.42(.086/y)	.77(.086/y)	.26(.086/y)	.53(.086/y)	.29(.086/y)	.76(.086/y)	(2)
Grinding Scrubber	----------No Discharge of Pollutants----------						
Investment Casting	.42(1320/x)	.77(1320/x)	.26(1320/x)	.53(1320/x)	.29(1320/x)	.76(1320/x)	(2)
Melting Furnace Scrubber	.42(.282/y)	.77(.282/y)	.26(.282/y)	.53(.282/y)	.29(.282/y)	.76(.282/y)	(2)
Mold Cooling	.42(61/x)	.77(61/x)	.26(61/x)	.53(61/x)	.29(61/x)	.76(61/x)	(2)

* All 30-Day Maximum and Daily Maximum limitations are in mg/l units. The annual average limitations are in units of kg/1000 kkg (lb per million lb) of metal poured except for the Wet Sand Reclamation, Dust Collection Scrubber, and Melting Furnace Scrubber process segments. In the case of the latter two process segments, the annual average limitations are in units of kg/62.3 million Sm^3 (lb per billion SCF) of air scrubbed; in the case of the former process segment, the limitations are in units of kg/1000 kkg (lb per million lb) of sand reclaimed.

(1) Total Phenols - Phenols as measured by the 4-aminoantipyrene method (4AAP).

(2) Within the range of 7.0 to 10.0 at all times.

(3) Not regulated at NSPS for this process segment.

X = Actual normalized process wastewater flow (in gallons per 1,000 pounds of metal poured) for the specific plant.

Y = Actual normalized process wastewater flow (in gallons per 1,000 SCF of air scrubbed) for the specific plant.

TABLE II-6 (Continued)

NSPS LIMITATIONS* COVERING NON-CONTINUOUS DIRECT WASTEWATER DISCHARGES

Subcategory and Process Segment	TSS 30-Day Max.	TSS Daily Max.	Oil & Grease 30-Day Max.	Oil & Grease Daily Max.	Phenols(1) 30-Day Max.	Phenols(1) Daily Max.
Ferrous(4)						
Casting Cleaning	12(5.35/x)	15(5.35/x)	10(5.35/x)	30(5.35/x)	(3)	(3)
Casting Quench	12(5.7/x)	15(5.7/x)	10(5.7/x)	30(5.7/x)	(3)	(3)
Dust Collection Scrubber	12(.09/y)	15(.09/y)	10(.09/y)	30(.D9/y)	.3(.09/y)	.86(.09/y)
Grinding Scrubber	----------	----------	No Discharge of Pollutants	----------	----------	----------
Investment Casting	12(1320/x)	15(1320/x)	10(1320/x)	30(1320/x)	(3)	(3)
Melting Furnace Scrubber	12(.42/y)	15(.42/y)	10(.42/y)	30(.42/y)	.3(.42/y)	.86(.42/y)
Mold Cooling	12(17.7/x)	15(17.7/x)	10(17.7/x)	30(17.7/x)	(3)	(3)
Slag Quench	12(21.8/x)	15(21.8/x)	10(21.8/x)	30(21.8/x)	(3)	(3)
Wet Sand Reclamation	12(89.5/z)	15(89.5/z)	10(89.5/z)	30(89.5/z)	.3(89.5/z)	.86(89.5/z)

* All 30-Day Maximum and Daily Maximum limitations are in mg/l units. The annual average limitations are in units of kg/1000 kkg (lb per million lb) of metal poured except for the Wet Sand Reclamation, Dust Collection Scrubber, and Melting Furnace Scrubber process segments. In the case of the latter two process segments, the annual average limitations are in units of kg/62.3 million Sm^3 (lb per billion SCF) of air scrubbed; in the case of the former process segment, the limitations are in units of kg/1000 kkg (lb per million lb) of sand reclaimed.

(1) Total Phenols - Phenols as measured by the 4-aminoantipyrene method (4AAP).

(2) Within the range of 7.0 to 10.0 at all times.

(3) Not regulated at NSPS for this segment.

(4) Applicable to plants that cast primarily malleable iron where greater than 3,557 tons of metal are poured per year and to plants that cast primarily ductile or gray iron.

X = Actual normalized process wastewater flow (in gallons per 1,000 pounds of metal poured) for the specific plant.

Y = Actual normalized process wastewater flow (in gallons per 1,000 SCF of air scrubbed) for the specific plant.

Z = Actual normalized process wastewater flow (in gallons per 1,000 pounds of sand reclaimed) for the specific plant.

TABLE II-6 (Continued)

NSPS LIMITATIONS* COVERING NON-CONTINUOUS DIRECT WASTEWATER DISCHARGES

Subcategory and Process Segment	Copper 30-Day Max.	Copper Daily Max.	Lead 30-Day Max.	Lead Daily Max.	Zinc 30-Day Max.	Zinc Daily Max.	pH
Ferrous(4)							
Casting Cleaning	.16(5.35/x)	.29(5.35/x)	.26(5.35/x)	.53(5.35/x)	.37(5.35/x)	.98(5.35/x)	(2)
Casting Quench	.16(5.7/x)	.29(5.7/x)	.26(5.7/x)	.53(5.7/x)	.37(5.7/x)	.98(5.7/x)	(2)
Dust Collection Scrubber	.16(.09/y)	.29(.09/y)	.26(.09/y)	.53(.09/y)	.37(.09/y)	.98(.09/y)	(2)
Grinding Scrubber	----------No Discharge of Pollutants----------						
Investment Casting	.16(1320/x)	.29(1320/x)	.26(1320/x)	.53(1320/x)	.37(1320/x)	.98(1320/x)	(2)
Melting Furnace Scrubber	.16(.42/y)	.29(.42/y)	.26(.42/y)	.53(.42/y)	.37(.42/y)	.98(.42/y)	(2)
Mold Cooling	.16(17.7/x)	.29(17.7/x)	.26(17.7/x)	.53(17.7/x)	.37(17.7/x)	.98(17.7/x)	(2)
Slag Quench	.16(21.8/x)	.29(21.8/x)	.26(21.8/x)	.53(21.8/x)	.37(21.8/x)	.98(21.8/x)	(2)
Wet Sand Reclamation	.16(89.5/z)	.29(89.5/z)	.26(89.5/z)	.53(89.5/z)	.37(89.5/z)	.98(89.5/z)	(2)

* All 30-Day Maximum and Daily Maximum limitations are in mg/l units. The annual average limitations are in units of kg/1000 kkg (lb per million lb) of metal poured except for the Wet Sand Reclamation, Dust Collection Scrubber, and Melting Furnace Scrubber process segments. In the case of the latter two process segments, the annual average limitations are in units of kg/62.3 million Sm^3 (lb per billion SCF) of air scrubbed; in the case of the former process segment, the limitations are in units of kg/1000 kkg (lb per million lb) of sand reclaimed.

(1) Total Phenols - Phenols as measured by the 4-aminoantipyrene method (4AAP).

(2) Within the range of 7.0 to 10.0 at all times.

(3) Not regulated at NSPS for this segment.

(4) Applicable to plants that cast primarily malleable iron where greater than 3,557 tons of metal are poured per year and to plants that cast primarily ductile or gray iron.

X = Actual normalized process wastewater flow (in gallons per 1,000 pounds of metal poured) for the specific plant.

Y = Actual normalized process wastewater flow (in gallons per 1,000 SCF of air scrubbed) for the specific plant.

Z = Actual normalized process wastewater flow (in gallons per 1,000 pounds of sand reclaimed) for the specific plant.

TABLE II-6 (Continued)

NSPS LIMITATIONS* COVERING NON-CONTINUOUS DIRECT WASTEWATER DISCHARGES

Subcategory and Process Segment	TSS 30-Day Max.	TSS Daily Max.	Oil & Grease 30-Day Max.	Oil & Grease Daily Max.	Phenols(1) 30-Day Max.	Phenols(1) Daily Max.
Ferrous(5)						
Casting Cleaning	15(5.35/x)	38(5.35/x)	10(5.35/x)	30(5.35/x)	(3)	(3)
Casting Quench	15(5.7/x)	38(5.7/x)	10(5.7/x)	30(5.7/x)	(3)	(3)
Dust Collection Scrubber	15(.09/y)	38(.09/y)	10(.09/y)	30(.09/y)	.3(.09/y)	.86(.09/y)
Grinding Scrubber	----------	----------	No Discharge of Pollutants	----------	----------	----------
Investment Casting	15(1320/x)	38(1320/x)	10(1320/x)	30(1320/x)	(3)	(3)
Melting Furnace Scrubber	15(.42/y)	38(.42/y)	10(.42/y)	30(.42/y)	.3(.42/y)	.86(.42/y)
Mold Cooling	15(17.7/x)	38(17.7/x)	10(17.7/x)	30(17.7/x)	(3)	(3)
Slag Quench	15(21.8/x)	38(21.8/x)	10(21.8/x)	30(21.8/x)	(3)	(3)
Wet Sand Reclamation	15(89.5/z)	38(89.5/z)	10(89.5/z)	30(89.5/z)	.3(89.5/z)	.86(89.5/z)
Zinc						
Casting Quench	15(5.35/x)	38(5.35/x)	10(5.35/x)	30(5.35/x)	(3)	(3)
Die Casting	15(1.04/x)	38(1.04/x)	10(1.04/x)	30(1.04/x)	.3(1.04/x)	.86(1.04/x)
Melting Furnace Scrubber	15(.243/y)	38(.243/y)	10(.243/y)	30(.243/y)	.3(.243/y)	.86(.243/y)
Mold Cooling	15(47.3/x)	38(47.3/x)	10(47.3/x)	30(47.3/x)	(3)	(3)

* All 30-Day Maximum and Daily Maximum limitations are in mg/l units. The annual average limitations are in units of kg/1000 kkg (lb per million lb) of metal poured except for the Wet Sand Reclamation, Dust Collection Scrubber, and Melting Furnace Scrubber process segments. In the case of the latter two process segments, the annual average limitations are in units of kg/62.3 million Sm^3 (lb per billion SCF) of air scrubbed; in the case of the former process segment, the limitations are in units of kg/1000 kkg (lb per million lb) of sand reclaimed.

(1) Total Phenols - Phenols as measured by the 4-aminoantipyrene method (4AAP).

(2) Within the range of 7.0 to 10.0 at all times.

(3) Not regulated at NSPS for this process segment.

(5) Applicable to plants that cast primarily malleable iron where equal to or less than 3,557 tons of metal are poured per year and to plants that cast primarily steel.

X = Actual normalized process wastewater flow (in gallons per 1,000 pounds of metal poured) for the specific plant.

Y = Actual normalized process wastewater flow (in gallons per 1,000 SCF of air scrubbed) for the specific plant.

Z = Actual normalized process wastewater flow (in gallons per 1,000 pounds of sand reclaimed) for the specific plant.

TABLE II-6 (Continued)

NSPS LIMITATIONS* COVERING NON-CONTINUOUS DIRECT WASTEWATER DISCHARGES

Subcategory and Process Segment	Copper 30-Day Max.	Copper Daily Max.	Lead 30-Day Max.	Lead Daily Max.	Zinc 30-Day Max.	Zinc Daily Max.	pH
Ferrous(5)							
Casting Cleaning	.16(5.35/x)	.29(5.35/x)	.39(5.35/x)	.79(5.35/x)	.56(5.35/x)	1.47(5.35/x)	(2)
Casting Quench	.16(5.7/x)	.29(5.7/x)	.39(5.7/x)	.79(5.7/x)	.56(5.7/x)	1.47(5.7/x)	(2)
Dust Collection Scrubber	.16(.09/y)	.29(.09/y)	.39(.09/y)	.79(.09/y)	.56(.09/y)	1.47(.09/y)	(2)
Grinding Scrubber	----------	----------	No Discharge of Pollutants		----------	----------	
Investment Casting	.16(1320/x)	.29(1320/x)	.39(1320/x)	.79(1320/x)	.56(1320/x)	1.47(1320/x)	(2)
Melting Furnace Scrubber	.16(.42/y)	.29(.42/y)	.39(.42/y)	.79(.42/y)	.56(.42/y)	1.47(.42/y)	(2)
Mold Cooling	.16(17.7/x)	.29(17.7/x)	.39(17.7/x)	.79(17.7/x)	.56(17.7/x)	1.47(17.7/x)	(2)
Slag Quench	.16(21.8/x)	.29(21.8/x)	.39(21.8/x)	.79(21.8/x)	.56(21.8/x)	1.47(21.8/x)	(2)
Wet Sand Reclamation	.16(89.5/z)	.29(89.5/z)	.39(89.5/z)	.79(89.5/z)	.56(89.5/z)	1.47(89.5/z)	(2)
Zinc							
Casting Quench	.42(5.35/x)	.77(5.35/x)	.26(5.35/x)	.53(5.35/x)	.29(5.35/x)	.76(5.35/x)	(2)
Die Castng	.42(1.04/x)	.77(1.04/x)	.26(1.04/x)	.53(1.04/x)	.29(1.04/x)	.76(1.04/x)	(2)
Melting Furnace Scrubber	.42(.243/y)	.77(.243/y)	.26(.243/y)	.53(.243/y)	.29(.243/y)	.76(.243/y)	(2)
Mold Cooling	.42(47.3/x)	.77(47.3/x)	.26(47.3/x)	.53(47.3/x)	.29(47.3/x)	.76(47.3/x)	(2)

* All 30-Day Maximum and Daily Maximum limitations are in mg/l units. The annual average limitations are in units of kg/1000 kkg (lb per million lb) of metal poured except for the Wet Sand Reclamation, Dust Collection Scrubber, and Melting Furnace Scrubber process segments. In the case of the latter two process segments, the annual average limitations are in units of kg/62.3 million Sm^3 (lb per billion SCF) of air scrubbed; in the case of the former process segment, the limitations are in units of kg/1000 kkg (lb per million lb) of sand reclaimed.

(1) Total Phenols - Phenols as measured by the 4-aminoantipyrene method (4AAP).

(2) Within the range of 7.0 to 10.0 at all times.

(3) Not regulated at NSPS for this process segment.

(5) Applicable to plants that cast primarily malleable iron where equal to less than 3,557 tons of metal are poured per year and to plants that cast primarily steel.

X = Actual normalized process wastewater flow (in gallons per 1,000 pounds of metal poured) for the specific plant.

Y = Actual normalized process wastewater flow (in gallons per 1,000 SCF of air scrubbed) for the specific plant.

Z = Actual normalized process wastewater flow (in gallons per 1,000 pounds of sand reclaimed) for the specific plant.

TABLE II-7

PSES LIMITATIONS* COVERING CONTINUOUS INDIRECT DISCHARGES

Subcategory and Process Segment	TTO 30-Day Max.	TTO Daily Max.	Oil & Grease(1) 30-Day Max.	Oil & Grease(1) Daily Max.	Phenols(2) 30-Day Max.	Phenols(2) Daily Max.	Copper 30-Day Max.	Copper Daily Max.	Lead 30-Day Max.	Lead Daily Max.	Zinc 30-Day Max.	Zinc Daily Max.	pH
Aluminum													
Casting Cleaning	(4)	(4)	(4)	(4)	(4)	(4)	.0421	.0771	.039	.0791	.0431	.114	(3)
Casting Quench	.0095	.029	.121	.363	(4)	(4)	.0051	.0093	.0047	.0096	.0052	.0138	(3)
Die Casting	.01	.0308	.0864	.259	.0026	.0074	.0036	.0066	.0034	.0068	.0037	.0098	(3)
Dust Collection Scrubber	.2	.613	3.00	9.01	.09	.258	.126	.231	.117	.237	.129	.343	(3)
Grinding Scrubber	No Discharge of Pollutants												
Investment Casting	5.91	18.1	110	330	(4)	(4)	4.63	8.48	4.3	8.7	4.74	12.6	(3)
Melting Furnace Scrubber	2.6	7.97	39.1	117	1.17	3.36	1.64	3.01	1.52	3.09	1.68	4.45	(3)
Mold Cooling	.304	.935	3.86	11.6	(4)	(4)	.162	.297	.151	.305	.166	.44	(3)
Copper													
Casting Quench	.0109	.0335	.399	1.2	(4)	(4)	.0168	.0307	.0104	.0211	.0116	.0303	(3)
Direct Chill Casting	(4)	(4)	(4)	(4)	(4)	(4)	.506	.928	.314	.639	.35	.916	(3)
Dust Collection Scrubber	.54	1.65	7.18	21.5	.215	.617	.301	.553	.187	.38	.208	.545	(3)
Grinding Scrubber	No Discharge of Pollutants												
Investment Casting	8.29	25.4	110	330	(4)	(4)	4.63	8.48	2.86	5.84	3.19	8.37	(3)
Melting Furnace Scrubber	1.77	5.41	23.5	70.6	.706	2.02	.988	1.81	.612	1.25	.673	1.79	(3)
Mold Cooling	.14	.428	5.09	15.3	(4)	(4)	.214	.392	.132	.27	.148	.387	(3)

* All limitations are in units of kg/1000 kkg (lb per million lb) of metal poured except for the Wet Sand Reclamation, Dust Collection Scrubber, and Melting Furnace Scrubber process segments. In the case of the latter two process segments, the limitations are in units of kg/62.3 million Sm^3 (lb per billion SCF) of air scrubbed; in the case of the former process segment, the limitations are in units of kg/1000 kkg (lb per million lb) of sand reclaimed.

(1) Alternate monitoring parameter for TTO.

(2) Total Phenols - Phenols as measured by the 4-aminoantipyrene method (4AAP).

(3) Within the range of 7.0 to 10.0 at all times.

(4) Not regulated at PSES for this process segment.

TABLE II-7 (Continued)

PSES LIMITATIONS* COVERING CONTINUOUS INDIRECT DISCHARGES

Subcategory and Process Segment	TTO 30-Day Max.	TTO Daily Max.	Oil & Grease(1) 30-Day Max.	Oil & Grease(1) Daily Max.	Phenols(2) 30-Day Max.	Phenols(2) Daily Max.	Copper 30-Day Max.	Copper Daily Max.	Lead 30-Day Max.	Lead Daily Max.	Zinc 30-Day Max.	Zinc Daily Max.	pH
Ferrous(5)													
Casting Cleaning	(4)	(4)	(4)	(4)	(4)	(4)	.0071	.0129	.0116	.0237	.0165	.0437	(3)
Casting Quench	.00838	.0257	.476	1.43	(4)	(4)	.0076	.0138	.0124	.0252	.0176	.0466	(3)
Dust Collection Scrubber	.664	2.04	7.51	22.5	.225	.646	.12	.218	.195	.398	.278	.736	(3)
Grinding Scrubber	No Discharge of Pollutants												
Investment Casting	4.3	13.2	110	330	(4)	(4)	1.76	3.19	2.86	5.84	4.07	10.8	(3)
Melting Furnace Scrubber	2.73	8.34	35	105	1.05	3.01	.561	1.02	.911	1.86	1.30	3.44	(3)
Mold Cooling	.026	.0797	1.48	4.43	(4)	(4)	.0236	.0428	.0384	.0783	.0546	.145	(3)
Slag Quench	.00838	.0257	1.82	5.46	(4)	(4)	.0291	.0527	.0473	.0964	.0673	.178	(3)
Wet Sand Reclamation	.386	1.18	7.47	22.4	.224	.642	.12	.217	.194	.396	.276	.732	(3)

* All limitations are in units of kg/1000 kkg (lb per million lb) of metal poured except for the Wet Sand Reclamation, Dust Collection Scrubber, and Melting Furnace Scrubber process segments. In the case of the latter two process segments, the limitations are in units of kg/62.3 million Sm^3 (lb per billion SCF) of air scrubbed; in the case of the former process segment, the limitations are in units of kg/1000 kkg (lb per million lb) of sand reclaimed.

(1) Alternate monitoring parameter for TTO.

(2) Total Phenols - Phenols as measured by the 4-aminoantipyrene method (4AAP).

(3) Within the range of 7.0 to 10.0 at all times.

(4) Not regulated at PSES for this process segment.

(5) Applicable to plants that are casting primarily ductile iron, to plants that are casting primarily malleable iron where greater than 3557 tons of metal are poured per year, and to plants that are casting primarily gray iron where greater than 1784 tons of metal are poured per year.

TABLE II-7 (Continued)

PSES LIMITATIONS* COVERING CONTINUOUS INDIRECT DISCHARGES

Subcategory and Process Segment	TTO 30-Day Max.	TTO Daily Max.	Oil & Grease(1) 30-Day Max.	Oil & Grease(1) Daily Max.	Phenols(2) 30-Day Max.	Phenols(2) Daily Max.	Copper 30-Day Max.	Copper Daily Max.	Lead 30-Day Max.	Lead Daily Max.	Zinc 30-Day Max.	Zinc Daily Max.	pH
Ferrous(6)													
Casting Cleaning	(4)	(4)	(4)	(4)	(4)	(4)	.0071	.0129	.0174	.0353	.025	.D656	(3)
Casting Quench	.00838	.0257	.476	1.43	(4)	(4)	.0076	.0138	.0185	.0376	.D266	.0699	(3)
Dust Collection Scrubber	.664	2.04	7.51	22.5	.225	.656	.12	.218	.293	.593	.421	1.1	(3)
Grinding Scrubber	No Discharge of Pollutants												
Investment Casting	4.3	13.2	110	330	(4)	(4)	1.76	3.19	4.3	8.7	6.17	16.2	(3)
Melting Furnace Scrubber	2.73	8.34	35	105	1.05	3.01	.561	1.02	1.37	2.77	1.96	5.15	(3)
Mold Cooling	.026	.D797	1.48	4.43	(4)	(4)	.0236	.0428	.0576	.117	.0827	.217	(3)
Slag Quench	.00838	.0257	1.82	5.46	(4)	(4)	.0291	.0527	.0709	.144	.102	.267	(3)
Wet Sand Reclamation	.386	1.18	7.47	22.4	.224	.642	.12	.217	.291	.59	.418	1.1	(3)
Zinc													
Casting Quench	.0304	.093	.446	1.34	(4)	(4)	.0187	.0344	.0116	.0237	.0129	.0339	(3)
Die Casting	.0064	.0196	.0864	.259	.0026	.0074	.0036	.0066	.0022	.0046	.0025	.0066	(3)
Melting Furnace Scrubber	1.29	3.95	20.3	60.8	.608	1.74	.852	1.56	.527	1.07	.588	1.54	(3)
Mold Cooling	.268	.821	3.94	11.8	(4)	(4)	.166	.304	.103	.209	.114	.3	(3)

* All limitations are in units of kg/1000 kkg (lb per million lb) of metal poured except for the Wet Sand Reclamation, Dust Collection Scrubber, and Melting Furnace Scrubber process segments. In the case of the latter two process segments, the limitations are in units of kg/62.3 million Sm^3 (lb per billion SCF) of air scrubbed; in the case of the former process segment, the limitations are in units of kg/1000 kkg (lb per million lb) of sand reclaimed.

(1) Alternate monitoring parameter for TTO.

(2) Total Phenols - Phenols as measured by the 4-aminoantipyrene method (4AAP).

(3) Within the range of 7.0 to 10.0 at all times.

(4) Not regulated at PSES for this process.

(6) Applicable to plants that are casting primarily steel, to plants that are casting primarily malleable iron where equal to or less than 3557 tons of metal poured per year, and to plants that are casting primarily gray iron where equal to or less than 1784 tons of metal are poured per year.

TABLE II-8

PSNS LIMITATIONS* COVERING CONTINUOUS INDIRECT DISCHARGES

Subcategory and Process Segment	TTO 30-Day Max.	TTO Daily Max.	Oil & Grease(1) 30-Day Max.	Oil & Grease(1) Daily Max.	Phenols(2) 30-Day Max.	Phenols(2) Daily Max.	Copper 30-Day Max.	Copper Daily Max.	Lead 3D-Day Max.	Lead Daily Max.	Zinc 30-Day Max.	Zinc Daily Max.	pH
Aluminum													
Casting Cleaning	(4)	(4)	(4)	(4)	(4)	(4)	.0421	.0771	.039	.0791	.0431	.114	(3)
Casting Quench	.0095	.029	.121	.363	(4)	(4)	.0051	.0093	.0047	.0096	.0052	.0138	(3)
Die Casting	.01	.0308	.0864	.0259	.0026	.0074	.0036	.0066	.0034	.0068	.0037	.0098	(3)
Dust Collection Scrubber	.2	.613	3.00	9.01	.09	.258	.126	.231	.117	.237	.129	.343	(3)
Grinding Scrubber	No Discharge of Pollutants												
Investment Casting	5.91	18.1	110	330	(4)	(4)	4.63	8.48	4.3	8.7	4.74	12.6	(3)
Melting Furnace Scrubber	2.6	7.97	39.1	117	1.17	3.36	1.64	3.01	1.52	3.09	1.68	4.45	(3)
Mold Cooling	.304	.935	3.86	11.6	(4)	(4)	.162	.297	.151	.305	.166	.44	(3)
Copper													
Casting Quench	.0109	.0335	.399	1.2	(4)	(4)	.0168	.0307	.0104	.0211	.0116	.0303	(3)
Direct Chill Casting	(4)	(4)	(4)	(4)	(4)	(4)	.506	.928	.314	.639	.35	.916	(3)
Dust Collection Scrubber	.54	1.65	7.18	21.5	.215	.617	.301	.553	.187	.38	.208	.545	(3)
Grinding Scrubber	No Discharge of Pollutants												
Investment Casting	8.29	25.4	110	330	(4)	(4)	4.63	8.48	2.86	5.84	3.19	8.37	(3)
Melting Furnace Scrubber	1.77	5.41	23.5	70.6	.706	2.02	.988	1.81	.612	1.25	.673	1.79	(3)
Mold Cooling	.14	.428	5.09	15.3	(4)	(4)	.214	.392	.132	.27	.148	.387	(3)

* All limitations are in units of kg/1000 kkg (lb per million lb) of metal poured except for the Wet Sand Reclamation, Dust Collection Scrubber, and Melting Furnace Scrubber process segments. In the case of the latter two process segments, the limitations are in units of kg/62.3 million Sm^3 (lb per billion SCF) of air scrubbed; in the case of the former process segment, the limitations are in units of kg/1000 kkg (lb per million lb) of sand reclaimed.

(1) Alternate monitoring parameter for TTO.

(2) Total Phenols - Phenols as measured by the 4-aminoantipyrene method (4AAP).

(3) Within the range of 7.0 to 10.0 at all times.

(4) Not regulated at PSNS for this process segment.

TABLE II-8 (Continued)

PSNS LIMITATIONS* COVERING CONTINUOUS INDIRECT DISCHARGES

Subcategory and Process Segment	TTO 30-Day Max.	TTO Daily Max.	Oil & Grease(1) 30-Day Max.	Oil & Grease(1) Daily Max.	Phenols(2) 30-Day Max.	Phenols(2) Daily Max.	Copper 30-Day Max.	Copper Daily Max.	Lead 30-Day Max.	Lead Daily Max.	Zinc 30-Day Max.	Zinc Daily Max.	pH
Ferrous(5)													
Casting Cleaning	(4)	(4)	(4)	(4)	(4)	(4)	.0071	.0129	.0116	.0237	.0165	.0437	(3)
Casting Quench	.00838	.0257	.476	1.43	(4)	(4)	.0076	.0138	.0124	.0252	.0176	.0466	(3)
Dust Collection Scrubber	.664	2.04	7.51	22.5	.225	.646	.12	.218	.195	.398	.278	.736	(3)
Grinding Scrubber	No Discharge of Pollutants												
Investment Casting	4.3	13.2	110	330	(4)	(4)	1.76	3.19	2.86	5.84	4.07	10.8	(3)
Melting Furnace Scrubber	2.73	8.34	35	105	1.05	3.01	.561	1.02	.911	1.86	1.30	3.44	(3)
Mold Cooling	.026	.0797	1.48	4.43	(4)	(4)	.0236	.0428	.0384	.0783	.0546	.145	(3)
Slag Quench	.00838	.0257	1.82	5.46	(4)	(4)	.0291	.0527	.0473	.0964	.0673	.178	(3)
Wet Sand Reclamation	.386	1.18	7.47	22.4	.224	.642	.12	.217	.194	.396	.276	.732	(3)

* All limitations are in units of kg/1000 kkg (lb per million lb) of metal poured except for the Wet Sand Reclamation, Dust Collection Scrubber, and Melting Furnace Scrubber process segments. In the case of the latter two process segments, the limitations are in units of kg/62.3 million Sm^3 (lb per billion SCF) of air scrubbed; in the case of the former process segment, the limitations are in units of kg/1000 kkg (lb per million lb) of sand reclaimed.

(1) Alternate monitoring parameter for TTO.

(2) Total Phenols - Phenols as measured by the 4-aminoantipyrene method (4AAP).

(3) Within the range of 7.0 to 10.0 at all times.

(4) Not regulated at PSNS for this process segment.

(5) Applicable to plants that are casting primarily ductile iron, to plants that are casting primarily malleable iron where greater than 3557 tons of metal are poured per year, and to plants that are casting primarily gray iron where greater than 1784 tons of metal are poured per year.

TABLE II-8 (Continued)

PSNS LIMITATIONS* COVERING CONTINUOUS INDIRECT DISCHARGES

Subcategory and Process Segment	TTO 30-Day Max.	TTO Daily Max.	Oil & Grease(1) 30-Day Max.	Oil & Grease(1) Daily Max.	Phenols(2) 30-Day Max.	Phenols(2) Daily Max.	Copper 30-Day Max.	Copper Daily Max.	Lead 30-Day Max.	Lead Daily Max.	Zinc 30-Day Max.	Zinc Daily Max.	pH
Ferrous(6)													
Casting Cleaning	(4)	(4)	(4)	(4)	(4)	(4)	.0071	.0129	.0174	.0353	.025	.0656	(3)
Casting Quench	.00838	.0257	.476	1.43	(4)	(4)	.0076	.0138	.0185	.0376	.0266	.0699	(3)
Dust Collection Scrubber	.664	2.04	7.51	22.5	.225	.656	.12	.218	.293	.593	.421	1.1	(3)
Grinding Scrubber	No Discharge of Pollutants												
Investment Casting	4.3	13.2	110	330	(4)	(4)	1.76	3.19	4.3	8.7	6.17	16.2	(3)
Melting Furnace Scrubber	2.73	8.34	35	105	1.05	3.01	.561	1.02	1.37	2.77	1.96	5.15	(3)
Mold Cooling	.026	.0797	1.48	4.43	(4)	(4)	.0236	.0428	.0576	.117	.0827	.217	(3)
Slag Quench	.00838	.0257	1.82	5.46	(4)	(4)	.0291	.0527	.0709	.144	.102	.267	(3)
Wet Sand Reclamation	.386	1.18	7.47	22.4	.224	.642	.12	.217	.291	.59	.418	1.1	(3)
Zinc													
Casting Quench	.0304	.093	.446	1.34	(4)	(4)	.0187	.0344	.0116	.0237	.0129	.0339	(3)
Die Casting	.0064	.0196	.0864	.259	.0026	.0074	.0036	.0066	.0022	.0046	.0025	.0066	(3)
Melting Furnace Scrubber	1.29	3.95	20.3	60.8	.608	1.74	.852	1.56	.527	1.07	.588	1.54	(3)
Mold Cooling	.268	.821	3.94	11.8	(4)	(4)	.166	.304	.103	.209	.114	.3	(3)

* All limitations are in units of kg/1000 kkg (lb per million lb) of metal poured except for the Wet Sand Reclamation, Dust Collection Scrubber, and Melting Furnace Scrubber process segments. In the case of the latter two process segments, the limitations are in units of kg/62.3 million Sm^3 (lb per billion SCF) of air scrubbed; in the case of the former process segment, the limitations are in units of kg/1000 kkg (lb per million lb) of sand reclaimed.

(1) Alternate monitoring parameter for TTO.

(2) Total Phenols - Phenols as measured by the 4-aminoantipyrene method (4AAP).

(3) Within the range of 7.0 to 10.0 at all times.

(4) Not regulated at PSNS for this process segment.

(6) Applicable to plants that are casting primarily steel, to plants that are casting primarily malleable iron where equal to or less than 3557 tons of metal or poured per year, and to plants that are casting primarily gray iron where equal to or less than 1784 tons of metal are poured per year.

SECTION III

INTRODUCTION

LEGAL AUTHORITY

Effluent limitations guidelines and standards are being promulgated for the metal molding and casting point source category under authority of Sections 301, 304, 306, 307, and 501 of the Federal Water Pollution Control Act, as amended (the Clean Water Act or the Act). The following paragraphs describe the Clean Water Act and subsequent Settlement Agreement that provide the legal basis for this rulemaking.

Background - The Clean Water Act

The Federal Water Pollution Control Act Amendments of 1972 established a comprehensive program to "restore and maintain the chemical, physical, and biological integrity of the Nation's waters." By July 1, 1977, existing industrial dischargers were required to achieve effluent limitations requiring the application of the best practicable control technology currently available (BPT), Section 301 (b)(1)(A); and by July 1, 1984, these dischargers were required to achieve effluent limitations requiring the application of the best available technology economically achievable (BAT), Section 301 (b)(2)(A). According to the Act, BAT should result in reasonable further progress toward the national goal of eliminating the discharge of all pollutants. New industrial direct dischargers were required to comply with Section 306 new source performance standards (NSPS), based on the best available demonstrated technology; and new and existing sources that introduce pollutants into publicly owned treatment works (POTWs) were subject to pretreatment standards under Sections 307 (b) and (c) of the Act. Direct dischargers are those plants that discharge pollutants into navigable waters of the United States. Plants that introduce pollutants into POTWs are called indirect dischargers. The requirements for direct dischargers were to be incorporated into National Pollutant Discharge Elimination System (NPDES) permits issued under Section 402 of the Act; however, pretreatment standards were made enforceable directly against any owner or operator of a facility that is an indirect discharger.

Although Section 402 (a)(1) of the 1972 Act authorized the setting of requirements for direct dischargers on a case-by-case basis, Congress intended that, for the most part, control requirements would be based on national regulations promulgated by the Administrator of EPA. To this end, Section 304 (b) of the Act required the Administrator to promulgate regulations providing guidelines for effluent limitations setting forth the degree of effluent reduction attainable through the application of BPT and BAT. Moreover, Section 306 of the Act required

promulgation of regulations for NSPS, and Sections 304 (f), 307 (b), and 307 (c) required promulgation of regulations for pretreatment standards. In addition to these regulations for designated industrial categories, Section 307 (a) of the Act required the Administrator to promulgate effluent standards applicable to all dischargers of toxic pollutants. Finally, Section 501 (a) of the Act authorized the Administrator to prescribe any additional regulations necessary to carry out his functions under the Act.

The EPA was unable to promulgate many of these regulations by the dates contained in the Act. As a result, EPA was sued in 1976 by several environmental groups. In settlement of this lawsuit, EPA and the plaintiffs executed a Settlement Agreement, which was approved by the Court. This Agreement required EPA to develop a program and adhere to a schedule for promulgating, for 21 major industries, BAT effluent limitations, pretreatment standards, and new source performance standards for 65 toxic pollutants and classes of pollutants. (See Natural Resources Defense Council, Inc. v. Train, 8 ERC 2120 (D.D.C. 1976), modified, 12 ERC 1833 (D.D.C. 1979), modified by Orders dated October 26, 1982, August 2, 1983, January 6, 1984, July 5, 1984, and January 7, 1985)

The Clean Water Act amendments of 1977 incorporated several of the basic elements of the Settlement Agreement program for priority pollutant control. Sections 301 (b)(2)(A) and 301 (b)(2)(C) of the Act now require the achievement by July 1, 1984, of effluent limitations requiring application of BAT for toxic pollutants, including the 65 toxic pollutants and classes of pollutants which Congress declared toxic under Section 307 (a) of the Act. The 1977 Amendments to the Clean Water Act added Section 301(b)(2)(E), establishing "best conventional pollutant control technology" (BCT) for the discharge of conventional pollutants from existing industrial point sources. Section 304(a)(4) designated the following as conventional pollutants: BOD, TSS, fecal coliform, pH, and any additional pollutants defined by the Administrator as conventional. The Administrator designated oil and grease a conventional pollutant on July 30, 1979 (44 FR 44501). Likewise, EPA's programs for new source performance standards and pretreatment standards are now aimed principally at toxic pollutant control. Moreover, to strengthen the toxic pollutant control program, Congress added Section 304 (e) to the Act, authorizing the Administrator to prescribe best management practices (BMPs) to prevent the release of toxic and hazardous pollutants from plant site runoff, spillage or leaks, sludge or waste disposal, and drainage from raw material storage associated with, or ancillary to, the manufacturing or treatment process.

Background - Prior Regulations

There are no prior promulgated regulations applicable to this point source category. On November 15, 1982, EPA proposed regulations to limit the discharge of process wastewater pollutants from metal molding and casting plants to waters of the

United States and into publicly owned treatment works (POTWs). (See 47 FR 51512.) After proposal, the Agency conducted an extensive program to verify its data base, and sampled wastewater treatment systems employed at metal molding and casting plants.

A notice of availability was published on March 20, 1984 (49 FR 10280), to make available for public review additional data and information gathered after proposal. The notice also summarized preliminary analyses of the supplemented data base and EPA's assessment of how these data and analyses would influence the final regulations. However, some of the data and analyses were not completed in time for the March 20 notice. A second notice of availability was published on February 15, 1985 (50 FR 6572) in order to make available for public comment these additional data and the results of certain technical and economic analyses.

SUMMARY OF METHODOLOGY

The Agency has gathered background information and supporting data for this regulation since 1974. A substantial portion of the data gathering and analysis efforts occurred before the regulation was proposed. Additional data were obtained after proposal and analyses were performed using these data. These additional data and the results of the analyses were made available for public comment.

The initial methodology and data gathering efforts used in developing the proposed metal molding and casting regulation were summarized in the preamble to the proposed regulation (47 FR 51512; November 15, 1982) and were described in detail in the Proposed Development Document for Effluent Limitations Guidelines and Standards for the Metal Molding and Casting (Foundries) Point Source Category, EPA, 440/1-82-070b, November, 1982).

In summary, before proposal, EPA studied the metal molding and casting category to determine whether differences in the raw materials, final products, manufacturing processes, equipment, age and size of plants, water use, wastewater characteristics, or other factors required the development of separate effluent limitations guidelines and standards for different segments (or subcategories) of the category. This study included the identification of raw waste characteristics, sources and volumes of water used, processes employed, and sources of wastewater. Sampling and analysis of specific wastewaters enabled EPA to determine the presence and concentration of pollutants in wastewater discharges.

EPA also identified wastewater control and treatment technologies for the metal molding and casting category. The Agency analyzed data on the performance, operational constraints, and reliability of these technologies. In addition, EPA considered the impacts of these technologies on air quality, solid waste generation, water scarcity, and energy requirements.

The Agency estimated the costs of each control and treatment technology considered using cost equations based on standard engineering analyses. EPA derived control technology costs for model plants representative of the metal molding and casting plants in the Agency's data base. The Agency then evaluated the potential economic impacts of these costs on the category.

The Agency also developed a financial profile for model plants representative of the plants in EPA's data base using production data from Data Collection Portfolios (DCPs) and financial data from publicly available sources. Using financial information and compliance cost estimates, the impacts of the proposed regulations on plants with a discharge were determined. Those impacts were extrapolated to the estimated total number of plants in the metal molding and casting category that discharge wastewaters directly or indirectly to navigable waters.

Following publication of the proposed regulations on November 15, 1982 (see 47 FR 51512), the Agency received numerous comments. A number of significant issues were raised by the commenters; these included the feasibility of complete recycle, the validity of the data base supporting complete recycle, the treatment effectiveness data base, the magnitude of the discharges from die casting operations, the accuracy of EPA's estimates of compliance costs, and the projected economic impacts of the proposed regulations. Comments relating to these issues prompted the Agency to verify its technical data base and to reconsider many aspects of the proposed regulations.

After a review of the data base, the Agency corrected, as appropriate, the errors noted in the comments relating to previously-reported data. As part of these efforts, the Agency made a number of comment verification requests to plants that submitted comments on the proposed regulations or were cited specifically in comments submitted by others. These comment verification activities are discussed in the Agency's first notice of availability and request for comments published in the Federal Register on March 20, 1984 at 49 FR 10280. Also discussed in the March 20, 1984 notice are the results of the Agency's analyses of the supplemented data base and any appropriate modifications to or confirmations of the underlying facets of the proposed regulations. The Agency also solicited comments and information concerning a number of other aspects of the rulemaking.

On February 15, 1985, the Agency published, at 50 FR 6572, another notice of availability and request for comments concerning additional data that were gathered and analyses that were completed after March 20, 1984. In the February 15 notice, the Agency summarized the major issues raised in comments on its March 20, 1984 notice and requested additional specific information.

The Agency has reviewed all information received since its November 15, 1982 proposal and the publication of the two notices of availability just described. EPA used the new data and information to analyze and respond to public comments. To the extent that new information confirmed arguments made by commenters, EPA revised its regulatory options and performed additional analyses to evaluate the revised options. These additional analyses and the regulatory options considered by EPA as the bases for the final regulations are discussed in more detail in later sections of this document.

Upon consideration of all available information, EPA identified various control and treatment technologies as BPT, BAT, NSPS, PSES, and PSNS. The final regulations, however, do not require the installation of any particular technology. Rather, they require achievement of effluent limitations and standards representative of the proper application of these technologies or equivalent technologies. A plant's existing controls should be fully evaluated, and existing treatment systems fully optimized, before commitment to any new or additional in-plant or end-of-pipe treatment technology.

DATA GATHERING EFFORTS

This section describes in more detail EPA's efforts to collect and evaluate technical data during the development of regulations for the metal molding and casting point source category. The section is organized chronologically.

Pre-Proposal

Review of Existing Data

Initially, all existing information on the metal molding and casting industry was collected from previous EPA foundry studies, literature sources, trade journals, inquiries to EPA regional and state environmental authorities, and from raw material and equipment manufacturers and suppliers. These sources provided information on industry practices and wastewater generation, and gave direc-tion to the effort of collecting additional data.

Previous Studies. Previous Federal government contracted studies of the foundry category were examined. These studies were prepared by Cyrus Wm. Rice Division of NUS Corporation under Contract No. 68-01-1507 and A.T. Kearney and Company, Inc. for the National Technical Information Service, U.S. Department of Commerce, PB-207 148. These studies provided data on the types of metals cast, plant size, geographic distribution, manufacturing processes, waste treatment technology, and raw and treated process wastewater characteristics at specific plants.

Literature Survey. Published literature in the form of handbooks, engineering and technical texts, reports, trade journals, technical papers, periodicals, and promotional materials were examined. Those sources used to provide

information for this study are listed in Section XIV. In addition, the "Metal Casting Industry Directory" (a Penton Publication) provided information on the number, size, and distribution of foundry operations, as well as plant characteristics.

Regional and State Data. EPA Regional offices and State environmental agencies were contacted to obtain permit and monitoring data on specific plants. The EPA's Water Enforcement Division's "Permits Compliance System" was used as another mechanism to identify and gather additional information on metal molding and casting plants.

Raw Material Manufacturers and Suppliers. Manufacturers and suppliers of foundry raw materials and process chemicals, such as core binders and mold release agents, were contacted for information about the chemical compositions of their products. Since many of these materials are considered proprietary by the vendor, only generic information was obtained about these products. From this information, predictions were made as to the possible introduction of toxic pollutants into metal molding and casting process wastewaters due to the presence of these materials in the facility work area.

Equipment Manufacturers and Suppliers. Manufacturers and suppliers of foundry process and pollution control equipment were contacted to obtain engineering specifications and technical information on metal molding and casting manufacturing processes and air and water pollution control practices.

Sampling Data - The 1974 Sampling Effort. In 1974, the Agency visited and collected wastewater samples at 19 ferrous foundries as part of the rulemaking effort for the iron and steel point source category. Analyses were performed on these samples to determine concentrations of conventional pollutants, 4AAP phenolics, cyanide, ammonia, and some metals. These existing data were also reviewed in the early stages of this rulemaking effort.

A preliminary review of the data that existed at the start of this study indicated the need for more extensive plant data. The needed data were collected through the use of the industry survey and sampling program, described below.

Data Collection Portfolio

A questionnaire, or data collection portfolio (DCP), was designed to collect information about all types of plants engaged in metal molding and casting. Information was solicited about plant size, age, historical production, number of employees, type of metal cast, manufacturing processes, water usage, raw material and process chemical usage, wastewater generation, wastewater treatment, characteristics of the plant's raw and treated wastewater, land availability, and other pertinent factors.

The Penton "Metal Casting Industry Directory", which identifies 4,400 metal molding and casting operations, was used as the primary basis for the selection of plants to be included in the survey. The actual plant selection is described in greater detail in the Administrative record for this rulemaking. After reviewing existing treatment processes, in-process control trends, information available in the Penton casting industry directory, and other data, a total of 1,269 plants were surveyed using the DCP questionnaire (approximately 29 percent of the total plant population identified in the Penton census in 1977). Penton Census information used in the selection of plants to be surveyed is summarized in Table III-1.

In addition to the distribution of plant surveys described above, metal molding and casting DCPs were mailed to 226 plants engaged in the casting of lead. These plants proved to be primarily involved in the manufacturing of lead batteries and have been assigned to the battery manufacturing point source category.

General summary tables included in the Administrative record for this rulemaking provide summaries of the plant survey data.

Sampling and Analytical Program - 1977 to 1979

In 1978, EPA performed a more thorough sampling and analysis program. Unlike the 1974 effort described under "Review of Existing Data", which was conducted as part of the rulemaking effort for the iron and steel category, this later effort was conducted specifically to collect information and data for use in the development of effluent limitations and standards for the metal molding and casting point source category. The following distribution of facilities was sampled: three aluminum casting plants, four copper casting plants, eight iron and steel casting plants, one lead casting plant, one magnesium casting plant, and one zinc casting plant. In addition, three plants that cast both aluminum and zinc were sampled. During the 1978 sampling and analysis effort, EPA analyzed representative wastewaters from these plants for the presence and quantities of the toxic pollutants listed in Section 307(a) of the Clean Water Act, as well as for several conventional and nonconventional pollutants.

The plants chosen for sampling were selected to provide a representative cross-section of the manufacturing processes, types of metal cast, and wastewater treatment present in the category. Before visiting a plant, EPA reviewed available information on manufacturing processes and wastewater treatment at that plant. The Agency then selected sample points from which process wastewaters and treated effluent would be collected for analysis. Prior to each sampling visit, the Agency prepared, reviewed, and approved a detailed sampling plan showing the selected sample points and the overall sampling procedures.
In general, samples were taken on three consecutive days of plant operation. Raw wastewater and treated effluent samples were collected, as well as samples of the plant intake water. Wherever possible, samples were collected by an automatic, time-

series compositor over three consecutive operational periods (8 to 24 hours per period at most plants). When automatic compositing was not possible, grab samples were taken and composited manually.

Full details of the sampling and analysis program and the data derived from that program are presented in Section V of this document.

All of the data obtained from both the 1974 and the later sampling effort were analyzed to determine process wastewater characteristics and mass discharge rates for each sampled plant.

Proposal and Solicitation of Comments

The DCP survey responses, along with additional data, were used as the basis of the November 15, 1982 proposed regulation. The purpose of that action was the proposal of effluent limitations guidelines and standards controlling wastewater discharges to waters of the United States and into POTWs from metal molding and casting (foundry) facilities (47 FR 51512).

Additional comments and information on six specific issues were solicited as part of the notice of proposed rulemaking (see Section XXIV; 47 FR 51529 and 51530). Comments and data were sought on: 1) small plant production, employment, sales, revenues, and capitalization and on the financial profiles for all plants developed in the economic methodology; 2) the ability to operate processes properly at complete recycle/no discharge (100 percent recycle); 3) long-term raw and treated effluent analytical data for plants with well-operated lime and settle treatment systems with 90 percent recycle of treated process wastewater from casting processes with proposed limitations and standards of no discharge of process wastewater pollutants; 4) the Agency's comparisons between 100 percent recycle and the two discharge alternatives of 90 percent and 50 percent recycle for 15 process segments; 5) the feasibility of substituting non-toxic process chemicals for process chemicals which may contain toxic organic pollutants; and 6) economic information, not only on plant closures and job losses, but also on modernization or expansion plans, ability to pass price increases through to customers, plant profitability, the need for additional employees to operate and maintain pollution control equipment, international competitiveness, the availability of less costly control technology, and information that would be helpful in developing the definition of a "small" plant.

Comments Received in Response to the Proposed Regulation

The Agency received numerous comments on the proposed regulation. These comments criticized data and analyses that were fundamental to the regulation and prompted the Agency to verify its data base and to reconsider many aspects of the regulation. Interested persons are urged to review the rulemaking record for a complete understanding of the many issues raised in comments. Discussed

below are those issues that appeared to be of greatest concern to commenters and that warranted further study by the Agency.

Feasibility of Complete Recycle. The most prevalent comment received by EPA in response to the proposed regulation was that the proposed requirement for complete recycle with no allowance for wastewater discharge was not feasible technically. It was asserted that recycle systems must have discharge ("blowdown") to remove dissolved solids and other pollutants which would otherwise build up in these systems, causing scaling and corrosion. Commenters asserted that sophisticated technology (e.g., reverse osmosis, ion exchange, etc.) was necessary to achieve complete recycle and that these technologies were not demonstrated in the industry. Further, it was asserted that the feasibility of recycle systems to achieve complete recycle is dependent upon the dissolved solids content of the intake water supply available to individual plants to make-up for water losses such as evaporation and moisture removed in sludges.

Data Base Supporting Complete Recycle. Trade associations and some members of industry asserted that numerous individual plants indicated by EPA to demonstrate complete recycle with no discharge were misrepresented in the data base. These commenters asserted that most of the plants in EPA's data base which employ wastewater recycle systems have periodic discharges to allow equipment maintenance and repair, regular removal of "wet" sludges, "discharges" to groundwater, discharges that are removed for off-site disposal by contract haulers, and discharges to adjacent industrial treatment facilities. As such, commenters claimed that these plants do not demonstrate the proposed requirement for complete recycle with no discharge.

Treatment Effectiveness Data Base. A number of comments on the proposed regulation indicated that the Agency did not use an appropriate basis for establishing effluent limitations for those process segments where discharges were allowed. It was asserted that the Agency's use of the Combined Metals Data Base (the data base from well operated lime and settle treatment systems, used in other industries, that was used to establish lime and settle treatment effectiveness for the metal molding and casting industry at proposal) was not appropriate because these data represent treatment of wastewaters from industries whose wastewaters are not comparable to wastewaters from the metal molding and casting industry.

Mass-Based Effluent Limitations and Standards. Some commenters indicated that effluent limitations and standards for the metal molding and casting industry should be based on allowable concentration-based limitations, rather than mass-based limitations. Further, it was asserted that there was no valid statistical relationship between the mass of pollutants discharged and the mass of metal poured (or any other production normalizing parameter).

Die Casting. EPA received many comments which asserted that die casting operations discharge very small quantities of wastewaters and, therefore, that die casters should not be regulated.

Compliance Costs. Many commenters asserted that EPA's estimates of the cost to comply with the proposed regulations were understated substantially. These commenters asserted that the true cost of complying with the proposed regulations was substantially in excess of $100 million per year.

Economic Impact. Many commenters indicated that the Agency's economic analysis vastly understated the impact of the proposed regulations because it did not consider the major downturn in the economy since 1979, the consequent reduction in demand for cast products, and the general state of the industry (profits, reduced employment, and significant plant closures). Also, it was asserted that EPA did not consider the impact of foreign imports in the analysis. In a similar vein, it was asserted that EPA did not adequately consider the impact of the proposed regulation on small plants. It was suggested that all small plants, as defined by the Small Business Administration (SBA), should be exempted from complying with the regulations.

Data Gathering Efforts in Response to Comments Received on the Proposal

After proposal, the EPA conducted an extensive program to respond to comments received. This often included gathering additional data in order to supplement the preproposal data base or to verify comments received on the proposal. These data gathering efforts are described below.

Numerous comments and public hearing statements raised issues pertaining to the feasibility of complete recycle and the die casting segments of the metal molding and casting category. In response to these comments, the Agency contacted all plants considered to have systems with complete recycle and all die casting plants that submitted comments and requested that they support their assertion that they should be excluded from regulation because their discharges are environmentally inconsequential. Numerous requests also were made to die casting plants and to other metal molding and casting plants to obtain (1) long term data on the performance of wastewater treatment systems, (2) cost data on existing treatment systems and technology believed necessary to comply with the proposed regulation, (3) information and data on the technical feasibility of complete recycle/no discharge systems, (4) confirmation of discharge status and previous submissions (DCP's and telephone surveys) by all plants included in EPA data base as having complete recycle with no discharge (except those plants known to have closed), and (5) metal molding and casting process data, including flow data, where none was previously available to provide a basis for interpreting other data submissions, and related information. The formats and a number of the specific inquiries used in these requests were developed, in part, with

the cooperation of the American Foundrymen's Society (AFS) and the American Die Casting Institute (ADCI).

The data and information received as a result of this solicitation were used to characterize the wastewaters from die casting operations and estimate their volume, as well as to supplement the Agency's body of information on recycle and treatment systems as applied to die casting plants.

In addition, 13 plant visits were made by the Agency in order to observe die casting operations and in-place treatment technologies. One of these visits led to a three day sampling visit which allowed the Agency to collect additional analytical data on die casting wastewaters. This visit supplemented data gathered by sampling visits at five other die casting facilities prior to proposal of the regulations.

In response to comments received on the data base supporting the feasibility of complete recycle, EPA requested all plants with processes identified as having complete recycle with no discharge to verify the status of recycle and discharge, except where plants were known to be closed and could not be contacted. In many instances this request was accompanied by copies of the previously completed DCPs and telephone surveys (as appropriate) which had led to no discharge findings for each of these plants, and an explanation of what was considered "complete recycle" for purposes of these regulations.

The results of this survey were used to supplement the EPA's water use data base, especially the number of plants achieving no discharge. Recycle rate data were included along with data previously in the record from DCPs and plant visits and used to ascertain the recycle rates which served as a basis for final limitations.

The Agency also performed a model analysis of recycle systems to supplement and confirm industry data on demonstrated rates of recycle and blowdown, if any. The recycle model analysis methodology and results are discussed in detail in Section VII of this document.

In response to comments on the treatment effectiveness data base, the Agency collected a significant amount of data provided to EPA or State agencies in discharge monitoring reports (DMRs). DMR data include long-term treated effluent quantities or concentrations of pollutants discharged from active foundries. The DMRs are a requirement of the National Pollutant Discharge Elimination System and are submitted by individual plants to inform State and Regional personnel of the plant's status relative to compliance with its discharge permit.

DMR data were obtained from 75 foundries during the metal molding and casting rulemaking effort. Although some of the data were submitted to EPA by individual plants, the bulk of the data were collected by the following method: First, states that had a large

number of foundries were identified for efficiency in data collection. Seven states and EPA Region 3 were chosen for data collection trips. The seven states include Alabama, Connecticut, Illinois, Michigan, New York, Ohio, and Wisconsin; Region 3 includes Delaware, the District of Columbia, Maryland, Pennsylvania, Virginia, and West Virginia. The EPA offices of these states and the Region 3 office in Philadelphia were then visited by EPA's contractor for purposes of data collection.

At the EPA offices, a review of all available NPDES files from 1980 through 1983 was conducted in order to ensure that all data incorporated into EPA's data base were representative of well-operated treatment systems. A list of the specific criteria used and details of the selection process can be found in the record for this rulemaking. After a thorough review of the data, long-term data from the discharge monitoring reports of 34 plants remained. These data were included in the EPA's long-term data base; certain of these data were used to develop treatability levels that form the basis of the final regulations.

Finally, a third round of plant site and sampling visits was undertaken in 1983. Thirty-three plants were visited, and seven plants were sampled. Thirteen of these site visits and one of the sampling visits were conducted at die casting plants, as described above. Site or sampling visits were conducted for several reasons: 1) to observe operations and treatment at die casting plants; 2) to observe operations and treatment and to collect data from small die casters and other small shops; 3) to verify the discharge status of plants reported to have no discharge, especially for air scrubbing operations; 4) to observe high rate or complete recycle operations; 5) to collect data on chemical addition and sedimentation treatment technology or on chemical addition, sedimentation, and filtration technology; and 6) to collect water chemistry data for use in determining the effects of water chemistry on a plant's ability to achieve high recycle rates. A more detailed description of the sampling and analysis program and the data derived from that program can be found in Section V of this document.

March 1984 Notice of Availability of and Request for Comments

As a result of data gathering and verification following proposal, the Agency acquired a large amount of additional information on which to base this rulemaking. On March 20, 1984, the Agency published a Notice of Availability and Request for Comments (49 FR 10280). In addition to requesting further information on several of the proposal issues cited above, the Agency solicited comments on the following: 1) verification of the discharge status of plants in the Agency's data base (especially those plants thought to be zero dischargers); 2) the achievability of the recycle rates being considered by the Agency if regulations were not based on complete recycle; 3) the preliminary recycle model analysis performed by the Agency; 4) the influence of multiple process operations on a plant's ability to achieve a high rate of recycle; and 5) characteristics of

wastewaters from die casting plants.

Comments Received in Response to the March 1984 Notice

The Agency received a number of comments on the March 20, 1984 notice of availability. Many of these comments reiterated concerns expressed regarding the proposed regulation. Listed below are those issues which appeared to be of greatest concern to commenters.

Recycle Model Analysis. Trade associations and some members of industry asserted that the Agency recycle model did not consider central treatment of combined foundry process wastewaters and whether central treatment would affect a plant's ability to achieve high rate or complete recycle.

Environmental Assessment. The Small Business Administration and trade associations requested that the Agency make available an environmental assessment of metal molding and casting discharges. These commenters stated that an environmental assessment would confirm their assertion that many sources of process wastewaters being considered by EPA should be excluded from regulation pursuant to Paragraph 8 of the EPA-NRDC Consent Decree because of the small quantities of pollutants discharged, especially by small plants.

Treatment Effectiveness Data Base. A number of commenters stated that treatment system performance data from plants in the metal molding and casting industry should be used as the basis for determining treatment effectiveness concentrations, rather than the Combined Metals Data Base.

Production Normalizing Parameters. A number of comments made on the proposed regulations were reiterated. These comments objected to the Agency's use of tons of metal poured and tons of sand used as production normalizing parameters for relating process wastewater flow and pollutant loads for wet scrubbers. The production normalizing parameters are used in developing mass-based limitations. The commenters again stated that the air flow through these wet scrubbers (in units of 1000 standard cubic feet [scfm]) should be used as the production normalizing parameter.

Economic Analysis. EPA received comments on the March 20, 1984 notice, as it had on the proposal, that in view of the likelihood of severe economic impact on small plants, EPA must undertake a Regulatory Flexibility Analysis.

Data Gathering Efforts in Response to Comments Received on the March 1984 Notice.

Much of the work conducted after March 1984 was a continuation of efforts that had begun in response to comments on the proposed regulation. Additional work was completed on the recycle model, including analyses of the effect of make-up water quality, sludge

moisture content, and central treatment on achievable recycle rates.

In response to comments concerning production normalizing parameters, a correlation anlaysis was completed for wet scrubbers comparing water use to tons of metal poured, tons of sand used, and air flow through the scrubber. The results of this analysis prompted the Agency to establish air flow, in 1000 scf, as the normalizing parameter for all scrubber-based process segments. Details of this analysis and complete results may be found in the record for this rulemaking.

The Agency also continued its efforts to develop treatment effectiveness concentrations based on plants in the metal molding and casting category. Additional DMR data were obtained, and added to the Agency's data base. Several alternative sets of treatment effectiveness concentrations were developed; Section VII describes these efforts in detail.

February 1985 Notice of Availability and Request for Comments

On February 15, 1985, a second Notice of Availability and Request for Comments, (50 FR 6572) was published to make available to the public the Agency's analysis of the additional data gathered and analyses performed since publication of the March 1984 Notice. Comments were solicited on several additional issues in the second notice: 1) the high concentrations of lead and zinc detected in treated effluents from metal molding and casting plants employing lime and settle treatment; 2) the feasibility of substituting dry scrubbing equipment for wet scrubbing equipment; and 3) the production data used in the economic analysis.

Comments Received on the February 1985 Notice

Many of the comments received on the February 1985 Notice were reiterations of concerns raised on the proposal and first notice. However, several new issues were raised regarding regulatory flow rates and cost estimates. These are described below.

Applied Flow Rates. The Agency received comments on the February 15, 1985 notice which questioned the decreases in some applied flow rates from those published in the March 20, 1984 notice. The process segments specifically noted as having applied flows that decreased were as follows: aluminum die casting, aluminum mold cooling, copper direct chill casting, and zinc die casting. Other comments questioned applied flow rates for certain other process segments and stated that they should be increased. These include the ferrous melting furnace scrubber, ferrous dust collection, and the zinc melting furnace scrubber process segments. Applied flow data for specific plants with wet scrubbers also were questioned.

Finally, a few commenters stated that cupola melting furnaces that have been installed recently have been designed with recuperative energy recovery; they asserted that the normalized applied flow for these new cupolas is much higher than the applied flow allowed by EPA for the ferrous melting furnace scrubber process segment (see Appendix A, February 15, 1985 notice at 50 FR 6579). It was further asserted that additional flow allowances were necessary for multiple venturis, quenchers, after coolers, fan washes, and other ancillary water used in a scrubber system described by one commenter.

Compliance Costs. The cost comments received on the February 15, 1985 notice focused more narrowly on certain aspects of the costs, such as the cost of monitoring for regulated pollutant parameters, operation and maintenance labor requirements, and segregation of noncontact waters from process wastewaters. One commenter, in reviewing the compliance costs for small plants, commented that the Agency's model plant investment costs were correct.

Data Gathering Efforts in Response to Comments on the February 1985 Notice.

Most of the work on the regulation performed after February 15, 1985, focused on properly analyzing the large amount of existing data and on incorporting the results into the regulation, rather than on gathering new data. However, two data gathering efforts were undertaken; these are described below.

The first effort was a result of the Agency's endeavor to develop treatment effectiveness concentrations based on data from metal molding and casting plants. The Agency's preference was to base the concentrations on data from EPA sampling, and on DMR data which had been confirmed by actual sampling data. An attempt was made to confirm as much of the DMR data as possible.

After screening the available DMR reports to determine those plants that have well-operated lime and settle treatment receiving metal molding and casting wastewater, the Agency sent letters requesting additional supporting data and documentation to four plants. EPA requested that each plant submit data from short-term (three days) sampling and analysis of its treatment system influent (raw) and effluent. EPA received short-term sampling data from three of the four plants. One of the four plants did not sample its wastewaters because the data requested were already available without sampling. Based upon these data and documentation, the Agency determined that DMR data for three of the four plants could be considered confirmed and used in the development of final effluent limitations and standards. Data for one of the plants could not be used due to the presence of excessive quantities of noncontact cooling water commingled with process wastewaters in the plant's treatment system. The expanded EPA and confirmed DMR data base, including the data from these three plants, was used to establish lime and settle treatment effectiveness concentrations for the final regulations.

The second data gathering effort conducted after publication of the February 15 Notice was undertaken as a result of comments received concerning melting furnace scrubber flow rates. Commenters asserted that 1) additional flow allowances were necessary for multiple stage scrubbers and for scrubbers with ancillary water use, such as after coolers and fan washing; 2) recently installed cupolas designed with recuperative energy recovery or with below-charge gas take-off systems require a higher applied flow.

In response to these comments, the Agency reviewed available data and also contacted by telephone several plants, as well as manufacturers of those cupola systems and manufacturers of melting furnace scrubbers. The conclusions, reached by data examination and supported by the vendor contacts, were: 1) multiple stage scrubbers do indeed require higher applied flow rates, and 2) the presence of recuperative energy recovery systems on a melting furnace does not increase scrubber water requirements significantly. These conclusions were incorporated into the final regulation.

DESCRIPTION OF THE METAL MOLDING AND CASTING (FOUNDRY) INDUSTRY

The unique feature of the metal molding and casting industry is the pouring or injection of molten metal into a mold, with the cavity of the mold representing, within close tolerances, the dimensions of the finished product. One of the major advantages of this process is that intricate metal shapes, which are not easily obtained by any other method of fabrication, can be produced. Another advantage is the rapid translation of a projected design into a finished article. New articles are easily standardized and duplicated by the casting method.

The metal molding and casting industry ranks sixth among all manufacturing industries based on "value added by manufacturer", according to data issued by the United States Department of Commerce in 1979 (Survey of Manufacturers, SIC 29-30). As of 1978, there were over 3,600 commercial foundries in the United States employing approximately 300,000 workers and producing over 17 million metric tons/year (19 million tons/year) of cast products. These estimates do not include such establishments as art studios, trade schools, and coinage mints, which the Agency does not consider to be commercial facilities.

Plants in this industry include both "job shops" (plants that sold 50 percent or more of their production to customers outside the corporate entity) and "captive plants" (plants that sold 50 percent or more of their products internally or were used within the corporate entity). They vary greatly in metal cast, production, wastewater source and volume, size, age, and number of employees.

Annual casting production has ranged between 15 and 20 million tons during most of the last 20 years. Ferrous castings have accounted for about 90 percent of the total tons produced

annually since 1956. Table III-2 presents domestic foundry shipments by metal type over the past twenty years.

The number of smaller ferrous foundries has dropped dramatically in the past 20 years, while the number of large and medium size ferrous foundries has moderately increased. Among the nonferrous metals, aluminum casting has been increasing whereas the trends for the other metals are mixed. There is a trend toward a decreasing percentage of zinc casting shipments compared with total metal molding and casting shipments and compared to aluminum casting shipments.

The product flow of a typical metal molding and casting operation is shown in Figure III-1. In all types of metal molding and casting plants, raw materials are assembled and stored in various material bins. From these bins, a "furnace charge" is selected by using various amounts of the desired materials. This material is "charged" into a melting furnace and heated until molten. A system for cleaning the melting furnace off-gases is usually present and may be either dry (baghouse or electrostatic precipitator) or wet (scrubber). In ferrous foundries, slag may be removed intermittently from the melting furnace; the slag is usually water quenched for granulation to facilitate disposal.

As the metal is being charged and melted, molds are being prepared. This process begins by forming a pattern (usually of wood) to the approximate final shape of the product. This pattern is usually made in two pieces that will eventually match to form a single piece, although patterns may consist of three or more pieces. Each part of the pattern is used to form a cavity in the moist sand media that forms the mold, and the two portions of the mold (called "cope" and "drag") are matched together to form a complete cavity in the sand media. An entrance hole (called a "sprue") provides the proper path for the introduction of molten metal into the cavity. The mold is then ready to receive the molten metal. In die casting operations, the mold cavity is formed in metallic die blocks which are locked together to make a complete cavity.

The molten metal is now "tapped" from the furnace into the ladle. The ladle and molds are moved to a pouring area and the metal is poured into the molds. The molds are then moved to a cooling area where the molten metal solidifies into the shape of the pattern. When sufficiently cooled, the sand is removed by a process known as "shake out." By violent shaking, the sand surrounding the metal is loosened, falls away, and is returned to the sand storage area. A dust collection system, using wet or dry methods of collection, is usually provided in this area. The sand may be washed and reused. In the case of die casting, where no sand is used, the cast object is removed from the die casting machine after cooling sufficiently to retain its shape. The casting is either further cooled in a water bath or is allowed to air cool on a runout or cooling table.

The cast metal object, called a casting, can be further processed by grinding to remove excess metal. Grinding can be conducted with or without an auxiliary wet or dry air cleaning systems. Castings are cleaned by various methods that complete the removal of the sand and other impurities from their surfaces. These cleaning operations can include washing with water, or may be conducted by physical abrasion such as shot blasting or sand blasting. Dusts generated by shot blasting and sand blasting can be collected in wet air pollution control devices (dust collection scrubbers). Depending on the metallurgical properties desired, some castings may undergo a heat treatment or annealing step that ends with a water quench.

Process wastewaters from the above described operations are the subject of the effluent regulations for the metal molding and casting point source category. About 80 percent of the wastewater covered by this regulation is generated by wet air pollution control devices.

All aluminum, copper, ferrous, and zinc casting is covered under these regulations with the exception of the processes noted below. The casting of ingots, pigs, or other cast shapes related to nonferrous metal manufacturing are not included in this category; these operations are covered under regulations for the nonferrous metals manufacturing category (see 40 CFR Part 421). Whenever the casting of aluminum or zinc is performed as an integral part of aluminum or zinc forming and is located on-site at an aluminum or zinc forming plant, then the aluminum casting operation is covered by the aluminum forming regulations (see 40 CFR 467) and the zinc casting operations are covered under the nonferrous forming regulations (see 40 CFR 471). The casting of ferrous ingots, pigs, or other cast shapes associated with iron and steel manufacture is primarily a dry operation involving no process wastewater and, consequently, no regulations have been developed covering this operation. The casting of copper-beryllium alloys where beryllium is present at 0.1 or greater percent by weight and the casting of copper-precious metals alloys in which the precious metal is present at 30 or greater percent by weight are also excluded from regulation in the metal molding and casting category.

Depending on the final use of the casting, further processing by machining, chemical treatment, electroplating, painting, or coating may take place. Following inspection, the casting is ready for shipment. Wastewaters from these operations are not covered by this regulation. They may be covered by another set of effluent regulations (e.g., electroplating) or may be subject to the permit authority's or municipal facility's best judgment in applying appropriate effluent limitations or standards. These processing operations, if not covered under 40 CFR Parts 467 or 471, are covered by effluent limitations and standards applicable to electroplating and metal finishing. See 46 FR 9462 [January 28, 1981, Part 413] and 47 FR 38462 [August 31, 1982, Parts 413 and 433]. Note that grinding scrubber operations in the aluminum, ferrous, and copper casting subcategories are covered

under the metal molding and casting category.

Metals Descriptions

Many of the cast metals have unique properties that influence the way they are melted and processed and, subsequently, affect the process wastewater characteristics. A brief description of these metals, metal molding and casting equipment, and processes is presented below.

Aluminum

Aluminum is a light silver-white metal weighing 2697 kg/cu m (168.4 lbs/ft^3). It is soft, but possesses good tensile strength. An aluminum structure weighs half as much as a steel structure of comparable strength. It melts at 660°C (1,200°F) and is easily cast, extruded, and pressed. Today aluminum is the second most widely used metal, after iron. Table III-2 indicates that in 1984 over 0.9 million metric tons (0.8 million tons) of aluminum castings were shipped in the United States.

Aluminum may be cast in a variety of ways. A drawing depicting the process and water flow in a typical aluminum investment casting operation is presented in Figure III-2. Figure III-3 shows the process arrangement and water flow schematic for a typical aluminum die casting operation.

Copper

Copper is a red, ductile metal weighing 8956 kg/cu m (559.1 lbs/ft^3). It is second to aluminum in importance of nonferrous metals. It melts at 1,083°C (1,982°F) and has excellent corrosion resistance. Brass and bronze, which are mixtures of copper, tin, lead, and zinc, are two of the most important copper alloys. Other metals used to form copper alloys include manganese, nickel, silicon, and beryllium. Table III-2 provides a recent history of copper shipment tonnages.

Copper and its alloys may be cast in a variety of ways, as depicted in Figure III-4. Figure III-4 also shows the process and process wastewater flow schematic typical of a copper casting operation.

Ferrous

Iron is the world's most frequently and widely used metal. Iron weighs 7870 kg/cu m (491.3 lbs/ft^3). When alloyed with carbon, it has a wide range of useful engineering properties. Alloys of iron include: gray, ductile, malleable, and steel. Tonnages shipped are presented in Table III-2. Figure III-5 displays a typical process and process wastewater flow schematic for ferrous foundries.

Gray Iron is the most popular of the cast irons. It is

characterized by the presence of most of the contained carbon as flakes of free graphite in the iron casting. The tensile strength of gray iron is affected by the amount of free graphite present as well as the size, shape, and distribution of the graphite flakes. Flake size, shape, and distribution are strongly influenced by metallurgical factors in the melting of the iron and its subsequent treatment while molten and by solidification and cooling rates in the mold.

Chemically, gray iron castings include a large number of metals covering a range of composition, with carbon varying from 2 to 4 percent, and silicon from 0.5 to 3 percent, with small amounts of nickel, chromium, molybdenum, and copper frequently added.

Ductile Iron (also known as nodular iron or spherulitic iron) is similar to gray iron with respect to carbon, silicon, and iron content, and in the type of melting equipment, handling temperatures, and general metallurgy. The important difference between ductile and gray iron is that the graphite separates as spheroids or nodules (instead of flakes as in gray iron) under the influence of a few hundredths of a percent of magnesium in the composition. The presence of minute quantities of sulfur, lead, titanium, and aluminum can interfere with, and prevent, the nodulizing effect of magnesium. Molten ductile iron must, therefore, be purer than molten gray iron. However, a small quantity of cerium added with the magnesium minimizes the effects of the impurities that inhibit nodule formation and makes it possible to produce ductile iron from the same raw materials used for high grade gray iron manufacture.

The general procedure for manufacturing ductile iron is similar to that of gray iron, but with more precise control of composition and pouring temperature. Prior to pouring metal into the molds (and in some cases during pouring), the metal is innoculated with the correct percent of magnesium, usually in a carrier alloy, to promote the development of spheroids of graphite on cooling.

While the development of ductile iron dates back to the 1920's, only within the last 20 years has it become an important engineering material. This can be noted from Table III-2 which shows its increasing use.

Malleable Iron is produced from iron, with alloying materials present in the following ranges of composition:

	Percent
Carbon	2.00 to 3.00
Silicon	1.00 to 1.80
Manganese	0.20 to 0.50
Sulfur	0.02 to 0.17
Phosphorus	0.01 to 0.10
Boron	0.0005 to 0.0050
Aluminum	0.0005 to 0.0150

Low tonnage foundries use batch-type furnaces (e.g., electric arc introduction or reverberatory). The tapping temperature of the iron is 1,500°C-1,600°C (2,700°-2,900°F) depending on the fluidity required. In large tonnage shops needing a continuous supply of molten malleable iron, electric furnaces or duplexing systems are employed. Cupola furnaces are common in some malleable shops, especially for the production of pipe fittings. After the iron casting solidifies, the metal is a brittle white iron. Malleable iron castings are produced from this white iron by heat treating processes which convert the as-cast structure to a "temper carbon" grain structure in a matrix of ferrite. This is an annealing process requiring proper furnace temperature/time cycles and a controlled atmosphere.

Steel is the fourth ferrous alloy covered by this regulation. The making and pouring of steel for castings is similar to the casting of steel into ingots. One major difference from steel mill practice is the higher tapping temperature necessary to attain the correct fluidity, which is needed to pour the steel into molds. The melting furnaces in foundries are generally of the same type as those for steel mills but are smaller. Only a thoroughly "killed" (deoxidized) steel is used for foundry products. Molding practices are similar to those of gray iron operations; however, precautions are required for the higher pouring temperatures--1,800°C (3,200°F). Mold coatings or washes are used to give a better finish and molds are generally made of more refractory-like materials to resist metal penetration. Cast steels generally have the following ranges of composition:

	Percent
Carbon	0.20 to 1.00
Silicon	0.55 to 0.80
Manganese	0.60 to 1.20
Sulfur	0.03 to 0.05
Phosphorus	0.035 to 0.06

Magnesium

Magnesium is a silver-white metal weighing 1,751 kg/cu m (108 lbs/ft^3). On an equal weight basis, magnesium is as strong as or stronger than any other common metal. It can be melted in the same types of furnaces used for aluminum or zinc. However, magnesium is a strong reducing agent and is a dangerous fire hazard, especially when molten. Because of the nature of molten magnesium, care must be exercised in selecting refractories and other materials that may contact the molten metal.

Magnesium furnaces are usually of the stationary or tilting crucible type and are heated by gas, oil, or coreless electric induction units. The crucibles are made of low carbon steel with nickel and copper contents below 0.10 percent. Magnesium is usually alloyed with aluminum, zinc, manganese, or rare earth metals for foundry work.

Most magnesium is cast in sand molds. The practice for sand casting of magnesium alloys differs from most other metals in the precautionary measures required to prevent metal-mold reactions. Inhibitors such as sulfur, boric acid, potassium fluoroborate, and ammonium fluorosilicate are mixed with the sand to prevent these reactions. Molding sands for magnesium alloys must have high permeability to permit the free flow of mold gases to the atmosphere.

Table III-2 indicates the growth of magnesium foundry production. A general process schematic is presented in Figure III-6.

Zinc

Zinc is a bluish-white metal weighing 7136 kg/cu m (445 lbs/ft^3). It has a hexagonal close-spaced crystal structure. Zinc melts at 420°C (780°F) and boils at a temperature of 907°C (1,665°F). Its low melting temperature, very small grain size and adequate strength make zinc and zinc alloys well suited for die casting, which is the process most often used to shape zinc products. Typical zinc alloy compositions consist of 0.25 percent copper, four percent aluminum, 0.005 to 0.08 percent magnesium, and traces of lead, cadmium, tin, and iron.

Furnaces used in melting and alloying zinc are usually the pot type, although immersion tube and induction furnaces are also used. Good temperature control is a necessity for both melting and holding furnaces.

Table III-2 indicates the decreasing shipments of zinc castings. A zinc die casting process schematic is presented in Figure III-7.

DESCRIPTION OF METAL MOLDING AND CASTING INDUSTRY PROCESSES

After reviewing the data provided in the responses to the DCP questionnaires, the Agency developed a list of the metal molding and casting industry operations that generate process wastewaters. The data presented in the plant survey responses indicate that the major sources of wastewaters and wastewater pollutants are the air pollution control devices used in conjunction with metal molding and casting processes. The following sections describe the wastewater generating operations noted in the plant survey data base.

Melting Furnaces

Melting furnace scrubbers contact the gaseous emissions from a melting furnace with a clean water stream, which removes particulates, sulfur and carbon oxides from the gaseous emissions. As a result, these scrubbers generate process wastewaters contaminated with the pollutants carried by the furnace emissions. The following melting equipment descriptions are provided as a basis for discussion of the various types of scrubbers used in melting furnace operations.

Cupola Furnace

The cupola furnace is a vertical shaft furnace consisting of a cylindrical steel shell, lined with refractory and equipped with a wind box and tuyeres for the admission of air. A charging opening is provided at an upper level for the introduction of melting stock and fuel. Holes and spouts for the removal of molten metal and slag are located near the bottom of the furnace.

Air for combustion is forced into the cupola through tuyeres located above the slag well. The products of combustion, i.e., particles of coke, ash, metal, sulfur dioxide, carbon monoxide, carbon dioxide, etc., and smoke comprise the cupola emissions. In many cases, air pollution emission standards require that these emissions be controlled. Wastewaters are generated in this process as a result of using water as the medium for scrubbing furnace gases.

The cupola has been the standard melting furnace for gray iron. Figures III-8 and III-9 illustrate cupola furnace systems.

Electric Arc Furnaces

An electric arc furnace is essentially a refractory-lined hearth in which material can be melted by heat from electric arcs. Arc furnaces are operated in a batch fashion with tap-to-tap times of one and one-half to two hours. Power, in the range of 551-662 kwh/metric ton (500-600 kwh/ton), is introduced through three carbon electrodes. The molten metal has a large surface area in relation to its depth, permitting bulky charge material to be handled. This large surface area to depth ratio is also effective in slag to metal reactions as the slag and metal are at the same temperature. Arc furnaces are not generally used for nonferrous metals, because the high operational temperatures of the arc tend to vaporize the lower melting temperature metals.

The waste products from the arc melting process are smoke, slag, and oxides of iron emitted as submicron fumes. Carbon monoxide and dioxide gases are formed when the electrodes are consumed during the melting process. Dry air pollution control equipment such as baghouses are generally used to control electric arc furnace emissions; however, wet scrubbers may be used. In at least five instances in the metal molding and casting data base, wet venturi scrubbers are used to clean emissions from electric arc furnaces.

Induction Furnaces

Induction melting furnaces have been used for many years to produce nonferrous metals. Innovations in the power application area during the last 20 years have enabled these furnaces to be competitive with cupolas and arc furnaces in gray iron and steel production. This type of furnace has some very desirable features. There is little or no contamination of the metal bath, no

electrodes are necessary, composition can be accurately controlled, good stirring is inherent, and while no combustion occurs, very high temperatures are obtainable.

There are two types of induction furnaces: (a) coreless, in which a simple crucible is surrounded by a water-cooled copper coil carrying alternating current, and (b) core or channel, in which the molten metal is channeled through one leg of a transformer core. The induction furnace provides good furnace atmosphere control, since no fuel is introduced into the crucible. As long as clean materials such as castings and clean metal scrap are used, no air pollution control equipment is necessary. If contaminated scrap is charged or magnesium is added to manufacture ductile iron, air pollution control devices are required to collect the fumes that are generated.

Reverberatory Furnace

A reverberatory furnace operates by radiating heat from the burner flame, roof, and walls onto the material to be heated. This type of furnace was developed particularly for melting solids and for refining and heating the resulting liquids. It is generally one of the least expensive methods of melting because the flames come into direct contact with the solids and molten metal. A reverberatory furnace usually consists of a shallow refractory lined hearth for holding the charged metal. It is enclosed by vertical side and end walls, and covered with a low arched roof of refractories. Combustion of fuel occurs directly above the charge and the molten bath. The wall and roof receive heat from the flame and combustion products and radiate heat to the molten bath. There are many shapes of reverberatory furnaces, with the most common type being the open hearth style used in steel manufacture. However, the cost of pollution control equipment, as well as inefficiencies in handling the metal, have caused this type of furnace to become obsolete in steel and gray iron manufacture. Reverberatory furnaces are still widely used in nonferrous production.

The products of combustion from reverberatory furnaces are conducted to a stack and exhausted to the atmosphere. Contaminants such as smoke, carbon monoxide and dioxide, sulfur dioxide, and metal oxides must be removed from the exhaust gases. These become process wastewater pollutants when scrubbers are used to clean the combustion gases.

Crucible Furnace

Crucible furnaces, which are used to melt metals having melting points below 1,900° (2,500°F), are constructed of a refractory material such as a clay-graphite mixture or silicon carbide, and are made in various shapes and sizes. The crucible is set on a pedestal and surrounded by a refractory shell with a combustion chamber between the crucible and the shell. The crucible is usually sealed or shielded from the burner gases to prevent contamination of the molten metal.

There are three general types of crucible furnaces -- tilting, pit, and stationary. All have one or more gas or oil burners mounted near the bottom of the unit. The crucible is heated by radiation and contact with hot gases. The exhaust gases contain only products of hydrocarbon combustion and generally are not controlled.

Melting Furnace Air Pollution Control Methods

The preceding discussion on the various types of melting units used in the remelting of metal describes the source of the fumes, particulates, smoke and other waste products that comprise furnace emissions. These emissions constitute a major source of air pollution and thus must be cleaned before they are released to the atmosphere. Emissions may be cleaned by either dry air pollution control methods or by wet air pollution control methods, also known as scrubbing.

When wet air pollution control equipment, or scrubbers, are used to control furnace emissions, the contaminated gases are brought into contact with a scrubbing liquor, usually water. The particulates and fumes are removed from the gases and enter the water. Thus scrubbers are a major source of process wastewater. Dry air pollution control methods do not generate a process wastewater. The most common types of dry and wet air pollution control equipment are described in the following section.

Dry Air Pollution Control Methods

Electrostatic Precipitator: Electrostatic precipitation is a physical process by which a particle suspended in a gas stream is charged electrically and then, in the influence of an electrical field, is separated and removed from the gas stream. An electrostatic precipitation system consists of a positively charged collecting plate in close proximity to a negatively charged electrode. A high-voltage charge is imposed on the electrode, which establishes an electrical field between the electrode and the grounded collection surface. The dust particles pass between the electrodes, where they are negatively charged and diverted to the positively charged collection plate(s).

Periodically, the collected particles must be removed from the collecting surface. This is done by vibrating and/or water washing the surface of the collection plates to dislodge the dust. The dislodged dust drops into a dust removal system and is collected for disposal.

Fabric Media (Baghouse): The collection of particulate matter is achieved by entrapment of the particles in the fabric of a filter cloth that is placed across a flowing gas stream. These dust particles are removed from the cloth by shaking or back flushing the fabric with air. Filtration does not remove from the furnace exhaust such gaseous contaminants as: carbon monoxide, carbon

dioxide, phenols, hydrogen chloride, hydrogen sulfide, nitrogen and its oxides, ammonia, hydrogen, and water vapor. The quantities of these contaminants depend on the type of fuel, furnace efficiency, and degree of air infiltration into the gas stream. Baghouse particulate removal methods have been developed to a high degree of efficiency (97-99 percent removal of particulate matter).

The cloth filter media (baghouse) has a temperature limit of approximately 121°C (250°F). The gases can be cooled to this temperature by long runs of duct work between the furnace and the baghouse. The ductwork acts as a radiator to cool the gases. Such systems are completely dry operations.

Other installations have quench towers between the furnace and the baghouses. In the quench tower, the hot gases encounter a water spray. The water evaporates, thereby cooling the hot gases prior to their entry into the baghouses. This quench chamber usually is arranged to provide a sharp reversal in the direction of the gas stream and a sudden reduction in flow velocity. These features, coupled with the cooling effect achieved by the evaporation of the water, cause the larger dust particles to be deposited at the bottom of the chamber, from which they are periodically removed. The gases then flow to the filter chamber.

Although the primary purpose of a quench tower is to cool the furnace off-gases, the water spray also absorbs many of the gaseous contaminants listed above, which are not removed in a baghouse. Quench towers are also used in conjunction with electrostatic precipitators. If water does not fully evaporate and is discharged from a quench tower, the quench tower would be considered to be a wet air pollution control device.

Wet Air Pollution Control Methods

Wet air pollution control devices, or scrubbers, remove particulates and fumes from contaminated gases by bringing the gases into contact with a scrubbing liquor, usually water. There are many different types of scrubbers; several of the most common are discussed below.

Venturi Scrubber: This scrubber consists primarily of a Venturi tube fitted with spray nozzles at the throat. The dust-laden gases flow axially into the throat, where they are accelerated to 61 m/sec (200 ft/sec). Water is sprayed into this throat by a ring of nozzles. This produces a dense, mist-like water curtain. The water droplets in this curtain entrap the dust particles. In the subsequent diffuser, the velocity is reduced and inertia is used to separate the droplets from the gas stream. Venturi scrubbers require 15-100 inches (water) of pressure drop across the gas stream. They are very effective on particulate matter in the range of one micron and readily adsorb many furnace gases, thus adding many pollutants to the process wastewaters.

Wet Cap: The "wet cap" method is an attempt to reduce the particulate emissions in waste gases by passing them through a water stream or water curtain. This method, operated with a low pressure drop, can be added to existing cupolas with only minor changes to equipment and operations. Figure III-9 depicts this method.

Washing Coolers: Several general designs of washing coolers are used; however, all provide some means of securing a long retention time to keep the gases in contact with the scrubbing liquor. In general, these units consist of a large cylindrical vessel with the gases entering tangentially at the bottom and exiting through the top center. Several levels of sprays bring the scrubber liquor into contact with the rising gases. The bottom is usually conical, with a large pipe outlet to return the dirty liquor to a settling area.

Packed Tower: Another type of scrubber, known as the bulk bed washer or packed tower, contains water-sprayed gravel beds. The gases enter in a downward or tangential direction, which results in preliminary dust removal due to inertia. The gases then flow upward through a wetted gravel bed. At the upper face of this bed, the gas velocity creates a turbulent water zone that brings the finest dust particles into contact with the water. The scrubbing liquid is sprayed above this gravel bed and continually washes it. The liquid is removed at the bottom of the gravel bed and may be either recirculated or discharged. Above the spray heads is a droplet catcher that removes the droplets from the rising gas stream. This scrubbing method requires approximately 10 inches (water) of pressure drop and is not effective on particles smaller than one micron.

Figure III-8 illustrates a packed tower scrubber. The figure also illustrates one method of recovering some of the heat from the gas stream.

Dust Collection and Grinding Scrubbing Equipment

Foundries that use sand as a molding media must collect and control the dusts produced in handling and using this sand. Sand, as used in metal molding, is mixed with one or more materials that coat the sand grains and act as a binder to hold the sand in the form of the pattern. These binders are a major source of organic pollutants in metal molding and casting operations. Fumes and odors result from core and mold making, as well as from the pouring of hot metal into the molds. The cleaning of the castings to remove traces of sand, gates, runners, heads, mold flashings, and mismatch also produce dust and fumes which are removed from the work place.

Many of these dusts are collected on fabric media in baghouses such as those described above. In many instances, it is more economical or more efficient to remove these airborne particles by entrapping them in a spray or mist. The more common types of "wet dust collectors" are examined below.

Spray Chambers

The simplest type of wet scrubber is a chamber in which spray nozzles are placed. The gas stream velocity decreases as it enters the chamber. The particles are wetted by the spray, settle, and are collected at the bottom of the chamber.

Cyclone Scrubbers

Cyclone scrubbers feature a tangential inlet to a cylindrical body. Water is injected through spray nozzles which break the water into many droplets. These droplets contact the particles and decrease their velocity, with the result that the particles impinge on the vessel sides and are flushed to the bottom. The clean gases then exit through the top of the scrubber. Baffles in this exit collect and aid in the removal of the water droplets from the gas streams.

Orifice Scrubbers

Orifice scrubbers utilize the velocity of the gas stream to provide liquid contact. The flow of gases through a restricted passage partially filled with water causes the dispersion of the water into many droplets that intimately contact and wet the airborne dusts and absorb some of the gaseous contaminants. While the amount of water in motion is large, most of the water can be recirculated without pumps.

Mechanical-Centrifugal Scrubbers

A spray of water at the inlet of a fan becomes a mechanical-centrifugal collector. The collection efficiency is enhanced by the entrapment of dusts on the droplet surface and the impingement of the droplets on the rotating blades. The spray also flushes the blades of the collected dusts. However, this spray can substantially increase corrosion and wear on the fan.

Another type of mechanical collector uses a rotating element to generate a spray of water droplets into a dust laden gas stream. The wetted particles flush to a collection pan where they can settle while the water is recirculated.

Venturi Scrubbers

Venturi scrubbers have been described in the section on melting furnace scrubbers. They are also used in dust collection systems. In some cases there is a single large Venturi in the dust-laden air stream with low pressure water added at the Venturi throat. The extreme turbulence breaks the water into a fine spray that impacts and wets the dust particles.

Other applications are similar to orifice-type scrubbers, but with the Venturi's shape replacing the orifices. These Venturis are located at the water line and, consequently, water is drawn

into the Venturi throat where it is broken into a fine spray by the turbulent air. The spray droplets wet the dust particles and are impinged against baffle plates and drain to the reservoir.

Packed Towers

This device is similar to the bulk bed washer described in the melting furnace scrubber section. The dust-laden gases pass through a bed of granular or fibrous collection material. Liquid is continually flushed over the surface of the collection material to keep it wet and clean, and to prevent re-entrainment of the particles. Collection efficiency depends on the length of time the gas stream is in contact with the collecting surfaces. The collecting material should have a large ratio of area to weight and be of a shape that resists close packing. Coke, broken rock, glass spheres, and Raschig rings are materials that are often used as tower packing materials.

A cone-shaped bottom aids in removing settled dust particles from the liquid, while mist eliminators located in the exit gas-stream reduce the loss of the flushing liquor. Recirculation of the liquor is usually practiced.

Wet Filters

A wet filter consists of a spray chamber with filter pads composed of glass fibers, knitted wire mesh, or other fibrous materials. The dust is collected on the spray pads as the dust laden gas stream is drawn through the pads. Sprays directed against the pads wash the dusts away. The water drains to a reservoir, where it is settled or clarified and then recirculated or discharged.

Casting Methods

Foundries use several methods to cast molten metal into its final shape. These methods are described below, along with the sources of process wastewater associated with each method. In general, intimate contact between molten metal and water is avoided because of the potential development of explosive forces caused by a too rapid generation of steam. Thus, process wastewater is usually generated by the cleaning or cooling of partially cooled castings, as well as hydraulic oil or noncontact cooling water leakage.

Sand Casting

Green Sand Castings: This is the most widely used molding method. It utilizes a mold made of compressed, moist sand. The term "green" denotes the presence of moisture in the molding sand and that the mold is not dried or baked. This method is usually the most expedient, but is generally not suitable for large or very heavy castings.

Dry Sand Castings: Most large and very heavy castings are made in dry sand molds. The mold surfaces are given a refractory coating and are dried before the mold is closed for pouring. This hardens the mold and provides the strength necessary to contain large volumes of metal. Molds hardened by the CO_2 process may also be considered in this category. Such molds are not dried, but are made from an essentially moisture free sand mixture containing sodium silicate. The mold is rapidly hardened by the reaction of carbon dioxide gas with the silicate. The process can also be used for making cores.

Shell Mold Castings: This method is of recent development and utilizes the unique process of making molds by forming thin shells of a resin-bonded sand over a hot pattern. It is suitable for small and some medium-sized castings. Shell molding provides improved accuracy and surface finish, thus allowing greater detail and less drift than would normally be expected in green sand molding. Metal patterns of special construction are necessary. The process is of particular advantage when it provides savings in machining and finishing. The shell process has also been very effectively applied in making cores, which may be used with any of the molding methods.

Core Mold Castings: Castings of unusual complexity (such as the thin and deep fins of an air-cooled engine cylinder) may be produced in a mold made of the type of sand commonly used for cores. This sand has almost free-flowing properties when it is packed around the pattern, and it will fill crevices and reproduce detail. After baking, the mold becomes strong enough to resist the forces of flowing molten metal. Core sand molds may be used when complexity requires more than one parting line in a casting. Core sand sections may be used to form a complex external portion of a casting in either a green or dry sand mold, just as cores are used to form internal surfaces.

Permanent Mold Castings: Certain types of iron castings can be produced in large numbers from mechanically-operated permanent iron molds. This mechanized, high-production process is mainly used for castings of suitable shape, of less than 11.4 kg (25 pounds) in weight, and with 0.48 cm (3/16") minimum wall thickness. Cores are formed with conventional sand or shell cores.

Ceramic Mold Casting: Certain highly-specialized castings requiring an unusually fine finish, precise detail, and close tolerances are produced in molds made of fired ceramics. Pattern equipment is generally of a "core-box" type, and may be made of metal or plaster. In some applications, backdraft or undercuts are allowed by making part of the pattern of a flexible material. When the mold can be assembled from a number of pieces, castings of several hundred pounds in weight and several feet in a major dimension can be made to relatively close tolerances.

Centrifugal Casting Operations

Centrifugal casting includes a number of different processes in which the mold rotates at high speed, setting up a centrifugal force. This force is used to fill the mold, shape the casting, and help solidify and strengthen the metal. There are two types of centrifugal casting: vertical and horizontal. Vertical casting employs rotation around a vertical axis to provide pressure which forces the molten metal into a mold. It provides good filling of the mold, high dimensional accuracy, and a dense structure in the casting. Components with very thin sections are difficult to produce by static means and thus vertical centrifugal casting is often used. Such components include gears, piston rings, impellers, propellers, bushings, etc.

Horizontal centrifugal casting is widely known as a method of producing pipe, but it is also used for a variety of other long, hollow castings such as engine cylinder liners, process rolls and gun barrels. In this method, the mold rotates at high speed around a horizontal axis. Molten metal is fed into the interior of the mold and is distributed around it by centrifugal force. The external diameter of the casting corresponds to the internal diameter of the mold; however, no core is used,so that the internal diameter of the casting varies with the amount and feed rate of molten metal. This produces a sounder and more uniform casting than static means.

Investment Casting Operations

In the investment casting process, an expendable pattern of the desired product is shaped of wax or plastic. The pattern is then surrounded by a ceramic slurry or backup material that hardens at room temperature. The expendable pattern is then melted out, leaving a very precise cavity in the ceramic material. This is also called the lost wax process.

After the wax pattern is melted out, all moisture in the ceramic backup material is eliminated in an autoclave where temperature can be closely controlled. Molten metal is then poured into the mold and allowed to cool. Finally, when the metal has solidified, the mold is broken away to reveal the casting. Final cleaning is accomplished by high pressure water jets in a hydroblast cabinet. This is a source of process wastewater.

Direct Chill Casting

In direct chill casting, molten copper is tapped from the melting furnace and flows through a distributor channel into a shallow mold. Noncontact cooling water circulates within this mold, causing solidification of the copper. The base of the mold is attached to a hydraulic cylinder which is gradually lowered as pouring continues. As the forming ingot leaves the mold it is sprayed with contact cooling water. The cylinder continues to travel down into a tank of water, which further cools the ingot as it is immersed. When the cylinder has reached its lowest

position, pouring stops and the ingot is lifted from the pit. The hydraulic cylinder is then raised and positioned for another casting cycle.

In direct chill casting, lubrication of the mold is required to ensure proper ingot quality. Much of the lubricant volatilizes on contact with the molten copper but contamination of the contact cooling water with oil and oily residues does occur.

Die Casting

In sand casting and investment casting, the mold is broken up after each casting operation. In die casting, however, the mold or "die" is made of metal and can be used many times. Dies produce castings of high dimensional accuracy, with smooth and clean surfaces.

Three types of die casting can be distinguished, depending on the type of force used to drive the metal into the mold: gravity, pressure, or vacuum. For simple gravity castings, the metal may be poured into the die from the top. However, for most gravity castings, the die is a closed and complex assembly and such devices as cores, gates, and risers are employed. Pressure die casting forces the molten metal into a mold under considerable pressure, making possible the production of large numbers of intricate castings at a rapid rate. Vacuum die casting is less widely used; in this process, air is evacuated from the die, which sucks the metal in and compacts it.

In most die casting operations, the major sources of wastewaters are the die casting machine hydraulic oil leakage, mold cooling water leakage, casting quenches, and mold lubricant spray. Often these wastewaters are collected around the machine base and are contaminated by dirt and oil and grease from various fittings.

The application of lubricants to the die cavity is a necessary and often critical process. Lubricants prevent a casting from sticking to the die, and also provide a better finish to the casting. The correct lubricant will permit metal to flow into cavities that will not otherwise fill properly. A secondary function of a lubricant is cooling of the die.

When molten metal contacts an oil type lubricant, some of the lubricant decomposes and leaves a carbonaceous powder on the die surface. This can be removed from the die surface with an air jet. Moving die parts, such as ejectors and cores, must be treated with a high temperature lubricant to prevent seizure. Oil suspensions of graphite are usually used on these moving parts. Many of these compounds are carefully developed for specific machines and represent a considerable expense. The recovery and reclamation of these materials is an important phase of the die casting operation. Several plants have segregated their waste streams and employ die lubricant recovery processes.

Casting Cleaning

During the casting process, many impurities adhere to the cast product. These impurities include sand, die lubricants, mold lubricants, and metal dusts. The final product may be cleaned of these impurities through use of a water spray or other application of water. The water used for cleaning becomes contaminated with these impurities and is considered a process wastewater.

Casting Quench

Casting quench operations involve the immersion of a casting in a water bath that sometimes contains additives. Quenching may be performed for two reasons: 1) to solidify the casting more quickly, or 2) to obtain certain desirable metal grain structures that result from rapid thermal changes.

Casting quench is most commonly associated with die casting operations in which a completed casting is ejected from the die and falls immediately into the quench bath. This is done primarily to solidify the metal quickly, reduce the machine cycle time, and increase production.

Many aluminum die casting plants have replaced the quench with a runout table on which the castings air cool. This eliminates the generation of the process wastewater associated with quenching. However, depending on the configuration of the casting, zinc castings may sag if allowed to air cool. Thus the trend to eliminate quenching is not as prevalent in zinc die casting operations.

Mold Cooling

When permanent molds are used in the casting process, it is often necessary to cool the molds with water sprayed or flushed over them. This water becomes a process wastewater and contains contaminating materials picked up from the molds. Mold cooling can also be accomplished by internal circulation of water through the mold. This water is considered to be noncontact cooling water and thus is not covered by this regulation unless it leaks or is otherwise allowed to commingle with process water.

Slag Quench

In most melting operations, a mixture of non-metallic fluxes is introduced into the furnace along with the metal charge. This mixture acts as a scavenger to remove impurities from the molten metal. The flux and impurities thus produced are removed from the molten metal as "slag" or "dross." After removal, the slag is cooled for disposal or reclamation. In ferrous foundries, the amount of slag produced requires disposal on a large scale. Where the slag is continuously produced (i.e., in a cupola operation), it is quenched in a water stream to rapidly cool and fragmentize it to an easily handled bulk material. The quench

water is a process wastewater.

In nonferrous metal molding and casting plants, the slags generated are considerably smaller in volume and mass than those generated in ferrous foundries and are handled without producing a process wastewater.

Sand Reclamation

In the many plants that use sand as a molding medium, the reclaiming and reuse of the sand is a major operation. Three methods of reclaiming sand are in general use: dry, wet, and thermal.

The dry methods generally include screening, lump breaking, and cooling before reuse. These processes usually produce a dust from the handling of the sand, but no process wastewaters result unless a wet dust collector is used.

The wet method has several variations. Generally, a slurry is made of sand and water. Agitating or stirring this slurry causes the sand grains to scrub against each other and remove the particles of burnt clay, chemical binders, sugar, wood fiber, etc., which may adhere to the sand grains. The slurry is pumped to a classifier for separation of the fine grain materials. The sand is then dried.

The thermal method involves heating the sand to 649-816°C (1,200-1,500°F) in air to remove carbonaceous material. Some clay may also be removed by abrasion of the sand grains as they travel through the process. The thermal reclamation process does not produce a process wastewater.

The wash water used in wet reclamation contains considerable contaminants in the form of fine silicate material, spent clay, and other pollutants. To economize on water use, this water can be clarified and returned to the sand washing system. Several examples of water reuse from wet sand reclamation processes are found in the DCP data base.

Grinding Scrubber

Dusts produced in sawing, grinding, or rough or preliminary machining of metals are collected in a scrubber. As in other dust scrubbers, a water spray coats the dust laden-gas stream, and wets the metal dust particles, which then settle.

Scrubbers of grinding or sawing dusts can be of several types, as previously described. Where practicable, the dust from such metal working operations can be salvaged and remelted.

Magnesium Grinding Scrubbers

Finely divided particles of magnesium can react violently in air. It is mandatory that magnesium dusts be wetted to prevent this reaction. Therefore, all dusts produced in sawing, grinding, or rough or preliminary machining of magnesium are collected in a scrubber. The water spray coats the dust-laden gas stream and wets the magnesium particles, eliminating the fire hazard.

Magnesium grinding scrubbers are similar to other dust scrubbers.

PROFILE OF PLANTS IN THE METAL MOLDING AND CASTING POINT SOURCE CATEGORY

The profile of the metal molding and casting industry is based upon the technical data furnished to the Agency by plants engaged in metal molding and casting operations. The industry profile is organized into the following five topics. The discussion of each topic follows:

1. Distribution of wet and dry plants
2. Process wastewater profile-flow and discharge mode
3. Production profile
4. Production equipment age and treatment equipment age
5. Land availability for installation of treatment equipment

Distribution of Wet and Dry Plants

Analysis of the survey data reflective of 1976 and the updated survey conducted in 1981 indicated that an estimated 3,853 plants will manufacture castings applicable to this point source category in 1986. One thousand-fifty-nine (1,059), or 27 percent, operate manufacturing processes that result in the generation of a process wastewater. These are considered "wet" plants. Of those 1,059 wet plants, 301 discharge directly to surface waters and 499 discharge indirectly to POTWs. The remaining 259 plants have no discharge of process wastewater - either they recycle 100 percent of their wastewater, or the wastewater is contained in an on-site impoundment.

Plants that produce no process wastewater are considered to be "dry" plants. Two thousand seven hundred ninety-four (2,794) of the 3,853 active metal molding and casting plants are dry. This distribution is presented below:

Type of Plant	Number of Plants in the Category
Wet Plants:	
Direct Dischargers	301
Indirect Dischargers	499
Zero Dischargers	259
Total Wet Plants:	1,059
Dry Plants:	2,794
Total MM&C Plants: (Wet & Dry)	3,853

The distribution of wet and dry plants by major metal cast and employment size group is presented in Table III-3. Following is a summary of the data presented in this table.

Type of Metal Cast	Percent of the Plants Casting This Metal That Generate a Process Wastewater*
Aluminum	11.6
Copper	11.0
Ferrous	47.1
Magnesium	58.3
Zinc	21.7

*Based upon 1980 operations.

The Agency has determined, as shown on Table III-3, that 73 percent of the plants in the category are dry, while 27 percent of the plants are wet.

Table III-4 presents the percentage of wet operations in each employment size group in each subcategory. This table indicates that smaller metal molding and casting operations, as distinguished by the number of employees, are less likely to generate a process wastewater than the metal molding and casting plants in larger employment size groups. This trend is illustrated below.

Employment Size Group	Percent of Active Plants in Each Group that are Dry
<10	98.7
10-49	84.0
50-249	51.4
<250	22.5

The main reason for the trend noted above is the different air pollution requirements for plants of various sizes. The small metal molding and casting plants still in operation are generally job shops that do not require large capacity production equipment. As a result, the air pollution impact from these shops is much smaller than from large production facilities, and

for economic reasons, baghouses are preferred for emission control where required. Melting furnaces typically are small and are not required to have scrubbing devices in many states. In addition, most sand handling activities in small shops are performed by hand and, subsequently do not produce the large volume of dust associated with mechanical sand handling equipment. Therefore, many of the small plants have not installed wet air pollution control devices to control air emissions for these operations.

Process Wastewater Profile - Flow and Discharge Mode

About 318.5 billion liters (84.1 billion gallons) of metal molding and casting process wastewater are generated each year - 186.3 billion liters (49.2 billion gallons) generated by processes which discharge to navigable waters, and 132.2 billion liters (34.9 billion gallons) generated by process which discharge to publicly owned treatment works. The complete distribution of foundry process wastewaters is presented below.

Distribution of Process Wastewaters

Subcategory	Amount Generated by Direct Dischargers (10^6 gal/yr)	Amount Generated by Indirect Dischargers (10^6 gal/yr)	Total (10^6 g/yr)	Percent of Category Total
Aluminum	1,448	957.3	2,406	2.9
Copper	10,240	1,766	12,010	14.3
Ferrous	37,290	31,650	68,950	81.9
Magnesium	0.1810	2.47	2.65	0.003
Zinc	244.6	530.2	774.8	1.0
Total	49,230	34,910	84,140	100

The subcategories ranked in decreasing volume of total process wastewater generated are: ferrous casting, copper casting, aluminum casting, zinc casting, and magnesium casting. Process wastewaters generated by direct discharging ferrous plants account for 76 percent of the total volume of water generated by direct dischargers for the category. Similarly, 91 percent of the total volume of process wastewaters generated by plants that discharge to POTW'S results from the casting of ferrous metals. A more detailed process wastewater flow profile is presented in Section V.

Production Profile

For the purposes of this document, the term production is used to express the mass of metal poured and not the weight of finished castings produced by, or shipped from, those plants within the metal molding and casting point source category.

An estimated 55.2 million metric tons (60.8 million tons) of metal are poured annually in plants which generate a process wastewater in their metal molding and casting processes. Approximately 29.7 million metric tons (32.8 million tons) of metal are poured annually in plants discharging process wastewaters directly to navigable waters. Ten million metric tons (11 million tons) of metal are poured annually in plants which introduce process wastewaters into POTWs. An estimated 15.4 million metric tons (17.0 million tons) of metal are poured in plants which do not discharge process wastewaters (or 28 percent of the total annual amount of metal poured). This distribution is presented below.

Distribution of Foundries Production

Type of Plant	(Millions of metric tons) Production	Percent of Total
Indirect Dischargers	10	18
Direct Dischargers	29.7	54
Zero Dischargers	15.4	28
All Wet Foundries	55	100

In determining the estimate for "no discharge" operations, only the weight of metal poured at plants which do not discharge process wastewaters from any metal molding and casting process was considered. For example, the weight of metal poured at a plant with one process which did not have a wastewater discharge and one process discharging to a POTW was included in the estimate for the POTW discharge group.

For those plants that generate process wastewater, 65 percent of all the metal melted is poured in 25 percent of the plants. Ninety-seven percent of the metal poured in these wet operations is ferrous metal; Gray iron represents 70 percent of the total weight of all ferrous metal poured.

Production Equipment and Treatment Equipment Age

The treatment technologies chosen as the basis of this regulation are applicable to both old and new plants. This assertion is supported by several observations about the metal molding and casting industry data base.

As discussed earlier, plants in the data base appear to have a wide range of ages in terms of initial operating year. The general plant summary tables in the record for this rulemaking present each plant's age in terms of its oldest melting furnace as well the age of its treatment systems. However, plants must be frequently modernized in order to remain competitive. Plants

may be updated by modernizing a particular component, or by installing new components. For example, an old furnace might be equipped with oxygen lances to increase the throughput, or it might be replaced entirely by a new, more efficient furnace. Modernization of production equipment and air pollution control equipment produces similar wastes among all plants producing a given metal by a given process. It follows that similar wastewater treatment technology can be applied to these similar wastes.

An examination of the metal molding and casting data base shows that some foundries have operated at the same location for over 100 years, but have replaced melting furnaces as recently as five years ago, and have replaced sand handling systems as recently as ten years ago. Although the age of the plant is over 100 years, the wastewater generated would be analogous to that of plants built more recently, and the discharges would be equally amenable to treatment.

In addition, metal molding and casting industry data indicate that about half of the plants in the data base installed process wastewater treatment equipment five or more years after the installation of the oldest melting furnace. In fact, nine percent of the ferrous foundries in the data base installed process wastewater treatment equipment as long as 30 years after the installation of the oldest melting furnace. This further supports the observation that the age of a plant has no correlation with the plant's ability to install water pollution control equipment.

Land Availability for the Installation of Wastewater Treatment Equipment

In the DCP surveys, the Agency requested that the plants provide information on the amount of land available for the installation of wastewater treatment equipment. About 90 percent of all the respondents to the question on the DCP reported that sufficient land was available for the installation of wastewater treatment equipment.

Of the ten percent that did express some concern regarding land availability, one third reported that no process wastewaters are discharged from their plants. The installation of additional treatment equipment would not be necessary for such plants as a result of this regulation. Many of the remaining plants already have wastewater treatment equipment in place equivalent to BPT and BAT technology. Thus, the availability of land for the installation of treatment equipment is not a serious concern for the vast majority (>95 percent) of the plants in the metal molding and casting category.

Table III-1

PENTON FOUNDRY CENSUS INFORMATION

	Less Than 10 Employees	10-49 Employees	50-249 Employees	Greater Than 250 Employees
Ductile Iron	28	127	283	98
Gray Iron	149	489	579	156
Malleable Iron	11	20	42	37
Steel	45	177	337	97
Aluminum	843	1,016	450	75
Brass and Bronze (Copper Alloy)	533	714	277	37
Magnesium	30	50	42	8
Zinc	225	289	175	39
Other Metals	150	158	59	9

Table III-2

FOUNDRY SHIPMENTS IN THE UNITED STATES

Year	Amount Shipped (Thousands of Tons)								Total Amount Shipped (Thousands of Tons)
	Gray Iron	Ductile Iron	Malleable Iron	Steel	Aluminum	Copper	Magnesium	Zinc	
1966					827	523	22	515	--
1967	13,466	863	1,131	1,857	744	427	21	443	18,952
1968	14,097	1,033	1,007	1,730	807	439	21	466	19,600
1969	14,697	1,254	1,172	1,897	865	481	22	488	20,876
1970	12,338	1,607	852	1,724	771	440	18	398	18,148
1971	11,728	2,111	884	1,583	808	420	27	425	17,986
1972	13,494	1,835	960	1,609	958	460	25	469	19,810
1973	14,801	2,246	1,031	1,894	483	482	27	540	21,504
1974	14,459	2,202	914	2,090	929	428	29	421	21,472
1975	10,621	1,824	730	1,937	728	350	19	356	16,565
1976	11,935	2,243	846	1,803	986	341	27	434	18,615
1977	12,291	2,702	829	1,718	1,077	351	29	394	19,391
1978	12,524	2,868	816	1,862	1,143	372	25	380	19,990
1979	12,544	2,890	715	2,039	1,151	363	14	332	20,048
1980	9,399	2,400	450	1,878	845	296	13	243	15,524
1981	9,610	2,191	422	1,743	910	290	11	236	15,413
1982	6,393	1,822	284	1,017	803	228	9	203	10,759
1983	7,180	2,067	291	729	911	276	12	258	11,724
1984[a]	8,207	2,664	365	963	819	239	6	162	13,425

[a]Estimate based on data for shipments in January through November of 1984.

References: U.S. Department of Commerce, Bureau of the Census: "Current Industrial Reports: Nonferrous Castings, Summary for 1983," ME33E(83)-13; "Iron and Steel Foundries and Steel Ingot Producers, Summary for 1983," (ME33A(83)-13); "Nonferrous Castings, November 1984," (ME33E(84)-11); Iron and Steel Castings, November 1984 (M33A(84)-11).

Table III-3

DISTRIBUTION OF WET AND DRY PLANTS
METAL MOLDING AND CASTING INDUSTRY

Subcategory	Less Than 10 Employees		10-49 Employees		50-99 Employees		100-249 Employees		More Than 250 Employees		Total	
	Wet	Dry	Wet	Dry	Wet	Dry	Wet	Dry	Wet	Dry	Wet	Dry
Aluminum Casting	13	463	103	472	33	109	62	52	21	23	232	1,119
Copper Casting	27	205	52	272	29	48	15	12	10	0	133	537
Ferrous Casting	6	123	114	443	126	197	234	99	137	47	617	909
Magnesium Casting	1	5	4	6	2	2	0	0	0	3	7	16
Zinc Casting	3	83	23	93	15	26	22	12	7	3	70	217
TOTAL	50	879	296	1,286	205	382	333	175	175	76	1,059	2,798

Table III-4

PERCENTAGE OF ACTIVE "WET" OPERATIONS WITHIN EACH EMPLOYEE GROUP
METALS CASTING INDUSTRY

Subcategory	Less Than 10 Employees	10-49 Employees	59-99 Employees	100-249 Employees	More Than 250 Employees
Aluminum Casting	2.7%	17.9%	23.2%	54.4%	47.8%
Copper Casting	11.6%	16.0%	37.7%	55.6%	100%
Ferrous Casting	4.7%	20.5%	39.0%	70.3%	74.5%
Magnesium Casting	16.7%	40.0%	50%	--	0.0%
Zinc Casting	5.8%	19.8%	36.6%	64.7%	70%

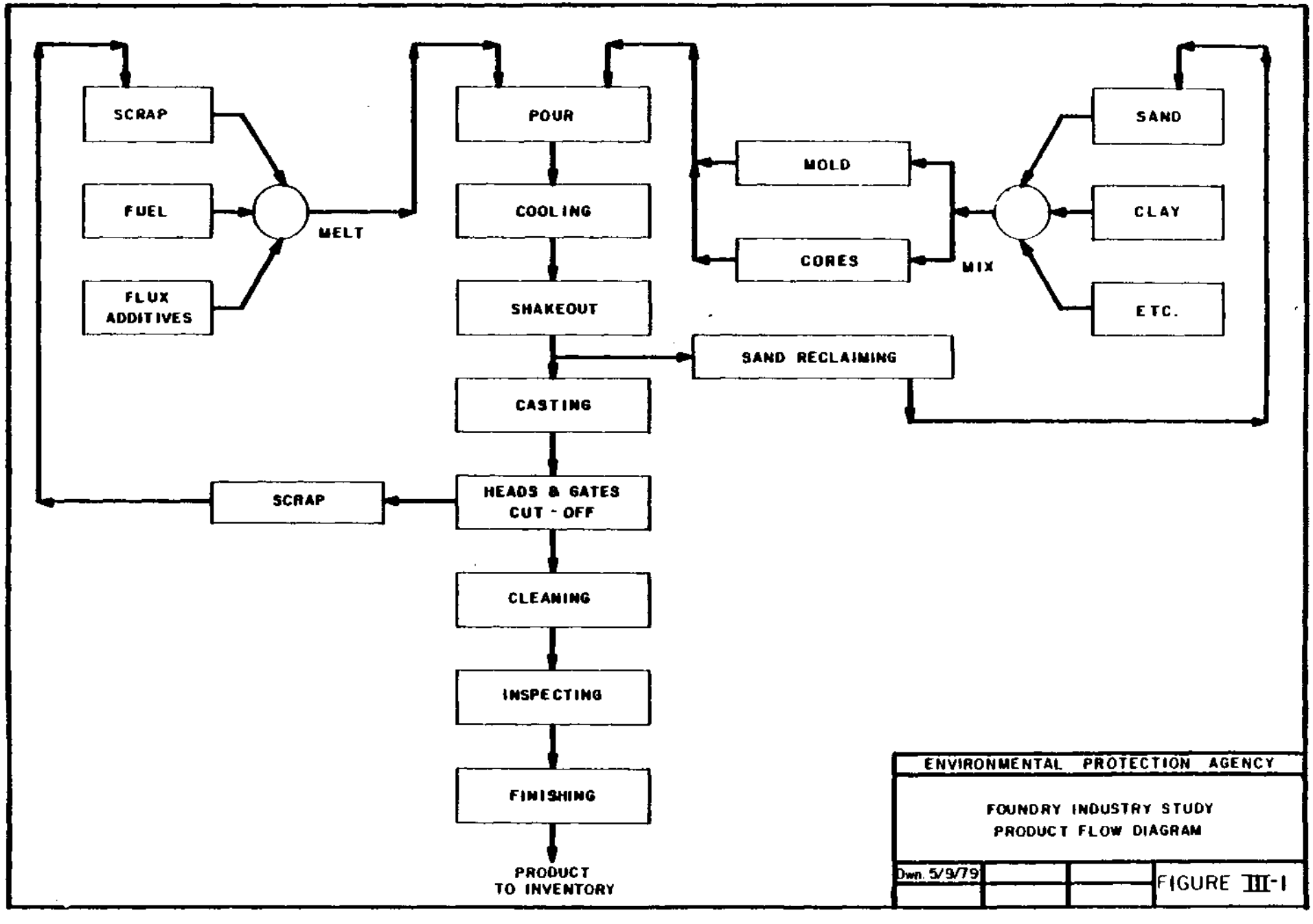
SCRAP
FUEL
FLUX ADDITIVES
MELT
POUR
COOLING
SHAKEOUT
CASTING
HEADS & GATES CUT - OFF
CLEANING
INSPECTING
FINISHING
PRODUCT TO INVENTORY
SCRAP
SAND RECLAIMING
MOLD
CORES
MIX
SAND
CLAY
ETC.
ENVIRONMENTAL PROTECTION AGENCY
FOUNDRY INDUSTRY STUDY
PRODUCT FLOW DIAGRAM
Dwn. 5/9/79
FIGURE III-1

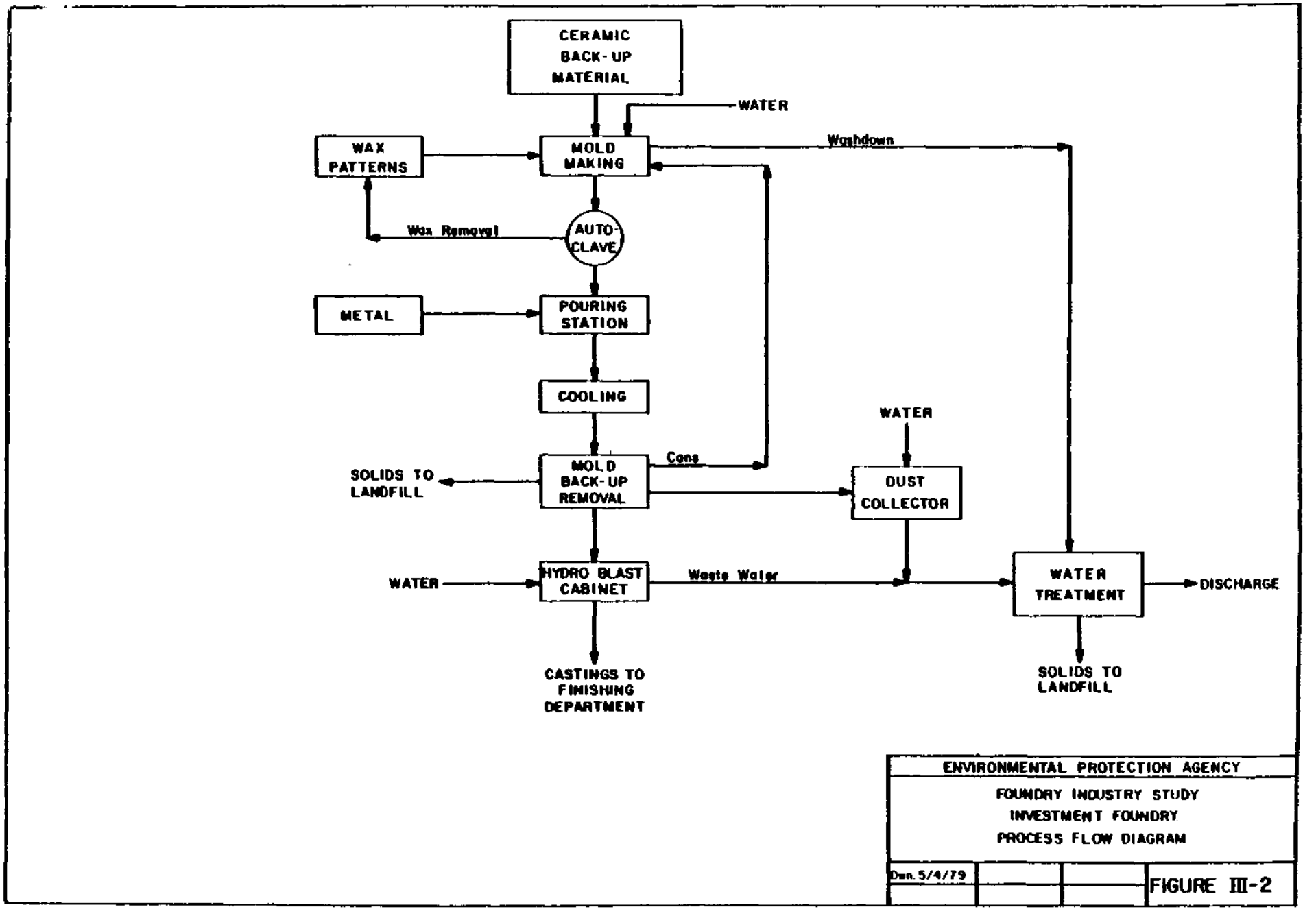

ENVIRONMENTAL PROTECTION AGENCY

FOUNDRY INDUSTRY STUDY

INVESTMENT FOUNDRY

PROCESS FLOW DIAGRAM

Dwn. 5/4/79

FIGURE III-2

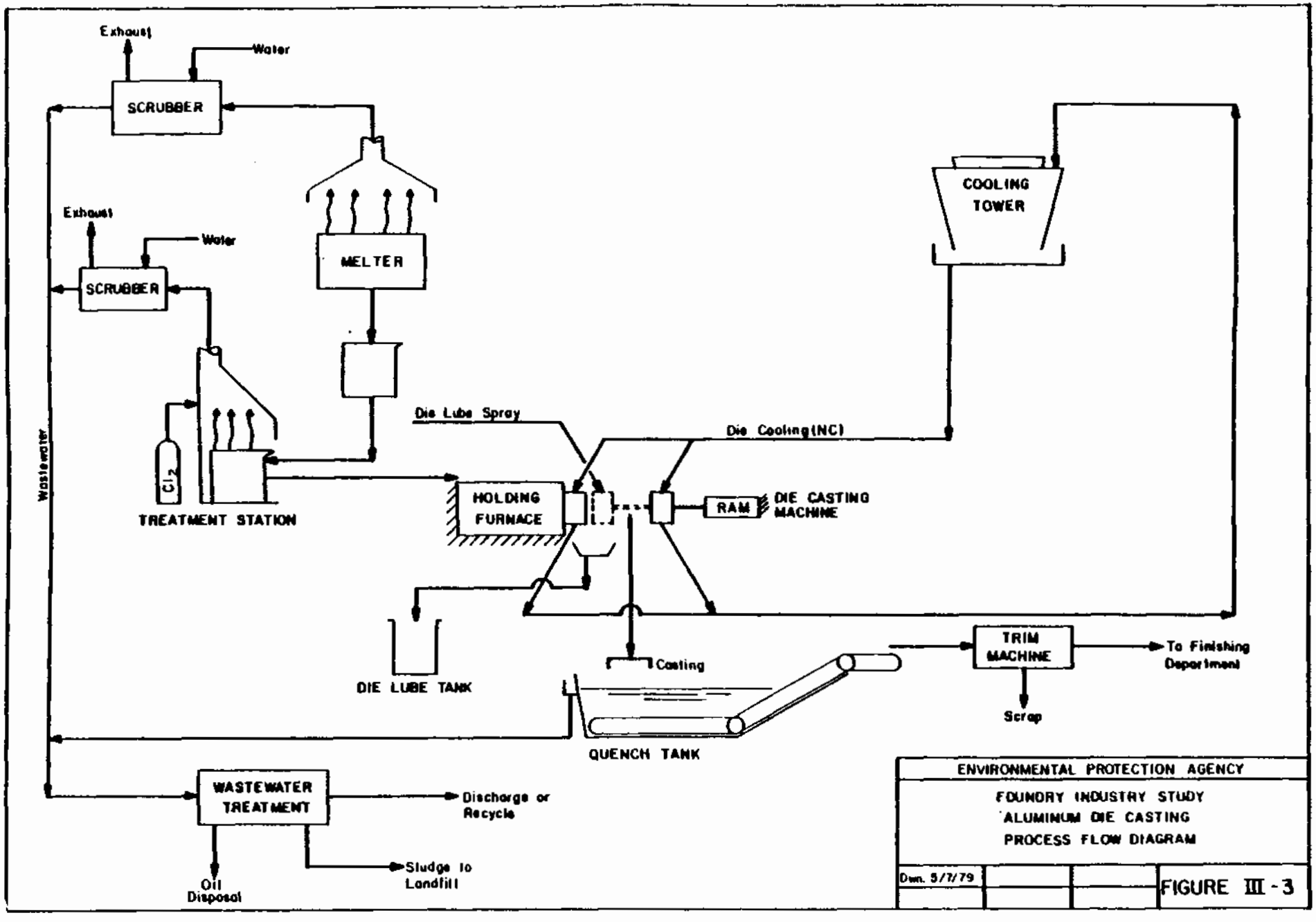
Exhaust
Water
SCRUBBER
Exhaust
Water
SCRUBBER
MELTER
COOLING TOWER
Wastewater
Die Lube Spray
Die Cooling(NC)
Cl_2
TREATMENT STATION
HOLDING FURNACE
RAM
DIE CASTING MACHINE
DIE LUBE TANK
Casting
TRIM MACHINE
To Finishing Department
Scrap
QUENCH TANK
WASTEWATER TREATMENT
Discharge or Recycle
Oil Disposal
Sludge to Landfill
ENVIRONMENTAL PROTECTION AGENCY
FOUNDRY INDUSTRY STUDY
ALUMINUM DIE CASTING
PROCESS FLOW DIAGRAM
Dwn. 5/7/79
FIGURE III-3

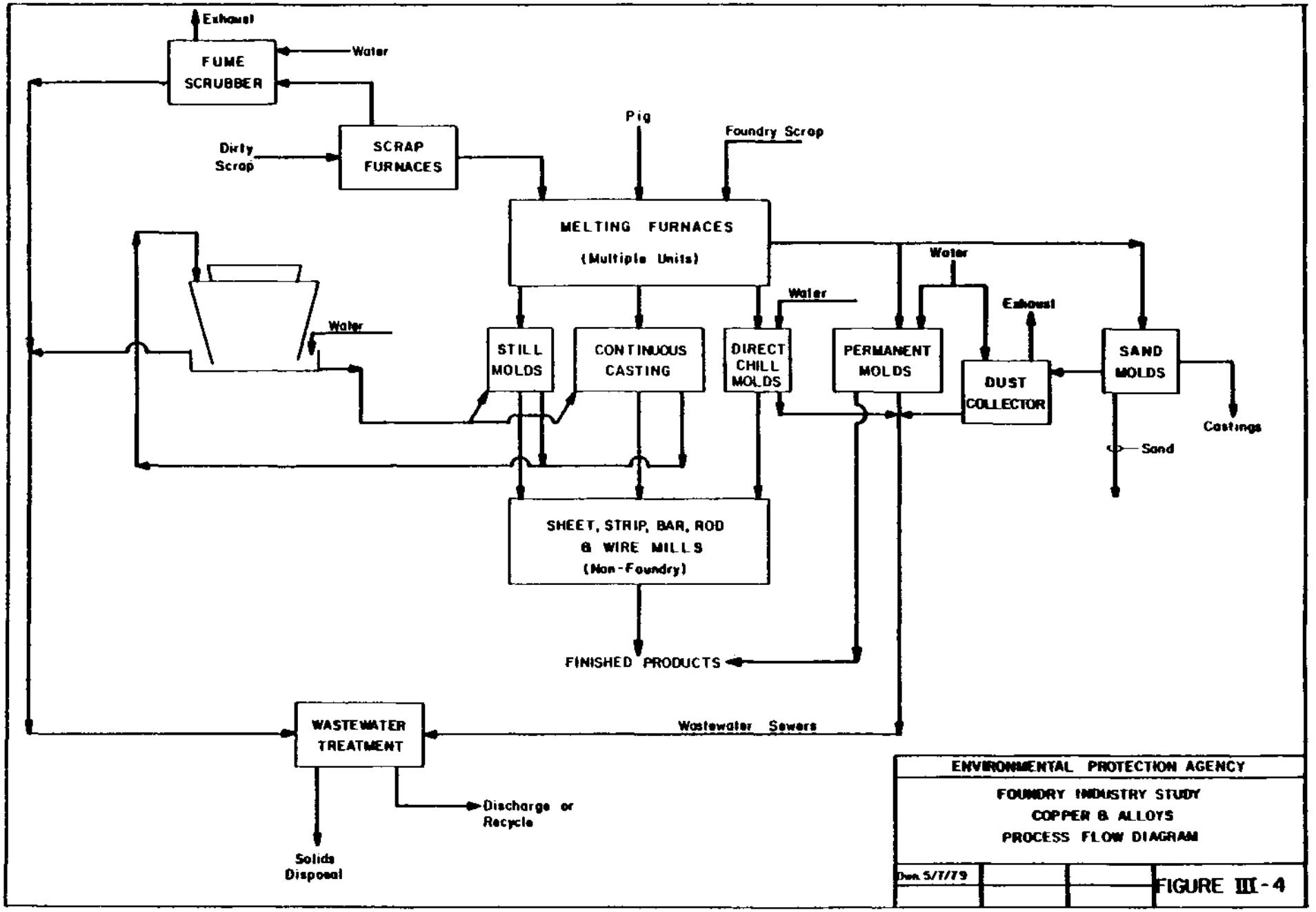
Exhaust
FUME SCRUBBER
Water
Dirty Scrap
SCRAP FURNACES
Pig
Foundry Scrap
MELTING FURNACES
(Multiple Units)
Water
Water
Exhaust
STILL MOLDS
CONTINUOUS CASTING
DIRECT CHILL MOLDS
PERMANENT MOLDS
DUST COLLECTOR
SAND MOLDS
Castings
Sand
SHEET, STRIP, BAR, ROD & WIRE MILLS
(Non-Foundry)
FINISHED PRODUCTS
WASTEWATER TREATMENT
Wastewater Sewers
Discharge or Recycle
Solids Disposal
ENVIRONMENTAL PROTECTION AGENCY
FOUNDRY INDUSTRY STUDY
COPPER & ALLOYS
PROCESS FLOW DIAGRAM
Date 5/7/79
FIGURE III-4

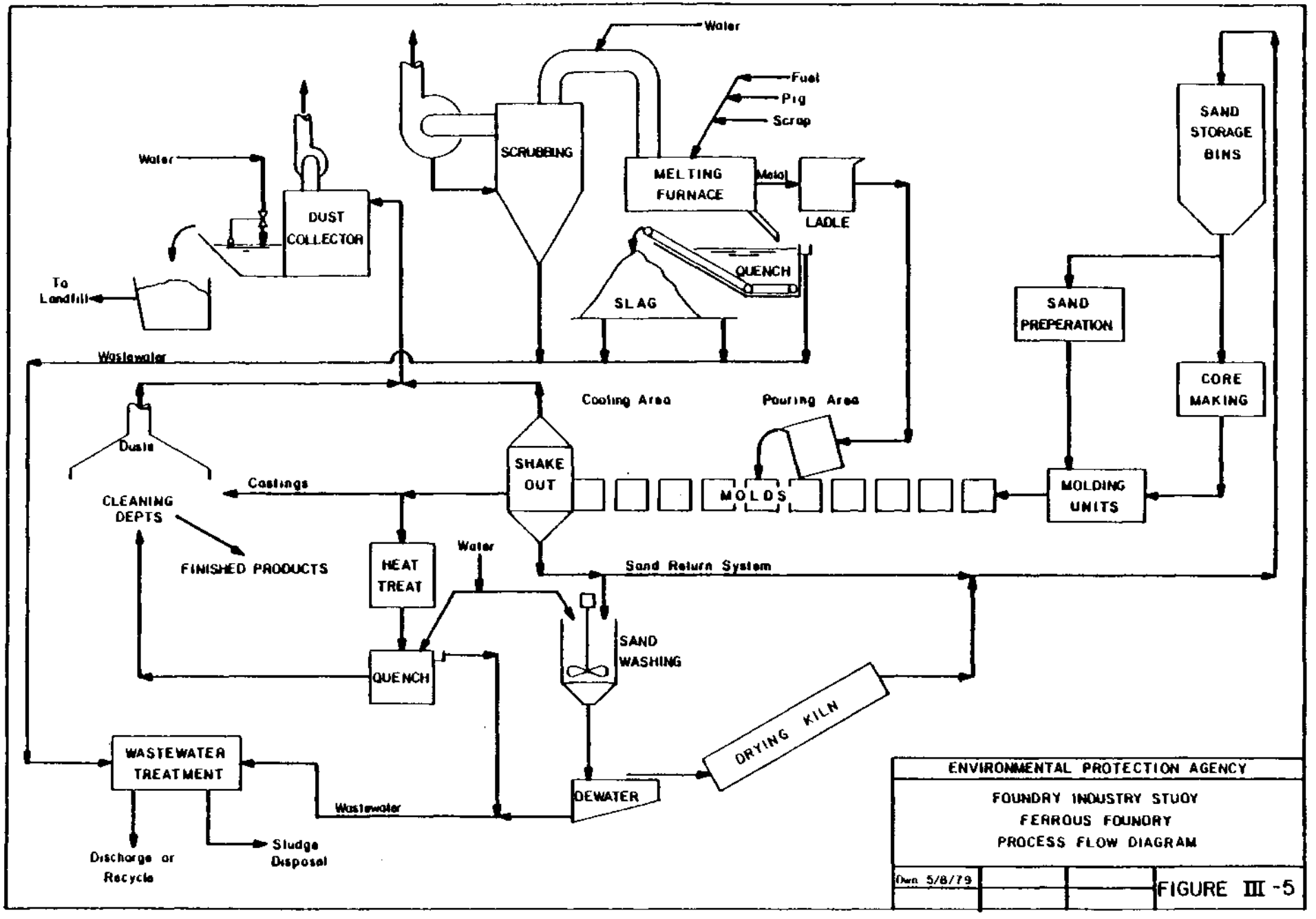
Water
Fuel
Pig
Scrap
SCRUBBING
MELTING FURNACE
Metal
LADLE
SAND STORAGE BINS
Water
DUST COLLECTOR
To Landfill
QUENCH
SLAG
SAND PREPERATION
CORE MAKING
Wastewater
Cooling Area
Pouring Area
Dusts
SHAKE OUT
MOLDS
MOLDING UNITS
Castings
CLEANING DEPTS
FINISHED PRODUCTS
HEAT TREAT
Water
Sand Return System
SAND WASHING
QUENCH
DRYING KILN
WASTEWATER TREATMENT
DEWATER
Wastewater
Discharge or Recycle
Sludge Disposal
ENVIRONMENTAL PROTECTION AGENCY
FOUNDRY INDUSTRY STUDY
FERROUS FOUNDRY
PROCESS FLOW DIAGRAM
Dwn 5/8/79
FIGURE III -5

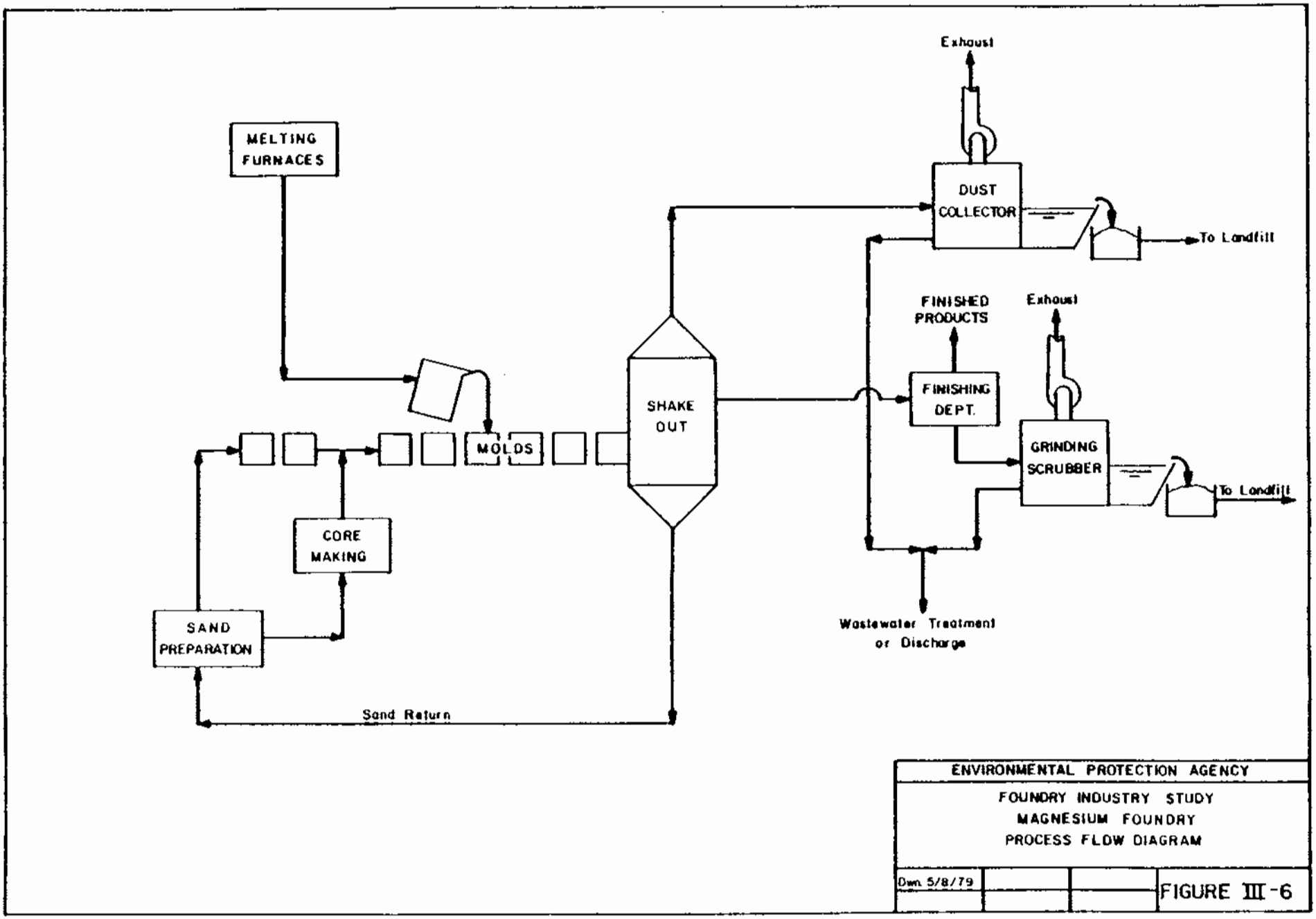

ENVIRONMENTAL PROTECTION AGENCY

FOUNDRY INDUSTRY STUDY
MAGNESIUM FOUNDRY
PROCESS FLOW DIAGRAM

Dwn. 5/8/79

FIGURE III-6

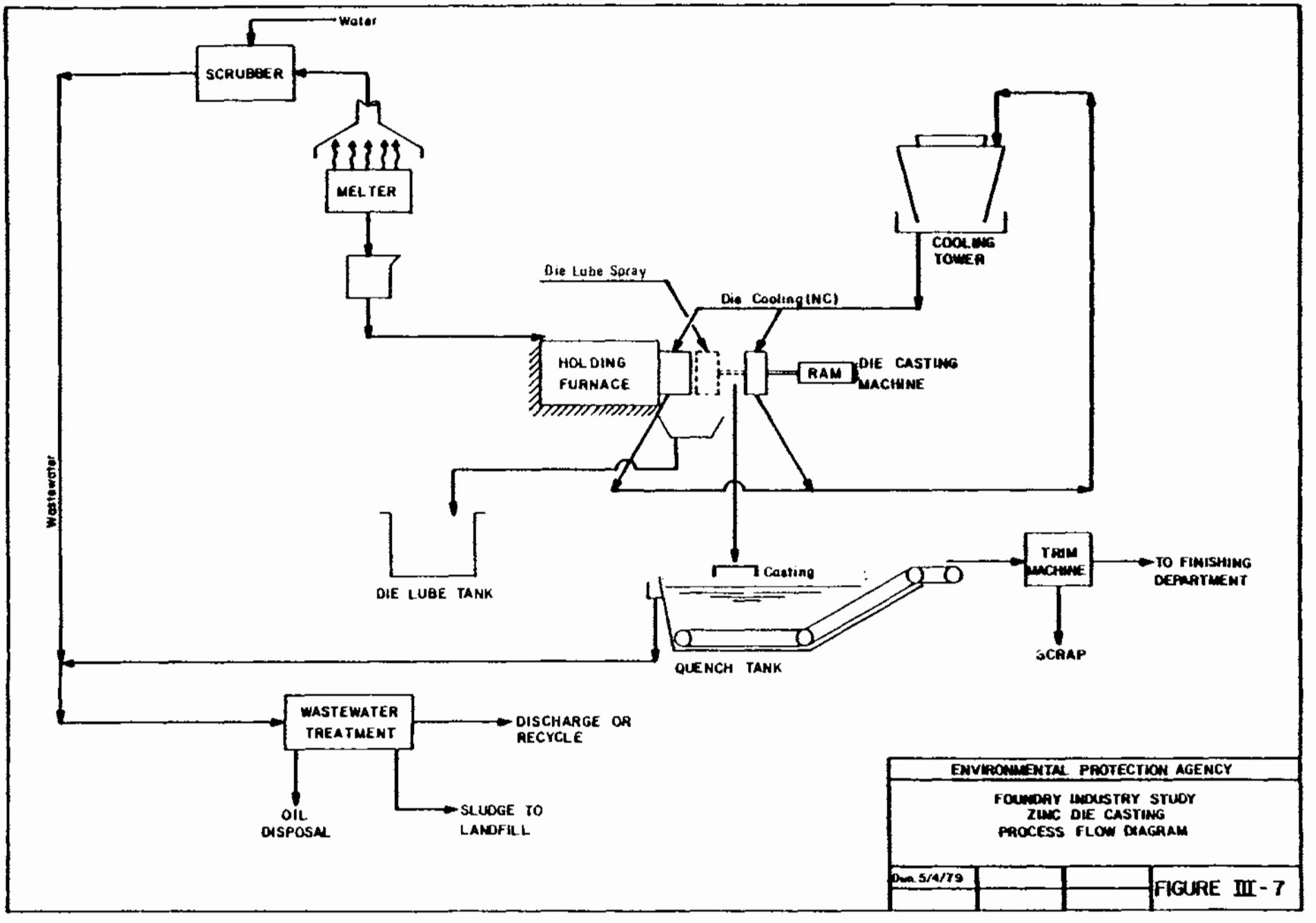
Water
SCRUBBER
MELTER
COOLING TOWER
Die Lube Spray
Die Cooling (NC)
HOLDING FURNACE
RAM
DIE CASTING MACHINE
Wastewater
DIE LUBE TANK
Casting
TRIM MACHINE
TO FINISHING DEPARTMENT
SCRAP
QUENCH TANK
WASTEWATER TREATMENT
DISCHARGE OR RECYCLE
OIL DISPOSAL
SLUDGE TO LANDFILL
ENVIRONMENTAL PROTECTION AGENCY
FOUNDRY INDUSTRY STUDY
ZINC DIE CASTING
PROCESS FLOW DIAGRAM
Date 5/4/79
FIGURE III-7

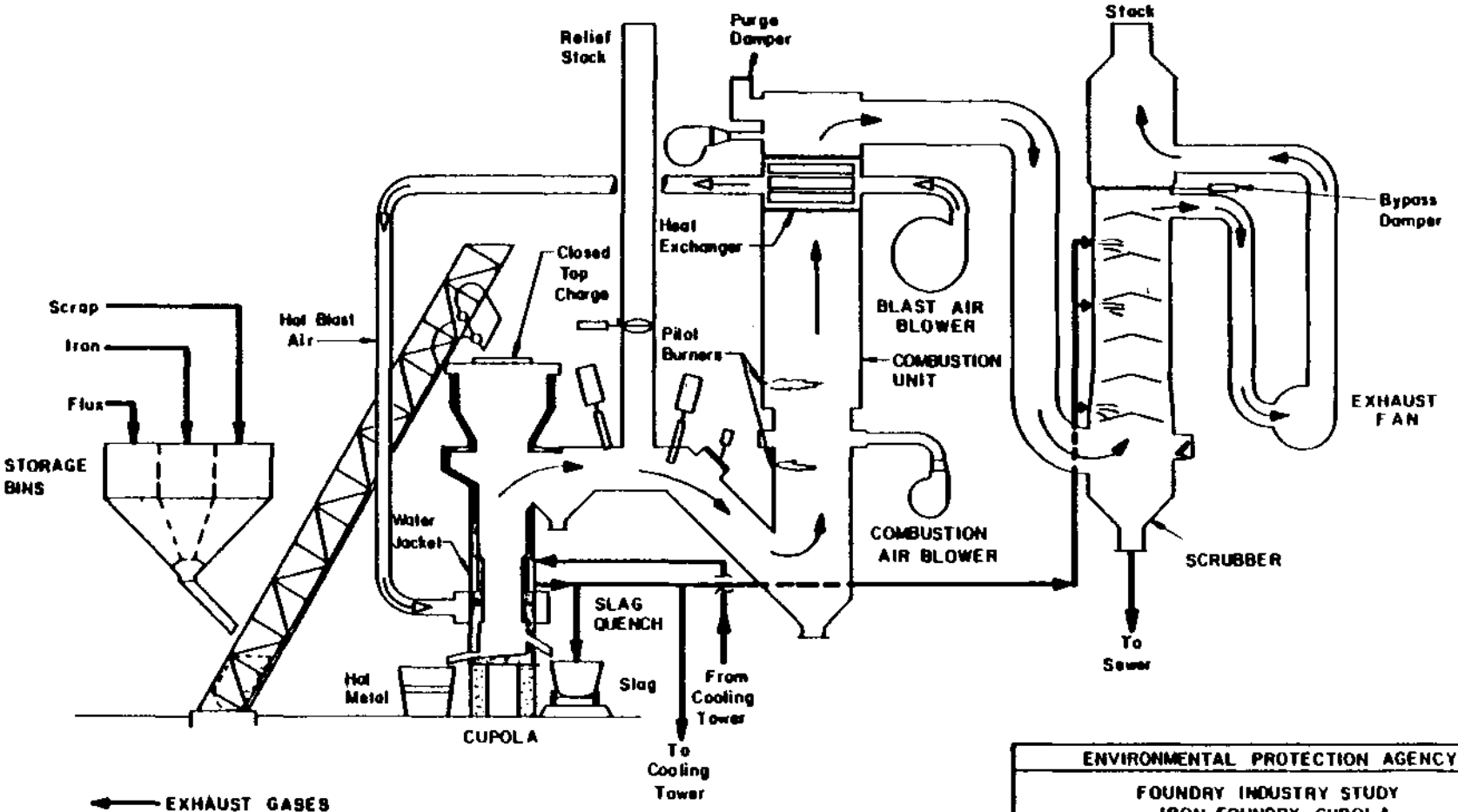

ENVIRONMENTAL PROTECTION AGENCY			
FOUNDRY INDUSTRY STUDY IRON FOUNDRY CUPOLA TYPE III PROCESS FLOW DIAGRAM			
Dwn. 5/25/79			FIGURE III-8

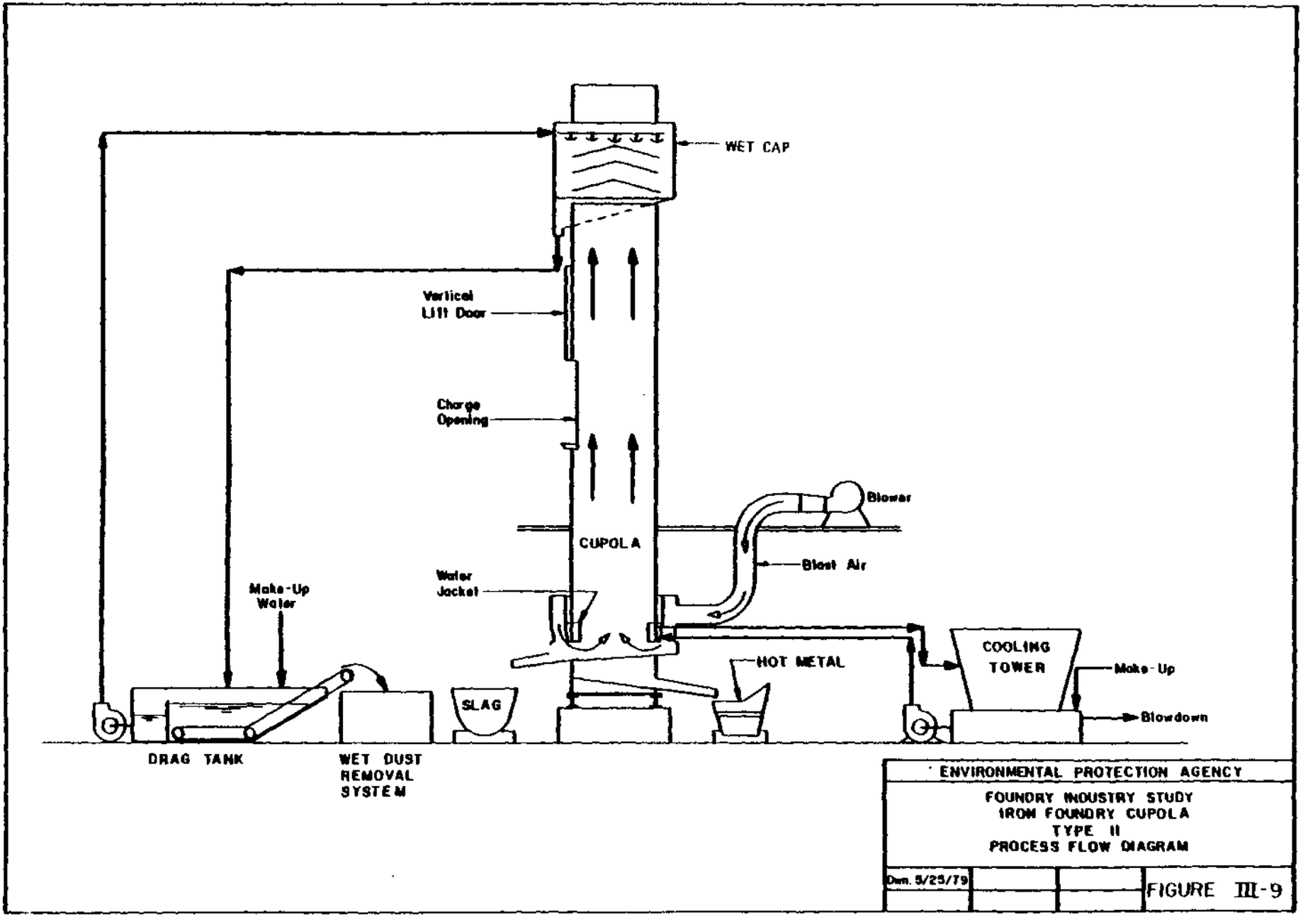
WET CAP
Vertical Lift Door
Charge Opening
Blower
CUPOLA
Blast Air
Water Jacket
Make-Up Water
HOT METAL
COOLING TOWER
Make-Up
Blowdown
SLAG
DRAG TANK
WET DUST REMOVAL SYSTEM
ENVIRONMENTAL PROTECTION AGENCY
FOUNDRY INDUSTRY STUDY
IRON FOUNDRY CUPOLA
TYPE II
PROCESS FLOW DIAGRAM
Dwn. 5/25/79
FIGURE III-9

Section IV

INDUSTRY SUBCATEGORIZATION

INTRODUCTION

The metal molding and casting (foundry) point source category includes a large number of plants which use a variety of metal molding and casting techniques to cast several different metals. Foundries may employ different manufacturing processes, some of which require air pollution control devices. Both the manufacturing processes and the air pollution control devices can generate process wastewaters. There is sufficient variation in the types of metal cast and the manufacturing and air pollution control processes employed at metal molding and casting plants to warrant division of the category into subcategories for regulatory purposes. The metal molding and casting category is not amenable to a single set of effluent limitations guidelines and standards applicable to all plants in the category because of differences in water use requirements and raw waste characteristics.

This category is, however, amenable to a subcategorization scheme which provides for the grouping of metal molding and casting plants which: cast similar metals, employ similar manufacturing processes, have similar sources of air pollution control, and, as a result, have similar water use requirements and generate wastewaters with similar characteristics. An appropriate subcategorization scheme ensures that plants grouped into a subcategory are sufficiently similar to provide a basis for reasonable comparison of like plants. Such a subcategorization scheme allows for the uniform application of effluent limitations guidelines and standards to similar plants.

SELECTED SUBCATEGORIES

Based on the findings detailed in this section and supported by the discussions in Sections III, V, and VII, the metal molding and casting category has been divided into five subcategories. Each subcategory has been further divided into distinct manufacturing or air pollution control process segments that generate unique wastewater streams. The subcategories and process segments established for the development of effluent limitations guidelines and standards of performance are:

METAL MOLDING AND CASTING CATEGORY

A. Aluminum Casting Subcategory

1. Casting Cleaning
2. Casting Quench
3. Die Casting
4. Dust Collection Scrubber
5. Grinding Scrubber
6. Investment Casting
7. Melting Furnace Scrubber
8. Mold Cooling

B. Copper Casting Subcategory

1. Casting Quench
2. Direct Chill Casting
3. Dust Collection Scrubber
4. Grinding Scrubber
5. Investment Casting
6. Melting Furnace Scrubber
7. Mold Cooling

C. Ferrous Casting Subcategory

1. Casting Cleaning
2. Casting Quench
3. Dust Collection Scrubber
4. Grinding Scrubber
5. Investment Casting
6. Melting Furnace Scrubber
7. Mold Cooling
8. Slag Quench
9. Wet Sand Reclamation

D. Magnesium Casting Subcategory

1. Casting Quench
2. Dust Collection Scrubber
3. Grinding Scrubber

E. Zinc Casting Subcategory

1. Casting Quench
2. Die Casting
3. Melting Furnace Scrubber
4. Mold Cooling

The above subcategorization scheme differs somewhat from the scheme developed for the proposed rule. The revised scheme is identical to the one described in the Federal Register notice dated February 15, 1985 (50 FR 6572).

At proposal, a lead casting subcategory was considered. However, as detailed in the March 20, 1984 Notice of Availability (49 FR

10280), the lead casting subcategory was transferred for consideration in connection with the battery manufacturing regulation because all of the data available to the Agency on lead casting concerns those operations and practices employed in battery manufacturing.

All other changes in the subcategorization scheme involve revisions to the segments listed under each subcategory. As discussed in the March 1984 Notice of Availability (49 FR 10280), the Agency received comments which asserted that some operations, which are normally a part of metal molding and casting operations, were not covered by the proposed regulations. In response to these comments, and to provide regulations covering those process wastewater sources typically found at metal molding and casting plants, the Agency identified additional processes not covered in the proposed subcategorization scheme which are found at many metal molding and casting facilities. Changes in the process segments under each subcategory are detailed below.

Aluminum Casting Subcategory - Die lube operations were combined with die casting operations because those integrated operations cannot be meaningfully separated. Four new process segments were identified and added: (1) dust collection scrubber, (2) mold cooling, (3) grinding scrubber, and (4) casting cleaning.

Copper Casting Subcategory - The mold cooling and casting quench process segment was divided into separate parts -- the mold cooling process segment and the casting quench process segment. Four new process segments were identified and added: (1) direct chill casting, (2) investment casting, (3) grinding scrubber, and (4) melting furnace scrubber.

Ferrous Casting Subcategory - The mold cooling and casting quench process segment was divided into separate parts -- the mold cooling process segment and the casting quench process segment. Three additional ferrous casting segments were identified and added: (1) investment casting, (2) casting cleaning, and (3) grinding scrubber. In addition, the process segment originally designated as sand washing has been redesignated as wet sand reclamation, to represent more accurately the wastewater sources covered by that segment.

Magnesium Casting Subcategory - One additional process segment was identified and added: (1) casting quench.

Zinc Casting Subcategory - The die casting and casting quench process segment were divided into separate parts -- the die casting process segment and the casting quench process segment. One additional process segment was identified and added: (1) mold cooling.

The Agency reviewed available data for process water sources not previously identified in the proposed regulation. Several processes not listed above are employed in the metal molding and casting industry; however, their use is not sufficiently

widespread to allow the Agency to characterize properly these miscellaneous wastestreams. Thus, EPA is unable to establish nationally-applicable effluent limitations guidelines and standards for process segments other than those listed above. Permit writers and municipal authorities will use their best professional judgement in establishing technology-based effluent limitations and standards for those miscellaneous streams not covered by the final metal molding and casting industry regulations.

SUBCATEGORY AND PROCESS SEGMENT DEFINITIONS

Metal molding and casting is defined as the remelting of a metal or metal alloy to form an intermediate or final cast product by pouring or forcing the molten metal into a mold. The casting of ingots, pigs, or other cast shapes following primary metal smelting is not included in the metal molding and casting category; it is regulated by the nonferrous metals manufacturing guidelines (40 CFR Part 421). The casting of aluminum or zinc performed as an integral part of aluminum or zinc forming, and conducted on-site at an aluminum or zinc forming plant, is covered by the respective metal forming regulation (40 CFR Part 467 for Aluminum, Part 471 for Zinc). The metal molding and casting category includes the aluminum, copper, ferrous, magnesium, and zinc casting subcategories. A production process is considered to be in a particular metal subcategory if the molten metal contains, on average, greater than 50 percent by weight of that metal, or if the metal comprises the greatest percentage of the metal, measured by weight. The casting of copper-beryllium alloys where beryllium is present at 0.1 or greater percent by weight and the casting of copper-precious metal alloys in which the precious metal is present at 30 or greater, percent by weight are excluded from regulation in the metal molding and casting category. In the following sections, the sources of process wastewaters regulated under each manufacturing process segment are defined. The process segments themselves have been described in Section III of this document.

Aluminum Casting Subcategory

1. Casting Cleaning Wastewater - Wastewater that originates from the application of water to a cast product (casting) to rid it of impurities such as die lubricants or sand. Casting cleaning wastewater does not include wastewater that originates from the rinsing of castings produced by investment casting processes; that wastewater is regulated under investment casting.

2. Casting Quench Wastewater - Wastewater that originates from the immersion of a hot casting in a water bath to cool the casting rapidly, or to change the metallurgical properties of the casting.

3. Die Casting Wastewater - Die casting wastewater includes two types of wastewater discharges: leakage of hydraulic fluid from hydraulic systems associated with die casting operations, and the discharge of die lubricants. Any process water used for the cooling of dies or castings still contained in dies is not considered die casting wastewater; rather, it is mold cooling wastewater.

4. Dust Collection Scrubber Wastewater - Wastewater that originates from the removal of dust from air in a scrubber, when water or process wastewater is used as a cleaning medium. The dust may originate with sand preparation, sand molding, core making, sand handling and transfer, the removal of sand from the casting (including "shake-out," shot-blasting, and sand blasting), or other foundry floor dust sources. Wastewater that originates from pouring floor, pouring ladle, and transfer ladle fume scrubbing also is included when these fumes are collected in an air duct system common with sand dusts. Wastewater that originates from dust collection scrubbers associated with investment casting operations are regulated under the investment casting process segment.

5. Grinding Scrubber Wastewater - Wastewater that originates from the removal of grinding dust from air in a scrubber, when water or process wastewater is used as a cleaning medium. Grinding dust is generated during the mechanical abrading, or preliminary grinding of castings following removal from the mold.

6. Investment Casting Wastewater - Wastewater generated during investment mold backup, hydroblast cleaning of investment castings, and the collection of dust resulting from the hydroblasting of castings and the handling of the investment material. Operations generating investment casting wastewaters are sometimes called lost wax, lost pattern, hot investment, or precision casting processes.

7. Melting Furnace Scrubber Wastewater - Wastewater generated during the removal of dust and fumes from furnace exhaust gases in a scrubber, when water or process wastewater is used as a cleaning medium. The dust and fumes are generated by melting or holding furnace operations and are expelled in the exhaust gases from these operations. Wastewater from pouring floor, pouring ladle, and transfer ladle fume scrubbing also is included when the fumes from those operations are collected in an air duct system common with the melting or holding furnace fumes.

8. Mold Cooling Wastewater - Wastewater that originates from the direct spray cooling of a mold or die, or of the casting, in an open mold. Water that circulates in a noncontact cooling water system in the interior of a mold is not considered mold cooling process wastewater unless it leaks from the system and is commingled with other process

wastewaters.

Copper Casting Subcategory

1. Casting Quench Wastewater - Wastewater that originates from the immersion of a hot casting in a water bath to cool the casting rapidly, or to change the metallurgical properties of the casting.

2. Direct Chill Casting Wastewater - Contact cooling water used during the direct chill casting operations. The cooling water may be sprayed directly onto the hot casting, or it may be present as a contact cooling water bath into which the cast product is lowered as it is cast.

3. Dust Collection Scrubber Wastewater - Wastewater that originates from the removal of dust from air in a scrubber, when water or process wastewater is used as a cleaning medium. The dust may originate with sand preparation, sand molding, core making, sand handling and transfer, the removal of sand from the casting (including "shake-out," shot-blasting, and sand blasting), or other foundry floor dust sources. Wastewater that originates from pouring floor, pouring ladle, and transfer ladle fume scrubbing also is included when these fumes are collected in an air duct system common with sand dusts. Wastewater that originates from dust collection scrubbers associated with investment casting operations are regulated under the investment casting process segment.

4. Grinding Scrubber Wastewater - Wastewater that originates from the removal of grinding dust from air in a scrubber, when water or process wastewater is used as a cleaning medium. Grinding dust is generated during the mechanical abrading, or preliminary grinding of castings following removal from the mold.

5. Investment Casting Wastewater - Wastewater generated during investment mold backup, hydroblast cleaning of investment castings, and the collection of dust resulting from the hydroblasting of castings and the handling of the investment material. Operations generating investment casting wastewaters are sometimes called lost wax, lost pattern, hot investment, or precision casting processes.

6. Melting Furnace Scrubber Wastewater - Wastewater generated during the removal of dust and fumes from furnace exhaust gases in a scrubber, when water or process wastewater is used as a cleaning medium. The dust and fumes are generated by melting or holding furnace operations and are expelled in the exhaust gases from these operations. Wastewater from pouring floor, pouring ladle, and transfer ladle fume scrubbing also is included when the fumes from those operations are collected in an air duct system common with the melting or holding furnace fumes.

7. Mold Cooling Wastewater - Wastewater that originates from the direct spray cooling of a mold or die, or of the casting, in an open mold. Water that circulates in a noncontact cooling water system in the interior of a mold is not considered mold cooling process wastewater unless it leaks from the system and is commingled with other process wastewaters.

Ferrous Casting Subcategory

1. Casting Cleaning Wastewater - Wastewater that originates from the application of water to a cast product (casting) to rid it of impurities such as die lubricants or sand. Casting cleaning wastewater does not include wastewater that originates from the rinsing of castings produced by investment casting processes; that wastewater is regulated under investment casting.

2. Casting Quench Wastewater - Wastewater that originates from the immersion of a hot casting in a water bath to cool the casting rapidly, or to change the metallurgical properties of the casting.

3. Dust Collection Scrubber Wastewater - Wastewater that originates from the removal of dust from air in a scrubber, when water or process wastewater is used as a cleaning medium. The dust may originate with sand preparation, sand molding, core making, sand handling and transfer, the removal of sand from the casting (including "shake-out," shot-blasting, and sand blasting), or other foundry floor dust sources. Wastewater that originates from pouring floor, pouring ladle, and transfer ladle fume scrubbing also is included when these fumes are collected in an air duct system common with sand dusts. Wastewater that originates from dust collection scrubbers associated with investment casting operations are regulated under the investment casting process segment.

4. Grinding Scrubber Wastewater - Wastewater that originates from the removal of grinding dust from air in a scrubber, when water or process wastewater is used as a cleaning medium. Grinding dust is generated during the mechanical abrading, or preliminary grinding of castings following removal from the mold.

5. Investment Casting Wastewater - Wastewater generated during investment mold backup, hydroblast cleaning of investment castings, and the collection of dust resulting from the hydroblasting of castings and the handling of the investment material. Operations generating investment casting wastewaters are sometimes called lost wax, lost pattern, hot investment, or precision casting processes.

6. Melting Furnace Scrubber Wastewater - Wastewater generated during the removal of dust and fumes from furnace exhaust gases in a scrubber, when water or process wastewater is used as a cleaning medium. The dust and fumes are generated by melting or holding furnace operations and are expelled in the exhaust gases from these operations. Wastewater from pouring floor, pouring ladle, and transfer ladle fume scrubbing also is included when the fumes from those operations are collected in an air duct system common with the melting or holding furnace fumes.

7. Mold Cooling Wastewater - Wastewater that originates from the direct spray cooling of a mold or die, or of the casting, in an open mold. Water that circulates in a noncontact cooling water system in the interior of a mold is not considered mold cooling process wastewater unless it leaks from the system and is commingled with other process wastewaters.

8. Slag Quench Wastewater - Wastewater that originates from the cooling or sluicing of furnace slag with water or process water.

9. Wet Sand Reclamation Wastewater - Wastewater that originates from the reclamation of spent sand for reuse by washing it with water.

Magnesium Casting Subcategory

1. Casting Quench Wastewater - Wastewater that originates from the immersion of a hot casting in a water bath to cool the casting rapidly, or to change the metallurgical properties of the casting.

2. Dust Collection Scrubber Wastewater - Wastewater that originates from the removal of dust from air in a scrubber, when water or process wastewater is used as a cleaning medium. The dust may originate with sand preparation, sand molding, core making, sand handling and transfer, the removal of sand from the casting, and other foundry floor dust sources. Wastewater that originates from pouring floor, pouring ladle, or transfer ladle fume scrubbing also is included when these fumes are collected in an air duct system common with sand dusts.

3. Grinding Scrubber Wastewater - Wastewater that originates from the removal of grinding dust from air in a scrubber, when water or process wastewater is used as a cleaning medium. In the magnesium casting subcategory, these scrubbers serve both air pollution control and fire retardant purposes. Magnesium dust is generated during the mechanical abrading, or preliminary grinding of the casting following its removal from the mold.

Zinc Casting Subcategory

1. Casting Quench Wastewater - Wastewater that originates from the immersion of a hot casting in a water bath to cool the casting rapidly, or to change the metallurgical properties of the casting.

2. Die Casting Wastewater - Die casting includes two types of wastewater discharges: leakage of hydraulic fluid from hydraulic systems associated with die casting operations, and the discharge of die lubricants. Any process water used for the cooling of dies or castings still contained in dies is not considered die casting wastewater; rather, it is mold cooling wastewater.

3. Melting Furnace Scrubber Wastewater - Wastewater generated during the removal of dust and fumes from furnace exhaust gases in a scrubber, when water or process wastewater is used as a cleaning medium. The dust and fumes are generated by melting or holding furnace operations and are expelled in the exhaust gases from these operations. Wastewater from pouring floor, pouring ladle, and transfer ladle fume scrubbing also is included when the fumes from those operations are collected in an air duct system common with the melting or holding furnace fumes.

4. Mold Cooling Wastewater - Wastewater that originates from the direct spray cooling of a mold or die, or of the casting, in an open mold. Water that circulates in a noncontact cooling water system in the interior of a mold is not considered mold cooling process wastewater unless it leaks from the system and is commingled with other process wastewaters.

SUBCATEGORIZATION BASIS

In identifying the subcategories and subcategory process segments for the metal molding and casting point source category, the following factors were considered:

1. Type of metal cast
2. Manufacturing process and water use
3. Air pollution sources
4. Pollutant concentrations in raw wastewater
5. Raw materials
6. Process chemicals
7. Plant size
8. Plant age
9. Geographic location
10. Central treatment
11. Make-up water quality

The type of metal cast and the manufacturing process form the basic framework for the selected subcategories and subcategory segments. Many of the other factors provided additional support

for the subcategorization scheme. These other factors, including process wastewater characteristics, helped to delineate the final subcategories as reflected in the subcategories and subcategory segments developed.

Rationale for Subcategorization - Factors Considered

In the following sections, each of the factors listed above is evaluated on the basis of suitability for subcategorizing the metal molding and casting category.

Type of Metal Cast

The type of metal cast forms the primary basis for subcategorization of the metal molding and casting category. The wastewater sampling performed as a part of this regulatory development effort showed that the type of metal cast in a process does affect the type and quantities of toxic metal and toxic organic pollutants present in the wastewater from that process. One reason for this observation is simply the difference in the raw material used in the metal charge. Metals and other pollutants that are present in the furnace charge will eventually enter the process water and will influence the process wastewater characteristics.

In addition, metals differ in physical and chemical properties such as melting point and malleability, and these inherent differences in raw material influence in turn the manufacturing process employed and the process chemicals chosen. Process wastewater characteristics are largely determined by such factors as these.

The metallurgical properties of the metal being cast influence which manufacturing processes may be used during manufacture of the desired product. For example, zinc and aluminum castngs are frequently produced by die casting techniques, while ferrous castings are not. Results of metal molding and casting surveys indicate that slag quenching is associated only with ferrous casting.

The different types of metal cast require the use of different process chemicals. For example, aluminum and zinc are more amenable to die casting techniques, while ferrous castings are more often produced in sand molds. The binders and chemical additives used in sand casting are substantially different from the process chemicals used as mold release agents in die casting. As a result, the wastewaters generated in the aluminum and zinc subcategories will contain different types and quantities of toxic organic pollutants from those found in wastewaters generated in the ferrous subcategory. Subcategorization of the metal molding and casting industry by metal type accounts for these differences.

In those instances where a plant casts more than one metal, the manufacturing processes, equipment, and pollutant sources are

usually segregated by metal type. A specific melting furnace, for example, melts only one metal to avoid cross contamination with another metal. Manufacturing processes are generally designed to handle only one metal type. Many of these manufacturing processes (die casting for example) require the use of special process chemicals designed for very specific applications. These circumstances provide further support for the subcategorization of foundries by metal type.

Examination of the analytical data indicated that differences in alloys of the same base metal were not of sufficient magnitude to subcategorize by alloy. This is most apparent in the ferrous casting subcategory, where variations in raw waste characteristics, manufacturing processes, and process chemicals among gray iron, malleable iron, ductile iron, and steel foundries were not significant enough to support subcategorization by alloy.

Manufacturing Process and Water Use

Wastewater characteristics are determined by two factors: process water usage rates and exposure of process water to sources of contamination. Both of these factors are dependent on the manufacturing process employed. Water usage is highly dependent on the cooling, cleaning, or air scrubbing requirements of a particular process application. Similarly, the types and amounts of pollutants present in water discharged from a process are influenced by that process. For example, suspended solids and metals loadings are much higher in scrubber wastewaters than in a mold cooling wastewater discharge; for a scrubber application, the process water is being purposely applied to collect a particulate pollutant load. Oil and grease and organic priority pollutant loadings are much higher in die casting wastewaters than in casting quench wastewaters. A major portion of the die casting wastewater discharge is water used as a carrier solution for oily die casting lubricants.

Finally, many manufacturing processes are unique to the type of metal cast. For example, results of metal molding and casting industry surveys indicate that slag quenching is associated only with ferrous casting. Casting techniques also differ: for example, aluminum and zinc castings are frequently produced by die casting methods, while ferrous castings are not.

It is clear from the above examples that a subcategorization scheme based solely on metal type will not adequately account for differences in wastewater characteristics and wastewater flow rates. To account for the differences in water use and wastewater characteristics among the different processes, the subcategories developed on the basis of metal type were further divided into manufacturing process segments.

A review of each of the remaining factors on the list reveals that the type of metal cast and the manufacturing process employed largely determine the sources of air pollution, process wastewater characteristics, and raw materials and process

chemicals used. Thus, subcategorization by metal type and manufacturing process inherently considers those factors.

Air Pollution Sources

Certain manufacturing processes are characteristic sources of air pollution. Where required, air pollution control devices have been installed to control air emissions from various manufacturing processes. The design of these devices may be either of the "dry" or "wet" type. An example of a "dry" type control device is a baghouse; such dry devices are discussed in Section III. "Wet" air pollution control devices are referred to as scrubbers, and these devices may result in the discharge of process wastewaters. Where scrubbers are present in the metal molding and casting industry, they have been included in the subcategorization scheme as separate process segments.

Pollutant Concentrations in Process Wastewater

As discussed in the previous sections, wastewater characteristics may vary with both the type of metal cast and on the manufacturing process employed. Thus, process wastewater characteristics were inherently considered in the decision to subcategorize by metal type and to divide the subcategories further by process segment.

Raw Materials

In the metal molding and casting industry, the raw material consists of the charge to the melting furnace. This charge consists primarily of the metal being cast. For example, the production of a zinc casting begins with the charge of a zinc raw material to the melting furnace. For this reason, raw material differences are considered in a subcategorization scheme based on the type of metal cast.

Process Chemicals

The major process chemicals used in the manufacture of castings fall into two general classes: those associated with sand casting, and those associated with die casting. The process chemicals associated with sand casting techniques include sand and core binders and related chemical additives. Several of these process chemicals contain toxic pollutants or chemicals which, when exposed to high metal temperatures, may decompose to toxic pollutant materials.

Analysis of plant data indicates the use of a wide variety of sand casting materials. At least 14 different chemical types of sand additives are commercially available. On-site visits to many plants indicated that more than one type of sand additive is often used simultaneously within the plant and that changes in the use of the various products occur periodically.

The process chemicals associated with die casting include die lubricants, die coatings, and quench solution additives. These materials are used to prevent castings from adhering to the die and to provide a casting with improved surface characteristics. Frequently, many different products are tried until a satisfactory lubricant or coating is found.

Because of the wide variety of process chemicals and the frequent changes in the use of these products, the type of process chemical used is not an adequate basis for subcategorization. However, since the types of process chemicals used are related to the manufacturing processes employed and type of metal cast, the difference in process chemical usage was inherently considered in the subcategorization and segmentation scheme developed.

Plant Size

Plant size can be measured by several methods: number of employees, production, or process wastewater flow. No identifiable relationship between any of these three size measurements and process wastewater characteristics was found. Additionally, process water usage requirements per pound of metal poured or per 1000 standard cubic feet of air scrubbed were found to be correlated but independent of plant size. For these reasons, plant size was not considered to provide an adequate basis for subcategorization. However, the Agency has found that the costs of installing and operating treatment systems does not vary proportionally to plant size. Economies of scale exist in that larger systems are relatively less expensive than smaller systems. For this reason, the Agency has developed model plants for each subcategory and process segment based on different employment size groups (i.e., based on number of production employees). The economic impact of compliance with limitations and standards based on various technology options was evaluated independently for each size group. This division of the subcategories for economic evaluation enabled the Agency to consider adequately any differences in the financial strength of large and small plants in the metal molding and casting category when evaluating the economic impacts of this regulation.

Plant Age

Plants within a given subcategory may have significantly different ages in terms of initial operating year. To remain competitive, however, plants must be constantly modernized.

Plants may be updated by modernizing a particular component, or by installing new components. For example, an old furnace might be equipped with oxygen lances to increase the throughput, or replaced entirely by a new, more efficient furnace. Modernization of production processes and air pollution control equipment produced analogous wastes among all plants producing a given metal, despite the original plant start-up date.

Similarly, wastewater treatment equipment is installed and modified as plants become modernized. Examination of the general plant summary tables presented in Section 22.76 of the record for this rulemaking indicates that the installation and operation of wastewater treatment, including high rate recycle systems, is not correlated with plant age. As an example, several plants which have been in operation for over 30 years have installed treatment and recycle facilities as recently as six years ago. At other plants, treatment and recycle facilities have been in use for over 35 years.

The Agency has therefore concluded that plant age does not account for any differences among plants in raw wastewater characteristics or in ability to install treatment equipment in order to achieve the regulations being promulgated. Thus plant age was not selected as an appropriate basis for subcategorization.

Geographic Location

Plants engaged in metal molding and castings are located in all of the industrial regions of the United States. None of the available data indicate that the location of a plant affects the type of metal cast, the manufacturing process employed, or other process wastewater characteristics. Therefore, geographic location is not an appropriate basis for subcategorization.

Geographic location may affect the quality of the make-up water available to a plant. Make-up water quality was considered as a basis for subcategorization and is discussed below as a separate topic.

Central Treatment

A significant portion of the plants in the metal molding and casting industry have more than one process generating process wastewater, and perform combined treatment of these wastewaters in a central treatment facility. The Agency received numerous comments which asserted that plants with central treatment would not be capable of achieving the same recycle rates as would those plants that treat wastewaters from single processes separately. The Agency also received comments which asserted that high rate recycle of wastewaters from multiple processes concentrates dissolved solids and other constituents in raw wastewaters and that this concentration of pollutants results in higher effluent concentrations from lime and settle treatment than would be expected for treatment of wastewaters from single processes. Therefore, these commenters asserted that metal molding and casting plants with central treatment should be assigned a separate subcategory.

Section VII of this Development Document contains a detailed presentation of the recycle model analysis as it pertains to central treatment. In summary, the Agency found from the analysis that achievable flow weighted recycle rates for combined

treatment systems were higher than the recycle rates predicted for single process treatment systems, rather than lower, as asserted in comments. The recycle model analysis did indicate that plants in the ferrous subcategory with central treatment of melting furnace scrubber, dust collection scrubber, and slag quench wastewaters showed marginally lower recycle rates than those predicted for the separate processes. However, increases in blowdown flow rates for these three processes were provided to account for poor make-up water quality. These increases in blowdown were sufficient to allow facilities with central treatment to achieve the separate stream recycle rates. Moreover, plants which recycle to their processes after central treatment effect greater removal of pollutants and thereby achieve sufficiently higher recycle rates, not lower as asserted in comments, such that individual process recycle rates are achieved or surpassed.

The Agency's treatment effectiveness analysis, also presented in Section VII of the Development Document, is based on data from lime and settle treatment in the metal molding and casting industry. Almost all of the data used in the treatment effectiveness analysis are for plants with high rate recycle and combined treatment of wastewaters from multiple processes in central treatment facilities. The raw wastewaters treated by these facilities are highly concentrated and are the most difficult wastewaters in this industry to treat. It follows that plants that do not practice central treatment of multiple waste streams will be able to achieve these values, as well as plants practicing central treatment. The Agency has concluded that these findings support the existing subcategorization, and that further subcategorization of the metal molding and casting industry for central treatment plants and development of separate recycle rates and treatment effectiveness concentrations are not warranted.

Make-up Water Quality

The Agency's recycle model analysis also was used to determine whether make-up water quality should serve as a basis for subcategorization. As described in detail in Section VII of this Development Document, the Agency found that only three process segments among the 19 analyzed were marginally sensitive to poor make-up water quality. All of these processes are in the ferrous subcategory -- melting furnace scrubber, dust collection scrubber, and slag quench. By allowing for increases of 1-2 percent in blowdown flow rates (decreases in recycle rates) and therefore increased removal from recycle systems of certain constituents that cause scaling or corrosion, the adjusted recycle rates were achievable even with poor make-up water quality, without expensive and sophisticated treatment. Therefore, the existing subcategorization incorporates the effects of make-up water quality, and further subcategorization is not necessary.

Summary

For regulatory purposes, the most important reasons to subcategorize are to account for differences among plants, either in the type and amounts of pollutants present in the wastewater, or in water usage rates. The primary factor likely to affect such wastewater characteristics is the type of metal cast. An additional important factor is the type of manufacturing process employed. This further influences the type and amount of pollutants in the raw waste, water use rates, and thus the appropriateness of selected treatment technologies. For these reasons, metal type was chosen to form the basis for subcategorization of the metal molding and casting point source category; the subcategories were then further segmented by process type. This subcategorization scheme implicitly considers such factors as wastewater characteristics, process chemicals used, and wastewaters generated by wet air pollution control equipment.

PRODUCTION NORMALIZING PARAMETERS

To ensure equitable regulation of the category, effluent limitations guidelines and standards have been established on a pollutant mass discharge basis (i.e., mass of pollutant discharged per unit of production activity). As discussed in later sections of this document, water conservation through high rate recycle is an important part of the model treatment technology for this category. To ensure that good water conservation practices are followed, the mass of pollutants in metal molding and casting discharges have been related to a specific unit of production to establish limitations and standards that will control the pollutant mass discharged proportionate to some level of production activity. The unit of production specified in these regulations is known as a production normalizing parameter (PNP).

Selection of Production Normalizing Parameters

Two criteria were used in selecting the appropriate PNP for a given subcategory or segment: (1) maximizing the degree of correlation between the PNP and the corresponding discharge of pollutants and (2) ensuring that the PNP is easily measured and feasible for use in establishing regulations.

At proposal, the Agency considered the following for use as production normalizing parameters: tons of sand used for dust collection scrubber operations, tons of sand washed for sand washing operations, and tons of metal poured for all other metal molding and casting operations. For the four segments for which a discharge allowance was proposed, tons of metal poured was chosen as the production normalizing parameter.

After proposal, many comments were received stating that the use of tons of sand used or metal poured as production normalizing parameters for air scrubbing operations was improper. The

commenters stated that air flow through a scrubber was a more appropriate production normalizing parameter. After consideration of these comments, the Agency performed a correlation analysis for wet scrubbers to test the correlation of water use with three parameters: tons of metal poured, tons of sand used, and air flow (in units of 1,000 standard cubic feet per minute or 1,000 SCFM).

The correlation analysis was run on three sets of data points:

- Production (tons poured per day) vs. water use (gallons per day, GPD),
- Sand use (tons used per day, TPD) vs. water use (GPD), and
- Air flow (1,000 SCFM) vs. water use (gallons per minute, GPM).

These sets of data were for individual process wastewater sources, as compiled from the data collection portfolios (DCPs). Correlation coefficients were obtained for each of these sets of data using the linear regression function based upon the least squares method of curve fitting.

Examination of the resulting correlation coefficients reveals that in nearly every case, air flow correlates much more closely to water use than either metal poured or sand used for the process segments involving wet scrubbing. A more detailed account of the correlation analyses performed and sets of input and output data can be found in Section 22.28 of the public record for this rulemaking.

After considering the comments submitted by industry and the results of the correlation analysis, the Agency decided that air flow was a more appropriate production normalizing parameter than sand used or metal poured for the three scrubber-based process segments: dust collection scrubber, grinding scrubber, and melting furnace scrubber.

Production normalizing parameters for each segment are presented in Table IV-1. The table shows that the production normalizing parameter for all processes is either tons of metal poured or thousands of standard cubic feet of air with one exception: ferrous wet sand reclamation. The production normalizing parameter for this process is tons of sand reclaimed.

Tons of metal poured was selected as the production normalizing parameter for metal molding and casting operations other than scrubber operations and sand reclamation because it is a production record commonly maintained by metal molding and casting plants, and it can be correlated to water use requirements and pollutant discharge loads for the processes for which it is used as the PNP. Tons of sand reclaimed was selected as the production normalizing parameter for the ferrous wet sand

reclamation process segment because it is a production record that is or can be easily recorded or calculated, and it can be correlated to water use requirements and pollutant discharge loads for the wet sand reclamation process segment. Air flow was selected as the PNP for wet scrubber operations for the reasons described above.

Several other parameters also were considered and rejected for use as production normalizing parameters. The rationale for eliminating each of these parameters is discussed below.

Weight of Sand

The weight of sand used in a process was originally the production normalizing parameter for two segments: the dust collection scrubber segments and ferrous wet sand reclamation segments. As previously discussed, for the dust collection segments, a correlation analysis showed that air flow through the process scrubber correlated much more closely to water use than did the weight of sand used in the process.

For the ferrous wet sand reclamation segment, the weight of sand that is actually reclaimed is more highly correlated to process water use than is the weight of sand used because process water is generated only during the reclamation of the sand. For example, some plants might use a great deal of sand in their process, but reclaim little or none of it, thus using little or no reclamation process water.

Surface Area of Casting

Surface area was considered as a possible production normalizing parameter for those manufacturing processes involving cleaning because pollutants enter the cleaning water through intimate contact with the surface of the casting. However, surface area of a casting is a variable dependent upon the shape and design of the castings being manufactured. In some plants, such as those which cast miscellaneous shapes, product surface area changes frequently and is difficult to determine. Records on product surface area are not generally kept by industry. Therefore, surface area was not selected as a production normalizing parameter.

Weight of Final Product

The weight of final product is readily available in production records, but its application as a production normalizing parameter has a significant drawback.

The weight of the casting in final product form may vary substantially from the casting's initial weight. Casting weight is at a maximum when the casting is first formed (i.e., immediately after the pouring of the molten metal into the mold). At this point, the casting has the gates, sprues, and risers attached, and the total weight of all the castings produced per unit time closely

equates with the total amount of metal poured during that unit of time.

The major reduction in weight occurs after the metal molding and casting supportive process steps (sand preparation, mold and core making, sand washing, etc.) have occurred. This weight reduction is due to the removal of the gates, sprues and risers. Weight loss can be as little as five percent or as much as 70 percent of the initial total casting weight, depending upon the type of metal cast, the casting shape, and the volume of the gates, sprues, and risers required in the mold.

Additional weight changes can occur when metal is removed during the machining of the casting or, for example, when weight is added during the electroplating or the painting of the casting.

For the reasons stated above, the weight of the final product was not found to be a suitable production normalizing parameter.

Process Chemicals Consumed

For the reasons stated in the discussion of the factors considered for subcategorization, the variability in the amount of process chemicals consumed diminishes its usefulness as an appropriate production normalizing parameter.

TABLE IV-1

PRODUCTION NORMALIZING PARAMETERS USED TO DEVELOP EFFLUENT LIMITATIONS

Process Segment	Production Normalizing Parameter
Aluminum	
Casting Cleaning	Mass of metal poured
Casting Quench	Mass of metal poured
Die Casting	Mass of metal poured
Dust Collection Scrubber	Volume of scrubber air flow
Grinding Scrubber	Volume of scrubber air flow
Investment Casting	Mass of metal poured
Melting Furnace	Volume of scrubber air flow
Mold Cooling	Mass of metal poured
Copper	
Casting Quench	Mass of metal poured
Direct Chill Casting	Mass of metal poured
Dust Collection Scrubber	Volume of scrubber air flow
Grinding Scrubber	Volume of scrubber air flow
Investment Casting	Mass of metal poured
Melting Furnace	Volume of scrubber air flow
Mold Cooling	Mass of metal poured
Ferrous	
Casting Cleaning	Mass of metal poured
Casting Quench	Mass of metal poured
Dust Collection Scrubber	Volume of scrubber air flow
Grinding Scrubber	Volume of scrubber air flow
Investment Casting	Mass of metal poured
Melting Furnace	Volume of scrubber air flow
Mold Cooling	Mass of metal poured
Slag Quench	Mass of metal poured
Wet Sand Reclamation	Mass of sand reclaimed
Magnesium	
Casting Quench	Mass of metal poured
Dust Collection Scrubber	Volume of scrubber air flow
Grinding Scrubber	Volume of scrubber air flow
Zinc	
Casting Quench	Mass of metal poured
Die Casting	Mass of metal poured
Melting Furnace	Volume of scrubber air flow
Mold Cooling	Mass of metal poured

SECTION V

WATER USE AND WASTEWATER CHARACTERISTICS

This section presents the industry survey data that characterize metal molding and casting water use and the analytical data that characterize the raw wastewater from the various metal molding and casting process segments.

DATA SOURCES

Metal Molding and Casting Industry Profile Data Base

Metal molding and casting water usage data were obtained primarily from data collection portfolios completed by metal molding and casting plants in 1977. DCP's were sent to 1,269 plants which formed a representative cross-section of the metal molding and casting industry. The information in the portfolios has been updated, and some additional information has been added through several data solicitation and verification efforts that were undertaken in response to industry comments since the DCP's were originally received. A chronological description of these survey efforts and the development of a metal molding and casting industry profile data base is discussed in Section III.

Sampling and Analysis Program

In addition to the survey efforts mentioned above, the Agency also conducted an extensive program of site visits and water sampling and analysis at metal molding and casting plants. Site visits were conducted primarily to directly observe metal molding and casting processing steps, process water usage and discharge practices, and wastewater treatment and control. The sampling and analysis program was undertaken primarily to characterize metal molding and casting wastewater and to identify pollutants of concern in the metal molding and casting category. During the sampling and analysis program, special emphasis was placed on examining and quantifying the presence of priority pollutants. In total, EPA and its contractors collected and analyzed samples from 46 metal molding and casting plants during three separate sampling efforts.

Table V-47 lists the 129 priority pollutants considered in this study. Three pollutants have subsequently been deleted from the list of priority pollutants - #17 bis(chloromethyl)ether, #49 trichlorofluoromethane, and #50 dichlorodifluoromethane. Samples were collected and analyzed for 128 priority pollutants and other pollutants deemed appropriate. Because the analytical standard for #129 2,3,7,8-tetrachlorodibenzo-p-dioxin (TCDD) was judged to be too hazardous to be made generally available, samples were never analyzed for this pollutant.

Samples collected during the sampling program included, but were not limited to, incoming (source) water, raw process wastewater, and untreated, partially treated, and fully treated wastewater.

Incoming Water Analysis. Incoming water samples were collected for each sampled plant and analyzed for various pollutants. Overall, these analyses revealed few pollutants at concentrations above the minimum quantifiable limit of the specific analytical method or at concentration levels significant enough to affect the anticipated design of a waste treatment system.

Raw Waste Analysis. The analytical data base generated through EPA's metal molding and casting sampling activities, and used to characterize raw wastewaters is summarized in Tables V-30 through V-46. These summary tables present six columns of data for each process segment where raw wastewater analytical data are available. The first column lists the pollutants detected in wastewater from the respective segment. The second and third columns present the number of samples that were analyzed for each pollutant and the number of times the pollutant was detected. The fourth column presents the range of concentrations at which the pollutant was detected. A zero as the minimum value in the concentration range indicates that the pollutant was reported as present in one or more samples at less than the detection limit. The fifth column presents the average concentration at which the pollutant was detected.

The average concentration was calculated as the arithmetic average of all available data. "Less than" values were averaged as zeros. Values reported as non-detected were not included in the average. The last column on each table presents the average normalized waste load generated per kkg of metal poured or sand reclaimed, or 1,000 m^3 air scrubbed. These averages were calculated by normalizing each sampling data point to the production or air flow at the sampled process, and then averaging the normalized data points. Concentration data reported as "less than" values were averaged as zeros. Concentration data reported as non-detected were not included in the average. A tabulation of all of the analytical data contained on Tables V-30 through V-46 is presented in Section 22.651 of the record. Sampling trip reports containing the original data are located in Sections 8.4, 19.3, and 22.4 of the record.

Previous discussions of raw waste characteristics of metal molding and casting wastewater have focused on the average concentration of a pollutant within a process segment, based on a straight average of all available analytical data. This method does not take into account variable water usage practices at the actual sampled plants. In response to public comments on the validity of conclusions drawn from this approach, the Agency has re-examined the methodology used to determine raw waste characteristics. Based on a review of the data available, and the actual water usage practices under which raw wastewater samples were collected, the Agency has adjusted the procedure by which average raw wastewater characteristics are estimated.

The revised methodology calculates average raw wastewater characteristics based on normalized pollutant generation rates. Measured concentrations at sampled plants are converted to mass generation rates (e.g., mg pollutant per kkg of metal poured) based on the water flow rate and the production at the sampled process. The mass generation rates at each sampled process within a segment are then averaged to determine an average mass generation rate. The Agency favors this method of calculating the mass of pollutants generated because it eliminates the impact of variability of water usage at sampled processes from the calcula-tion of the mass of pollutants generated. Average wastewater characteristics can then be estimated from the average mass generation rates based on median production normalized flows. For example, an average mass generation rate in units of mg/kkg will yield an average concentration in units of mg/l when divided by the median production normalized flow in units of l/kkg.

Effluent Analysis. Samples of the final plant effluents were collected at many of the plants sampled. Since a number of plants had two or more effluent discharges, samples were sometimes collected at each effluent discharge. For those sampled plants which did not have an effluent discharge (i.e., no discharge of process wastewater to a surface water or to a municipal treatment plant), samples of treated recycled wastewater were sometimes collected.

SITE SELECTION RATIONALE AND SAMPLING HISTORY

Three separate sampling efforts have been performed to characterize the metal molding and casting industry raw wastewater. These sampling efforts took place in 1974, 1978, and 1983. Each effort is discussed below.

Table V-49 summarizes the plants sampled, year sampled, and the pollutants for which analyses were performed.

1974 Sampling Effort

In 1974, the Agency visited and collected wastewater samples at 19 ferrous foundries as part of the rulemaking effort for the Iron and Steel Point Source Category. At that time, the foundries industry was included as a Foundries Subcategory in the Iron and Steel Category. Thus the 18 plants from which samples were collected at that time were large ferrous foundries. Samples collected consisted primarily of process wastewater from melting furnace scrubbers, dust collection scrubbers, and slag quenching. Analyses were performed on these samples to determine concentrations of conventional pollutant metals, phenols, cyanide, ammonia, and some priority pollutant metals and other metals. The following plants were sampled during this initial effort:

50315	53219	56771
51026	53642	56789
51115	54321	57100
51473	55122	57775
52491	55217	58589
52881	56123	59101
		59212

1978 Sampling Effort

By 1977, the metal molding and casting point source category had been established as a separate category for foundries and die casting facilities. The metal molding and casting category included plants that mold or cast not only iron and steel, but also aluminum, copper, lead, magnesium, and zinc. Prior to proposing a regulation for this category, the Agency conducted an extensive industry study. This study included a second sampling effort, performed in 1978. Because the first round of sampling in 1974 was conducted exclusively at large ferrous foundries, the second round of sampling focused on nonferrous and small ferrous foundries.

The information contained in the DCP responses served as the primary basis for selecting plants for site or sampling visits during the 1978 program. The criteria used to select specific plants included:

1. The metal cast;

2. The foundry processes that generated wastewaters;

3. The type of air pollution control devices used, i.e., scrubbers or dry controls such as baghouses;

4. The type of wastewater treatment equipment in place;

5. The presence of in-process control technologies that reduced the volume of wastewater; and

6. The degree to which process wastewater was recycled or reused

The plants selected for sampling adequately represent the full range of manufacturing operations found in the industry, as well as the performance of existing treatment systems. The flow rates and pollutant loads in the wastewaters discharged from the operations at these plants should be representative of the flow rates and pollutant loads that would be found in wastewaters generated by similar operations at any plant in the same subcategory. In addition, the sampled plants have a variety of treatment in place. Plants with no treatment were included, as well as plants using the technologies being considered as the basis for regulation.

The following plants were sampled in 1978:

Aluminum Casting	Ferrous Casting
04704	00001
10308*	00002
12040*	06956
17089	07170
18139*	07929
20147	15520
	15654
	20009

Copper Casting	Magnesium Casting
04736	08146
06809	
09094	Zinc Casting
19872	
	04622
	10308*
	12040*
	18139*

*These plants cast both aluminum and zinc.

Generally, two separate visits were made by the EPA project officer and the contractor to each plant selected as a sampling site. During the first visit, an engineering site visit, sample point locations which represented the most appropriate flow measurement locations were identified, and any questions about plant operations were resolved. The engineering site visit was conducted so that the sampling team leader could become sufficiently familiar with the plant to conduct a technically sound sampling survey. The information collected during the engineering site visit, together with the previously obtained information about the plant, was organized into a detailed sampling plan.

During the second visit to the plant, the actual sampling was conducted. Wherever possible, samples were collected by an automatic, time-series compositor over three consecutive 8 to 24 hour sampling and operational periods. Where automatic compositing was not possible, grab samples were collected and composited manually. In addition to the wastewater sampling and flow measurement tasks performed during the sampling visits, specific technical information was also obtained for each sampled plant. This technical information included production and raw material usage during the period of sampling, and routine maintenance procedures and equipment. Also, during the sampling visits, existing or potential problems and preventive maintenance procedures associated with the use of high rate recycle systems were discussed with plant personnel.

A major goal of this study was the characterization of metal molding and casting process wastewaters with respect to toxic pollutants. A complete list of the toxic pollutants, as developed from the NRDC Settlement Agreement and in the Clean Water Act, is presented in Table V-47. Analyses were also performed for a number of other pollutants, many of which are introduced into process wastewater as a result of foundry operations. These pollutants are identified on Table V-48. Analyses for several of these pollutants, i.e., total solids, temperature, calcium hardness, alkalinity, acidity, and pH, were performed so that Langelier Saturation Indices could be determined for various high rate recycle systems. The Langelier Saturation Index provided data which were used to assess the possible scaling or corrosion problems that can be associated with wastewater recycle systems.

Metal analyses on samples collected in 1974 were made by inductively coupled plasma atomic emission spectrometry, except for mercury, which was analyzed by the standard flameless atomic adsorption method. Metals analyses on samples collected in 1978 were performed by appropriate flame and flameless atomic adsorption methods.

Analyses for cyanide and cyanide amenable to chlorination were performed using methods promulgated by the Agency under Section 304(h) of the Act (304(h) methods).

Analysis for asbestos fibers included transmission electron microscopy with selected area defraction; results were reported as chrysotile fiber count.

Analyses for conventional pollutants (BOD5, TSS, pH, and oil and grease) and nonconventional pollutants (ammonia, fluoride, aluminum, magnesium, and iron, etc.) were performed by 304(h) methods.

EPA employed the analytical methods for the organic pollutants that are described in a sampling and analytical protocol. This protocol is set forth in Sampling and Analysis Procedures for Screening of Industrial Effluents for Priority Pollutants, revised April 1977.

Analysis for total phenols was performed using the 4-aminoantipyrine (4-AAP) method.

1983 Sampling Effort

In response to comments on the proposed regulation, the Agency conducted extensive site visits and some additional field sampling in 1983. The most prevalent comment received by EPA was that the proposed requirement for complete recycle was not technically feasible. A number of additional comments indicated that the Agency did not use an appropriate basis for establishing effluent limitations for those process segments where discharges were allowed. It was asserted that the Agency's use of the

combined metals data base to establish limitations for the metal molding and casting category was not appropriate because these data represent treatment of wastewaters from industries whose wastewaters are not comparable to the metal molding and casting industry. In addition, many comments received by EPA asserted that die casting operations discharge very small quantities of wastewater and are significantly different from foundries, and therefore require either no regulation, or regulation as a separate entity from foundries.

To address adequately the above comments the Agency conducted several data gathering and verification efforts, including conducting engineering site visits at 35 metal molding and casting facilities. In addition, the Agency conducted field sampling at seven of those facilities. The goals of the additional site visits and sampling efforts were to:

1. Collect additional data on chemical addition, sedimentation, and filtration wastewater treatment systems at metal molding and casting plants;

2. Observe and collect additional data on wet die casting operations; and

3. Verify the demonstration status of complete recycle/no discharge for scrubber operations.

EPA worked closely with several industry trade associations including American Die Casting Institute, Cast Metals Federation, and American Foundrymen's Society to identify representative plants to visit during these data gathering efforts. The seven plants where field sampling was conducted are listed below:

Metal Molding and Casting Plants Sampled in 1983

Plant	Subcategory
09441	Ferrous
10837	Ferrous
15265	Aluminum
17230	Ferrous
20007	Ferrous
20017	Copper
50000	Ferrous

A complete record of the findings and results of the plant visits and sampling is contained in plant visit reports located in Sections 22.4 and 22.5 of the record. A summary of the sample collection procedures and analytical methods used during the field sampling program is presented here. Samples were generally collected over three consecutive operating days. Operating days varied from 8 to 24 hours in length. Automatic composite samples were collected whenever possible. If automatic compositing equipment could not be used, samples were collected and

composited manually. Samples for oil and grease and phenol analyses were collected once each day as grab samples. Samples for volatile organic priority pollutant analysis were collected as grab samples in 40 ml glass vials (VOA's). VOA's collected on a single sampling day at a single sampling point were composited at the laboratory prior to analysis. As during the sample collection activities conducted in 1978, samples were collected and preserved according to the protocols outlined in: Sampling and Analysis Procedures for Screening of Industrial Effluents for Priority Pollutants, April 1977. Protocols specified in the December 3, 1978 Federal Register, beginning at page 69559 were also followed, as appropriate.

Samples were analyzed for priority pollutant metals (with the exception of mercury) by Atomic Absorption Spectroscopy (AA) and Inductively Coupled Argon Plasma Emission Spectroscopy (ICAPES). The former is described in 40 CFR Part 136 and the latter can be found in the amendments proposed in the December 5, 1979 Federal Register, page 69559. Mercury analysis was performed by automated cold vapor atomic absorption, Method 245.2, Methods for Chemical Analysis of Water and Wastes, U.S. EPA, EMSL, Cincinnati, Ohio, 1979.

Volatile organic priority pollutants were analyzed by GC/MS Method 1624. Acid and base/neutral extractable organic priority pollutants were analyzed by GC/MS Method 1625. In addition to priority pollutant analysis, samples were generally analyzed for total alkalinity, chloride, calcium hardness, pH, phenol (4-AAP), silica, dissolved solids, suspended solids, oil (extraction--gravimetric), sulfate (turbimetric), and ICAPES metals.

WATER USE AND WASTE CHARACTERISTICS

Data collection portfolios, as well as responses to data solicitation and verification efforts conducted in response to industry comments, were used to determine water use and waste characteristics for each process segment in each subcategory. Data available in the DCP's formed the bases of the metal molding and casting water use data base. This data base was updated as additional data were received via industry responses to data solicitations and verification requests. The metal molding and casting water use data base was used to determine applied flow rates, recycle rates, and levels of treatment currently in-place. Analytical data collected during the sampling and analysis program were used to determine raw waste characteristics, as well as the effectiveness of lime and settle treatment technology (the latter is discussed in Section VII).

This subsection discusses the quantity of raw wastewater generated in each subcategory and the quantity of that wastewater that is discharged to navigable waters (direct discharge) and to POTW's (indirect discharge). For each process segment, the quantity of raw wastewater generated, the quantity discharged directly and indirectly, the range of reported recycle rates, the range of applied flow rates, and the treatment currently in-place

is discussed. Finally, a summary of the raw wastewater sampling that was performed is presented for each process segment. Sampling was performed at 17 of the 31 process segments. In process segments where no sampling data are available, the transfer of data from similar segments is discussed.

Tables V-1 through V-29 at the end of this section summarize the applied flow rates reported for each process segment. These flow rates are used in Section IX to select a BPT applied flow rate. Tables V-30 through V-46 at the end of this section summarize the raw wastewater sampling data for each process segment. Figures V-1 through V-46 at the end of this section are process flow schematics which show the location of sampling points at each sampled facility.

Aluminum Subcategory

An estimated 2.41 billion gallons of raw process wastewater are generated each year by discharging facilities in the aluminum subcategory. Sixty percent of this wastewater is generated by facilities discharging to navigable waters, and 40 percent is generated by facilities discharging to POTW's. Plants in the aluminum subcategory account for approximately 3 percent of the raw wastewater generated by plants in the metal molding and casting industry.

Casting Cleaning

Casting cleaning wastewater originates from the application of water to a cast product (casting) to rid it of impurities such as die lubricants or sand. Casting cleaning wastewater does not include wastewater that originates from the rinsing of castings produced by investment casting processes; that wastewater is regulated under investment casting.

An estimated 69.4 million gallons of process wastewater are generated each year by aluminum casting cleaning processes that discharge wastewaters. This represents 2.9 percent of the total raw process wastewater generated by discharging facilities within the aluminum subcategory. Ninety-four percent of aluminum casting cleaning wastewater discharged is discharged to navigable waters, while 6 percent is discharged to POTW's. One plant with this process segment practices recycle and supplied sufficient information to calculate a recycle rate. This plant reported 100 percent recycle. The applied flow rates for this process segment are summarized in Table V-1, and range from 183 gallons/ton to 14,270 gallons/ton.

Two of three facilities with this process segment report having wastewater treatment currently in-place. One plant (plant #12040) has emulsion breaking, gas flotation, lime addition, polymer flocculation, and vacuum filtration. The other plant (plant #74992) has a settling basin with polymer flocculation, and a thickener.

Raw wastewater sampling data that characterize aluminum casting cleaning process wastewater are not available. All data used to characterize the aluminum casting cleaning raw wastewater have been transferred from the ferrous casting cleaning process segment. Both of those process segments process a non-toxic metal (i.e., aluminum or iron) using similar processing steps. Wastewaters from both segments should contain similar levels of toxic metals, organics, conventional and nonconventional pollutants.

Casting Quench

A general process and water flow diagram of a representative aluminum casting quench operation is presented in Figure III-3. The process wastewaters considered in association with this operation are those wastewaters which are discharged from the casting quench tanks.

An estimated 132 million gallons of process wastewater are generated each year by aluminum casting quench processes that discharge wastewater. This represents 5.5 percent of the total raw process wastewater generated by discharging facilities with the aluminum subcategory. Fifty-eight percent of aluminum casting quench wastewater discharged is discharged to navigable waters, while 42 percent is discharged to POTW's. Fourteen plants with this process segment practice recycle and supplied sufficient information to calculate a recycle rate. These recycle rates ranged from 73 percent to 100 percent. The applied flow rates for this process segment are summarized in Table V-2, and range from 1.45 gallons/ton to 6,866 gallons/ton.

Nine of 33 facilities with this process segment report having wastewater treatment currently in-place. Three plants report settling lagoons, five plants report oil skimming, three plants report flocculation using either polymer, alum or lime, one plant reports neutralization using acid and caustic, and one plant reports using activated sludge, a deep sand bed pressure filter, and granular activated carbon.

Raw wastewater sampling was performed at two facilities to characterize aluminum casting quench process wastewater. This raw wastewater data is summarized in Table V-30. Casting quench wastewater contains toxic organic and metal pollutants, oil and grease, and suspended solids.

Plant 10308, Figure V-13, generates zinc casting quench wastes, aluminum casting quench wastes (sample point C), cutting and machining coolant wastes, and impregnating wastes which are co-treated in a batch-type system. After undergoing chemical emulsion breaking using sulfuric acid and alum, neutralization, flocculation and solids separation, the treated effluent is discharged to a landlocked swamp.

Plant 18139, Figure V-21, has a number of casting machines and associated quench tanks which are emptied on a scheduled basis.

The schedule results in the emptying of one 1,135.5 liter (300 gallon) quench tank each operational day. Each quench tank is emptied approximately once a month (aluminum casting quench is sample point E). The quench tank discharge mixes with melting furnace scrubber discharges, zinc casting quench tank flows, and other non-foundry flows prior to settling and skimming. The treated process wastewaters are discharged to a POTW.

Die Casting

A general process and water flow diagram of a representative aluminum die casting operation is depicted in Figure III-3. Sources of die casting wastewaters include leakage of hydraulic fluid from hydraulic systems associated with die casting operations and discharge of die lube solutions that are applied to the die surface prior to casting. Die lube solutions are emulsions that contain casting release agents which permit the casting to fall away or be readily removed from the dies. Any process water used for the cooling of dies or castings still contained in dies is not considered die casting wastewater; rather, it is mold cooling wastewater.

An estimated 56 million gallons of process wastewater are generated each year by aluminum die casting processes that discharge wastewater. This represents 2.3 percent of the total raw process wastewater generated by discharging facilities within the aluminum subcategory. Twenty-three (23) percent of aluminum die casting wastewater discharged is discharged to navigable waters, while 77 percent is discharged to POTW's. Nine plants with this process segment practice recycle and supplied sufficient information to calculate a recycle rate. These recycle rates ranged from 20 percent to 100 percent. The applied flow rates for this process segment are summarized in Table V-3, and range from 2.1 gallons/ton to 600 gallons/ton.

Twenty of 41 facilities with this process segment report having wastewater treatment currently in-place. Ten plants have settling basins, 14 have oil skimming, one plant has emulsion breaking, six plants have lime precipitation, polymer addition and settling, five plants have either pressure or deep sand filters, and three plants have biological treatment.

Raw wastewater sampling was performed at four facilities to characterize aluminum die casting process wastewater. This raw wastewater data is summarized in Table V-31. Die casting wastewater contains toxic organic and metal pollutants, phenols, emulsified and free oil, and suspended solids.

Plant 12040, Figure V-15, produces aluminum (sample point B) and zinc die casting process wastewaters which are co-treated. After collection in a receiving tank where oil is skimmed, they are batch treated by emulsion breaking, flocculation and settling before discharge. The released oil is returned to the receiving tank for skimming, and the settled wastes are vacuum filtered and dried before being landfilled. Filtrate water is returned to the

receiving tank.

Plant 15265, Figure V-16, has an aluminum die casting operation. Wastewater from this operation, sample point C, is commingled with impregnation system water and miscellaneous foundry process water prior to treatment. Treatment consists of oil removal, activated sludge, lime and polymer addition, clarification, and sand filtration.

Plant 17089, Figure V-19, produces die casting and casting quench wastes (sample point C) which are skimmed of oil and then co-treated with melting furnace scrubber wastewaters. The treatment consists of alum and polymer additions in a flash mix tank followed by clarification, pressure filtration, recycle, and discharge. Clarifier underflow is thickened and dewatered in a centrifuge before being dried in a basin. Sixty-five percent of the treated water is reused in the plant, and the remainder is discharged.

Plant 20147, Figure V-26, indicated that the sources of die casting process wastewaters are: (1) excess die lube sprayed on the dies for additional cooling, (2) leakage from die cooling (noncontact cooling water which becomes mixed with process wastewater), (3) leakage from hydraulic system cooling water (noncontact cooling water which passes through a heat exchanger to cool the hydraulic oil and become mixed with process wastewater), and (4) hydraulic oil leakage. Process wastewater is controlled in three ways. On each shift, maintenance personnel inspect each die casting machine for leaks. Where necessary, repairs are made during the shift to reduce the process wastewater flow. Under the die of each machine, a pan collects excess die lube which drips from the die. A portable pump and tank is wheeled to each machine during each shift to collect the die lube collected in the pans. In addition, on the floor around each die casting machine, a dam contains the process wastewater from various leaks. Die lubricant which does not collect in the pan is also contained by the dam. The process wastewater collected in this manner flows to storage tanks through a floor drain (sample point C).

Stratification of the process wastewater into three layers occurs in the storage tanks. Tramp oil floats to the top and is removed by a belt collector. The tramp oil is collected, stored, and removed by a contractor. The middle layer, comprised of die lubricant, is removed to a second tank. From this second tank, the die lubricant passes through a cyclonic filter. The die lubricant removed through the top of the cyclone passes through a paper filter and then is stored, until it is reused on the die casting machines. The material removed from the bottom of the cyclone is stored, until it is removed by a contract hauler.

Die lubricants collected in the pans beneath the dies (sample point G) are removed to the reconstruction area of the plant, where the used die lubricant passes through a paper filter, is mixed with new lubricant and water to bring it up to

specification, and is stored until needed on the die casting machines.

Dust Collection Scrubber

Dust collection scrubber wastewater originates in the removal of dust from air in a scrubber, when water or process wastewater is used as a cleaning medium. The dust may originate with sand preparation, sand molding, core making, sand handling and transfer, the removal of sand from the casting (including shake-out and shot-blasting), or other dust sources on the foundry floor. Wastewater that originates from pouring floor, pouring ladle, and transfer ladle fume scrubbing also is included when these fumes are collected in an air duct system common with sand dusts. Wastewater that originates from core and mold making fume scrubbing is also included in dust collection scrubbing, except when such fumes are cleaned in a separate scrubbing device dedicated to the core and mold making fumes, and the resulting wastewater is then contract hauled or sent to a reclaimer. Wastewater that originates from dust collection scrubbers associated with investment casting operations are regulated under the investment casting process segment.

An estimated 59.4 million gallons of process wastewater are generated each year by aluminum dust collection scrubber processes that discharge wastewater. This represents 2.5 percent of the total raw process wastewater generated by discharging facilities within the aluminum subcategory. Fifty-five percent of aluminum dust collection scrubber wastewater discharged is discharged to navigable waters, while 45 percent is discharged to POTW's. Three plants with this process segment practice recycle and supplied sufficient information to calculate a recycle rate. These recycle rates ranged from 75 percent to 99 percent. The applied flow rates for this process segment are summarized in Table V-4, and range from 0.03 gallons/1,000 scf to 10.4 gallons/1,000 scf.

Two of 14 facilities with this process segment report having wastewater treatment currently in-place. One plant (#00206) reported a settling lagoon, and another plant (#74992) reported a settling basin.

Raw wastewater sampling data that characterize aluminum dust collection scrubber wastewater are not available. All data used to characterize aluminum dust collection scrubber wastewater have been transferred from the aluminum melting furnace scrubber segment. Both of these segments generate wastewaters from the wet scrubbing of dusts and fumes related to aluminum metal molding and casting operations. Pouring floor and pouring ladle fumes can either be routed to a melting furnace scrubber or a dust collection scrubber depending on a plant's actual duct configuration. Because both melting furnace scrubbers and dust collection scrubbers are employed on air flows with similar characteristics, wastewaters from both segments should contain similar levels of toxic metals, organics, conventional, and

nonconventional pollutants.

Grinding Scrubber

Grinding scrubber wastewater originates from the removal of grinding dust from air in a scrubber, when water or process wastewater is used as a cleaning medium. Grinding dust is generated during the mechanical abrading, or preliminary grinding of castings following removal from the mold.

An estimated 0.89 million gallons of process wastewater are generated each year by aluminum grinding scrubber processes that discharge wastewater. This represents 0.04 percent of the total raw process wastewater generated by discharging facilities within the aluminum subcategory. Twenty-six percent of aluminum grinding scrubber wastewater discharged is discharged to navigable waters, while 74 percent is discharged to POTW's. No plant with this process segment practices recycle and supplied sufficient information to calculate a recycle rate. The applied flow rates for this process segment are summarized in Table V-5, and range from 0.033 gallons/1,000 scf to 1.75 gallons/1,000 scf.

One of three facilities with this process segment reported having wastewater treatment currently in-place. This plant (#04704) has alkali addition, polymer flocculation, lamella plate settling, and filtration.

Raw wastewater sampling data that characterize aluminum grinding scrubber wastewater are not available. All data used to characterize aluminum grinding scrubber wastewater have been transferred from the magnesium grinding scrubber segment. Both of these segments generate wastewater from the wet scrubbing of grinding dusts generated by processing a non-toxic metal (i.e., aluminum and magnesium) casting, using similar technology and equipment. Therefore, wastewaters from both segments should contain similar levels of toxic metals, organics, conventional, and nonconventional pollutants.

Investment Casting

A general process and water flow diagram of a representative aluminum investment casting operation is presented in Figure III-2. The process wastewater in this operation results from several processes. The processes are mold backup, hydroblast (of castings), and dust collection (used in conjunction with hydroblasting and the handling of the investment material and castings).

An estimated 79.2 million gallons of process wastewater are generated each year by aluminum investment casting processes that discharge wastewater. This represents 3.3 percent of the total raw process wastewater generated by discharging facilities within the aluminum subcategory. Ninety-one percent of aluminum investment casting wastewater discharged is discharged to navigable waters, while 9 percent is discharged to POTW's. No

plant with this process segment practices recycle and supplied sufficient information to calculate a recycle rate. The applied flow rates for this process segment are summarized in Table V-6, and range from 3,000 gallons/ton to 68,550 gallons/ ton. As discussed in Section IX, aluminum, copper, and ferrous investment casting applied flow rates are considered together because half of the investment casting plants surveyed cast all three metals using the same or similar equipment.

All three facilities with this process segment report having wastewater treatment currently in-place. One plant (#04704) has polymer flocculation, Lamella plate settling, and paper filtration. Another plant (#05206) has a settling basin. The third plant (#20063) has a settling lagoon.

Raw wastewater sampling was performed at one facility to characterize investment casting process wastewater. This raw wastewater data is summarized in Table V-32. These data show treatable concentrations of toxic organic and metal pollutants, oil and grease, and suspended solids.

Plant 04704, Figure V-4, generates process wastewaters from mold back-up, hydroblast casting cleaning, and dust collection, which are co-treated (sample points B, D and E, respectively). Polymer is added to aid settling in a Lamella plate separator. The Lamella sludge is filtered through a paper filter, with the filtrate being returned to the headworks of the treatment system. The treated effluent is discharged to a river.

Melting Furnace Scrubber

A general process and water flow diagram of a representative aluminum melting furnace operation and its scrubber system is presented in Figure III-2. The quality and cleanliness of the material charged in the furnace influences the emissions from the furnace. Generally, aluminum furnaces which melt high quality material do not require "wet" air pollution control devices (i.e., afterburners may be used for air pollution control). However, when dirty, oily scrap is charged, the furnace emissions are often controlled through the use of scrubbers. The process wastewater from these scrubbers may be either recirculated within the scrubber equipment package (which includes a settling chamber) or discharged to an external treatment system and then recycled back to the scrubber.

An estimated 1,148 million gallons of process wastewater are generated each year by aluminum melting furnace scrubber processes that discharge wastewater. This represents 47.7 percent of the total raw process wastewater generated by discharging facilities within the aluminum subcategory. Eighty-one percent of aluminum melting furnace scrubber wastewater discharged is discharged to navigable waters, while 19 percent is discharged to POTW's. Six plants with this process segment practice recycle and supplied sufficient information to calculate a recycle rate. These recycle rates ranged from 37 percent to 98

percent. The applied flow rates for this process segment are summarized in Table V-7, and range from 0.43 gallons/1,000 scf to 12 gallons/ 1,000 scf.

Three of seven facilities with this process segment report having wastewater treatment currently in-place. Plant #13562 employs oil skimming and settling. Plant #17089 employs oil skimming, settling, polymer addition, pressure filtration and activated carbon adsorption. Plant #20114 employs acid neutralization and settling in a holding tank.

Raw wastewater sampling was performed at two facilities to characterize aluminum melting furnace scrubber process wastewater. This raw wastewater data is summarized in Table V-33. That data shows treatable concentrations of toxic metal and organic pollutants, phenols, oil and grease, and suspended solids.

Plant 17089, Figure V-19, produces die casting and casting quench process wastewaters which are skimmed of oil and then co-treated with melting furnace scrubber process wastewaters (melting furnace scrubber water is sample point E). At the time of sampling, the treatment consisted of alum and polymer additions in a flash mix tank followed by clarification, pressure filtration, recycle, and discharge. The clarifier underflow was thickened and dewatered in a centrifuge before being dried in a basin. Sixty-five percent of the treated process wastewater was reused in the plant, while the remainder was discharged to navigable waters. Since the completion of the sampling visit, this plant has added an activated carbon adsorption system.

Plant 18139, Figure V-21, generates process wastewater from a Venturi scrubber on the aluminum melting furnaces (sample point C). The process wastewater is recirculated through a settling tank. Overflow from the setting tank is mixed with process wastewaters from the zinc melting furnace and aluminum and zinc casting quenches. The mixed process wastewater passes through a settling basin, an oil separator and storage tanks before discharge.

Mold Cooling

Mold cooling wastewater originates from the direct spray cooling of a mold or die, or of the casting, in an open mold. Water that circulates in a noncontact cooling water system in the interior of a mold is not considered mold cooling process wastewater unless it leaks from the system and is commingled with other process wastewaters.

An estimated 861 million gallons of process wastewater are generated each year by aluminum mold cooling processes that discharge wastewater. This represents 35.8 percent of the total raw process wastewater generated by discharging facilities within the aluminum subcategory. Thirty percent of aluminum mold cooling wastewater discharged is discharged to navigable waters,

while 70 percent is discharged to POTW's. Seven plants with this process segment practice recycle and supplied sufficient information to calculate a recycle rate. These recycle rates ranged from 37 percent to 99.9 percent. The applied flow rates for this process segment are summarized in Table V-8, and range from 103.2 gallons/ton to 202,300 gallons/ton.

Five of 17 facilities with this process segment report having wastewater treatment currently in-place. Two plants have emulsion breaking, four plants have oil removal, one plant has lime precipitation, and one plant only has a settling lagoon.

Raw wastewater sampling data that characterize aluminum mold cooling wastewater are not available. All data used to characterize aluminum mold cooling wastewater have been transferred from the aluminum casting quench segment. Both of these segments generate wastewater from the contact cooling of metallic mold or casting surfaces. Data available for the ferrous subcategory indicate that mold cooling and casting quench wastewater have similar characteristics. Therefore, wastewaters from the aluminum casting quench and mold cooling segments should contain similar levels of toxic metals, organics, conventional, and nonconventional pollutants.

Copper Subcategory

An estimated 12.01 billion gallons of raw process wastewater are generated each year by discharging facilities in the copper subcategory. Eighty-five percent of this wastewater is generated by facilities discharging to navigable waters, and 15 percent is generated by facilities discharging to POTW's. Plants in the copper subcategory account for approximately 14 percent of the raw wastewater generated by plants in the metal molding and casting industry.

Casting Quench

Casting quench wastewater originates in the immersion of a hot casting in a water bath to rapidly cool the casting, or to change the metallurgical properties of the casting.

An estimated 823 million gallons of process wastewater are generated each year by copper casting quench processes that discharge wastewater. This represents 6.9 percent of the total raw process wastewater generated by discharging facilities within the copper subcategory. Fifty-eight (58) percent of copper casting quench wastewater discharged is discharged to navigable waters, while 42 percent is discharged to POTW's. Seven plants with this process segment practice recycle and supplied sufficient information to calculate a recycle rate. These recycle rates ranged from 92 percent to 100 percent. The applied flow rates for this process segment are summarized in Table V-9, and range from 8.93 gallons/ton to 26,470 gallons/ton.

Twelve of 21 facilities with this process segment report having wastewater treatment currently in-place. Five plants have cooling towers, two plants have oil skimming, three plants have chemical addition, and five plants have settling basins or lagoons.

Raw wastewater sampling data that characterize copper casting quench wastewater are not available. All data used to characterize copper casting quench wastewater have been transferred from the copper mold cooling segment. Both of these segments generate wastewater from the contact cooling of metallic mold or casting surfaces. Data available for the ferrous subcategory indicate that mold cooling and casting quench wastewater have similar characteristics. Therefore, wastewaters from the copper casting quench and mold cooling segments should contain similar levels of toxic metals, organics, conventional, and nonconventional pollutants.

Direct Chill Casting

Direct chill casting wastewater is contact cooling water used during the direct chill casting operation. The cooling water may be sprayed directly onto the hot casting, or it may be present as a contact cooling water bath into which the cast product is lowered as it is cast.

An estimated 7,427 million gallons of process wastewater are generated each year by copper direct chill casting processes that discharge wastewater. This represents 61.8 percent of the total raw process wastewater generated by discharging facilities within the copper subcategory. One hundred percent of copper direct chill casting wastewater discharged is discharged to navigable waters, while none is discharged to POTW's. Seven plants with this process segment practice recycle and supplied sufficient information to calculate a recycle rate. These recycle rates ranged from 92 percent to 99 percent. The applied flow rates for this process segment are summarized in Table V-10, and range from 2,858 gallons/ton to 9,617 gallons/ton.

Six of seven facilities with this process segment report having wastewater treatment currently in-place. One plant has a cooling tower, one plant has oil skimming, two plants have equalization (one of these two has chromium reduction), three plants have chemical addition, and three plants have settling devices.

Raw wastewater sampling was performed at one facility to characterize copper direct chill casting process wastewater. This raw wastewater data is summarized in Table V-34. Direct chill casting water contains toxic metal pollutants, oil and grease, and suspended solids.

Plant 20017, Figure V-25, operates several direct chill casting units. Three of these units (numbers 2, 3 and 5) discharge into the east hot well. Samples were taken of the water in this hot well (sample point C). From this hot well, most of the water is

recirculated to the casting operation through a cooling tower, while a portion is bled-off to treatment. Treatment consists of lime and polymer addition, followed by clarification.

Dust Collection Scrubber

A general process and water flow diagram of a typical copper dust collection scrubber system is presented in Figure III-4. Dust collection scrubber wastewater originates in the removal of dust from air in a scrubber, when water or process wastewater is used as a cleaning medium. The dust may originate with sand preparation, sand molding, core making, sand handling and transfer, the removal of sand from the casting (including shake-out and shot-blasting), or other dust sources on the foundry floor. Wastewater that originates from pouring floor, pouring ladle, and transfer ladle fume scrubbing also is included when these fumes are collected in an air duct system common with sand dusts. Wastewater that originates from core and mold making fume scrubbing is also included in dust collection scrubbing, except when such fumes are cleaned in a separate scrubbing device dedicated to the core and mold making fumes, and the resulting wastewater is then contract hauled or sent to a reclaimer. Wastewater that originates from dust collection scrubbers associated with investment casting operations are regulated under the investment casting process segment.

An estimated 289 million gallons of process wastewater are generated each year by copper dust collection scrubber processes that discharge wastewater. This represents 2.4 percent of the total raw process wastewater generated by discharging facilities within the copper subcategory. Eighty-two (82) percent of copper dust collection scrubber wastewater discharged is discharged to navigable waters, while 18 percent is discharged to POTW's. Seven plants with this process segment practice recycle and supplied sufficient information to calculate a recycle rate. The recycle rates ranged from 97 percent to 100 percent. The applied flow rates for this process segment are summarized in Table V-11, and range from 0.03 gallons/1,000 scf to 11 gallons/1,000 scf.

Five of 13 facilities with this process segment report having wastewater treatment currently in-place. Treatment consists of primary settling using either a settling basin or settling lagoon.

Raw wastewater sampling was performed at two facilities to characterize copper dust collection scrubber process wastewater. This raw wastewater data is summarized in Table V-35. Dust collection scrubber water contains toxic metal and organic pollutants, oil and grease, phenols, and suspended solids.

Plant 09094, Figure V-11, produces process wastewater from three internal recycle dust collectors (only two scrubbers were sampled - sample points D and E). The process wastewaters are collected and treated in a series of three lagoons to provide solids removal. The lagoon effluent is recycled back to the scrubbers.

Discharge from the ponds was eliminated in 1977 when the ponds were dammed. Additional water from the lagoons is used to sluice the sludge from the settling chambers of the three scrubbers to the first pond.

Plant 19872, Figure V-22, uses a dust collector scrubber with an internal recycle rate of 100 percent. Samples of scrubber liquor (sample point B) were taken from this recycle loop. Settled sludge is removed by a dragout mechanism for disposal.

Grinding Scrubber

Grinding scrubber wastewater originates from the removal of grinding dust from air in a scrubber, when water or process wastewater is used as a cleaning medium. Grinding dust is generated during the mechanical abrading, or preliminary grinding of castings following removal from the mold.

An estimated 2.6 million gallons of process wastewater are generated each year by copper grinding scrubber processes that discharge wastewater. This represents 0.02 percent of the total raw process wastewater generated by discharging facilities within the copper subcategory. None of this wastewater quantity is discharged to navigable waters, while 100 percent of copper grinding scrubber wastewater discharged is discharged to POTWs. Two plants with this process segment practice recycle and supplied sufficient information to calculate a recycle rate. These two plants reported recycle rates of 100 percent. The applied flow rates for this process segment are summarized in Table V-12. Only one plant reported sufficient information to calculate an applied flow rate. Plant #04851 reported an applied flow of 0.111 gallons/1,000 scf.

Three of six facilities with this process segment report having wastewater treatment currently in-place. Two plants employ primary settling using a settling lagoon and one plant employs caustic addition.

Raw wastewater sampling data that characterize copper grinding scrubber wastewater are not available. All data used to characterize copper grinding scrubber wastewater have been transferred from the copper direct chill casting segment. This data transfer is appropriate because both operations produce similar effects on the outer surface of the workpiece: direct chill casting flashes off the skin from a hot ingot, and grinding scrubber wastewater is generated by a process where that same surface is physically abraded off. In both cases, the outer surface of the workpiece becomes the major pollutant load introduced into the wastewater. Therefore, wastewaters from both segments should contain similar levels of toxic metals, organics, conventional, and nonconventional pollutants.

Investment Casting

Copper investment casting wastewater is generated during

investment mold backup, hydroblast cleaning of investment castings, and the collection of dust resulting from the hydroblasting of castings and the handling of the investment material. Operations generating investment casting wastewaters are sometimes called lost wax, lost pattern, hot investment, or precision casting processes.

An estimated 16.9 million gallons of process wastewater are generated each year by copper investment casting processes that discharge wastewater. This represents 0.1 percent of the total raw process wastewater generated by discharging facilities within the copper subcategory. None of this wastewater quantity is discharged to navigable waters, while 100 percent of copper investment casting wastewater discharged is discharged to POTW's. No plant with this process segment practices recycle. The applied flow rates for this process segment are summarized in Table V-6, and range from 3,000 gallons/ton to 68,550 gallons/ton. As discussed in Section IX, aluminum, copper and ferrous investment casting applied flow rates are considered together because half of the investment casting plants surveyed cast all three metals using the same or similar equipment.

No facility with this process segment reports having wastewater treatment currently in-place.

Raw wastewater sampling data that characterize copper investment casting wastewater are not available. Because of the expected similarity in discharges from the copper mold cooling, copper direct chill casting, and the copper dust collection process segments (for which raw wastewater data are available) and the mold backup, hydroblast, and dust collection processes character istic of copper investment casting, the Agency relied on a composite transfer from these copper process segments to the copper investment casting segment. EPA calculated a straight average of available data for the copper dust collection, copper mold cooling, and copper direct chill casting segments to characterize copper investment casting wastewater. The resulting composite is expected to be representative of the levels of toxic metal, toxic organic, nonconventional, and conventional pollutants discharged from the copper investment casting process segment.

Melting Furnace Scrubber

A schematic of a copper foundry employing a melting furnace is presented in Figure III-4. Melting furnace scrubber wastewater is generated during the removal of dust and fumes from furnace exhaust gases in a scrubber, when water or process wastewater is used as a cleaning medium. The dust and fumes are generated by melting or holding furnace operations and are expelled in the exhaust gases from these operations. Wastewater from pouring floor, pouring ladle, and transfer ladle fume scrubbing is also included when the fumes from these operations are collected in an air duct system common with the melting or holding furnace fumes.

An estimated 144 million gallons of process wastewater are generated each year by copper melting furnace scrubber processes that discharge wastewater. This represents 1.2 percent of the total raw process wastewater generated by discharging facilities within the copper subcategory. One hundred percent of the copper melting furnace scrubber wastewater discharged is dis-charged to navigable waters, while none is discharged to POTW's. No plants with this process segment practice recycle and sup-plied sufficient information to calculate a recycle rate. The applied flow rates for this process segment are summarized in Table V-13, and range from 0.81 gallons/1,000 scf to 9.54 gallons/1,000 scf.

One of four facilities with this process segment reports having wastewater treatment currently in-place. Plant #25005 reports a cooling tower, lime and caustic addition, clarification, and vacuum filtration.

Raw wastewater sampling data that characterize copper melting furnace scrubber wastewater are not available. All data used to characterize copper melting furnace scrubber wastewater have been transferred from the copper dust collection scrubber segment. Both of these segments generate wastewaters from the wet scrubbing of dusts and fumes related to copper metal molding and casting operations. Pouring floor and pouring ladle fumes can either be routed to a melting furnace scrubber or a dust collection scrubber depending on a plant's actual exhaust duct configuration. Because both melting furnace scrubbers and dust collection scrubbers are employed on air flows with similar characteristics, wastewaters from both segments should contain similar levels of toxic metals, organics, conventional, and nonconventional pollutants.

Mold Cooling

Mold cooling wastewater originates from the direct spray cooling of a mold or die, or of the casting, in an open mold. Water that circulates in a noncontact cooling water system in the interior of a mold is not considered mold cooling process wastewater unless it leaks from the system and is commingled with other process wastewaters.

An estimated 3,307 million gallons of process wastewater are generated each year by copper mold cooling processes that discharge wastewater. This represents 27.5 percent of the total raw process wastewater generated by discharging facilities within the copper subcategory. Fifty-nine percent of copper mold cooling wastewater discharged is discharged to navigable waters, while 41 percent is discharged to POTW's. Five plants with this process segment practice recycle and supplied sufficient information to calculate a recycle rate. These recycle rates ranged from 92 percent to 99.5 percent. The applied flow rates for this process segment are summarized in Table V-14, and range from 16.7 gal/ton to 12,817 gal/ton.

Six of 11 facilities with this process segment report having wastewater treatment currently in place. Three plants have cooling towers, one plant has oil skimming, two plants employ chemical addition and solids removal, and one plant has a settling lagoon.

Raw wastewater sampling was performed at two facilities to characterize copper mold cooling process wastewater. This raw wastewater data is summarized in Table V-36. These data show treatable concentrations of toxic organic and metal pollutants, oil and grease, and suspended solids.

Plant 04736, Figure V-5, uses a mold cooling and casting quench operation (sample point D). This process operates with a high degree of recycle, with makeup via a float valve. An auxiliary holding tank is installed to maintain a water balance in this system.

Plant 06809, Figure V-6, recycles its mold cooling (sample point C) wastewater through a cooling tower. Overflow from the hot wells serves as a blowdown from this recycle system. This blowdown undergoes treatment (sedimentation and skimming) in a central treatment system. The mold cooling wastewater comprises 3 percent of the total flow to the central lagoon.

Ferrous Subcategory

An estimated 68.95 billion gallons of raw process wastewater are generated each year by discharging facilities in the ferrous subcategory. Fifty-four percent of this wastewater is generated by facilities discharging to navigable waters, and 46 percent is generated by facilities discharging to POTW's. Plants in the ferrous subcategory account for approximately 82 percent of the raw wastewater generated by plants in the metal molding and casting industry.

Casting Cleaning

Casting cleaning wastewater originates from the application of water to a cast product (casting) to rid it of impurities such as die lubricants or sand. Casting cleaning wastewater does not include wastewater that originates from the rinsing of castings produced by investment casting processes; that wastewater is regulated under investment casting.

An estimated 294 million gallons of process wastewater are generated each year by ferrous casting cleaning processes that discharge wastewater. This represents 0.4 percent of the total raw process wastewater generated by discharging facilities with in the ferrous subcategory. Eighty-four percent of this wastewater quantity is discharged to navigable waters, while 16.5 percent is discharged to POTW's. Two plants with this process segment practice recycle and supplied sufficient information to calculate a recycle rate. These recycle rates ranged from 50 percent to 95 percent. The applied flow rates for this process

segment are summarized in Table V-15, and range from 0.14 gal/ton to 4,831 gal/ton.

Eleven of 17 facilities with this process segment report having wastewater treatment currently in-place. One plant has emulsion breaking, three have oil removal, two have chemical addition, 11 have settling devices, and three have filters.

Raw wastewater sampling was performed at one facility to characterize ferrous casting cleaning process wastewater. This raw wastewater data is summarized in Table V-37. Casting cleaning water is characterized by the presence of treatable concentrations of toxic metal pollutants, oil and grease, and suspended solids.

Casting cleaning wastewater at Plant 10837, Figure V-14, was sampled. Samples were taken at point H, casting washwater tank, to characterize this stream. Plant 10837 has a treatment system consisting of equalization, emulsion breaking, chemical addition, clarification, and sand filtration.

Casting Quench

Figure III-5 presents a general process and water flow diagram of a representative ferrous casting facility. In this process, process wastewaters are generated as a result of quenching castings in contact cooling water. Quenching of the castings takes place either subsequent to casting or in a heat treatment operation following the casting operation.

An estimated 3,042 million gallons of process wastewater are generated each year by ferrous casting quench processes that discharge wastewater. This represents 4.4 percent of the total raw process wastewater generated by discharging facilities within the ferrous subcategory. Fifty-five percent of ferrous casting quench wastewater discharged is dis-charged to navigable waters, while 45 percent is discharged to POTW's. Twenty-four plants with this process segment practice recycle and supplied sufficient information to calculate a recycle rate. These recycle rates ranged from 54 percent to 100 percent. The applied flow rates for this process segment are summarized in Table V-16, and range from 0.13 gal/ton to 8,229 gal/ton.

Twenty-eight of 62 facilities with this process segment report having wastewater treatment currently in-place. Eight plants employ cooling towers, two plants have oil removal, 19 plants use settling devices, and two plants have filters.

Raw wastewater sampling was performed at two facilities to characterize ferrous casting quench process wastewater. This raw wastewater data is summarized in Table V-38. Casting quench water is characterized by treatable concentrations of toxic organic and metal pollutants, and suspended solids.

Plant 20007, Figure V-23, operates a casting quench operation. Samples were taken at point C to characterize this water. Treatment at this plant consists of sedimentation using alum and polymer flocculation, prior to discharge to a POTW.

Plant 51115, Figure V-30, operates a casting quench operation (sample point 5). City water is used in quench tanks to rapidly cool steel castings. Quench water is completely reused except for emergency discharges to a sanitary sewer.

Dust Collection Scrubber

A general process and water flow diagram of a typical ferrous dust collection scrubber system is presented in Figure III-5. Dust collection scrubber wastewater originates in the removal of dust from air in a scrubber, when water or process wastewater is used as a cleaning medium. The dust may originate with sand preparation, sand molding, core making, sand handling and transfer, the removal of sand from the casting (including shake-out and shot-blasting), or other dust sources on the foundry floor. Wastewater that originates from pouring floor, pouring ladle, and transfer ladle fume scrubbing also is included when these fumes are collected in an air duct system common with sand dusts. Wastewater that originates from core and mold making fume scrubbing is also included in dust collection scrubbing, except when such fumes are cleaned in a separate scrubbing device dedicated to the core and mold making fumes, and the resulting wastewater is then contract hauled or sent to a reclaimer. Wastewater that originates from dust collection scrubbers associated with investment casting operations are regulated under the investment casting process segment.

An estimated 31,693 million gallons of process wastewater are generated each year by ferrous dust collection scrubber processes that discharge wastewater. This represents 46 percent of the total raw process wastewater generated by discharging facilities within the ferrous subcategory. Fifty-two percent of ferrous dust collection scrubber wastewater discharged is discharged to navigable waters, while 48 percent is discharged to POTW's. One hundred twenty-seven plants with this process segment practice recycle and supplied sufficient information to calculate a recycle rate. These recycle rates ranged from 18 percent to 100 percent. The applied flow rates for this process segment are summarized in Table V-17, and range from 0.00036 gal/1,000 SCF to 105 gal/1,000 SCF.

Ninety-four of 194 facilities with this process segment report having wastewater treatment currently in-place. Five plants report using cooling towers, one plant reports emulsion breaking, 14 plants employ oil removal technology, 14 plants employ chemical addition, 88 plants have settling devices, nine plants use filtration, and one plant reports using powdered activated carbon.

Raw wastewater sampling was performed at 14 facilities to characterize ferrous dust collection scrubber process wastewater. This raw wastewater data is summarized in Table V-39. Ferrous dust collection scrubber water is characterized by treatable concentrations of toxic organic and metal pollutants, oil and grease, phenols, and suspended solids.

Plant 06956, Figure V-7, generates wastewaters from dust collection (sample point J), melting furnace scrubber (sample point H), and slag quenching (sample point K) operations. These wastewaters are combined for treatment. The wastewaters are first treated in a clarifier with polymer added to enhance solids removal and lime added for metals precipitation. The clarifier effluent flows to a lagoon from which a portion of the treated wastewaters are recycled to the processes listed above. The lagoon not only provides system holding capacity but also provides additional solids removal capability. Clarifier sludge is transported to a landfill disposal site. The overall recycle rate of this combined system is 95 percent; the remainder is discharged to a receiving stream.

Plant 07929, Figure V-9, has operated nine dust collection scrubbers at 100 percent recycle of process wastewater since 1973 (sample points C, D, F, G, H, J). These nine scrubbers remove airborne particulates generated in the casting shakeout area, core room mullers, pouring, casting cooling lines, sand handling and transfer system, and the molding floor and molding line areas. Western bentonite clay is used in the foundry sand. A two compartment concrete settling tank was installed in 1973. Only one settling compartment is used at a time, and, as necessary, the compartments are switched to allow for sludge removal. The solids are landfilled on company property. An inertial grit separator was installed in 1978. Prior to the installation of the grit separator, the scrubbers would become fouled approximately once per month. The fouling was believed by plant personnel to be caused by bentonite clay. The cleaning of all the scrubbers required a maintenance effort of three men for three 8-hour shifts. At the time of the installation of the grit separator, a maintenance program employing a 1,000 psi pump and hand held cleaning wand was initiated to clean the scrubbers on a routine basis. All scrubber cleaning is performed one weekend per month by one maintenance man and a helper.

Plant 09441, Figure V-12, has a dust collection scrubber. Water is recycled at a rate of 21 gal/min, and is batch dumped twice a week. These batch dumps (sample point E) are treated with primary settling in a pond prior to discharge.

Plant 10837, Figure V-14, operates a dust collection scrubber system for a mold making shakeout operation. Water from this scrubber (sample point D) is treated through polymer-aided clarification and sand filtration prior to discharge to a surface water.

Plant 15520, Figure V-17, is a large foundry with a complex water balance. Dust collection scrubber process wastewaters (sample points G and E), slag quench process wastewaters, and sand washing process wastewaters are settled and recycled with makeup from noncontact cooling water. As water balance upsets occur, overflow is periodically discharged to a POTW.

Plant 15654, Figure V-18, has a sand dryer scrubber which was sampled (sample point G). This water is continually recirculated through a casting wheel cooling water system, except for evaporative losses.

Plant 17230, Figure V-20, has a dust collection scrubber system consisting of dust collectors and settling and recirculation tanks. Samples of dust collection scrubber water were collected at sample point E.

Plant 20007, Figure V-23, has several dust collection scrubbers. Wastewater from three of these scrubbers, the North End Scrubber, and South End Scrubber Nos. 10 and 15, were commingled at the time of sampling (sample point B). The commingled scrubber wastewater is treated by flocculant addition and clarification, prior to discharge to a POTW.

Plant 20009, Figure V-24, has six wet dust collection scrubbers. Wastewater from two of the scrubbers, the kiln dust scrubber and the chromite scrubber, are commingled with kiln cooler water. This commingled wastewater was sampled (sample point D). The commingled wastewater is settled in a series of four lagoons. Settled sludge from the ponds is removed to a landfill. Forty percent of the lagoon water is discharged by overflow to a POTW, and 60 percent of the lagoon wastewater is discharged to a surface water. The remaining four scrubbers operate with an overflow to a POTW. Wastewater from one of these scrubbers, scrubber No. 3, was sampled (sample point G).

Plant 50000, Figure V-27, has a shakeout dust collection scrubber. Wastewater from this scrubber (sample point E) is treated through chemical addition and clarification, prior to discharge to a surface water.

Plant 50315, Figure V-28, generates process wastewater from scrubbers which clean dusts from sand molding operations (sample point 2). The process wastewater drains to a lagoon for settling. One hundred percent of this process wastewater has been recycled back to the dust collection scrubbers since 1974.

Plant 51115, Figure V-30, has two interconnected 100 percent recycle process wastewater systems. The treatment system was originally installed in 1959. Prior to 1976, process wastewater was discharged to a navigable water. In 1976 this discharge was eliminated, when 100 percent recycle of the process wastewater was achieved. Three scrubbers which clean dusts from the core room and shakeout area are in operation at this foundry. Process wastewaters from the sand washer and the dust scrubbers (sample

point 3) flow by gravity to a collection tank. Water in the collection tank flows via gravity to the grit building where alum, polymer, and flocculant aids are added. Solids are removed in a drag tank. Wastewater from the drag tank flows to a settling basin, where it is pumped as needed to the dust collectors and sand washing equipment. Problems were encountered with the 100 percent recycle system immediately after closing the loop. These problems were: (1) the determination of the correct amount of polymer addition required for optimum settling took a number of weeks; (2) during this transition period plugging of the scrubbers occurred; and (3) a larger than normal amount of solids collected in the settling basin. However, after the correct amount of polymer addition was determined and the proper water balance was achieved throughout the system, these problems were eliminated. In an effort to confirm the status of 100 percent recycle systems, the Agency contacted Plant 51115 in 1983. Plant 51115 indicated that recycle of dust collection scrubber water had been discontinued and dust collection scrubber wastewater was now discharged to a surface water after settling in a drag tank. No reason for the change in recycle status was given.

Plant 53642, Figure V-35, has a scrubber system for the cleaning of dusts collected in the molding, core room, pouring, cooling, and cleaning areas (sample point 6). The process wastewater flows to a primary settling tank and then is pumped to a cyclone separator. The cyclone underflow flows to a classifier for dewatering and removal of solids, with the settled wastewaters being returned to the primary settling tank. The upflow from the cyclones goes to a second tank for recycle, with a blowdown (10 percent) to a thickener. Alum and polymer are added at the thickener. The underflow goes to a vacuum filter. The filter cake goes to a landfill, and the filtrate is returned to the thickener. The thickener overflow is reused or discharged to a surface water.

Plant 59101, Figure V-45, has a series of 12 bulk bed washer type scrubbers in the foundry for the cleaning of molding and cleaning dusts. These package scrubber units make use of internal recycle. The process wastewater from these units (sample point 3) is pumped to a collection sump and then to a lagoon. Overflow from the lagoon is discharged to a surface water.

Grinding Scrubber

Grinding scrubber wastewater originates from the removal of grinding dust from air in a scrubber, when water or process wastewater is used as a cleaning medium. Grinding dust is generated during the mechanical abrading, or preliminary grinding of castings following removal from the mold.

An estimated 1,897 million gallons of process wastewater are generated each year by ferrous grinding scrubber processes that discharge wastewater. This represents 2.8 percent of the total raw process wastewater generated by discharging facilities within

the ferrous subcategory. Fifty-three percent of ferrous grinding scrubber wastewater discharged is discharged to navigable waters, while 47 percent is discharged to POTW's. Twelve plants with this process segment practice recycle and supplied sufficient information to calculate a recycle rate. These recycle rates ranged from 50 percent to 100 percent. The applied flow rates for this process segment are summarized in Table V-18, and range from 0.006 gal/1,000 SCF to 78.26 gal/1,000 SCF.

Sixteen of the 25 facilities with this process segment report having wastewater treatment currently in-place. Four plants use oil removal technology, two plants have chemical addition, 16 plants have settling devices, and three plants have filters.

Raw wastewater sampling data that characterize ferrous grinding scrubber wastewater are not available. All data used to characterize ferrous grinding scrubber wastewater have been transferred from the magnesium grinding scrubber segment. Both of these segments generate wastewater from the wet scrubbing of grinding dusts generated by processing a non-toxic metal (i.e., iron and magnesium) casting, using similar technology and equipment. Therefore, wastewaters from both segments should contain similar levels of toxic metals, organics, conventional, and nonconventional pollutants.

Investment Casting

Investment casting wastewater is generated during investment mold backup, hydroblast cleaning of investment castings, and the collection of dust resulting from the hydroblasting of castings and the handling of the investment material. Operations generating investment casting wastewaters are sometimes called lost wax, lost pattern, hot investment, or precision casting processes.

An estimated 2.3 million gallons of process wastewater are generated each year by ferrous investment casting processes that discharge wastewater. This represents 0.003 percent of the total raw process wastewater generated by discharging facilities within the ferrous subcategory. None of the ferrous investment casting wastewater discharged is discharged to navigable waters, while 100 percent is discharged to POTW's. No plant that practices recycle of ferrous grinding scrubber water was identified. The applied flow rates for this process segment are summarized in Table V-6, and range from 3,000 gal/ton to 68,550 gal/ton. As discussed in Section IX, aluminum, copper, and ferrous investment casting applied flow rates are considered together because half of the investment casting plants surveyed cast all three metals using the same or similar equipment.

No facility with this process segment reports having any wastewater treatment currently in-place.

Raw wastewater sampling data that characterize ferrous investment casting wastewater are not available. All data used to

characterize ferrous investment casting wastewater have been transferred from the aluminum investment casting segment. Both of these segments generate wastewater during investment mold backup, hydroblast cleaning of investment castings, and the collection of dust resulting from the hydroblasting of castings and the handling of the investment material. Many plants conduct both ferrous and aluminum (both non-toxic metals) investment casting using the same or similar technology and equipment. Therefore, wastewaters from both segments should contain similar levels of toxic metals, organics, conventional, and nonconventional pollutants.

Melting Furnace Scrubber

An estimated 18,136 million gallons of process wastewater are generated each year by ferrous melting furnace scrubber processes that discharge wastewater. This represents 26.3 percent of the total raw process wastewater generated by discharging facilities within the ferrous subcategory. Fifty-one percent of ferrous melting furnace scrubber wastewater discharged is discharged to navigable waters, while 49 percent is discharged to POTW's. Eighty-six plants with this process segment practice recycle and supplied sufficient information to calculate a recycle rate. These recycle rates ranged from 40 percent to 100 percent. The applied flow rates for this process segment are summarized in Table V-19, and range from 1 gal/1,000 SCF to 125 gal/1,000 SCF.

Seventy-eight of 119 facilities with this process segment report having wastewater treatment currently in-place. One plant reports using a cooling tower, 10 plants have oil removal technology, 29 plants employ chemical neutralization, 63 plants use settling devices, four plants employ filters, and one plant uses evaporation.

A general process and water flow diagram of a representative ferrous melting furnace scrubber operation is presented in Figure III-5. Melting furnace scrubber wastewater is generated during the removal of dust and fumes from furnace exhaust gases in a scrubber, when water or process wastewater is used as a cleaning medium. The dust and fumes are generated by melting or holding furnace operations and are expelled in the exhaust gases from these operations. Wastewater from pouring floor, pouring ladle, and transfer ladle fume scrubbing is also included when the fumes from those operations are collected with the melting or holding furnace fumes in a common air duct system.

Raw wastewater sampling was performed at six facilities to characterize ferrous melting furnace scrubber process wastewater. This raw wastewater data is summarized in Table V-40. Melting furnace scrubber water is characterized by toxic organic and metal pollutants, oil and grease, phenols, and suspended solids.

Plant 06956, Figure V-17, generates wastewaters from dust collection (sample point J), melting furnace scrubber (sample point H), and slag quenching (sample point K) operations. These

wastewaters are combined for treatment. The wastewaters are first treated in a clarifier with polymer added to enhance solids removal and lime added to precipitate metals. The clarifier effluent flows to a lagoon from which a portion of the treated wastewaters are recycled to the processes listed above. The lagoon not only provides system holding capacity but also provides additional solids removal capability. Clarifier sludge is transported to a landfill disposal site. The overall recycle rate of this combined system is 95 percent; the remainder is discharged to a receiving stream.

Plant 09441, Figure V-12, a gray iron foundry, operates two melting furnace scrubbers. Wastewater from these two scrubbers are commingled (sample point B), settled in a tank with caustic addition, and recycled. Overflow from the settling tank is combined with other flows, including slag quench and dust collection scrubber water, settled in a pond, and then discharged.

Plant 17230, Figure V-20, has a cupola emissions control system which includes a wet cap, a Venturi scrubber, and a mist eliminator. Water from these three units is combined and samples were taken of this combined flow (sample point B). This water is recycled through a settling tank where sludge is removed.

Plant 50000, Figure V-27, has a Venturi scrubber and a cupola wet cap. Lake water is used first in the Venturi scrubber and then in the wet cap. A sample was taken of the water exiting the wet cap (sample point C). This water is further used in a slag quench operation, and then treated with chemical addition and clarification prior to surface water discharge.

Plant 55217, Figure V-38, generates process wastewaters from the melting furnace scrubber on a triplex cupola arrangement. The process wastewaters are collected in a slurry tank (sample point 2). Caustic is added, and the wastewater is pumped to a large lagoon that is shared with another plant. Since 1974, all process wastewater from the melting furnace scrubber has been recycled.

Plant 58589, Figure V-44, has a melting furnace scrubber process wastewater which is collected in a separator, and then pumped to a large sump (sample point 2). After settling overnight, the contents of the sump are siphoned to a second sump. Water from this second sump is recycled to the quench chamber scrubber the next day. This plant recycles all of its melting furnace process wastewaters. Solids are removed from the first sump on a bi-monthly basis.

Mold Cooling

Mold cooling wastewater originates from the direct spray cooling of a mold or die, or of the casting in an open mold. Water that circulates in a noncontact cooling water system in the interior of a mold is not considered mold cooling process wastewater

unless it leaks from the system and is commingled with other process wastewaters.

An estimated 1,435 million gallons of process wastewater are generated each year by ferrous mold cooling processes that discharge wastewater. This represents 2.1 percent of the total raw process wastewater generated by discharging facilities within the ferrous subcategory. Eighty-three percent of ferrous mold cooling wastewater discharged is discharged to navigable waters, while 17 percent is discharged to POTW's. Seven plants with this process segment practice recycle and supplied sufficient information to calculate a recycle rate. These recycle rates ranged from 14 percent to 100 percent. The applied flow rates for this process segment are summarized in Table V-20, and range from 55 gal/ton to 9,434 gal/ton.

Thirteen of 14 facilities with this process segment report having wastewater treatment currently in-place. Two plants have cooling towers, four have oil removal technology, six have chemical addition, and nine have settling devices.

Raw wastewater sampling was performed at one facility to characterize ferrous mold cooling process wastewater. This raw wastewater data is summarized in Table V-41.

Wastewater samples from this plant were not analyzed for toxic organic pollutants. All organics data for the ferrous mold cooling process segment have been transferred from the ferrous casting quench process segment. Both of these segments generate wastewater from the contact cooling of metallic mold and casting surfaces at ferrous metal molding and casting plants. Data available for other pollutants indicate that ferrous mold cooling and casting quench wastewater have similar characteristics. Therefore, wastewaters from both segments should contain similar levels of toxic organic pollutants.

Plant 51026, Figure V-29, generates casting quench, mold cooling (sample points 3 and 6), slag quench, dust collection, and sand washing wastewaters which are drained to a series of lagoons, and after 84 hours retention time are discharged to a surface water. The first lagoon in the series is periodically dredged, and the sludge is trucked to a nearby landfill. During this clean-out operation, the flow is diverted to a duplicate lagoon.

Slag Quench

Figure III-5 presents a general process and water flow diagram of a representative ferrous slag quenching operation. In this operation, the slag removed during the melting operation is quenched in water in order to cool and thus solidify the slag. The quenched slag is subsequently removed for disposal or reuse in other applications.

An estimated 8,336 million gallons of process wastewater are generated each year by ferrous slag quench processes that

discharge wastewater. This represents 12.1 percent of the total raw process wastewater generated by discharging facilities within the ferrous subcategory. Fifty-nine percent of ferrous slag quench wastewater discharged is discharged to navigable waters, while 41 percent is discharged to POTW's. Fifty-two plants with this process segment practice recycle and supplied sufficient information to calculate a recycle rate. These recycle rates ranged from 25 percent to 100 percent. The applied flow rates for this process segment are summarized in Table V-21, and range from 2.4 gal/ton to 64,000 gal/ton.

Sixty-two of 89 facilities with this process segment report having wastewater treatment currently in-place. Three plants have cooling towers, 10 plants use oil removal technology, nine plants practice chemical addition, 60 plants employ settling devices, three plants use filters, and one plant uses evaporation.

Raw wastewater sampling was performed at five facilities to characterize ferrous slag quench process wastewater. This raw wastewater data is summarized in Table V-42. Slag quench water is characterized by treatable concentrations of toxic organic and metal pollutants, oil and grease, and suspended solids.

Plant 06956, Figure V-7, generates wastewaters from dust collection (sample point J), melting furnace scrubber (sample point H), and slag quenching (sample point K) operations. These wastewaters are combined for treatment. The wastewaters are first treated in a clarifier with polymer added to enhance solids removal and lime added for pH control. The clarifier effluent flows to a lagoon from which a portion of the treated wastewaters are recycled to the processes listed above. The lagoon not only provides system holding capacity but also provides additional solids removal capability. Clarifier sludge is transported to a landfill disposal site. The overall recycle rate of this combined system is 95 percent; the remainder is discharged to a receiving stream.

Plant 09441, Figure V-12, generates slag quench wastewater (sample point D), along with dust collection scrubber, melting furnace scrubber, and noncontact cooling waters. These waters are combined and treated in a settling pond prior to discharge.

Plant 51026, Figure V-29, generates slag quench (sample point 7), mold cooling, casting quench, dust collection scrubber, and sand washing process wastewaters which are drained to a series of lagoons, and after 84 hours retention time are discharged to a surface water. The first lagoon in the series is periodically dredged with the sludge trucked to a nearby landfill. During this clean-out operation, the flow is diverted to a duplicate lagoon.

Plant 55217, Figure V-38, applies water to the slag discharge of a cupola. These wastewaters convey the solidified slag to a slag quench pit (sample point 3), where a conveyor mechanism removes

the slag. The slag is transported to a disposal site. Slag quenching wastewaters are recycled, at a rate of 95 percent, from the pit to the process. The discharge from this quenching process is delivered to a large lagoon which is shared with plant 50315. Since 1974, all process wastewater has been recycled.

Plant 56123, Figure V-39, has a slag quench pit, from which slag quench water is discharged (sample point 2) to a separation sump. From this sump, water is discharged to a sanitary sewer.

Wet Sand Reclamation

A general process and water flow diagram of a representative sand washing and reclamation system is presented in Figure III-5.

In this operation, wastewaters are generated as a result of using water to wash used casting sand. The waters are used to remove impurities, primarily "spent" binders and sand, from the casting sand prior to its reuse in the molding processes. The sand and binders become "spent" as a result of the heat present in the casting process.

An estimated 4,113 million gallons of process wastewater are generated each year by ferrous wet sand reclamation processes that discharge wastewater. This represents 6 percent of the total raw process wastewater generated by discharging facilities within the ferrous subcategory. Sixty percent of ferrous wet sand reclamation wastewater discharged is discharged to navigable waters, while 40 percent is discharged to POTW's. Six plants with this process segment practice recycle and supplied sufficient information to calculate a recycle rate. These recycle rates ranged from 30 percent to 99 percent. The applied flow rates for this process segment are summarized in Table V-22, and range from 59.8 gal/ton to 3,085 gal/ton.

Thirteen of 16 facilities with this process segment report having wastewater treatment currently in-place. Two plants employ oil removal devices, and all 13 plants use settling devices.

Raw wastewater sampling was performed at seven facilities to characterize ferrous wet sand reclamation process wastewater. This raw wastewater data is summarized in Table V-43. Wet sand reclamation water is characterized by treatable concentrations of toxic organic and metal pollutants, oil and grease, phenols, and suspended solids.

Plant 15520, Figure V-17, generates sand washing process wastewaters (sample points J and K), dust collection scrubber process wastewaters, and slag quench process wastewaters which are settled and recycled. Makeup water is from noncontact cooling water. Overflow is discharged to a POTW.

Plant 20007, Figure V-23, has a sand washing operation. Samples were taken of this water (sample point D) following commingling with dust collection scrubber water. This stream is treated by

flocculation and clarification prior to POTW discharge.

Plant 20009, Figure V-24, operates a sand reclamation process. The sand washing process wastewater (sample point B) is settled in a series of four lagoons. Sixty percent of the process wastewater is recycled, while 40 percent is discharged by overflow to a POTW.

Plant 51026, Figure V-29, generates sand washing (sample point 2), mold cooling, casting quench, slag quench, and dust collection scrubber process wastewaters which are drained to a series of lagoons, and after 84 hours retention time are discharged to a surface water. The first lagoon in the series is periodically dredged with the sludge being trucked to a nearby landfill. During this clean-out operation, the flow is diverted to a duplicate lagoon.

At the time of sampling, Plant 51115, Figure V-30, generated dust collection and sand washing wastewaters (sample point 2) which were collected, treated with flocculants and sent to a drag tank. The sludge from this settling operation was hauled to a landfill; the overflow water was drained to a settling pond for additional settling. Overflow from the settling basin flowed to a wet well. This overflow water was then pumped to a tank, where it was pumped (as needed) to the dust collectors and the sand washing equipment. This was a complete recycle system. In an effort to confirm 100 percent recycle systems conducted in 1983, EPA contacted plant 51115. At that time, plant 51115 indicated that wet sand reclamation operations had been discontinued.

Plant 51473, Figure V-31, has a sand washing process. The sand from shakeout is conveyed to a screen. A magnetic separator removes all metallic particles from the sand. The screen oversize (3/8 in.) goes to a mixer vessel where city water is added. This is thoroughly agitated and then pumped to a slurry tank. The slurry tank meters the mix to a dewater table, where the solids are transported by screw conveyor to a rotary dryer. The underflow from the dewater table is pumped to a settling tank (sample point 2). The settling tank is cleaned out weekly, and the solids are removed to landfill. The treated effluent is discharged to a receiving stream.

Plant 59101, Figure V-45, has a sand washing system to reclaim sand for reuse. The process wastewater from this operation (sample point 2) flows to lagoons. The lagoons are arranged to give maximum use of the land area. The inlet to the first lagoon is arranged so that the heavy solids can be removed readily. The lagoon overflow is discharged to a surface water.

Magnesium Subcategory

An estimated 2.65 million gallons of raw process wastewater are generated each year by discharging facilities in the magnesium subcategory. Seven percent of this wastewater is generated by facilities discharging to navigable waters, and 93 percent is

generated by facilities discharging to POTW's. Plants in the magnesium subcategory account for approximately 0.003 percent of the raw wastewater generated by plants in the metal molding and casting industry.

Casting Quench

Casting quench wastewater originates from the immersion of a hot casting in a water bath to rapidly cool the casting, or to change the metallurgical properties of the casting.

An estimated 0.181 million gallons of process wastewater are generated each year by magnesium casting quench processes that discharge wastewater. This represents 6.8 percent of the total raw process wastewater generated by discharging facilities within the magnesium subcategory. One hundred percent of the magnesium casting quench wastewater discharged is discharged to navigable waters, while none is discharged to POTW's. No plant with this process segment that practices recycle has been identified. The applied flow rates for this process segment are summarized in Table V-23. No plant reported sufficient information to calculate an applied flow rate. Applied flow rate data for the magnesium casting quench segment has been transferred from the zinc casting quench segment.

No facility with this process segment reports having any wastewater treatment currently in-place.

Raw wastewater sampling data that characterize magnesium casting quench wastewater are not available. All data used to characterize magnesium casting quench wastewater have been transferred from the aluminum casting quench segment. Both of these segments generate wastewater from the quenching of non-toxic metal (i.e., aluminum and magnesium) castings, using similar techniques and equipment. Data available for the aluminum, copper, and ferrous subcategories indicate that the pollutant load in casting quench wastewater from different subcategories is similar. Therefore, wastewaters from the aluminum and magnesium casting quench segment should contain similar levels of toxic metals, organics, conventional, and nonconventional pollutants.

Dust Collection Scrubber

A general process and water flow diagram of a typical magnesium dust collection scrubber system is presented in Figure III-6. Dust collection scrubber wastewater originates from the removal of dust from air in a scrubber when water or process water is used as a cleaning medium. The dust may originate with sand preparation, sand molding, core making, sand handling and transfer, the removal of sand from the casting (including shake-out and shot-blasting), or other dust sources on the foundry floor. Wastewater that originates from core and mold making fume scrubbing is also included in dust collection scrubbing, except when such fumes are cleaned in a separate scrubbing device

dedicated to the core and mold making fumes, and the resulting wastewater is then contract hauled or sent to a reclaimer.

An estimated 1.24 million gallons of process wastewater are generated each year by magnesium dust collection scrubber processes that discharge wastewater. This represents 46.6 percent of the total raw process wastewater generated by discharging facilities within the magnesium subcategory. None of this wastewater quantity is discharged to navigable waters, while 100 percent of the magnesium dust collection wastewater discharged is discharged to POTW's. No plant with this process segment that practices recycle was identified. The applied flow rates for this process segment are summarized in Table V-24, and range from 0.05 gal/1,000 SCF to 0.5 gal/1,000 SCF.

No facility with this process segment reports having any wastewater treatment currently in-place.

Raw wastewater sampling data that characterize magnesium dust collection wastewater are not available. All data used to characterize magnesium dust collection scrubber wastewater have been transferred from the magnesium grinding scrubber process segment. Both of these segments generate wastewater as a result of wet scrubbing of dusts generated during magnesium casting operations. Therefore, wastewaters from both segments should contain similar levels of toxic metals, organics, conventional, and nonconventional pollutants.

Grinding Scrubber

Figure III-6 presents a general process and water flow diagram of a representative magnesium grinding scrubber operation. Scrubbers are provided on grinding systems in order to remove particulate magnesium generated as a result of the grinding operation. The scrubbing process not only serves to remove the particulate magnesium as an airborne contaminant, but also reduces the fire hazards which can result from an accumulation of fine magnesium particles.

An estimated 1.24 million gallons of process wastewater are generated each year by magnesium grinding scrubber processes that discharge wastewater. This represents 46.6 percent of the total raw process wastewater generated by discharging facilities within the magnesium subcategory. None of this wastewater quantity is discharged to navigable waters, while 100 percent of the magnesium grinding scrubber wastewater discharged is discharged to POTW's. Two plants with this process segment practice recycle and supplied sufficient information to calculate a recycle rate. These recycle rates ranged from 97 percent to 100 percent. The applied flow rates for this process segment are summarized in Table V-25. No plants reported sufficient information to calculate an applied flow rate for this process segment. Applied flow rate data for the magnesium grinding scrubber segment have been transferred from the magnesium dust collection scrubber segment.

No facility with this process segment reports having any waste water treatment currently in-place.

Raw wastewater sampling was performed at one facility to characterize magnesium grinding scrubber process wastewater. This raw wastewater data is summarized in Table V-44. Grinding scrubber water is characterized by toxic organic and metal pollutants, oil and grease, and suspended solids.

Plant 08146, Figure V-10, employs a magnesium dust collection scrubber and a magnesium grinding scrubber (sample point B). The process wastewaters from these scrubbers are discharged untreated to a surface water.

Zinc Subcategory

An estimated 0.775 billion gallons of raw process wastewater are generated each year by discharging facilities in the zinc subcategory. Thirty-two percent of this wastewater is generated by facilities discharging to navigable waters, and 68 percent is generated by facilities discharging to POTW's. Plants in the zinc subcategory account for approximately 1 percent of the raw wastewater generated by plants in the metal molding and casting industry.

Casting Quench

A general process and water flow diagram of a representative zinc casting quench operation is presented in Figure III-7. The process wastewater considered in this operation is that which is discharged from the casting quench tanks.

An estimated 256 million gallons of process wastewater are generated each year by zinc casting quench processes that discharge wastewater. This represents 33.1 percent of the total raw process wastewater generated by discharging facilities within the zinc subcategory. Thirty-five percent of the zinc casting quench wastewater discharged is discharged to navigable waters, while 65 percent is discharged to POTW's. Nine plants with this process segment practice recycle and supplied sufficient information to calculate a recycle rate. These recycle rates ranged from 33 percent to 100 percent. The applied flow rates for this process segment are summarized in Table V-26, and range from 5.5 gal/ton to 40,632 gal/ton.

Eleven of 32 facilities with this process segment report having wastewater treatment currently in-place. One plant uses a cooling tower, three plants practice emulsion breaking, seven plants treat to remove oil and grease, seven plants practice chemical addition, and two plants practice filtration.

Raw wastewater sampling was performed at two facilities to characterize zinc casting quench process wastewater. This raw wastewater data is summarized in Table V-45. Casting quench water is characterized by treatable concentrations of toxic

organic and metal pollutants, oil and grease, and suspended solids.

Plant 10308, Figure V-13, has a zinc casting quench operation (sample point B). Quench water is commingled with aluminum casting quench water and other wastewater streams in a wet well. Water from this well is treated with oil skimming, chemical addition, and sedimentation prior to discharge to a land-locked swamp.

Plant 18139, Figure V-21, has a number of die casting machines and associated quench tanks (zinc casting quench is sample point D) which are emptied on a scheduled basis. The schedule results in the emptying of one 1,135.5 liter (300 gallon) quench tank each operational day. Each quench tank is emptied about once a month. The quench tank discharge mixes with melting furnace scrubber process wastewater, aluminum casting quench tank discharges, and other non-foundry discharges prior to settling and skimming. The treated process wastewaters are discharged to a POTW. The zinc quench process wastewater makes up 0.2 percent of the total flow.

Die Casting

Die casting wastewater includes two types of wastewater discharges: leakage of hydraulic fluid from hydraulic systems associated with die casting operations, and the discharge of die lubricants. Any process water used for the cooling of dies or castings still contained in dies is not considered die casting wastewater; rather, it is mold cooling wastewater.

An estimated 9.89 million gallons of process wastewater is generated each year by zinc die casting processes that discharge wastewater. This represents 1.3 percent of the total raw process wastewater generated by discharging facilities within the zinc subcategory. Thirty-four percent of zinc die casting wastewater discharged is discharged to navigable waters, while 66 percent is discharged to POTW's. Two plants with this process segment practice recycle and supplied sufficient information to calculate a recycle rate. These recycle rates ranged from 83 percent to 100 percent. The applied flow rates for this process segment are summarized in Table V-27, and range from 3.33 gal/ton to 41.4 gal/ton.

Eight of 20 facilities with this process segment report having wastewater treatment currently in-place. Two plants use chromium reduction, three plants use emulsion breaking, six plants remove oils, five plants practice chemical addition, one plant has a deep bed filter, and six plants employ settling devices.

Raw wastewater sampling was performed at two facilities to characterize zinc die casting process wastewater. This raw wastewater data is summarized in Table V-46. Die casting water is characterized by toxic organic and metal pollutants, oil and grease, phenols, and suspended solids.

Plant 04622, Figure V-3, generates die casting process wastewater (sample point B) which is hauled away on a contract basis by a reprocessor.

Plant 12040, Figure V-15, has a zinc die casting operation. Effluent from this operation was sampled (sample point C) prior to being combined with aluminum die casting effluent in a receiving tank. Oil is removed in this tank, and the effluent is then pumped to a batch treatment system that consists of chemical emulsion breaking and lime and settle treatment.

Melting Furnace Scrubber

Melting furnace scrubber wastewater is generated during the removal of dust and fumes from furnace exhaust gases in a scrub ber, when water or process wastewater is used as a cleaning medium. The dust and fumes are generated by melting or holding furnace operations and are expelled in the exhaust gases from these operations. Wastewater from pouring floor, pouring ladle, and transfer ladle fume scrubbing is also included when the fumes from those operations are collected in an air duct system common with the melting or holding furnace fumes.

A general process and water flow diagram of a representative zinc melting furnace scrubber operation is presented in Figure III-7. The process wastewater from these scrubbers may be either recirculated within the scrubber equipment package (which includes a settling chamber) or may flow to an external treatment system and then be recycled back to the scrubber.

An estimated 447 million gallons of process wastewater are generated each year by zinc melting furnace scrubber processes that discharge wastewater. This represents 57.7 percent of the total raw process wastewater generated by discharging facilities within the zinc subcategory. Twenty-three percent of zinc melting furnace wastewater discharged is discharged to navigable waters, while 77 percent is discharged to POTW's. Seven plants with this process segment practice recycle and supplied sufficient information to calculate a recycle rate. These plants reported recycle rates ranging from 69 to 99.8 percent. The applied flow rates for this process segment are summarized in Table V-28, and range from 0.24 gal/1,000 SCF to 24 gal/1,000 SCF.

Five facilities with this process report having wastewater treatment currently in-place. Four plants have emulsion breaking, two plants practice oil removal, five plants employ caustic addition, five plants use settling devices, one plant has a vacuum filter, and one plant has a pressure filter.

Representative raw wastewater sampling data that characterize zinc melting furnace scrubber wastewater are not available. Data available for the zinc melting furnace scrubber at plant 18139 had extremely high concentrations of total phenol and oil and

grease. Oil and grease concentrations ranged from 646 mg/l to 885 mg/l; total phenol ranged from 49.3 mg/l to 123 mg/l. Based on a review of available data on melting furnace scrubbers in other subcategories, such concentrations are uncharacteristic of scrubber wastewaters. Therefore, all data used to characterize zinc melting furnace scrubber wastewater have been transferred from the ferrous melting furnace scrubber segment. Both of these segments generate wastewater from the wet scrubbing of melting furnace exhaust gases. The raw waste data for the ferrous melting furnace scrubber segment show high levels of zinc, as well as levels of other toxic organic, conventional, and nonconventional pollutants that would be expected in zinc melting furnace scrubber wastewater.

Mold Cooling

Mold cooling wastewater originates from the direct spray cooling of a mold or die, or of the casting, in an open mold. Water that circulates in a noncontact cooling water system in the interior of a mold is not considered mold cooling process wastewater unless it leaks from the system and is commingled with other process wastewaters.

An estimated 61.7 million gallons of process wastewater are generated each year by zinc mold cooling processes that discharge wastewater. This represents 7.9 percent of the total raw process wastewater generated by discharging facilities within the zinc subcategory. Eighty percent of zinc mold cooling wastewater discharged is discharged to navigable waters, while 20 percent is discharged to POTW's. Four plants with this process segment practice recycle and supplied sufficient information to calculate a recycle rate. These recycle rates ranged from 95 percent to 100 percent. The applied flow rates for this process segment are summarized in Table V-29, and range from 42.7 gal/ton to 4,860 gal/ton.

Three of 10 facilities with this process segment report having wastewater treatment currently in-place. Plant 01334 employs primary settling, plant 01707 has a cooling tower; and plant 10640 has a treatment scheme that includes emulsion breaking, chemical addition, flocculation, and clarification.

Raw wastewater sampling data that characterize zinc mold cooling wastewater are not available. All data used to characterize zinc mold cooling wastewater have been transferred from the zinc casting quench segment. Both of these segments generate waste water from the contact cooling of metallic mold or casting surfaces. Data available for the ferrous subcategory indicate that mold cooling and casting quench wastewaters have similar characteristics. Therefore, wastewaters from the zinc mold cooling and casting quench segments should contain similar levels of toxic metals, organics, conventional, and nonconventional pollutants.

Table V-1

APPLIED FLOW RATES FOR
ALUMINUM CASTING CLEANING

Plant Code	Applied Flow Rate (gallons/ton)
12040	14,270
07280	480
47992	183

Table V-2

APPLIED FLOW RATES FOR
ALUMINUM CASTING QUENCH

Plant Code	Applied Flow Rate (gallons/ton)
10615	6,866
15265	3,543
11703	2,408
87799	1,975
12040	1,054
81703	757
04809	700
17089	581
14924	232
87598	159.7
07879	147
26767	145
14401	99.3
04675	56
00206	42.5
82200	38.5
25025	38.1
25023	32.4
19405	19
85120	14.6
87599	6.31
82118	1.65
14789	1.45
02869	NA
02905	NA
04747	NA
06900	NA
13978	NA
18126	NA
20023	NA
82117	NA
87561	NA
89920	NA

NA - Data not reported.

Table V-3

APPLIED FLOW RATES FOR
ALUMINUM DIE CASTING

Plant Code	Applied Flow Rate (gallons/ton)
19405	600
89100	441
15265	361
03185	171.4
82100	119.5
82000	96.5
05878	85
81703	70
07138	70
80100	50
85120	49
20147	44.9
20114	44.9
82117	40
04675	37.8
80119	31.1
80597	31.0
82200	16.9
82118	10
19275	8.7
12040	4.05
87799	2.1
18139	NA

NA - Data not reported.

Table V-4

APPLIED FLOW RATES FOR
ALUMINUM DUST COLLECTION SCRUBBER

Plant Code	Applied Flow Rate (gallons/1000 SCF)
12040	10.4
19275	5.56
19275	5.56
19275	5.13
19275	5.1
19275	3.08
25025	2.5
17089	2.0
17089	2.0
17089	2.0
00206	1.82
20063	1.78
00206	1.5
00206	1.25
22121	0.3
20063	0.25
04704	0.1
22121	0.1
22121	0.08
22121	0.08
74992	0.06
20223	0.03
20223	0.03
05167	NA
07098	NA
14789	NA

NA - Data not reported.

Table V-5

APPLIED FLOW RATES FOR
ALUMINUM GRINDING SCRUBBER

Plant Code	Applied Flow Rate (gallons/1000 SCF)
11703	1.75
74992	0.063
04704	0.033

Table V-6

APPLIED FLOW RATES FOR
ALUMINUM, COPPER, AND FERROUS
INVESTMENT CASTING

Plant Code	Applied Flow Rate (gallons/ton)	Metal Cast
04704	68,550	Al - 80% Cu - 15% Fe - 5%
05206	20,800	Al - 100%
20063	14,400	Al - 100%
01994	3,000	Al - 25% Cu - 20% Fe - 55%

Table V-7

APPLIED FLOW RATES FOR
ALUMINUM MELTING FURNACE SCRUBBER

Plant Code	Applied Flow Rate (gallons/1,000 SCF)
13562	12
13562	12
13562	12
17089	11.73
17089	11.73
17089	11.73
22121	11.73
20063	5
22121	0.43
12040	NA
20023	NA
20114	NA

NA - Data not reported.

Table V-8

APPLIED FLOW RATES FOR
ALUMINUM MOLD COOLING

Plant Code	Applied Flow Rate (gallons/ton)
07138	202,300
04675	33,800
13562	14,460
20223	12,000
12040	10,940
87799	3,950
10615	2,860
87599	1,850
14401	1,655
19405	1,300
15265	723
19275	609
11665	506
85120	159
20063	103.2
06925	(1)
11703	NA
20023	NA

(1) Cannot separate die casting and mold cooling water.

NA - Data not reported.

Table V-9

APPLIED FLOW RATES FOR
COPPER CASTING QUENCH

Plant Code	Applied Flow Rate (gallons/ton)
16446	26,470
25004	20,731
25015	5,882
09125	3,859
04951	2,300
38846	1,120
12322	817
25013	610.3
25009	496
25007	460
25011	364
11740	140
20078	140
04184	100
06809	90.2
03525	60.3
25003	16.7
04851	8.93
19484	NA
20067	NA
40011	NA

NA - Data not reported.

Table V-10

APPLIED FLOW RATES FOR
COPPER DIRECT CHILL CASTING

Plant Code	Applied Flow Rate (gallons/ton)
20017	9,617
80091	7,007
80029	5,783
20066	3,130
80030	2,858
80079	NA
06809	NA
09979	NA

NA - Data not reported.

Table V-11

APPLIED FLOW RATES FOR
COPPER DUST COLLECTION SCRUBBER

Plant Code	Applied Flow Rate (gallons/1,000 SCF)
05934	11
09094	5
09094	5
09094	4.64
38840	4.29
40011	3.45
04851	0.09
12322	0.06
05946	0.03
03588	NA
15107	NA
19872	NA
31744	NA

NA - Data not reported.

Table V-12

APPLIED FLOW RATES FOR
COPPER GRINDING SCRUBBER

Plant Code	Applied Flow Rate (gallons/1,000 SCF)
04851	0.111
05934	NA
09094	NA
15382	NA
32543	NA
37947	NA

NA - Data not reported.

Table V-13

APPLIED FLOW RATES FOR
COPPER MELTING FURNACE SCRUBBER

Plant Code	Applied Flow Rate (gallons/1,000 SCF)
03588	9.54
05934	7.04
25005	0.81

Table V-14

APPLIED FLOW RATES FOR
COPPER MOLD COOLING

Plant Code	Applied Flow Rate (gallons/ton)
25007	12,817
25015	9,626
03525	7,352
20017	3,440
08951	1,458
25013	1,085
06809	395
08554	16.7
04736	NA
25001	NA
25004	NA
20067	NA

NA - Data not reported.

Table V-15

APPLIED FLOW RATES FOR
FERROUS CASTING CLEANING

Plant Code	Applied Flow Rate (gallons/ton)
80770	4,831
[illegible]340	4,453
02799	2,703
06999	2,410
08285	1,519
10865	1,403
04033	1,088
20699	213
19933	199
09929	91.6
10837	9.67
17348	5.71
05658	4
05622	0.81
03118	0.14
19733	NA

NA - Data not reported.

Table V-16

APPLIED FLOW RATES FOR
FERROUS CASTING QUENCH

Plant Code	Applied Flow Rate (gallons/ton)
11643	8,229
24566	5,818
86666	5,620
07882	5,505
15654	4,444
86119	4,132
05560	4,000
20011	2,237
08768	1,889
08223	1,600
20002	1,493
28634	1,391
83812	1,321
20000	1,320
20719	1,219
58589	1,200
00388	1,171
20003	1,170
19999	1,152
20007	1,098
13578	1,013
21175	884
18990	870
10388	583
07472	559
05691	553
19733	297.8
01665	291
15573	270
07024	256
14444	201
16502	157
11598	145
03901	144
08868	133
07898	125
80770	124
14761	110.3
06123	108
16934	52
04265	42.7

Table V-16 (Continued)

APPLIED FLOW RATES FOR
FERROUS CASTING QUENCH

Plant Code	Applied Flow Rate (gallons/ton)
17015	40.33
01834	15.3
17017	11.4
09024	7.11
02495	4
09035	3.6
04621	0.13
02365	NA
04073	NA
05929	NA
06937	NA
09151	NA
10225	NA
11245	NA
12203	NA
14173	NA
15104	NA
15555	NA
20009	NA
20408	NA
87565	NA

NA - Data not reported.

Table V-17

APPLIED FLOW RATES FOR
FERROUS DUST COLLECTION SCRUBBER

Plant Code	Applied Flow Rate (gallons/1,000 SCF)	Plant Code	Applied Flow Rate (gallons/1,000 SCF)	Plant Code	Applied Flow Rate (gallons/1,000 SCF)
05622	105	06956	6.25	09706	5.5
01801	50	16612	6.16	17380	5.49
01801	50	16612	6.12	27743	5.4
01801	50	03878	6	27743	5.4
09035	33	06956	6	09706	5.3
17018	28	06956	6	09706	5.3
07929	27	06956	6	38842	5.3
11964	24.5	18073	6	53772	5.28
03313	23.3	18073	6	53772	5.28
03313	23.3	18073	6	27500	5.2
08016	20.8	18073	6	27743	5.2
04621	17.7	18073	6	03313	5.14
04621	17.7	18073	6	12393	5.14
07228	15.2	06999	5.95	14104	5.14
00839	15	17380	5.89	16612	5.1
28822	14.3	18073	5.8	38842	5.1
03901	11.5	18073	5.8	02031	5
03313	10.8	18073	5.8	03588	5
94412	10	18073	5.8	03854	5
94412	10	18073	5.8	05640	5
01834	8.89	18073	5.8	05640	5
16612	8	18073	5.8	05640	5
27500	7.5	18073	5.8	05640	5
11245	7.2	18073	5.8	05640	5
04621	7.1	18073	5.8	05640	5
04621	7.1	18073	5.8	06956	5
04621	7.1	18073	5.8	07228	5
04621	7.1	18073	5.8	09706	5
04621	7.1	18073	5.8	12203	5
04621	7.1	18073	5.8	14069	5
04621	7.1	18073	5.8	14069	5
01756	7.06	38842	5.8	14670	5
17380	6.71	06956	5.77	15654	5
17380	6.71	17380	5.71	18073	5
07678	6.7	18797	5.71	18073	5
07678	6.7	18797	5.71	18073	5
07678	6.7	09706	5.7	18073	5
07678	6.7	09706	5.7	18797	5
06956	6.67	12203	5.7	23455	5
12393	6.67	06956	5.66	23455	5
16882	6.45	05417	5.6	38842	5
11111	6.3	11111	5.6	38842	5
11111	6.3	11111	5.6	38842	5
11111	6.3	06956	5.56	38842	5
11111	6.3	17380	5.56	63773	5
11111	6.3	09706	5.5	63773	5

Table V-17 (Continued)

APPLIED FLOW RATES FOR
FERROUS DUST COLLECTION SCRUBBER

Plant Code	Applied Flow Rate (gallons/1,000 SCF)	Plant Code	Applied Flow Rate (gallons/1,000 SCF)	Plant Code	Applied Flow Rate (gallons/1,000 SCF)
63773	5	63773	4.2	13416	4
63773	5	63773	4.2	13416	4
16882	4.99	63773	4.2	13416	4
17380	4.93	16612	4.17	13416	4
01756	4.88	01756	4.14	13416	4
16882	4.78	14069	4.14	13416	4
16882	4.78	19408	4.13	13416	4
16612	4.76	19408	4.05	13416	4
14069	4.73	13416	4	13416	4
28822	4.7	13416	4	13416	4
28822	4.7	13416	4	13416	4
28822	4.7	13416	4	13416	4
58823	4.7	13416	4	13416	4
07462	4.6	13416	4	13416	4
19733	4.6	13416	4	13416	4
38842	4.5	13416	4	13416	4
38842	4.5	13416	4	13416	4
18797	4.44	13416	4	13416	4
03854	4.4	13416	4	16612	4
03854	4.4	13416	4	17380	4
27500	4.4	13416	4	18797	4
27500	4.4	13416	4	19408	4
38842	4.4	13416	4	19408	4
94412	4.4	13416	4	19408	4
15104	4.38	13416	4	19408	4
14104	4.36	13416	4	03313	3.97
19408	4.34	13416	4	17380	3.9
19408	4.34	13416	4	19820	3.9
19408	4.34	13416	4	38842	3.9
18941	4.29	13416	4	38842	3.9
19408	4.29	13416	4	38842	3.9
19408	4.29	13416	4	15520	3.875
19408	4.29	13416	4	16882	3.79
16612	4.26	13416	4	15573	3.75
16882	4.26	13416	4	17289	3.71
12393	4.24	13416	4	19408	3.7
06124	4.2	13416	4	19408	3.7
63773	4.2	13416	4	19408	3.7
63773	4.2	13416	4	17380	3.68
63773	4.2	13416	4	15520	3.63

Table V-17 (Continued)

APPLIED FLOW RATES FOR
FERROUS DUST COLLECTION SCRUBBER

Plant Code	Applied Flow Rate (gallons/1,000 SCF)	Plant Code	Applied Flow Rate (gallons/1,000 SCF)	Plant Code	Applied Flow Rate (gallons/1,000 SCF)
18073	3.57	15520	3.5	19408	3.45
18073	3.52	15520	3.5	19408	3.45
18073	3.52	20408	3.5	19408	3.45
18073	3.52	15520	3.49	19408	3.45
18073	3.51	15520	3.49	16882	3.43
18073	3.51	15520	3.49	16882	3.43
18073	3.51	15520	3.49	16882	3.43
18073	3.51	15520	3.49	16882	3.41
18073	3.5	16612	3.49	16882	3.41
18073	3.5	16612	3.49	16882	3.41
18073	3.5	16612	3.49	16882	3.41
19733	3.5	16612	3.49	16882	3.41
38842	3.5	16612	3.49	07902	3.4
58823	3.5	16612	3.49	09035	3.4
58823	3.5	16612	3.49	16882	3.4
58823	3.6	16612	3.49	16882	3.4
06999	3.6	16612	3.49	16882	3.4
19408	3.6	16612	3.49	16882	3.4
19408	3.6	18073	3.49	16882	3.4
19408	3.6	18073	3.49	16882	3.4
19408	3.6	18073	3.49	16882	3.4
19408	3.6	18073	3.49	19733	3.4
19408	3.6	18073	3.49	16882	3.38
19408	3.6	18073	3.49	16882	3.38
19408	3.6	18073	3.49	16882	3.34
19408	3.6	18073	3.49	04073	3.33
19408	3.6	18073	3.49	04073	3.33
19408	3.6	18073	3.49	14173	3.33
19408	3.6	18073	3.49	16612	3.33
19408	3.6	18073	3.49	16612	3.33
19408	3.6	18073	3.49	16612	3.33
19408	3.57	18073	3.49	16612	3.33
14069	3.57	15520	3.48	16612	3.33
15520	3.57	15520	3.48	16612	3.33
15520	3.57	15520	3.47	16612	3.33
15520	3.57	15520	3.47	16612	3.33
15520	3.57	16612	3.45	16612	3.33
15520	3.57	16612	3.45	16612	3.33
16882	3.57	16612	3.45	16612	3.33
03588	3.57	16612	3.45	16612	3.33
07902	3.57	16612	3.45	19347	3.33
15520	3.57	16612	3.45	19347	3.33
15520	3.57	19408	3.45	19408	3.33
15520	3.57	19408	3.45	19408	3.33
15520	3.57	19408	3.45	19408	3.33
15520	3.57	19408	3.45	19408	3.33

Table V-17 (Continued)

APPLIED FLOW RATES FOR
FERROUS DUST COLLECTION SCRUBBER

Plant Code	Applied Flow Rate (gallons/1,000 SCF)	Plant Code	Applied Flow Rate (gallons/1,000 SCF)	Plant Code	Applied Flow Rate (gallons/1,000 SCF)
19408	3.33	19733	3.2	16882	3.03
19408	3.33	19733	3.2	17348	3.02
19408	3.33	19733	3.2	17348	3.01
19408	3.33	19733	3.2	01684	3
19408	3.33	19733	3.2	01834	3
19408	3.33	20009	3.2	01834	3
19408	3.33	27500	3.2	01834	3
19408	3.33	16612	3.19	04073	3
19408	3.33	16612	3.19	04073	3
19408	3.33	16612	3.19	04621	3
19408	3.33	16612	3.19	04621	3
19408	3.33	16612	3.19	04621	3
19408	3.33	16612	3.19	04621	3
16882	3.32	16612	3.19	04621	3
16882	3.32	16612	3.19	04621	3
16882	3.32	16612	3.19	04621	3
16882	3.32	14069	3.18	04621	3
17015	3.31	16882	3.17	04621	3
09706	3.3	16882	3.17	04621	3
16882	3.3	16882	3.17	04621	3
27500	3.3	08868	3.13	04621	3
16882	3.27	16612	3.13	04621	3
16882	3.26	16612	3.13	04621	3
03760	3.25	16612	3.13	04621	3
16882	3.23	16612	3.13	04621	3
16882	3.23	16612	3.13	04621	3
16882	3.23	16612	3.13	04621	3
16882	3.23	07902	3.1	04621	3
16882	3.23	09035	3.1	04621	3
16882	3.23	19733	3.1	04621	3
16882	3.23	19733	3.1	04621	3
16882	3.23	19733	3.1	04621	3
19408	3.21	20009	3.1	04621	3
19408	3.21	20009	3.1	04621	3
19408	3.21	38842	3.1	04621	3
19408	3.21	06977	3.08	04621	3
19408	3.21	16882	3.06	04621	3
05941	3.2	16882	3.06	04621	3
07228	3.2	16882	3.06	04621	3
19733	3.2	16882	3.06	04621	3
19733	3.2	17348	3.05	04621	3
19733	3.2	42344	3.05	04621	3
19733	3.2	17331	3.04	04621	3

Table V-17 (Continued)

APPLIED FLOW RATES FOR FERROUS DUST COLLECTION SCRUBBER

Plant Code	Applied Flow Rate (gallons/1,000 SCF)	Plant Code	Applied Flow Rate (gallons/1,000 SCF)	Plant Code	Applied Flow Rate (gallons/1,000 SCF)
04621	3	14809	3	17348	3
04621	3	14809	3	17348	3
04621	3	14809	3	17348	3
04621	3	14809	3	17348	3
04621	3	14809	3	17348	3
04621	3	14809	3	17348	3
04621	3	14809	3	17348	3
04621	3	14809	3	17348	3
04621	3	14809	3	17348	3
04621	3	14809	3	17348	3
04621	3	14809	3	17348	3
04621	3	14809	3	19347	3
04621	3	14809	3	27743	3
04621	3	14809	3	38842	3
04621	3	14809	3	38842	3
09148	3	14809	3	17348	2.99
09148	3	14809	3	16807	2.98
11964	3	14809	3	16807	2.98
12203	3	14809	3	17348	2.98
14069	3	14809	3	17348	2.98
14809	3	14809	3	17348	2.97
14809	3	14809	3	17348	2.96
14809	3	14809	3	17348	2.95
14809	3	14809	3	16612	2.94
14809	3	14809	3	16612	2.94
14809	3	14809	3	16612	2.93
14809	3	14809	3	16612	2.93
14809	3	14809	3	16612	2.93
14809	3	14809	3	16612	2.93
14809	3	14809	3	16882	2.92
14809	3	14809	3	16612	2.91
14809	3	14809	3	16612	2.91
14809	3	14809	3	16612	2.91
14809	3	14809	3	16612	2.91
14809	3	14809	3	16612	2.91
14809	3	14809	3	16612	2.91
14809	3	14809	3	16612	2.91
14809	3	14809	3	16612	2.91
14809	3	14809	3	16612	2.91
14809	3	14809	3	16612	2.91
14809	3	14809	3	16612	2.91
14809	3	14809	3	16612	2.91
14809	3	14809	3	16612	2.91
14809	3	14809	3	16882	2.91
14809	3	17348	3	03588	2.9
14809	3	17348	3	03760	2.9
14809	3	17348	3	05622	2.9
14809	3	17348	3	08944	2.9

Table V-17 (Continued)

APPLIED FLOW RATES FOR FERROUS DUST COLLECTION SCRUBBER

Plant Code	Applied Flow Rate (gallons/1,000 SCF)	Plant Code	Applied Flow Rate (gallons/1,000 SCF)	Plant Code	Applied Flow Rate (gallons/1,000 SCF)
09148	2.9	20784	2.5	10865	2.3
09148	2.9	20784	2.5	10865	2.3
23455	2.9	20784	2.5	10865	2.3
94412	2.9	20784	2.5	10865	2.3
94412	2.9	20784	2.5	10865	2.3
17380	2.87	20784	2.5	10865	2.3
16612	2.86	77775	2.5	10865	2.3
16612	2.86	77775	2.5	20007	2.3
16612	2.86	77775	2.5	01381	2.25
17331	2.81	77775	2.5	08482	2.25
17331	2.81	06999	2.48	17331	2.25
08944	2.8	06565	2.4	17331	2.25
16612	2.78	14069	2.4	20249	2.2
16612	2.78	00839	2.39	20249	2.2
16612	2.78	16612	2.35	20249	2.2
14069	2.71	01756	2.34	20249	2.2
07902	2.7	08482	2.31	20249	2.2
09035	2.7	05658	2.3	20249	2.2
11635	2.7	10865	2.3	20249	2.2
77775	2.7	10865	2.3	20249	2.2
01381	2.69	10865	2.3	20249	2.2
12203	2.66	10865	2.3	20249	2.2
18941	2.65	10865	2.3	20249	2.2
18941	2.65	10865	2.3	20249	2.2
00839	2.62	10865	2.3	20249	2.2
00839	2.6	10865	2.3	20249	2.2
02511	2.6	10865	2.3	20249	2.2
16612	2.59	10865	2.3	20249	2.2
16612	2.59	10865	2.3	20249	2.2
14104	2.57	10865	2.3	20249	2.2
00839	2.51	10865	2.3	20249	2.2
03588	2.5	10865	2.3	20249	2.2
04621	2.5	10865	2.3	20249	2.2
04621	2.5	10865	2.3	20249	2.2
04621	2.5	10865	2.3	20249	2.2
07462	2.5	10865	2.3	15372	2.17
07472	2.5	10865	2.3	06124	2.1
12203	2.5	10865	2.3	07839	2.1
12203	2.5	10865	2.3	38842	2.1
14104	2.5	10865	2.3	05658	2
16612	2.5	10865	2.3	19347	2
16612	2.5	10865	2.3	19347	2
16612	2.5	10865	2.3	19347	2
16612	2.5	10865	2.3	20699	2
17370	2.5	10865	2.3	20699	2
20007	2.5	10865	2.3	20699	2

Table V-17 (Continued)

APPLIED FLOW RATES FOR
FERROUS DUST COLLECTION SCRUBBER

Plant Code	Applied Flow Rate (gallons/1,000 SCF)	Plant Code	Applied Flow Rate (gallons/1,000 SCF)	Plant Code	Applied Flow Rate (gallons/1,000 SCF)
20699	2	18919	1.1	01756	0.54
20699	2	16502	1.09	16502	0.53
01381	1.97	05008	1.04	00015	0.5
03901	1.96	01835	1.03	02883	0.5
03901	1.96	08868	1	07298	0.5
03901	1.96	08868	1	07462	0.5
03901	1.96	08868	1	14173	0.5
03901	1.96	08868	1	03760	0.49
01834	1.9	08868	1	00388	0.48
20007	1.9	13578	1	00388	0.48
06999	1.88	17331	1	08016	0.48
15372	1.875	17230	0.94	16502	0.48
01381	1.87	07902	0.89	20009	0.48
01381	1.79	17230	0.89	02883	0.45
01381	1.79	17230	0.87	07298	0.44
07472	1.7	17230	0.87	08016	0.44
15104	1.63	01381	0.83	08016	0.44
15104	1.6	02495	0.83	08518	0.44
19533	1.6	09024	0.8	07322	0.43
94412	1.6	20009	0.77	07863	0.39
06999	1.58	20009	0.77	20009	0.38
01381	1.56	20009	0.77	00396	0.36
01381	1.5	27743	0.75	03854	0.36
03646	1.5	27743	0.75	07024	0.33
01292	1.45	27743	0.75	07298	0.33
11635	1.4	27743	0.75	08070	0.33
11635	1.4	27743	0.75	20009	0.33
11635	1.4	74991	0.75	09929	0.32
94412	1.4	74991	0.75	20009	0.32
19933	1.3	13578	0.73	20699	0.32
05008	1.25	27743	0.71	20009	0.31
14173	1.25	13578	0.7	07024	0.28
14173	1.25	20009	0.68	20699	0.28
06999	1.14	08016	0.67	20009	0.27
17289	1.12	14173	0.67	03760	0.25
14173	1.11	06124	0.66	07024	0.25
06124	1.1	20112	0.65	07024	0.25
07929	1.1	74991	0.64	07024	0.25
07929	1.1	00015	0.63	11865	0.25
07929	1.1	20112	0.62	28488	0.25
07929	1.1	09441	0.6	28488	0.24
07929	1.1	07902	0.57	05658	0.22
07929	1.1	18919	0.56	03760	0.21
07929	1.1	18919	0.56	20699	0.21
07929	1.1	01756	0.55	88281	0.21
17289	1.1	01756	0.54	00791	0.2

Table V-17 (Continued)

APPLIED FLOW RATES FOR
FERROUS DUST COLLECTION SCRUBBER

Plant Code	Applied Flow Rate (gallons/1,000 SCF)	Plant Code	Applied Flow Rate (gallons/1,000 SCF)	Plant Code	Applied Flow Rate (gallons/1,000 SCF)
03432	0.2	20208	0.1	20208	0.033
05622	0.19	20208	0.1	02243	0.03
14761	0.19	03432	0.095	07344	0.03
05333	0.17	08518	0.093	11598	0.026
08518	0.17	03432	0.088	20208	0.026
14761	0.15	13460	0.088	24566	0.026
17018	0.15	24566	0.083	00880	0.02
03432	0.14	74991	0.083	11197	0.02
11865	0.14	08518	0.082	12164	0.02
14761	0.14	11197	0.08	02365	0.015
08518	0.138	18882	0.08	02365	0.015
06123	0.136	24566	0.071	05643	0.015
74991	0.13	08518	0.066	13460	0.015
06123	0.126	74991	0.063	42344	0.013
06123	0.125	03118	0.06	04100	0.011
06123	0.125	11197	0.06	05912	0.011
06123	0.125	24566	0.057	13460	0.011
06123	0.125	08518	0.054	00698	0.01
06123	0.125	08518	0.054	00698	0.01
06123	0.125	74991	0.053	01953	0.01
06123	0.125	05643	0.05	02236	0.01
06123	0.125	06773	0.05	15873	0.01
06123	0.125	11197	0.05	04100	0.008
08285	0.125	20011	0.05	42344	0.006
03878	0.12	74991	0.05	11598	0.0056
03878	0.12	20208	0.045	11598	0.005
03049	0.11	04688	0.04	13460	0.004
03432	0.11	05643	0.04	13460	0.004
03913	0.11	11598	0.035	08436	0.00044
03913	0.11	13460	0.033	08436	0.00036
08518	0.1	20208	0.033		

Table V-18

APPLIED FLOW RATES FOR
FERROUS GRINDING SCRUBBER

Plant Code	Applied Flow Rate (gallons/1,000 SCF)
07438	78.26
11964	18
94412	10
94412	10
04621	7.14
04621	6.52
63773	5
63773	5
63773	5
19733	4.64
94412	4.4
13416	4.34
19733	4.1
13416	4
13416	4
13416	4
13416	4
13416	4
13416	4
19733	3.57
19733	3.57
15520	3.5
16612	3.49
16612	3.49
20249	3.49
15520	3.48
15520	3.48
16612	3.45
16612	3.45
16882	3.4
16882	3.4
16612	3.33
16612	3.33
16612	3.33
16612	3.33
16882	3.26
16612	3.19
16612	3.19
04621	3.15
16612	3.12
16612	3.12

Table V-18 (Continued)

APPLIED FLOW RATES FOR
FERROUS GRINDING SCRUBBER

Plant Code	Applied Flow Rate (gallons/1,000 SCF)
04621	3
04621	3
04621	3
04621	3
14809	3
14809	3
17348	3
16612	2.91
16612	2.91
16612	2.91
16612	2.91
16612	2.86
10865	2.35
10865	2.34
19347	2
19347	2
19347	2
03898	1.83
14173	1.25
00396	0.67
03049	0.56
18919	0.56
06123	0.25
07024	0.25
05167	0.17
06123	0.12
06123	0.12
06123	0.12
03432	0.1
03432	0.08
08518	0.07
08518	0.05
08518	0.05
10600	0.03
00891	0.006

Table V-19

APPLIED FLOW RATES FOR
FERROUS MELTING FURNACE SCRUBBER

Plant Code	Applied Flow Rate (gallons/1,000 SCF)
07170	125
07438	78.3
01942	71.43
05584	60
04621	41.7
04621	41.7
04621	41.7
04621	41.7
03913	41.4
03898	41.2
16502	36
04632	30.8
04577	29.4
58823	28.7
14670	27.8
13416	27.3
13416	27.3
13416	27.3
20345	27
17230	26.1
15555	25.5
05533	25
28822	24
09183	21.5
03646	20
09024	19.6
23455	17.8
23455	17.8
07472	17.4
19820	16.7
05533	16.7
01381	16.2
10684	15.9
19820	15.4
19408	15
19408	15
06343	13.64
16612	12.5
16612	12.5
03901	12.5
01801	11.3

Table V-19 (Continued)

APPLIED FLOW RATES FOR
FERROUS MELTING FURNACE SCRUBBER

Plant Code	Applied Flow Rate (gallons/1,000 SCF)
16612	11.1
14254	11
08496	10
16612	10
16612	10
14809	9.84
14809	9.84
02236	9.8
14809	9.75
18073	9.75
18073	9.75
18073	9.75
18073	9.75
14254	9.7
14254	9.7
14809	9.68
09035	9.53
14809	9.43
14809	9.43
05008	9.3
14809	9.27
14809	8.65
10865	8.33
10865	8.33
10865	8.33
02121	8.3
18073	8.3
18073	8.3
06426	7.5
05008	7.3
03313	7
14809	6.78
12393	6.67
07678	6.4
14809	6.02
08944	5.9
23454	5.8
14809	4.5
13416	4
13416	4
08944	2.8

Table V-19 (Continued)

APPLIED FLOW RATES FOR
FERROUS MELTING FURNACE SCRUBBER

Plant Code	Applied Flow Rate (gallons/1,000 SCF)
08092	2.3
53772	1.5
03383	1.25
00000	1
00001	NA
00002	NA
00396	NA
00749	NA
01064	NA
01635	NA
02031	NA
02195	NA
02418	NA
03399	NA
03868	NA
04955	NA
05640	NA
05642	NA
05658	NA
05691	NA
06265	NA
06956	NA
07225	NA
07524	NA
08016	NA
08301	NA
08663	NA
08828	NA
09151	NA
09441	NA
09593	NA
09706	NA
09925	NA
11964	NA
14069	NA
15520	NA
17746	NA
19347	NA
19533	NA
20249	NA
28821	NA

Table V-19 (Continued)

APPLIED FLOW RATES FOR
FERROUS MELTING FURNACE SCRUBBER

Plant Code	Applied Flow Rate (gallons/1,000 SCF)
50000	NA
52491	NA
53219	NA
56789	NA
57775	NA
58589	NA
63773	NA
74991	NA
77775	NA
80002	NA
80122	NA
80788	NA
82921	NA
83075	NA
83810	NA
85100	NA
85909	NA
86100	NA
86956	NA
89934	NA
94412	NA
14173	NA
14444	NA
30160	NA
80116	NA
88281	NA
89933	NA

NA - Data not reported.

Table V-20

APPLIED FLOW RATES FOR
FERROUS MOLD COOLING

Plant Code	Applied Flow Rate (gallons/ton)
18947	9,434
15654	5,550
14580	4,377
08944	1,376
17746	986
14069	426.8
11865	304
14444	201
15555	190
03069	55
00388	NA
14173	NA
15104	NA
17018	NA

NA - Data not reported.

Table V-21

APPLIED FLOW RATES FOR
FERROUS SLAG QUENCH

Plant Code	Applied Flow Rate (gallons/ton)
83810	64,000
58823	7,192
19533	6,558.7
10684	5,731
13416	4,235
82277	3,876
01756	3,231
06213	3,173
28822	3,086
28821	2,788
05533	2,713
10865	2,368
05691	2,280
17380	2,251
16612	2,247
09441	2,216
14809	2,038
04621	1,943
85909	1,693
27500	1,652
02195	1,650
08518	1,589
19347	1,500
09706	1,441
74991	1,397
01942	1,287
03901	1,201
15520	1,176
04688	1,162
03646	1,007
15555	997
24595	935
11964	925
14069	880
02121	873
50000	810
14173	805
18919	777
23455	753
16666	727
20784	646
17746	632

Table V-21 (Continued)

APPLIED FLOW RATES FOR
FERROUS SLAG QUENCH

Plant Code	Applied Flow Rate (gallons/ton)
11865	607
19408	575
19343	571
14444	540
80002	524
83075	491
03313	436
20699	415
10388	414.3
19820	400
05538	378.9
07678	330
17348	327
06123	324
20112	304
06956	302
20345	300
09035	285
02031	274
94412	262
06773	259
07322	256
18947	236
00749	183
02365	180
17018	179
01381	162.7
05930	87.3
08828	47.3
13089	47.1
08663	38.7
01635	37.5
01801	28
02236	16.7
08070	16
04577	7.14
05658	2.4
04073	NA
04222	NA
06565	NA
20249	NA

Table V-21 (Continued)

APPLIED FLOW RATES FOR
FERROUS SLAG QUENCH

Plant Code	Applied Flow Rate (gallons/ton)
27743	NA
30160	NA
53772	NA
63773	NA
89933	NA
89934	NA

NA - Data not reported.

Table V-22

APPLIED FLOW RATES FOR
FERROUS WET SAND RECLAMATION

Plant Code	Applied Flow Rate (gallons/ton)
11964	3,085
17348	3,040
17380	2,808
20009	1,565
24566	1,518
20699	1,402
80770	916.2
51473	873
07024	686
20007	465
14173	234.9
51115	213
15520	198
13089	59.8
01381	NA
07902	NA

NA - Data not reported.

Table V-23

APPLIED FLOW RATES FOR
MAGNESIUM CASTING QUENCH

Plant Code	Applied Flow Rate (gallons/ton)
07414	NA
08919	NA

NA - Data not reported.

Table V-24

APPLIED FLOW RATES FOR
MAGNESIUM DUST COLLECTION SCRUBBER

Plant Code	Applied Flow Rate (gallons/1,000 SCF)
08146	0.5
08146	0.05

Table V-25

APPLIED FLOW RATES FOR
MAGNESIUM GRINDING SCRUBBER

Plant Code	Applied Flow Rate (gallons/1,000 SCF)
05244	NA

NA - Data not reported.

Table V-26

APPLIED FLOW RATES FOR
ZINC CASTING QUENCH

Plant Code	Applied Flow Rate (gallons/ton)
29434	40,632
05117	7,259
01385	6,598
02589	4,096
01334	4,000
18463	2,152
29697	888
10640	857
21207	772
18139	591
05091	533
84469	458
01707	320
83713	245
04622	147
18047	144
85550	92.7
13524	66.7
12060	32.7
10308	28.1
08724	5.5
04525	NA
04839	NA
05739	NA
05947	NA
06606	NA
09105	NA
09707	NA
10475	NA
15506	NA
81150	NA

NA - Data not reported.

Table V-27

APPLIED FLOW RATES FOR
ZINC DIE CASTING

Plant Code	Applied Flow Rate (gallons/ton)
18139	41.4
84469	28.6
84994	22.6
04622	9.4
83713	3.33
82111	(1)
05117	NA
06606	NA
08724	NA
09105	NA
09707	NA
10308	NA
10475	NA
10640	NA
12060	NA
13524	NA
18047	NA
29434	NA
29697	NA
80120	NA
82111	NA

(1) Die casting, mold cooling, casting quench wastewater reported together.

NA - Data not reported.

Table V-28

APPLIED FLOW RATES FOR
ZINC MELTING FURNACE SCRUBBER

Plant Code	Applied Flow Rate (gallons/1,000 SCF)
10640	24
18139	9.38
18139	9.38
18139	6.07
18139	6.07
13524	0.81
13524	0.81
10475	0.38
18047	0.38
04622	0.33
13524	0.27
13524	0.27
13524	0.25
13524	0.25
18047	0.24

Table V-29

APPLIED FLOW RATES FOR
ZINC MOLD COOLING

Plant Code	Applied Flow Rate (gallons/ton)
04622	4,860
02589	4,100
01334	4,000
10640	1,890
05947	685
18139	230
09105	42.7
80120	NA
01707	NA
21207	NA

NA - Data not reported.

Table V-30

METAL MOLDING AND CASTING
ANALYTICAL DATA SUMMARY

Aluminum Casting Quench - Raw Wastewater

Pollutant	Number of Samples Analyzed	Number of Times Detected at Quantifiable Levels	Concentration Range (mg/l)	Average Concentration (mg/l)[1]	Average Loed (mg/kkg)[2]
004 Benzene	4	2	0.0 - 0.02	0.009	0.659
015 1,1,2,2-Tetrachloroethane	4	1	0.013	0.013	1.52
021 2,4,6-Trichlorophenol	4	2	0.3 - 0.58	0.044	23.4
022 Parachlorometacresol	4	1	0.925	0.925	18.4
023 Chloroform	4	1	0.0 - 0.035	0.009	1.03
034 2,4-Dimethylphenol	4	2	0.05 - 0.13	0.09	1.78
038 Ethylbenzene	4	1	0.0 - 0.033	0.011	1.29
039 Fluoranthene	4	2	0.0 - 0.43	0.215	4.27
044 Methylene chloride	4	3	0.012 - 0.027	0.018	1.23
057 2-Nitrophenol	4	1	0.038	0.038	4.46
059 2,4-Dinitrophenol	4	1	0.41	0.41	8.14
060 4,6-Dinitro-o-cresol	4	1	0.285	0.285	5.66
065 Phenol	4	3	0.038 - 0.072	0.051	1.00
066 Bis(2-ethyl hexyl)phthalate	4	4	0.013 - 0.54	0.173	5.26
067 Butyl benzyl phthalate	4	3	0.04 - 0.082	0.063	2.56
071 Dimethyl phthalate	4	1	0.035	0.035	4.11
077 Acenaphthalene	4	1	0.0 - 0.14	0.07	1.39
084 Pyrene	4	3	0.0 - 0.5	0.199	3.94
085 Tetrachloroethylene	4	3	0.099 - 0.255	0.161	6.42
087 Trichloroethylene	4	3	0.0 - 0.022	0.012	0.605
115 Arsenic	1	1	0.01	0.01	0.200
120 Copper	3	3	0.07 - 0.3	0.187	5.98
122 Lead	4	1	0.0 - 0.44	0.11	12.9
124 Nickel	3	1	0.0 - 0.04	0.013	1.57

Table V-30 (Continued)

METAL MOLDING AND CASTING
ANALYTICAL DATA SUMMARY

Aluminum Casting Quench - Raw Wastewater

	Pollutant	Number of Samples Analyzed	Number of Times Detected at Quantifiable Levels	Concentration Range (mg/l)	Average Concentration (mg/l)[1]	Average Load (mg/kkg)[2]
128	Zinc	4	4	0.15 - 9.1	2.49	271
	Aluminum	4	4	0.9 - 5.3	2.35	176
	Iron	1	1	4.7	4.7	551
	Manganese	4	4	0.07 - 0.56	0.093	17.8
	Oil & Grease	4	4	103 - 182	151	6,390
	Phenols (4AAP)	4	4	0.036 - 0.156	0.081	3.14
	Suspended Solids	4	4	58 - 1,307	720	15,700

[1]Straight average of available analytical data. Concentrations have not been normalized to account for flow rates and degree of recycle at sampled plants.

[2]Normalized mass of pollutant generated per unit of production.

Table V-31

METAL MOLDING AND CASTING
ANALYTICAL DATA SUMMARY

Aluminum Die Casting - Raw Wastewater

Pollutant	Number of Samples Analyzed	Number of Times Detected at Quantifiable Levels	Concentration Range (mg/l)	Average Concentration[1] (mg/l)	Average Load (mg/kkg)[2]
001 Acenaphthene	14	3	0.054 - 0.38	0.221	566
004 Benzene	14	5	0.0 - 0.555	0.100	24.4
005 Benzidine	14	1	7.6	7.6	635
006 Carbon tetrachloride	14	2	0.0 - 1.40	0.287	26.2
007 Chlorobenzene	14	4	0.013 - 1.6	0.590	127
010 1,2-Dichloroethane	14	1	0.520	0.520	76
011 1,1,1-Trichloroethane	14	5	0.0 -37	11.01	1720
013 1,1-Dichloroethane	14	1	0.165	0.165	24.2
015 1,1,2,2-Tetrachloroethane	14	1	0.010	0.010	55.6
018 Bis(2-chloroethyl)ether	14	1	0.024	0.024	133
021 2,4,6-Trichlorophenol	14	5	0.015 - 2.0	0.632	1630
022 Parachlorometacresol	14	4	0.068 - 0.150	0.105	569
023 Chloroform	14	10	0.0 - 1.3	0.32	202
024 2-Chlorophenol	14	2	0.0 - 0.235	0.083	317
031 2,4-Dichlorophenol	14	2	0.0 - 0.150	0.073	350
034 2,4-Dimethylphenol	14	4	0.0 - 0.120	0.033	237
039 Fluoranthene	14	3	0.0 - 16	3.46	1320
044 Methylene chloride	14	13	0.003 - 6.2	1.224	316
048 Dichlorobromomethane	14	2	0.012 - 0.017	0.0145	25.4
055 Naphthalene	14	5	0.063 - 7.9	1.7	523
057 2-Nitrophenol	11	1	1.00	1.00	5080
058 4-Nitrophenol	14	1	0.45	0.45	37.6
062 N-Nitrosodiphenol	14	1	0.620	0.620	90.7
063 N-Nitrosodi-n-propylamine	14	2	0.022 - 0.078	0.050	278
064 Pentachlorophenol	14	1	4.80	4.80	798

Table V-31 (Continued)

METAL MOLDING AND CASTING
ANALYTICAL DATA SUMMARY

Aluminum Die Casting - Raw Wastewater

Pollutant	Number of Samples Analyzed	Number of Times Detected at Quantifiable Levels	Concentration Range (mg/l)	Average Concentration (mg/l)[1]	Average Load (mg/kkg)[2]
Aluminum	14	14	0.8 - 34	6.7	11,600
Ammonia	11	8	0.0 - 29	10.5	2,430
Iron	11	11	0.90 - 19	56.7	15,200
Manganese	14	10	0.0 - 0.29	0.07	257
Oil & Grease	14	14	48 - 49,900	8,284	3,280,000
Phenols (4AAP)	14	14	0.057 - 125	30.17	9,860
Suspended Solids	14	14	63 - 3,576	918	1,580,000

[1]Straight average of available analytical data. Concentrations have not been normalized to account for flow rates and degree of recycle at sampled plants.

[2]Normalized mass of pollutant generated per unit of production.

[a]Average load is not available.

Table V-32

METAL MOLDING AND CASTING
ANALYTICAL DATA SUMMARY

Aluminum Investment Casting - Raw Wastewater

Pollutant	Number of Samples Analyzed[1]	Number of Times Detected at Quantifiable Levels	Concentration Range (mg/l)	Average Concentration (mg/l)[2]	Average Load (mg/kkg)[3]
006 Carbon tetrachloride	3	1	0.0 - 0.083	0.028	595
010 1,2-Dichloroethane	3	1	0.0 - 0.005	0.003	58.7
011 1,1,1-Trichloroetbane	3	3	0.008 - 0.367	0.138	2,970
023 Chloroform	3	3	0.037 - 0.090	0.056	1,210
024 2-Chlorophenol	3	1	0.007	0.007	154
034 2,4-Dimethylphenol	3	1	0.008	0.008	176
044 Methylene chloride	3	3	0.012 - 0.097	0.041	889
055 Naphthalene	3	1	0.006	0.006	132
066 Bis(2-ethyl hexyl)phthalate	3	3	0.020 - 0.021	0.020	433
073 Benzo(a)pyrene	3	1	0.008	0.008	176
077 Acenaphthalene	3	1	0.031	0.031	668
084 Pyrene	3	1	0.086	0.086	1,850
085 Tetrachloroethylene	3	3	0.061 - 0.149	0.104	2,250
087 Trichloroethylene	3	3	0.035 - 0.087	0.067	1,430
106-108 PCB 1242, 1254, 1221	3	2	0.0 - 0.011	0.004	*
109-112 PCB 1232, 1248, 1260, 1016	3	3	0.002 - 0.026	0.011	*
119 Chromium	3	2	0.0 - 0.041	0.017	367
120 Copper	3	3	0.071 - 1.12	0.482	10,400
122 Lead	3	2	0.0 - 0.098	0.036	764
124 Nickel	3	2	0.0 - 0.012	0.006	125
128 Zinc	3	3	0.16 - 1.20	0.53	11,400

Table V-32 (Continued)

METAL MOLDING AND CASTING
ANALYTICAL DATA SUMMARY

Aluminum Investment Casting - Raw Wastewater

Pollutant	Number of Samples Analyzed[1]	Number of Times Detected at Quantifiable Levels	Concentration Range (mg/l)	Average Concentration (mg/l)[2]	Average Load (mg/kkg)[3]
Aluminum	3	3	0.94 - 4.33	2.19	47,600
Iron	3	3	2.04 - 4.18	2.82	60,700
Manganese	3	3	0.033 - 0.056	0.046	984
Oil & Grease	3	3	20 - 32	26	569,000
Suspended Solids	3	3	590 - 1,398	933	20,100,000

[1]Three sampling days data were available for plant 04704. Investment casting data are a flow weighted average of data for sample point B, D, and E for each day.

[2]Straight average of available analytical data. Concentrations have not been normalized to account for flow rates and degree of recycle at sampled plants.

[3]Normalized mass of pollutant generated per unit of production.

*Average load is not available.

Table V-33

METAL MOLDING AND CASTING
ANALYTICAL DATA SUMMARY

Aluminum Melting Furnace Scrubber - Raw Wastewater

Pollutant	Number of Samples Analyzed	Number of Times Detected at Quantifiable Levels	Concentration Range (mg/l)	Average Concentration (mg/l)[1]	Average Load (mg/1000m^3)[2]
001 Acenaphthene	6	1	0.0 - 0.023	0.012	1.75
021 2,4,6-Trichlorophenol	6	4	0.0 - 0.235	0.073	51.1
023 Chloroform	6	6	0.015 - 0.098	0.05	2.96
031 2,4-Dichlorophenol	6	1	0.0 - 0.018	0.004	1.88
034 2,4-Dimethylphenol	6	1	0.0 - 0.023	0.006	7.19
039 Fluoranthene	6	2	0.0 - 0.023	0.007	9.65
044 Methylene chloride	6	2	0.0 - 0.031	0.014	0.844
065 Phenol	6	3	0.0 - 0.023	0.009	1.74
066 Bis(2-ethyl hexyl)phthalate	6	6	0.03 - 0.320	0.14	126
068 Di-n-butyl phthalate	6	2	0.0 - 0.110	0.023	25.4
070 Diethyl phthalate	6	2	0.0 - 0.044	0.020	10
073 Benzo(a)pyrene	6	2	0.025 - 0.084	0.054	8.3
084 Pyrene	6	1	0.0 - 0.029	0.007	7.55
120 Copper	3	3	0.04 - 0.20	0.1	113
128 Zinc	6	6	0.04 - 0.30	0.2	73.6
Aluminum	6	6	0.1 - 5.8	2.6	3,510
Ammonia	6	3	0.0 - 0.6	0.2	45.7
Manganese	6	5	0.0 - 0.06	0.04	20.3
Oil & Grease	6	6	2 - 16	8	6,660
Phenols (4AAP)	6	6	0.002 - 1.28	0.44	413
Suspended Solids	6	6	2 - 53	29	32,200

[1]Straight average of available analytical data. Concentrations have not been normalized to account for flow rates and degree of recycle at sampled plants.

[2]Normalized mass of pollutant generated per unit of production.

Table V-34

METAL MOLDING AND CASTING
ANALYTICAL DATA SUMMARY

Copper Direct Chill Casting - Raw Wastewater

	Pollutant	Number of Samples Analyzed	Number of Times Detected at Quantifiable Levels	Concentration Range (mg/l)	Average Concentration (mg/l)[1]	Average Load (mg/kkg)[2]
120	Copper	3	3	14.9 - 32.0	29.3	58,400
122	Lead	3	3	0.10 - 0.20	0.15	289
124	Nickel	3	3	0.15 - 2.35	1.07	2,120
128	Zinc	3	3	4.38 - 7.18	5.91	11,700
	Aluminum	3	3	0.40 - 0.50	0.43	844
	Iron	3	3	1.35 - 3.05	1.95	3,860
	Manganese	3	3	0.05 - 0.10	0.08	164
	Oil & Grease	3	3	11 - 40	21	41,000
	Suspended Solids	3	3	78 - 125	99	197,000

[1]Straight average of available analytical data. Concentrations have not been normalized to account for flow rates and degree of recycle at sampled plants.

[2]Normalized mass of pollutant generated per unit of production.

Table V-35

METAL MOLDING AND CASTING
ANALYTICAL DATA SUMMARY

Copper Dust Collection Scrubber - Raw Wastewater

Pollutant	Number of Samples Analyzed	Number of Times Detected at Quantifiable Levels	Concentration Range (mg/l)	Average Concentration (mg/l)[1]	Average Load ($mg/1000m^3$)[2]
001 Acenaphthene	7	2	0.0 - 0.2	0.057	1.72
021 2,4,6-Trichlorophenol	7	1	0.0 - 0.024	0.008	*
022 Parachlorometacresol	7	2	0.0 - 0.044	0.011	0.573
023 Chloroform	7	1	0.0 - 0.023	0.004	0.126
034 2,4-Dimethylphenol	7	3	0.0 - 0.142	0.035	5.16
036 2,6-Dinitrotoluene	7	1	0.02	0.02	3.44
055 Naphthalene	7	2	0.0 - 0.025	0.007	1.15
057 2-Nitrophenol	7	1	0.0 - 0.079	0.040	*
058 4-Nitrophenol	7	2	0.0 - 0.033	0.016	4.01
064 Pentachlorophenol	7	3	0.0 - 0.116	0.028	1.15
065 Phenol	7	5	0.0 - 0.17	0.051	4.59
066 Bis(2-ethyl hexyl)phthalate	7	6	0.0 - 1.6	0.253	5.16
067 Butyl benzyl phthalate	7	5	0.01 - 0.71	0.27	45.9
068 Di-n-butyl phthalate	7	5	0.0 - 0.22	0.042	2.29
069 Di-n-octyl phthalate	7	1	0.0 - 2	1.0	*
070 Diethyl phthalate	7	2	0.0 - 0.025	0.013	2.29
071 Dimethyl phthalate	7	2	0.036 - 0.231	0.134	22.4
072 Benzo(a)anthracene	7	2	0.084 - 0.095	0.090	15.5
073 Benzo(a)pyrene	7	1	0.065	0.065	10.9
074 3,4-Benzofluoranthene	7	2	0.03 - 0.162	0.009	1.15
075 Benzo(k)fluoranthene	7	2	0.006 - 0.011	0.009	1.15
076 Chrysene	7	4	0.006 - 0.011	0.093	16.06
077 Acenaphthalene	7	2	0.0 - 0.022	0.011	1.72
078 Anthracene	7	5	0.0 - 0.24	0.049	2.87

Table V-35 (Continued)

METAL MOLDING AND CASTING
ANALYTICAL DATA SUMMARY

Copper Dust Collection Scrubber - Raw Wastewater

Pollutant	Number of Samples Analyzed	Number of Times Detected at Quantifiable Levels	Concentration Range (mg/l)	Average Concentration (mg/l)[1]	Average Load (mg/1000 m^3)[2]
081 Phenanthrene	7	5	0.0 - 0.24	0.049	2.87
084 Pyrene	7	5	0.0 - 0.044	0.022	3.44
115 Arsenic	4	4	0.01 - 0.03	0.018	2.87
118 Cadmium	5	5	0.01 - 1.2	0.322	17.2
119 Chromium	5	5	0.03 - 1.2	0.264	5.16
120 Copper	5	5	1.1 - 250	83.3	15,200
122 Lead	7	7	2.1 - 53	22.5	3,960
124 Nickel	5	5	0.04 - 3.1	1.14	109
126 Silver	4	4	0.02	0.02	3.44
128 Zinc	7	7	7.5 - 1,200	269.1	19,150
Aluminum	7	7	4.8 - 770	132	4,240
Iron	1	1	750	750	*
Manganese	7	7	0.16 - 11	2.28	139
Oil & Grease	7	7	2 - 55	17	1,800
Phenols (4AAP)	7	7	0.165 - 3.27	2.12	350
Suspended Solids	7	7	316 - 35,000	5,524	105,000

[1]Straight average of available analytical data. Concentrations have not been normalized to account for flow rates and degree of recycle at sampled plants.

[2]Normalized mass of pollutant generated per unit of production.

*Average load is not available.

Table V-36

METAL MOLDING AND CASTING
ANALYTICAL DATA SUMMARY

Copper Mold Cooling - Raw Wastewater

	Pollutant	Number of Samples Analyzed	Number of Times Detected at Quantifiable Levels	Concentration Range (mg/l)	Average Concentration (mg/l)[1]	Average Load (mg/kkg)[2]
006	Carbon tetrachloride	4	1	0.032	0.032	24.5
011	1,1,1-Trichloroethane	4	1	0.014	0.140	106
014	1,1,2-Trichloroethane	4	1	0.013	0.013	10.2
023	Chloroform	4	1	0.0 - 0.093	0.023	23.5
045	Methyl chloride	4	1	0.028	0.028	21.5
064	Pentachlorophenol	4	1	0.051	0.051	38.8
066	Bis(2-ethyl hexyl)phthalate	4	4	0.016 - 0.15	0.071	67.5
071	Dimethyl phthalate	4	1	0.0 - 0.036	0.018	13.3
085	Tetrachloroethylene	4	1	0.280	0.280	212
087	Trichloroethylene	4	1	0.180	0.180	136
118	Cadmium	3	3	0.01 - 0.13	0.077	82.8
120	Copper	3	3	0.27 - 1.1	0.61	272
122	Lead	4	4	0.05 - 0.89	0.26	37.8
128	Zinc	4	4	1.9 - 3.5	2.45	1,590
	Aluminum	4	4	0.2 - 0.9	0.45	227
	Manganese	4	4	0.07 - 0.12	0.07	65.4
	Oil & Grease	4	4	1 - 110	34	33,800
	Phenols (4AAP)	4	4	0.003 - 0.012	0.006	5.11
	Suspended Solids	4	4	16 - 82	46	42,400

[1] Straight average of available analytical data. Concentrations have not been normalized to account for flow rates and degree of recycle at sampled plants.

[2] Normalized mass of pollutant generated per unit of production.

Table V-37

METAL MOLDING AND CASTING
ANALYTICAL DATA SUMMARY

Ferrous Casting Cleaning - Raw Wastewater

Pollutant	Number of Samples Analyzed	Number of Times Detected at Quantifiable Levels	Concentration Range (mg/l)	Average Concentration (mg/l)[1]	Average Load (mg/kkg)[2]
114 Antimony	3	2	0.0 - 0.12	0.07	11.0
118 Cadmium	3	3	0.92 - 1.1	1.0	151
119 Chromium	3	3	0.046 - 0.068	0.057	8.61
124 Nickel	3	3	61 - 72	66	9,950
126 Silver	3	3	0.0175 - 0.024	0.022	3.23
128 Zinc	3	3	0.16 - 0.64	0.36	54.1
Cobalt	3	3	0.10 - 0.11	0.11	16.0
Iron	3	3	6.1 - 19	11.6	1,740
Manganese	3	3	2.9 - 3.2	3.1	461
Oil & Grease	2	2	7.1 - 9.8	8.4	1,270
Phenol (4AAP)	3	3	0.041 - 0.11	0.066	9.85
Suspended Solids	3	3	10 - 54	28	4,310

[1]Straight average of available analytical data. Concentrations have not been normalized to account for flow rates and degree of recycle at sampled plants.

[2]Normalized mass of pollutant generated per unit of production.

Table V-38

METAL MOLDING AND CASTING
ANALYTICAL DATA SUMMARY

Ferrous Casting Quench - Raw Wastewater

	Pollutant	Number of Samples Analyzed	Number of Times Detected at Quantifiable Levels	Concentration Range (mg/l)	Average Concentration (mg/l)[1]	Average Load (mg/kkg)[2]
004	Benzene	1	1	0.002	0.002	3.57
023	Chloroform	1	1	0.032	0.032	58.6
034	2,4-Dimethylphenol	1	1	0.021	0.021	38.4
120	Copper	6	6	0.001 - 0.24	0.16	182
122	Lead	6	1	0.0 - 0.05	0.008	19.8
124	Nickel	6	5	0.0 - 0.12	0.056	132
128	Zinc	6	5	0.0 - 0.05	0.020	47.4
	Aluminum	6	4	0.079 - 0.5	0.28	586
	Iron	6	6	1.1 - 42	15	35,200
	Manganese	4	4	0.059 - 0.9	0.28	628
	Suspended Solids	6	6	16-36	29	61,800

[1] Straight average of available analytical data. Concentrations have not been normalized to account for flow rates and degree of recycle at sampled plants.

[2] Normalized mass of pollutant generated per unit of production.

Table V-39

METAL MOLDING AND CASTING
ANALYTICAL DATA SUMMARY

Ferrous Dust Collection Scrubber - Raw Wastewater

Pollutant	Number of Samples Analyzed	Number of Times Detected at Quantifiable Levels	Concentration Range (mg/l)	Average Concentration[1] (mg/l)	Average Load ($mg/1000m^3$)[2]
001 Acenaphthene	32	12	0.0 - 0.07	0.014	4.05
011 1,1,1-Trichloroethane	32	2	0.0 - 0.075	0.01	8.18
020 2-Chloronaphthalene	32	1	0.01	0.01	*
022 Parachlorometacresol	32	3	0.0 - 0.2	0.09	9.26
023 Chloroform	32	14	0.0 - 0.078	0.012	3.49
024 2-Chlorophenol	32	3	0.0 - 0.23	0.028	3.45
031 2,4-Dichlorophenol	32	15	0.0 - 1.4	0.3	28.4
034 2,4-Dimethylphenol	32	17	0.0 - 1.2	0.2	102
035 2,4-Dinitrotoluene	32	1	0.0 - 0.095	0.018	1.48
036 2,6-Dinitrotoluene	32	1	0.0 - 0.095	0.018	1.48
039 Fluoranthene	32	20	0.0 - 0.073	0.022	1.60
043 Bis(2-chloroethoxy)methane	32	2	0.0 - 0.045	0.015	11.7
044 Methylene chloride	32	18	0.0 - 0.22	0.03	3.53
054 Isophorone	32	4	0.0 - 0.074	0.034	1.16
055 Naphthalene	32	11	0.0 - 0.13	0.025	11.3
056 Nitrobenzene	32	1	0.021	0.021	9.86
057 2-Nitrophenol	32	4	0.0 - 0.025	0.007	1.40
058 4-Nitrophenol	32	2	0.0 - 0.038	0.016	5.57
062 N-Nitrosodiphenol	32	3	0.0 - 0.046	0.024	4.89
064 Pentachlorophenol	32	19	0.0 - 0.1	0.032	3.13
065 Phenol	32	24	0.0 - 17	2	558
066 Bis(2-ethyl hexyl)phthalate	32	26	0.0 - 1.0	0.074	12.5
067 Butyl benzyl phthalate	32	11	0.0 - 0.13	0.02	4.41
068 Di-n-butyl phthalate	32	24	0.0 - 0.096	0.036	5.01
069 Di-n-ootyl phthalate	32	2	0.0 - 0.11	0.007	1.40

Table V-39 (Continued)

METAL MOLDING AND CASTING
ANALYTICAL DATA SUMMARY

Ferrous Dust Collection Scrubber - Raw Wastewater

Pollutant	Number of Samples Analyzed	Number of Times Detected at Quantifiable Levels	Concentration Range (mg/l)	Average Concentration[1] (mg/l)	Average Load (mg/1000m^3)[2]
070 Diethyl phthalate	32	20	0.0 - 0.042	0.020	2.16
071 Dimethyl phtbalate	32	25	0.0 - 1.90	0.18	25.8
072 Benzo(a)anthracene	32	4	0.0 - 0.036	0.006	0.441
076 Chrysene	32	14	0.0 - 0.026	0.010	1.36
077 Acenaphthalene	32	9	0.0 - 0.074	0.014	3.21
078 Anthracene	32	26	0.0 - 0.1375	0.030	8.34
080 Fluorene	32	12	0.0 - 0.077	0.0163	5.61
081 Phenanthrene	32	26	0.0 - 0.1375	0.030	8.38
084 Pyrene	32	22	0.0 - 0.065	0.022	2.57
085 Tetrachloroethylene	32	3	0.0 - 0.11	0.01	5.21
087 Trichloroethylene	32	2	0.0 - 0.066	0.020	13.1
099 Endrin aldehyde	16	1	0.0 - 0.073	0.008	*
106-108 PCB 1242, 1254, 1221	16	1	0.0 - 0.023	0.002	*
109-112 PCB 1232, 1248, 1260, 1016	16	1	0.0 - 0.022	0.002	*
114 Antimony	37	8	0.0 - 0.4	0.03	8.38
115 Arsenic	38	19	0.0 - 0.11	0.02	2.57
117 Beryllium	40	3	0.0 - 0.01	0.0005	0.0060
119 Chromium	37	24	0.0 - 0.49	0.07	12.4
120 Copper	45	42	0.0 - 1.1	0.3	45.9
122 Lead	53	48	0.0 - 3	0.3	35.3
123 Mercury	42	29	0.0 - 0.0031	0.0005	0.0401
124 Nickel	45	33	0.0 - 0.8	0.12	17.7
128 Zinc	53	53	0.007 - 11	1	141

Table V-39 (Continued)

METAL MOLDING AND CASTING
ANALYTICAL DATA SUMMARY

Ferrous Dust Collection Scrubber - Raw Wastewater

Pollutant	Number of Samples Analyzed	Number of Times Detected at Quantifiable Levels	Concentration Range (mg/l)	Average Concentration (mg/l)[1]	Average Load (mg/1000m^3)[2]
Aluminum	50	50	0.06 - 222	40.8	8,290
Ammonia (N)	36	36	0.1 - 70	27	1,350
Cobalt	14	2	0.0 - 0.013	0.002	0.281
Iron	54	54	2.8 - 920	98	14,600
Manganese	50	50	0.25 - 42	2.9	477
Oil & Grease	46	46	1.9 - 55	13.6	1,130
Phenols (4AAP)	49	49	0.054 - 59.5	4.5	1,250
Suspended Solids	54	54	16 - 22,700	3,412	651,000

[1]Straight average of available analytical data. Concentrations have not been normalized to account for flow rates and degree of recycle at sampled plants.

[2]Normalized mass of pollutant generated per unit of production.

*Average load is not available.

Table V-40

METAL MOLDING AND CASTING
ANALYTICAL DATA SUMMARY

Ferrous Melting Furnace Scrubber - Raw Wastewater

Pollutant	Number of Samples Analyzed	Number of Times Detected at Quantifiable Levels	Concentration Range (mg/l)	Average Concentration[1] (mg/l)	Average Load ($mg/1000m^3$)[2]
004 Benzene	3	2	0.0 - 0.030	0.014	26.7
011 1,1,1-Trichloroethane	3	2	0.0 - 0.041	0.023	61.8
023 Chloroform	3	2	0.0 - 0.034	0.018	47.7
030 1,2-trans-Dichloroethylene	3	1	0.033	0.033	88.4
031 2,4-Dichlorophenol	3	1	0.0 - 0.012	0.006	15.4
034 2,4-Dimethylphenol	3	3	0.041 - 0.058	0.051	85.6
039 Fluoranthene	3	2	0.0 - 0.061	0.031	82.8
044 Methylene chloride	3	1	0.0 - 0.019	0.006	4.21
055 Naphthalene	3	2	0.0 - 0.025	0.015	40.7
056 Nitrobenzene	3	1	0.049	0.049	130
059 2,4-Dinitrophenol	3	1	0.019	0.019	50.5
060 4,6-Dinitro-o-cresol	3	1	0.045	0.045	120
062 n-Nitrosodipbenol	3	2	0.027 - 0.043	0.035	57.5
065 Phenol	3	3	0.580 - 0.880	0.683	1,820
066 Bis(2-ethyl hexyl)phthalate	3	2	0.0 - 0.076	0.040	71.6
067 Butyl benzyl phthalate	3	1	0.0 - 0.044	0.015	39.3
068 Di-n-butyl phthalate	3	1	0.0 - 0.032	0.011	28.1
072 Benzo(a)anthracene	3	2	0.017 - 0.047	0.032	85.6
074 3,4-Benzofluoranthene	3	1	0.019	0.019	50.5
075 Benzo(k)fluoranthene	3	1	0.018	0.018	47.7
076 Chrysene	3	2	0.0 - 0.029	0.017	46.3
077 Acenaphthalene	3	2	0.0 - 0.037	0.020	54.7
078 Anthracene	3	3	0.015 - 0.144	0.075	95.4
080 Fluorene	3	2	0.0 - 0.035	0.019	50.5
081 Phenanthrene	3	3	0.015 - 0.144	0.075	95.4

Table V-40 (Continued)

METAL MOLDING AND CASTING
ANALYTICAL DATA SUMMARY

Ferrous Melting Furnace Scrubber - Raw Wastewater

Pollutant	Number of Samples Analyzed	Number of Times Detected at Quantifiable Levels	Concentration Range (mg/l)	Average Concentration (mg/l)[1]	Average Load (mg/1000m^3)[2]
084 Pyrene	3	2	0.0 - 0.062	0.031	84.2
085 Tetrachloroethylene	3	2	0.0 - 0.077	0.044	116
086 Toluene	3	1	0.0 - 0.011	0.003	9.82
087 Trichloroethylene	3	2	0.0 - 0.063	0.034	91.2
114 Antimony	11	11	0.06 - 1.4	0.64	1,140
115 Arsenic	11	8	0.0 - 0.17	0.065	94.0
117 Beryllium	15	6	0.0 - 0.02	0.007	4.21
118 Cadmium	12	9	0.0 - 1.50	0.56	807
119 Chromium	12	12	0.17 - 0.60	0.31	359
120 Copper	15	14	0.0 - 2.50	1.07	1,720
122 Lead	15	13	0.0 - 160	35.0	89,300
124 Nickel	15	10	0.0 - 0.15	0.05	64.6
125 Selenium	12	12	0.01 - 0.55	0.14	40.7
126 Silver	12	6	0.0 - 0.06	0.013	12.6
128 Zinc	15	15	0.4 - 190	81.4	136,000
Aluminum	15	15	2.3 - 87.5	28.4	56,000
Ammonia	6	6	2.1 - 12	7.0	4,290
Fluoride	6	6	4.8 - 242	94.6	193,000
Iron	15	15	14 - 227	76	99,900
Manganese	15	15	9.9 - 85.8	34.8	35,700
Oil & Grease	11	10	0.0 - 36	8	11,400
Phenols (4AAP)	14	13	0.0 - 2.67	0.88	1,360
Suspended Solids	14	14	188 - 3,500	839	1,120,000

[1]Straight average of available analytical data. Concentrations have not been normalized to account for flow rates and degree of recycle at sampled plants.

[2]Normalized mass of pollutant generated per unit of production.

Table V-41

METAL MOLDING AND CASTING
ANALYTICAL DATA SUMMARY

Ferrous Mold Cooling - Raw Wastewater

Pollutant	Number of Samples Analyzed	Number of Times Detected at Quantifiable Levels	Concentration Range (mg/l)	Average Concentration (mg/l)[1]	Average Load (mg/kkg)[2]
Aluminum	2	2	9.3 - 16	12.6	9,340
Iron	6	6	6.9 - 8.9	7.7	7,720
Manganese	2	2	0.11 - 0.41	0.26	114
Oil & Grease	2	2	1.7 - 22.7	12	22,300
Phenols	6	6	0.014 - 0.026	0.020	17.5
Suspended Solids	6	6	80 - 564	331	169,000

[1]Straight average of available analytical data. Concentrations have not been normalized to account for flow rates and degree of recycle at sampled plants.

[2]Normalized mass of pollutant generated per unit of production.

Table V-42

METAL MOLDING AND CASTING
ANALYTICAL DATA SUMMARY

Ferrous Slag Quench - Raw Wastewater

Pollutant	Number of Samples Analyzed	Number of Times Detected at Quantifiable Levels	Concentration Range (mg/l)	Average Concentration (mg/l)[1]	Average Load (mg/kkg)[2]
034 2,4-Dimethylphenol	3	3	0.024 - 0.052	0.036	72.8
071 Dimethyl phthalate	3	1	0.0 - 0.077	0.038	94.0
085 Tetrachloroethylene	3	1	0 - 0.065	0.022	78.9
087 Trichloroethylene	3	1	0 - 0.072	0.034	88.0
118 Cadmium	6	3	0.0 - 0.01	0.005	*
119 Chromium	6	6	0.04 - 0.08	0.06	191
120 Copper	10	7	0.0 - 0.09	0.04	33.4
122 Lead	10	7	0.0 - 1.1	0.4	491
124 Nickel	10	6	0.0 - 0.10	0.03	97.1
128 Zinc	10	8	0.0 - 4.0	0.98	667
Aluminum	11	11	1.2 - 18	6.4	14,700
Ammonia (N)	10	9	0.0 - 11	3.4	1,660
Fluoride	8	8	0.07 - 99	32.2	63,800
Iron	13	13	1.3 - 7.7	4.2	8,580
Manganese	11	11	1.0 - 2.7	1.6	3,030
Oil & Grease	11	11	1.0 - 7	3.7	5,250
Phenols (4AAP)	13	12	0.0 - 0.521	0.097	27.3
Suspended Solids	13	13	45 - 227	94	148,000

[1]Straight average of available analytical data. Concentrations have not been normalized to account for flow rates and degree of recycle at sampled plants.

[2]Normalized mass of pollutant generated per unit of production.

*Average load is not available.

Table V-43

METAL MOLDING AND CASTING
ANALYTICAL DATA SUMMARY

Ferrous Wet Sand Reclamation - Raw Wastewater

	Pollutant	Number of Samples Analyzed	Number of Times Detected at Quantifiable Levels	Concentration Range (mg/l)	Average Concentration (mg/l)[1]	Average Load (mg/kkg)[2]
001	Acenaphthene	11	2	0.0 - 0.11	0.049	182
034	2,4-Dimethylphenol	11	4	0.0 - 0.116	0.038	1.12
035	2,4-Dinitrotoluene	11	1	0.0 - 0.065	0.032	166
036	2,6-Dinitrotoluene	11	1	0.0 - 0.065	0.032	166
039	Fluorenthene	11	2	0.0 - 0.019	0.008	31.4
044	Methylene chloride	11	4	0.0 - 0.023	0.007	22.8
055	Naphthalene	11	4	0.0 - 0.017	0.009	81.4
065	Phenol	11	6	0.0 - 1.160	0.253	1,310
066	Bis(2-ethylhexyl)phthalate	11	6	0.0 - 0.019	0.013	9.34
068	Di-n-butyl phthalate	11	2	0.0 - 0.028	0.006	22.1
070	Diethyl phthalate	11	1	0.0 - 0.023	0.006	23.9
071	Dimethyl phthalate	11	4	0.011 - 0.055	0.029	61.2
072	Benzo(a)anthracene	11	2	0.012 - 0.014	0.013	57.1
077	Acenaphthylene	11	1	0.0 - 0.028	0.009	61.6
084	Pyrene	11	2	0.0 - 0.027	0.008	32.8
114	Antimony	9	2	0.0 - 0.4	0.089	29.5
115	Arsenic	11	9	0.0 - 0.04	0.018	102
119	Chromium	9	5	0.0 - 0.32	0.111	848
120	Copper	13	13	0.03 - 2.1	0.584	1,160
122	Lead	15	14	0.0 - 2.2	0.728	1,560
124	Nickel	13	10	0.0 - 0.95	0.241	540
128	Zinc	15	15	0.23 - 14	3.18	5,220

Table V-43 (Continued)

METAL MOLDING AND CASTING
ANALYTICAL DATA SUMMARY

Ferrous Wet Sand Reclamation - Raw Wastewater

Pollutant	Number of Samples Analyzed	Number of Times Detected at Quantifiable Levels	Concentration Range (mg/l)	Average Concentration (mg/l)[1]	Average Load (mg/kkg)[2]
Aluminum	15	15	9.4 - 250	54	258,000
Ammonia (N)	15	15	0.1575 - 11	4.27	24,000
Cobalt	3	3	0.006 - 0.022	0.013	208
Iron	21	21	7.2 - 750	139	586,000
Manganese	15	15	0.445 - 10	1.82	7,790
Oil & Grease	11	11	1 - 27.7	7.66	58,400
Phenols (4AAP)	18	18	0.0075 - 9.62	0.99	5,860
Suspended Solids	21	21	210 - 28,010	5,089	34,300,000

[1] Straight average of available analytical data. Concentrations have not been normalized to account for flow rates and degree of recycle at sampled plants.

[2] Normalized mass of pollutant generated per unit of production.

Table V-44

METAL MOLDING AND CASTING
ANALYTICAL DATA SUMMARY

Magnesium Grinding Scrubber - Raw Wastewater

	Pollutant	Number of Samples Analyzed	Number of Times Detected at Quantifiable Levels	Concentration Range (mg/l)	Average Concentration (mg/l)[1]	Average Load ($mg/1000m^3$)[2]
044	Methylene chloride	3	2	0.012 - 0.150	0.081	2.98
066	Bis(2-ethylhexyl)phthalate	3	2	0.0 - 0.195	0.070	2.58
128	Zinc	3	3	0.38 - 1.70	1.16	42.7
	Manganese	3	3	0.08 - 0.42	0.28	10.3
	Oil & Grease	3	3	1 - 11	4.3	158
	Phenol (4AAP)	3	3	0.010 - 0.029	0.017	0.626
	Suspended Solids	3	3	10 - 63	36	1,320

[1] Straight average of available analytical data. Concentrations have not been normalized to account for flow rates and degree of recycle at sampled plants.

[2] Normalized mass of pollutant generated per unit of production.

METAL MOLDING AND CASTING
ANALYTICAL DATA SUMMARY

Zinc Casting Quench - Raw Wastewater

Pollutant	Number of Samples Analyzed	Number of Times Detected at Quantifiable Levels	Concentration Range (mg/l)	Average Concentration (mg/l)[1]	Average Load (mg/kkg)[2]
001 Acenaphthene	4	1	0.0 - 0.01	0.005	0.578
021 2,4,6-Trichlorophenol	4	3	0.051 - 0.13	0.084	2.62
022 Parachlorometacresol	4	1	0.051	0.051	0.489
024 2-Chlorophenol	4	1	0.019	0.019	2.20
031 2,4-Dichlorophenol	4	4	0.01 - 0.03	0.019	0.845
034 2,4-Dimethylphenol	4	3	0.018 - 0.12	0.055	4.78
039 Fluoranthene	4	3	0.02 - 0.026	0.024	0.934
044 Methylene chloride	4	1	0.0 - 0.021	0.011	1.22
058 4-Nitrophenol	4	1	1.6	1.6	186
059 2,4-Dinitrophenol	4	1	0.0 - 0.9	0.45	52.2
065 Phenol	4	4	0.011 - 0.051	0.029	0.578
066 Bis(2-ethyl hexyl)phthalate	4	4	0.018 - 0.081	0.056	2.42
067 Butyl benzyl phthalate	4	1	0.0 - 0.012	0.004	0.467
068 Di-n-butyl phthalate	4	1	0.0 - 0.05	0.013	0.111
070 Diethyl phthalate	4	2	0.01 - 0.02	0.015	0.667
085 Tetrachloroethylene	4	1	0.0 - 0.02	0.01	0.089
120 Copper	3	3	0.06 - 0.16	0.10	6.65
124 Nickel	3	3	0.02 - 0.04	0.027	1.67
128 Zinc	4	4	3.1 - 350	90	10,200

Table V-45 (Continued)

METAL MOLDING AND CASTING
ANALYTICAL DATA SUMMARY

Zinc Casting Quench - Raw Wastewater

Pollutant	Number of Samples Analyzed	Number of Times Detected at Quantifiable Levels	Concentration Range (mg/l)	Average Concentration (mg/l)[1]	Average Load (mg/kkg)[2]
Aluminum	4	4	0.1 - 3.5	0.98	103
Iron	4	4	0.07 - 6.6	1.8	193
Manganese	4	4	0.06 - 0.29	0.12	8.90
Oil & Grease	4	4	19 - 81	38	2,530
Phenols (4AAP)	4	4	0.02 - 0.111	0.073	3.67
Suspended Solids	4	4	8 - 94	56	3,040

[1]Straight average of available analytical data. Concentrations have not been normalized to account for flow rates and degree of recycle at sampled plants.

[2]Normalized mass of pollutant generated per unit of production.

Table V-46

METAL MOLDING AND CASTING
ANALYTICAL DATA SUMMARY

Zinc Die Casting - Raw Wastewater

Pollutant	Number of Samples Analyzed	Number of Times Detected at Quantifiable Levels	Concentration Range (mg/l)	Average Concentration[1] (mg/l)	Average Load (mg/kkg)[2]
001 Acenaphthene	4	1	2.5	2.5	22,400
004 Benzene	4	1	0.0 - 0.015	0.05	24
006 Carbon tetrachloride	4	1	0.0 - 0.029	0.01	4.66
011 1,1,1-Trichloroethane	4	1	0.0 - 0.044	0.015	7.08
021 2,4,6-Trichlorophenol	4	1	0.092	0.092	825
022 Parachlorometacresol	4	3	0.0 - 0.4	0.13	1,120
023 Chloroform	4	1	0.0 - 0.067	0.017	7.95
024 2-Chlorophenol	4	1	0.0 - 0.21	0.105	50.3
030 1,2-trans-Dichloroethylene	4	1	0.043	0.043	20.6
034 2,4-Dimethylphenol	4	1	0.0 - 0.032	0.008	3.80
038 Ethylbenzene	4	1	0.018	0.018	161
044 Methylene chloride	4	2	0.0 - 0.3	0.08	58.4
055 Naphthalene	4	2	0.014 - 0.06	0.037	77.2
065 Phenol	4	1	0.0 - 0.46	0.15	73.4
066 Bis(2-ethyl hexyl)phthalate	4	4	0.21 - 4.3	1.5	4,050
068 Di-n-butyl phthalate	4	4	0.2 - 0.3	0.25	1,790
069 Di-n-octyl phthalate	4	1	2.8	2.8	1,340
070 Diethyl phthalate	4	2	0.078 - 13	6.5	58,700
072 Benzo(a)anthracene	4	1	0.075	0.075	672
076 Chrysene	4	1	0.055	0.055	493
078 Anthracene	4	1	0.5	0.5	4,490
081 Phenanthrene	4	1	0.5	0.5	4,490
084 Pyrene	4	1	0.016	0.016	143
085 Tetrachloroethylene	4	4	0.021 - 0.142	0.083	443
086 Toluene	4	2	0.012 - 0.027	0.020	60.3

Table V-46 (Continued)

METAL MOLDING AND CASTING
ANALYTICAL DATA SUMMARY

Zinc Die Casting - Raw Wastewater

Pollutant	Number of Samples Analyzed	Number of Times Detected at Quantifiable Levels	Concentration Range (mg/l)	Average Concentration (mg/l)[1]	Average Load (mg/kkg)[2]
087 Trichloroethylene	4	2	0.0 - 0.23	0.063	74.6
106-108 PCB 1242, 1254, 1221	2	1	0.0 - 0.050	0.025	*
109-112 PCB 1232, 1248, 1260, 1016	2	1	0.0 - 0.056	0.028	*
120 Copper	3	3	0.1 - 0.2	0.13	1,200
122 Lead	4	4	0.09 - 0.42	0.28	2,370
128 Zinc	4	4	2.3 - 62	18	27,200
Aluminum	4	4	2.8 - 5.1	3.7	22,600
Iron	4	4	0.93 - 6.9	2.6	9,100
Manganese	4	4	0.1 - 0.25	0.16	1,030
Oil & Grease	4	4	759 - 17,100	5,240	10,700,000
Phenols (4AAP)	4	4	0.035 - 1.42	0.441	941
Suspended Solids	4	4	604 - 3,800	1,460	5,060,000

[1]Straight average of available analytical data. Concentrations have not been normalized to account for flow rates and degree of recycle at sampled plants.

[2]Normalized mass of pollutant generated per unit of production.

*Average load is not availeble.

Table V-47

LIST OF 129 PRIORITY POLLUTANTS

Compound Name	Type of Compound
1. acenaphthene	Base/Neutral
2. acrolein	Volatile
3. acrylonitrile	Volatile
4. benzene	Volatile
5. benzidene	Base/Neutral
6. carbon tetrachloride	Volatile
Chlorinated benzenes (other than dichlorobenzenes)	
7. chlorobenzene	Volatile
8. 1,2,4-trichlorobenzene	Base/Neutral
9. hexachlorobenzene	Base/Neutral
Chlorinated ethanes (including 1,2-dichloroethane, 1,1,1-trichloroethane, and hexachloroethane)	
10. 1,2-dichloroethane	Volatile
11. 1,1,1-trichloroethane	Volatile
12. hexachloroethane	Base/Neutral
13. 1,1-dichloroethane	Volatile
14. 1,1,2-trichloroethane	Volatile
15. 1,1,2,2-tetrachloroethane	Volatile
16. chloroethane	Volatile
Chloroalkyl ethers (chloromethyl, chloroethyl, and mixed ethers)	
17. bis(chloromethyl) ether (deleted)	Volatile
18. bis(2-chloroethyl) ether	Base/Neutral
19. 2-chloroethyl vinyl ether	Volatile
Chlorinated naphthalene	
20. 2-chloronaphthalene	Base/Neutral
Chlorinated phenols (other than those listed elsewhere; includes trichlorophenols and chlorinated cresols)	
21. 2,4,6-trichlorophenol	Acid
22. para-chloro-meta-cresol	Acid
23. chloroform	Volatile
24. 2-chlorophenol	Acid

Table V-47 (Continued)

LIST OF 129 PRIORITY POLLUTANTS

Compound Name	Type of Compound
Dichlorobenzenes	
25. 1,2-dichlorobenzene	Base/Neutral
26. 1,3-dichlorobenzene	Base/Neutral
27. 1,4-dichlorobenzene	Base/Neutral
Dichlorobenzidine	
28. 3,3'-dichlorobenzidine	Base/Neutral
Dichloroethylenes (1,1-dichloroethylene and 1,2-dichloroethylene)	
29. 1,1-dichloroethylene	Volatile
30. 1,2-*trans*-dichloroethylene	Volatile
31. 2,4-dichlorophenol	Acid
Dichloropropane and dichloropropene	
32. 1,2-dichloropropane	Volatile
33. 1,2-dichloropropylene	Volatile
34. 2,4-dimethylphenol	Acid
Dinitrotoluene	
35. 2,4-dinitrotoluene	Base/Neutral
36. 2,6-dinitrotoluene	Base/Neutral
37. 1,2-diphenylhydrazine	Base/Neutral
38. ethylbenzene	Volatile
39. fluoranthene	Base/Neutral
Haloethers (other than those listed elsewhere)	
40. 4-chlorophenyl phenyl ether	Base/Neutral
41. 4-bromophenyl phenyl ether	Base/Neutral
42. bis(2-chloroisopropyl) ether	Base/Neutral
43. bis(2-chloroethoxy) methane	Base/Neutral
Halomethanes (other than those listed elsewhere)	
44. methylene chloride	Volatile
45. methyl chloride	Volatile
46. methyl bromide	Volatile

Table V-47 (Continued)

LIST OF 129 PRIORITY POLLUTANTS

Compound Name	Type of Compound
Halomethanes (other than those listed elsewhere) (Cont.)	
47. bromoform	Volatile
48. dichlorobromomethane	Volatile
49. trichlorofluoromethane (deleted)	Volatile
50. dichlorodifluoromethane (deleted)	Volatile
51. chlorodibromomethane	Volatile
52. hexachlorobutadiene	Base/Neutral
53. hexachlorocyclopentadiene	Base/Neutral
54. isophorone	Base/Neutral
55. naphthalene	Base/Neutral
56. nitrobenzene	Base/Neutral
Nitrophenols (including 2,4-dinitrophenol and dinitrocresol)	
57. 2-nitrophenol	Acid
58. 4-nitrophenol	Acid
59. 2,4-dinitrophenol	Acid
60. 4,6-dinitro-o-cresol	Acid
Nitrosamines	
61. N-nitrosodimethylamine	Base/Neutral
62. N-nitrosodiphenylamine	Base/Neutral
63. N-nitrosodi-n-propylamine	Base/Neutral
64. pentachlorophenol	Acid
65. phenol	Acid
Phthalate esters	
66. bis(2-ethylhexyl) phthalate	Base/Neutral
67. butyl benzyl phthalate	Base/Neutral
68. di-n-butyl phthalate	Base/Neutral
69. di-n-octyl phthalate	Base/Neutral
70. diethyl phthalate	Base/Neutral
71. dimethyl phthalate	Base/Neutral
Polynuclear aromatic hydrocarbons	
72. benzo(a)anthracene	Base/Neutral
73. benzo(a)pyrene	Base/Neutral
74. 3,4-benzofluoranthene	Base/Neutral
75. benzo(k)fluoranthene	Base/Neutral

Table V-47 (Continued)

LIST OF 129 PRIORITY POLLUTANTS

Compound Name	Type of Compound
Polynuclear aromatic hydrocarbons (Cont.)	
76. chrysene	Base/Neutral
77. acenaphthylene	Base/Neutral
78. anthracene	Base/Neutral
79. benzo(ghi)perylene	Base/Neutral
80. fluorene	Base/Neutral
81. phenanthrene	Base/Neutral
82. dibenzo(a,h)anthracene	Base/Neutral
83. indeno(1,2,3-c,d)pyrene	Base/Neutral
84. pyrene	Base/Neutral
85. tetrachloroethylene	Volatile
86. toluene	Volatile
87. trichloroethylene	Volatile
88. vinyl chloride	Volatile
Pesticides and metabolites	
89. aldrin	Pesticide
90. dieldrin	Pesticide
91. chlordane	Pesticide
DDT and metabolites	
92. 4,4'-DDT	Pesticide
93. 4,4'-DDE	Pesticide
94. 4,4'-DDD	Pesticide
Endosulfan and metabolites	
95. Alpha-endosulfan	Pesticide
96. Beta-endosulfan	Pesticide
97. endosulfan sulfate	Pesticide
Endrin and metabolites	
98. endrin	Pesticide
99. endrin aldehyde	Pesticide
Heptachlor and metabolites	
100. heptachlor	Pesticide
101. heptachlor epoxide	Pesticide

Table V-47 (Continued)

LIST OF 129 PRIORITY POLLUTANTS

Compound Name	Type of Compound
Hexachlorocyclohexane (all isomers)	
102. Alpha-BHC	Pesticide
103. Beta-BHC	Pesticide
104. Gamma-BHC	Pesticide
105. Delta-BHC	Pesticide
Polychlorinated biphenyls (PCB's)	
106. PCB-1242	Pesticide
107. PCB-1254	Pesticide
108. PCB-1221	Pesticide
109. PCB-1232	Pesticide
110. PCB-1248	Pesticide
111. PCB-1260	Pesticide
112. PCB-1016	Pesticide
Metals, Cyanide and Asbestos	
114. antimony	Inorganic
115. arsenic	Inorganic
116. asbestos	Inorganic
117. beryllium	Inorganic
118. cadmium	Inorganic
119. chromium	Inorganic
120. copper	Inorganic
121. cyanide	Inorganic
122. lead	Inorganic
123. mercury	Inorganic
124. nickel	Inorganic
125. selenium	Inorganic
126. silver	Inorganic
127. thallium	Inorganic
128. zinc	Inorganic
Other	
113. toxaphene	Pesticide
129. 2,3,7,8-tetra chlorodibenzo-p-dioxin (TCDD)	Base/Neutral

Table V-48

NON-PRIORITY POLLUTANTS ANALYZED FOR
DURING MM&C SAMPLING EFFORTS

Acidity, free	Nitrogen
Acidity, total	Total Phenols (4-AAP)
Alkalinity (Methyl Orange)	Potassium
Alkalinity (Phenolphthalein)	Silica, Soluble
Aluminum	Sodium
Ammonia-N	Sulfate
Calcium	Sulfide
Carbon, Organic	Temperature
Chloride	Thiocyanate
Cyanate	Tin
Fluoride	Oil and Grease
Hardness	Solids, Dissolved
Iron	Solids, Suspended
Magnesium	Solids, Volatile
Manganese	pH

Table V-49

SUMMARY OF SAMPLING ACTIVITIES

Plant Number	Year Sampled	Pollutants for Which Analyses were Performed: Priority Organics: Extractables[1]	Priority Organics: Volatiles	Priority Organics: Pesticides	Priority Inorganics[2]	Conventionals and Nonconventionals: Oil & Grease	Total Phenols	Suspended Solids	Al	Fe	Mg
00001	1978	X	X	X	All	X	X	X	X	X	X
00002	1978	X	X	X	All	X	X	X	X	X	X
04622	1978	X	X	X	CN^-, Pb, Zn	X	X	X	X	X	X
04704	1978	X	X	X	Cr, Cu, CN^-, Pb, Hg, Ni, Se, Zn	X	X	X	X	X	X
04736	1978	X	X	X	All	X	X	X	X	X	X
06809	1978	X	X	X	As, CN^-, Pb, Se, Ag, Tl, Zn	X	X	X	X	X	X
06956	1978	X	X	X	All	X	X	X	X	X	X
07170	1978				CN^-, Pb, Zn	X	X	X	X	X	X
07929	1978	X	X	X	CN^-, Pb, Zn	X	X	X	X	X	X
08146	1978	X	X	X	Cu, CN^-, Pb, Hg, Se, Zn	X	X	X	X		
09094	1978	X	X	X	As, CN^-, Pb, Se, Ag, Tl, Zn	X	X	X	X	X	X
09841	1983				All	X	X	X	X	X	X
10308	1978	X	X	X	Cr, Cu, CN^-, Pb, Hg, Ni, Se, Zn	X	X	X	X	X	X
10837	1983				All	X	X	X	X	X	X
12040	1978	X	X	X	Cr, Cu, CN^-, Pb, Hg, Ni, Se, Zn	X	X	X	X	X	X
15265	1983	X	X		All	X	X	X	X	X	X
15520	1978	X	X	X	All	X	X	X	X	X	X
15654	1978	X	X	X	All	X	X	X	X	X	X
17089	1978	X	X	X	As, CN^-, Pb, Se, Ag, Tl, Zn	X	X	X	X	X	X
17230	1983				All	X	X	X	X	X	X
18139	1978	X	X	X	As, CN^-, Pb, Se, Ag, Tl, Zn	X	X	X	X	X	X
19872	1978	X	X	X	Cd, Cr, Cu, CN^-, Pb, Hg, Ni, Se, Zn	X	X	X	X	X	X
20007	1983	X	X		All		X	X	X	X	X
20009	1978	X	X	X	All	X	X	X	X	X	X
20017	1983				All	X	X	X	X	X	X
20147	1978	X	X	X	Cr, Cu, CN^-, Pb, Hg, Ni, Se, Zn	X	X	X	X	X	X
50000	1983				All	X	X	X	X	X	X
50315	1974				Be, Cu, CN^-, Pb, Hg, Ni, Zn	X	X	X	X	X	
51026	1974				Be, CN^-, Hg		X	X	X	X	
51115	1974				Cu, Pb, Hg, Ni, Zn			X	X	X	
51473	1974				Be, Cu, CN^-, Pb, Hg, Ni, Zn	X	X	X	X	X	
52491	1974				Be, CN^-, Hg	X	X	X	X	X	
52881	1974				Be, CN^-, Hg		X	X	X	X	
53219	1974				Be, Cu, CN^-, Pb, Hg, Ni, Zn	X	X	X	X	X	

Table V-49 (Continued)

SUMMARY OF SAMPLING ACTIVITIES

Plant Number	Year Sampled	Pollutants for Which Analyses were Performed									
		Priority Organics				Conventionals and Nonconventionals					
		Extractables[1]	Volatiles	Pesticides	Priority Inorganics[2]	Oil & Grease	Total Phenols	Suspended Solids	Al	Fe	Mg
53642	1974				Cu, Pb, Hg, Ni, Zn	X	X	X	X	X	
54321	1974				Be, CN^-, Hg		X	X	X	X	
55122	1974				Cu, Pb, Hg, Ni, Zn		X	X	X	X	
55217	1974				Be, Cu, CN^-, Pb, Hg, Ni, Zn	X	X	X	X	X	
56123	1974				Be, Cu, CN^-, Pb, Hg, Ni, Zn	X	X	X	X	X	
56771	1974				Be, CN^-, Hg		X	X	X	X	
56789	1974				Be, Cu, CN^-, Pb, Hg, Ni, Zn	X	X	X	X	X	
57100	1974				Be, CN^-	X	X	X	X	X	X
57775	1974				Be, Cu, CN^-, Pb, Hg, Ni, Zn	X	X	X	X	X	
58589	1974				Be, Cu, CN^-, Pb, Hg, Ni, Zn	X	X	X	X	X	
59101	1974				Be, CN^-, Hg	X	X	X	X	X	
59212	1974				Be, CN^-, Hg		X	X	X	X	

[1] Extractables comprise acid compounds and base/neutral compounds.

[2] All inorganics include Sb, As, Be, Cd, Cr, Cu, CN^-, Pb, Hg, Ni, Se, Ag, Tl, Zn

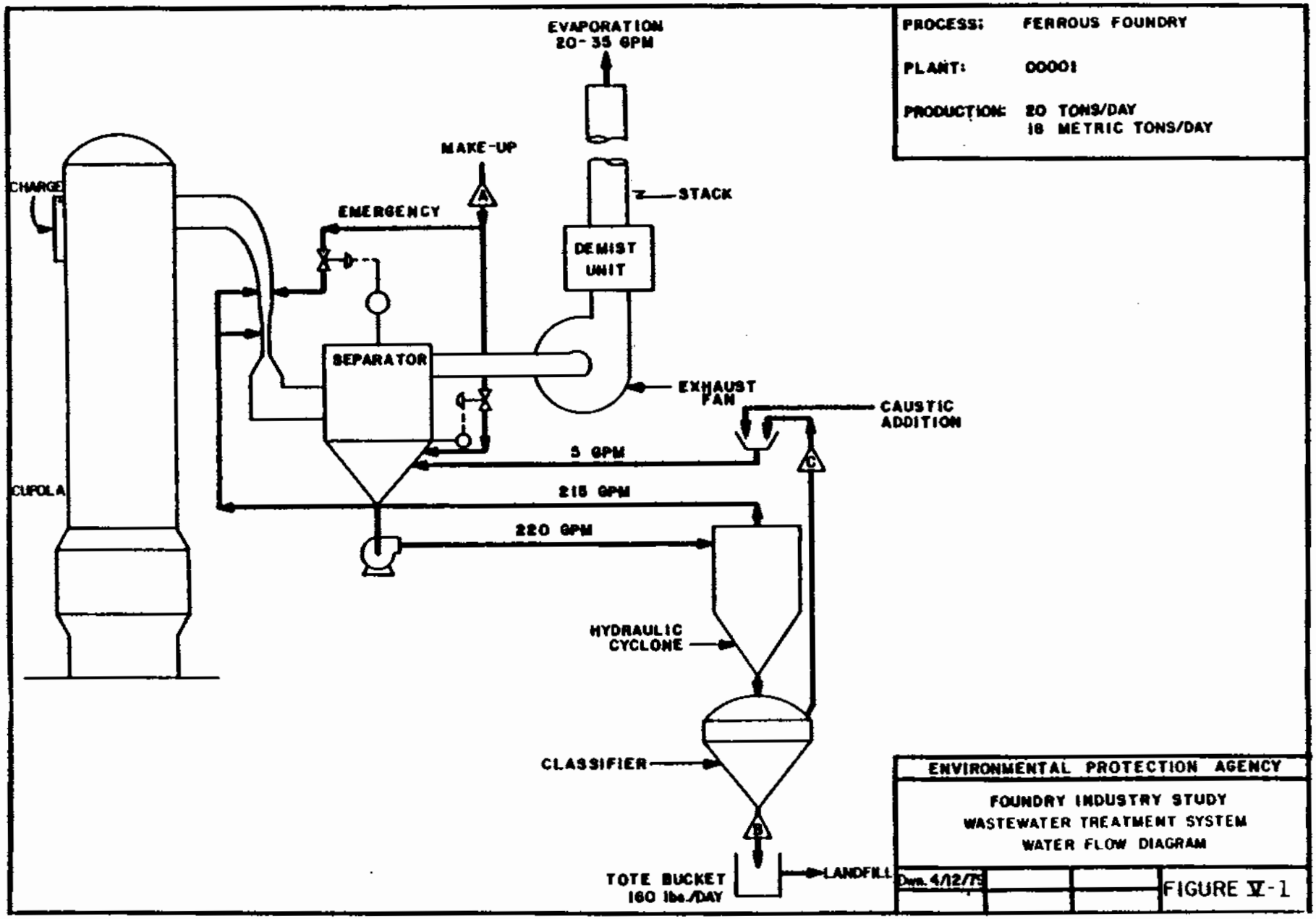
PROCESS: FERROUS FOUNDRY
PLANT: 00001
PRODUCTION: 20 TONS/DAY
18 METRIC TONS/DAY
EVAPORATION
20-35 GPM
MAKE-UP
STACK
EMERGENCY
DEMIST
UNIT
CHARGE
SEPARATOR
EXHAUST
FAN
CAUSTIC
ADDITION
5 GPM
CUPOLA
215 GPM
220 GPM
HYDRAULIC
CYCLONE
CLASSIFIER
TOTE BUCKET
160 lbs./DAY
LANDFILL
ENVIRONMENTAL PROTECTION AGENCY
FOUNDRY INDUSTRY STUDY
WASTEWATER TREATMENT SYSTEM
WATER FLOW DIAGRAM
Dwn. 4/12/75
FIGURE V-1

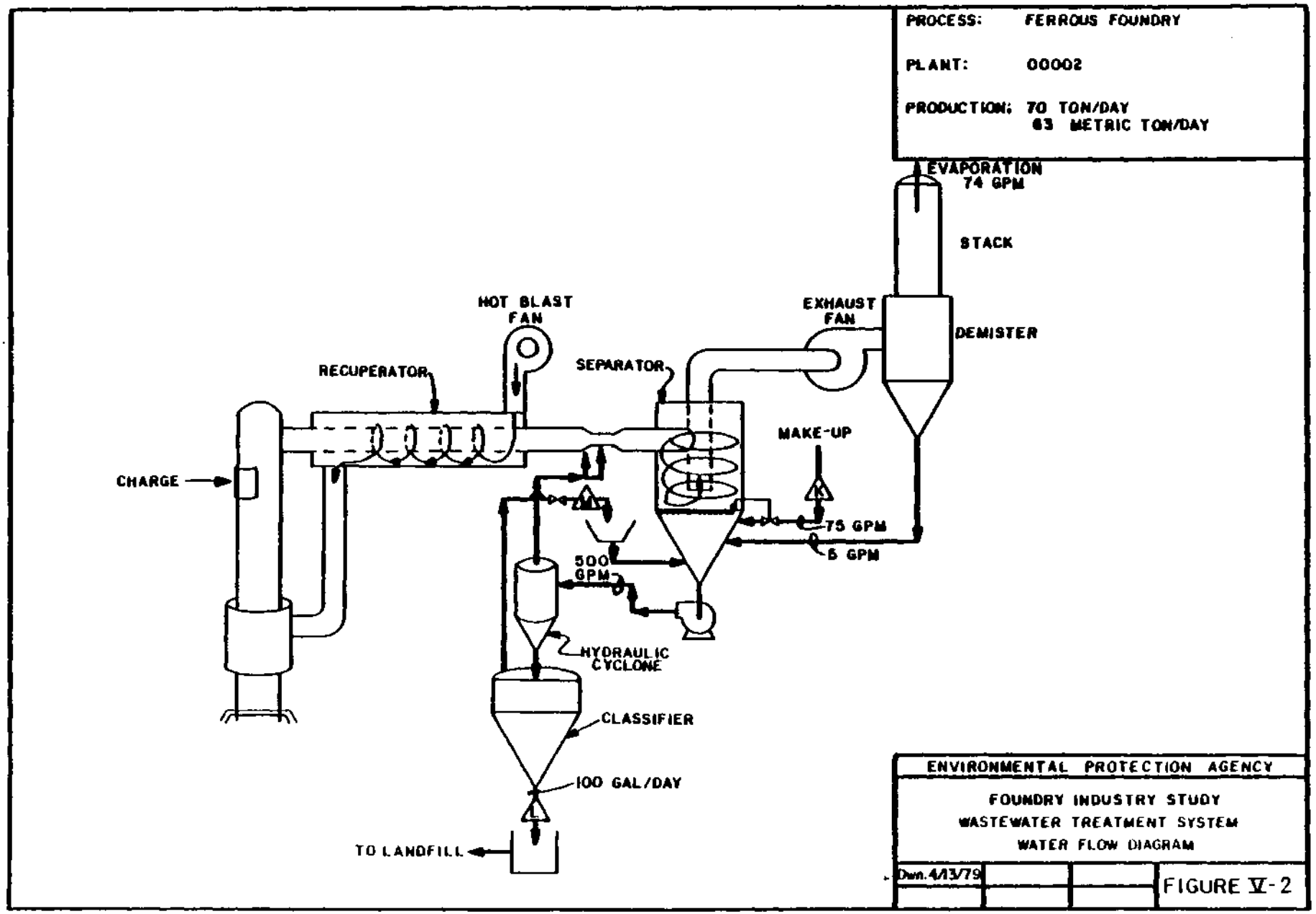
PROCESS: FERROUS FOUNDRY
PLANT: 00002
PRODUCTION: 70 TON/DAY
63 METRIC TON/DAY
EVAPORATION
74 GPM
STACK
DEMISTER
EXHAUST
FAN
HOT BLAST
FAN
RECUPERATOR
SEPARATOR
MAKE-UP
CHARGE
75 GPM
5 GPM
500
GPM
HYDRAULIC
CYCLONE
CLASSIFIER
100 GAL/DAY
TO LANDFILL
ENVIRONMENTAL PROTECTION AGENCY
FOUNDRY INDUSTRY STUDY
WASTEWATER TREATMENT SYSTEM
WATER FLOW DIAGRAM
Dwn. 4/13/79
FIGURE V-2

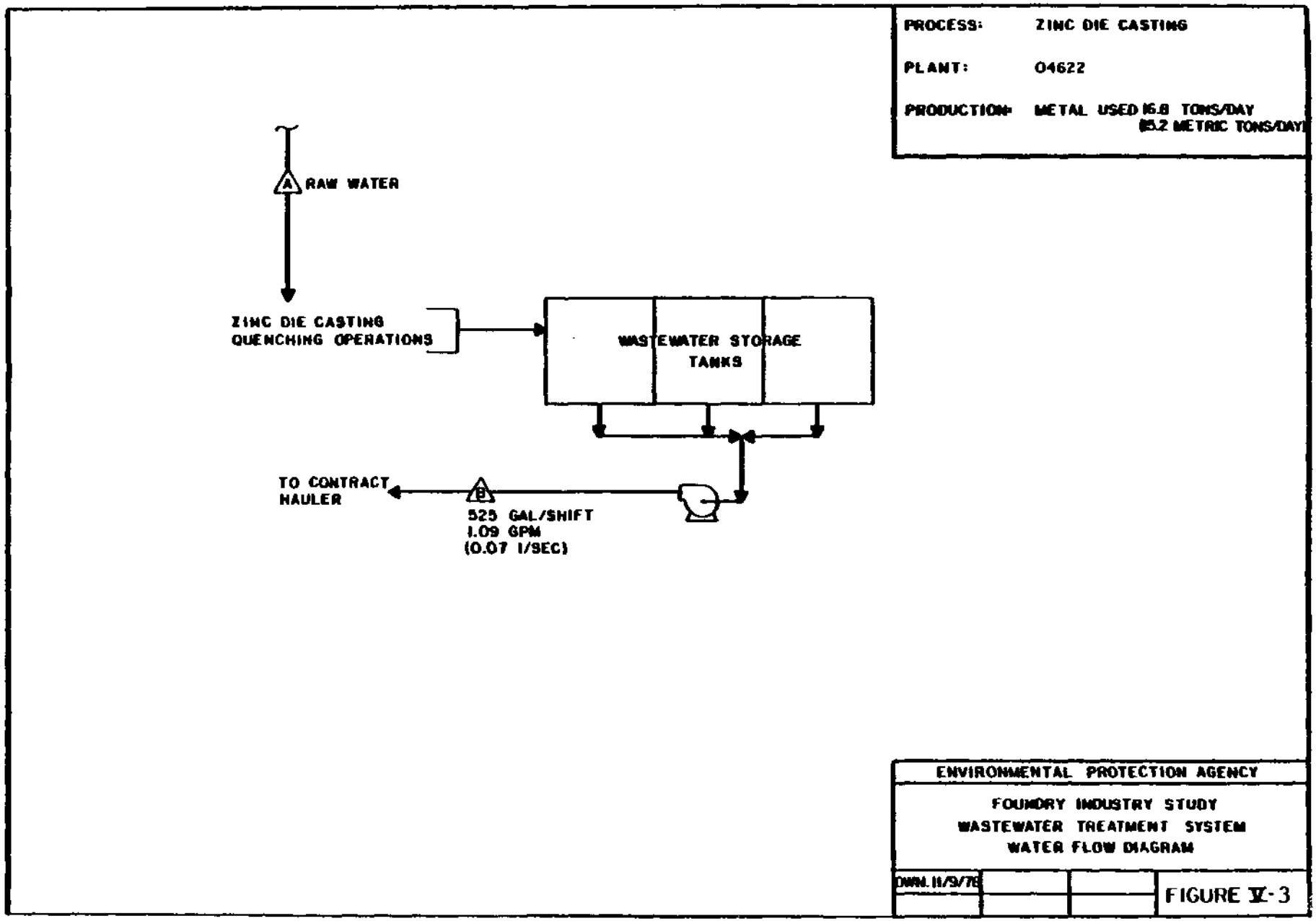
PROCESS: ZINC DIE CASTING
PLANT: 04622
PRODUCTION: METAL USED 16.8 TONS/DAY
(15.2 METRIC TONS/DAY)
A
RAW WATER
ZINC DIE CASTING
QUENCHING OPERATIONS
WASTEWATER STORAGE
TANKS
TO CONTRACT
HAULER
B
525 GAL/SHIFT
1.09 GPM
(0.07 l/SEC)
ENVIRONMENTAL PROTECTION AGENCY
FOUNDRY INDUSTRY STUDY
WASTEWATER TREATMENT SYSTEM
WATER FLOW DIAGRAM
DWN. 11/9/78
FIGURE V-3

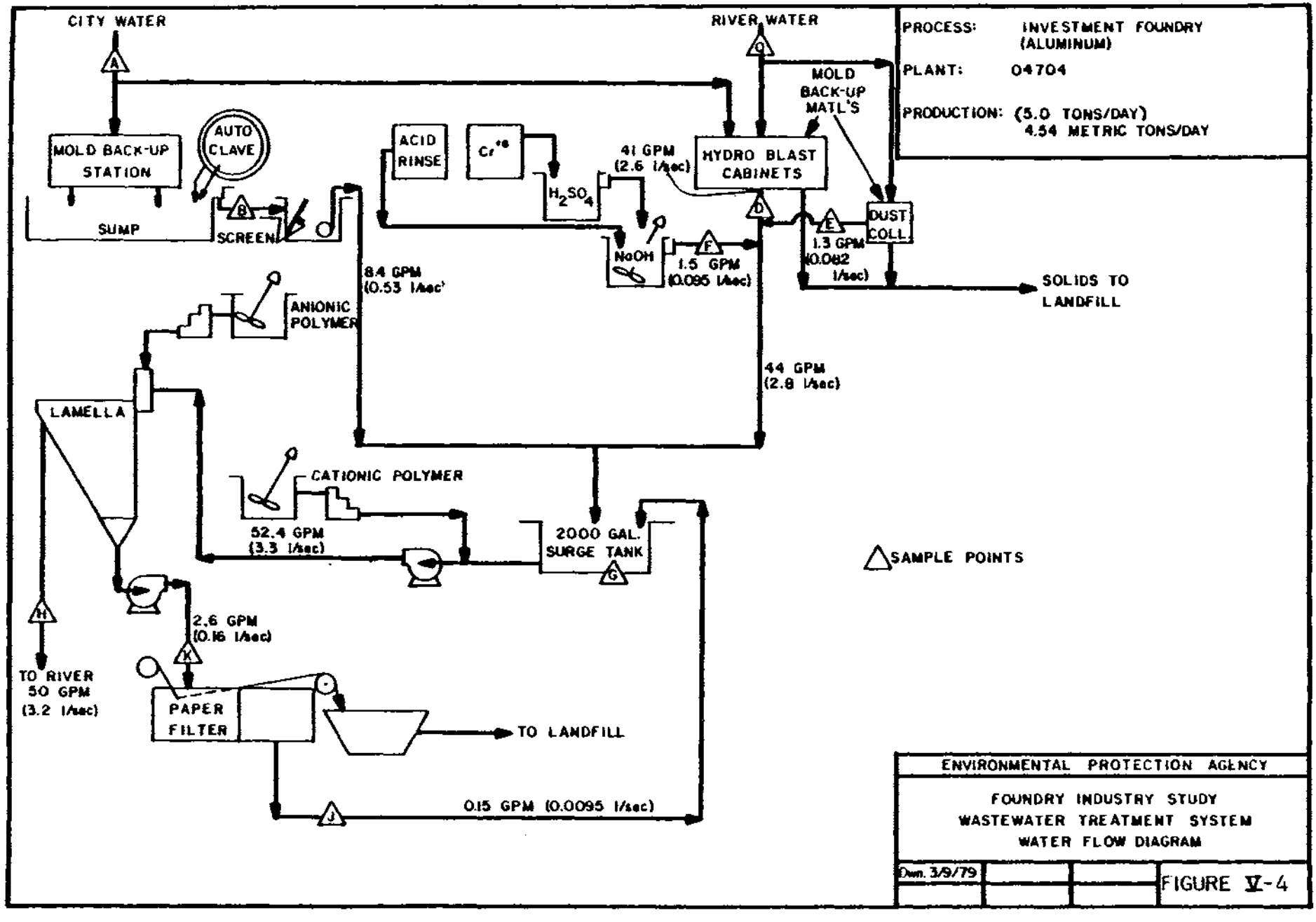
CITY WATER
RIVER WATER
PROCESS: INVESTMENT FOUNDRY (ALUMINUM)
PLANT: 04704
PRODUCTION: (5.0 TONS/DAY) 4.54 METRIC TONS/DAY
MOLD BACK-UP STATION
AUTO CLAVE
MOLD BACK-UP MATL'S
ACID RINSE
Cr^{+6}
H_2SO_4
41 GPM (2.6 l/sec)
HYDRO BLAST CABINETS
DUST COLL.
SUMP
SCREEN
NaOH
1.5 GPM (0.095 l/sec)
1.3 GPM (0.082 l/sec)
SOLIDS TO LANDFILL
8.4 GPM (0.53 l/sec)
ANIONIC POLYMER
44 GPM (2.8 l/sec)
LAMELLA
CATIONIC POLYMER
52.4 GPM (3.3 l/sec)
2000 GAL. SURGE TANK
SAMPLE POINTS
2.6 GPM (0.16 l/sec)
TO RIVER 50 GPM (3.2 l/sec)
PAPER FILTER
TO LANDFILL
0.15 GPM (0.0095 l/sec)
ENVIRONMENTAL PROTECTION AGENCY
FOUNDRY INDUSTRY STUDY
WASTEWATER TREATMENT SYSTEM
WATER FLOW DIAGRAM
Dwn. 3/9/79
FIGURE V-4

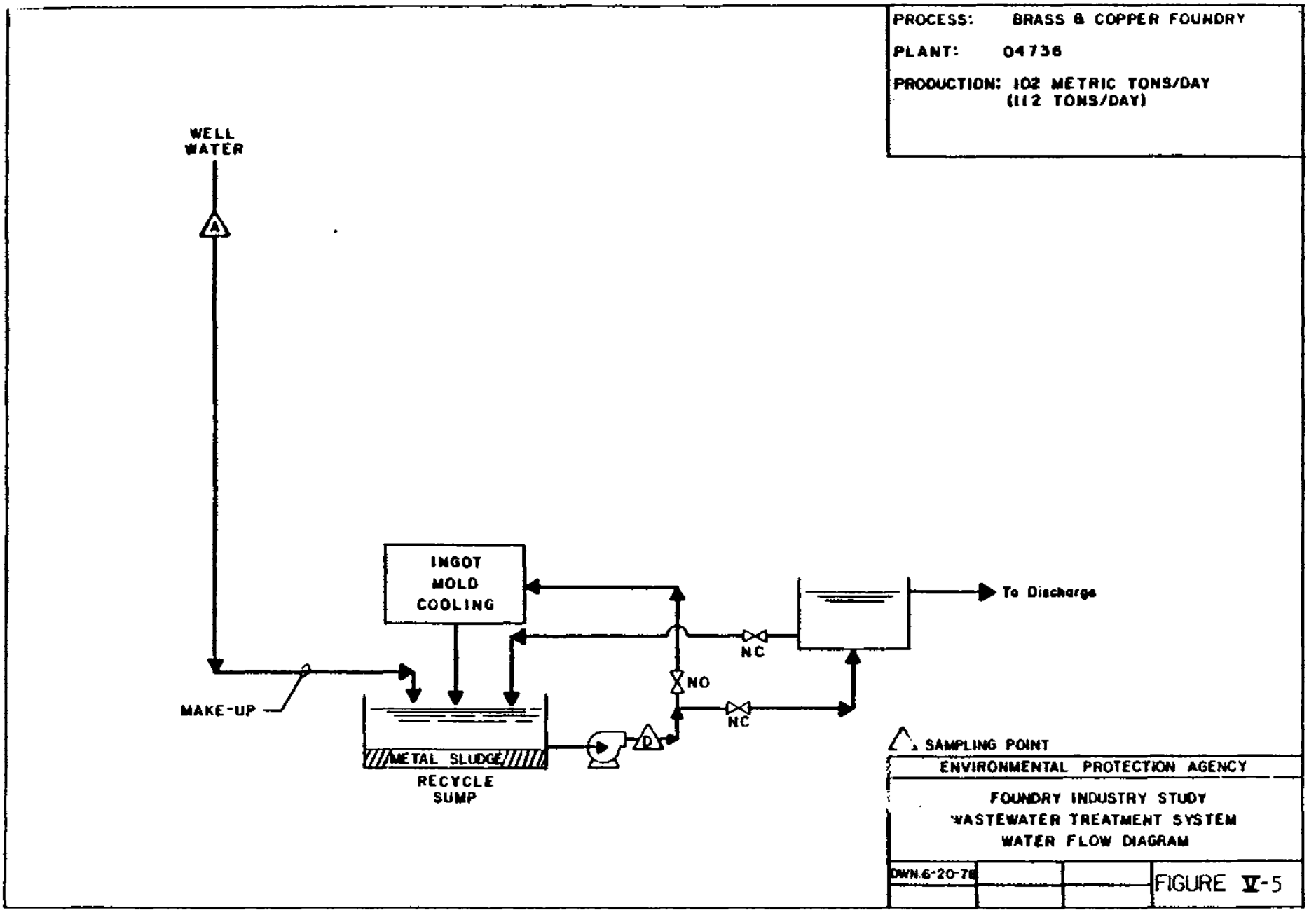
PROCESS: BRASS & COPPER FOUNDRY
PLANT: 04736
PRODUCTION: 102 METRIC TONS/DAY
(112 TONS/DAY)
WELL WATER
A
INGOT MOLD COOLING
To Discharge
NC
NO
NC
MAKE-UP
METAL SLUDGE
RECYCLE SUMP
D
SAMPLING POINT
ENVIRONMENTAL PROTECTION AGENCY
FOUNDRY INDUSTRY STUDY
WASTEWATER TREATMENT SYSTEM
WATER FLOW DIAGRAM
DWN.6-20-78
FIGURE V-5

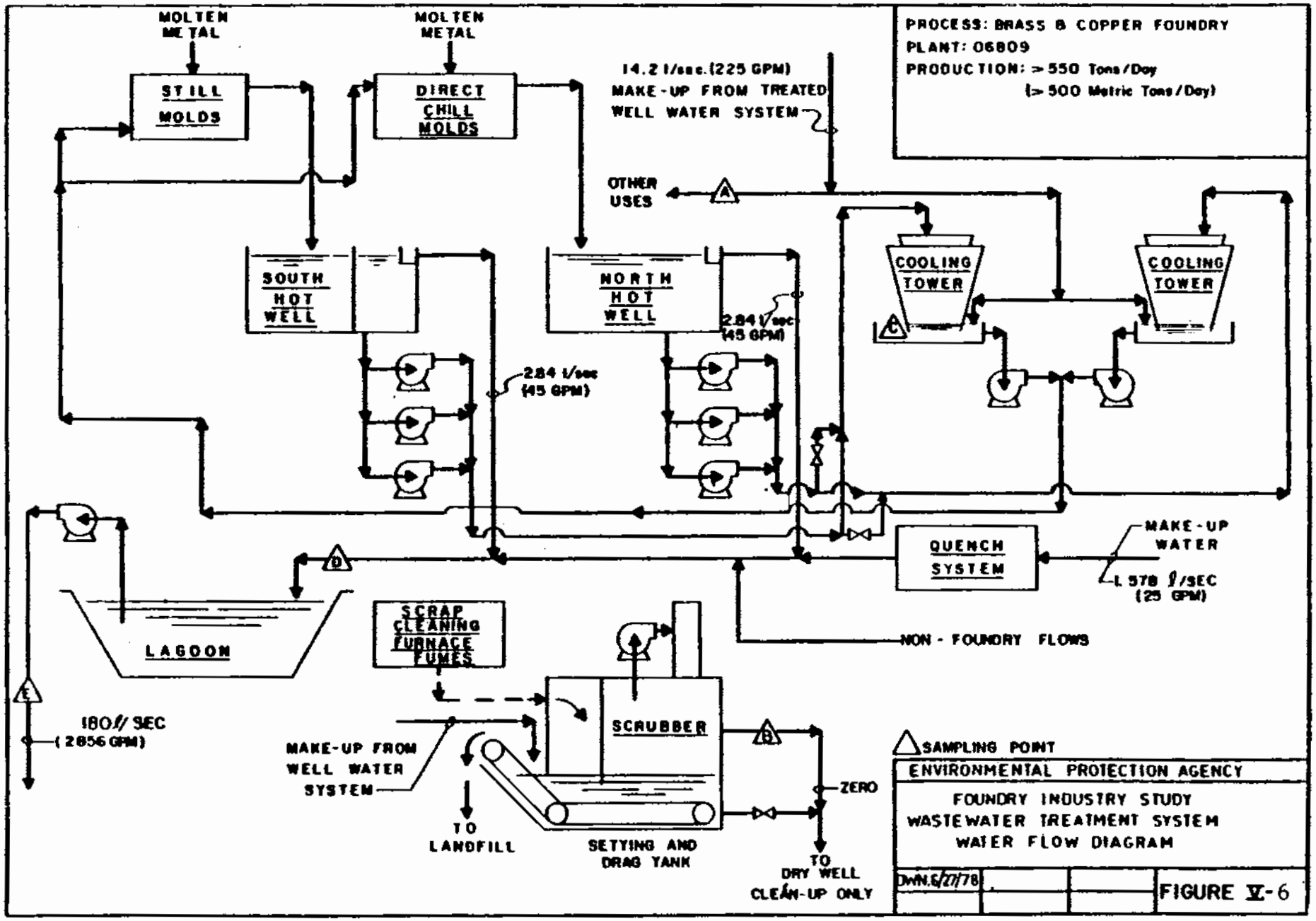
MOLTEN METAL
MOLTEN METAL
STILL MOLDS
DIRECT CHILL MOLDS
14.2 l/sec.(225 GPM) MAKE-UP FROM TREATED WELL WATER SYSTEM
PROCESS: BRASS & COPPER FOUNDRY
PLANT: 06809
PRODUCTION: > 550 Tons/Day
(> 500 Metric Tons/Day)
OTHER USES
A
SOUTH HOT WELL
NORTH HOT WELL
284 l/sec (45 GPM)
284 l/sec (45 GPM)
COOLING TOWER
COOLING TOWER
C
QUENCH SYSTEM
MAKE-UP WATER
L 578 l/SEC (25 GPM)
D
LAGOON
SCRAP CLEANING FURNACE FUMES
NON - FOUNDRY FLOWS
E
180 l/ SEC (2856 GPM)
MAKE-UP FROM WELL WATER SYSTEM
SCRUBBER
B
ZERO
TO LANDFILL
SETTYING AND DRAG TANK
TO DRY WELL CLEAN-UP ONLY
SAMPLING POINT
ENVIRONMENTAL PROTECTION AGENCY
FOUNDRY INDUSTRY STUDY
WASTEWATER TREATMENT SYSTEM
WATER FLOW DIAGRAM
DWN.6/27/78
FIGURE V-6

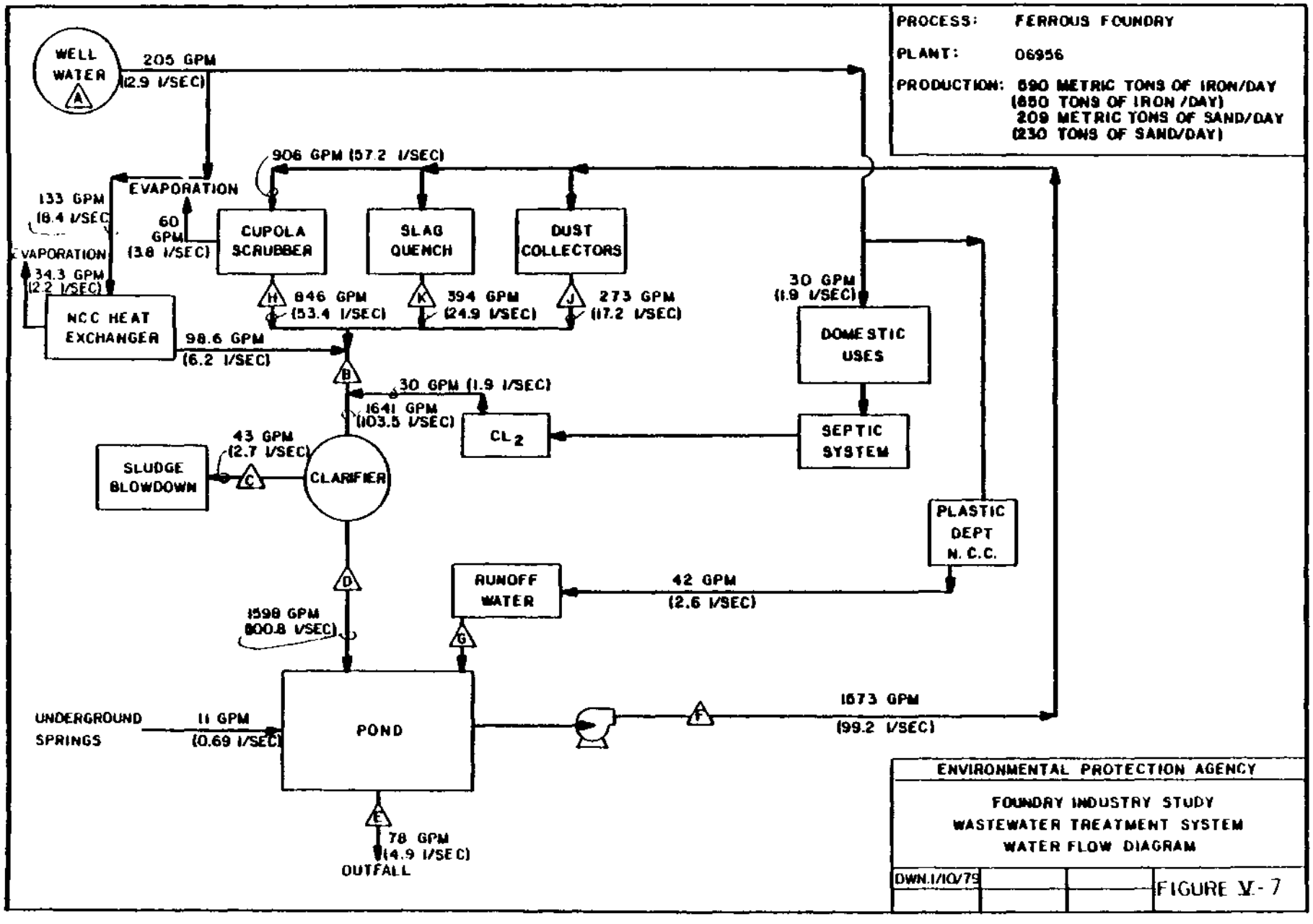
PROCESS: FERROUS FOUNDRY
PLANT: 06956
PRODUCTION: 590 METRIC TONS OF IRON/DAY (650 TONS OF IRON /DAY)
209 METRIC TONS OF SAND/DAY (230 TONS OF SAND/DAY)
WELL WATER
A
205 GPM (12.9 l/SEC)
EVAPORATION
906 GPM (57.2 l/SEC)
133 GPM (8.4 l/SEC)
60 GPM (3.8 l/SEC)
CUPOLA SCRUBBER
SLAG QUENCH
DUST COLLECTORS
EVAPORATION
34.3 GPM (2.2 l/SEC)
NCC HEAT EXCHANGER
H
846 GPM (53.4 l/SEC)
K
394 GPM (24.9 l/SEC)
J
273 GPM (17.2 l/SEC)
30 GPM (1.9 l/SEC)
DOMESTIC USES
98.6 GPM (6.2 l/SEC)
B
30 GPM (1.9 l/SEC)
1641 GPM (103.5 l/SEC)
CL2
SEPTIC SYSTEM
43 GPM (2.7 l/SEC)
SLUDGE BLOWDOWN
C
CLARIFIER
PLASTIC DEPT N. C. C.
D
RUNOFF WATER
42 GPM (2.6 l/SEC)
1598 GPM 100.8 l/SEC)
G
UNDERGROUND SPRINGS
11 GPM (0.69 l/SEC)
POND
F
1673 GPM (99.2 l/SEC)
E
78 GPM (4.9 l/SEC)
OUTFALL
ENVIRONMENTAL PROTECTION AGENCY
FOUNDRY INDUSTRY STUDY
WASTEWATER TREATMENT SYSTEM
WATER FLOW DIAGRAM
DWN.1/10/79
FIGURE V-7

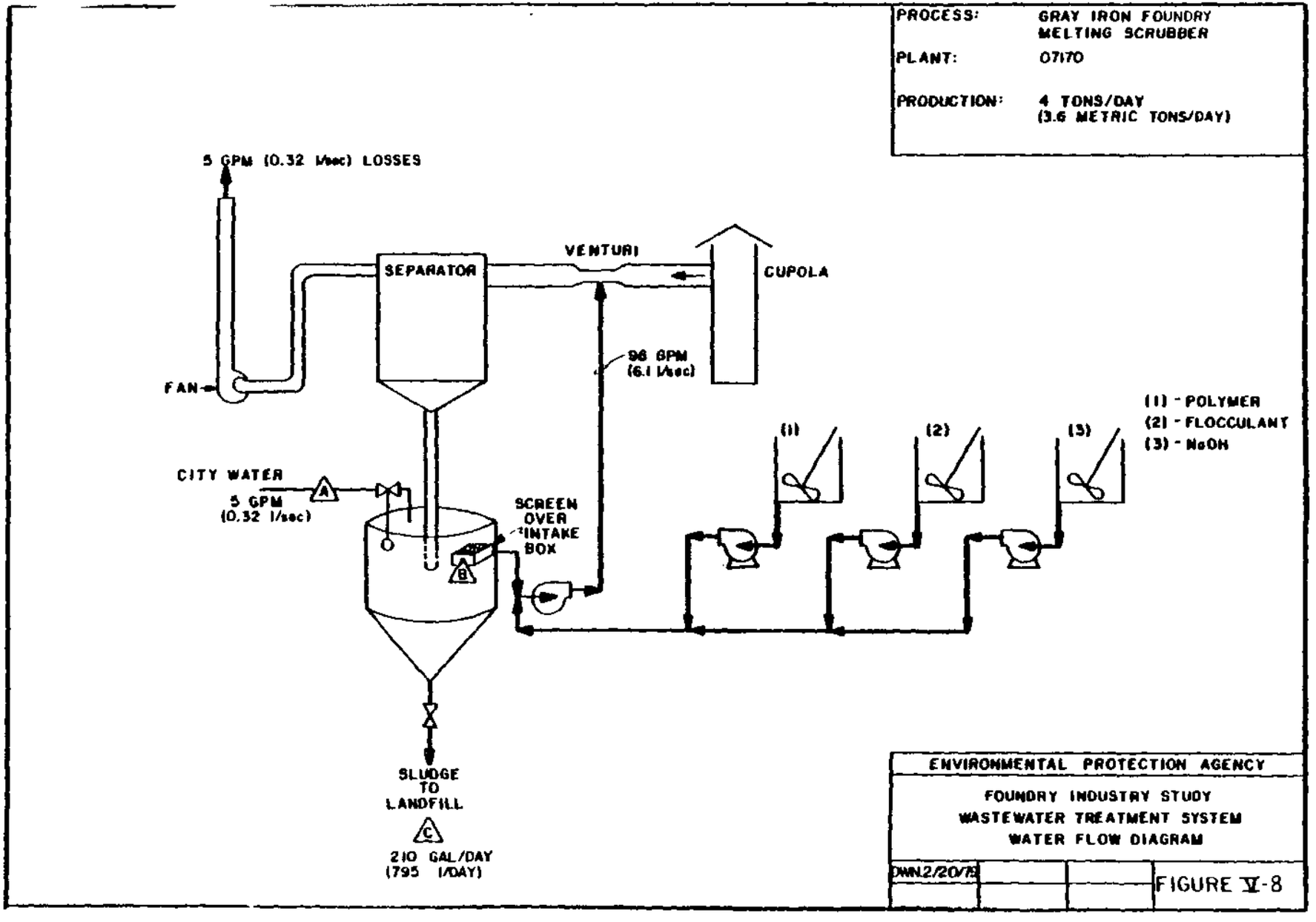
PROCESS: GRAY IRON FOUNDRY MELTING SCRUBBER
PLANT: 07170
PRODUCTION: 4 TONS/DAY (3.6 METRIC TONS/DAY)
5 GPM (0.32 l/sec) LOSSES
SEPARATOR
VENTURI
CUPOLA
FAN
96 GPM (6.1 l/sec)
(1) - POLYMER
(2) - FLOCCULANT
(3) - NaOH
(1)
(2)
(3)
CITY WATER
5 GPM (0.32 l/sec)
A
SCREEN OVER INTAKE BOX
B
SLUDGE TO LANDFILL
C
210 GAL/DAY (795 l/DAY)
ENVIRONMENTAL PROTECTION AGENCY
FOUNDRY INDUSTRY STUDY
WASTEWATER TREATMENT SYSTEM
WATER FLOW DIAGRAM
DWN 2/20/79
FIGURE V-8

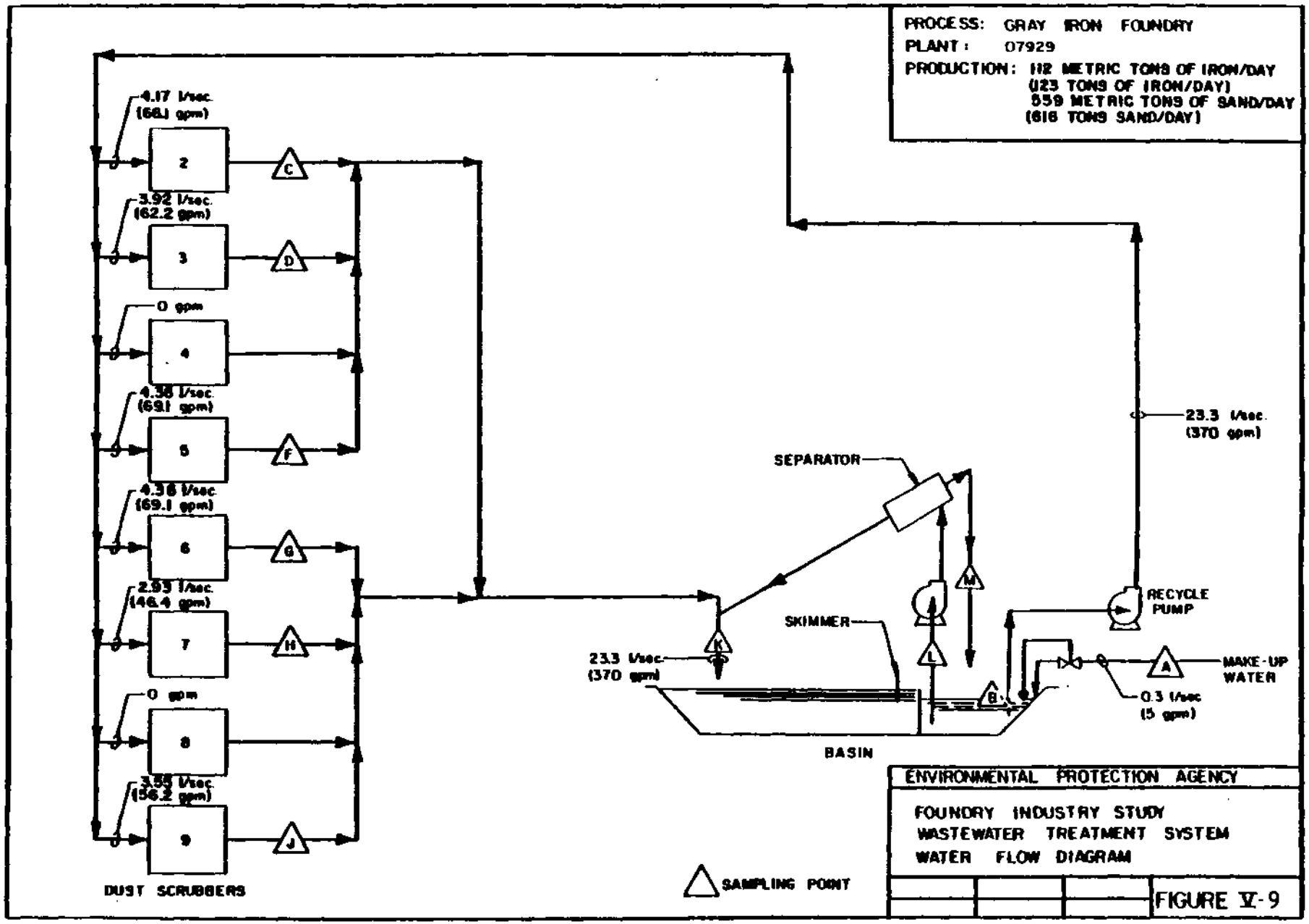
PROCESS: GRAY IRON FOUNDRY
PLANT: 07929
PRODUCTION: 112 METRIC TONS OF IRON/DAY
(123 TONS OF IRON/DAY)
559 METRIC TONS OF SAND/DAY
(616 TONS SAND/DAY)
4.17 l/sec. (66.1 gpm)
3.92 l/sec. (62.2 gpm)
0 gpm
4.36 l/sec. (69.1 gpm)
4.36 l/sec. (69.1 gpm)
2.93 l/sec. (46.4 gpm)
0 gpm
3.55 l/sec. (56.2 gpm)
2
3
4
5
6
7
8
9
C
D
F
G
H
J
DUST SCRUBBERS
23.3 l/sec. (370 gpm)
SEPARATOR
SKIMMER
23.3 l/sec. (370 gpm)
K
L
M
B
A
RECYCLE PUMP
MAKE-UP WATER
0.3 l/sec. (5 gpm)
BASIN
SAMPLING POINT
ENVIRONMENTAL PROTECTION AGENCY
FOUNDRY INDUSTRY STUDY
WASTEWATER TREATMENT SYSTEM
WATER FLOW DIAGRAM
FIGURE V-9

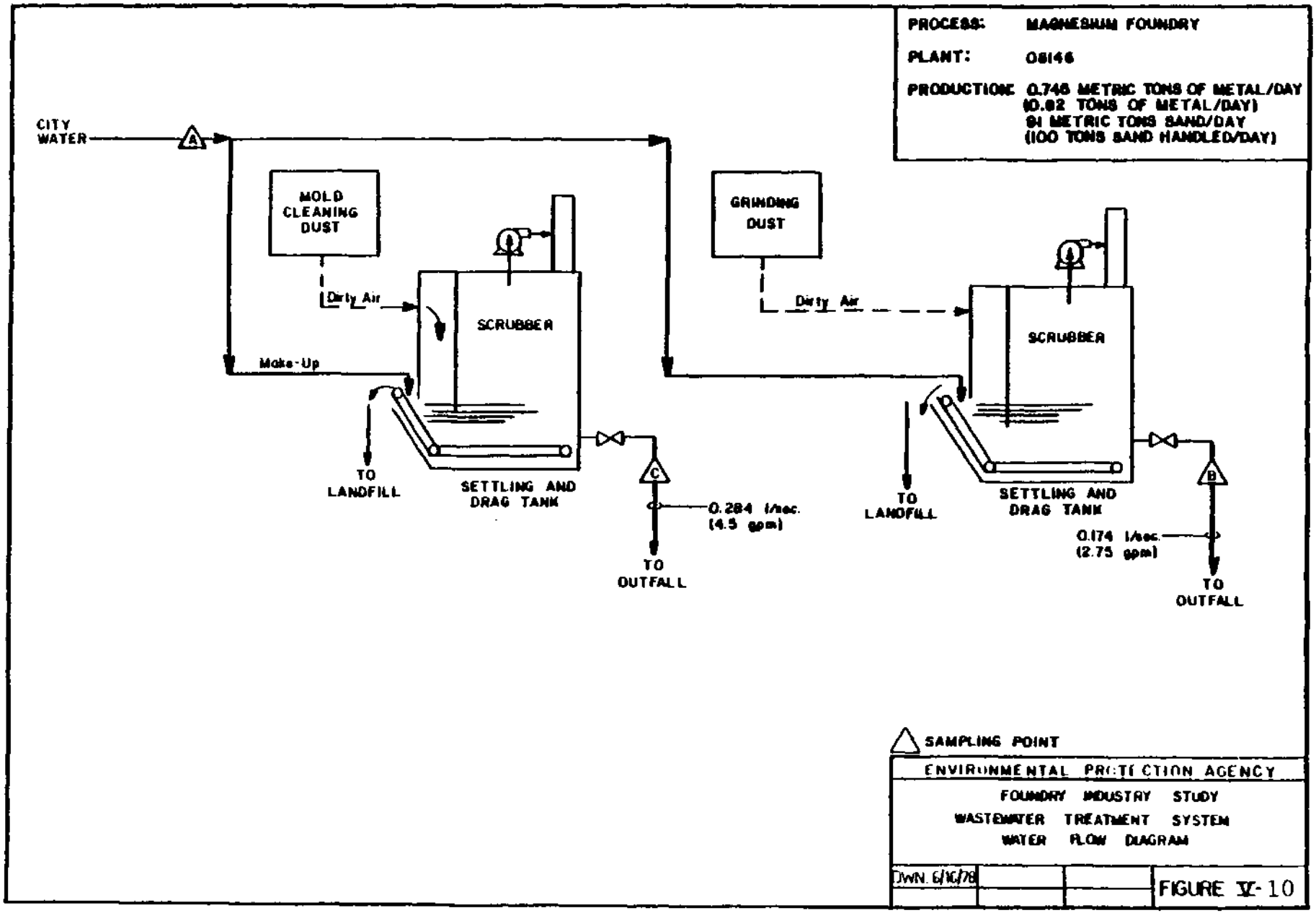
PROCESS: MAGNESIUM FOUNDRY
PLANT: 08146
PRODUCTION: 0.746 METRIC TONS OF METAL/DAY
(0.82 TONS OF METAL/DAY)
91 METRIC TONS SAND/DAY
(100 TONS SAND HANDLED/DAY)
CITY WATER
A
MOLD CLEANING DUST
Dirty Air
SCRUBBER
Make-Up
TO LANDFILL
SETTLING AND DRAG TANK
C
0.284 l/sec. (4.5 gpm)
TO OUTFALL
GRINDING DUST
Dirty Air
SCRUBBER
TO LANDFILL
SETTLING AND DRAG TANK
B
0.174 l/sec. (2.75 gpm)
TO OUTFALL
SAMPLING POINT
ENVIRONMENTAL PROTECTION AGENCY
FOUNDRY INDUSTRY STUDY
WASTEWATER TREATMENT SYSTEM
WATER FLOW DIAGRAM
DWN. 6/16/78
FIGURE V-10

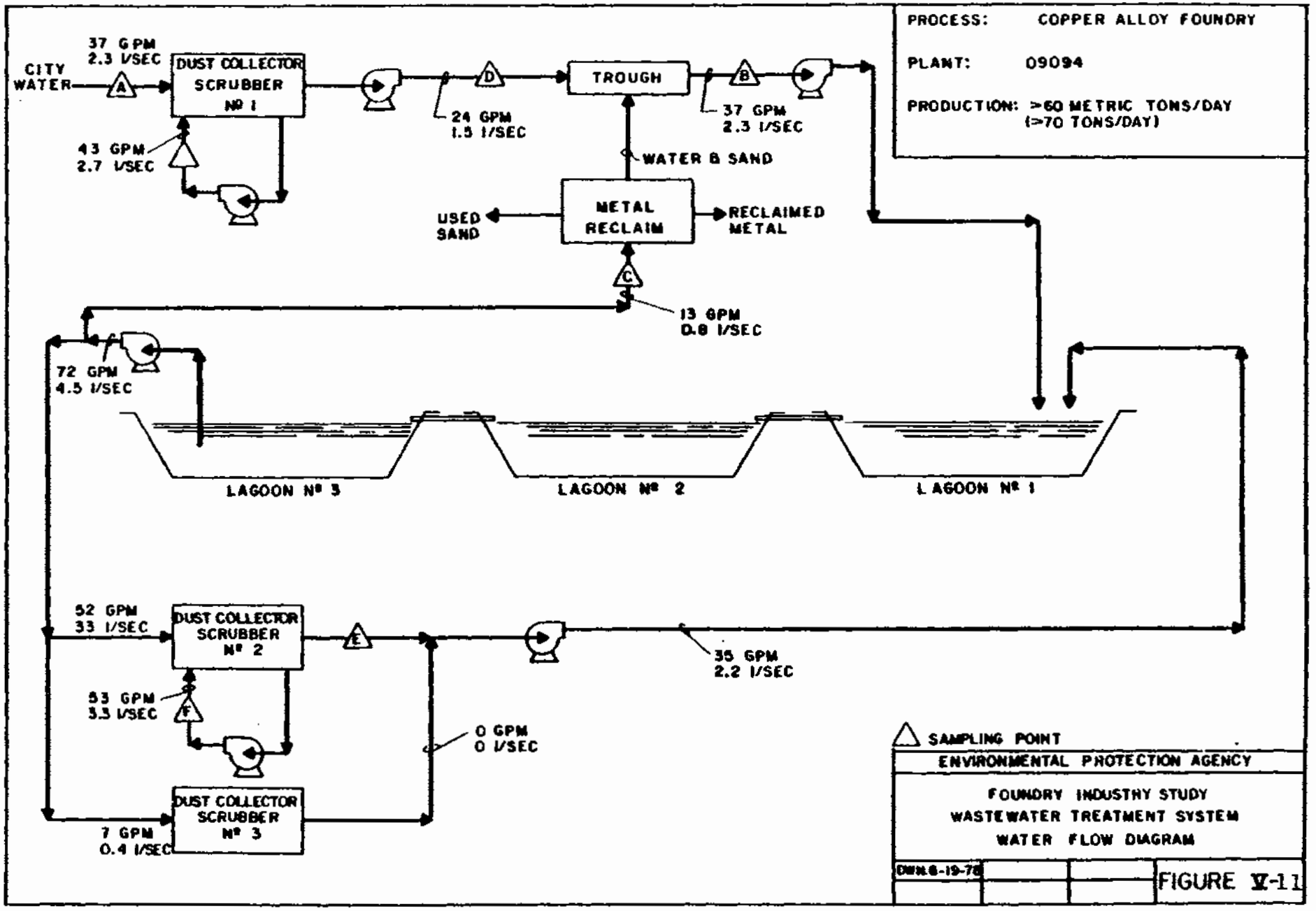
PROCESS: COPPER ALLOY FOUNDRY
PLANT: 09094
PRODUCTION: >60 METRIC TONS/DAY (>70 TONS/DAY)
CITY WATER
37 GPM 2.3 l/SEC
A
DUST COLLECTOR SCRUBBER Nº 1
43 GPM 2.7 l/SEC
D
24 GPM 1.5 l/SEC
TROUGH
B
37 GPM 2.3 l/SEC
WATER & SAND
METAL RECLAIM
USED SAND
RECLAIMED METAL
C
13 GPM 0.8 l/SEC
72 GPM 4.5 l/SEC
LAGOON Nº 3
LAGOON Nº 2
LAGOON Nº 1
52 GPM 33 l/SEC
DUST COLLECTOR SCRUBBER Nº 2
E
35 GPM 2.2 l/SEC
53 GPM 3.3 l/SEC
F
0 GPM 0 l/SEC
DUST COLLECTOR SCRUBBER Nº 3
7 GPM 0.4 l/SEC
SAMPLING POINT
ENVIRONMENTAL PROTECTION AGENCY
FOUNDRY INDUSTRY STUDY
WASTEWATER TREATMENT SYSTEM
WATER FLOW DIAGRAM
DWN 6-19-78
FIGURE V-11

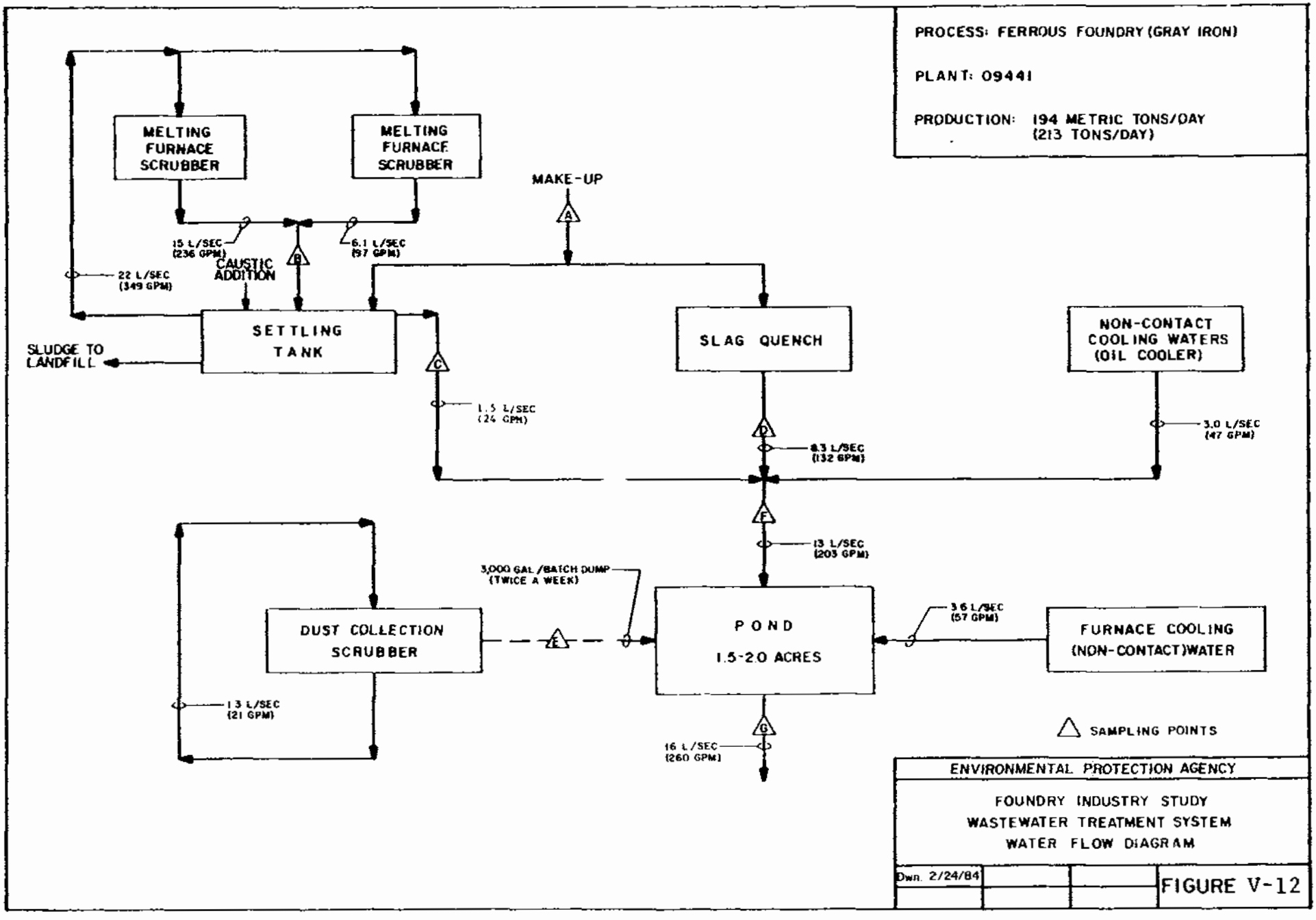
PROCESS: FERROUS FOUNDRY (GRAY IRON)
PLANT: 09441
PRODUCTION: 194 METRIC TONS/DAY (213 TONS/DAY)
MELTING FURNACE SCRUBBER
MELTING FURNACE SCRUBBER
MAKE-UP
A
15 L/SEC (236 GPM)
6.1 L/SEC (97 GPM)
B
22 L/SEC (349 GPM)
CAUSTIC ADDITION
SETTLING TANK
SLUDGE TO LANDFILL
C
1.5 L/SEC (24 GPM)
SLAG QUENCH
NON-CONTACT COOLING WATERS (OIL COOLER)
3.0 L/SEC (47 GPM)
D
8.3 L/SEC (132 GPM)
E
13 L/SEC (203 GPM)
3,000 GAL./BATCH DUMP (TWICE A WEEK)
DUST COLLECTION SCRUBBER
E
POND
1.5-2.0 ACRES
3.6 L/SEC (57 GPM)
FURNACE COOLING (NON-CONTACT) WATER
1.3 L/SEC (21 GPM)
G
16 L/SEC (260 GPM)
SAMPLING POINTS
ENVIRONMENTAL PROTECTION AGENCY
FOUNDRY INDUSTRY STUDY
WASTEWATER TREATMENT SYSTEM
WATER FLOW DIAGRAM
Dwn. 2/24/84
FIGURE V-12

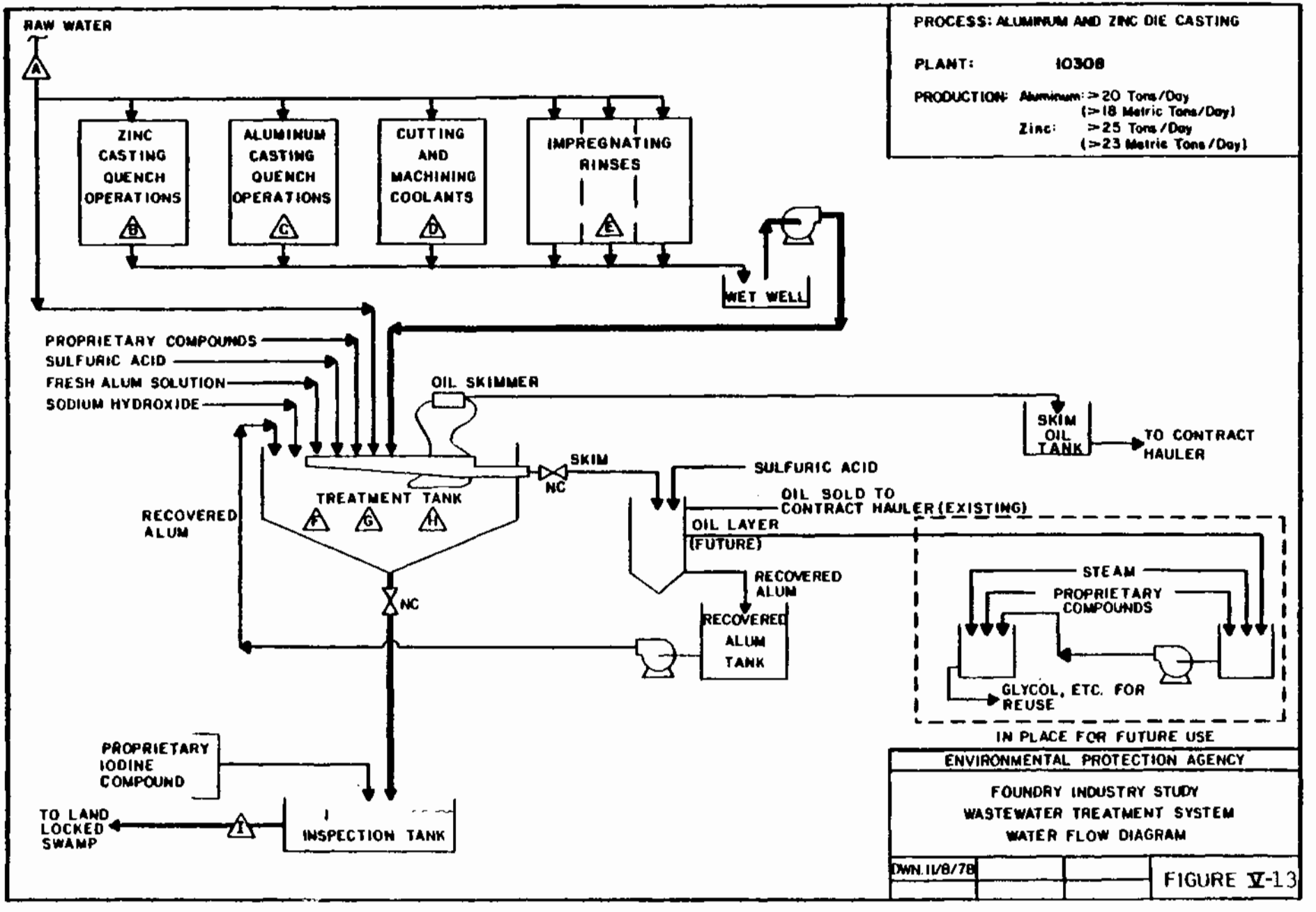
PROCESS: ALUMINUM AND ZINC DIE CASTING
PLANT: 10308
PRODUCTION: Aluminum: >20 Tons/Day (>18 Metric Tons/Day)
Zinc: >25 Tons/Day (>23 Metric Tons/Day)
RAW WATER
A
ZINC CASTING QUENCH OPERATIONS
B
ALUMINUM CASTING QUENCH OPERATIONS
C
CUTTING AND MACHINING COOLANTS
D
IMPREGNATING RINSES
E
WET WELL
PROPRIETARY COMPOUNDS
SULFURIC ACID
FRESH ALUM SOLUTION
SODIUM HYDROXIDE
OIL SKIMMER
SKIM OIL TANK
TO CONTRACT HAULER
SKIM
NC
SULFURIC ACID
TREATMENT TANK
F
G
H
OIL SOLD TO CONTRACT HAULER (EXISTING)
OIL LAYER (FUTURE)
RECOVERED ALUM
NC
RECOVERED ALUM
RECOVERED ALUM TANK
STEAM
PROPRIETARY COMPOUNDS
GLYCOL, ETC. FOR REUSE
IN PLACE FOR FUTURE USE
PROPRIETARY IODINE COMPOUND
TO LAND LOCKED SWAMP
I
INSPECTION TANK
ENVIRONMENTAL PROTECTION AGENCY
FOUNDRY INDUSTRY STUDY
WASTEWATER TREATMENT SYSTEM
WATER FLOW DIAGRAM
DWN. 11/8/78
FIGURE V-13

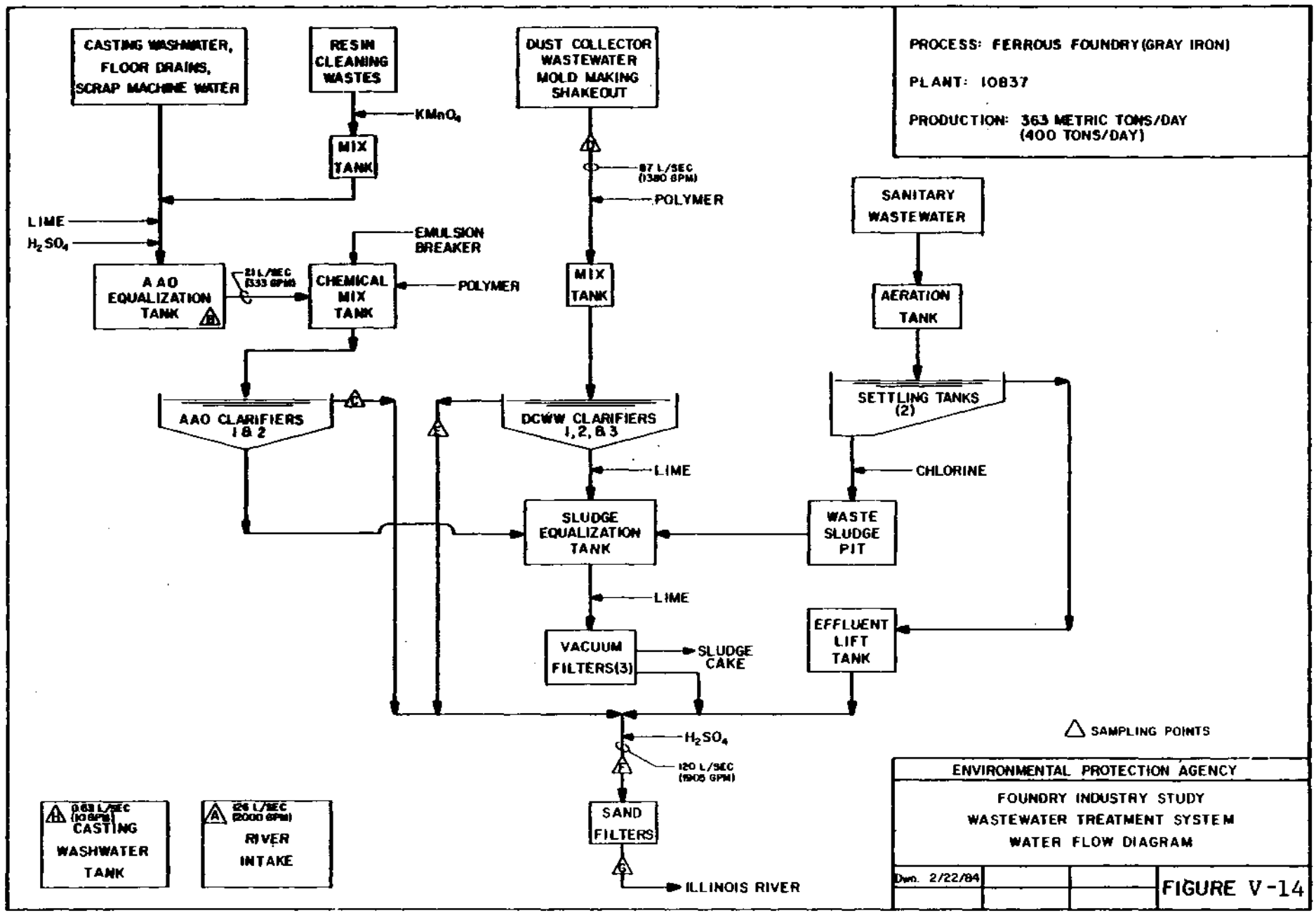
CASTING WASHWATER, FLOOR DRAINS, SCRAP MACHINE WATER
RESIN CLEANING WASTES
$KMnO_4$
MIX TANK
LIME
H_2SO_4
A AO EQUALIZATION TANK
EMULSION BREAKER
CHEMICAL MIX TANK
POLYMER
AAO CLARIFIERS 1 & 2
DUST COLLECTOR WASTEWATER MOLD MAKING SHAKEOUT
87 L/SEC (1380 GPM)
POLYMER
MIX TANK
DCWW CLARIFIERS 1, 2, & 3
LIME
SLUDGE EQUALIZATION TANK
LIME
VACUUM FILTERS(3)
SLUDGE CAKE
H_2SO_4
120 L/SEC (1905 GPM)
SAND FILTERS
ILLINOIS RIVER
SANITARY WASTEWATER
AERATION TANK
SETTLING TANKS (2)
CHLORINE
WASTE SLUDGE PIT
EFFLUENT LIFT TANK
CASTING WASHWATER TANK
RIVER INTAKE
SAMPLING POINTS
PROCESS: FERROUS FOUNDRY (GRAY IRON)
PLANT: 10837
PRODUCTION: 363 METRIC TONS/DAY (400 TONS/DAY)
ENVIRONMENTAL PROTECTION AGENCY
FOUNDRY INDUSTRY STUDY
WASTEWATER TREATMENT SYSTEM
WATER FLOW DIAGRAM
Dwn. 2/22/84
FIGURE V-14

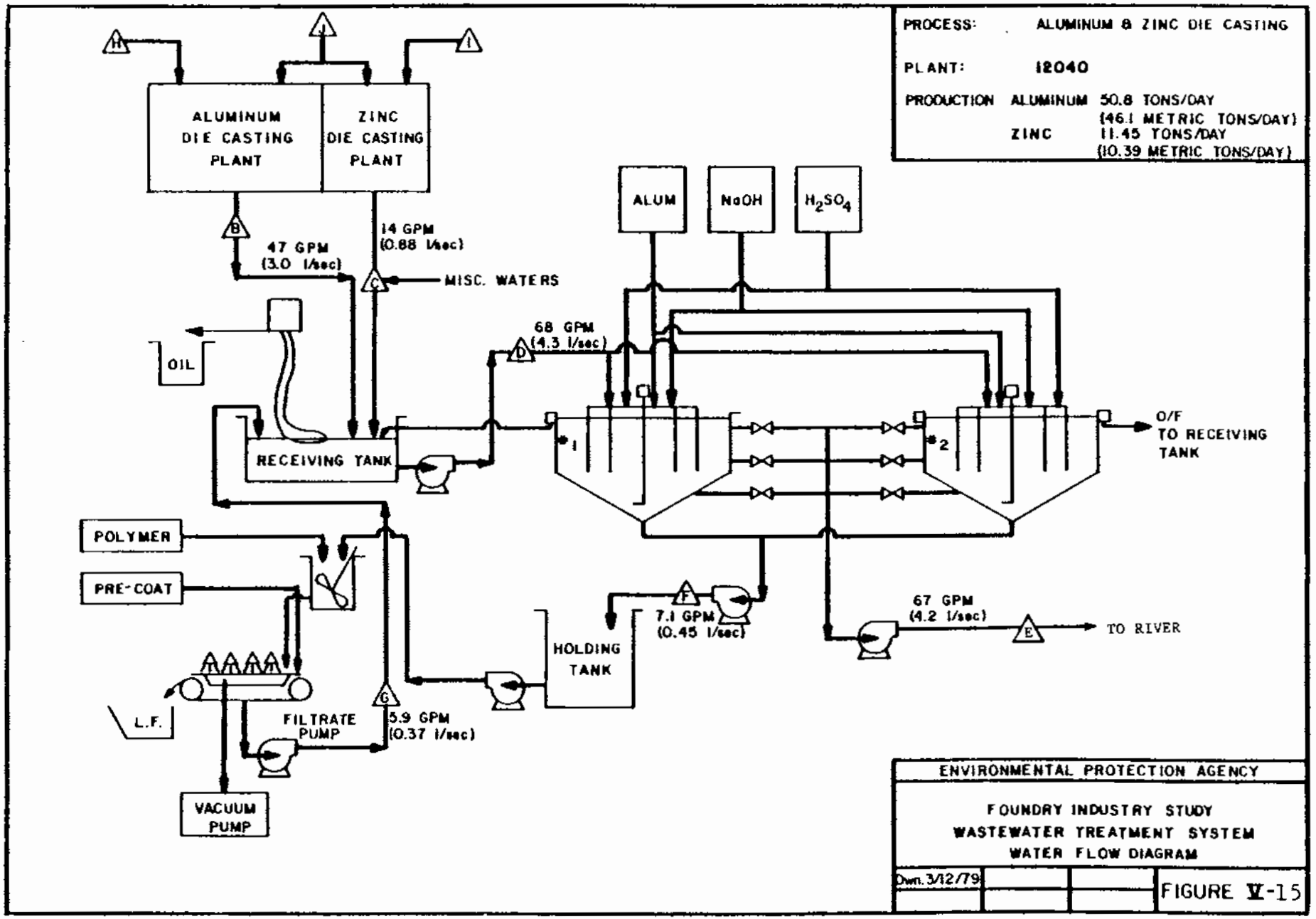
PROCESS: ALUMINUM & ZINC DIE CASTING
PLANT: 12040
PRODUCTION ALUMINUM 50.8 TONS/DAY (46.1 METRIC TONS/DAY)
ZINC 11.45 TONS/DAY (10.39 METRIC TONS/DAY)
ALUMINUM DIE CASTING PLANT
ZINC DIE CASTING PLANT
47 GPM (3.0 l/sec)
14 GPM (0.88 l/sec)
MISC. WATERS
ALUM
NaOH
H_2SO_4
OIL
68 GPM (4.3 l/sec)
RECEIVING TANK
O/F TO RECEIVING TANK
POLYMER
PRE-COAT
HOLDING TANK
7.1 GPM (0.45 l/sec)
67 GPM (4.2 l/sec)
TO RIVER
L.F.
FILTRATE PUMP
5.9 GPM (0.37 l/sec)
VACUUM PUMP
ENVIRONMENTAL PROTECTION AGENCY
FOUNDRY INDUSTRY STUDY
WASTEWATER TREATMENT SYSTEM
WATER FLOW DIAGRAM
Dwn. 3/12/79
FIGURE V-15

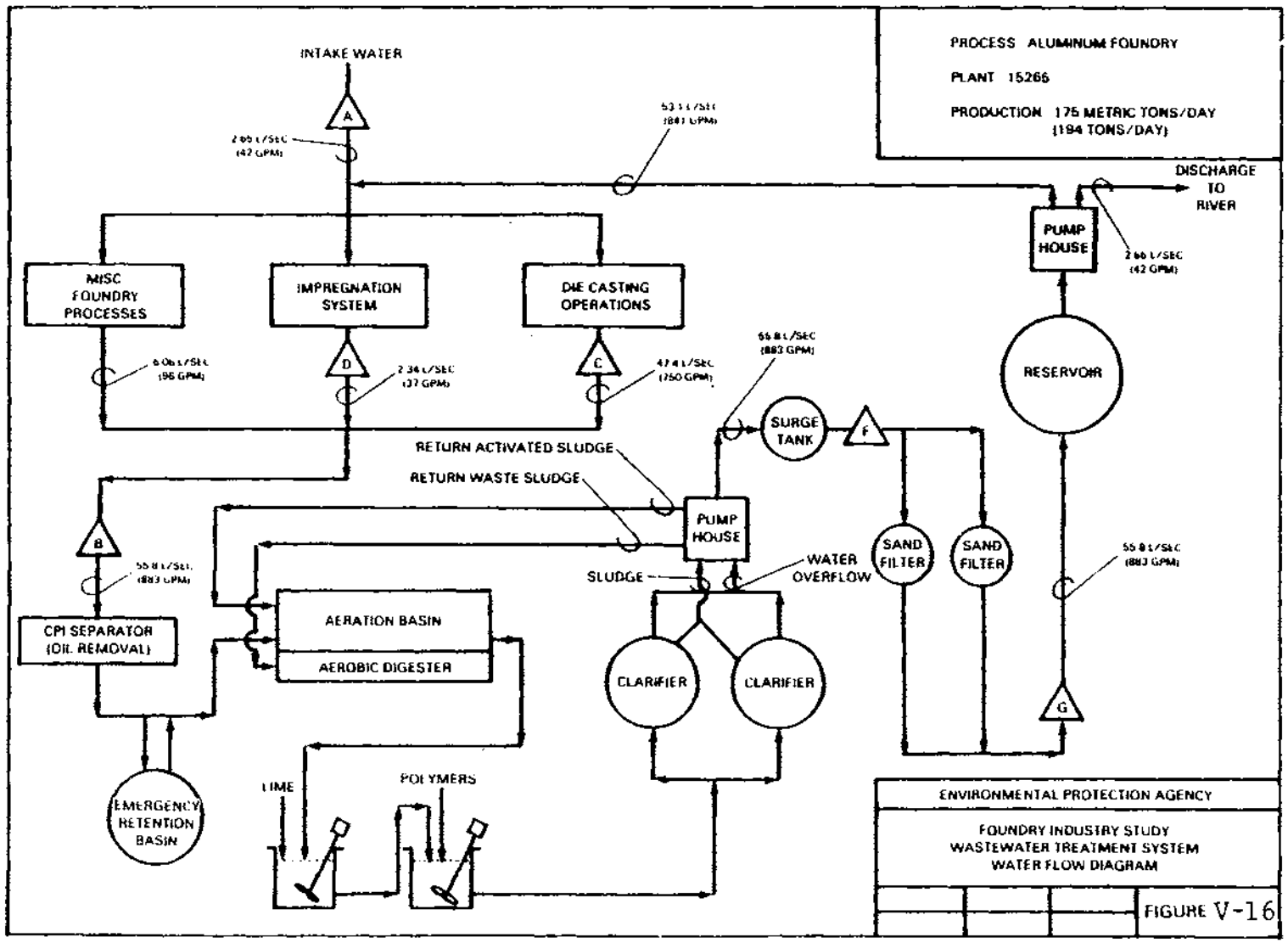
PROCESS ALUMINUM FOUNDRY
PLANT 15266
PRODUCTION 175 METRIC TONS/DAY (194 TONS/DAY)
INTAKE WATER
A
2.66 L/SEC (42 GPM)
53.1 L/SEC (841 GPM)
DISCHARGE TO RIVER
PUMP HOUSE
2.66 L/SEC (42 GPM)
MISC FOUNDRY PROCESSES
IMPREGNATION SYSTEM
DIE CASTING OPERATIONS
6.06 L/SEC (96 GPM)
D
2.34 L/SEC (37 GPM)
C
47.4 L/SEC (750 GPM)
55.8 L/SEC (883 GPM)
RESERVOIR
SURGE TANK
F
RETURN ACTIVATED SLUDGE
RETURN WASTE SLUDGE
PUMP HOUSE
B
55.8 L/SEC (883 GPM)
SAND FILTER
SAND FILTER
55.8 L/SEC (883 GPM)
SLUDGE
WATER OVERFLOW
CPI SEPARATOR (OIL REMOVAL)
AERATION BASIN
AEROBIC DIGESTER
CLARIFIER
CLARIFIER
G
EMERGENCY RETENTION BASIN
LIME
POLYMERS
ENVIRONMENTAL PROTECTION AGENCY
FOUNDRY INDUSTRY STUDY
WASTEWATER TREATMENT SYSTEM
WATER FLOW DIAGRAM
FIGURE V-16

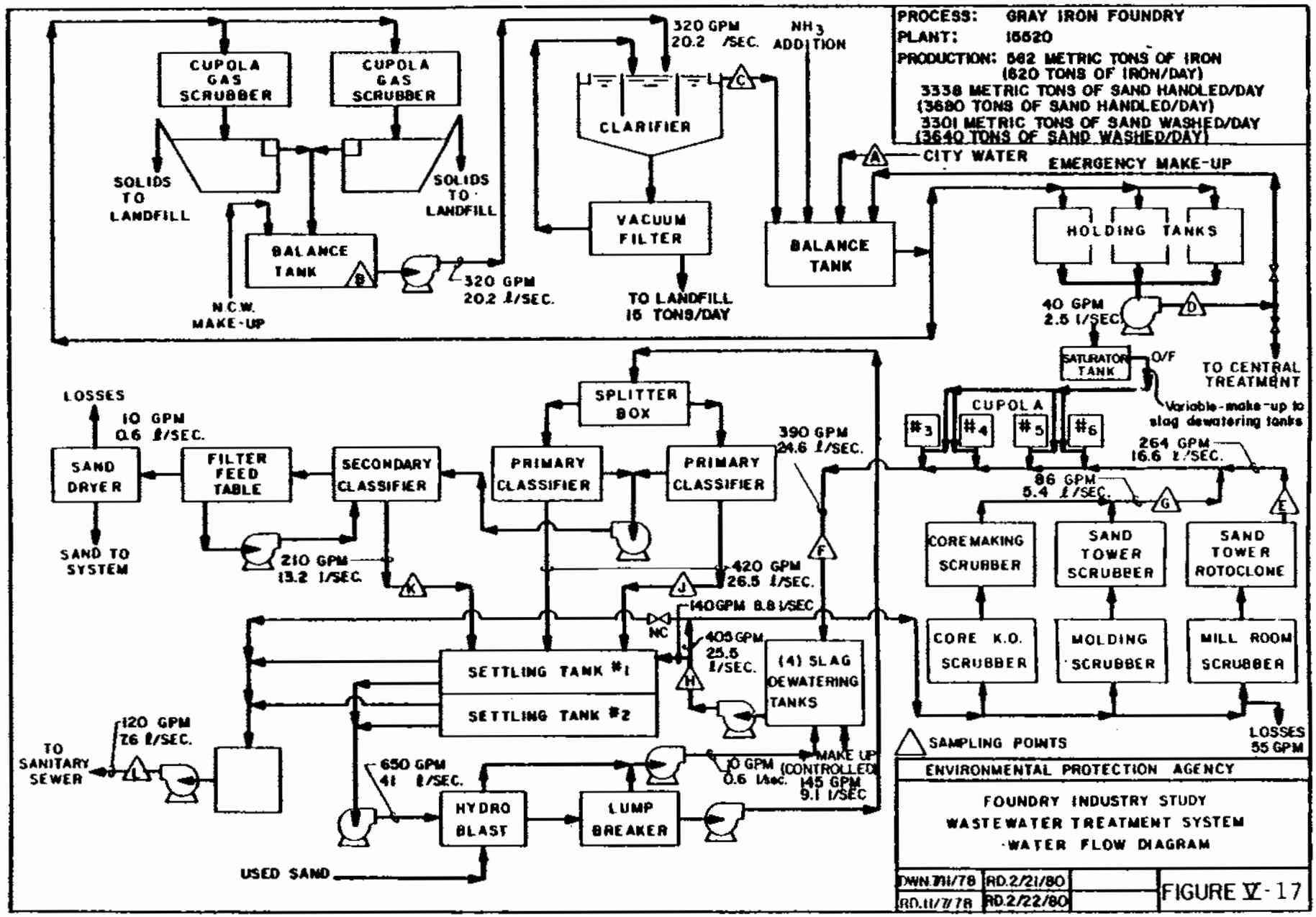
PROCESS: GRAY IRON FOUNDRY
PLANT: 16620
PRODUCTION: 562 METRIC TONS OF IRON (620 TONS OF IRON/DAY)
3338 METRIC TONS OF SAND HANDLED/DAY (3680 TONS OF SAND HANDLED/DAY)
3301 METRIC TONS OF SAND WASHED/DAY (3640 TONS OF SAND WASHED/DAY)
CUPOLA GAS SCRUBBER
CUPOLA GAS SCRUBBER
SOLIDS TO LANDFILL
SOLIDS TO LANDFILL
BALANCE TANK
N.C.W. MAKE-UP
320 GPM 20.2 ℓ/SEC.
CLARIFIER
320 GPM 20.2 /SEC.
NH3 ADDITION
VACUUM FILTER
TO LANDFILL 15 TONS/DAY
BALANCE TANK
CITY WATER
EMERGENCY MAKE-UP
HOLDING TANKS
40 GPM 2.5 ℓ/SEC.
SATURATOR TANK
O/F
TO CENTRAL TREATMENT
Variable-make-up to slag dewatering tanks
CUPOLA
#3
#4
#5
#6
264 GPM 16.6 ℓ/SEC.
86 GPM 5.4 ℓ/SEC.
SPLITTER BOX
390 GPM 24.6 ℓ/SEC.
LOSSES
10 GPM 0.6 ℓ/SEC.
SAND DRYER
FILTER FEED TABLE
SECONDARY CLASSIFIER
PRIMARY CLASSIFIER
PRIMARY CLASSIFIER
SAND TO SYSTEM
210 GPM 13.2 ℓ/SEC.
420 GPM 26.5 ℓ/SEC.
140 GPM 8.8 ℓ/SEC.
NC
405 GPM 25.5 ℓ/SEC.
SETTLING TANK #1
SETTLING TANK #2
(4) SLAG DEWATERING TANKS
CORE MAKING SCRUBBER
SAND TOWER SCRUBBER
SAND TOWER ROTOCLONE
CORE K.O. SCRUBBER
MOLDING SCRUBBER
MILL ROOM SCRUBBER
120 GPM 7.6 ℓ/SEC.
TO SANITARY SEWER
650 GPM 41 ℓ/SEC.
HYDRO BLAST
LUMP BREAKER
10 GPM (CONTROLLED) 0.6 ℓ/sec. 145 GPM 9.1 ℓ/SEC
MAKE UP
USED SAND
SAMPLING POINTS
LOSSES 55 GPM
ENVIRONMENTAL PROTECTION AGENCY
FOUNDRY INDUSTRY STUDY
WASTEWATER TREATMENT SYSTEM
WATER FLOW DIAGRAM
DWN.7/11/78
RD.2/21/80
RD.11/7/78
RD.2/22/80
FIGURE V-17

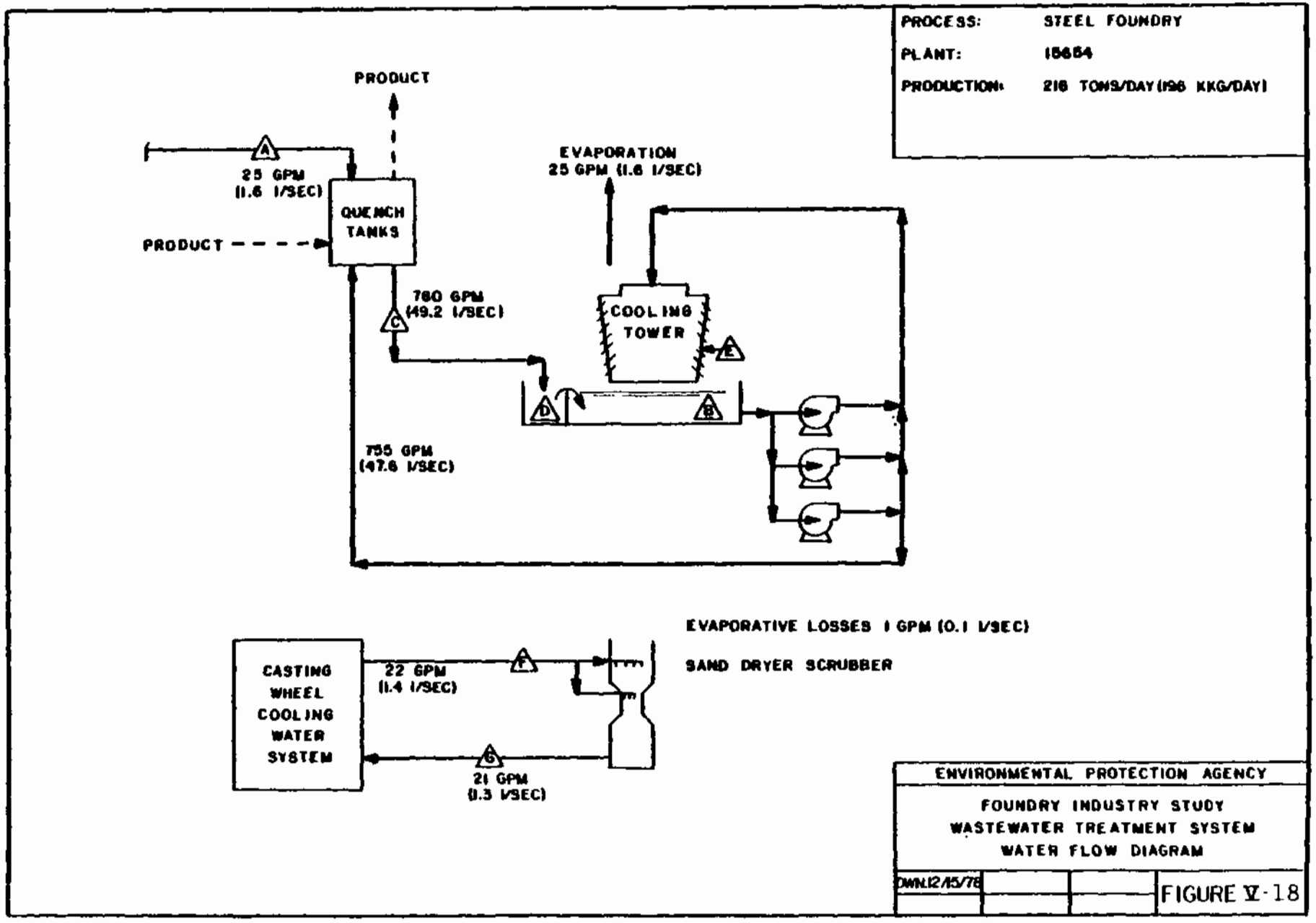
PROCESS: STEEL FOUNDRY
PLANT: 15684
PRODUCTION: 216 TONS/DAY (196 KKG/DAY)
PRODUCT
25 GPM (1.6 L/SEC)
QUENCH TANKS
PRODUCT
EVAPORATION 25 GPM (1.6 L/SEC)
780 GPM (49.2 L/SEC)
COOLING TOWER
755 GPM (47.6 L/SEC)
CASTING WHEEL COOLING WATER SYSTEM
22 GPM (1.4 L/SEC)
21 GPM (1.3 L/SEC)
EVAPORATIVE LOSSES 1 GPM (0.1 L/SEC)
SAND DRYER SCRUBBER
ENVIRONMENTAL PROTECTION AGENCY
FOUNDRY INDUSTRY STUDY
WASTEWATER TREATMENT SYSTEM
WATER FLOW DIAGRAM
DWN 12/15/78
FIGURE V-18

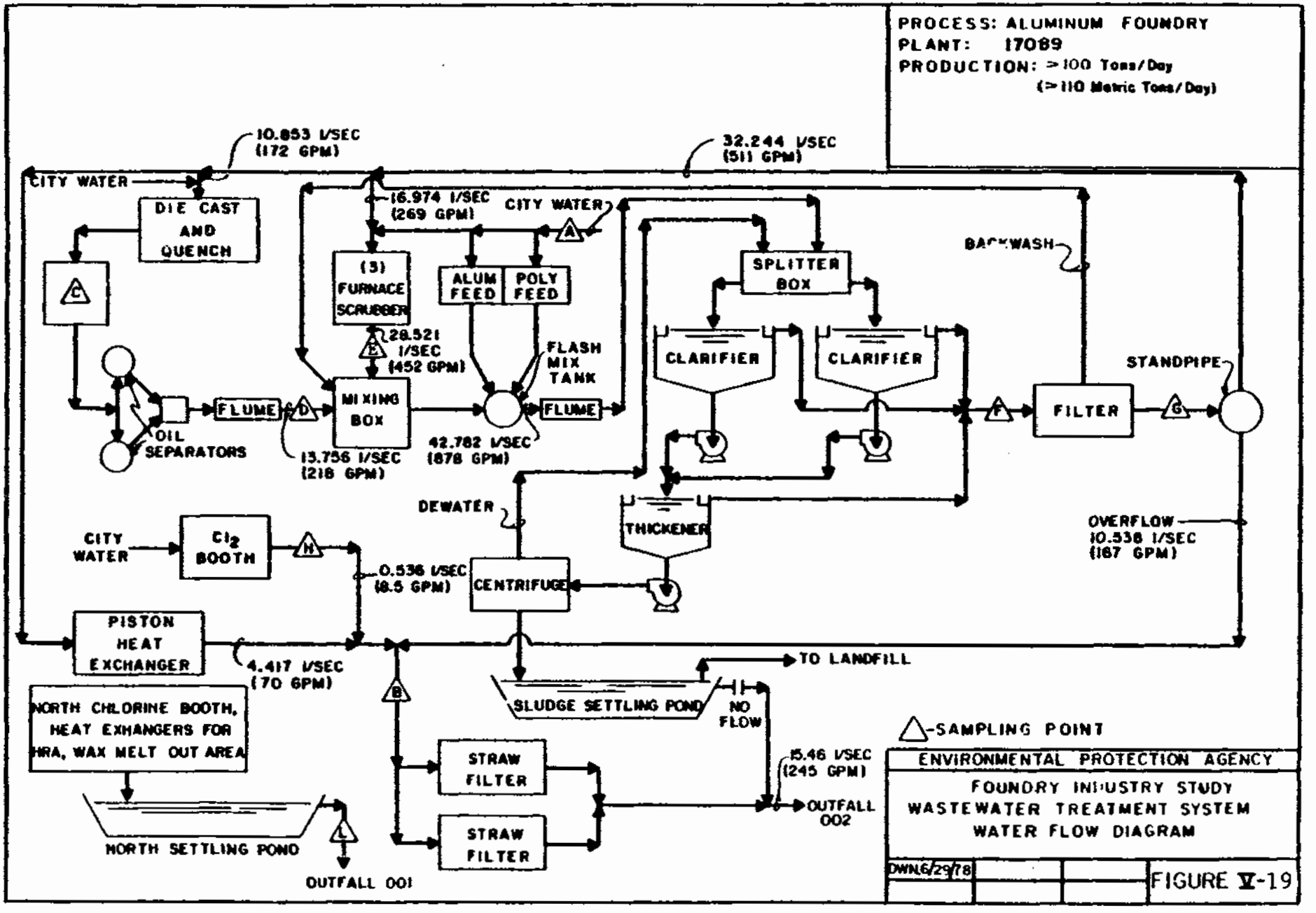
PROCESS: ALUMINUM FOUNDRY
PLANT: 17089
PRODUCTION: >100 Tons/Day
(>110 Metric Tons/Day)
10.853 l/SEC
(172 GPM)
32.244 l/SEC
(511 GPM)
CITY WATER
DIE CAST AND QUENCH
16.974 l/SEC
(269 GPM)
CITY WATER
(3) FURNACE SCRUBBER
ALUM FEED
POLY FEED
BACKWASH
SPLITTER BOX
28.521 l/SEC
(452 GPM)
FLASH MIX TANK
CLARIFIER
CLARIFIER
STANDPIPE
FLUME
MIXING BOX
FLUME
OIL SEPARATORS
13.756 l/SEC
(218 GPM)
42.782 l/SEC
(678 GPM)
FILTER
DEWATER
THICKENER
CITY WATER
Cl2 BOOTH
OVERFLOW
10.538 l/SEC
(167 GPM)
0.536 l/SEC
(8.5 GPM)
CENTRIFUGE
PISTON HEAT EXCHANGER
4.417 l/SEC
(70 GPM)
TO LANDFILL
SLUDGE SETTLING POND
NO FLOW
NORTH CHLORINE BOOTH, HEAT EXHANGERS FOR HRA, WAX MELT OUT AREA
STRAW FILTER
STRAW FILTER
15.46 l/SEC
(245 GPM)
OUTFALL 002
NORTH SETTLING POND
OUTFALL 001
△-SAMPLING POINT
ENVIRONMENTAL PROTECTION AGENCY
FOUNDRY INDUSTRY STUDY
WASTEWATER TREATMENT SYSTEM
WATER FLOW DIAGRAM
DWN 6/29/78
FIGURE V-19

PROCESS: FERROUS FOUNDRY(GRAY IRON)

PLANT: 17230

PRODUCTION: 41.4 METRIC TONS/SHIFT
(45.5 TONS/SHIFT)

DUST COLLECTION SYSTEM

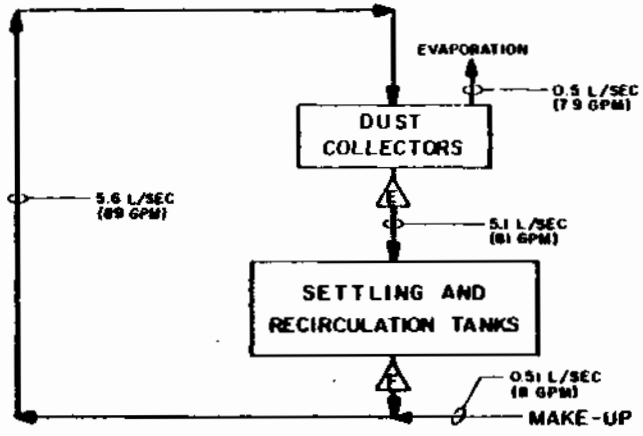

CUPOLA EMISSIONS CONTROL

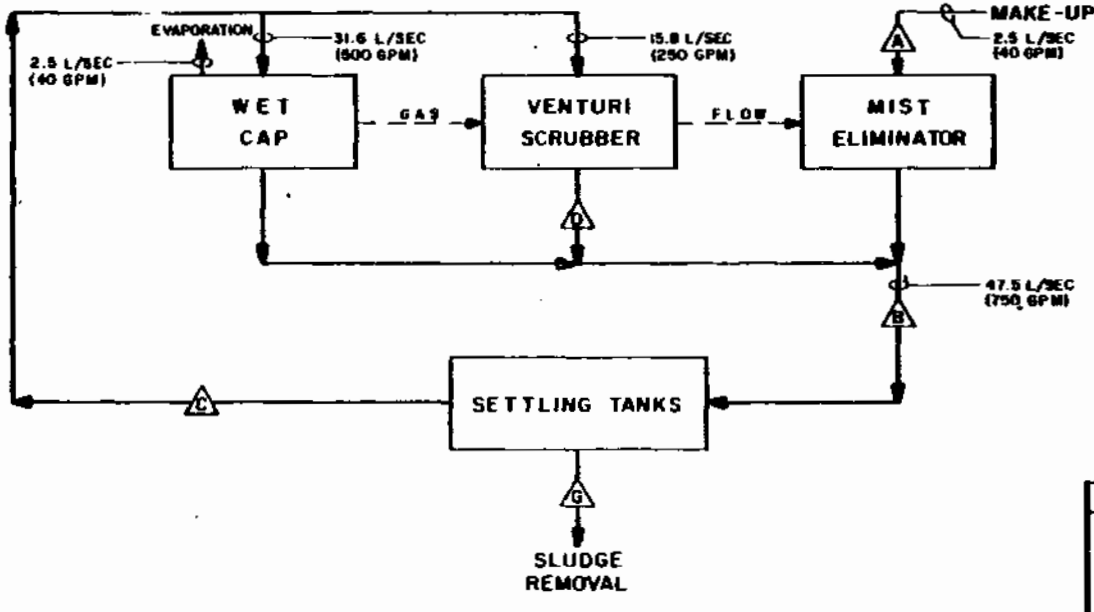

△ SAMPLING POINTS

ENVIRONMENTAL PROTECTION AGENCY

FOUNDRY INDUSTRY STUDY
WASTEWATER TREATMENT SYSTEM
WATER FLOW DIAGRAM

Dwn. 2/23/84

FIGURE V-20

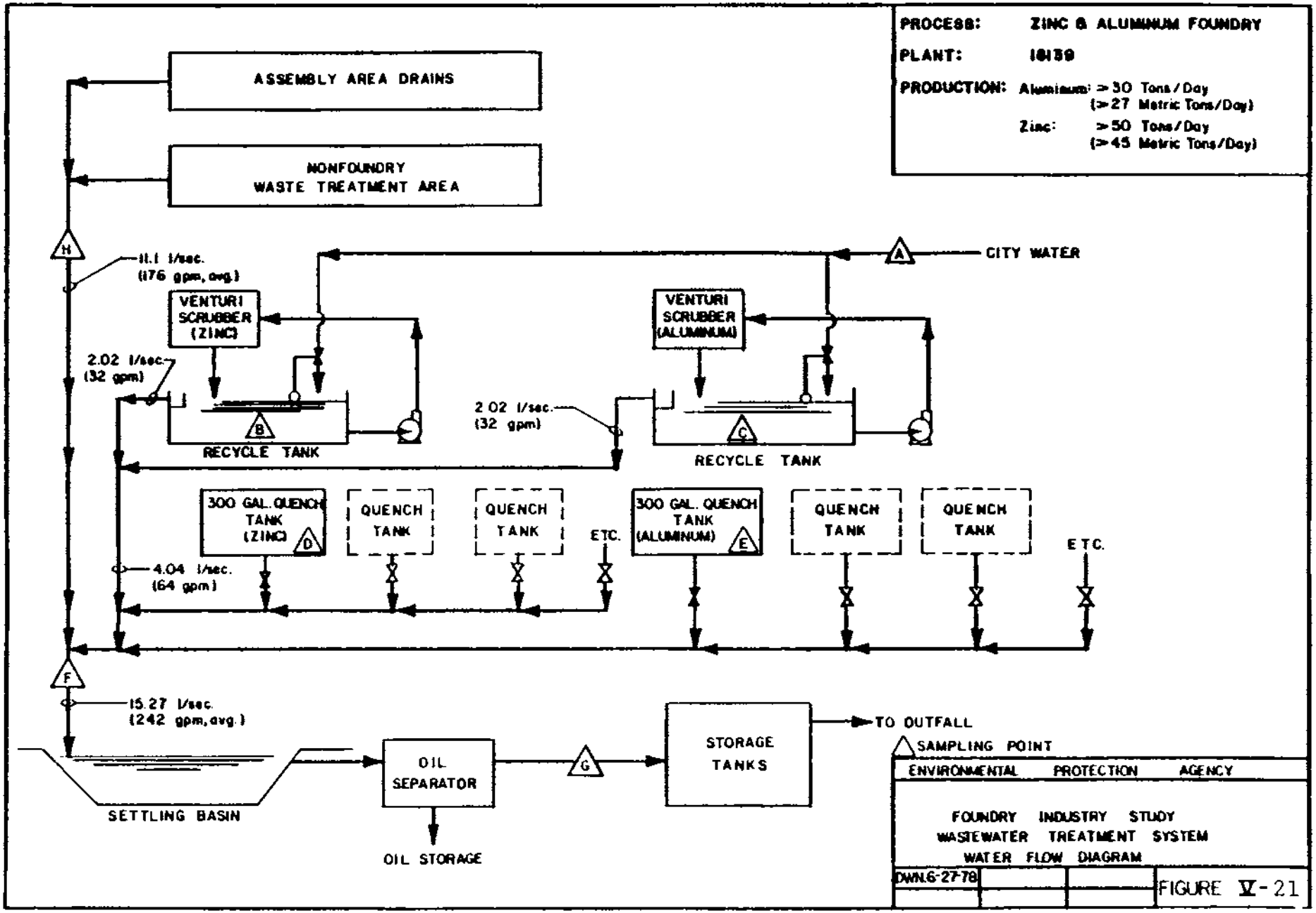
PROCESS: ZINC & ALUMINUM FOUNDRY
PLANT: 18159
PRODUCTION: Aluminum: ≥30 Tons/Day (≥27 Metric Tons/Day)
Zinc: ≥50 Tons/Day (≥45 Metric Tons/Day)
ASSEMBLY AREA DRAINS
NONFOUNDRY WASTE TREATMENT AREA
H
11.1 l/sec. (176 gpm, avg.)
A
CITY WATER
VENTURI SCRUBBER (ZINC)
VENTURI SCRUBBER (ALUMINUM)
2.02 l/sec. (32 gpm)
2.02 l/sec. (32 gpm)
B
RECYCLE TANK
C
RECYCLE TANK
300 GAL. QUENCH TANK (ZINC)
D
QUENCH TANK
QUENCH TANK
ETC.
300 GAL. QUENCH TANK (ALUMINUM)
E
QUENCH TANK
QUENCH TANK
ETC.
4.04 l/sec. (64 gpm)
F
15.27 l/sec. (242 gpm, avg.)
SETTLING BASIN
OIL SEPARATOR
G
STORAGE TANKS
TO OUTFALL
SAMPLING POINT
OIL STORAGE
ENVIRONMENTAL PROTECTION AGENCY
FOUNDRY INDUSTRY STUDY
WASTEWATER TREATMENT SYSTEM
WATER FLOW DIAGRAM
DWG-6-27-78
FIGURE V-21

PROCESS:	BRONZE FOUNDRY DUST COLLECTION
PLANT:	19872
PRODUCTION:	45 TONS OF SAND/DAY (40.8 METRIC TONS OF SAND/DAY) 24 TONS OF METAL/DAY (21.8 METRIC TONS OF METAL/DAY)

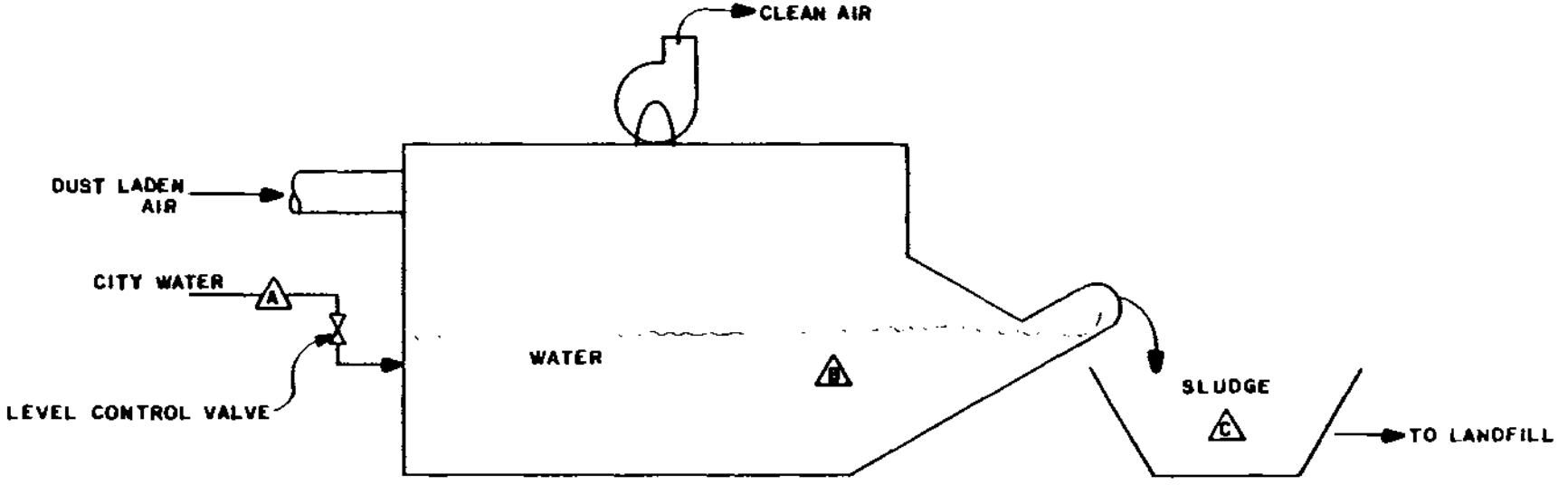

ENVIRONMENTAL PROTECTION AGENCY

FOUNDRY INDUSTRY STUDY
WASTEWATER TREATMENT SYSTEM
WATER FLOW DIAGRAM

DWL2/2/79

FIGURE V-22

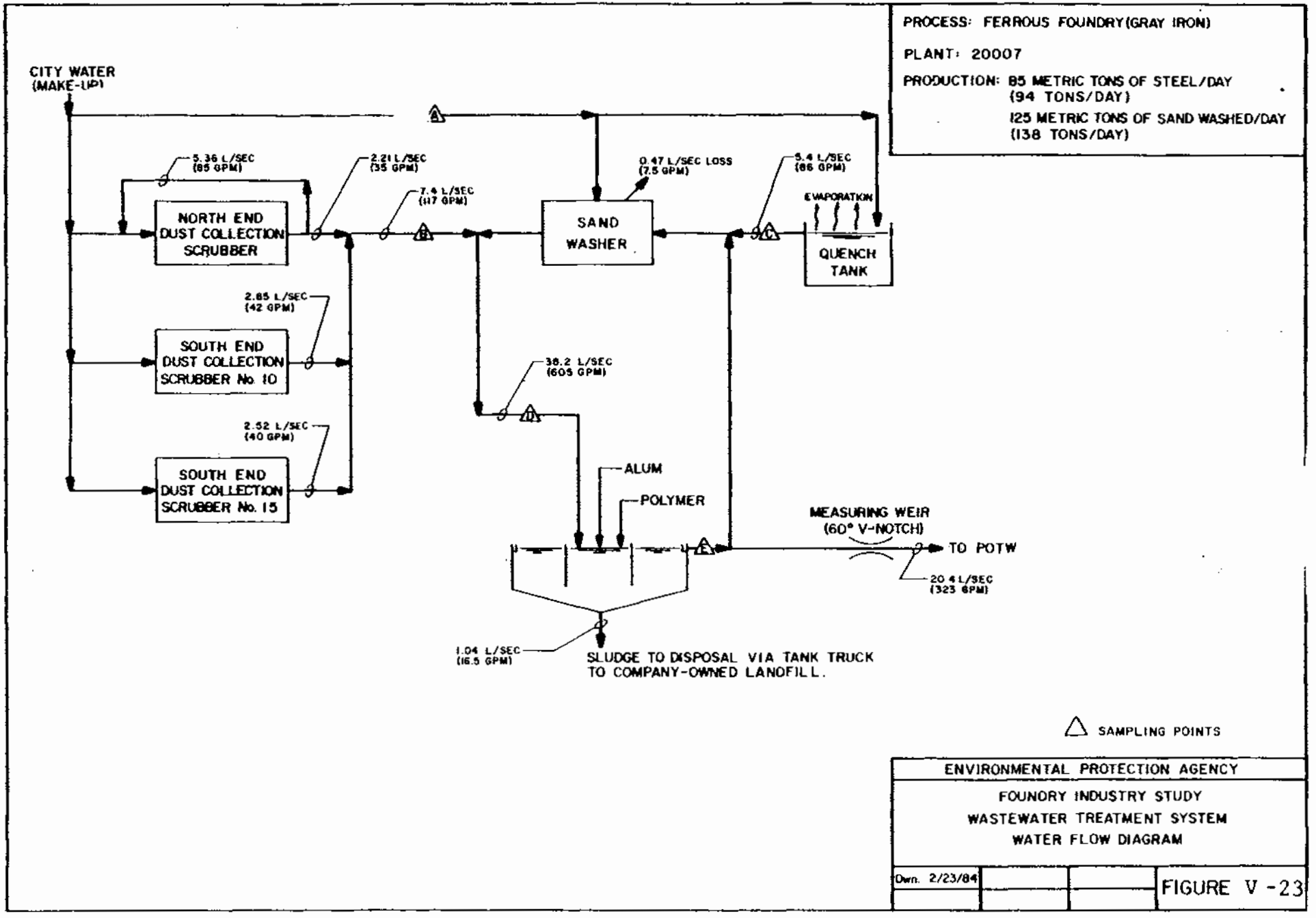
PROCESS: FERROUS FOUNDRY (GRAY IRON)
PLANT: 20007
PRODUCTION: 85 METRIC TONS OF STEEL/DAY (94 TONS/DAY)
125 METRIC TONS OF SAND WASHED/DAY (138 TONS/DAY)
CITY WATER (MAKE-UP)
5.36 L/SEC (85 GPM)
2.21 L/SEC (35 GPM)
7.4 L/SEC (117 GPM)
0.47 L/SEC LOSS (7.5 GPM)
5.4 L/SEC (86 GPM)
EVAPORATION
NORTH END DUST COLLECTION SCRUBBER
SAND WASHER
QUENCH TANK
2.65 L/SEC (42 GPM)
SOUTH END DUST COLLECTION SCRUBBER No. 10
38.2 L/SEC (605 GPM)
2.52 L/SEC (40 GPM)
SOUTH END DUST COLLECTION SCRUBBER No. 15
ALUM
POLYMER
MEASURING WEIR (60° V-NOTCH)
TO POTW
20.4 L/SEC (323 GPM)
1.04 L/SEC (16.5 GPM)
SLUDGE TO DISPOSAL VIA TANK TRUCK TO COMPANY-OWNED LANDFILL.
SAMPLING POINTS
ENVIRONMENTAL PROTECTION AGENCY
FOUNDRY INDUSTRY STUDY
WASTEWATER TREATMENT SYSTEM
WATER FLOW DIAGRAM
Dwn. 2/23/84
FIGURE V-23

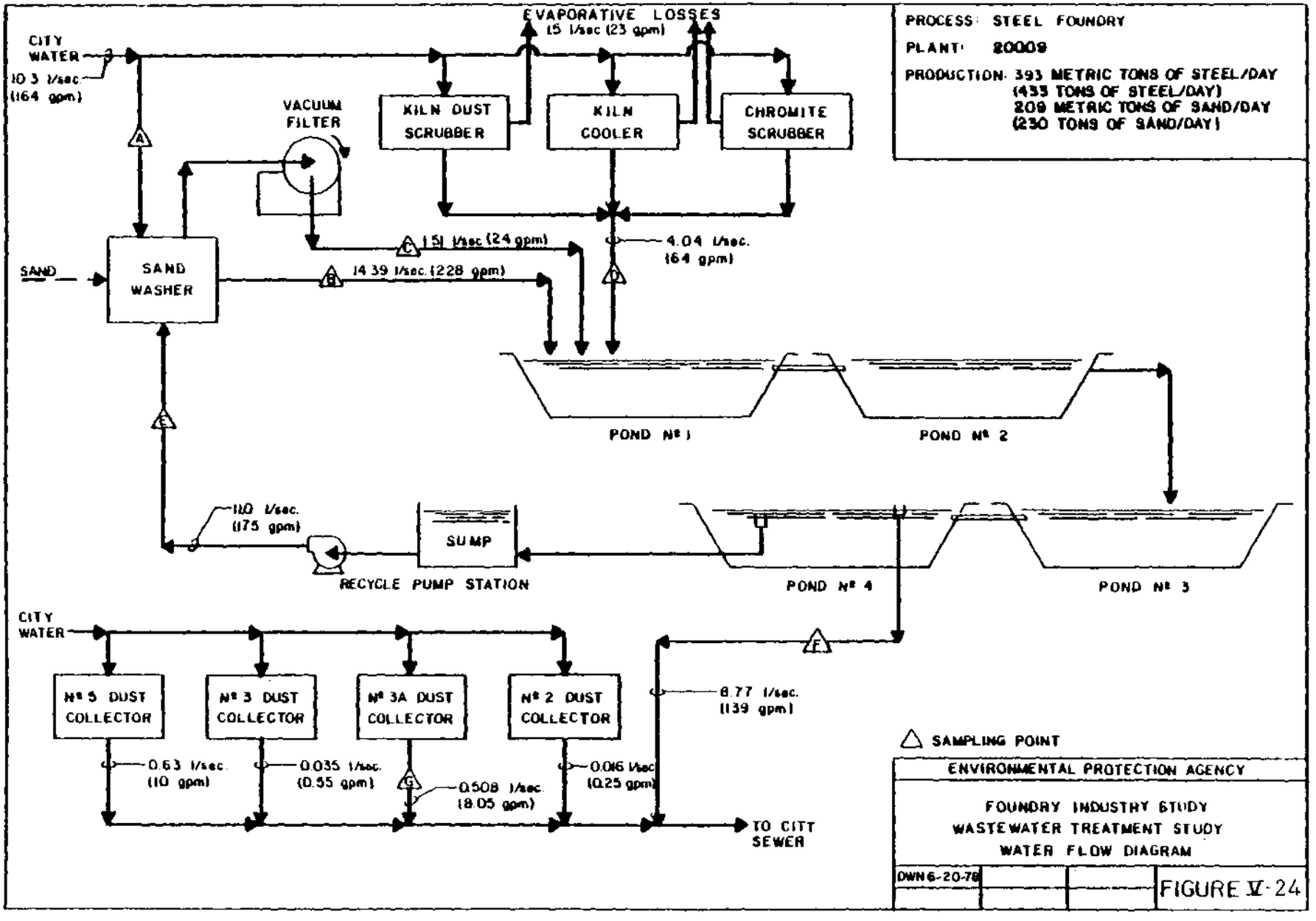
EVAPORATIVE LOSSES
15 l/sec (23 gpm)
CITY WATER
10.3 l/sec (164 gpm)
VACUUM FILTER
KILN DUST SCRUBBER
KILN COOLER
CHROMITE SCRUBBER
PROCESS: STEEL FOUNDRY
PLANT: 20009
PRODUCTION: 393 METRIC TONS OF STEEL/DAY (433 TONS OF STEEL/DAY)
209 METRIC TONS OF SAND/DAY (230 TONS OF SAND/DAY)
SAND
SAND WASHER
1.51 l/sec (24 gpm)
4.04 l/sec. (64 gpm)
14.39 l/sec (228 gpm)
POND Nº 1
POND Nº 2
11.0 l/sec. (175 gpm)
SUMP
RECYCLE PUMP STATION
POND Nº 4
POND Nº 3
CITY WATER
Nº 5 DUST COLLECTOR
Nº 3 DUST COLLECTOR
Nº 3A DUST COLLECTOR
Nº 2 DUST COLLECTOR
8.77 l/sec. (139 gpm)
0.63 l/sec. (10 gpm)
0.035 l/sec. (0.55 gpm)
0.508 l/sec. (8.05 gpm)
0.016 l/sec (0.25 gpm)
TO CITY SEWER
SAMPLING POINT
ENVIRONMENTAL PROTECTION AGENCY
FOUNDRY INDUSTRY STUDY
WASTEWATER TREATMENT STUDY
WATER FLOW DIAGRAM
DWN 6-20-78
FIGURE V-24

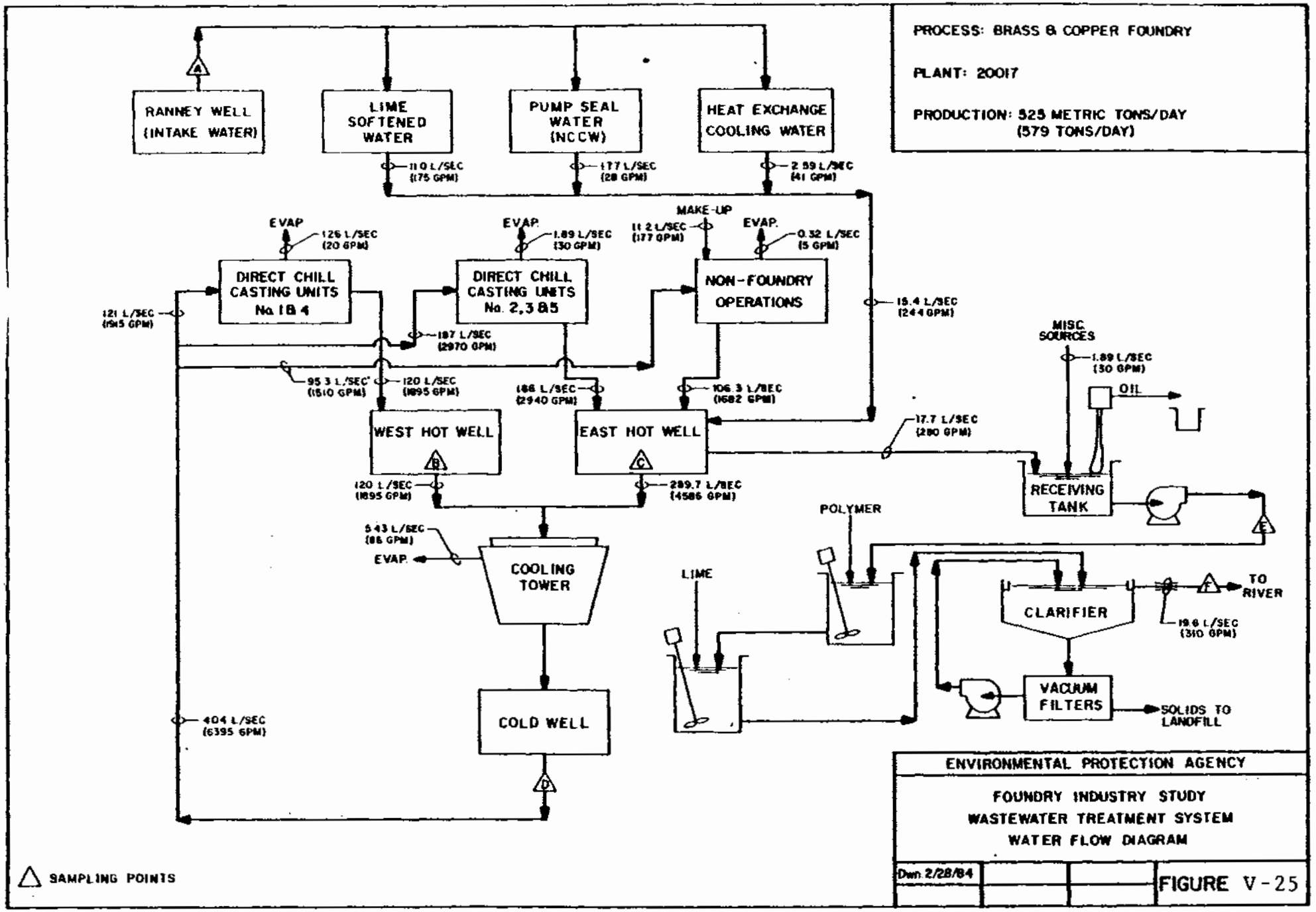
PROCESS: BRASS & COPPER FOUNDRY
PLANT: 20017
PRODUCTION: 525 METRIC TONS/DAY (579 TONS/DAY)
RANNEY WELL (INTAKE WATER)
LIME SOFTENED WATER
PUMP SEAL WATER (NCCW)
HEAT EXCHANGE COOLING WATER
11.0 L/SEC (175 GPM)
17.7 L/SEC (28 GPM)
2.59 L/SEC (41 GPM)
EVAP. 1.26 L/SEC (20 GPM)
EVAP. 1.89 L/SEC (30 GPM)
MAKE-UP 11.2 L/SEC (177 GPM)
EVAP. 0.32 L/SEC (5 GPM)
DIRECT CHILL CASTING UNITS No. 1 & 4
DIRECT CHILL CASTING UNITS No. 2, 3 & 5
NON-FOUNDRY OPERATIONS
12.1 L/SEC (195 GPM)
18.7 L/SEC (2970 GPM)
15.4 L/SEC (244 GPM)
MISC. SOURCES
1.89 L/SEC (30 GPM)
OIL
95.3 L/SEC (1510 GPM)
120 L/SEC (1895 GPM)
18.6 L/SEC (2940 GPM)
106.3 L/SEC (1682 GPM)
WEST HOT WELL
EAST HOT WELL
17.7 L/SEC (280 GPM)
120 L/SEC (1895 GPM)
289.7 L/SEC (4586 GPM)
RECEIVING TANK
POLYMER
5.43 L/SEC (86 GPM)
EVAP.
COOLING TOWER
LIME
CLARIFIER
TO RIVER
19.6 L/SEC (310 GPM)
VACUUM FILTERS
SOLIDS TO LANDFILL
40.4 L/SEC (6395 GPM)
COLD WELL
SAMPLING POINTS
ENVIRONMENTAL PROTECTION AGENCY
FOUNDRY INDUSTRY STUDY
WASTEWATER TREATMENT SYSTEM
WATER FLOW DIAGRAM
Dwn 2/28/84
FIGURE V-25

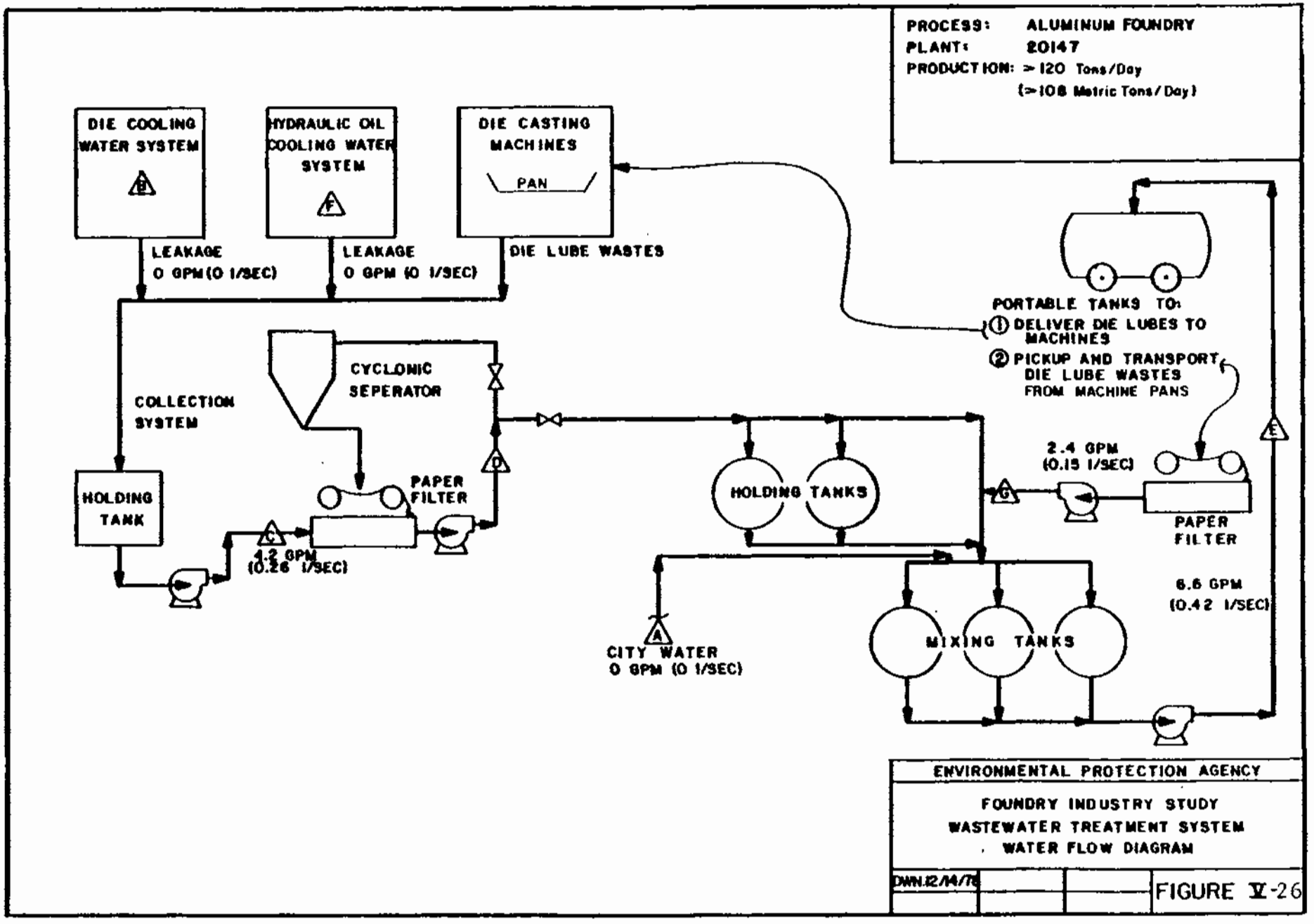
PROCESS: ALUMINUM FOUNDRY
PLANT: 20147
PRODUCTION: > 120 Tons/Day
(>108 Metric Tons/Day)
DIE COOLING WATER SYSTEM
HYDRAULIC OIL COOLING WATER SYSTEM
DIE CASTING MACHINES
PAN
LEAKAGE 0 GPM (0 l/SEC)
LEAKAGE 0 GPM (0 l/SEC)
DIE LUBE WASTES
PORTABLE TANKS TO:
① DELIVER DIE LUBES TO MACHINES
② PICKUP AND TRANSPORT DIE LUBE WASTES FROM MACHINE PANS
COLLECTION SYSTEM
CYCLONIC SEPERATOR
HOLDING TANK
PAPER FILTER
4.2 GPM (0.26 l/SEC)
HOLDING TANKS
2.4 GPM (0.15 l/SEC)
PAPER FILTER
6.6 GPM (0.42 l/SEC)
MIXING TANKS
CITY WATER 0 GPM (0 l/SEC)
ENVIRONMENTAL PROTECTION AGENCY
FOUNDRY INDUSTRY STUDY
WASTEWATER TREATMENT SYSTEM
WATER FLOW DIAGRAM
DWN.12/14/78

FIGURE V-26

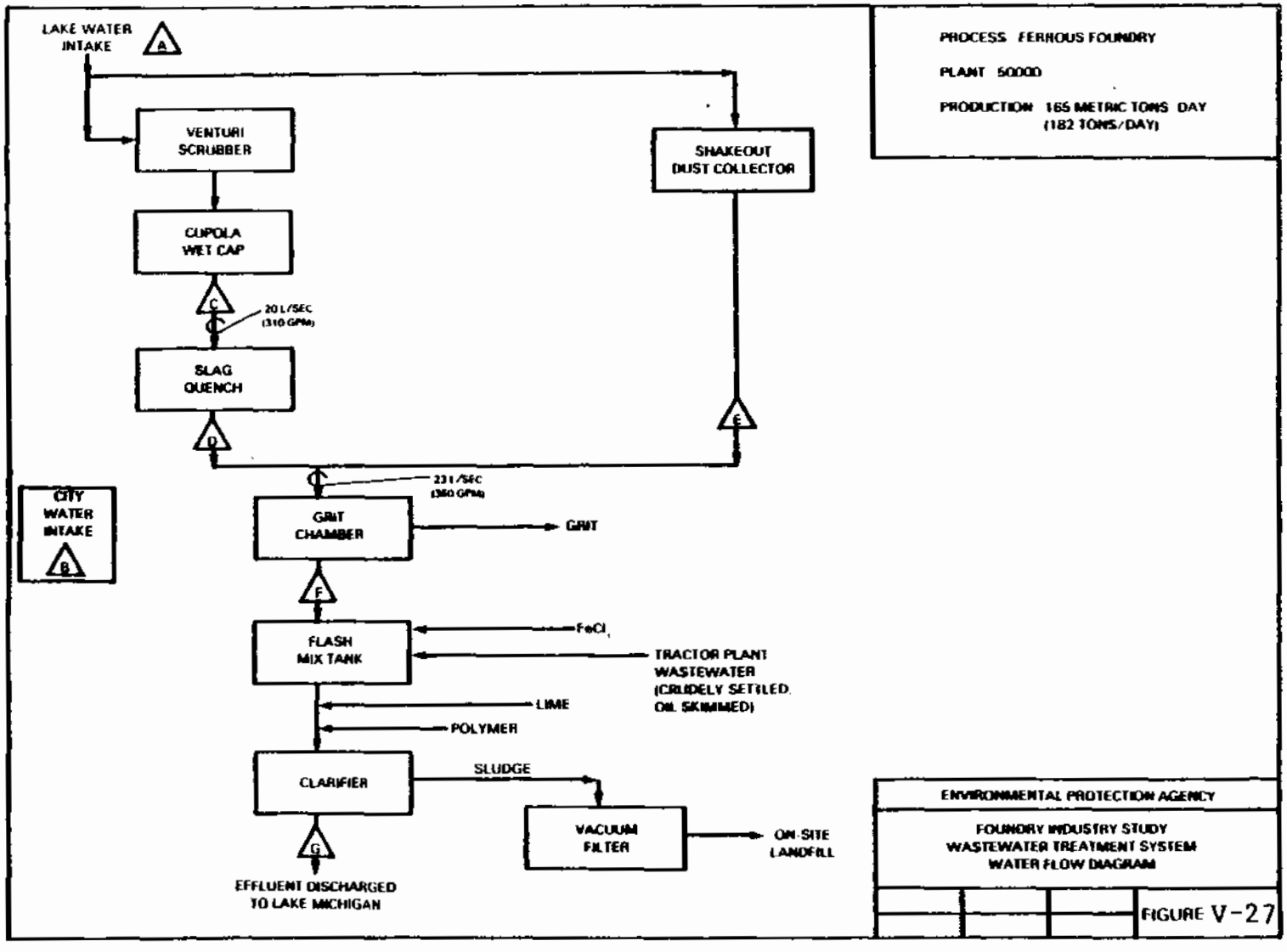
LAKE WATER INTAKE
A
VENTURI SCRUBBER
SHAKEOUT DUST COLLECTOR
CUPOLA WET CAP
C
20 L/SEC (310 GPM)
SLAG QUENCH
D
E
23 L/SEC (360 GPM)
CITY WATER INTAKE
B
GRIT CHAMBER
GRIT
F
FLASH MIX TANK
FeCl3
TRACTOR PLANT WASTEWATER (CRUDELY SETTLED, OIL SKIMMED)
LIME
POLYMER
CLARIFIER
SLUDGE
VACUUM FILTER
ON-SITE LANDFILL
G
EFFLUENT DISCHARGED TO LAKE MICHIGAN
PROCESS FERROUS FOUNDRY
PLANT 50000
PRODUCTION 165 METRIC TONS DAY (182 TONS/DAY)
ENVIRONMENTAL PROTECTION AGENCY
FOUNDRY INDUSTRY STUDY
WASTEWATER TREATMENT SYSTEM
WATER FLOW DIAGRAM
FIGURE V-27

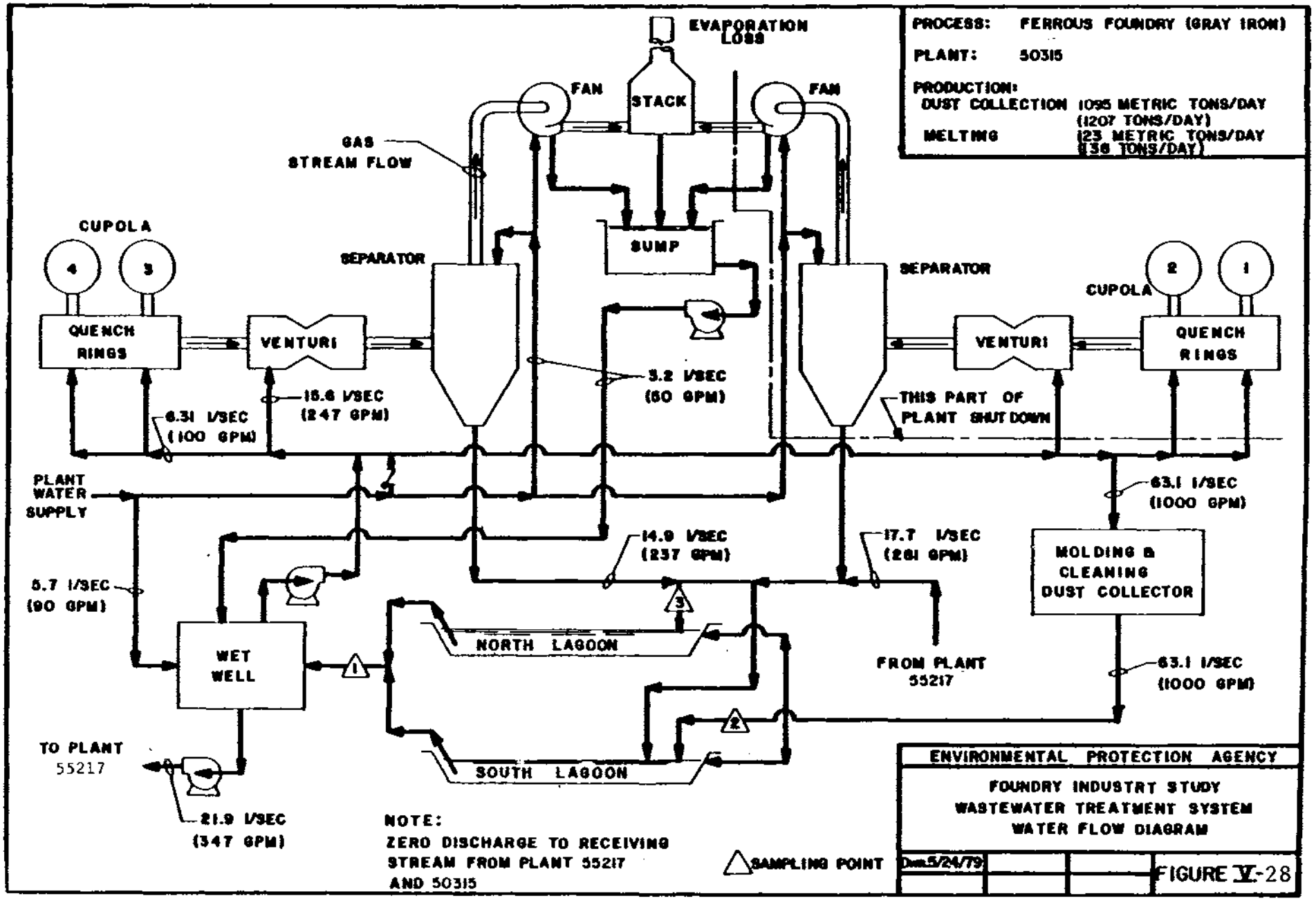
PROCESS: FERROUS FOUNDRY (GRAY IRON)
PLANT: 50315
PRODUCTION:
DUST COLLECTION 1095 METRIC TONS/DAY (1207 TONS/DAY)
MELTING 123 METRIC TONS/DAY (136 TONS/DAY)
EVAPORATION LOSS
FAN
STACK
FAN
GAS STREAM FLOW
CUPOLA
4
3
SEPARATOR
SUMP
SEPARATOR
CUPOLA
2
1
QUENCH RINGS
VENTURI
VENTURI
QUENCH RINGS
3.2 l/SEC (50 GPM)
15.6 l/SEC (247 GPM)
6.31 l/SEC (100 GPM)
THIS PART OF PLANT SHUT DOWN
PLANT WATER SUPPLY
63.1 l/SEC (1000 GPM)
14.9 l/SEC (237 GPM)
17.7 l/SEC (281 GPM)
MOLDING & CLEANING DUST COLLECTOR
5.7 l/SEC (90 GPM)
WET WELL
NORTH LAGOON
FROM PLANT 55217
63.1 l/SEC (1000 GPM)
TO PLANT 55217
SOUTH LAGOON
21.9 l/SEC (347 GPM)
NOTE:
ZERO DISCHARGE TO RECEIVING STREAM FROM PLANT 55217 AND 50315
SAMPLING POINT
ENVIRONMENTAL PROTECTION AGENCY
FOUNDRY INDUSTRY STUDY
WASTEWATER TREATMENT SYSTEM
WATER FLOW DIAGRAM
Date 5/24/79
FIGURE V-28

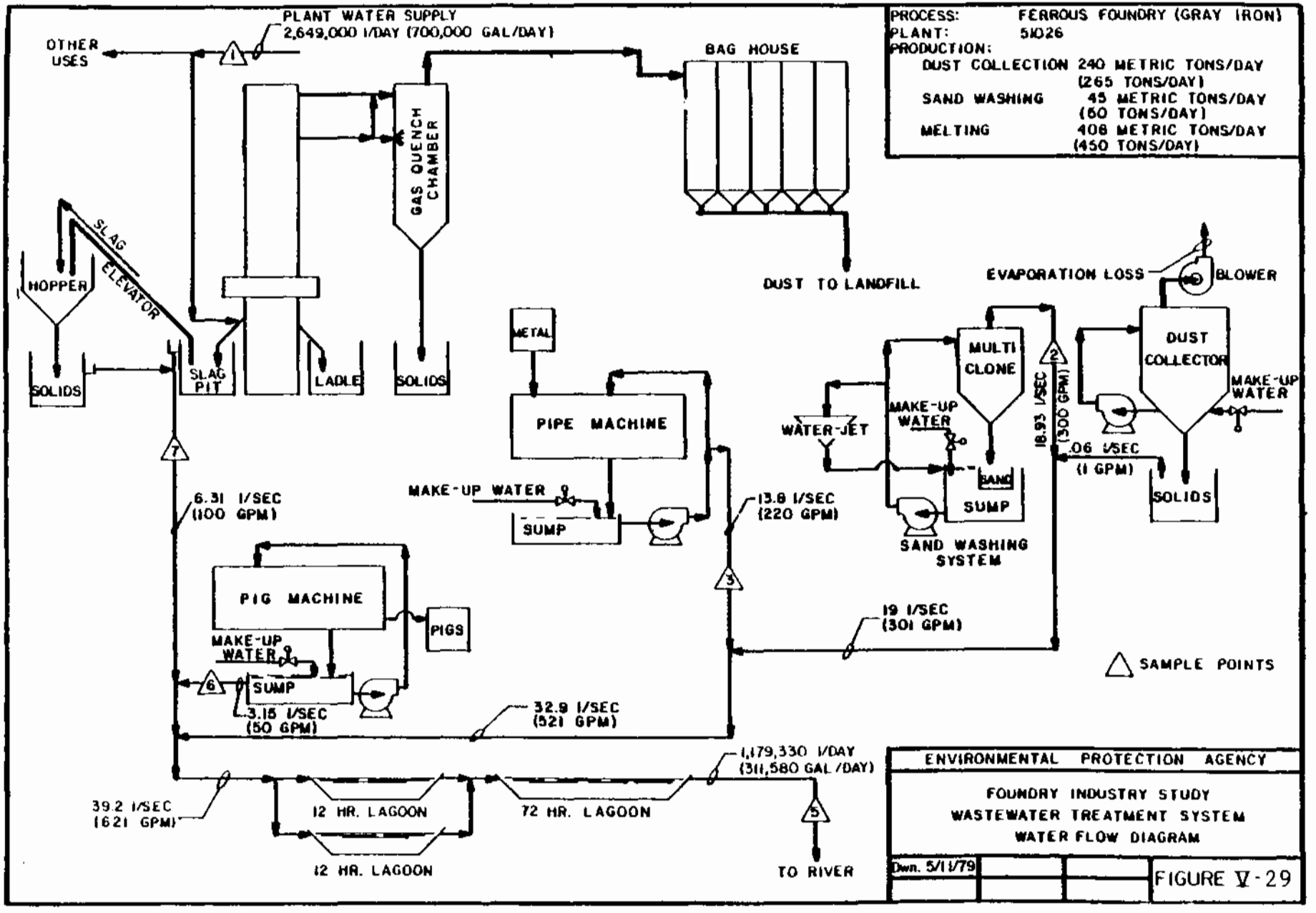
PROCESS: FERROUS FOUNDRY (GRAY IRON)
PLANT: 5I026
PRODUCTION:
DUST COLLECTION 240 METRIC TONS/DAY (265 TONS/DAY)
SAND WASHING 45 METRIC TONS/DAY (50 TONS/DAY)
MELTING 408 METRIC TONS/DAY (450 TONS/DAY)
PLANT WATER SUPPLY
2,649,000 I/DAY (700,000 GAL/DAY)
OTHER USES
BAG HOUSE
GAS QUENCH CHAMBER
DUST TO LANDFILL
EVAPORATION LOSS
BLOWER
SLAG
ELEVATOR
HOPPER
SOLIDS
SLAG PIT
LADLE
SOLIDS
METAL
PIPE MACHINE
MAKE-UP WATER
SUMP
MULTI CLONE
WATER-JET
MAKE-UP WATER
SAND
SUMP
SAND WASHING SYSTEM
18.93 I/SEC (300 GPM)
.06 I/SEC (1 GPM)
DUST COLLECTOR
MAKE-UP WATER
SOLIDS
6.31 I/SEC (100 GPM)
13.8 I/SEC (220 GPM)
PIG MACHINE
PIGS
MAKE-UP WATER
SUMP
3.15 I/SEC (50 GPM)
19 I/SEC (301 GPM)
SAMPLE POINTS
32.9 I/SEC (521 GPM)
1,179,330 I/DAY (311,580 GAL/DAY)
39.2 I/SEC (621 GPM)
12 HR. LAGOON
72 HR. LAGOON
12 HR. LAGOON
TO RIVER
ENVIRONMENTAL PROTECTION AGENCY
FOUNDRY INDUSTRY STUDY
WASTEWATER TREATMENT SYSTEM
WATER FLOW DIAGRAM
Dwn. 5/11/79
FIGURE V-29

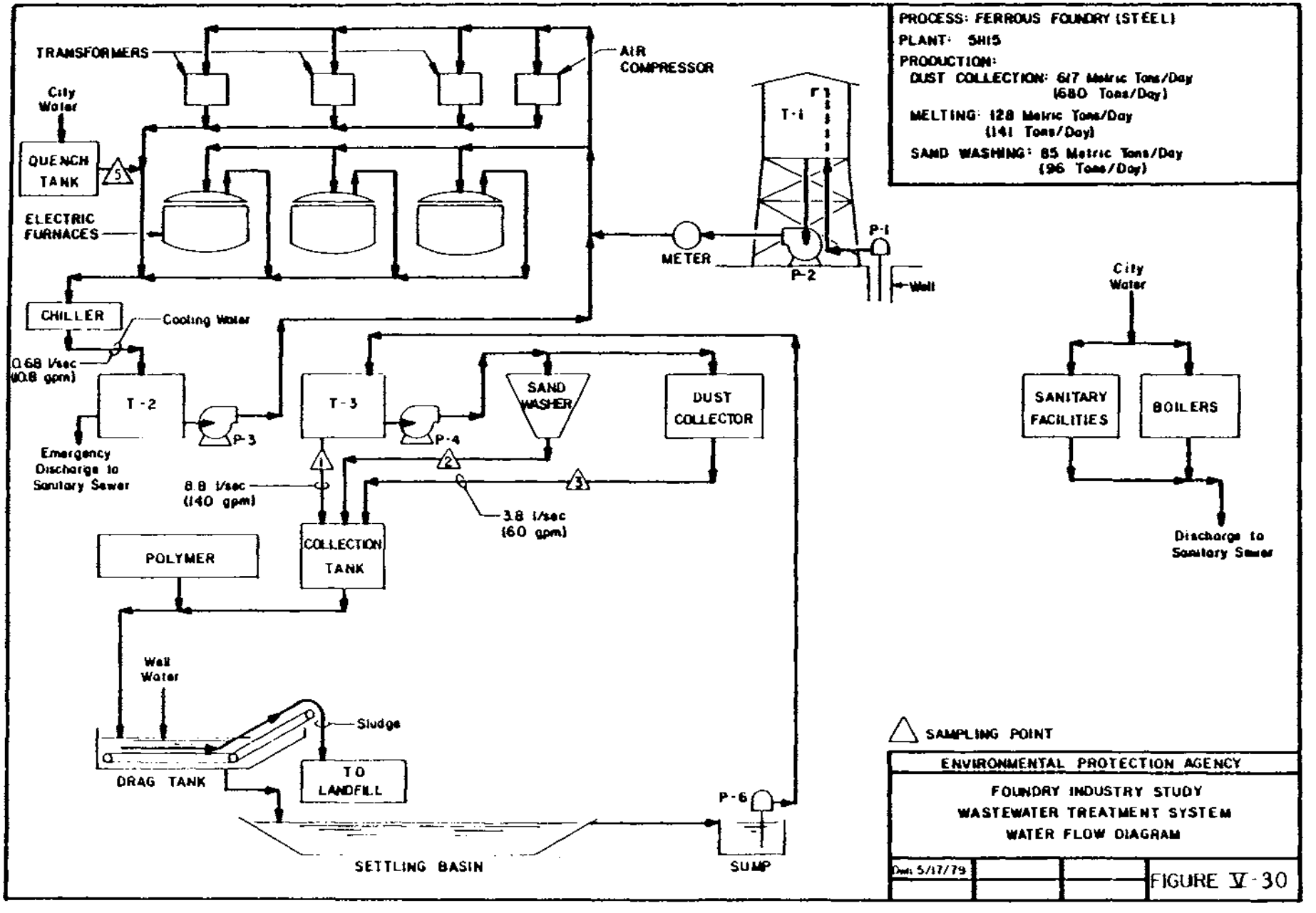
PROCESS: FERROUS FOUNDRY (STEEL)
PLANT: SIC 5
PRODUCTION:
DUST COLLECTION: 617 Metric Tons/Day (680 Tons/Day)
MELTING: 128 Metric Tons/Day (141 Tons/Day)
SAND WASHING: 85 Metric Tons/Day (96 Tons/Day)
TRANSFORMERS
AIR COMPRESSOR
City Water
QUENCH TANK
ELECTRIC FURNACES
T-1
METER
P-1
P-2
Well
CHILLER
Cooling Water
0.68 l/sec (10.8 gpm)
T-2
P-3
Emergency Discharge to Sanitary Sewer
T-3
P-4
SAND WASHER
DUST COLLECTOR
8.8 l/sec (140 gpm)
3.8 l/sec (60 gpm)
POLYMER
COLLECTION TANK
Well Water
Sludge
DRAG TANK
TO LANDFILL
P-6
SETTLING BASIN
SUMP
City Water
SANITARY FACILITIES
BOILERS
Discharge to Sanitary Sewer
SAMPLING POINT
ENVIRONMENTAL PROTECTION AGENCY
FOUNDRY INDUSTRY STUDY
WASTEWATER TREATMENT SYSTEM
WATER FLOW DIAGRAM
Date: 5/17/79
FIGURE V-30

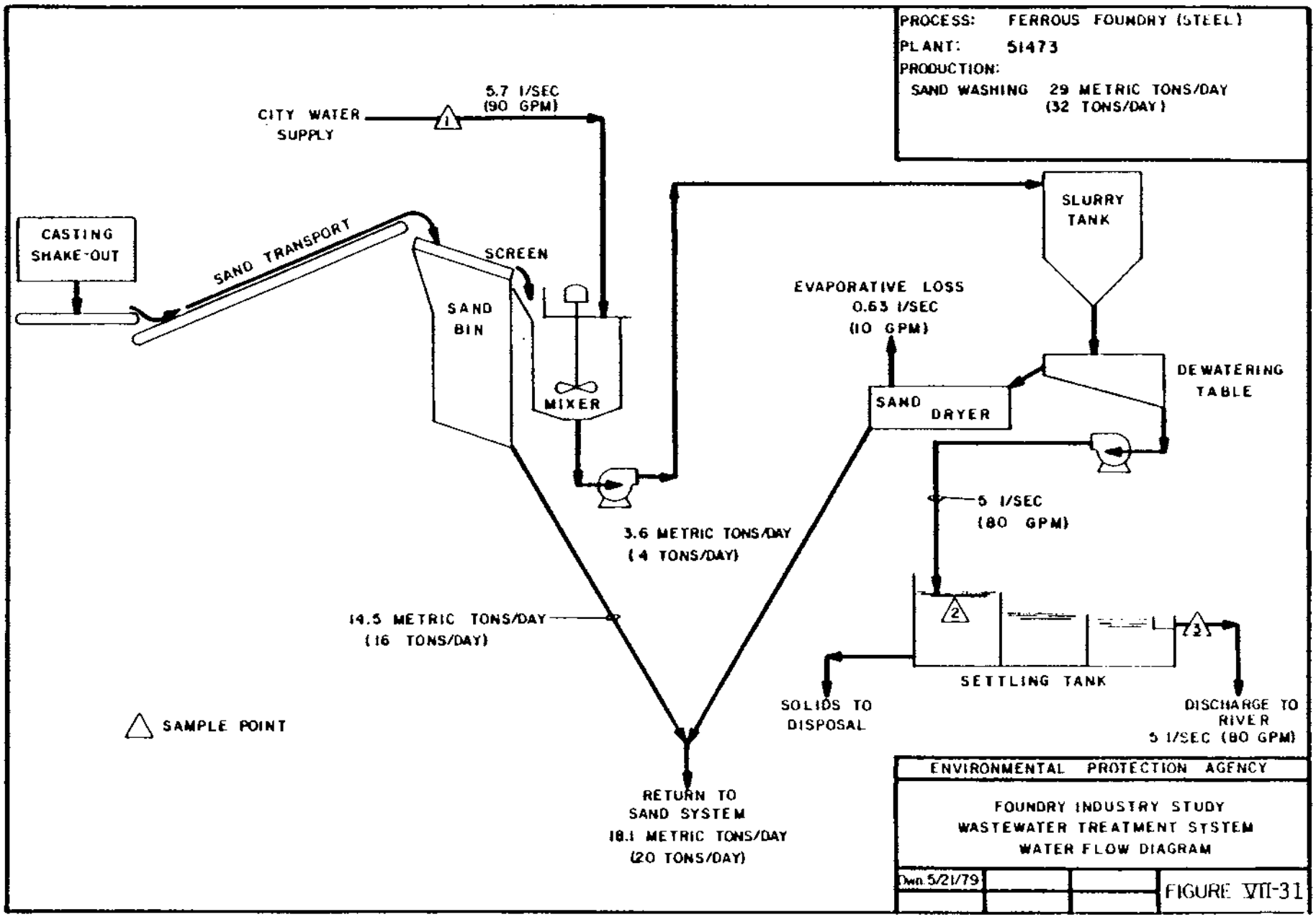
PROCESS: FERROUS FOUNDRY (STEEL)
PLANT: 51473
PRODUCTION:
SAND WASHING 29 METRIC TONS/DAY
(32 TONS/DAY)
CITY WATER SUPPLY
5.7 I/SEC (90 GPM)
1
CASTING SHAKE-OUT
SAND TRANSPORT
SCREEN
SAND BIN
MIXER
SLURRY TANK
EVAPORATIVE LOSS
0.63 I/SEC
(10 GPM)
SAND DRYER
DEWATERING TABLE
5 I/SEC
(80 GPM)
3.6 METRIC TONS/DAY
(4 TONS/DAY)
14.5 METRIC TONS/DAY
(16 TONS/DAY)
2
3
SETTLING TANK
SOLIDS TO DISPOSAL
DISCHARGE TO RIVER
5 I/SEC (80 GPM)
SAMPLE POINT
RETURN TO SAND SYSTEM
18.1 METRIC TONS/DAY
(20 TONS/DAY)
ENVIRONMENTAL PROTECTION AGENCY
FOUNDRY INDUSTRY STUDY
WASTEWATER TREATMENT SYSTEM
WATER FLOW DIAGRAM
Dwn 5/21/79
FIGURE VII-31

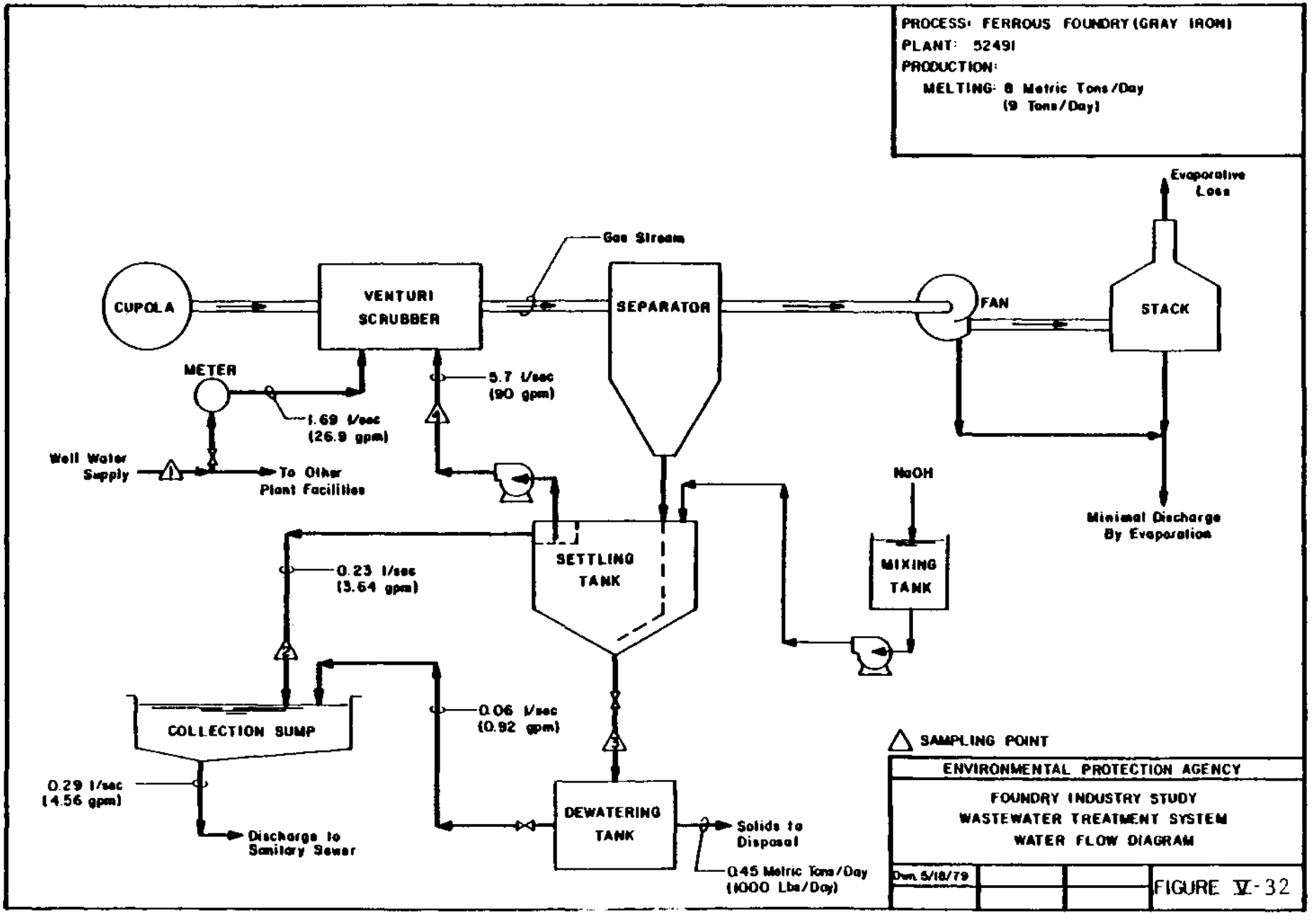
PROCESS: FERROUS FOUNDRY (GRAY IRON)
PLANT: 52491
PRODUCTION:
MELTING: 8 Metric Tons/Day
(9 Tons/Day)
Evaporative Loss
Gas Stream
CUPOLA
VENTURI SCRUBBER
SEPARATOR
FAN
STACK
METER
5.7 l/sec (90 gpm)
1.69 l/sec (26.9 gpm)
Well Water Supply
To Other Plant Facilities
NaOH
Minimal Discharge By Evaporation
SETTLING TANK
MIXING TANK
0.23 l/sec (3.64 gpm)
COLLECTION SUMP
0.06 l/sec (0.92 gpm)
0.29 l/sec (4.56 gpm)
Discharge to Sanitary Sewer
DEWATERING TANK
Solids to Disposal
0.45 Metric Tons/Day (1000 Lbs/Day)
SAMPLING POINT
ENVIRONMENTAL PROTECTION AGENCY
FOUNDRY INDUSTRY STUDY
WASTEWATER TREATMENT SYSTEM
WATER FLOW DIAGRAM
Dwn. 5/18/79
FIGURE V-32

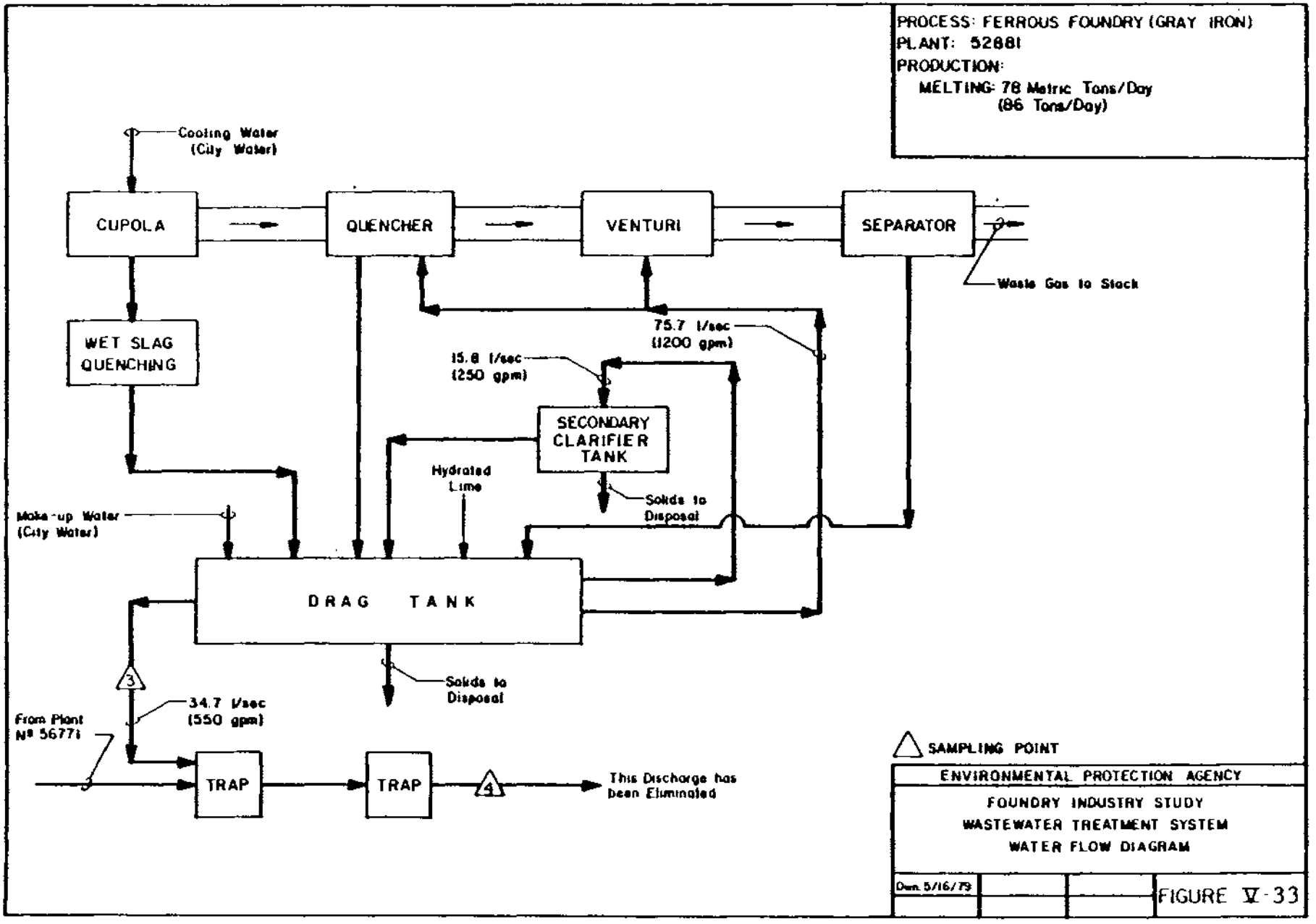
PROCESS: FERROUS FOUNDRY (GRAY IRON)
PLANT: 52881
PRODUCTION:
MELTING: 78 Metric Tons/Day
(86 Tons/Day)
Cooling Water
(City Water)
CUPOLA
QUENCHER
VENTURI
SEPARATOR
Waste Gas to Stack
WET SLAG
QUENCHING
75.7 l/sec
(1200 gpm)
15.8 l/sec
(250 gpm)
SECONDARY
CLARIFIER
TANK
Hydrated
Lime
Solids to
Disposal
Make-up Water
(City Water)
DRAG TANK
Solids to
Disposal
3
34.7 l/sec
(550 gpm)
From Plant
N° 56771
TRAP
TRAP
4
This Discharge has
Been Eliminated
SAMPLING POINT
ENVIRONMENTAL PROTECTION AGENCY
FOUNDRY INDUSTRY STUDY
WASTEWATER TREATMENT SYSTEM
WATER FLOW DIAGRAM
Dwn. 5/16/79
FIGURE V-33

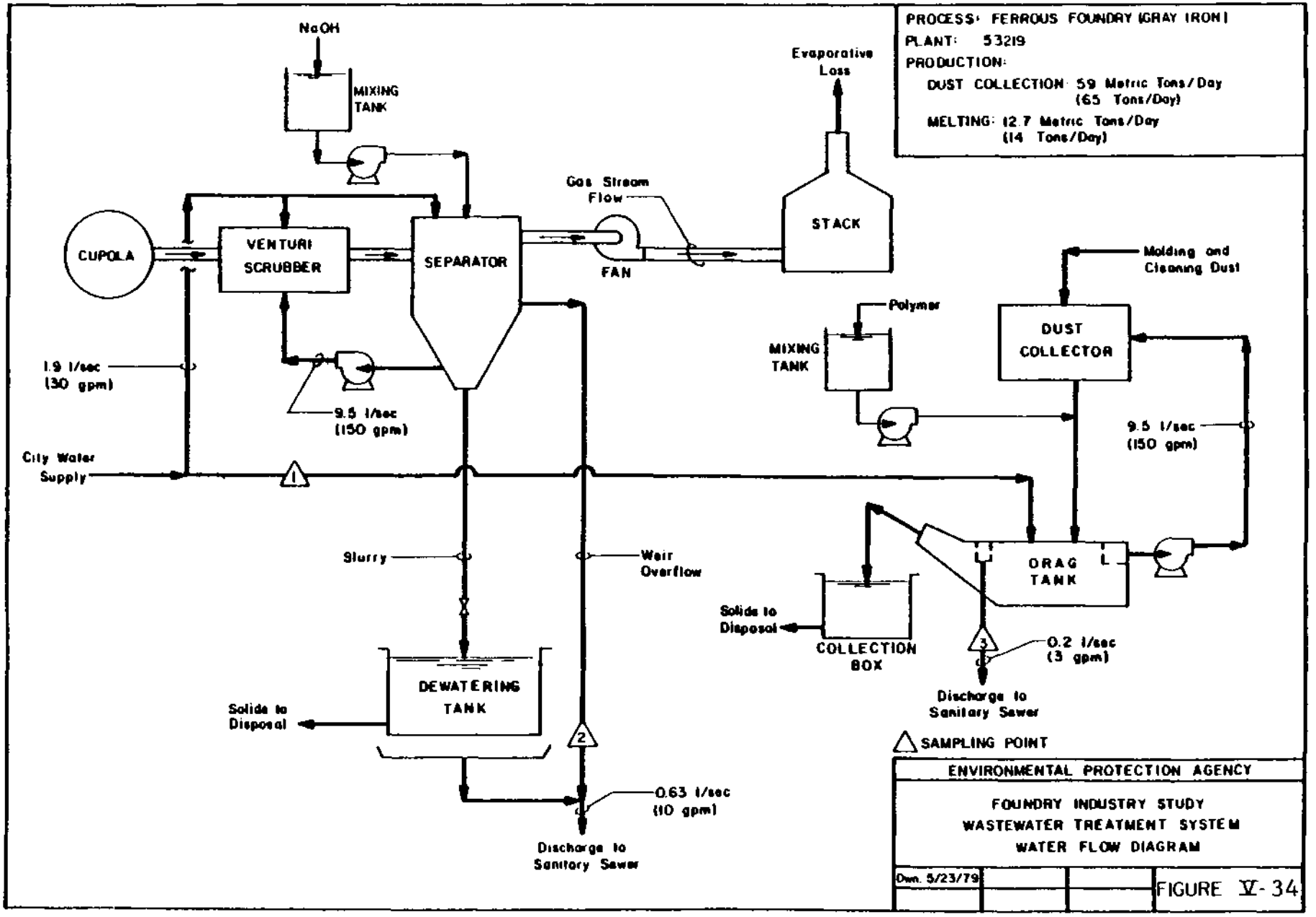
PROCESS: FERROUS FOUNDRY (GRAY IRON)
PLANT: 53219
PRODUCTION:
DUST COLLECTION: 59 Metric Tons/Day (65 Tons/Day)
MELTING: 12.7 Metric Tons/Day (14 Tons/Day)
NaOH
MIXING TANK
Evaporative Loss
Gas Stream Flow
CUPOLA
VENTURI SCRUBBER
SEPARATOR
FAN
STACK
Molding and Cleaning Dust
Polymer
MIXING TANK
DUST COLLECTOR
1.9 l/sec (30 gpm)
9.5 l/sec (150 gpm)
9.5 l/sec (150 gpm)
City Water Supply
1
Slurry
Weir Overflow
DRAG TANK
Solids to Disposal
COLLECTION BOX
3
0.2 l/sec (3 gpm)
Discharge to Sanitary Sewer
DEWATERING TANK
Solids to Disposal
2
0.63 l/sec (10 gpm)
Discharge to Sanitary Sewer
SAMPLING POINT
ENVIRONMENTAL PROTECTION AGENCY
FOUNDRY INDUSTRY STUDY
WASTEWATER TREATMENT SYSTEM
WATER FLOW DIAGRAM
Dwn. 5/23/79
FIGURE V-34

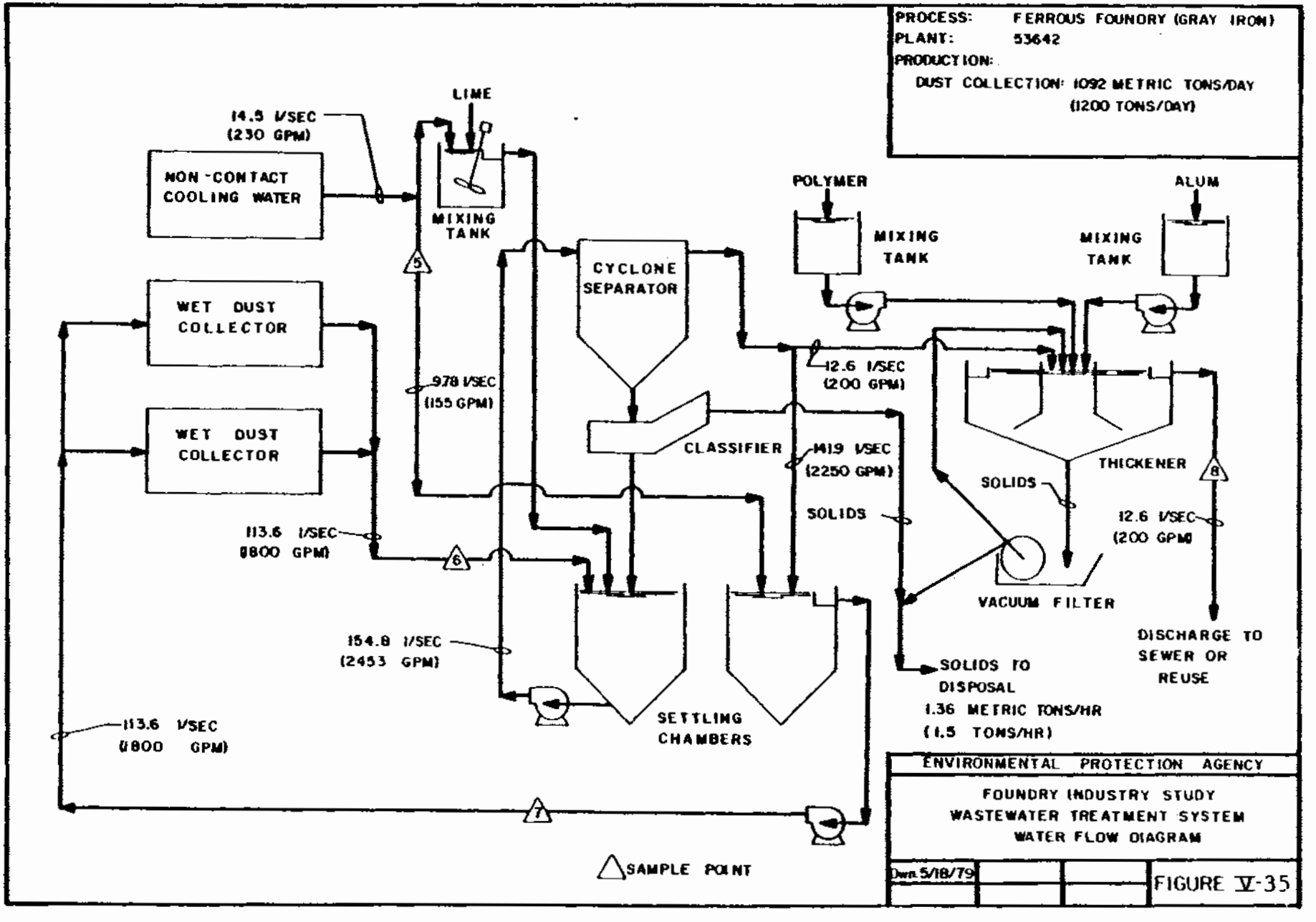
PROCESS: FERROUS FOUNDRY (GRAY IRON)
PLANT: 53642
PRODUCTION:
DUST COLLECTION: 1092 METRIC TONS/DAY (1200 TONS/DAY)
LIME
14.5 l/SEC (230 GPM)
NON-CONTACT COOLING WATER
MIXING TANK
WET DUST COLLECTOR
WET DUST COLLECTOR
CYCLONE SEPARATOR
POLYMER
MIXING TANK
ALUM
MIXING TANK
12.6 l/SEC (200 GPM)
97.8 l/SEC (155 GPM)
CLASSIFIER
141.9 l/SEC (2250 GPM)
SOLIDS
THICKENER
SOLIDS
12.6 l/SEC (200 GPM)
113.6 l/SEC (1800 GPM)
VACUUM FILTER
154.8 l/SEC (2453 GPM)
SETTLING CHAMBERS
DISCHARGE TO SEWER OR REUSE
SOLIDS TO DISPOSAL
1.36 METRIC TONS/HR (1.5 TONS/HR)
113.6 l/SEC (1800 GPM)
SAMPLE POINT
ENVIRONMENTAL PROTECTION AGENCY
FOUNDRY INDUSTRY STUDY
WASTEWATER TREATMENT SYSTEM
WATER FLOW DIAGRAM
Dwn 5/18/79
FIGURE V-35

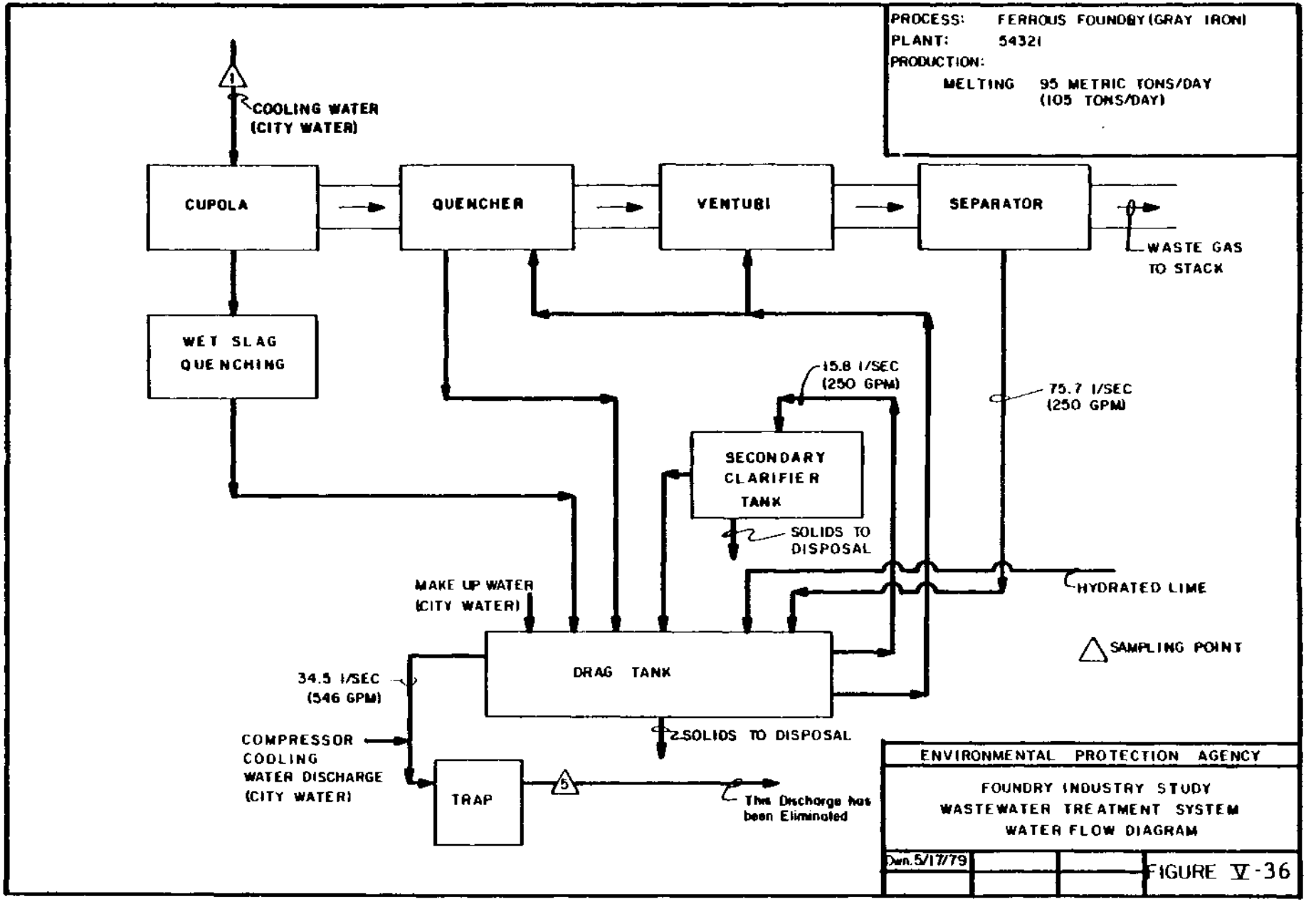
PROCESS: FERROUS FOUNDRY (GRAY IRON)
PLANT: 54321
PRODUCTION:
MELTING 95 METRIC TONS/DAY (105 TONS/DAY)
1
COOLING WATER (CITY WATER)
CUPOLA
QUENCHER
VENTURI
SEPARATOR
WASTE GAS TO STACK
WET SLAG QUENCHING
15.8 l/SEC (250 GPM)
75.7 l/SEC (250 GPM)
SECONDARY CLARIFIER TANK
SOLIDS TO DISPOSAL
MAKE UP WATER (CITY WATER)
HYDRATED LIME
SAMPLING POINT
DRAG TANK
34.5 l/SEC (546 GPM)
2 SOLIDS TO DISPOSAL
COMPRESSOR COOLING WATER DISCHARGE (CITY WATER)
TRAP
5
This Discharge has been Eliminated
ENVIRONMENTAL PROTECTION AGENCY
FOUNDRY INDUSTRY STUDY
WASTEWATER TREATMENT SYSTEM
WATER FLOW DIAGRAM
Dwn. 5/17/79
FIGURE V-36

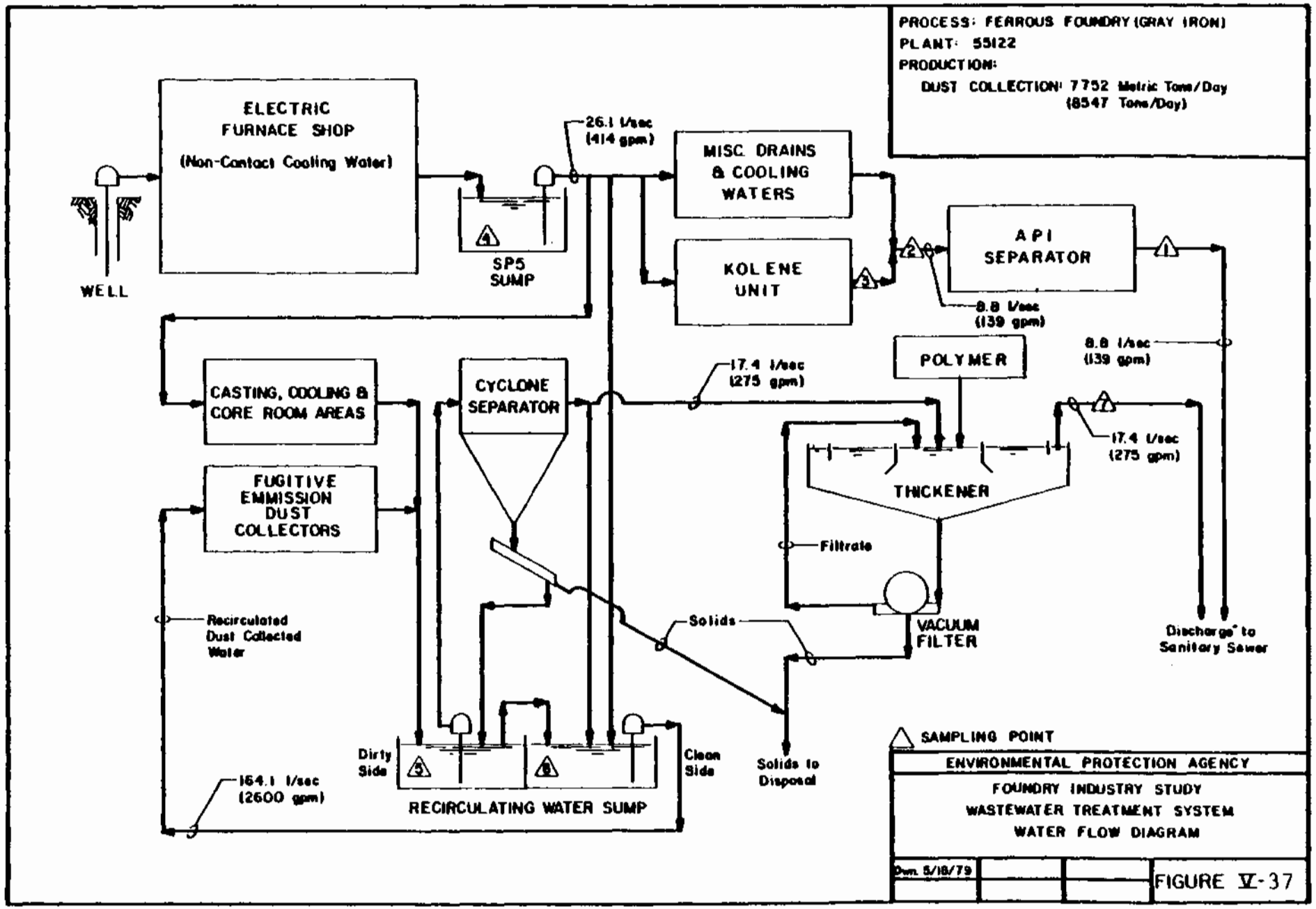
PROCESS: FERROUS FOUNDRY (GRAY IRON)
PLANT: 55122
PRODUCTION:
DUST COLLECTION: 7752 Metric Tons/Day
(8547 Tons/Day)
ELECTRIC FURNACE SHOP
(Non-Contact Cooling Water)
WELL
SP5 SUMP
26.1 l/sec (414 gpm)
MISC. DRAINS & COOLING WATERS
KOLENE UNIT
API SEPARATOR
8.8 l/sec (139 gpm)
POLYMER
8.8 l/sec (139 gpm)
CASTING, COOLING & CORE ROOM AREAS
CYCLONE SEPARATOR
17.4 l/sec (275 gpm)
FUGITIVE EMMISSION DUST COLLECTORS
THICKENER
17.4 l/sec (275 gpm)
Filtrate
Recirculated Dust Collected Water
Solids
VACUUM FILTER
Discharge to Sanitary Sewer
Dirty Side
Clean Side
164.1 l/sec (2600 gpm)
RECIRCULATING WATER SUMP
Solids to Disposal
SAMPLING POINT
ENVIRONMENTAL PROTECTION AGENCY
FOUNDRY INDUSTRY STUDY
WASTEWATER TREATMENT SYSTEM
WATER FLOW DIAGRAM
Dwn. 5/18/79
FIGURE V-37

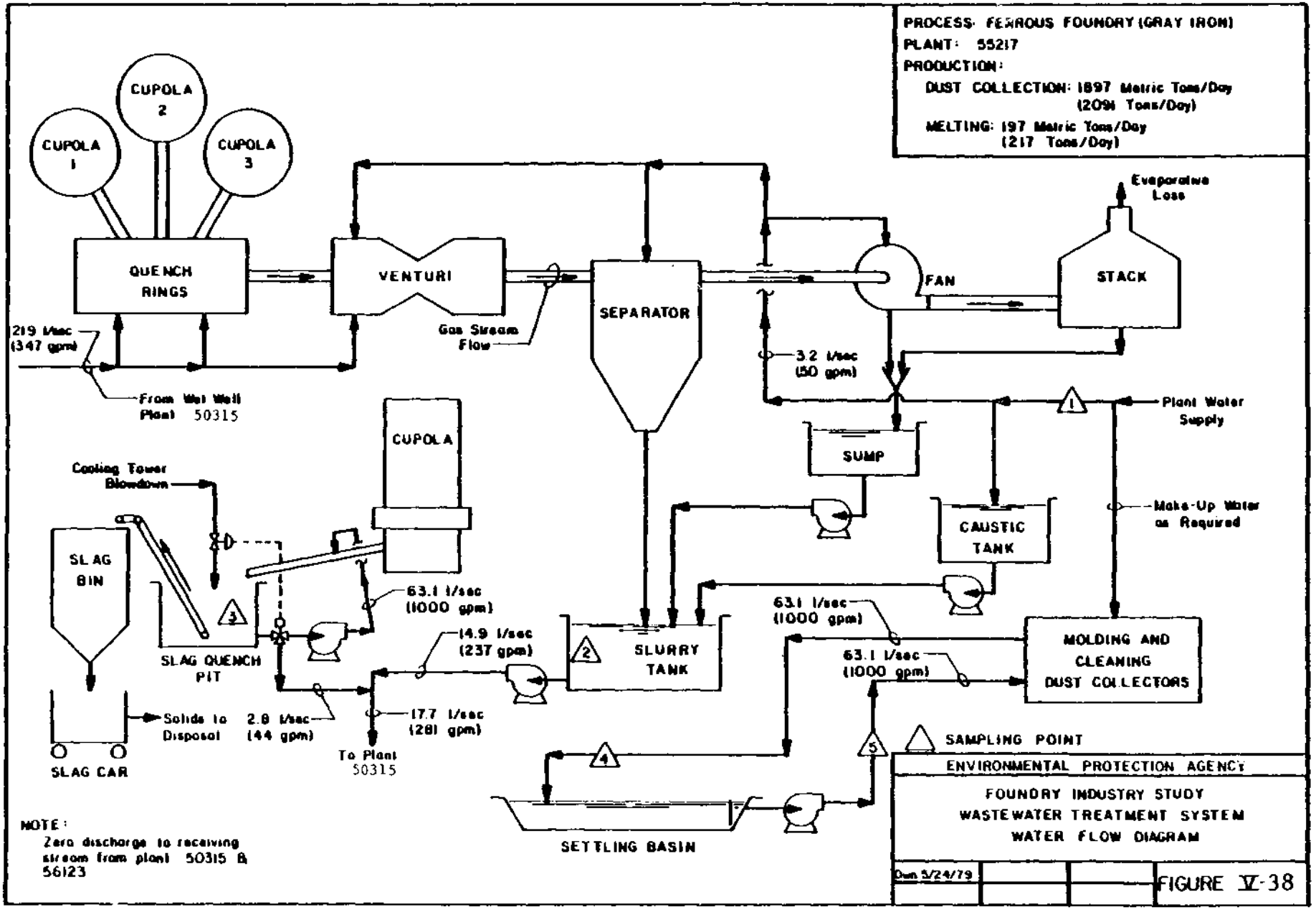
PROCESS: FERROUS FOUNDRY (GRAY IRON)
PLANT: 55217
PRODUCTION:
DUST COLLECTION: 1897 Metric Tons/Day (2094 Tons/Day)
MELTING: 197 Metric Tons/Day (217 Tons/Day)
CUPOLA 1
CUPOLA 2
CUPOLA 3
QUENCH RINGS
VENTURI
SEPARATOR
FAN
STACK
Evaporative Loss
219 l/sec (347 gpm)
From Wet Well Plant 50315
Gas Stream Flow
3.2 l/sec (50 gpm)
Plant Water Supply
SUMP
CUPOLA
Cooling Tower Blowdown
SLAG BIN
SLAG QUENCH PIT
63.1 l/sec (1000 gpm)
14.9 l/sec (237 gpm)
SLURRY TANK
CAUSTIC TANK
Make-Up Water as Required
63.1 l/sec (1000 gpm)
63.1 l/sec (1000 gpm)
MOLDING AND CLEANING DUST COLLECTORS
Solids to Disposal
2.8 l/sec (44 gpm)
17.7 l/sec (281 gpm)
To Plant 50315
SLAG CAR
SAMPLING POINT
SETTLING BASIN
NOTE:
Zero discharge to receiving stream from plant 50315 & 56123
ENVIRONMENTAL PROTECTION AGENCY
FOUNDRY INDUSTRY STUDY
WASTEWATER TREATMENT SYSTEM
WATER FLOW DIAGRAM
Dwn 5/24/79
FIGURE V-38

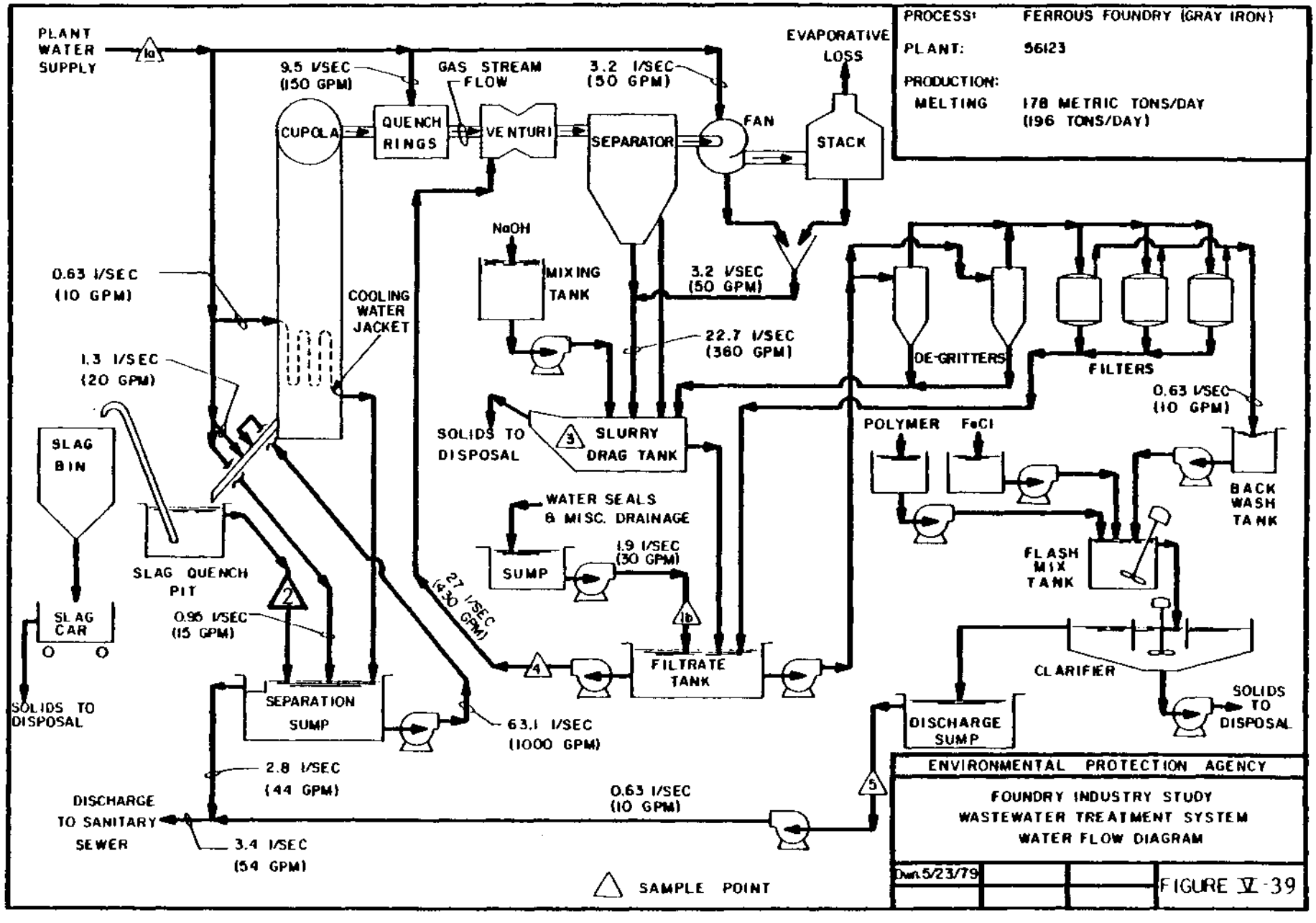
PROCESS: FERROUS FOUNDRY (GRAY IRON)
PLANT: 56123
PRODUCTION:
MELTING 178 METRIC TONS/DAY (196 TONS/DAY)
PLANT WATER SUPPLY
1a
9.5 l/SEC (150 GPM)
GAS STREAM FLOW
3.2 l/SEC (50 GPM)
EVAPORATIVE LOSS
CUPOLA
QUENCH RINGS
VENTURI
SEPARATOR
FAN
STACK
NaOH
MIXING TANK
3.2 l/SEC (50 GPM)
0.63 l/SEC (10 GPM)
COOLING WATER JACKET
22.7 l/SEC (360 GPM)
DE-GRITTERS
FILTERS
1.3 l/SEC (20 GPM)
0.63 l/SEC (10 GPM)
SOLIDS TO DISPOSAL
3 SLURRY DRAG TANK
POLYMER
FeCl
SLAG BIN
WATER SEALS & MISC. DRAINAGE
BACK WASH TANK
SUMP
1.9 l/SEC (30 GPM)
FLASH MIX TANK
SLAG QUENCH PIT
2
27 l/SEC (430 GPM)
SLAG CAR
0.95 l/SEC (15 GPM)
1b
4
FILTRATE TANK
CLARIFIER
SOLIDS TO DISPOSAL
SEPARATION SUMP
63.1 l/SEC (1000 GPM)
DISCHARGE SUMP
2.8 l/SEC (44 GPM)
0.63 l/SEC (10 GPM)
5
DISCHARGE TO SANITARY SEWER
3.4 l/SEC (54 GPM)
SAMPLE POINT
ENVIRONMENTAL PROTECTION AGENCY
FOUNDRY INDUSTRY STUDY
WASTEWATER TREATMENT SYSTEM
WATER FLOW DIAGRAM
Dwn 5/23/79
FIGURE V-39

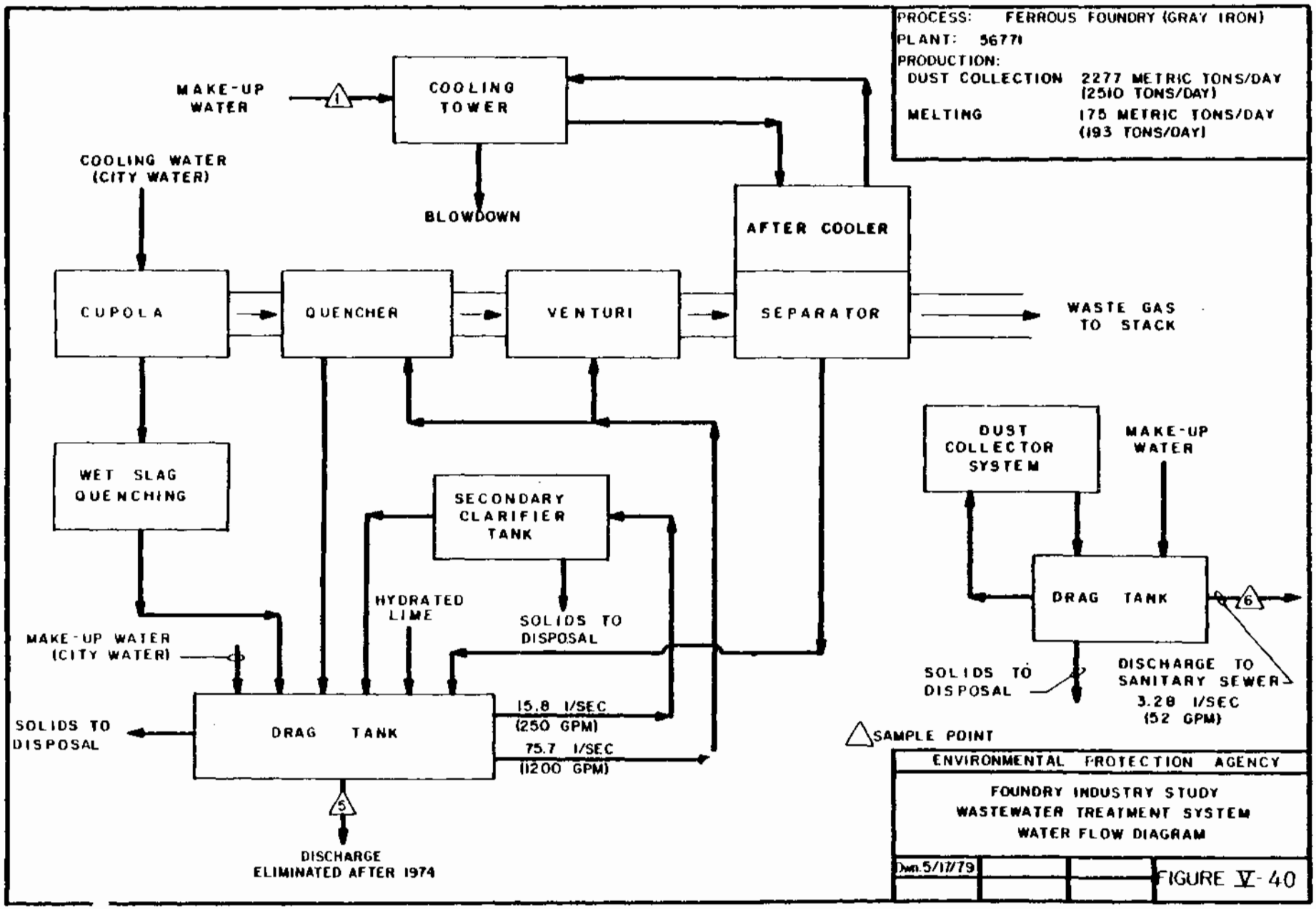
PROCESS: FERROUS FOUNDRY (GRAY IRON)
PLANT: 56771
PRODUCTION:
DUST COLLECTION 2277 METRIC TONS/DAY (2510 TONS/DAY)
MELTING 175 METRIC TONS/DAY (193 TONS/DAY)
MAKE-UP WATER
1
COOLING TOWER
BLOWDOWN
COOLING WATER (CITY WATER)
AFTER COOLER
CUPOLA
QUENCHER
VENTURI
SEPARATOR
WASTE GAS TO STACK
WET SLAG QUENCHING
SECONDARY CLARIFIER TANK
DUST COLLECTOR SYSTEM
MAKE-UP WATER
HYDRATED LIME
SOLIDS TO DISPOSAL
DRAG TANK
6
MAKE-UP WATER (CITY WATER)
SOLIDS TO DISPOSAL
DISCHARGE TO SANITARY SEWER
3.28 l/SEC (52 GPM)
15.8 l/SEC (250 GPM)
75.7 l/SEC (1200 GPM)
SOLIDS TO DISPOSAL
DRAG TANK
5
SAMPLE POINT
DISCHARGE ELIMINATED AFTER 1974
ENVIRONMENTAL PROTECTION AGENCY
FOUNDRY INDUSTRY STUDY
WASTEWATER TREATMENT SYSTEM
WATER FLOW DIAGRAM
Dwn. 5/17/79
FIGURE V-40

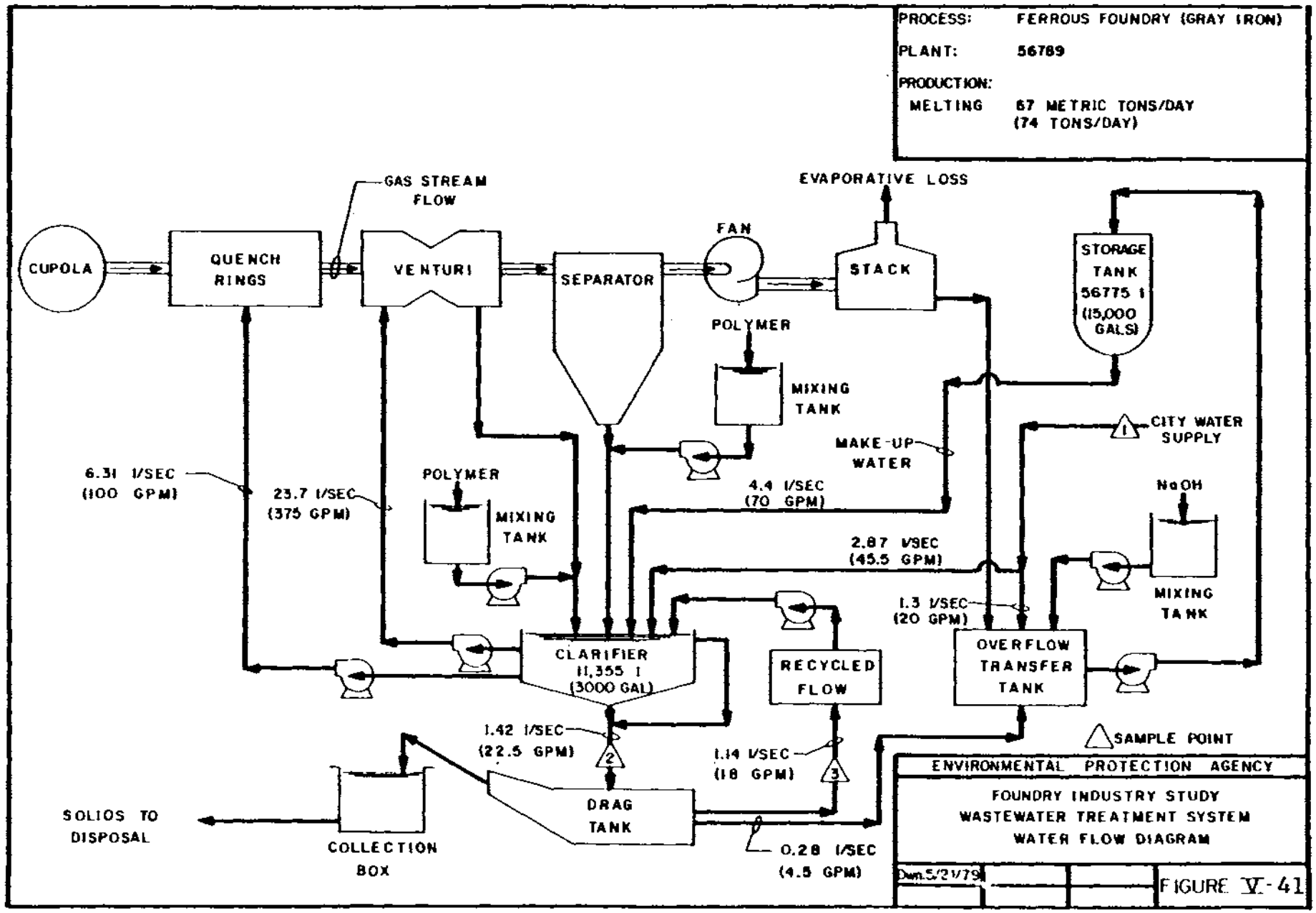
PROCESS: FERROUS FOUNDRY (GRAY IRON)
PLANT: 56789
PRODUCTION:
MELTING 67 METRIC TONS/DAY (74 TONS/DAY)
CUPOLA
QUENCH RINGS
GAS STREAM FLOW
VENTURI
SEPARATOR
FAN
EVAPORATIVE LOSS
STACK
STORAGE TANK 56775 l (15,000 GALS)
POLYMER
MIXING TANK
CITY WATER SUPPLY
MAKE-UP WATER
6.31 l/SEC (100 GPM)
23.7 l/SEC (375 GPM)
POLYMER
MIXING TANK
4.4 l/SEC (70 GPM)
NaOH
2.87 l/SEC (45.5 GPM)
MIXING TANK
1.3 l/SEC (20 GPM)
CLARIFIER 11,355 l (3000 GAL)
RECYCLED FLOW
OVERFLOW TRANSFER TANK
1.42 l/SEC (22.5 GPM)
1.14 l/SEC (18 GPM)
SAMPLE POINT
SOLIDS TO DISPOSAL
COLLECTION BOX
DRAG TANK
0.28 l/SEC (4.5 GPM)
ENVIRONMENTAL PROTECTION AGENCY
FOUNDRY INDUSTRY STUDY
WASTEWATER TREATMENT SYSTEM
WATER FLOW DIAGRAM
Dwn.5/21/79
FIGURE V-41

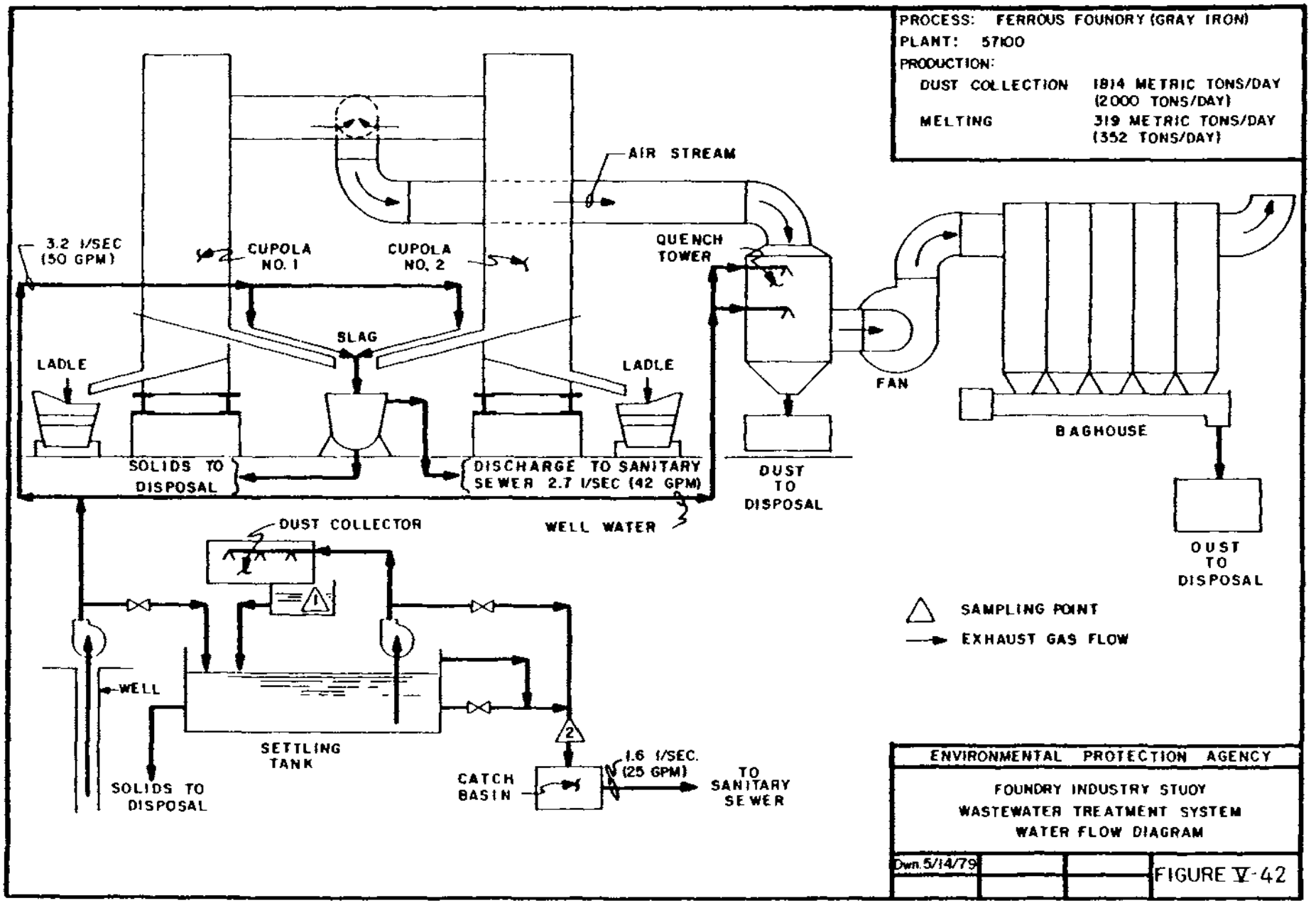
PROCESS: FERROUS FOUNDRY (GRAY IRON)
PLANT: 57100
PRODUCTION:
DUST COLLECTION 1814 METRIC TONS/DAY (2000 TONS/DAY)
MELTING 319 METRIC TONS/DAY (352 TONS/DAY)
AIR STREAM
3.2 l/SEC (50 GPM)
CUPOLA NO. 1
CUPOLA NO. 2
QUENCH TOWER
SLAG
LADLE
LADLE
FAN
BAGHOUSE
SOLIDS TO DISPOSAL
DISCHARGE TO SANITARY SEWER 2.7 l/SEC (42 GPM)
DUST TO DISPOSAL
WELL WATER
DUST TO DISPOSAL
DUST COLLECTOR
SAMPLING POINT
EXHAUST GAS FLOW
WELL
SETTLING TANK
SOLIDS TO DISPOSAL
CATCH BASIN
1.6 l/SEC. (25 GPM)
TO SANITARY SEWER
ENVIRONMENTAL PROTECTION AGENCY
FOUNDRY INDUSTRY STUDY
WASTEWATER TREATMENT SYSTEM
WATER FLOW DIAGRAM
Dwn. 5/14/79
FIGURE V-42

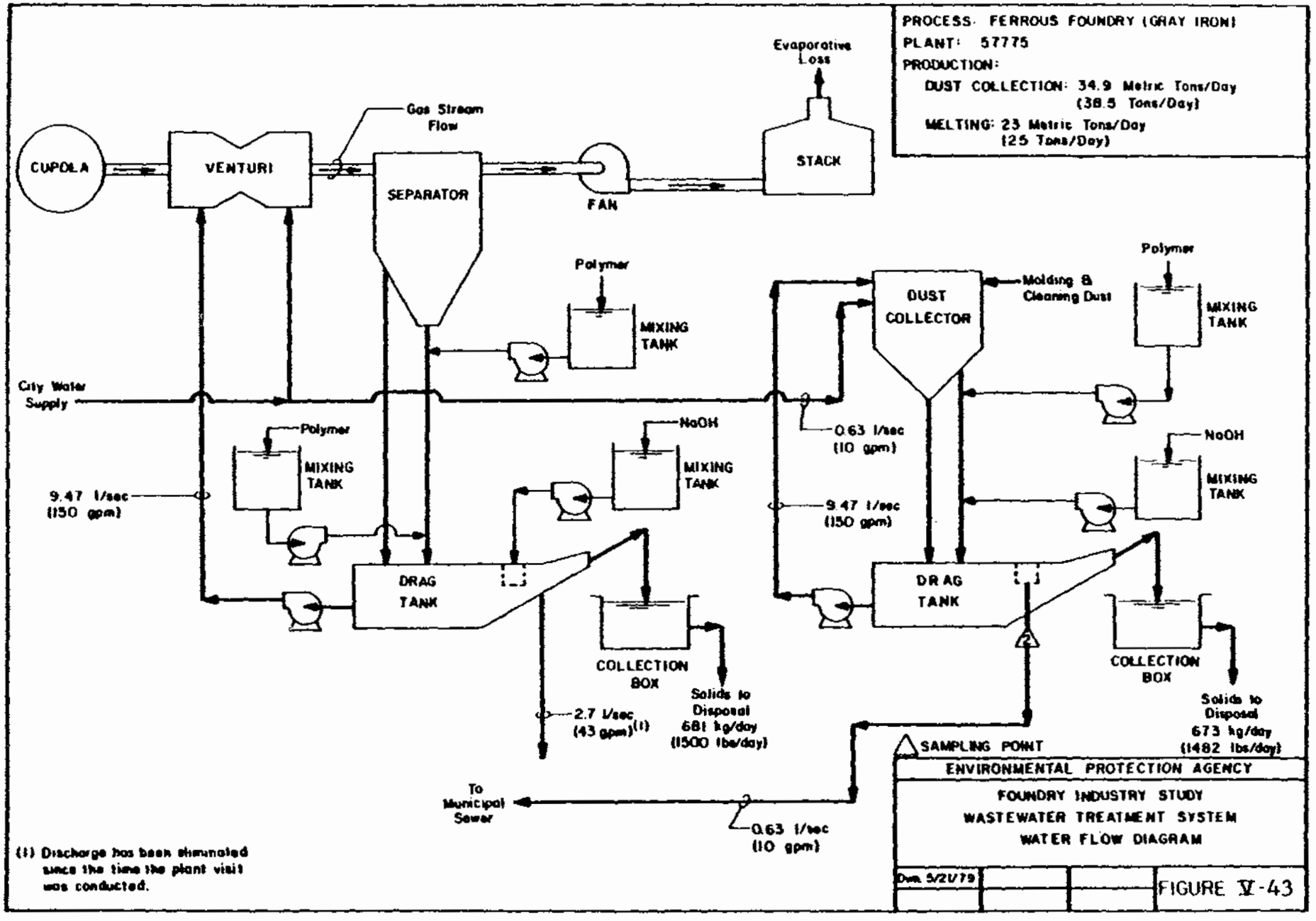
PROCESS: FERROUS FOUNDRY (GRAY IRON)
PLANT: 57775
PRODUCTION:
DUST COLLECTION: 34.9 Metric Tons/Day (38.5 Tons/Day)
MELTING: 23 Metric Tons/Day (25 Tons/Day)
Evaporative Loss
Gas Stream Flow
CUPOLA
VENTURI
SEPARATOR
FAN
STACK
Polymer
MIXING TANK
DUST COLLECTOR
Molding & Cleaning Dust
City Water Supply
0.63 l/sec (10 gpm)
9.47 l/sec (150 gpm)
NaOH
DRAG TANK
COLLECTION BOX
Solids to Disposal 681 kg/day (1500 lbs/day)
2.7 l/sec (43 gpm)(1)
To Municipal Sewer
0.63 l/sec (10 gpm)
Solids to Disposal 673 kg/day (1482 lbs/day)
SAMPLING POINT
(1) Discharge has been eliminated since the time the plant visit was conducted.
ENVIRONMENTAL PROTECTION AGENCY
FOUNDRY INDUSTRY STUDY
WASTEWATER TREATMENT SYSTEM
WATER FLOW DIAGRAM
Dwn. 5/21/79
FIGURE V-43

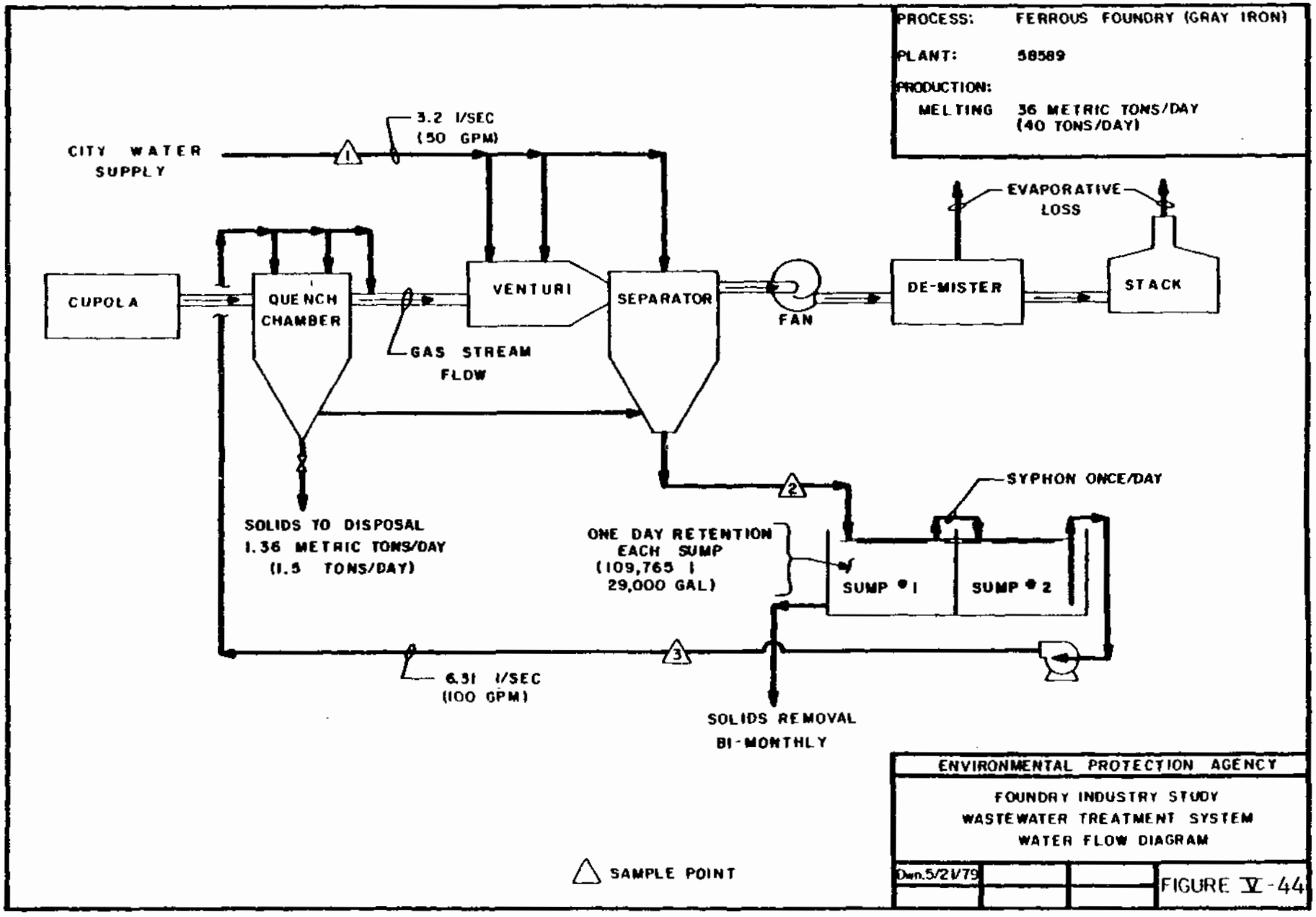
PROCESS: FERROUS FOUNDRY (GRAY IRON)
PLANT: 58589
PRODUCTION:
MELTING 36 METRIC TONS/DAY (40 TONS/DAY)
CITY WATER SUPPLY
3.2 l/SEC (50 GPM)
1
EVAPORATIVE LOSS
CUPOLA
QUENCH CHAMBER
VENTURI
SEPARATOR
FAN
DE-MISTER
STACK
GAS STREAM FLOW
SOLIDS TO DISPOSAL
1.36 METRIC TONS/DAY
(1.5 TONS/DAY)
2
SYPHON ONCE/DAY
ONE DAY RETENTION EACH SUMP
(109,765 l 29,000 GAL)
SUMP #1
SUMP #2
3
6.31 l/SEC (100 GPM)
SOLIDS REMOVAL BI-MONTHLY
SAMPLE POINT
ENVIRONMENTAL PROTECTION AGENCY
FOUNDRY INDUSTRY STUDY
WASTEWATER TREATMENT SYSTEM
WATER FLOW DIAGRAM
Dwn.5/21/79
FIGURE V-44

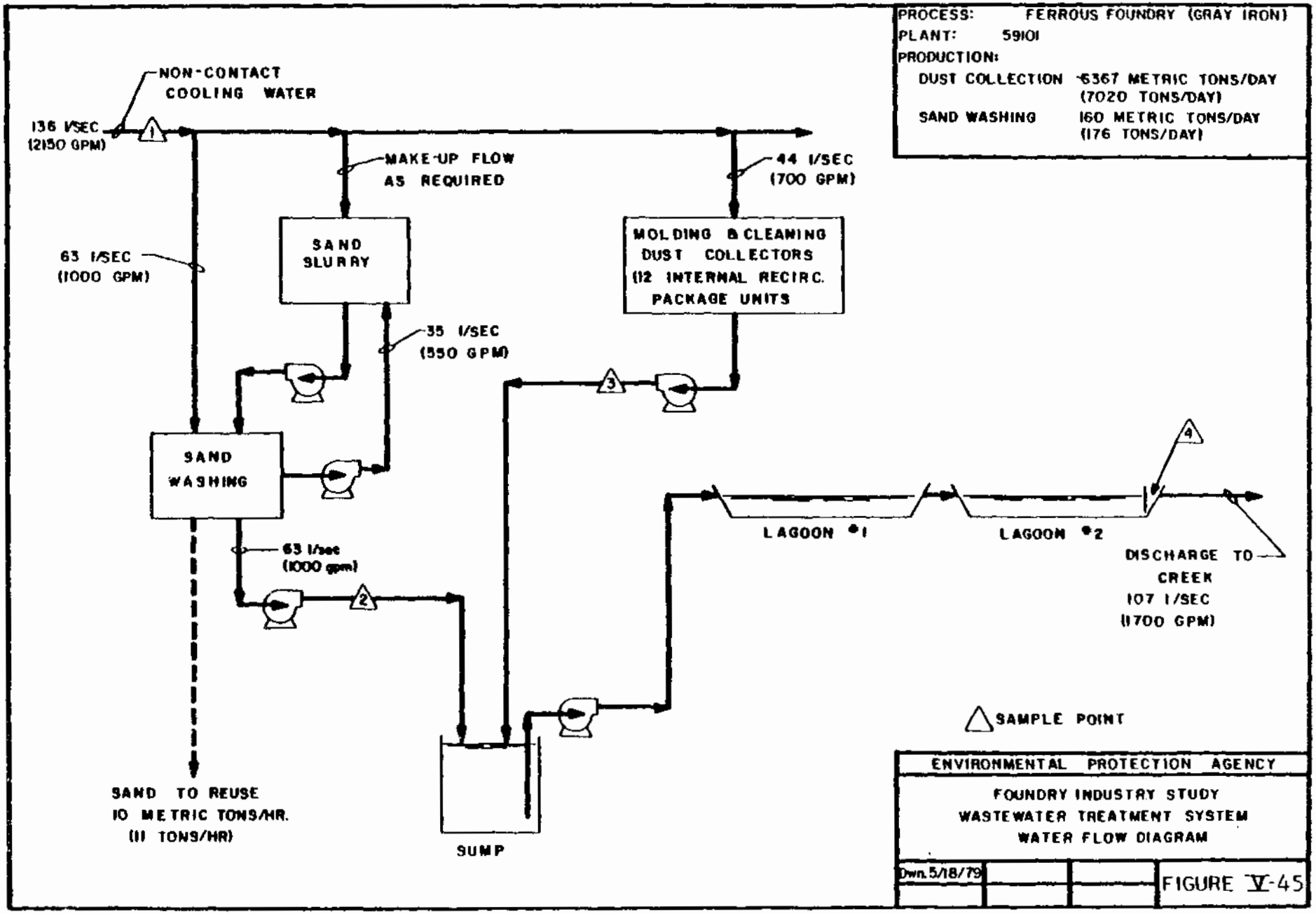
PROCESS: FERROUS FOUNDRY (GRAY IRON)
PLANT: 59101
PRODUCTION:
DUST COLLECTION 6367 METRIC TONS/DAY (7020 TONS/DAY)
SAND WASHING 160 METRIC TONS/DAY (176 TONS/DAY)
NON-CONTACT COOLING WATER
136 l/SEC (2150 GPM)
MAKE-UP FLOW AS REQUIRED
44 l/SEC (700 GPM)
63 l/SEC (1000 GPM)
SAND SLURRY
MOLDING & CLEANING DUST COLLECTORS (12 INTERNAL RECIRC. PACKAGE UNITS
35 l/SEC (550 GPM)
SAND WASHING
63 l/sec (1000 gpm)
LAGOON #1
LAGOON #2
DISCHARGE TO CREEK 107 l/SEC (1700 GPM)
SAND TO REUSE 10 METRIC TONS/HR. (11 TONS/HR)
SUMP
SAMPLE POINT
ENVIRONMENTAL PROTECTION AGENCY
FOUNDRY INDUSTRY STUDY
WASTEWATER TREATMENT SYSTEM
WATER FLOW DIAGRAM
Dwn. 5/18/79
FIGURE V-45

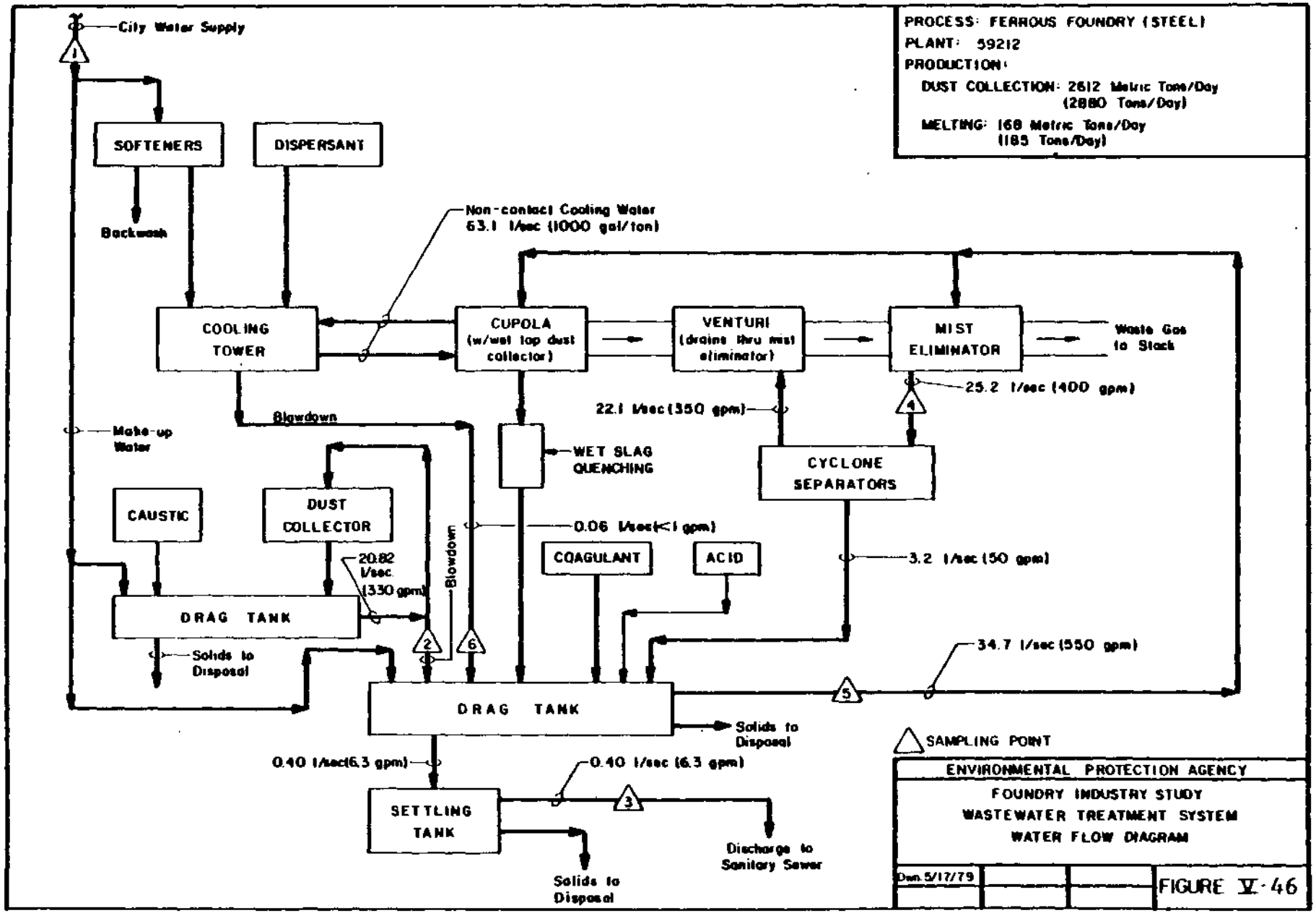
PROCESS: FERROUS FOUNDRY (STEEL)
PLANT: 59212
PRODUCTION:
DUST COLLECTION: 2612 Metric Tons/Day (2880 Tons/Day)
MELTING: 168 Metric Tons/Day (185 Tons/Day)
City Water Supply
SOFTENERS
DISPERSANT
Backwash
Non-contact Cooling Water 63.1 l/sec (1000 gal/ton)
COOLING TOWER
CUPOLA (w/wet top dust collector)
VENTURI (drains thru mist eliminator)
MIST ELIMINATOR
Waste Gas to Stack
25.2 l/sec (400 gpm)
22.1 l/sec (350 gpm)
Blowdown
Make-up Water
WET SLAG QUENCHING
CYCLONE SEPARATORS
CAUSTIC
DUST COLLECTOR
0.06 l/sec (<1 gpm)
COAGULANT
ACID
3.2 l/sec (50 gpm)
20.82 l/sec (330 gpm)
Blowdown
DRAG TANK
Solids to Disposal
34.7 l/sec (550 gpm)
DRAG TANK
Solids to Disposal
SAMPLING POINT
0.40 l/sec (6.3 gpm)
0.40 l/sec (6.3 gpm)
SETTLING TANK
Discharge to Sanitary Sewer
Solids to Disposal
ENVIRONMENTAL PROTECTION AGENCY
FOUNDRY INDUSTRY STUDY
WASTEWATER TREATMENT SYSTEM
WATER FLOW DIAGRAM
Dwn. 5/17/79
FIGURE V-46

SECTION VI

SELECTION OF POLLUTANTS TO BE CONSIDERED FOR REGULATION

Section V presented data from metal molding and casting plant sampling visits and subsequent chemical analyses. This section examines those data and discusses the selection or exclusion of pollutants for potential regulation. Table V-47 lists the 129 priority pollutants considered in this analysis. The conventional pollutants and pollutant parameters considered in this study are oil and grease, total suspended solids (TSS), and pH. The nonconventional pollutants considered are total phenols (4-AAP), aluminum, iron, magnesium, and ammonia.

A brief discussion of each pollutant detected at a quantifiable concentration in the raw wastewater is available in Section 22.58 of the record for this rulemaking. That discussion provides information concerning where the pollutant originates (i.e., whether it is a naturally occurring substance, processed metal, or a manufactured compound); general physical properties and the form of the pollutant; toxic effects of the pollutant in humans and other animals; and behavior of the pollutant in POTW at the concentrations expected in industrial discharges.

RATIONALE FOR POLLUTANT SELECTION

The discussion that follows describes the analysis that was performed to select for or exclude pollutants from further consideration for limitations guidelines and standards. Pollutants were considered for regulation if they are present in the raw wastewater at concentrations treatable by the technologies considered as model technologies in this rulemaking, or if they are believed to be present in the wastewater based on engineering judgement of raw materials and production processes employed.

Pollutants were excluded from further consideration if they were not detected in the raw wastewater, if they were only detected below quantifiable or treatable concentrations, or if they were detected in only a small number of sources. Paragraph 8(a)(iii) of the modified Settlement Agreement provides that the Agency may exclude pollutants from categorical limitations and standards if:

> "3. For a specific pollutant, the pollutant is not detectable (with the use of analytical methods approved pursuant to 304(h)of the Act, or in instances where approved methods do not exist, with the use of analytical methods which represent state-of-the-art capability) in the direct discharges or in the effluents which are introduced into publicly-owned treatment works from sources within the subcategory or category; or is detectable in the effluent from only a small number of sources within the subcategory and the

pollutant is uniquely related to only those sources; or the pollutant is present only in trace amounts and is neither causing nor likely to cause toxic effects; or is present in amounts too small to be effectively reduced by technologies known to the Administrator; or the pollutant will be effectively controlled by the technologies upon which are based other effluent limitations and guidelines, standards of performance, or pretreatment standards."

The final selection of pollutants considered for regulation is presented in Sections IX through XIII, based upon a variety of factors explained there.

The end-of-pipe treatment technologies relied upon to determine treatable levels in this analysis include lime precipitation, settling, and filtration for priority metal pollutants, and include oil skimming, emulsion breaking, settling, and carbon adsorption for organic priority pollutants. These technologies, as well as the classes of pollutants which they control, are discussed in detail in Section VII. The Agency assumed that each priority organic pollutant found in metal molding and casting wastewaters can be treated to a concentration of 0.010 mg/l using carbon adsorption. The Agency determined that each priority pollutant metal found in metal molding and casting wastewaters can be treated to various specific concentrations, all less than 0.3 mg/l, using lime, settle and filter technology. Section VII presents the actual treatment effectiveness concentrations that can be expected for each priority pollutant based upon the various control and treatment technologies considered.

In the analysis of pollutants detected in each subcategory, EPA has defined "detected in a small number of sources" as detected in a ratio of one or fewer samples out of every seven samples analyzed. If less than seven samples were analyzed then it was judged that not enough data were available to consider excluding the pollutant for this reason. The ratio of one in seven was determined to be a small number of sources because it ensures that pollutants excluded by this criteria were found in at most one sample, when daily samples were collected over three days in at least three waste streams.

POLLUTANT SELECTION BY SUBCATEGORY

While the Agency solicited data on the presence and absence of priority pollutants in the data collection portfolio, the selection of priority pollutants for regulatory consideration has not been based on those responses. The Agency found that most of the responses to that solicitation were not definitive: pollutants were "believed" to be absent or present. Rather, the Agency has based the selection of priority pollutants for regulatory consideration on the extensive raw wastewater sampling data base developed under its supervision.

The pollutant selection analysis is performed on a subcategory-by-subcategory basis. For each subcategory, the selection and exclusion of conventional and nonconventional pollutant parameters is discussed first. Following that, the selection and exclusion of priority pollutants is presented. Tables VI-1 through VI-10 present the frequency of occurrence of priority, conventional and nonconventional pollutants during EPA's sampling program. Priority pollutants that do not appear on the frequency of occurrence tables were never detected at quantifiable levels in any of the samples collected at plants within the respective subcategory.

Organic Priority Pollutant Selection by Process Segment

Tables VI-11 through VI-15 present the organic priority pollutants considered for regulation in each process segment of each subcategory. Organic priority pollutants not listed on these tables are not considered for regulation. These tables list all the organic priority pollutants selected for further consideration for limitations in each subcategory (see discussion later in this section).

Pollutants were allocated to each process segment within a subcategory based on their presence in the raw wastewater of that process segment. Where no organics data were available for a particular process segment, but organics were expected to be present based on engineering judgement of the process involved, organics data were transferred to that segment from similar process segments. Details supporting data transfers are presented in Section V. For those segments where data were transferred, pollutants were selected only if they were present in a treatable concentration in the process segment providing the data, and also were selected for further consideration in the subcategory of interest.

These data transfers are listed below:

Transfer of Data

To:	From:
Aluminum Subcategory	
Dust Collection Scrubber	Aluminum Melting Furnace Scrubber
Mold Cooling	Aluminum Casting Quench
Copper Subcategory	
Casting Quench	Copper Mold Cooling
Investment Casting	Copper Direct Chill Casting, Dust Collection Scrubber, and Mold Cooling
Melting Furnace Scrubber	Copper Dust Collection Scrubber
Ferrous Subcategory	
Investment Casting	Aluminum Investment Casting
Mold Cooling	Ferrous Casting Quench
Magnesium Subcategory	
Casting Quench	Aluminum Casting Quench
Dust Collection Scrubber	Magnesium Grinding Scrubber
Zinc Subcategory	
Melting Furnace Scrubber	Ferrous Melting Furnace Scrubber
Mold Cooling	Zinc Casting Quench

Pollutant Selection for the Aluminum Subcategory

Conventional and Nonconventional Pollutant Parameters

Four conventional and nonconventional pollutant parameters were selected for further consideration in this subcategory, and are listed below:

oil and grease
total phenols (4-AAP)
total suspended solids (TSS)
pH.

Total phenols were only selected for further consideration in the die casting, dust collection scrubber, and melting furnace scrubber process segments, because the average concentration of total phenol in these process segments is above treatable levels.

Oil and grease, total phenols, and TSS are selected for further consideration because they were each found in raw wastewater samples in concentrations exceeding those achievable by

identified treatment technologies. Table VI-1 shows the frequency of occurrence of these three parameters, along with the range of pH values observed in this study. In addition, these three pollutant parameters are expected to be present in the raw wastewater based on their presence in the raw materials and production processes employed by the plants in this subcategory. Furthermore, limits on oil and grease, total phenols, and TSS ensure effective removal of priority organic and precipitated metal pollutants because these bulk parameters provide a good indication of overall treatment system performance. Oil and grease, total phenols, and TSS are commonly regulated in existing permits.

The 24 pH values measured in aluminum subcategory wastewater ranged from 5.4 to 8.7. Review of pH data can be an effective means of determining whether a treatment system is operating properly. Effective removal of metal pollutants by chemical treatment requires careful control of pH; the control of pH to within desirable limits is readily achievable in this subcategory. Therefore, pH was selected for further consideration for regulation.

Priority Pollutants

The frequency of occurrence of the priority pollutants for the aluminum subcategory is presented in Table VI-2 at the end of this section. That table is based on data for the raw wastewater from four process segments - casting quench, investment casting, melting furnace scrubber, and die casting. The following discussion is based on information included in Table VI-2.

Priority Pollutants Never Detected or Never Found Above Their Analytical Quantification Concentration

The priority pollutants listed below were not detected or found above their analytical quantification concentration in any wastewater samples from this subcategory, nor is there any reason to expect them to be present in the wastewater based on the Agency's review of raw materials and production processes employed; therefore, they are not considered further for regulation:

2. acrolein
3. acrylonitrile
8. 1,2,4-trichlorobenzene
9. hexachlorobenzene
12. hexachloroethane
14. 1,1,2-trichloroethane
16. chloroethane
17. bis(chloromethyl)ether (deleted)
19. 2-chloroethyl vinyl ether
20. 2-chloronaphthalene
25. 1,2-dichlorobenzene
26. 1,3-dichlorobenzene
56. nitrobenzene
61. N-nitrosodimethylamine
69. di-n-octyl phthalate
74. 3,4-benzofluoranthene
75. benzo(k)fluoranthene
79. benzo(ghi)perylene
82. dibenzo(a,h)anthracene
83. indeno(1,2,3-c,d)pyrene
88. vinyl chloride
89. aldrin
90. dieldrin
91. chlordane
92. 4,4'-DDT

27. 1,4-dichlorobenzene
28. 3,3'-dichlorobenzidine
29. 1,1-dichloroethylene
30. 1,2-trans-dichloroethylene
32. 1,2-dichloropropane
33. 1,3-dichloropropylene
35. 2,4-dinitrotoluene
36. 2,6-dinitrotoluene
37. 1,2-diphenylhydrazine
40. 4-chlorophenyl phenyl ether
41. 4-bromophenyl phenyl ether
42. bis(2-chloroisopropyl) ether
43. bis(2-chloroethoxy) methane
45. methyl chloride
46. methyl bromide
47. bromoform
49. trichlorofluoromethane (deleted)
50. dichlorodifluoromethane (deleted)
51. chlorodibromomethane
52. hexachlorobutadiene
53. hexachlorocyclopentadiene
54. isophorone
93. 4,4'-DDE
94. 4,4'-DDD
95. Alpha-endosulfan
96. Beta-endosulfan
97. endosulfan sulfate
98. endrin
99. endrin aldehyde
100. heptachlor
101. heptachlor epoxide
102. Alpha-BHC
103. Beta-BHC
104. Gamma-BHC
105. Delta-BHC
113. toxaphene
114. antimony
116. asbestos
117. beryllium
118. cadmium
125. selenium
126. silver
127. thallium
129. 2,3,7,8-tetrachlorodibenzo-p-dioxin (TCDD)

Pesticides (pollutants 91-93 and 101-105) were reported as detected in samples of aluminum die casting water. However, EPA is excluding pesticides from regulation in this subcategory because EPA believes the pesticide data were incorrectly interpreted by the analytical laboratory, and, based on our best judgement, EPA has no reason to believe that pesticides should be present in foundry wastewater. Pesticide concentrations were not confirmed by mass spectroscopy or multiple GC column techniques. False positive results can be common when confirmation is not performed. The gas chromatography (GC) spectra and retention time for several pesticides is very similar to those of the PCB's which were detected in aluminum die casting water. EPA believes the spectra for the PCB's, which were present in the water at the time of sampling, created a "false-positive" for the pesticides. Pesticides are not believed to be present in aluminum foundry wastewaters, and are thus excluded from regulation.

Priority Pollutants Present Below Concentrations Achievable by Treatment

The pollutants listed below are not considered further for regulation because they were not found in any wastewater samples from this subcategory above concentrations considered achievable by existing or available treatment technologies or are not believed to be currently present at treatable concentrations:

106.	PCB-1242	112.	PCB-1016
107.	PCB-1254	115.	arsenic
108.	PCB-1221	119.	chromium
109.	PCB-1232	121.	cyanide
110.	PCB-1248	123.	mercury
111.	PCB-1260	124.	nickel

PCB's (pollutants 106 through 112) were detected in some samples of aluminum casting wastewater collected in 1978, predominantly in aluminum die casting wastewater. Eight of 10 die casting samples collected in 1978 contained PCB's. In 1978, PCB's were a common component of hydraulic fluids used in die casting operations. Hydraulic fluid leakage is included in die casting wastewater discharges. However, Section 6(e) of the Toxic Substances Control Act (TSCA) generally prohibits the use of PCB's after January 1, 1978. EPA promulgated a rule, which was published in the Federal Register of May 31, 1979 (44 FR 31514), to implement Sections 6(e)(2) and (3) of TSCA. This rule is listed in the Code of Federal Regulations under 40 CFR Part 761. The use of PCB's in hydraulic systems is governed by 40 CFR 761.30(e). That part requires the annual monitoring and flushing of PCB-bearing hydraulic systems, beginning no later than November 1, 1979, until the concentration of PCB's in the hydraulic system is below 50 ppm. Data available to the Agency indicate that when PCB-bearing oil systems (transformers) are flushed and refilled with non-PCB-bearing oils, PCB concentrations in the system are reduced by over 90 percent. Because PCB's are no longer used in process fluids associated with die casting operations, and because EPA has observed that when the use of PCB's is discontinued, and required flushing takes place, the presence of PCB's is reduced by greater than 90 percent during each occurrence of flushing, PCB's are not expected to be currently present in die casting wastewaters at treatable concentrations.

PCB's were also detected in 1978 at low levels in the melting furnace scrubber wastewater at plant 17089. The make-up water to the scrubber consisted of treated effluent that contained some treated die casting wastewater. The scrubber make-up water contained low levels of PCB's similar to those found in the melting furnace scrubber wastewater. EPA believes the presence of PCB's in the melting furnace scrubber water can be attributed to the die casting operations at plant 17089 and are not related to melting furnace scrubber operations.

PCB's were detected in one waste stream at an aluminum investment casting plant (plant 04704, sample point B). The source of the PCB's in the investment casting process is unconfirmed, although the levels of PCB's detected at plant 04704 may be related to hydraulic fluid leakage from the ram used in the mold back-up station at that facility.

The presence of PCB's in aluminum casting wastewaters sampled in 1978 is attributed to the presence of PCB-bearing hydraulic fluid in wastewater. The use of PCB's in hydraulic fluids has

subsequently been controlled by Section 6(e) of TSCA and the Agency does not expect PCB's to currently be present in aluminum casting wastewaters at treatable concentrations. Therefore, EPA is not considering PCB's for regulation in the aluminum subcategory.

Priority Pollutants Detected in the Effluent From Only a Small Number of Sources

The priority pollutants listed below are not considered further for regulation because they were detected in the effluent from only a small number of sources and they are uniquely related to only those sources. EPA is considering a pollutant detected in the ratio of only one out of seven or more samples as being a "small number of sources." Although national effluent limitations guidelines or standards are not specified for these pollutants, it may be appropriate for the individual permitting authority or municipality to specify limits for these compounds if they are reported on permit applications at levels above treatability. The permit writers will make these determinations on a case-by-case basis.

5. benzidine
6. carbon tetrachloride
10. 1,2-dichloroethane
13. 1,1-dichloroethane
15. 1,1,2,2-tetrachloroethane
18. bis(chloroethyl) ether
24. 2-chlorophenol
31. 2,4-dichlorophenol
38. ethylbenzene
48. dichlorobromomethane
57. 2-nitrophenol
58. 4-nitrophenol
59. 2,4-dinitrophenol
60. 4,6-dinitro-o-cresol
62. N-nitrosodiphenylamine
63. N-nitrosodi-n-propylamine
64. pentachlorophenol
71. dimethyl phthalate
77. acenaphthylene

Priority Pollutants Selected for Further Consideration in Establishing Effluent Limitations Guidelines and Standards

Based on the analyses described above, the pollutants listed below were selected for further consideration for regulation in this subcategory:

1. acenaphthene
4. benzene
7. chlorobenzene
11. 1,1,1-trichloroethane
21. 2,4,6-trichlorophenol
22. para-chloro-meta-cresol
23. chloroform
34. 2,4-dimethylphenol
39. fluoranthene
44. methylene chloride
55. naphthalene
65. phenol
66. bis(2-ethylhexyl) phthalate
67. butyl benzyl phthalate
68. di-n-butyl phthalate
70. diethyl phthalate
72. benzo(a)anthracene
73. benzo(a)pyrene
76. chrysene
78. anthracene
80. fluorene
81. phenanthrene
84. pyrene
85. tetrachloroethylene
86. toluene
87. trichloroethylene
120. copper
122. lead
128. zinc

Pollutant Selection for the Copper Subcategory

Conventional and Nonconventional Pollutant Parameters

Four conventional and nonconventional pollutant parameters were selected for further consideration in this subcategory, and are listed below:

oil and grease
total phenols (4-AAP)
total suspended solids (TSS)
pH

Total phenols were only selected for further consideration in the dust collection scrubber and melting furnace scrubber process segments, because the average concentration of total phenol in these process segments is above treatable levels.

Oil and grease, total phenols, and TSS are selected for further consideration because they were each found in raw wastewater samples in concentrations exceeding those achievable by identified treatment technologies. Table VI-3 shows the frequency of occurrence of these three parameters, along with the range of pH values observed in this study. In addition, these three pollutant parameters are expected to be present in the raw wastewater based on their presence in the raw materials and production processes employed by the plants in this subcategory. Furthermore, limitations on oil and grease, total phenols, and TSS ensure effective removal of priority organic and precipitated metal pollutants because these bulk parameters provide a good indication of overall treatment system performance. Oil and grease, total phenols, and TSS are commonly regulated in existing permits.

The 11 pH values measured in copper subcategory wastewater ranged from 7.0 to 8.4. Review of pH data can be an effective means of determining whether a treatment system is operating properly. Effective removal of metal pollutants by chemical treatment requires careful control of pH; the control of pH to within desirable limits is readily achievable in this subcategory. Therefore, pH was selected for further consideration for regulation.

Priority Pollutants

The frequency of occurrence of the priority pollutants for the copper subcategory is presented in Table VI-4 at the end of this section. That table is based on data for the raw wastewater from three process segments - direct chill casting, mold cooling, and dust collection scrubber. The following discussion is based on information included in Table VI-4.

Priority Pollutants Never Detected or Never Found Above Their Analytical Quantification Concentration

The priority pollutants listed below were not detected or found above their analytical quantification concentration in any wastewater samples from this subcategory, nor is there any reason to expect them to be present in the wastewater based on the Agency's review of raw materials and production processes employed; therefore, they are not considered further for regulation:

2. acrolein
3. acrylonitrile
4. benzene
5. benzidine
7. chlorobenzene
8. 1,2,4-trichlorobenzene
9. hexachlorobenzene
10. 1,2-dichloroethane
12. hexachloroethane
13. 1,1-dichloroethane
15. 1,1,2,2-tetrachloroethane
16. chloroethane
17. bis(chloromethyl) ether (deleted)
18. bis(2-chloroethyl) ether
19. 2-chloroethyl vinyl ether
20. 2-chloronaphthalene
24. 2-chlorophenol
25. 1,2-dichlorobenzene
26. 1,3-dichlorobenzene
27. 1,4-dichlorobenzene
28. 3,3'-dichlorobenzidine
29. 1,1-dichloroethylene
30. 1,2-trans-dichloro-ethylene
31. 2,4-dichlorophenol
32. 1,2-dichloropropane
33. 1,2-dichloropropylene
35. 2,4-dinitrotoluene
37. 1,2-diphenylhydrazine
38. ethylbenzene
39. fluoranthene
40. 4-chlorophenyl phenyl ether
41. 4-bromophenyl phenyl ether
42. bis(2-chloroisopropyl) ether
43. bis(2-chloroethoxy) ether
44. methylene chloride
46. methyl bromide
47. bromoform
48. dichlorobromomethane
49. trichlorofluoromethane (deleted)
53. hexachlorocyclopenta-diene
54. isophorone
56. nitrobenzene
59. 2,4-dinitrophenol
60. 4,6-dinitro-o-cresol
61. N-nitrosodimethylamine
62. N-nitrosodiphenylamine
63. N-nitrosodi-n-propyl-amine
79. benzo(ghi)perylene
80. fluorene
82. dibenzo(a,h)anthracene
83. indeno(1,2,3-c,d)pyrene
86. toluene
88. vinyl chloride
89. aldrin
90. dieldrin
91. chlordane
92. 4,4'-DDT
93. 4,4'-DDE
94. 4,4'-DDD
95. Alpha-endosulfan
96. Beta-endosulfan
97. endosulfan sulfate
98. endrin
99. endrin aldehyde
100. heptachlor
101. heptachlor epoxide
102. Alpha-BHC
103. Beta-BHC
104. Gamma-BHC
105. Delta-BHC
106. PCB-1242
107. PCB-1254
108. PCB-1221
109. PCB-1232
110. PCB-1248
111. PCB-1260
112. PCB-1016
113. toxaphene
114. antimony
116. asbestos
117. beryllium

50. dichlorodifluoro-methane (deleted)
51. chlorodibromomethane
52. hexachlorobutadiene
125. selenium
127. thallium
129. 2,3,7,8-tetrachlorodi-benzo-p-dioxin (TCDD)

Priority Pollutants Present Below Concentrations Achievable by Treatment

The pollutants listed below are not considered further for regulation because they were not found in any wastewater samples from this subcategory above concentrations considered achievable by existing or available treatment technologies:

115. arsenic
121. cyanide
123. mercury
126. silver

Priority Pollutants Detected in the Effluent From Only a Small Number of Sources

The priority pollutants listed below are not considered further for regulation because they were detected in the effluent from only a small number of sources. EPA is considering a pollutant detected in the ratio of only one out of seven or more samples as being a "small number of sources." Although national effluent limitations guidelines or standards are not specified for these pollutants, it may be appropriate for the individual permitting authority or municipality to specify limits for these compounds if they are reported on permit applications at levels above treatability. The permit writers will make these determinations on a case-by-case basis.

6. carbon tetrachloride
11. 1,1,1-trichloroethane
14. 1,1,2-trichloroethane
21. 2,4,6-trichlorophenol
36. 2,6-dinitrotoluene
45. methyl chloride
57. 2-nitrophenol
69. di-n-octyl phthalate
73. benzo(a)pyrene
85. tetrachloroethylene
87. trichloroethylene

Priority Pollutants Selected for Further Consideration in Establishing Effluent Limitations Guidelines and Standards

Based on the analyses described above, the pollutants listed below were selected for further consideration for regulation in this subcategory.

1.	acenaphthene	72.	benzo(a)anthracene
22.	para-chloro-meta-cresol	74.	3,4-benzofluoranthene
23.	chloroform	75.	benzo(k)fluoranthene
34.	2,4-dimethylphenol	76.	chrysene
55.	naphthalene	77.	acenaphthylene
58.	4-nitrophenol	78.	anthracene
64.	pentachlorophenol	81.	phenanthrene
65.	phenol	84.	pyrene
66.	bis(2-ethylhexyl) phthalate	118.	cadmium
		119.	chromium
67.	butyl benzyl phthalate	120.	copper
68.	di-n-butyl phthalate	122.	lead
70.	diethyl phthalate	124.	nickel
71.	dimethyl phthalate	128.	zinc

Pollutant Selection for the Ferrous Subcategory

Conventional and Nonconventional Pollutant Parameters

Four conventional and nonconventional pollutant parameters were selected for further consideration in this subcategory, and are listed below:

oil and grease
total phenols (4-AAP)
total suspended solids (TSS)
pH

Total phenols were only selected for further consideration in the dust collection scrubber, melting furnace scrubber, and wet sand reclamation process segments, because the average concentration of total phenol in these process segments is above treatable levels.

Oil and grease, total phenols, and TSS are selected for further consideration because they were each found in raw wastewater samples in concentrations exceeding those achievable by identified treatment technologies. Table VI-5 shows the frequency of occurrence of these three parameters, along with the range of pH values observed in this study. In addition, these three parameters are expected to be present in the raw wastewater based on their presence in the raw materials and production processes employed by the plants in this subcategory. Furthermore, limits on oil and grease, total phenols, and TSS ensure effective removal of priority organic and precipitated metal pollutants because these bulk parameters provide a good indication of overall treatment system performance. Oil and grease, total phenols, and TSS are commonly regulated in existing permits.

The 18 pH values measured in ferrous subcategory wastewater ranged from 3.7 to 11. Review of pH data can be an effective means of determining whether a treatment system is operating properly. Effective removal of metal pollutants by chemical treatment requires careful control of pH; the control of pH to

within desirable limits is readily achievable in this subcategory. Therefore, pH was selected for further consideration for regulation.

Priority Pollutants

The frequency of occurrence of the priority pollutants for the ferrous subcategory is presented in Table VI-6 at the end of this section. That table is based on data for the raw wastewater from seven process segments - casting cleaning, casting quench, melting furnace scrubber, slag quench, wet sand reclamation, mold cooling, and dust collection scrubber. The following discussion is based on information included in Table VI-6.

Priority Pollutants Never Detected or Never Found Above Their Analytical Quantification Concentration

The priority pollutants listed below were not detected or found above their analytical quantification concentration in any wastewater samples from this subcategory, nor is there any reason to expect them to be present in the wastewater based on the Agency's review of raw materials and production processes employed; therefore, they are not considered further for regulation:

2. acrolein
3. acrylonitrile
5. benzidene
6. carbon tetrachloride
7. chlorobenzene
8. 1,2,4-trichlorobenzene
9. hexachlorobenzene
10. 1,2-dichloroethane
12. hexachloroethane
13. 1,1-dichloroethane
14. 1,1,2-trichloroethane
15. 1,1,2,2-tetrachloroethane
16. chloroethane
17. bis(chloromethyl) ether (deleted)
18. bis(2-chloroethyl) ether
19. 2-chloroethyl vinyl ether
21. 2,4,6-trichlorophenol
25. 1,2-dichlorobenzene
26. 1,3-dichlorobenzene
27. 1,4-dichlorobenzene
28. 3,3'-dichlorobenzidine
29. 1,1-dichloroethylene
32. 1,2-dichloropropane
33. 1,3-dichloropropylene
37. 1,2-diphenylhydrazine
38. ethylbenzene
40. 4-chlorophenyl phenyl ether
41. 4-bromophenyl phenyl ether
48. dichlorobromomethane
49. trichlorofluoromethane (deleted)
50. dichlorodifluoromethane (deleted)
51. chlorodibromomethane
52. hexachlorobutadiene
53. hexachlorocyclopentadiene
61. N-nitrosodimethylamine
63. N-nitrosodi-n-propylamine
73. benzo(a)pyrene
79. benzo(ghi)perylene
82. dibenzo(a,h)anthracene
83. indeno(1,2,3-c,d)pyrene
88. vinyl chloride
89. aldrin
90. dieldrin
91. chlordane
92. 4,4'-DDT
93. 4,4'-DDE
94. 4,4'-DDD
95. Alpha-endosulfan
96. Beta-endosulfan
97. endosulfan sulfate
98. endrin
100. heptachlor
101. heptachlor epoxide
102. Alpha-BHC
103. Beta-BHC
104. Gamma-BHC

42. bis(2-chloroisopropyl ether
45. methyl chloride
46. methyl bromide
47. bromoform
105. Delta-BHC
113. toxaphene
116. asbestos
129. 2,3,7,8-tetrachlorodibenzo-p-dioxin (TCDD)

Priority Pollutants Present Below Concentrations Achievable by Treatment

The pollutants listed below are not considered further for regulation because they were not found in any wastewater samples from this subcategory above concentrations considered achievable by existing or available treatment technologies:

20. 2-chloronaphthalene
115. arsenic
117. beryllium
121. cyanide
123. mercury
126. silver
127. thallium

Priority Pollutants Detected in the Effluent From Only a Small Number of Sources

The priority pollutants listed below are not considered further for regulation because they were detected in the effluent from only a small number of sources and they are uniquely related to only those sources. EPA is considering a pollutant detected in only one out of seven or more samples as being a "small number of sources." Although national effluent limitations guidelines or standards are not specified for these pollutants, it may be appropriate for the individual permitting authority or municipality to specify limits for these compounds if they are reported on permit applications at levels above treatability. The permit writers will make these determinations on a case-by-case basis.

4. benzene
11. 1,1,1-trichloroethane
22. para-chloro-meta-cresol
24. 2-chlorophenol
30. 1,2-trans-dichloroethylene
35. 2,4-dinitrotoluene
36. 2,6-dinitrotoluene
43. bis(2-chloroethoxy) methane
54. isophorone
56. nitrobenzene
57. 2-nitrophenol
58. 4-nitrophenol
59. 2,4-dinitrophenol
60. 4,6-dinitro-o-cresol
62. N-nitrosodiphenylamine
69. di-n-octyl phthalate
74. 3,4-benzofluoranthene
75. benzo(k)fluoranthene
85. tetrachloroethylene
86. toluene
87. trichloroethylene
99. endrin aldehyde
106. PCB-1242
107. PCB-1254
108. PCB-1221
109. PCB-1232
110. PCB-1248
111. PCB-1260
112. PCB-1016

PCB's were found in samples of melting furnace scrubber water collected in 1978 at one ferrous foundry (plant 06956). However, in 1985, additional samples taken at this facility showed PCB's

to no longer be present in the wastewater. The 1978 sampling data showing the presence of PCB's in plant 06956 melting furnace scrubber water was not included in the development of Table VI-6, and was not considered in the selection of pollutants for regulatory consideration, because it was not confirmed by the analysis of samples collected in 1985.

Priority Pollutants Selected for Further Consideration in Establishing Effluent Limitations Guidelines and Standards

Based on the analyses described above, the pollutants listed below were selected for further consideration for regulation in this subcategory.

1.	acenaphthene	72.	benzo(a)anthracene
23.	chloroform	76.	chrysene
31.	2,4-dichlorophenol	77.	acenaphthylene
34.	2,4-dimethylphenol	78.	anthracene
39.	fluoranthene	80.	fluorene
44.	methylene chloride	81.	phenanthrene
55.	naphthalene	84.	pyrene
64.	pentachlorophenol	114.	antimony
65.	phenol	118.	cadmium
66.	bis(2-ethylhexyl) phthalate	119.	chromium
		120.	copper
67.	butyl benzyl phthalate	122.	lead
68.	di-n-octyl phthalate	124.	nickel
70.	diethyl phthalate	125.	selenium
71.	dimethyl phthalate	128.	zinc

Pollutant Selection for the Magnesium Subcategory

Conventional and Nonconventional Pollutant Parameters

Three conventional and nonconventional pollutant parameters were selected for further consideration in this subcategory, and are listed below:

oil and grease
total suspended solids (TSS)
pH

As discussed in Sections IX and X, the magnesium subcategory is excluded from regulation because regulatory options considered for the magnesium subcategory are economically unachievable. Therefore, oil and grease, TSS, and pH are not limited in this subcategory.

Oil and grease and TSS were considered for regulation because they were each found in raw wastewater samples in concentrations exceeding those achievable by identified treatment technologies. Table VI-7 shows the frequency of occurrence of these two parameters observed in this study. In addition, these parameters are expected to be present in the raw wastewater based on their presence in the raw materials and production processes employed

by the plants in this subcategory. Furthermore, limits on oil and grease and TSS ensure effective removal of priority organic and precipitated metal pollutants because these bulk parameters provide a good indication of overall treatment system performance. Oil and grease and TSS are commonly regulated in existing permits.

The pH was not measured in any wastewater sample in this subcategory. However, review of pH data can be an effective means of determining whether a treatment system is operating properly. Effective removal of metal pollutants by chemical treatment requires careful control of pH; the control of pH to within desirable limits is readily achievable in this subcategory. Therefore, pH was considered for regulation in the magnesium subcategory.

Priority Pollutants

The frequency of occurrence of the priority pollutants for the magnesium subcategory is presented in Table VI-8 at the end of this section. That table is based on data for the raw wastewater from one process segment - grinding scrubber. The following discussion is based on information included in Table VI-8.

Priority Pollutants Never Detected or Never Found Above Their Analytical Quantification Concentration

The priority pollutants listed below were not detected or found above their analytical quantification concentration in any wastewater samples from this subcategory, nor is there any reason to expect them to be present in the wastewater based on the Agency's review of raw materials and production processes employed; therefore, they are not considered further for regulation:

1. acenaphthene
2. acrolein
3. acrylonitrile
4. benzene
5. benzidene
6. carbon tetrachloride
7. chlorobenzene
8. 1,2,4-trichlorobenzene
9. hexachlorobenzene
10. 1,2-dichloroethane
11. 1,1,1-trichloroethane
12. hexachloroethane
13. 1,1-dichloroethane
14. 1,1,2-trichloroethane
15. 1,1,2,2-tetrachloroethane
16. chloroethane
17. bis(chloromethyl) ether
18. bis(2-chloroethyl) ether
19. 2-chloroethyl vinyl ether
20. 2-chloronaphthalene
63. N-nitrosodi-n-propylamine
64. pentachlorophenol
65. phenol
67. butyl benzyl phthalate
68. di-n-butyl phthalate
69. di-n-octyl phthalate
70. diethyl phthalate
71. dimethyl phthalate
72. benzo(a)anthracene
73. benzo(a)pyrene
74. 3,4-benzofluoranthene
75. benzo(k)fluoranthene
76. chrysene
77. acenaphthylene
78. anthracene
79. benzo(ghi)perylene
80. fluorene
81. phenanthrene
82. dibenzo(a,h)anthracene
83. indeno(1,2,3-c,d)pyrene

21. 2,4,6-trichlorophenol
22. para-chloro-meta-cresol
23. chloroform
24. 2-chlorophenol
25. 1,2-dichlorobenzene
26. 1,3-dichlorobenzene
27. 1,4-dichlorobenzene
28. 3,3'-dichlorobenzidine
29. 1,1-dichloroethylene
30. 1,2-trans-dichloroethylene
31. 2,4-dichlorophenol
32. 1,2-dichloropropane
33. 1,3-dichloropropylene
34. 2,4-dimethylphenol
35. 2,4-dinitrotoluene
36. 2,6-dinitrotoluene
37. 1,2-diphenylhydrazine
38. ethylbenzene
39. fluoranthene
40. 4-chlorophenol phenyl ether
41. 4-bromophenyl phenyl ether
42. bis(2-chloroisopropyl) ether
43. bis(2-chloroethoxy)methane
45. methyl chloride
46. methyl bromide
47. bromoform
48. dichlorobromomethane
49. trichlorofluoromethane (deleted)
50. dichlorodifluoromethane (deleted)
51. chlorodibromomethane
52. hexachlorobutadiene
53. hexachlorocyclopentadiene
54. isophorone
55. naphthalene
56. nitrobenzene
57. 2-nitrophenol
58. 4-nitrophenol
59. 2,4-dinitrophenol
60. 4,6-dinitro-o-cresol
61. N-nitrosodimethylamine
62. N-nitrosodiphenylamine
84. pyrene
85. tetrachloroethylene
86. toluene
87. trichloroethylene
88. vinyl chloride
89. aldrin
90. dieldrin
91. chlordane
92. 4,4'-DDT
93. 4,4'-DDE
94. 4,4'-DDD
95. Alpha-endosulfan
96. Beta-endosulfan
97. endosulfan sulfate
98. endrin
99. endrin aldehyde
100. heptachlor
101. heptachlor epoxide
102. Alpha-BHC
103. Beta-BHC
104. Gamma-BHC
105. Delta-BHC
106. PCB-1242
107. PCB-1254
108. PCB-1221
109. PCB-1232
110. PCB-1248
111. PCB-1260
112. PCB-1016
113. toxaphene
114. antimony
115. arsenic
116. asbestos
117. beryllium
118. cadmium
119. chromium
120. copper
122. lead
123. mercury
124. nickel
125. selenium
126. silver
127. thallium
129. 2,3,7,8-tetrachlorodibenzo-p-dioxin (TCDD)

Priority Pollutants Present Below Concentrations Achievable by Treatment

The pollutant listed below is not considered further for regulation because it was not found in any wastewater samples from this subcategory above concentrations considered achievable by existing or available treatment technologies:

121. cyanide

Priority Pollutants Selected for Further Consideration in Establishing Effluent Limitations Guidelines and Standards

Based on the analyses described above, the pollutants listed below were selected for further consideration for regulation in this subcategory.

44. methylene chloride
66. bis(2-ethylhexyl) phthalate
128. zinc

Pollutant Selection for the Zinc Subcategory

Conventional and Nonconventional Pollutant Parameters

Four conventional and nonconventional pollutants or pollutant parameters were selected for further consideration in this subcategory, and are listed below:

oil and grease
total phenols (4-AAP)
total suspended solids (TSS)
pH

Total phenols were only selected for further consideration in the die casting and melting furnace scrubber process segments, because the average concentration of total phenol in these process segments is above treatable levels.

Oil and grease, total phenols, and TSS are selected for limitations because they were each found in raw wastewater samples in concentrations exceeding those achievable by identified treatment technologies. Table VI-9 shows the frequency of occurrence of these three parameters, along with the range of pH values observed in this study. In addition, these three pollutant parameters are expected to be present in the raw wastewater based on their presence in the raw materials and production processes employed by the plants in this subcategory. Furthermore, limits on oil and grease, total phenols, and TSS ensure effective removal of priority organic and precipitated metal pollutants because these bulk parameters provide a good indication of overall treatment system performance. Oil and grease, total phenols, and TSS are commonly regulated in existing permits.

The eight pH values measured in zinc subcategory wastewater ranged from 5.7 to 7.5. Review of pH data can be an effective means of determining whether a treatment system is operating properly. Effective removal of metal pollutants by chemical treatment requires careful control of pH; the control of pH to within desirable limits is readily achievable in this subcategory. Therefore, pH was selected for further consideration for regulation.

Priority Pollutants

The frequency of occurrence of the priority pollutants for the zinc subcategory is presented in Table VI-10 at the end of this section. That table is based on data for the raw wastewater from two process segments - casting quench and die casting. The following discussion is based on information included in Table VI-10.

Priority Pollutants Never Detected or Found Above Their Analytical Quantification Concentration

The priority pollutants listed below were not detected or found above their analytical quantification concentration in any wastewater samples from this subcategory nor is there any reason to expect them to be present in the wastewater based on the Agency's review of raw materials and production processes employed; therefore, they are not considered further for regulation.

2. acrolein
3. acrylonitrile
5. benzidene
7. chlorobenzene
8. 1,2,4-trichlorobenzene
9. hexachlorobenzene
10. 1,2-dichloroethane
12. hexachloroethane
13. 1,1-dichloroethane
14. 1,1,2-trichloroethane
15. 1,1,2,2-tetrachloroethane
16. chloroethane
17. bis(chloromethyl) ether
18. bis(2-chloroethyl) ether
19. 2-chloroethyl vinyl ether
20. 2-chloronaphthalene
25. 1,2-dichlorobenzene
26. 1,3-dichlorobenzene
27. 1,4-dichlorobenzene
28. 3,3'-dichlorobenzidine
29. 1,1-dichloroethylene
32. 1,2-dichloropropane
33. 1,3-dichloropropylene
35. 2,4-dinitrotoluene
36. 2,6-dinitrotoluene
37. 1,2-diphenylhydrazine
40. 4-chlorophenol phenyl ether
41. 4-bromophenyl phenyl ether
42. bis(2-chloroisopropyl) ether
43. bis(2-chloroethoxy)methane
45. methyl chloride
46. methyl bromide
47. bromoform
57. 2-nitrophenol
60. 4,6-dinit -o-cresol
61. N-nitrosodimethylamine
62. N-nitrosodiphenylamine
63. N-nitrosodi-n-propylamine
64. pentachlorophenol
71. dimethyl phthalate
73. benzo(a)pyrene
74. 3,4-benzofluoranthene
75. benzo(k)fluoranthene
77. acenaphthylene
79. benzo(ghi)perylene
80. fluorene
82. dibenzo(a,h)anthracene
83. indeno(1,2,3-c,d)pyrene
88. vinyl chloride
89. aldrin
90. dieldrin
91. chlordane
92. 4,4'-DDT
93. 4,4'-DDE
94. 4,4'-DDD
95. Alpha-endosulfan
96. Beta-endosulfan
97. endosulfan sulfate
98. endrin
99. endrin aldehyde
100. heptachlor
101. heptachlor epoxide
102. Alpha-BHC
103. Beta-BHC
104. Gamma-BHC
105. Delta-BHC
113. toxaphene
114. antimony

48. dichlorobromomethane
49. trichlorofluoromethane (deleted)
50. dichlorodifluoromethane (deleted)
51. chlorodibromomethane
52. hexachlorobutadiene
53. hexachlorocyclopentadiene
54. isophorone
56. nitrobenzene
115. arsenic
116. asbestos
117. beryllium
118. cadmium
119. chromium
125. selenium
126. silver
127. thallium
129. 2,3,7,8-tetrachlorodibenzo-p-dioxin (TCDD)

Priority Pollutants Present Below Concentrations Achievable by Treatment

The pollutants listed below are not considered further for regulation because they were not found in any wastewater samples from this subcategory above concentrations considered achievable by existing or available treatment technologies:

106. PCB-1242
107. PCB-1254
108. PCB-1221
109. PCB-1232
110. PCB-1248
111. PCB-1260
112. PCB-1016
121. cyanide
123. mercury
124. nickel

PCB's were detected in one sample of zinc die casting wastewater collected in 1978. In 1978, PCB's were a common component of hydraulic fluids used in die casting operations. Hydraulic fluid leakage is included in die casting wastewater discharges. However, Section 6(e) of TSCA generally prohibits the use of PCB's after January 1, 1978. EPA promulgated a rule, which was published in the Federal Register of May 31, 1979 (44 FR 31514) to implement Sections 6(e)(2) and (3) of TSCA. This rule is listed in the Code of Federal Regulations under 40 CFR Part 716. The use of PCB's in hydraulic systems is governed by 40 CFR 716.30(e). That part requires the annual monitoring and flushing of PCB-bearing hydraulic systems, beginning no later than November 1, 1979, until the concentration of PCB's in the hydraulic system is below 50 ppm. Data available to the Agency indicate that when PCB-bearing oil systems are flushed and refilled with non-PCB-bearing oils, PCB concentrations in the system are reduced by over 90 percent. Because PCB's are no longer used in process fluids associated with die casting operations, and because EPA has observed that when the use of PCB's is discontinued, and required flushing takes place, the presence of PCB's is reduced by greater than 90 percent during each occurrence of flushing, PCB's are not expected to be currently present in die casting wastewaters at treatable concentrations.

Priority Pollutants Detected in the Effluent From Only a Small Number of Sources

The priority pollutants listed below are not considered further for regulation because they were detected in the effluent from

only a small number of sources. EPA is considering a pollutant detected in the ratio of only one out of seven or more samples as being a "small number of sources." Although national effluent limitations guidelines or standards are not specified for these pollutants, it may be appropriate for the individual permitting authority or municipality to specify limits for these compounds if they are reported on permit applications at levels above treatability. The permit writers will make these determinations on a case-by-case basis.

4. benzene
6. carbon tetrachloride
11. 1,1,1-trichloroethane
23. chloroform
30. 1,2-trans-dichloroethylene
38. ethylbenzene
58. 4-nitrophenol
59. 2,4-dinitrophenol
67. butyl benzyl phthalate
69. di-n-octyl phthalate
72. benzo(a)anthracene
76. chrysene
78. anthracene
81. phenanthrene
84. pyrene

Priority Pollutants Selected for Further Consideration in Establishing Effluent Limitations Guidelines and Standards

Based on the analyses described above, the pollutants listed below were selected for further consideration for regulation in this subcategory.

1. acenaphthene
21. 2,4,6-trichlorophenol
22. para-chloro-meta-cresol
24. 2-chlorophenol
31. 2,4-dichlorophenol
34. 2,4-dimethylphenol
39. fluoranthene
44. methylene chloride
55. naphthalene
65. phenol
66. bis(2-ethylhexyl) phthalate
68. di-n-butyl phthalate
70. diethyl phthalate
85. tetrachloroethylene
86. toluene
87. trichloroethylene
120. copper
122. lead
128. zinc

Table VI-1

FREQUENCY OF OCCURRENCE OF CONVENTIONAL AND NONCONVENTIONAL POLLUTANT PARAMETERS IN THE ALUMINUM SUBCATEGORY

Pollutant Parameter	Treatable Concentration (mg/l)	Number of Samples Analyzed	Number of Samples Detected Above Treatable Concentration	Range of Treatable Concentrations
Oil and Grease	5	27	24	9-49,900 mg/l
Total Phenols (4-AAP)	0.20	24	9	1.07-25 mg/l
Total Suspended Solids (TSS)	2.6	27	26	13-3,576 mg/l
pH		24		5.4-8.7 standard units

Table VI-2

FREQUENCY OF OCCURRENCE OF THE PRIORITY POLLUTANTS
ALUMINUM SUBCATEGORY

Pollutant	Treatable Concentration (mg/l)	Number of Samples Analyzed	Not Detected or Only Detected Below Quantification Concentration	Detected Below Treatable Concentration	Detected Above Treatable Concentration
1. acenaphthene	0.01	27	23		4
4. benzene	0.01	27	20	1	6
5. benzidene	0.01	27	26		1
6. carbon tetrachloride	0.01	27	24		3
7. chlorobenzene	0.01	27	23		4
10. 1,2-dichloroethane	0.01	27	25	1	1
11. 1,1,1-trichloroethane	0.01	27	19	1	7
13. 1,1-dichloroethane	0.01	27	26		1
15. 1,1,2,2-tetrachloroethane	0.01	27	25	1	1
18. bis(chloroethyl) ether	0.01	27	26		1
21. 2,4,6-trichlorophenol	0.01	27	16		11
22. para-chloro-meta-cresol	0.01	27	22		5
23. chloroform	0.01	27	7		20
24. 2-chlorophenol	0.01	27	24	1	2
31. 2,4-dichlorophenol	0.01	27	24		3
34. 2,4-dimethylphenol	0.01	27	19	2	6
38. ethylbenzene	0.01	27	26		1
39. fluoranthene	0.01	27	20		7
44. methylene chloride	0.01	27	6	3	18
48. dichlorobromomethane	0.01	27	25		2
55. naphthalene	0.01	27	21	1	5
57. 2-nitrophenol	0.01	27	25		2
58. 4-nitrophenol	0.01	27	26		1
59. 2,4-dinitrophenol	0.01	27	26		1
60. 4,6-dinitro-o-cresol	0.01	27	26		1
62. N-nitrosodiphenylamine	0.01	27	26		1
63. N-nitrosodi-n-propylamine	0.01	27	25		2
64. pentachlorophenol	0.01	27	26		1
65. phenol	0.01	27	14		13
66. bis(2-ethylhexyl) phthalate	0.01	27	0		27
67. butyl benzyl phthalate	0.01	27	21		6
68. di-n-butyl phthalate	0.01	27	16		11
70. diethyl phthalate	0.01	27	20		7
71. dimethyl phthalate	0.01	27	25		2
72. benzo(a)anthracene	0.01	27	23		4
73. benzo(a)pyrene	0.01	27	23	1	3
76. chrysene	0.01	27	21		6
77. acenaphthylene	0.01	27	24		3
78. anthracene	0.01	27	23	2	2
80. fluorene	0.01	27	23		4
81. phenanthrene	0.01	27	23	2	2
84. pyrene	0.01	27	18		9
85. tetrachloroethylene	0.01	27	13	2	12

Table VI-2 (Continued)

FREQUENCY OF OCCURRENCE OF THE PRIORITY POLLUTANTS
ALUMINUM SUBCATEGORY

Pollutant	Treatable Concentration (mg/l)	Number of Samples Analyzed	Not Detected or Only Detected Below Quantification Concentration	Detected Below Treatable Concentration	Detected Above Treatable Concentration
86. toluene	0.01	27	22		5
87. trichloroethylene	0.01	27	14		13
106. PCB-1242	0.01	21	9		12
107. PCB-1254	0.01	21	9		12
108. PCB-1221	0.01	21	9		12
109. PCB-1232	0.01	21	8		13
110. PCB-1248	0.01	21	8		13
111. PCB-1260	0.01	21	8		13
112. PCB-1016	0.01	21	8		13
115. arsenic	0.34	1		1	
119. chromium	0.07	3	1	2	
120. copper	0.17	21	3	7	11
122. lead	0.15	21	9	2	10
123. mercury	0.036	3		3	
124. nickel	0.22	18	15	3	
128. zinc	0.18	27	3	7	17

Table VI-3

FREQUENCY OF OCCURRENCE OF CONVENTIONAL AND NONCONVENTIONAL POLLUTANT PARAMETERS IN THE COPPER SUBCATEGORY

Pollutant Parameter	Treatable Concentration (mg/l)	Number of Samples Analyzed	Number of Samples Detected Above Treatable Concentration	Range of Treatable Concentrations
Oil and Grease	5	14	9	9-110 mg/l
Total Phenols (4-AAP)	0.20	11	6	1.68-3.27 mg/l
Total Suspended Solids (TSS)	2.6	14	14	16-35,000 mg/l
pH		11		7.0-8.4 standard units

Table VI-4

FREQUENCY OF OCCURRENCE OF THE PRIORITY POLLUTANTS
COPPER SUBCATEGORY

Pollutant	Treatable Concentration (mg/l)	Number of Samples Analyzed	Not Detected or Only Detected Below Quantification Concentration	Detected Below Treatable Concentration	Detected Above Treatable Concentration
1. acenaphthene	0.01	11	9		2
6. carbon tetrachloride	0.01	11	10		1
11. 1,1,1-trichloroethane	0.01	11	10		1
14. 1,1,2-trichloroethane	0.01	11	10		1
21. 2,4,6-trichlorophenol	0.01	11	10		1
22. para-chloro-meta-cresol	0.01	11	9	1	1
23. chloroform	0.01	11	9		2
34. 2,4-dimethylphenol	0.01	11	8		3
36. 2,6-dinitrotoluene	0.01	11	10		1
45. methyl chloride	0.01	11	10		1
55. naphthalene	0.01	11	9		2
57. 2-nitrophenol	0.01	11	10		1
58. 4-nitrophenol	0.01	11	9		2
64. pentachlorophenol	0.01	11	7	1	3
65. phenol	0.01	11	6		5
66. bis(2-ethylhexyl) phthalate	0.01	11	1	1	9
67. butyl benzyl phthalate	0.01	11	6	1	4
68. di-n-butyl phthalate	0.01	11	6		5
69. di-n-octyl phthalate	0.01	11	10		1
70. diethyl phthalate	0.01	11	9		2
71. dimethyl phthalate	0.01	11	8		3
72. benzo(a)anthracene	0.01	11	9		2
73. benzo(a)pyrene	0.01	11	10		1
74. 3,4-benzofluoranthene	0.01	11	9	1	1
75. benzo(k)fluoranthene	0.01	11	9	1	1
76. chrysene	0.01	11	7		4
77. acenaphthylene	0.01	11	9		2
78. anthracene	0.01	11	6		5
81. phenanthrene	0.01	11	6		5
84. pyrene	0.01	11	6		5
85. tetrachloroethylene	0.01	11	10		1
87. trichloroethylene	0.01	11	10		1
115. arsenic	0.34	4		4	
118. cadmium	0.049	11	3	2	6
119. chromium	0.07	8	3	4	1
120. copper	0.17	11			11
122. lead	0.15	14		4	10
123. mercury	0.036	2		2	
124. nickel	0.22	8		3	5
126. silver	0.07	4		4	
128. zinc	0.18	14			14

Table VI-5

FREQUENCY OF OCCURRENCE OF CONVENTIONAL AND NONCONVENTIONAL POLLUTANT PARAMETERS IN THE FERROUS SUBCATEGORY

Pollutant Parameter	Treatable Concentration (mg/l)	Number of Samples Analyzed	Number of Samples Detected Above Treatable Concentration	Range of Treatable Concentrations
Oil and Grease	5	83	46	5.5-55 mg/l
Total Phenols (4-AAP)	0.20	105	59	0.24-59.5 mg/l
Total Suspended Solids (TSS)	2.6	119	119	10-28,010 mg/l
pH		18		3.7-11 standard units

Table VI-6

FREQUENCY OF OCCURRENCE OF THE PRIORITY POLLUTANTS FERROUS SUBCATEGORY

Pollutant	Treatable Concentration (mg/l)	Number of Samples Analyzed	Not Detected or Only Detected Below Quantification Concentration	Detected Below Treatable Concentration	Detected Above Treatable Concentration
1. acenaphthene	0.01	50	36	1	13
4. benzene	0.01	50	47	1	2
11. 1,1,1-trichloroethane	0.01	50	46		4
20. 2-chloronaphthalene	0.01	50	49	1	
22. para-chloro-meta-cresol	0.01	50	47		3
23. chloroform	0.01	50	33	2	15
24. 2-chlorophenol	0.01	50	47		3
30. 1,2-trans-dichloroethylene	0.01	50	49		1
31. 2,4-dichlorophenol	0.01	50	34		16
34. 2,4-dimethylphenol	0.01	50	22		28
35. 2,4-dinitrotoluene	0.01	50	48		2
36. 2,6-dinitrotoluene	0.01	50	48		2
39. fluoranthene	0.01	50	26		24
43. bis(2-chloroethoxy) methane	0.01	50	48		2
44. methylene chloride	0.01	50	27		23
54. isophorone	0.01	50	46		4
55. naphthalene	0.01	50	33	1	16
56. nitrobenzene	0.01	50	48		2
57. 2-nitrophenol	0.01	50	46		4
58. 4-nitrophenol	0.01	50	48		2
59. 2,4-dinitrophenol	0.01	50	49		1
60. 4,6-dinitro-o-cresol	0.01	50	49		1
62. N-nitrosodiphenylamine	0.01	50	45		5
64. pentachlorophenol	0.01	50	31		19
65. phenol	0.01	50	17	1	32
66. bis(2-ethylhexyl) phthalate	0.01	50	16		34
67. butyl benzyl phthalate	0.01	50	38		12
68. di-n-butyl phthalate	0.01	50	23		27
69. di-n-octyl phthalate	0.01	50	48		2
70. diethyl phthalate	0.01	50	29		21
71. dimethyl phthalate	0.01	50	20	1	29
72. benzo(a)anthracene	0.01	50	42		8
74. 3,4-benzofluoranthene	0.01	50	49		1
75. benzo(k)fluoranthene	0.01	50	49		1
76. chrysene	0.01	50	34	2	14
77. acenaphthylene	0.01	50	38	2	10
78. anthracene	0.01	50	22	4	24

Table VI-6 (Continued)

FREQUENCY OF OCCURRENCE OF THE PRIORITY POLLUTANTS
FERROUS SUBCATEGORY

Pollutant	Treatable Concentration (mg/l)	Number of Samples Analyzed	Not Detected or Only Detected Below Quantification Concentration	Detected Below Treatable Concentration	Detected Above Treatable Concentration
80. fluorene	0.01	50	36	1	13
81. phenanthrene	0.01	50	22	4	24
84. pyrene	0.01	50	24		26
85. tetrachloroethylene	0.01	50	44		6
86. toluene	0.01	50	49		1
87. trichloroethylene	0.01	50	45		5
99. endrin aldehyde	0.01	28	27		1
106. PCB-1242	0.01	25	24		1
107. PCB-1254	0.01	25	24		1
108. PCB-1221	0.01	25	24		1
109. PCB-1232	0.01	25	24		1
110. PCB-1248	0.01	25	24		1
111. PCB-1260	0.01	25	24		1
112. PCB-1016	0.01	25	24		1
114. antimony	0.47	60	37	17	6
115. arsenic	0.34	63	27	36	
117. beryllium	0.20	55	46	9	
118. cadmium	0.049	22	6	4	12
119. chromium	0.07	67	17	20	30
120. copper	0.07	89	7	13	69
122. lead	0.15	99	16	20	63
123. mercury	0.036	42	13	29	
124. nickel	0.22	94	25	58	11
125. selenium	0.20	12		9	3
126. silver	0.07	16	6	10	
127. thallium	0.34	2		2	
128. zinc	0.26	104	3	23	78

Table VI-7

FREQUENCY OF OCCURRENCE OF CONVENTIONAL AND NONCONVENTIONAL POLLUTANT PARAMETERS IN THE MAGNESIUM SUBCATEGORY

Pollutant Parameter	Treatable Concentration (mg/l)	Number of Samples Analyzed	Number of Samples Detected Above Treatable Concentration	Range of Treatable Concentrations
Oil and Grease	5	3	1	11 mg/l
Total Suspended Solids (TSS)	2.6	3	3	10-63 mg/l
pH		0		

Table VI-8

FREQUENCY OF OCCURRENCE OF THE PRIORITY POLLUTANTS
MAGNESIUM SUBCATEGORY

Pollutant	Treatable Concentration (mg/l)	Number of Samples Analyzed	Not Detected or Only Detected Below Quantification Concentration	Detected Below Treatable Concentration	Detected Above Treatable Concentration
44. methylene chloride	0.01	3	1		2
66. bis(2-ethylhexyl) phthalate	0.01	3	1		2
128. zinc	0.18	3			3

Table VI-9

FREQUENCY OF OCCURRENCE OF CONVENTIONAL AND NONCONVENTIONAL POLLUTANT PARAMETERS IN THE ZINC SUBCATEGORY

Pollutant Parameter	Treatable Concentration (mg/l)	Number of Samples Analyzed	Number of Samples Detected Above Treatable Concentration	Range of Treatable Concentrations
Oil and Grease	5	8	8	19-17,100 mg/l
Total Phenols (4-AAP)	0.20	8	2	0.266-1.42 mg/l
Total Suspended Solids (TSS)	2.6	8	8	8-3,800 mg/l
pH		8		5.7-7.5 standard units

Table VI-10

FREQUENCY OF OCCURRENCE OF THE PRIORITY POLLUTANTS
ZINC SUBCATEGORY

Pollutant	Treatable Concentration (mg/l)	Number of Samples Analyzed	Not Detected or Only Detected Below Quantification Concentration	Detected Below Treatable Concentration	Detected Above Treatable Concentration
1. acenaphthene	0.01	8	6	1	1
4. benzene	0.01	8	7		1
6. carbon tetrachloride	0.01	8	7		1
11. 1,1,1-trichloroethane	0.01	8	7		1
21. 2,4,6-trichlorophenol	0.01	8	4		4
22. para-chloro-meta-cresol	0.01	8	4		4
23. chloroform	0.01	8	7		1
24. 2-chlorophenol	0.01	8	6		2
30. 1,2-trans-dichloroethylene	0.01	8	7		1
31. 2,4-dichlorophenol	0.01	8	4	2	2
34. 2,4-dimethylphenol	0.01	8	4		4
38. ethylbenzene	0.01	8	7		1
39. fluoranthene	0.01	8	5		3
44. methylene chloride	0.01	8	5	1	2
55. naphthalene	0.01	8	6		2
58. 4-nitrophenol	0.01	8	7		1
59. 2,4-dinitrophenol	0.01	8	7		1
65. phenol	0.01	8	3		5
66. bis(2-ethylhexyl) phthalate	0.01	8	0		8
67. butyl benzyl phthalate	0.01	8	7		1
68. di-n-butyl phthalate	0.01	8	3		5
69. di-n-octyl phthalate	0.01	8	7		1
70. diethyl phthalate	0.01	8	4	1	3
72. benzo(a)anthracene	0.01	8	7		1
76. chrysene	0.01	8	7		1
78. anthracene	0.01	8	7		1
81. phenanthrene	0.01	8	7		1
84. pyrene	0.01	8	7		1
85. tetrachloroethylene	0.01	8	3		5
86. toluene	0.01	8	6		2
87. trichloroethylene	0.01	8	6		2
106. PCB-1242	0.01	4	3		1
107. PCB-1254	0.01	4	3		1
108. PCB-1221	0.01	4	3		1
109. PCB-1232	0.01	4	3		1
110. PCB-1248	0.01	4	3		1
111. PCB-1260	0.01	4	3		1
112. PCB-1016	0.01	4	3		1
120. copper	0.17	6		5	1
122. lead	0.15	4		1	3
123. mercury	0.036	1		1	
124. nickel	0.22	3		3	
128. zinc	0.18	8			8

Table VI-11

ORGANIC PRIORITY POLLUTANTS CONSIDERED FOR REGULATION IN EACH PROCESS SEGMENT ALUMINUM SUBCATEGORY

Pollutant	Casting Cleaning	Casting Quench	Die Casting	Dust Collection Scrubber	Grinding Scrubber	[illegible] Casting	Melting Furnace Scrubber	Mold Cooling
1. acenaphthene			X	X			X	
4. benzene		X	X					X
7. chlorobenzene			X					
11. 1,1,1-trichloroethane			X			X		
21. 2,4,6-trichlorophenol		X	X	X			X	X
22. para-chloro-meta-cresol		X	X					X
23. chloroform		X	X	X		X	X	X
34. 2,4-dimethylphenol		X	X	X			X	X
39. fluoranthene		X	X	X			X	X
44. methylene chloride		X	X	X		X	X	X
55. naphthalene			X					
65. phenol		X	X	X			X	X
66. bis(2-ethylhexyl) phthalate		X	X	X		X	X	X
67. butyl benzyl phthalate		X	X					X
68. di-n-butyl phthalate			X	X			X	
70. diethyl phthalate			X	X			X	
72. benzo(a)anthracene			X					
73. benzo(a)pyrene			X	X			X	
76. chrysene			X					
78. anthracene			X					
80. fluorene			X					
81. phenanthrene			X					
84. pyrene		X	X	X		X	X	X
85. tetrachloroethylene		X	X			X		X
86. toluene			X					
87. trichloroethylene		X	X			X		X

Table VI-12

ORGANIC PRIORITY POLLUTANTS CONSIDERED FOR REGULATION IN EACH PROCESS SEGMENT
COPPER SUBCATEGORY

Pollutant	Casting Quench	Direct Chill Casting	Dust Collection Scrubber	Grinding Scrubber	Investment Casting	Melting Furnace Scrubber	Mold Cooling
1. acenaphthene			X		X	X	
22. para-chloro-mets-cresol			X		X	X	
23. chloroform	X		X		X	X	X
34. 2,4-dimethylphenol			X		X	X	
55. naphthalene			X		X	X	
58. 4-nitrophenol			X		X	X	
64. pentachlorophenol	X		X		X	X	X
65. phenol			X		X	X	
66. bis(2-ethylhexyl) phthalate	X		X		X	X	X
67. butyl benzyl phthalate			X		X	X	
68. di-n-butyl phthalate			X		X	X	
70. diethyl phthalate			X		X	X	
71. dimethyl phthalate	X		X		X	X	X
72. benzo(a)anthracene			X		X	X	
74. 3,4-benzofluoranthene			X		X	X	
75. benzo(k)fluoranthene			X		X	X	
76. chrysene			X		X	X	
77. acenaphthylene			X		X	X	
78. anthracene			X		X	X	
81. phenanthrene			X		X	X	
84. pyrene			X		X	X	

Table VI-13

ORGANIC PRIORITY POLLUTANTS CONSIDERED FOR REGULATION IN EACH PROCESS SEGMENT FERROUS SUBCATEGORY

Pollutant	Casting Cleaning	Casting Quench	Dust Collection Scrubber	Grinding Scrubber	Investment Casting	Melting Furnace Scrubber	Mold Cooling	Slag Quench	Wet Sand Reclamation
1. acenaphthene			X						X
23. chloroform		X	X		X	X	X		
31. 2,4-dichloro-phenol			X			X			
34. 2,4-dimethyl-phenol		X	X			X	X	X	X
39. fluoranthene			X			X			X
44. methylene chloride			X		X	X			X
55. naphthalene			X			X			X
64. pentachloro-phenol			X						
65. phenol			X			X			X
66. bis(2-ethyl-hexyl) phthalate			X		X	X			X
67. butyl benzyl phthalate			X			X			
68. di-n-butyl phthalate			X			X			X
70. diethyl phthalate			X						X
71. dimethyl phthalate			X					X	X
72. benzo(a)anthracene			X			X			X
76. chrysene			X			X			
77. acenaphthylene			X		X	X			X
78. anthracene			X			X			
80. fluorene			X			X			
81. phenanthrene			X			X			
84. pyrene			X		X	X			X

Table VI-1

ORGANIC PRIORITY POLLUTANTS CONSIDERED FOR REGULATION IN EACH PROCESS SEGMENT
MAGNESIUM SUBCATEGORY

Pollutant	Casting Quench	Dust Collection Scrubber	Grinding Scrubber
44. methylene chloride	X	X	X
66. bis(2-ethylhexyl) phthalate	X	X	X

Table VI-15

ORGANIC PRIORITY POLLUTANTS CONSIDERED FOR REGULATION IN EACH PROCESS SEGMENT
ZINC SUBCATEGORY

Pollutant	Casting Quench	Die Casting	Melting Furnace Scrubber	Mold Cooling
1. acenaphthene		X		
21. 2,4,6-trichlorophenol	X	X		X
22. para-chloro-meta-cresol	X	X		X
24. 2-chlorophenol		X		
31. 2,4-dichlorophenol	X		X	X
34. 2,4-dimethylphenol	X	X	X	X
39. fluoranthene	X		X	X
44. methylene chloride	X	X	X	X
55. naphthalene		X	X	
65. phenol	X	X	X	X
66. bis(2-ethylhexyl) phthalate	X	X	X	X
68. di-n-butyl phthalate	X	X	X	X
70. diethyl phthalate	X	X		X
85. tetrachloroethylene	X	X	X	X
86. toluene		X	X	
87. trichloroethylene		X	X	

SECTION VII

CONTROL AND TREATMENT TECHNOLOGY

INTRODUCTION

This section describes the treatment techniques currently used or available to remove or recover wastewater pollutants normally generated by the metal molding and casting industrial point source category (also referred to as foundries). Included are discussions of individual end-of-pipe treatment technologies and in-plant technologies. These treatment technologies are widely used in many industrial categories, and data and information to support their effectiveness has been drawn from a similarly wide range of sources and data bases.

Section VII discusses the treatment effectiveness concentrations that can be expected with the application of these technologies. Also discussed in Section VII are the options considered for the BPT and BAT treatment trains for the metal molding and casting industry.

END-OF-PIPE TREATMENT TECHNOLOGIES

Individual recovery and treatment technologies are described which are used or are suitable for use in treating wastewater discharges from metal molding and casting plants. Each description includes a functional description and discussion of applications, advantages and limitations, operational factors (reliability, maintainability, solid waste aspects), and demonstration status. The treatment processes described include both technologies presently demonstrated within the category, and technologies demonstrated in treatment of similar wastes in other industries.

Metal molding and casting wastewaters characteristically tend toward neutral pH; may contain substantial levels of TSS and dissolved or particulate metals including copper, lead, and zinc; may contain substantial levels of toxic organic pollutants and total phenol (4-AAP); and are generally free from strong chelating agents. Oils and emulsions are also present in waste streams emanating from several metal molding and casting operations.

In general, these pollutants can be removed by oil removal (skimming and emulsion breaking), permanganate oxidation, chemical precipitation and sedimentation, which may be followed by filtration. Most metals may be removed effectively by precipitation as metal hydroxides or carbonates utilizing the reaction with lime, sodium hydroxide, or sodium carbonate. Most organics, including phenol, can be removed effectively by oil removal in conjunction with chemical precipitation and sedimentation. Permanganate oxidation also can be employed to

reduce effectively phenol and toxic organic concentrations.

Discussion of end-of-pipe treatment technologies is divided into two parts: the major technologies; and minor end-of-pipe technologies.

MAJOR TECHNOLOGIES

Later in this section, the development of treatment systems (options) is discussed. The individual technologies used in the systems are described here. The major end-of-pipe technologies for treating metal molding and casting wastewaters are:

1. Carbon adsorption,
2. Chemical precipitation,
3. Emulsion breaking,
4. Granular bed filtration,
5. Oxidation by potassium permanganate,
6. Pressure filtration,
7. Settling,
8. Skimming, and
9. Vacuum filtration.

In practice, precipitation of metals and settling of the resulting precipitates is often a unified two-step operation. Suspended solids originally present in raw wastewaters are not appreciably affected by the precipitation operation and are removed with the precipitated metals in the settling operations. Settling operations can be evaluated independently of hydroxide or other chemical precipitation operations, but hydroxide and other chemical precipitation operations can only be evaluated in combination with a solids removal operation.

The demonstration status of several of the major treatment technologies is presented in Table VII-1. This table indicates for each technology the number plants in the metal molding and casting data base that reported the use of that technology in their DCP.

1. Carbon Adsorption

The use of activated carbon to remove dissolved organics from water and wastewater is a long demonstrated technology. It is one of the most efficient organic removal processes available. This sorption process is reversible, allowing activated carbon to be regenerated for reuse by the application of heat and steam or solvent. Activated carbon has also proved to be an effective adsorbent for many toxic metals, including mercury. Regeneration of carbon which has adsorbed significant amounts of metals, however, may be difficult.

The term activated carbon applies to any amorphous form of carbon that has been specially treated to give high adsorption capacities. Typical raw materials include coal, wood, coconut shells, petroleum base residues, and char from sewage sludge

pyrolysis. A carefully controlled process of dehydration, carbonization, and oxidation yields a product which is called activated carbon. This material has a high capacity for adsorption due primarily to the large surface area available for adsorption, resulting from a large number of internal pores. Pore sizes generally range from 10 to 100 angstroms in radius.

Activated carbon removes contaminants from water by the process of adsorption, or the attraction and accumulation of one substance on the surface of another. Activated carbon preferentially adsorbs organic compounds and, because of this selectivity, is particularly effective in removing organic compounds from aqueous solution.

Carbon adsorption requires pretreatment to remove excess suspended solids, oils, and greases. Suspended solids in the influent should be less than 50 mg/l to minimize backwash requirements; a downflow carbon bed can handle much higher levels (up to 2,000 mg/l) but requires frequent backwashing. Backwashing more than two or three times a day is not desirable; at 50 mg/l suspended solids, one backwash will suffice. Oil and grease should be less than about 10 mg/l. A high level of dissolved inorganic material in the influent may cause problems with thermal carbon reactivation (i.e., scaling and loss of activity) unless appropriate preventive steps are taken. Such steps might include pH control, softening, or the use of an acid wash on the carbon prior to reactivation.

Activated carbon is available in both powdered and granular form. An adsorption column packed with granular activated carbon is shown in Figure VII-1. Powdered carbon is less expensive per unit weight and may have slightly higher adsorption capacity, but it is more difficult to handle and to regenerate.

Application. Isotherm tests have indicated that activated carbon is very effective in adsorbing 65 percent of the organic priority pollutants and is reasonably effective for another 22 percent. Specifically, for the organics of particular interest, activated carbon was very effective in removing 2,4-dimethylphenol, fluoranthene, isophorone, naphthalene, all phthalates, and phenanthrene. It was reasonably effective on 1,1,1-trichloroethane, 1,1-dichloroethane, phenol, and toluene. Table VII-2 summarizes classes of organic compounds together with examples of organics that are readily adsorbed on carbon.

Advantages and Limitations. The major benefits of carbon treatment include applicability to a wide variety of organics and high removal efficiency. Inorganics such as cyanide, chromium, and mercury are also removed effectively. Variations in concentration and flow rate are tolerated well. The system is compact, and recovery of adsorbed materials is sometimes practical. However, destruction of adsorbed compounds often occurs during thermal regeneration. If carbon cannot be thermally desorbed, it must be disposed of along with any adsorbed pollutants. The capital and operating costs of thermal

regeneration are relatively high. Cost surveys show that thermal regeneration is generally economical when carbon use exceeds about 1,000 lbs/day. Carbon cannot remove low molecular weight or highly soluble organics. It also has a low tolerance for suspended solids, which must be removed to at least 50 mg/l in the influent water.

Operational Factors. Reliability: This system should be very reliable with upstream protection and proper operation and maintenance procedures.

Maintainability: This system requires periodic regeneration or replacement of spent carbon and is dependent upon raw waste load and process efficiency.

Solid Waste Aspects: Solid waste from this process is contaminated activated carbon that requires disposal. Carbon which undergoes regeneration reduces the solid waste problem by reducing the frequency of carbon replacement.

Demonstration Status. Three metal molding and casting plants in the metal molding and casting data base employ carbon adsorption in wastewater treatment. Carbon adsorption systems have been demonstrated to be practical and economical in reducing COD, BOD, and related parameters in secondary municipal and industrial wastewaters; in removing toxic or refractory organics from isolated industrial wastewaters; in removing and recovering certain organics from wastewaters; and in removing and some times recovering selected inorganic chemicals from aqueous wastes. Carbon adsorption is a viable and economic process for organic waste streams containing up to 1 to 5 percent of refractory or toxic organics. Its applicability for removal of inorganics such as metals also has been demonstrated.

2. Chemical Precipitation

Dissolved toxic metal ions and certain anions may be chemically precipitated for removal by physical means such as sedimentation, filtration, or centrifugation. Several reagents are commonly used to effect this precipitation:

(1) Alkaline compounds such as lime or sodium hydroxide may be used to precipitate many toxic metal ions as metal hydroxides. Lime also may precipitate phosphates as insoluble calcium phosphate, fluorides as calcium fluoride, and arsenic as calcium arsenate.

(2) Both "soluble" sulfides such as hydrogen sulfide or sodium sulfide and "insoluble" sulfides such as ferrous sulfide may be used to precipitate many heavy metal ions as metal sulfides.

(3) Ferrous sulfate, zinc sulfate or both (as is required) may be used to precipitate cyanide as a ferro or zinc ferricyanide complex.

(4) Carbonate precipitates may be used to remove metals either by direct precipitation using a carbonate reagent such as calcium carbonate or by converting hydroxides into carbonates using carbon dioxide.

These treatment chemicals may be added to a flash mixer or rapid mix tank, to a presettling tank, or directly to a clarifier or other settling device. Because metal hydroxides tend to be colloidal in nature, coagulating agents may also be added to facilitate settling. After the solids have been removed, final pH adjustment may be required to reduce the high pH created by the alkaline treatment chemicals.

Chemical precipitation as a mechanism for removing metals from wastewater is a complex process of at least two steps - precipitation of the unwanted metals and removal of the precipitate. Some very small amount of metal will remain dissolved in the wastewater after complete precipitation. The amount of residual dissolved metal depends on the treatment chemicals used and related factors. The effectiveness of this method of removing any specific metal depends on the fraction of the specific metal in the raw waste (and hence in the precipitate) and the effectiveness of suspended solids removal. In specific instances, a sacrificial ion such as iron or aluminum may be added to aid in the removal of toxic metals by coprecipitation process and reduce the fraction of a specific metal in the precipitate.

Application. Chemical precipitation can be used to remove metal ions such as aluminum, antimony, arsenic, beryllium, cadmium, chromium, copper, iron, lead, manganese, mercury, nickel, selenium, silver, and zinc. The process is also applicable to any substance that can be transformed into an insoluble form such as fluorides, phosphates, soaps, sulfides, and others. Because it is simple and effective, chemical precipitation is extensively used for industrial waste treatment.

The performance of chemical precipitation depends on several variables. The more important factors affecting precipitation effectiveness are:

1. Maintenance of an appropriate (usually alkaline) pH throughout the precipitation reaction and subsequent settling; irrespective of the solids removal technology employed, proper control if pH is absolutely essential for favorable performance of precipitation-sedimentation technologies;

2. Addition of a sufficient excess of treatment ions to drive the precipitation reaction to completion;

3. Addition of an adequate supply of sacrificial ions (such as iron or aluminum) to ensure precipitation and removal of specific target ions; and

4. Effective removal of precipitated solids (see appropriate solids removal technologies).

Sulfide precipitation is sometimes used to precipitate metals resulting in improved metals removals. Most metal sulfides are less soluble than hydroxides, and the precipitates are frequently more dependably removed from water. Solubilities for selected metal hydroxide, carbonate and sulfide precipitates are shown in Table VII-3. (Source: Lange's Handbook of Chemistry). Sulfide precipitation is particularly effective in removing specific metals such as silver and mercury.

Carbonate precipitation is sometimes used to precipitate metals, especially where precipitated metals values are to be recovered. The solubility of most metal carbonates is intermediate between hydroxide and sulfide solubilities; in addition, carbonates form easily filtered precipitates.

Carbonate ions appear to be particularly useful in precipitating lead and antimony. Sodium carbonate has been observed being added at treatment to improve lead precipitation and removal in some industrial plants. The lead hydroxide and lead carbonate solubility curves displayed in Figure VII-2 ("Heavy Metals Removal," by Kenneth Lanouette, Chemical Engineering/Deskbook Issue, October 17, 1977) explain this phenomenon.

Coprecipitation With Iron. The presence of substantial quantities of iron in metal bearing wastewaters before treatment has been shown to improve the removal of toxic metals. In some cases this iron is an integral part of the industrial wastewater; in other cases iron is deliberately added as a pretreatment or first step of treatment. The iron functions to improve toxic metal removal by three mechanisms: the iron coprecipitates with toxic metals forming a stable precipitate which desolubilizes the toxic metal; the iron improves the settleability of the precipitate; and the large amount of iron reduces the fraction of toxic metal in the precipitate. Coprecipitation with iron has been practiced for many years incidentally when iron was a substantial constituent of raw wastewater and intentionally when iron salts were added as a coagulant aid. Aluminum or mixed iron-aluminum salt also have been used. The addition of iron for coprecipitation to aid in toxic metals removal is considered a routine part of state-of-the-art lime and settle technology which should be implemented as required to achieve optimal removal of toxic metals.

Coprecipitation using large amounts of ferrous iron salts is known as ferrite coprecipitation because magnetic iron oxide or ferrite is formed. The addition of ferrous salts (sulfate) is followed by alkali precipitation and air oxidation. The resultant precipitate is easily removed by filtration and may be removed magnetically.

Advantages and Limitations. Chemical precipitation has proved to be an effective technique for removing many pollutants from industrial wastewater. It operates at ambient conditions and is well suited to automatic control. The use of chemical precipitation may be limited because of interference by chelating agents, because of possible chemical interference with mixed wastewaters and treatment chemicals, or because of the potentially hazardous situation involved with the storage and handling of those chemicals. Metal molding and casting wastewaters do not normally contain chelating agents or complex pollutant matrix formations which would interfere with or limit the use of chemical precipitation. Lime is usually added as a slurry when used in hydroxide precipitation. The slurry must be kept well mixed and the addition lines periodically checked to prevent blocking of the lines, which may result from a buildup of solids. Also, lime precipitation usually makes recovery of the precipitated metals difficult, because of the heterogeneous nature of most lime sludges.

The major advantage of the sulfide precipitation process is that the extremely low solubility of most metal sulfides promotes very high metal removal efficiencies. In addition, sulfide can precipitate metals complexed with most complexing agents. The process demands care, however, in maintaining the pH of the solution at approximately 10 in order to restrict the generation of toxic hydrogen sulfide gas. For this reason, ventilation of the treatment tanks may be a necessary precaution in most installations. The use of insoluble sulfides reduces the problem of hydrogen sulfide evolution. As with hydroxide precipitation, excess sulfide ion must be present to drive the precipitation reaction to completion. Since the sulfide ion itself is toxic, sulfide addition must be carefully controlled to maximize heavy metals precipitation with a minimum of excess sulfide to avoid the necessity of post treatment. At very high excess sulfide levels and high pH, soluble mercury-sulfide compounds may also be formed. Where excess sulfide is present, aeration of the effluent stream can aid in oxidizing residual sulfide to the less harmful sodium sulfate (Na_2SO_4). The cost of sulfide precipitants is high in comparison to hydroxide precipitants, and disposal of metallic sulfide sludges may pose problems. An essential element in effective sulfide precipitation is the removal of precipitated solids from the wastewater and proper disposal in an appropriate site. Sulfide precipitation will also generate a higher volume of sludge than hydroxide precipitation, resulting in higher disposal and dewatering costs. This is especially true when ferrous sulfide is used as the precipitant.

Sulfide precipitation may be used as a polishing treatment after hydroxide precipitation-sedimentation. This treatment configuration may provide the better treatment effectiveness of sulfide precipitation while minimizing the variability caused by changes in raw waste and reducing the amount of sulfide precipitant required.

Operational Factors. Reliability: Alkaline chemical precipitation is highly reliable, although proper monitoring and control are required. Sulfide precipitation systems provide similar reliability.

Maintainability: The major maintenance needs involve periodic upkeep of monitoring equipment, automatic feeding equipment, mixing equipment, and other hardware. Removal of accumulated sludge is necessary for efficient operation of precipitation-sedimentation systems.

Solid Waste Aspects: Solids which precipitate out are removed in a subsequent treatment step. Ultimately, these solids require proper disposal.

Demonstration Status. Chemical precipitation of metal hydroxides is a classic waste treatment technology used by most industrial waste treatment systems. Chemical precipitation of some metals, in particular lead and antimony, in the carbonate form has been found to be feasible and is commercially used to permit metals recovery and water reuse. Full scale commercial sulfide precipitation units are in operation at numerous industrial wastewater installations. As noted earlier, sedimentation to remove precipitates is discussed separately.

Fifty-three metal molding and casting plants in the metal molding and casting data base operate chemical precipitation (lime or caustic) treatment systems. The Agency has reviewed available performance data for these treatment systems and has identified nine plants that have well-operated chemical precipitation treatment systems. The development of treated effluent concentrations based on the data for these well-operated treatment systems is described later in this section.

3. Emulsion Breaking

Emulsion breaking is the process of separating an emulsified oil and water mixture. Emulsified oils are used as coolants, lubricants, and antioxidants in many metal molding and casting operations. Discussions of the two methods of emulsion breaking, chemical and thermal, follow.

Chemical emulsion breaking can be accomplished as a batch process or as a continuous process. In the batch process, the mixture of emulsified oil and water is collected in large tanks equipped with agitators and a skimmer or some method of decanting. Decanting can be accomplished with a series of taps positioned at various levels. Using the taps sequentially, the separated material is drawn off of the surface of the tank contents. As an alternate method, water can be drawn off near the bottom of the tank until oil appears in the wastewater line. At this point, the oil is diverted to storage tanks for reprocessing or hauling by a licensed contractor. In the continuous process, a skimmer, skimming trough, or similar surface material removal device can be used to remove the material broken out of emulsion. The

treated effluent would then be discharged from the separation tank.

The chemical emulsion breaking process involves several steps. First, the pH of the solution is lowered to an acidic state (typically a pH of 3 to 4). The second step involves the addition of an iron or aluminum salt (e.g., ferrous sulfate), ferric chloride, or aluminum sulfate. These salts are used to break the emulsion and free the oils from the water. In conjunction with the addition of these salts, the mixture is agitated to ensure complete contact of the wastewater/oil mixture with the de-emulsifying agent. With the addition of the proper amount of metallic salts and thorough agitation, emulsions of oil at concentrations of 5,000 mg/l or more can be reduced to approximately 5 mg/l remaining oil. In the third step of the emulsion breaking process, sufficient time is allowed for the oil/water mixture to separate.

Differences in specific gravity will permit the oil to rise to the surface in approximately 2 to 8 hours. After separation, the normal procedure involves skimming or decanting the oil from the top of the tank. Heat, in the form of steam, can be added to decrease the separation time. The fourth and final step involves the addition of a chemical which desalts by precipitating metals from the remaining wastewater solution. Calcium chloride or lime are normally used as the desalting agents and will precipitate out the metallic ions in the wastewater.

Thermal emulsion breaking can also be operated as a continuous or batch process. In most cases, however, these systems are operated intermittently, due to the batch dump nature of most emulsified oil systems. The emulsified raw waste is collected in a holding tank until sufficient volume has accumulated to warrant operating the Thermal Emulsion Breaker (TEB). The TEB most commonly used is an evaporation-distillation-decantation apparatus which separates the spent emulsion into distilled water, oils and other floating particles, and sludge. Initially, the raw waste flows from the holding tank into the main conveyorized chamber. Warm dry air is passed over a large revolving drum which is partially submerged in the emulsion. Water evaporates from the surface of the drum and is carried upward through a filter and a condensing unit. The condensed water is discharged and can be reused as process makeup, while the air is reheated and returned to the evaporation stage. As the concentration of water in the main conveyorized chamber decreases, oil concentration increases and some gravity separation occurs. The oils and other emulsified wastes which separate flow over a weir into a decanting chamber. A rotating drum skimmer picks up oil from the surface of this chamber and discharges it for possible reprocessing or licensed contractor removal. Meanwhile, oily water is drawn from the bottom of the decanting chamber, reheated, and sent back into the main conveyorized chamber. This aids in increasing the concentration of oil in the main chamber and the amount of oil which floats to the top. Solids which settle out in the main chamber are removed

by a conveyor mechanism, called a flight scraper, which moves slowly so as not to disturb the settling action.

Application. Emulsion breaking technology can be applied to the treatment of emulsified solutions in the metal molding and casting industry wherever it is necessary to separate oils, fats, soaps, etc. from aqueous solutions.

Advantages and Limitations. The main advantage of the chemical emulsion breaking process is the high percentage of oil removal possible with this system (at least 99 percent in most cases). For proper and economical application of this process, the oily wastes (oil/water mixture) should be segregated from other wastewaters either by storage in a holding tank prior to treat ment or by direct inlet to the oily waste removal system from major collection points. Further, if significant quantities of free oils are present, it is advantageous to precede emulsion breaking with gravity sedimentation. Chemical and energy costs can be high, especially if heat is used to accelerate the process.

Advantages of the TEB include an extremely high percentage of oil removal (at least 99 percent in most cases), the separation of floating oil from settleable sludge, and the production of good quality water which is available for process reuse. In addition, no chemical additives are required and the operation is fully automatic, factors which reduce operating costs and maintenance requirements. Disadvantages of this system are few: the cost of heat to run the small boiler (about $80 a month for natural gas for an 1,140 liters/day (300 gallon per day) unit), and the necessary installation of a large storage tank. Some settling may occur in the holding tank, resulting in a more concentrated raw waste load during the first day or two of operation. TEB models are currently available to handle loads of 150, 300, and 600 gallons per day.

Operational Factors. Reliability: Chemical emulsion breaking can be highly reliable assuming adequate analysis in the selection of chemicals and proper operator training to ensure that the established procedures are followed.

Thermal emulsion breaking is also a very reliable process for the treatment of emulsified wastes.

Maintainability: For chemical emulsion breaking, routine maintenance is required on pumps, motors, and valves as well as periodic cleaning of the treatment tank to remove any sediment which may accumulate in the tank. The use of acid or acidic conditions will require a lined or coated tank, and the lining or coating should be checked periodically.

A TEB unit requires minimal routine maintenance of the TEB components, and periodic disposal of sludge and oil.

Solid Waste Aspects: Both methods of emulsion breaking generate sludge oils which must receive proper disposal.

Demonstration Status. Emulsion breaking is a common treatment technique used by a number of plants, particularly to treat aluminum and zinc die casting wastewater in the metal molding and casting industry. It is a proven method of effectively treating emulsified wastes.

4. Granular Bed Filtration

Filtration occurs in nature as the surface and ground waters are cleansed by sand. Silica sand, anthracite coal, and garnet are common filter media used in water treatment plants. These are usually supported by gravel. The media may be used singly or in combination. The multimedia filters may be arranged to maintain relatively distinct layers by virtue of balancing the forces of gravity, flow, and buoyancy on the individual particles. This is accomplished by selecting appropriate filter flow rates (gpm/sq-ft), media grain size, and density.

Granular bed filters may be classified in terms of filtration rate, filter media, flow pattern, or method of pressurization. Traditional rate classifications are slow sand, rapid sand, and high rate mixed media. In the slow sand filter, flux or hydraulic loading is relatively low, and removal of collected solids to clean the filter is therefore relatively infrequent. The filter is often cleaned by scraping off the inlet face (top) of the sand bed. In the higher rate filters, cleaning is frequent and is accomplished by a periodic backwash, opposite to the direction of normal flow.

A filter may use a single medium such as sand or diatomaceous earth, but dual and mixed (multiple) media filters allow higher flow rates and efficiencies. The dual media filter usually consists of a fine bed of sand under a coarser bed of anthracite coal. The coarse coal removes most of the influent solids, while the fine sand performs a polishing function. At the end of the backwash, the fine sand settles to the bottom because it is denser than the coal, and the filter is ready for normal operation. The mixed media filter operates on the same principle, with the finer, denser media at the bottom and the coarser, less dense media at the top. The usual arrangement is garnet at the bottom (outlet end) of the bed, sand in the middle, and anthracite coal at the top. Some mixing of these layers occurs and is, in fact, desirable.

The flow pattern is usually top-to-bottom, but other patterns are sometimes used. Upflow filters are sometimes used, and in a horizontal filter the flow is horizontal. In a biflow filter, the influent enters both the top and the bottom and exits laterally. The advantage of an upflow filter is that with an upflow backwash, the particles of a single filter medium are distributed and maintained in the desired coarse-to-fine (bottom-to-top) arrangement. The disadvantage is that the bed tends to

become fluidized, which ruins filtration efficiency. The biflow design is an attempt to overcome this problem.

The classic granular bed filter operates by gravity flow; however, pressure filters are fairly widely used. They permit higher solids loadings before cleaning and are advantageous when the filter effluent must be pressurized for further downstream treatment. In addition, pressure filter systems are often less costly for low to moderate flow rates.

Figure VII-3 depicts a high rate, dual media, gravity downflow granular bed filter, with self-stored backwash. Both filtrate and backwash are piped around the bed in an arrangement that permits gravity upflow of the backwash, with the stored filtrate serving as backwash. Addition of the indicated coagulant and polyelectrolyte usually results in a substantial improvement in filter performance.

Auxiliary filter cleaning is sometimes employed in the upper few inches of filter beds. This is conventionally referred to as surface wash and is accomplished by water jets just below the surface of the expanded bed during the backwash cycle. These jets enhance the scouring action in the bed by increasing the agitation.

An important feature for successful filtration and backwashing is the underdrain. This is the support structure for the bed. The underdrain provides an area for collection of the filtered water without clogging from either the filtered solids or the media grains. In addition, the underdrain prevents loss of the media with the water, and during the backwash cycle it provides even flow distribution over the bed. Failure to dissipate the velocity head during the filter or backwash cycle will result in bed upset and the need for major repairs.

Several standard approaches are employed for filter underdrains. The simplest one consists of a parallel porous pipe imbedded under a layer of coarse gravel and attached via a manifold to a header pipe for effluent removal. Other approaches to the underdrain system are known as the Leopold and Wheeler filter bottoms. Both of these incorporate false concrete bottoms with specific porosity configurations to provide drainage and velocity head dissipation.

Filter system operation may be manual or automatic. The filter backwash cycle may be on a timed basis, a pressure drop basis with a terminal value which triggers backwash, or a solids carryover basis from turbidity monitoring of the outlet stream. All of these schemes have been used successfully.

Application. Wastewater treatment plants often use granular bed filters for polishing after clarification, sedimentation, or other similar operations. Granular bed filtration thus has potential application to nearly all industrial plants. Chemical additives which enhance the upstream treatment equipment may or

may not be compatible with or enhance the filtration process. Normal operating flow rates for various types of filters are:

Slow Sand	2.04 - 5.30 l/sq m-hr
Rapid Sand	40.74 - 51.48 l/sq m-hr
High Rate Mixed Media	81.48 - 122.22 l/sq m-hr

Suspended solids are commonly removed from wastewater streams by filtering through a deep 0.3-0.9 m (1-3 feet) granular filter bed. The porous bed formed by the granular media can be designed to remove practically all suspended particles. Even colloidal suspensions (roughly 1 to 100 microns) are adsorbed on the surface of the media grains as they pass in close proximity in the narrow bed passages.

Advantages and Limitations. The principal advantages of granular bed filtration are its comparatively (to other filters) low initial and operating costs, reduced land requirements over other methods to achieve the same level of solids removal, and elimination of chemical additions to the discharge stream. However, the filter may require pretreatment if the solids level is high (over 100 mg/l). Operator training must be somewhat extensive due to the controls and periodic backwashing involved, and backwash must be stored and dewatered for economical disposal.

Operational Factors. Reliability: The recent improvements in filter technology have significantly improved filtration reliability. Control systems, improved designs, and good operating procedures have made filtration a highly reliable method of water treatment.

Maintainability: Granular bed filters may be operated with either manual or automatic backwash. In either case, they must be periodically inspected for media attrition, partial plugging, and leakage. Where backwashing is not used, collected solids must be removed by shoveling, and filter media must be at least partially replaced.

Solid Waste Aspects: Filter backwash is generally recycled within the wastewater treatment system, so that the solids ultimately appear in the clarifier sludge stream for subsequent dewatering. Alternatively, the backwash stream may be dewatered directly or, if there is no backwash, the collected solids may be disposed of in a suitable landfill. In either of these situations there is a solids disposal problem similar to that of clarifiers.

Demonstration Status. Granular bed filters are used at 32 metal molding and casting plants. They are also in common use in municipal treatment plants. Their use in polishing industrial clarifier effluent is increasing, and the technology is proven and conventional.

5. Oxidation by Potassium Permanganate

Permanganate oxidation is a chemical reaction by which wastewater pollutants can be oxidized. When the reaction is carried to completion, the by-products of the oxidation are not environmentally harmful. A large number of pollutants can be practically oxidized by permanganate, including cyanides, hydrogen sulfide, and a variety of toxic organic pollutants including phenol. In addition, the chemical oxygen demand (COD) and many odors in wastewaters and sludges can be significantly reduced by permanganate oxidation carried to its end point. Potassium permanganate can be added to wastewater in either dry or slurry form. As an example of the permanganate oxidation process, the following chemical equation shows the oxidation of phenol by potassium permanganate:

$$3C_6H_5(OH) + 28KMnO_4 + 5H_2 \text{ ---> } 18CO_2 + 28KOH + 28MnO_2$$

Potassium permanganate cleaves the aromatic ring structure of phenol to produce a straight chain aliphatic molecule. The aliphatic is then further oxidized to CO_2 and water.

One of the by-products of this oxidation is manganese dioxide (MnO_2), which occurs as a relatively stable hydrous colloid usually having a negative charge. These properties, in addition to its large surface area, enable manganese dioxide to act as a sorbent for metal cations, thus enhancing their removal from the wastewater.

Application. Commercial use of permanganate oxidation has been primarily for the control of phenol and waste odors. Several municipal waste treatment facilities report that initial hydrogen sulfide concentrations (causing serious odor problems) as high as 100 mg/l have been reduced to zero through the application of potassium permanganate. A variety of industries (including metal finishers and agricultural chemical manufacturers) have used permanganate oxidation to totally destroy phenol in their wastewaters.

Tests have been performed on foundry wastewater to determine the effectiveness and optimum operating conditions for oxidizing phenol (4-AAP) and priority organic pollutants with permanganate. These tests showed that optimum oxidation conditions occur at a pH of 9 standard units and a dosage of 20 mg/l of permanganate.

A retention time of 30 minutes was shown to be sufficient to ensure that oxidation reactions of phenol and other organics had gone to completion. These tests showed that permanganate oxidation is an effective method for reducing phenol (4-AAP) and priority organic pollutant concentrations in foundry wastewaters.

Advantages and Limitations. Permanganate oxidation has several advantages as a wastewater treatment technique. Handling and storage are facilitated by its non-toxic and non-corrosive nature. Performance has been proved in a number of municipal and

industrial applications. The tendency of the manganese dioxide by-product to act as a coagulant aid is a distinct advantage over other types of chemical treatment.

The cost of permanganate oxidation treatment can be limiting where very large dosages are required to oxidize wastewater pollutants. In addition, care must be taken in storage to prevent exposure to intense heat, acids, or reducing agents; exposure could create a fire hazard or cause explosions. Of greatest concern is the environmental hazard which the use of manganese chemicals in treatment could cause. Care must be taken to remove the manganese from treated water in a settling or clarification step before discharge.

Operational Factors. Reliability: Maintenance consists of periodic sludge removal and cleaning of pump feed lines. Frequency of maintenance is dependent on wastewater characteristics.

Solid Waste Aspects: Sludge is generated by the process where the manganese dioxide by-product tends to act as a coagulant aid. The sludge from permanganate oxidation can be collected and handled by standard sludge treatment and processing equipment.

Demonstration Status. The oxidation of wastewater pollutants by potassium permanganate is a proven treatment process in several types of industries. It has been shown effective in treating a wide variety of pollutants in both municipal and industrial wastes, including metal molding and casting wastewaters.

Pilot studies of potassium permanganate oxidation have been completed for treatment of metal molding and casting wastewaters. An industrial study of wastewaters from ferrous foundry (plant 14069) reduced phenol from 0.123 mg/l in raw wastewaters to <0.01 mg/l in treated effluent using a dosage rate of 10 mg/l (80:1, permanganate:phenol) of potassium permanganate. A second pilot treatability study, conducted by EPA, reduced phenol from 1.1 mg/l in raw wastewaters to 0.022 mg/l in treated effluent using a potassium permanganate dosage of 20 mg/l. Full-scale potassium permanganate oxidation was used by plant 10837 to pretreat a phenol-bearing wastewater stream prior to an emulsion breaking and clarification treatment facility. However, use of this system was discontinued because an existing biological treatment system used to treat domestic wastes at this plant effectively reduced total phenols. Reduced treatment efficiency at low raw wastewater phenol concentrations and heavy sludges were also cited as reasons for discontinuing operation, although no data or documentation were supplied to define these circumstances.

In another industrial application, potassium permanganate is used to treat a waste stream bearing 1 to 4 mg/l phenol. Potassium permanganate is added prior to a chemical precipitation, solids removal treatment system. Potassium permanganate dosages of from 5 to 20 mg/l produce a phenol-free effluent. Manganese dioxide, produced as a result of the oxidation reaction, is coagulated and

removed in the chemical precipitation, solids removal treatment system.

6. Pressure Filtration

Pressure filtration works by pumping the liquid through a filter material which is impenetrable to the solid phase. The positive pressure exerted by the feed pumps or other mechanical means provides the pressure differential which is the principal driving force. Figure VII-4 represents the operation of one type of pressure filter.

A typical pressure filtration unit consists of a number of plates or trays which are held rigidly in a frame to ensure alignment and which are pressed together between a fixed end and a traveling end. On the surface of each plate, a filter made of cloth or synthetic fiber is mounted. The feed stream is pumped into the unit and passes through holes in the trays along the length of the press until the cavities or chambers between the trays are completely filled. The solids are then entrapped, and a cake begins to form on the surface of the filter material. The water passes through the fibers, and the solids are retained.

At the bottom of the trays are drainage ports. The filtrate is collected and discharged to a common drain. As the filter medium becomes coated with sludge, the flow of filtrate through the filter drops sharply, indicating that the capacity of the filter has been exhausted. The unit must then be cleaned of the sludge. After the cleaning or replacement of the filter media, the unit is again ready for operation.

In a typical pressure filter, chemically preconditioned sludge detained in the unit for one to three hours under pressures varying from 5 to 13 atmospheres exhibited final solids content between 25 and 50 percent.

Application. Pressure filtration is used in metal molding and casting plants for sludge dewatering and also for direct removal of precipitated and other suspended solids from wastewater. Because dewatering is such a common operation in treatment systems, pressure filtration is a technique which can be found in many industries concerned with removing solids from their waste stream.

Advantages and Limitations. The pressures which may be applied to a sludge for removal of water by filter presses that are currently available range from 5 to 13 atmospheres. As a result, pressure filtration may reduce the amount of chemical pretreatment required for sludge dewatering. Sludge retained in the form of the filter cake has a higher percentage of solids than that from centrifuge or vacuum filter. Thus, it can be easily accommodated by materials handling systems.

As a primary solids removal technique, pressure filtration requires less space than clarification and is well suited to

streams with high solids loadings. The sludge produced may be disposed without further dewatering, but the amount of sludge is increased by the use of filter precoat materials (usually diatomaceous earth). Also, cloth pressure filters often do not achieve as high a degree of effluent clarification as clarifiers or granular media filters.

Two disadvantages associated with pressure filtration in the past have been the short life of the filter cloths and lack of automation. New synthetic fibers have largely offset the first of these problems. Also, units with automatic feeding and pressing cycles are now available.

For larger operations, the relatively high space requirements, as compared to those of a centrifuge, could be prohibitive in some situations.

Operational Factors. Reliability: With proper pretreatment, design, and control, pressure filtration is a highly dependable system.

Maintainability: Maintenance consists of periodic cleaning or replacement of the filter media, drainage grids, drainage piping, filter pans, and other parts of the system. If the removal of the sludge cake is not automated, additional time is required for this operation.

Solid Waste Aspects: Because it is generally drier than other types of sludges, the filter sludge cake can be handled with relative ease. The accumulated sludge may be disposed by any of the accepted procedures depending on its chemical composition.

The levels of toxic metals present in sludge from treating metal molding and casting wastewater necessitate proper disposal.

Demonstration Status. Pressure filtration is a commonly used technology in a great many commercial applications. Pressure filtration is employed by 28 plants in the metal molding and casting data base.

7. Settling

Settling is a process which removes solid particles from a liquid matrix by gravitational force. This is done by reducing the velocity of the feed stream in a large volume tank or lagoon so that gravitational settling can occur. Figure VII-5 shows two typical settling devices.

Settling is often preceded by chemical precipitation which converts dissolved pollutants to solid form and by coagulation which enhances settling by coagulating suspended precipitates into larger, faster settling particles.

If no chemical pretreatment is used, the wastewater is fed into a tank or lagoon where it loses velocity and the suspended solids

are allowed to settle out. Long retention times are generally required. Accumulated sludge can be collected either periodically or continuously and either manually or mechanically. Simple settling, however, may require excessively large catchments, and long retention times (days as compared with hours) to achieve high particulate removal efficiencies. Because of this, addition of settling aids such as alum or polymeric flocculants is often economically attractive.

In practice, chemical precipitation often precedes settling, and inorganic coagulants or polyelectrolytic flocculants are usually added as well. Common coagulants include sodium sulfate, sodium aluminate, ferrous or ferric sulfate, and ferric chloride. Organic polyelectrolytes vary in structure, but all usually form larger floc particles than coagulants used alone.

Following this pretreatment, the wastewater can be fed into a holding tank or lagoon for settling, but is more often piped into a clarifier for the same purpose. A clarifier reduces space requirements, reduces retention time, and increases solids removal efficiency. Conventional clarifiers generally consist of a circular or rectangular tank with a mechanical sludge collecting device or with a sloping funnel-shaped bottom designed for sludge collection. In advanced settling devices, inclined plates, slanted tubes, or a lamellar network may be included within the clarifier tank in order to increase the effective settling area, increasing capacity. A fraction of the sludge stream is often recirculated to the inlet, promoting formation of a denser sludge.

Settling is based on the ability of gravity to cause small particles to fall or settle (Stokes' Law) through the fluid they are suspended in. Presuming that the factors affecting chemical precipitation are controlled to achieve a readily settleable precipitate, the principal factors controlling settling are the particle characteristics and the upflow rate of the suspending fluid. When the effective settling area is great enough to allow settling, any increase in the effective settling area will produce no increase in solids removal.

Therefore, if a plant has installed equipment that provides the appropriate overflow rate, the precipitated metals in the effluent can be effectively removed. The number of settling devices operated in series or in parallel by a facility is not important with regard to suspended solids removal; rather it is important that the settling devices provide sufficient effective settling area.

Another important facet of sedimentation theory is that diminishing removal of suspended solids is achieved for a unit increase in the effective settling area. Generally, it has been found that suspended solids removal performance varies with the effective upflow rate. Qualitatively the performance increases asymmetrically to a maximum level beyond which a decrease in upflow rate provides incrementally insignificant increases in

removal. This maximum level is dictated by particle size distribution, density characteristic of the particles and the water matrix, chemicals used for precipitation and pH at which precipitation occurs.

Application. Settling or clarification is used extensively in the metal molding and casting category to remove particulate matter and/or precipitated metals. Settling can be used to remove most suspended solids in a particular waste stream; thus it is used extensively by many different industrial waste treatment facilities. Because most metal ion pollutants are readily converted to solid metal hydroxide precipitates, settling is of particular use in those industries associated with metal production, metal finishing, metal working, and any other industry with high concentrations of metal ions in their wastewaters. In addition to priority pollutant metals, suitably precipitated materials effectively removed by settling include aluminum, iron, manganese, molybdenum, fluoride, phosphate, and many others.

A properly operating settling system can efficiently remove suspended solids, precipitated metal hydroxides, and other impurities from wastewater. The performance of the process depends on a variety of factors, including the density and particle size of the solids, the effective charge on the suspended particles, and the types of chemicals used in pretreatment. The site of flocculant or coagulant addition also may significantly influence the effectiveness of clarification. If the flocculant is subjected to too much mixing before entering the clarifier, the complexes may be sheared and the settling effectiveness diminished. At the same time, the flocculant must have sufficient mixing and reaction time in order for effective set-up and settling to occur. Plant personnel have observed that the line or trough leading into the clarifier is often the most efficient site for flocculant addition. The performance of simple settling is a function of the retention time, particle size and density, and the surface area of the basin.

Advantages and Limitations. The major advantage of simple settling is its simplicity as demonstrated by the gravitational settling of solid particulate waste in a holding tank or lagoon. The major problem with simple settling is the long retention time necessary to achieve complete settling, especially if the specific gravity of the suspended matter is close to that of water. Some materials, particularly dissolved metals, cannot be practically removed by simple settling alone.

Settling performed in a clarifier is effective in removing slow-settling suspended matter in a shorter time and in less space than a simple settling system. Also, effluent quality is often better from a clarifier. The cost of installing and maintaining a clarifier, however, is substantially greater than the costs associated with simple settling.

Inclined plate, slant tube, and lamella settlers have even higher removal efficiencies than conventional clarifiers, and greater capacities per unit area are possible. Installed costs for these advanced clarification systems are claimed to be one half the cost of conventional systems of similar capacity.

Operational Factors. Reliability: Settling can be a highly reliable technology for removing suspended solids. Sufficient retention time and regular sludge removal are important factors affecting the reliability of all settling systems. Proper control of pH adjustment, chemical precipitation, and coagulant or flocculant addition are additional factors affecting settling efficiencies in systems (frequently clarifiers) where these methods are used.

Those advanced settlers using slanted tubes, inclined plates, or a lamellar network may require prescreening of the waste in order to eliminate any fibrous materials which could potentially clog the system. Some installations are especially vulnerable to shock loadings, as from storm water runoff, but proper system design will prevent this.

Maintainability: When clarifiers or other advanced settling devices are used, the associated system utilized for chemical pretreatment and sludge dragout must be maintained on a regular basis. Routine maintenance of mechanical parts is also necessary. Lagoons require little maintenance other than periodic sludge removal.

Demonstration Status. Settling represents the typical method of solids removal and is employed extensively in industrial waste treatment. Sedimentation or clarification are used extensively in the metal molding and casting category; 179 plants in the metal molding and casting data base report the use of settling technology.

Settling is used both as part of end-of-pipe treatment and within process water recycle systems.

8. Skimming

Pollutants with a specific gravity less than water will often float unassisted to the surface of the wastewater. Skimming removes these floating wastes. Skimming normally takes place in a tank designed to allow the floating debris to rise and remain on the surface, while the liquid flows to an outlet located below the floating layer. Skimming devices are therefore suited to the removal of non-emulsified oils from raw waste streams. Common skimming mechanisms include the rotating drum type, which picks up oil from the surface of the water as it rotates. A doctor blade scrapes oil from the drum and collects it in a trough for disposal or reuse. The water portion is allowed to flow under the rotating drum. Occasionally, an underflow baffle is installed after the drum; this has the advantage of retaining any floating oil which escapes the drum skimmer. The belt type

skimmer is pulled vertically through the water, collecting oil which is scraped off from the surface and collected in a drum. Gravity separators, such as the API type, utilize overflow and underflow baffles to skim a floating oil layer from the surface of the wastewater. An overflow-underflow baffle allows a small amount of wastewater (the oil portion) to flow over into a trough for disposition or reuse while the majority of the water flows underneath the baffle. This is followed by an overflow baffle, which is set at a height relative to the first baffle such that only the oil bearing portion will flow over the first baffle during normal plant operation. A diffusion device, such as a vertical slot baffle, aids in creating a uniform flow through the system and in increasing oil removal efficiency.

Application. Oil skimming is used at metal molding and casting plants to remove free oil from wastewater. Free oil originates from machinery and die lubricants, mold release agents, hydraulic system leaks, and oily material collected by melting furnace and dust scrubbers. Skimming is applicable to any waste stream containing pollutants which float to the surface. It is commonly used to remove free oil, grease, and soaps. Skimming is often used in conjunction with emulsion breaking, air flotation or clarification in order to increase its effectiveness.

The removal efficiency of a skimmer is partly a function of the retention time of the water in the tank. Larger, more buoyant particles require less retention time than smaller particles. Thus, the efficiency also depends on the composition of the waste stream. The retention time required to allow phase separation and subsequent skimming varies from 1 to 15 minutes, depending on the wastewater characteristics.

API or other gravity-type separators tend to be more suitable for use where the amount of surface oil flowing through the system is consistently significant. Figure VII-6 depicts a typical gravity-type separator. Drum and belt type skimmers are applicable to waste streams which evidence smaller amounts of floating oil and where surges of floating oil are not a problem. Using an API separator system in conjunction with a drum type skimmer is a very effective method of removing floating contaminants from non-emulsified oily waste streams.

Skimming which removes oil and grease will also remove organic priority pollutants. High molecular weight organics in particular are much more soluble in organic solvents than in water. Thus they are much more concentrated in the oil phase that is skimmed than in the wastewater. The ratio of solubilities of a compound in oil and water phases is called the partition coefficient. The logarithm of the partition coefficients for selected polynuclear aromatic hydrocarbon (PAH) and other toxic organic compounds in octanol and water are presented later in this section under the discussion of treatment option development.

Advantages and Limitations. Skimming as a pretreatment is effective in removing naturally floating waste material. It also improves the performance of subsequent downstream treatments. Many pollutants, particularly dispersed or emulsified oil, will not float "naturally" but require additional treatments. Therefore, skimming alone may not remove all the pollutants capable of being removed by air flotation or other more sophisticated technologies.

Operational Factors. Reliability: Because of its simplicity, skimming is a very reliable technique.

Maintainability: The skimming mechanism requires periodic lubrication, adjustment, and replacement of worn parts.

Solid Waste Aspects: The collected layer of debris must be disposed of by contractor removal, landfill, or incineration. Because relatively large quantities of water are present in the collected wastes, incineration is not always a viable disposal method.

Demonstration Status. Skimming is a common operation utilized extensively by industrial waste treatment systems. Oil skimming is used at 61 plants in the metal molding and casting data base.

9. Vacuum Filtration

In wastewater treatment plants, sludge dewatering by vacuum filtration generally uses cylindrical drum filters. These drums have a filter medium which may be cloth made of natural or synthetic fibers or a wire-mesh fabric. The drum is suspended above and dips into a vat of sludge. As the drum rotates slowly, part of its circumference is subject to an internal vacuum that draws sludge to the filter medium. Water is drawn through the porous filter cake to a discharge port, and the dewatered sludge, loosened by compressed air, is scraped from the filter mesh. Because the dewatering of sludge on vacuum filters is relatively expensive per kilogram of water removed, the liquid sludge is frequently thickened prior to processing. A vacuum filter is shown in Figure VII-7.

The function of vacuum filtration is to reduce the water content of sludge, so that the solids content increases from about 5 percent to about 30 percent.

Application. Vacuum filters are frequently used both in municipal treatment plants and in a wide variety of industries including the metal molding and casting industry. They are most commonly used in larger facilities, which may have a thickener to double the solids content of clarifier sludge before vacuum filtering.

Advantages and Limitations. Although the initial cost and area requirement of the vacuum filtration system are higher than those of a centrifuge, the operating cost is lower, and no special

provisions for sound and vibration protection need be made. The dewatered sludge from this process is in the form of a moist cake and can be conveniently handled.

Operational Factors. Reliability: Vacuum filter systems have proven reliable at many industrial and municipal treatment facilities. At present, the largest municipal installation is at the West Southwest wastewater treatment plant of Chicago, Illinois, where 96 large filters were installed in 1925, functioned approximately 25 years, and then were replaced with larger units. Original vacuum filters at Minneapolis-St. Paul, Minnesota, now have over 28 years of continuous service, and Chicago has some units with similar or greater service life.

Maintainability: Maintenance consists of the cleaning or replacement of the filter media, drainage grids, drainage piping, filter pans, and other parts of the equipment. Experience in a number of vacuum filter plants indicates that maintenance consumes approximately 5 to 15 percent of the total time. If carbonate buildup or other problems are unusually severe, maintenance time may be as high as 20 percent. For this reason, it is desirable to maintain one or more spare units.

If intermittent operation is used, the filter equipment should be drained and washed each time it is taken out of service. An allowance for this wash time must be made in filtering schedules.

Solid Waste Aspects: Vacuum filters generate a solid cake which is usually trucked directly to landfill. All of the metals extracted from the plant wastewater are concentrated in the filter cake as hydroxides, oxides, sulfides, or other salts.

Demonstration Status. Vacuum filtration has been widely used for many years. It is a fully proven, conventional technology for sludge dewatering. The use of vacuum filtration is reported by 22 plants in the metal molding and casting data base.

MINOR TECHNOLOGIES

Several other end-of-pipe treatment technologies were considered for possible application in this category. These include:

10. Centrifugation,
11. Coalescing,
12. Flotation,
13. Gravity sludge thickening,
14. Sludge bed drying, and
15. Ultrafiltration.

These technologies are presented here.

10. Centrifugation

Centrifugation is the application of centrifugal force to separate solids and liquids in a liquid-solid mixture or to

effect concentration of the solids. The application of centrifugal force is effective because of the density differential normally found between the insoluble solids and the liquid in which they are contained. As a waste treatment procedure, centrifugation is applied to dewatering of sludges. One type of centrifuge is shown in Figure VII-8.

There are three common types of centrifuges; disc, basket, and conveyor. All three operate by removing solids under the influence of centrifugal force. The fundamental difference among the three types is the method by which solids are collected in and discharged from the bowl.

In the disc centrifuge, the sludge feed is distributed between narrow channels that are present as spaces between stacked conical discs. Suspended particles are collected and discharged continuously through small orifices in the bowl wall. The clarified effluent is discharged through an overflow weir.

A second type of centrifuge which is useful in dewatering sludges is the basket centrifuge. In this type of centrifuge, sludge feed is introduced at the bottom of the basket, and solids collect at the bowl wall while clarified effluent overflows the lip ring at the top. Since the basket centrifuge does not have provision for continuous discharge of collected cake, operation requires interruption of the feed for cake discharge for a minute or two in a 10- to 30-minute overall cycle.

The third type of centrifuge commonly used in sludge dewatering is the conveyor type. Sludge is fed through a stationary feed pipe into a rotating bowl in which the solids are settled out against the bowl wall by centrifugal force. From the bowl wall, the solids are moved by a screw to the end of the machine, at which point they are discharged. The liquid effluent is discharged through ports after passing the length of the bowl under centrifugal force.

The performance of sludge dewatering by centrifugation depends on the feed rate, the rotational velocity of the drum, and the sludge composition and concentration. Assuming proper design and operation, the solids content of the sludge can be increased to 20 to 35 percent.

Application. Virtually all industrial waste treatment systems producing sludge can use centrifugation to dewater it. Centrifugation is currently being used by a wide range of industrial concerns.

Advantages and Limitations. Sludge dewatering centrifuges have minimal space requirements and show a high degree of effluent clarification. The operation is simple, clean, and relatively inexpensive. The area required for a centrifuge system installation is less than that required for a filter system or sludge drying bed of equal capacity, and the initial cost is lower.

Centrifuges have a high power cost that partially offsets the low initial cost. Special consideration must also be given to providing sturdy foundations and soundproofing because of the vibration and noise that result from centrifuge operation. Adequate electrical power must also be provided since large motors are required. The major difficulty encountered in the operation of centrifuges has been the disposal of the concentrate which is relatively high in suspended, nonsettling solids.

Operational Factors. Reliability: Centrifugation is highly reliable with proper control of factors such as sludge feed, consistency, and temperature. Pretreatment such as grit removal and coagulant addition may be necessary, depending on the composition of the sludge and on the type of centrifuge employed.

Maintainability: Maintenance consists of periodic lubrication, cleaning, and inspection. The frequency and degree of inspection required varies depending on the type of sludge solids being dewatered and the maintenance service conditions. If the sludge is abrasive, it is recommended that the first inspection of the rotating assembly be made after approximately 1,000 hours of operation. If the sludge is not abrasive or corrosive, then the initial inspection might be delayed. Centrifuges not equipped with a continuous sludge discharge system require periodic shutdowns for manual sludge cake removal.

Solid Waste Aspects: Sludge dewatered in the centrifugation process may be disposed of by landfill. The clarified effluent (centrate), if high in dissolved or suspended solids, may require further treatment prior to discharge.

Demonstration Status. Centrifugation is currently used in a great many commercial applications to dewater sludge. Work is underway to improve the efficiency, increase the capacity, and lower the costs associated with centrifugation.

11. Coalescing

The basic principle of coalescence involves the preferential wetting of a coalescing medium by oil droplets which accumulate on the medium and then rise to the surface of the solution as they combine to form larger particles. The most important requirements for coalescing media are wettability for oil and large surface area. Monofilament line is sometimes used as a coalescing medium.

Coalescing stages may be integrated with a wide variety of gravity oil separation devices, and some systems may incorporate several coalescing stages. In general, a preliminary oil skimming step is desirable to avoid overloading the coalescer.

One commercially marketed system for oily waste treatment combines coalescing with inclined plate separation and filtration. In this system, the oily wastes flow into an

inclined plate settler. This unit consists of a stack of inclined baffle plates in a cylindrical container with an oil collection chamber at the top. The oil droplets rise and impinge upon the undersides of the plates. They then migrate upward to a guide rib which directs the oil to the oil collection chamber, from which oil is discharged for reuse or disposal.

The oily water continues on through another cylinder containing replaceable filter cartridges, which remove suspended particles from the waste. From there the wastewater enters a final cylinder in which the coalescing material is housed. As the oily water passes through the many small, irregular, continuous passages in the coalescing material, the oil droplets coalesce and rise to an oil collection chamber.

Application. Coalescing is used to treat oily wastes which do not separate readily in simple gravity systems. The three-stage system described above has achieved effluent concentrations of 10 to 15 mg/l oil and grease from raw waste concentrations of 1,000 mg/l or more.

Advantages and Limitations. Coalescing allows removal of oil droplets too finely dispersed for conventional gravity separation-skimming technology. It also can significantly reduce the residence times (and therefore separator volumes) required to achieve separation of oil from some wastes. Because of its simplicity, coalescing provides generally high reliability and low capital and operating costs. Coalescing is not generally effective in removing soluble or chemically stabilized emulsified oils. To avoid plugging, coalescers must be protected by pretreatment from very high concentrations of free oil and grease and suspended solids. Frequent replacement of prefilters may be necessary when raw waste oil concentrations are high.

Operational Factors. Reliability: Coalescing is inherently highly reliable since there are no moving parts, and the coalescing substrate (monofilament, etc.) is inert in the process and therefore not subject to frequent regeneration or replacement requirements. Large loads or inadequate pretreatment, however, may result in plugging or bypass of coalescing stages.

Maintainability: Maintenance requirements are generally limited to replacement of the coalescing medium on an infrequent basis.

Solid Waste Aspects: No appreciable solid waste is generated by this process.

Demonstration Status. Coalescing has been fully demonstrated in industries generating oily wastewater, although no metal molding and casting plants specifically reported its use.

12. Flotation

Flotation is the process of causing particles such as metal hydroxides or oil to float to the surface of a tank where they

can be concentrated and removed. This is accomplished by releasing gas bubbles which attach to the solid particles, increasing their buoyancy and causing them to float. In principle, this process is the opposite of sedimentation. Figure VII-9 shows one type of flotation system.

Flotation is used primarily in the treatment of wastewater streams that carry heavy loads of finely divided suspended solids or oil. Solids having a specific gravity only slightly greater than 1.0, which would require abnormally long sedimentation times, may be removed in much less time by flotation. Dissolved air flotation is of greatest interest in removing oil from water and is less effective in removing heavier precipitates.

This process may be performed in several ways: foam, dispersed air, dissolved air, gravity, and vacuum flotation are the most commonly used techniques. Chemical additives are often used to enhance the performance of the flotation process.

The principal difference among types of flotation is the method of generating the minute gas bubbles (usually air) in a suspension of water and small particles. Chemicals may be used to improve the efficiency with any of the basic methods. Descriptions of the different flotation techniques and the method of bubble generation for each process follow.

Froth Flotation - Froth flotation is based on differences in the physiochemical properties in various particles. Wetability and surface properties affect the particles' ability to attach themselves to gas bubbles in an aqueous medium. In froth flotation, air is blown through the solution containing flotation reagents. The particles with water repellant surfaces stick to air bubbles as they rise and are brought to the surface. A mineralized froth layer, with mineral particles attached to air bubbles, is formed. Particles of other minerals which are readily wetted by water do not stick to air bubbles and remain in suspension.

Dispersed Air Flotation - In dispersed air flotation, gas bubbles are generated by introducing the air by means of mechanical agitation with impellers or by forcing air through porous media. Dispersed air flotation is used mainly in the metallurgical industry.

Dissolved Air Flotation - In dissolved air flotation, bubbles are produced by releasing air from a supersaturated solution under relatively high pressure. There are two types of contact between the gas bubbles and particles. The first type is predominant in the flotation of flocculated materials and involves the entrapment of rising gas bubbles in the flocculated particles as they increase in size. The bond between the bubble and particle is one of physical capture only. The second type of contact is one of adhesion. Adhesion results from the intermolecular attraction exerted at the interface between the solid particle and gaseous bubble.

Vacuum Flotation - This process consists of saturating the wastewater with air either directly in an aeration tank, or by permitting air to enter on the suction of a wastewater pump. A partial vacuum is applied, which causes the dissolved air to come out of solution as minute bubbles. The bubbles attach to solid particles and rise to the surface to form a scum blanket, which is normally removed by a skimming mechanism. Grit and other heavy solids that settle to the bottom are generally raked to a central sludge pump for removal. A typical vacuum flotation unit consists of a covered cylindrical tank in which a partial vacuum is maintained. The tank is equipped with scum and sludge removal mechanisms. The floating material is continuously swept to the tank periphery, automatically discharged into a scum trough, and removed from the unit by a pump also under partial vacuum. Auxiliary equipment includes an aeration tank for saturating the wastewater with air, a tank with a short retention time for removal of large bubbles, vacuum pumps, and sludge pumps.

Application. The primary variables for flotation design are pressure, feed solids concentration, and retention period. The suspended solids in the effluent decrease, and the concentration of solids in the float increases with increasing retention period. When the flotation process is used primarily for clarification, a retention period of 20 to 30 minutes usually is adequate for separation and concentration.

Advantages and Limitations. Some advantages of the flotation process are the high levels of solids separation achieved in many applications, the relatively low energy requirements, and the adaptability to meet the treatment requirements of different waste types. Limitations of flotation are that it often requires addition of chemicals to enhance process performance and that it generates large quantities of solid waste.

Operational Factors. Reliability: Flotation systems normally are very reliable with proper maintenance of the sludge collector mechanism and the motors and pumps used for aeration.

Maintainability: Routine maintenance is required on the pumps and motors. The sludge collector mechanism is subject to possible corrosion or breakage and may require periodic replacement.

Solid Waste Aspects: Chemicals are commonly used to aid the flotation process by creating a surface or a structure that can easily adsorb or entrap air bubbles. Inorganic chemicals, such as the aluminum and ferric salts, and activated silica, can bind the particulate matter together and create a structure that can entrap air bubbles. Various organic chemicals can change the nature of either the air-liquid interface or the solid-liquid interface, or both. These compounds usually collect on the interface to bring about the desired changes. The added chemicals plus the particles in solution combine to form a large volume of sludge which must be further treated or properly

disposed.

Demonstration Status. Flotation is a fully developed process and is readily available for the treatment of a wide variety of industrial waste streams.

13. Gravity Sludge Thickening

In the gravity thickening process, dilute sludge is fed from a primary settling tank or clarifier to a thickening tank where rakes stir the sludge gently to increase the sludge density and to push it to a central collection well. The supernatant is returned to the primary settling tank. The thickened sludge that collects on the bottom of the tank is pumped to dewatering equipment or hauled away. Figure VII-10 shows the construction of a gravity thickener.

Application. Thickeners are generally used in facilities where the sludge is to be further dewatered by a compact mechanical device such as a vacuum filter or centrifuge. Doubling the solids content in the thickener substantially reduces capital and operating cost of the subsequent dewatering device and also reduces cost for hauling. The process is potentially applicable to almost any industrial plant.

Organic sludges from sedimentation units of one to two percent solids concentration can usually be gravity thickened to 6 to 10 percent; chemical sludges can be thickened to 4 to 6 percent.

Advantages and Limitations. The principal advantage of a gravity sludge thickening process is that it facilitates further sludge dewatering. Other advantages are high reliability and minimum maintenance requirements.

Limitations of the sludge thickening process are its sensitivity to the flow rate through the thickener and the sludge removal rate. These rates must be low enough not to disturb the thickened sludge.

Operational Factors. Reliability: Reliability is high with proper design and operation. A gravity thickener is designed on the basis of square feet per pound of solids per day, in which the required surface area is related to the solids entering and leaving the unit. Thickener area requirements are also expressed in terms of mass loading, grams of solids per square meter per day (lbs/sq ft/day).

Maintainability: Twice a year, a thickener must be shut down for lubrication of the drive mechanisms. Occasionally, water must be pumped back through the system in order to clear sludge pipes.

Solid Waste Aspects: Thickened sludge from a gravity thickening process will usually require further dewatering prior to disposal, incineration, or drying. The clear effluent may be recirculated in part, or it may be subjected to further treatment

prior to discharge.

Demonstration Status. Gravity sludge thickeners are used through-out this industry to reduce water content to a level where the sludge may be efficiently handled. Further dewatering is usually practiced to minimize costs of hauling the sludge to approved landfill areas.

14. Sludge Bed Drying

As a waste treatment procedure, sludge bed drying is employed to reduce the water content of a variety of sludges to the point where they are amenable to mechanical collection and removal to landfill. These beds usually consist of 15 to 45 cm (6 to 18 in.) of sand over a 30 cm (12 in.) deep gravel drain system made up of 3 to 6 mm (1/8 to 1/4 in.) graded gravel overlying drain tiles. Figure VII-11 shows the construction of a drying bed.

Drying beds are usually divided into sectional areas approximately 7.5 meters (25 ft) wide x 30 to 60 meters (100 to 200 ft) long. The partitions may be earth embankments, but more often are made of planks and supporting grooved posts.

To apply liquid sludge to the sand bed, a closed conduit or a pressure pipeline with valved outlets at each sand bed section is often employed. Another method of application is by means of an open channel with appropriately placed side openings which are controlled by slide gates. With either type of delivery system, a concrete splash slab should be provided to receive the falling sludge and prevent erosion of the sand surface.

Where it is necessary to dewater sludge continuously throughout the year regardless of the weather, sludge beds may be covered with a fiberglass reinforced plastic or other roof. Covered drying beds permit a greater volume of sludge drying per year in most climates because of the protection afforded from rain or snow and because of more efficient control of temperature. Depending on the climate, a combination of open and enclosed beds will provide maximum utilization of the sludge bed drying facilities.

Application. Sludge drying beds are a means of dewatering sludge from clarifiers and thickeners. They are widely used both in municipal and industrial treatment facilities.

Dewatering of sludge on sand beds occurs by two mechanisms: filtration of water through the bed and evaporation of water as a result of radiation and convection. Filtration is generally complete in one to two days and may result in solids concentrations as high as 15 to 20 percent. The rate of filtration depends on the drainability of the sludge.

The rate of air drying of sludge is related to temperature, relative humidity, and air velocity. Evaporation will proceed at a constant rate to a critical moisture content, then at a falling

rate to an equilibrium moisture content. The average evaporation rate for a sludge is about 75 percent of that from a free water surface.

Advantages and Limitations. The main advantage of sludge drying beds over other types of sludge dewatering is the relatively low cost of construction, operation, and maintenance.

Its disadvantages are the large area of land required and long drying times that depend, to a great extent, on climate and weather.

Operational Factors. Reliability: Reliability is high with favorable climatic conditions, proper bed design and care to avoid excessive or unequal sludge application. If climatic conditions in a given area are not favorable for adequate drying, a cover may be necessary.

Maintainability: Maintenance consists basically of periodic removal of the dried sludge. Sand removed from the drying bed with the sludge must be replaced and the sand layer resurfaced.

The resurfacing of sludge beds is the major expense item in sludge bed maintenance, but there are other areas which may require attention. Underdrains occasionally become clogged and have to be cleaned. Valves or sludge gates that control the flow of sludge to the beds must be kept watertight. Provision for drainage of lines in winter should be provided to prevent damage from freezing. The partitions between beds should be tight so that sludge will not flow from one compartment to another. The outer walls or banks around the beds should also be watertight.

Solid Waste Aspects: The full sludge drying bed must either be abandoned or the collected solids must be removed to a landfill. These solids contain whatever metals or other materials were settled in the clarifier. Metals will be present as hydroxides, oxides, sulfides, or other salts. They have the potential for leaching and contaminating ground water, whatever the location of the semidried solids. Thus the abandoned bed or landfill should include provision for runoff control and leachate monitoring.

Demonstration Status. Sludge beds have been in common use in both municipal and industrial facilities for many years. However, protection of ground water from contamination has not always been adequate.

15. Ultrafiltration

Ultrafiltration (UF) is a process which uses semipermeable polymeric membranes to separate emulsified or colloidal materials suspended in a liquid phase by pressurizing the liquid so that it permeates the membrane. The membrane of an ultrafilter forms a molecular screen which retains molecular particles based on their differences in size, shape, and chemical structure. The membrane permits passage of solvents and lower molecular weight molecules.

At present, an ultrafilter is capable of removing materials with molecular weights in the range of 1,000 to 100,000 and particles of comparable or larger sizes.

In an ultrafiltration process, the feed solution is pumped through a tubular membrane unit. Water and some low molecular weight materials pass through the membrane under the applied pressure of 2 to 8 atm (10 to 100 psig). Emulsified oil droplets and suspended particles are retained, concentrated, and removed continuously. In contrast to ordinary filtration, retained materials are washed off the membrane filter rather than held by it. Figure VII-12 represents the ultrafiltration process.

Application. Ultrafiltration has potential application to metal molding and casting industry plants for separation of emulsified oils from a variety of waste streams, most notably die casting wastewater. Over 100 such units now operate in the United States, treating emulsified oils from a variety of industrial processes. Capacities of currently operating units range from a few hundred gallons a week to 50,000 gallons per day. Concentration of oily emulsions to 60 percent oil or more is possible. Oil concentrates of 40 percent or more are generally suitable for incineration, and the permeate can be treated further and in some cases recycled back to the process. In this way, it is possible to eliminate contractor removal costs for oil from some oily waste streams.

The permeate or effluent from the ultrafiltration unit is normally of a quality that can be reused in industrial applications or discharged directly. The concentrate from the ultrafiltration unit can be disposed of as any oily or solid waste.

Advantages and Limitations. Ultrafiltration is sometimes an attractive alternative to chemical treatment because of lower capital equipment, installation, and operating costs, very high oil and suspended solids removal, and little required pretreatment. It places a positive barrier between pollutants and effluent which reduces the possibility of extensive pollutant discharge due to operator error or upset in settling and skimming systems. Alkaline values in alkaline cleaning solutions can be recovered and reused in process.

A limitation of ultrafiltration for treatment of process effluents is its narrow temperature range (18° to 30°C) for satisfactory operation. Membrane life decreases with higher temperatures, but flux increases at elevated temperatures. Therefore, surface area requirements are a function of temperature and become a trade-off between initial costs and replacement costs for the membrane. In addition, ultrafiltration cannot handle certain solutions. Strong oxidizing agents, solvents, and other organic compounds can dissolve the membrane. Fouling is sometimes a problem, although the high velocity of the wastewater normally creates enough turbulence to keep fouling at a minimum. Large solids particles can sometimes puncture the

membrane and therefore must be removed by gravity settling or filtration prior to the ultrafiltration unit.

Operational Factors. Reliability: The reliability of an ultrafiltration system is dependent on the proper filtration, settling or other treatment of incoming waste streams to prevent damage to the membrane. Careful pilot studies should be done in each instance to determine necessary pretreatment steps and the exact membrane type to be used.

Maintainability: A limited amount of regular maintenance is required for the pumping system. In addition, membranes must be periodically changed. Maintenance associated with membrane plugging can be reduced by selection of a membrane with optimum physical characteristics and sufficient velocity of the waste stream. It is occasionally necessary to pass a detergent solution through the system to remove an oil and grease film which accumulates on the membrane. With proper maintenance, membrane life can be greater than twelve months.

Solid Waste Aspects: In the metal molding and casting category, ultrafiltration is used primarily to remove or recover liquid constituents of process wastewaters. The system reject (concentrated oils) could be recovered, reprocessed, or removed for disposal.

Demonstration Status. The ultrafiltration process is well developed and commercially available for treatment of wastewater or recovery of certain high molecular weight liquid and solid contaminants. This technology is demonstrated in the aluminum die casting process segment.

IN-PROCESS POLLUTION CONTROL TECHNIQUES

In general, the most cost-effective pollution reduction techniques available to any industry are those which prevent completely the entry of pollutants into process wastewater or reduce the volume of wastewater requiring treatment. These "in-process" controls can increase treatment effectiveness by reducing the volume of wastewater to treatment, resulting in more concentrated waste streams from which they can be more completely removed, or by eliminating pollutants which are not readily removed or which interfere with the treatment of other pollutants. They also frequently yield economic benefits in reduced water consumption, decreased waste treatment costs and decreased consumption or recovery of process materials.

Generally Applicable In-Process Control Techniques

Techniques which may be applied to reduce pollutant discharges from most metal molding and casting subcategories include wastewater segregation, water recycle and reuse, water use reduction, process modification (including flow reduction and dry air pollution control), and improved plant maintenance and housekeeping. Effective in-process control at most plants may

entail a combination of several of the above techniques.

Wastewater Segregation - The segregation of wastewater streams is an important element in implementing pollution control in the metal molding and casting category. Separation of noncontact cooling water from process wastewater prevents dilution of the process wastes and maintains the character of the noncontact stream for subsequent reuse or discharge.

Mixing process wastewater with noncontact cooling water increases the total volume of process wastewater. This has an adverse effect on both treatment performance and cost. The increased volume of wastewater increases the size and cost of treatment facilities. Since a given treatment technology has a specific treatment effectiveness and can only achieve certain discharge concentrations of pollutants, the total mass of pollutants which is discharged is increased with dilution by noncontact cooling water because the total volume of water discharged increases. Thus a plant which segregates noncontact cooling water and other nonprocess waters from process wastewater will almost always achieve a lower mass discharge of pollutants while substantially reducing treatment costs.

Metal molding and casting plants commonly produce multiple process and nonprocess wastewater streams. Nonprocess streams include wastewater streams that are reusable after little or no treatment. Reusable waters are most often noncontact cooling waters. This water is usually uncontaminated and can be recycled in a closed indirect cooling configuration, or it can be used as makeup for process water. Noncontact cooling water is commonly recycled for reuse in the metal molding and casting industry.

Wastewater Recycle and Reuse - The recycle or reuse of process wastewater is a particularly effective technique for the reduction of both pollutant discharges and treatment costs. The term "recycle" is used to designate the return of process wastewater, usually after some treatment, to the process or processes from which it originated, while "reuse" refers to the use of wastewater from one process in another. Both recycle and reuse of process wastewater are presently practiced at metal molding and casting plants, although recycle is more extensively used. Process water recycle is employed in all metal molding and casting process segments except investment casting. Table VII-4 shows the demonstration status of recycle in metal molding and casting process segments.

Both recycle and reuse are frequently possible without extensive treatment of the wastewater; process pollutants present in the waste stream are often tolerable (or occasionally even beneficial) for process use. Recycle or reuse in these instances yields cost savings by reducing the volume of wastewater requiring treatment. Where treatment is required for recycle or reuse, it is frequently considerably simpler than the treatment necessary to achieve effluent quality suitable for release to the environment. Treatment prior to recycle or reuse observed in

present practice is generally restricted to simple settling or chemical addition for scale and corrosion control. Since these treatment practices are less costly than those used prior to discharge, economic as well as environmental benefits are usually realized. In addition to these in-process recycle and reuse practices, some plants return part or all of the treated effluent from an end-of-pipe treatment system for further process use.

The rate of water used in wet air scrubbers is determined by the requirement for adequate contact with the air being scrubbed and not by the mass of pollutants to be removed. As a result, wastewater streams from once-through scrubbers are characteristically very dilute and high in volume. These streams can be recycled extensively without treatment or after simple settling with no deleterious effect on scrubber performance.

Wastewater from contact cooling operations also may contain low concentrations of pollutants which do not interfere with the recycle of these streams. In some cases, recycle of contact cooling water with no treatment is observed while in others, provisions for heat removal in cooling towers or closed heat exchangers is required.

To confirm the recycle rates reported as currently achieved by metal molding and casting plants surveyed, and in response to industry comments pertaining to recycle water chemistry, the Agency developed a recycle water chemistry model. The water chemistry model is based on a mass balance around a generalized wastewater recycle system depicted in Figure VII-13. Input variables to the model include make-up water quality, pollutant mass addition rate by the metal molding and casting process, treatment system performance, and sludge moisture content. EPA used the water chemistry model to evaluate the following:

- The scaling and corrosion tendencies of foundry wastewaters at varying levels of recycle.
- The appropriate levels of recycle attainable based on a theoretical analysis of recycle water chemistry.
- The recycle system control options that could be added to allow foundry processes to achieve high or complete recycle rates.
- The effect of different make-up water qualities on the ability of specific foundry processes to achieve high or complete recycle rates.
- The sensitivity of maximum recycle rate to sludge moisture content.
- The sensitivity of maximum recycle rate to co-treatment of wastewater (central treatment).

- o The sensitivity of maximum recycle rate to recycle loop treatment efficiency.

The development and execution of trial runs of the water chemistry model, as well as the data base supporting the model inputs, are documented in a report entitled "Technical Evaluation of High-Rate and Complete Recycle Systems for Foundry Industry Process Wastewater." That report is located in Section 22.12 of the record of the metal molding and casting rulemaking. A summary of the findings obtained by running the model under various input conditions is attached as Appendix B.

In general, based on the findings of the recycle model sensitivity analyses, the Agency has been able to confirm as achievable the recycle rates reported by metal molding and casting plants. In addition, the Agency has determined that:

a. With proper chemical control, make-up water quality does not have a significant influence on achievable recycle rates.

b. The solids content of well-dewatered sludges has no measurable impact on ability to recycle. For undewatered sludges at or below 5 percent solids, any impact would be positive (i.e., tend to increase recycle rates).

c. High rate recycle is achievable at plants employing central treatment.

Water Use Reduction - The volume of wastewater discharge from a plant or specific process operation may be reduced by simply eliminating excess flow and unnecessary water use. Often this may be accomplished with no change in the manufacturing process or equipment and without any capital expenditure. A comparison of the volumes of process water used in and discharged from equivalent process operations at different plants or on different days at the same plant indicates substantial opportunities for water use reductions. Additional reductions in process water use and discharge may be achieved by modifications to process techniques and equipment.

The practice of shutting off process water flow during periods when production units are not operating and of adjusting flow rates during periods of low production can prevent much unnecessary water use. Water may be shut off and controlled manually or through automatically controlled valves. Manual adjustments have been found to be somewhat unreliable in practice; production personnel often fail to turn off manual valves when production units are shut down and tend to increase water flow rates to maximum levels "to ensure good operation" regardless of production activity. Automatic shut-off valves may be used to turn off water flows when production units are inactive. Automatic adjustment of flow rates according to production levels requires more sophisticated control systems

incorporating production rate sensors.

Contract Hauling

Contract hauling refers to the industry practice of contracting with a firm to collect and transport wastes for off-site disposal. This practice is particularly applicable to low-volume, high concentration waste streams. Examples of such waste streams in the metal molding and casting industry are aluminum and zinc die casting waters.

The DCP data identified several waste solvent haulers, most of whom haul solvent in addition to their primary business of hauling waste oils. The value of waste solvents seems to be sufficient to make waste solvent hauling a viable business. Telephone interviews conducted during the development of metal finishing regulations indicate that the number of solvent haulers is increasing and that their operations are becoming more sophisticated because of the increased value of waste solvent. In addition, a number of chemical suppliers include waste hauling costs in their new solvent price. Some of the larger solvent refiners make credit arrangements with their clientele; for example, it was reported that one supplier returns 50 gallons of refined solvent for every 100 gallons hauled.

Lubricating Oil Recovery

The recycle of die lube oils is a common practice in the industry. The degree of recycle is dependent upon any in-line treatment (e.g., filtration to remove metal fines and other contaminants), and the useful life of the specific oil in its application. Usually, this involves continuous recycle of the oil, with losses in the recycle loop from evaporation, oil carried off by the metal product, and minor losses from in-line treatment. Some plants periodically replace the entire batch of oil once its required properties are depleted. In other cases, a continuous bleed or blowdown stream of oil is withdrawn from the recycle loop to maintain a constant level of oil quality. Fresh make-up oil is added to compensate for the blowdown and other losses, and in-line filtration is used between cycles.

Dry Air Pollution Control Devices

The use of dry air pollution control devices allows the elimination of waste streams with high pollution potential, i.e., waste streams from wet air pollution control devices. However, the choice of air pollution control equipment is complicated, and sometimes a wet system is the necessary choice. The important difference between wet and dry devices is that wet devices control gaseous pollutants as well as particulates.

Wet devices may be chosen over dry devices when any of the following factors are found: (1) the particle size is predominantly under 20 microns, (2) flammable particles or gases are to be treated and there is minimal combustion risk, (3) both

vapors and particles are to be removed from the carrier medium (4) the gases are corrosive and may damage dry air pollution control devices, and (5) the gases are extremely hot and can only be cooled using a spray cooler or other wet device.

Equipment for dry control of air emissions includes cyclones, dry electrostatic precipitators, fabric filters, and afterburners. These devices remove particulate matter, the first three by entrapment and the afterburners by combustion.

Afterburner use is limited to air emissions consisting mostly of combustible particles. Characteristics of the particulate-laden gas which affect the design and use of a device are gas density, temperature, viscosity, flammability, corrosiveness, toxicity, humidity, and dew point. Particulate characteristics which affect the design and use of a device are particle size, shape, density, resistivity, concentration, and other physiochemical properties.

Proper application of a dry control device can result in particulate removal efficiencies greater than 99 percent by weight for fabric filters, electrostatic precipitators, and afterburners, and up to 95 percent for cyclones.

Common wet air pollution control devices are wet electrostatic precipitators, Venturi scrubbers, and packed tower scrubbers. Collection efficiency for gases will depend on the solubility of the contaminant in the scrubbing liquid. Depending on the contaminant removed, collection efficiencies usually approach 99 percent for particles and gases.

Many metal molding and casting plants report the use of dry air pollution controls for melting furnace, dust collection, and grinding operations.

Good Housekeeping

Good housekeeping and proper equipment maintenance are necessary factors in reducing wastewater loads to treatment systems. Control of accidental spills of oils, process chemicals, and wastewater from washdown and filter cleaning or removal can aid in maintaining the segregation of wastewater streams. Curbed areas should be used to contain or control these wastes.

Leaks in pump casings, process piping, etc., should be minimized to maintain efficient water use. One particular type of leakage which may cause a water pollution problem is the contamination of noncontact cooling water by hydraulic oils, especially if this type of water is discharged without treatment.

Good housekeeping is also important in chemical, solvent, and oil storage areas to preclude a catastrophic failure situation. Storage areas should be isolated from high fire-hazard areas and arranged so that if a fire or explosion occurs, treatment facilities will not be overwhelmed nor excessive groundwater

pollution caused by large quantities of chemical-laden fire-protection water.

DEVELOPMENT OF CONTROL AND TREATMENT OPTIONS

The first part of this section described control and treatment technologies that are applicable to the metal molding and casting (foundry) category. During the development of the metal molding and casting guideline, these individual control and treatment technologies were combined into five different treatment trains, or technology options. These five options cover a broad range of costs and pollutant removal capabilities. Model technologies for BPT, BAT, NSPS, PSES, and PSNS for each subcategory were chosen from these options after detailed consideration of such factors as costs of pollutant removal, effluent reduction benefits of pollutant removal, demonstration of the technology on foundry wastewaters, air quality impacts, solid waste generation, and water and energy consumption. Some technologies not included in the options, such as second stage precipitation with sulfide, also were considered.

This second part of Section VII describes the five treatment options. Additional information is also provided on the technologies included in each option. The development of treatment effectiveness concentrations for each option is then discussed, and the calculation of the long-term average and the one-day maximum and monthly average concentrations developed for use in the establishment of effluent limitations and standards is explained.

Treatment Option 1 (Recycle and Simple Settle)

Option 1 consists of high-rate recycle of all metal molding and casting wastewater, followed by simple gravity settling of the blowdown. Figure VII-14 is a block diagram of the Option 1 treatment train. Inside the recycle loop, an appropriately sized settling device is included to prevent excessive buildup of suspended solids in the recycled water. In those process segments where available data indicate that treatable levels of oil and grease are present in the untreated wastewater, a surface skimmer removes oil that has risen to the surface of the water in the tank. All sludges produced in settling and oils collected by skimming both inside and outside of the recycle loop are removed by a licensed contractor. Acid is added prior to recycle to control scale formation inside the recycle loop for all segments except aluminum investment casting, copper investment casting, and magnesium dust collection, where caustic is added to prevent corrosion because raw wastewaters in these three process segments have a low pH.

Cooling towers are required in most copper and ferrous casting quench, mold cooling, and direct chill casting segments and plant sizes, as well as zinc mold cooling. In these processes, water is used for purposes of heat transfer from molds or castings. The temperature of the water is raised each time it is used and

the limited cooling that occurs during the course of settling and recycle is not sufficient for maintenance of high-rate recycle. Cooling towers must be employed to maintain the recycled water at the proper temperature. Cooling towers were not provided in aluminum process segments, in zinc casting quench, or smaller model plant sizes in copper casting quench (<10 employees) and ferrous casting quench (10-49 employees) because it was determined that in these segments, residence time in the settling device is sufficient to provide the necessary cooling.

Treatment of the blowdown includes simple gravity settling in either a batch or continuous mode, depending on such factors as the flow rate and solids loading of the blowdown. In the case of extremely high flows and solids loadings, a clarifier is used in place of a settling tank. Dewatering of clarifier underflow sludge for larger plant sizes is accomplished by a vacuum filter in the copper direct chill casting (>250 employees), copper mold cooling (100-249 employees), and ferrous wet sand reclamation (>250 employees), where the high volumes of sludge produced make dewatering prior to contractor removal of the dewatered sludge more economical than contractor removal of the undewatered sludge.

Additional oil skimming is included in the clarification step in those process segments where available data indicate that treatable levels of oil and grease are present.

Treatment Option 2 (Recycle, Lime and Settle)

Option 2 consists of the Option 1 treatment train with the addition of lime and polymer to the blowdown prior to settling. These chemicals facilitate the precipitation and flocculation of dissolved metals, which would not be removed by simple settling. Oil skimming is retained in all segments where skimming was present at Option 1. In addition, chemical emulsion breaking is included for the aluminum and zinc die casting segments, where emulsified oils are known to be present in the raw wastewater discharges. Option 2 also includes chemical oxidation of phenol by the addition of potassium permanganate in the following segments: aluminum and zinc die casting; aluminum, copper, and ferrous dust collection; all melting furnace scrubber segments; and ferrous wet sand reclamation. These are the 10 segments whose average raw waste contains treatable levels of phenols. Figure VII-15 is a block diagram of the Option 2 treatment train.

For the aluminum and zinc die casting segments, Option 2 consists of treatment of the entire wastewater stream by sequential emulsion breaking, oil skimming, and potassium permanganate oxidation prior to lime and polymer addition and settling. As depicted in Figure VII-16, this treatment train is followed by high-rate recycle to the process. All treatment steps are performed inside the recycle loop for these two process segments to ensure that the quality of the recycled water is sufficient for use in the process.

Treatment Option 3 (Recycle, Lime, Settle, and Filter)

Option 3 is the addition of filtration to the Option 2 treatment train to provide additional removal of solids remaining after precipitation and settling. Figure VII-17 is a block diagram of the Option 3 treatment train. Depending on the flow rate of the model plant blowdown, a cartridge filter, multimedia filter or pressure filter is employed. The flow ranges in which each type of filter would be used were determined by performing an economic analysis. The annualized cost of purchasing and operating each type of filter was determined at each flow rate. Breakpoint flows, where one type of filter becomes less expensive to operate, were obtained at 4 gpm and at 125 gpm. As a result of this analysis, cartridge filters are used on wastewater flows up to 4 gpm, multimedia filters on flows from 4 gpm to 125 gpm, and pressure filters on flows greater than 125 gpm.

Option 3 for the aluminum die casting and zinc die casting process segments consists of Option 2 treatment inside the recycle loop, with filtration performed only on the blowdown prior to discharge. This arrangement is shown in Figure VII-18.

Treatment Option 4

At Option 4, the final effluent from the Option 3 treatment train is subjected to carbon adsorption treatment for removal of residual organic pollutants. The Option 4 treatment train for all process segments except aluminum die casting and zinc die casting is presented in Figure VII-19. The Option 4 treatment train for the two die casting segments is presented in Figure VII-20.

Treatment Option 5

Option 5 is similar to Option 1 but complete recycle is achieved and thus there is no blowdown treatment. Complete recycle is maintained using the same techniques used to maintain high rate recycle at the other options: settling (and surface skimming in the same process segments as Option 1), pH adjustment as necessary to prevent scaling or corrosion, and cooling towers where required. Figure VII-21 presents the Option 2 treatment train.

Additional Options Considered

In addition to these five options, two options were considered which provide less overall pollutant removal than Options 1 and 2. The first is simple settling and discharge of the full waste stream generated, with no recycle. The second is chemical precipitation, settling, and discharge of the full waste stream generated, with no recycle. These options are essentially Options 1 and 2 without recycle. These options were only considered when the Agency believed that the cost of Option 1 treatment might cause significant adverse economic impacts and where the costs of these non-recycle options were lower than the

costs associated with Option 1. They were not given serious consideration for the final regulation because the Economic Impact Analysis did not project significant adverse impacts.

The Agency also considered including in the lime and settle treatment train (Options 2, 3, and 4) enhanced metals removal prior to filtration. This is achieved through the addition of chemicals to effect metal sulfide or metal carbonate precipitation. The Agency did not select sulfide or carbonate precipitation as the technology basis for the final regulation. The Agency determined that filtration is an effective and less costly control option for enhanced metals removal than second-stage precipitation and clarification. Cost and treatment effectiveness data on carbonate precipitation and on sulfide precipitation may be found in the public record for this rulemaking.

DEVELOPMENT OF TREATMENT EFFECTIVENESS VALUES

Treatment effectiveness values for the five treatment options as applied to metal molding and casting wastewaters are based wherever possible on actual performance data from metal molding and casting plants. In some cases, where such performance data are not available, performance data from other similar industrial categories were used after a determination was made that these performance data are applicable to metal molding and casting industry wastewaters. In this section, the source of the treatment effectiveness values for each pollutant or class of pollutants is discussed separately for each treatment option.

Treatment Option 1

Option 1 treated effluent concentrations are based for the most part on actual performance data from metal molding and casting plants. Because Option 1 was not selected as the basis for any limitations or guidelines applicable to the metal molding and casting category, the development of specific limitations values such as a daily maximum or monthly average was not necessary. The derivation of Option 1 treatment effectiveness concentrations that were used in benefits calculations is discussed below. Details of these derivations may be found in the record.

Total Suspended Solids (TSS): Option 1 treated effluent TSS concentrations were assumed, for purposes of calculating waste loads and pollutant removals, to be either 20 mg/l or 30 mg/l for each process segment, depending on the solids loading of the raw waste. If the concentration of total suspended solids in the raw waste was 100 mg/l or less, the effluent TSS concentrations was assumed to be 20 mg/l. Similarly, if the total suspended solids in the raw waste was greater than 100 mg/l, the effluent TSS concentration was assumed to be 30 mg/l. These assumptions were based on TSS concentrations observed at metal molding and casting plants and at plants in other industrial categories that have simple settling.

Metals: The simple settle treatment effectiveness value for each metal was derived by assuming that 1 percent of the metal present in the raw waste was in dissolved form, and would be concentrated in the recycle loop and remain untreated by simple settle technology. The remaining metal was assumed to be particulate and undergo a similar percent reduction as achieved for TSS.

Oil and Grease: The metal molding and casting simple settle data base was reviewed for oil and grease data. As a result of this review, an average value of 5 mg/l as chosen as the long-term Option 1 treatment effectiveness value for oil and grease. This value is well-supported by oil and grease removals currently demonstrated in the foundries category.

Toxic Organic Pollutants: Concentrations of toxic organics and 4-AAP phenols in Option 1 effluents were calculated using removal rates presented in Exhibit 14 of the report entitled "Control of Toxic Organic Pollutants." That report can be found in Section 22.12 of the record for this rulemaking.

Treatment Option 2

At proposal, the Agency used the Combined Metals Data Base (CMDB) as the basis for establishing proposed treatment effectiveness concentrations reflective of proper lime and settle treatment. The CMDB is a data base from well-operated lime and settle treatment systems employed by plants in various metals industries that has been used to establish lime and settle treatment effectiveness for several industrial point source categories. Numerous commenters criticized the Agency's use of the Combined Metals Data Base, stating that limitations should be based on data from treatment systems applied to metal molding and casting wastewaters.

In response to these comments, the Agency developed a metal molding and casting treatment effectiveness data base for use in establishing treatment effectiveness values reflective of high rate recycle and lime and settle treatment (Option 2) as applied to metal molding and casting wastewaters. The data base was assembled from two sources: (1) data from EPA sampling efforts at plants employing well-operated lime and settle systems treating metal molding and casting wastewaters, and (2) discharge monitoring reports (DMRs) from metal molding and casting facilities.

Two levels of screening were performed to ensure that all data included in the metal molding and casting data base were derived from well-operated lime and settle treatment. The first level was intended to confirm that the plant's treatment system was indeed lime and settle, and that it was properly operated. At this level, each plant was considered separately; if it could not be confirmed that data from the plant were derived from well-operated lime and settle treatment, then none of the data from that plant were considered further. The second level of screening focused on individual data points rather than plant

practices or characteristics. In this level, all data points were subjected to a second set of screening criteria intended to eliminate data representing plant upsets, excursions, or reporting errors. These two levels of screening are explained in detail below.

In the first level, the treatment system at each plant was first compared with a set of criteria that indicate conditions necessary for the proper operation of lime and settle treatment. If the plant did not meet these screening criteria, then none of the data from that plant were considered further for inclusion in the metal molding and casting data base. These criteria are listed below:

1. The plant must have hydroxide addition for metals precipitation followed by simple settling.

2. More than 50 percent of the wastewater entering the treatment system must be metal molding and casting process wastewater.

3. Not more than 25 percent of the total flow to the treatment system may be noncontact cooling water.

4. Sufficient chemical addition must be performed to facilitate metals precipitation. The pH must be consistently maintained between 7.0 and 10.0 standard units.

5. Sedimentation units must be effective; this means that the average effluent TSS levels must be maintained below 50.0 mg/l.

6. If a plant did not practice any degree of recycle, or had unrepresentative, low raw waste loads, then the data from that plant were not included in the data base.

7. Plant data were eliminated wherever improper treatment system operation was identified. This category includes plants where problems were noted during sampling, or where plant-supplied records from the wastewater treatment plant show that there were extended periods of upset during the times when data were obtained.

A number of plant data sets were excluded from the final metal molding and casting data base as a result of this review. Section 22.58 of the record for this rulemaking includes a list of all the plant data sets reviewed, and identifies those excluded from further analysis for failure to meet one or more of the screening criteria, as well as those retained and subjected to further review and analysis.

The cases where a plant appeared to have well-operated lime and

settle treatment, but the only data available for that plant were DMR data, a further effort was made to confirm the data by comparing the long-term DMR data with EPA sampling data from the same plant. Long-term DMR data were considered confirmed in cases where (1) EPA short-term sampling data were available for the same plant and, preferably, the same period of time was represented by both EPA and DMR data, and (2) where the short-term EPA data were consistent with the long-term DMR data.

There were four plants with lime and settle treatment that appeared to be well-operated for which usable DMR data were available, but not confirmed with EPA data. After the February 1985 Notice of Data Availability, the Agency sent letters to these four plants soliciting additional data and information designed to enable the Agency to determine whether the data reflected proper operation of the treatment system, and whether the plant's wastewaters were characteristic of metal molding and casting wastewaters after high rate recycle. To this end, EPA requested that each plant submit data from three days of sampling and analysis of its treatment system influent and effluent.

The data made available by these plants were nc collected by personnel directly under the supervision of the Agency. However, the Agency's requests included detailed descriptions of the data and documentation required, as well as detailed procedures by which it was to be gathered. Further, the metal molding and casting plant personnel who gathered the data were contacted by the Agency and the procedures were clarified and modified as necessary during the sampling effort to ensure that the most representative data were obtained.

Based upon the data and documentation received, the Agency determined that DMR data for three of the four plants could be considered confirmed and used in the development of effluent limitations and standards. These additional sampling data gathered to confirm the DMR data were also included in the data base and considered equivalent to the short-term EPA sampling data from other plants. Data from the fourth plant could not be used because the influent to the plant's treatment system contained excessive quantities of noncontact cooling water commingled with process wastewater.

The result of this first level of screening and review was a data base consisting of data from three sources: (1) EPA sampling data, (2) confirmed DMR data, and (3) self-sampling data gathered and submitted by the three plants described above. All of these data had been determined to originate from plants with well-operated lime and settle treatment.

The second level of screening focused on individual data points and was intended to eliminate points representing plant upsets, excursions, or reporting errors. During this screening, all data were subjected to three criteria involving (1) treatment system pH, (2) effluent levels of suspended solids, and (3) influent pollutant levels. These criteria are explained in detail below.

The pH range of 7.0-10.0 was chosen to ensure that dissolved metals of concern are precipitated from solution as hydroxides. Both theoretical pH versus solubility relationships and data for metals-bearing wastewaters confirm that pH must be controlled to ensure precipitation and subsequent removal with TSS. Based on the open literature and on treatability studies, the optimum pH range in which to operate lime and settle technology for optimum precipitation of the metals of concern in this category is believed to be pH 9.0 to 10.0. However, the optimum pH range can vary, depending on the specific metals present and their solubilities. Therefore, a relatively broad pH range has been used to cover most metals of concern, and to account for a variety of raw wastewater matrices and treatment system operating characteristics present in the category.

The raw wastewater matrices for the metal molding and casting industry and other related metals industries exhibit settleability characteristics which allow for rapid separation of solids to low effluent TSS concentrations (less than 50 mg/l). This fact is supported by treatability studies and by DMR data from the metal molding and casting industry. Treatment systems which exhibit long-term average TSS concentrations higher than 50 mg/l can nearly always be found to have poor control of solids or to be overloaded. Similarly, individual TSS effluent concentrations in excess of 50 mg/l are symptomatic of upset conditions, such as hydraulic overload by slugs of process wastewater or stormwater. In addition, an examination of the metal molding and casting data base confirms that optimum removal of metals and other pollutants is achieved when TSS is maintained below 50 mg/l. Therefore, the Agency has utilized a long-term average TSS concentration of 50 mg/l as a screening criterion to assist in identifying and excluding from the treatment effectiveness data base plants that are poorly designed or operated. This criterion also is used to identify individual data points within a plant's data set which represent short-term operational problems. In cases where excursions occur, they often result in treated effluent concentrations approaching or exceeding raw waste concentrations, in some cases for extended periods of time, until corrective measures are taken or the contributing circum stances cease to exist. Accordingly, data for these periods were not considered in the development of effluent limitations and standards.

Effluent data were deleted where influent data were missing and where corresponding influent values were less than 0.10 mg/l. This criterion was used to ensure that pollutant removals across treatment could be identified and that removals actually were occurring.

Excursions in data can also occur in cases where documentation was not available from plants or could not be secured by EPA to identify the contributing circumstances. Examples of such circumstances are laboratory analytical and/or reporting errors, in-plant spills or leaks, collection of unrepresentative samples,

equipment malfunctions. Therefore, selected data points were deleted based on engineering judgment where values reported obviously were aberrant but no other documentation were available or could be secured. In most cases these values also were clearly statistical outliers compared to the balance of the data sets being considered.

The data base remaining after the second level of screening consisted of long-term DMR and short-term sampling data from plants with well-operated lime and settle treatment, on days where no plant upsets were occurring. This is the data base used in the development of final effluent limitations and standards. The derivation of the limitations guidelines and standards is described in the following sections.

Analysis of the Data Base

Long-term average, maximum monthly average, and maximum daily concentration limitations were calculated from the lime and settle treatment effectiveness data for use in those segments where Option 2 was chosen as the technology basis for regulations. The basic assumption underlying the determination of these concentrations is that the data for a particular pollutant are lognormally distributed by plant. The lognormal distribution has been found to provide a satisfactory fit to effluent data in a wide range of industrial categories for a variety of pollutants and usually provides a good approximation for the distribution of treated effluent pollutant concentration measurements.

Goodness-of-fit tests performed on the DMR data from each plant can be found in Section 22.48 of the public record for this rulemaking. The test results indicate that the use of the lognormal distribution is consistent with these data. In a majority of cases, the lognormal distribution was not rejected by the Studentized Range Test. In addition, in almost all cases, the data display the general lognormal shape which is characterized by the mean being larger than the median and by positive skewness. Goodness-of-fit tests were not applied to the EPA metal molding and casting data because of the small sample sizes per plant. Such data do not, in most cases, reject the lognormal since the small data sets do not have much statistical power to discern the difference between the lognormal and other distributional shapes.

The results of the goodness-of-fit tests, considered in light of the prior successful use of the lognormal distribution to model effluent data in other industrial categories, lead the Agency to conclude that the lognormal distribution provides a satisfactory fit to the metal molding and casting data.

In the case of the metal molding and casting data, a generalized form of the lognormal distribution, known as the delta lognormal (DLN) distribution, was used to model the data. This is the same approach followed in the analysis of the combined metals data

base (CMDB). The DLN models the data as a mixture of zeros and values above zero that are lognormally distributed. This distribution is described in Chapter 9 of The Lognormal Distribution, by Aitchison and Brown, Cambridge University Press, 1963. The DLN was used because of the presence of observations below the detection limit in data from some plants for certain pollutants. Owen, W. J. and DeRouen, T. A. (1980), "Estimation of the Mean for Lognormal Data Containing Zeros and Left Censored Values," Biometrics 36, 707-719, recommended that when data contain below detection limit values, the estimate of the mean is most stable and has the lowest mean square error when the below detection limit values are set to zero and the DLN distribution is used to model the data. In cases where no observations below the detection limit are present, the delta lognormal is equivalent to the usual lognormal distribution.

The delta lognormal distribution (or delta distribution) is a generalized form of the usual two parameter (μ , σ^2) lognormal distribution in which a proportion, , of the observations may be zeroes and the non-zero values follow a lognormal distribution with parameters μ and σ^2, i.e., the logmean and logvariance of the non-zero observations, respectively. If the random variable X, representing daily pollution concentration measurements, follows a delta distribution with parameters δ , μ , and σ^2 , denoted by $X \sim \Delta(\delta, \mu, \sigma^2)$, the mean of the distribution, denoted by E(X), is given by

$$E(X) = (1 - \delta) \exp(\mu + \sigma^2/2),$$

where exp is e, the base of the natural logarithms. The quantile of order q for the delta distribution is

where

$$X_q = \begin{cases} 0 \text{ if } q < \delta \\ \exp(\mu + v_{q'}\sigma) \text{ if } q \geq \delta \end{cases}$$

and

$$q' = \frac{q - \delta}{1 - \delta}$$

$v_{q'}$ = quantile or order q' of the normal distribution with mean zero and variance one.

For q = .99, Xq is the 99th percentile of the delta distribution. Estimates of the 99th percentile were used as the basis for daily maximum treatment effectiveness concentrations.

The data from each plant for each pollutant were used to estimate , δ , μ and σ^2 for each plant as follows: Let X1, X2, . . ., Xn, denote the n_1 observations from a particular plant that are greater than the detection limit. Let n_0 denote the number of observations that are less than or equal to the detection limit.

The total number of observations is thus $n = n_0 + n_1$. Then let $Y_i = \ln X_i$, $i = 1, \ldots, n_1$ denote the natural logarithms of the X_i's. Then δ, μ, and σ^2 are estimated for each plant by

$$\hat{\delta} = n_0/n,$$

$$\hat{\mu} = \sum_{1}^{n_1} Y_i/n_1,$$

$$\hat{\sigma}^2 = \sum_{1}^{n_1} (Y_i - \hat{\mu})^2/(n_1 - 1).$$

In the development of concentrations for use in calculating mass limitations, the logmean, logvariance, and delta for the combinations of EPA and DMR data were determined by taking the averages of the logmean, logvariance, and delta across plants. There is substantial theoretical support for this approach given by W. G. Cochran, Sampling Techniques, 1963, 2nd edition, Wiley & Sons, Theorem 5.1, page 89. As a practical matter the use of sample size weighted averages as an alternative would be equivalent to ignoring the information from the EPA-sampled plants. This method of averaging across plants for each pollutant gives equal consideration to the information from each plant.

Thus, denoting the average δ, μ, and σ^2 across plants as $\bar{\delta}$, $\bar{\mu}$, and $\bar{\sigma}^2$, respectively, the estimates of the overall mean and the 99 percentile used to determine treatment effectiveness values are

$$E(\overline{X}) = (1 - \bar{\delta}) \exp(\bar{\mu} + \bar{\sigma}^2/2)$$

and

$$\overline{X}_{.99} = \exp(\bar{\mu} + \nu_{q'}\, \bar{\sigma})$$

where $$q' = (.99 - \bar{\delta})/(1 - \bar{\delta})$$

and

$\nu_{q'}$ = quantile or order q' of the normal (0, 1) distribution.

Monthly limitations treatment effectiveness values are based on the distribution of the average 10 daily samples. The approach used to develop the monthly values assumes that the 10 daily samples are drawn from the same distribution used to determine the daily limitations, i.e., the delta lognormal distribution. The distribution of the average of the 10 daily values is approximated by another delta lognormal distribution. The parameters of the distribution of the average of 10 samples are determined by the parameters of the underlying distribution of daily values as shown in Section 22.58 of the public record of this rulemaking. This approach has been used previously for the determination of 10 day average concentrations presented in the February, 1985 Notice of Availability for the metal molding and casting industry, the 10 day average concentrations for the metals processing industries based on the combined metals data base (described in "A Statistical Analysis of the Combined Metals Data Base," November, 1982, and "Revisions to Data and Analysis of the Combined Metals Data Base," October, 1983) and for the electroplating industry (see "Development Document for Existing Source Pretreatment Standards for the Electroplating Point Source Category," EPA 440/1-79-003, U.S. Environmental Protection Agency, Washington, D.C., August, 1979). Although this approximation is not theoretically correct, there is empirical evidence that it is adequate and a computer simulation study documented in the 1979 Electroplating Development document cited above, demonstrated the adequacy of this approximation.

The parameter values for the distribution of X_{10}, the mean of 10 daily measurements, are as follows. The details of their derivation are provided in Section 22.58 of the public record for this rulemaking.

If the daily pollutant measurements $X_i \sim \Delta(\delta, \mu, \sigma^2)$, where $\sim\Delta(\delta, \mu, \sigma^2)$ denotes delta lognormally distributed with probability of a zero observation δ, logmean μ, and logvariance σ^2, then $\bar{X}_n \sim \Delta(\delta_n, \mu_n, \sigma^2_n)$, where $n = 10$ in this case, then the parameters δ_n, μ_n, and σ^2_n in terms of the parameters δ, μ, and σ^2, are:

$$\delta_n = \delta^n$$

$$\mu_n = \mu + \frac{1}{2}\sigma^2 - \frac{1}{2}\ln\left\{(1-\delta^n)\left[\frac{e^{\sigma^2}}{n(1-\delta)} + \frac{n-1}{n}\right]\right\} + \ln\left(\frac{1-\delta}{1-\delta^n}\right)$$

$$\sigma^2_n = \ln\left\{(1-\delta^n)\left[\frac{e^{\sigma^2}}{n(1-\delta)} + \frac{n-1}{n}\right]\right\} .$$

Substituting estimates of the daily δ, μ, and σ^2 in the above formulas for δ_n, μ_n, and σ_n results in estimated values denoted by , , and , respectively. The 95th percentile of Xn can then be estimated by

$$\exp(\hat{\mu}_n + \nu_{q'_n}\,\hat{\sigma}_n)$$

where $q'_n = \frac{.95-\delta_n}{1-\delta_n}$, and $\nu_{q'_n}$ is the q_n quantile of a standard normal (0,1) distribution. The mean or expected value of the distribution of X_n is equivalent to the mean of the distribution of daily measurements. The details of the application of these formulas to the metal molding and casting data are described in Sections 22.48 and 22.58 of the public record of this rulemaking.

Metals: The results of performing the calculations outlined above on the EPA and confirmed DMR data to determine Option 2 treated effluent concentrations are shown in Table VII-5. The results for individual plant data sets for each pollutant are presented in Tables VII-6 through VII-11. Details of the calculations supporting these concentrations are included in Sections 22.48 and 22.58 of the public record for this rulemaking.

As presented on Table VII-5, the Agency calculated treatment effectiveness concentrations based on data from ferrous plants only, nonferrous plants only, and the combined ferrous and nonferrous data sets. The results of the analyses performed on the ferrous and nonferrous data as unique sets and as a combined data set showed that, in general, pollutants in ferrous and nonferrous wastewater are treatable to the same concentrations. Therefore, EPA is basing the final treatment effectiveness concentrations on the analysis of the combined set of ferrous and nonferrous, EPA and confirmed DMR data, with the exceptions noted below:

The long-term mean treated effluent concentration for copper, based on the combined EPA and confirmed DMR data base, is 0.065 mg/l. This concentration is consistently achieved by lime and settle treatment systems treating ferrous wastewaters. For this reason, EPA is establishing the long-term mean copper concentration for ferrous plants at 0.065 mg/l. In contrast, the one copper casting plant in the EPA and confirmed DMR data set had a long-term mean treated effluent copper concentration of 0.17 mg/l. Thus the limited data available on the performance of well-designed and well-operated lime and settle treatment systems treating wastewaters generated by nonferrous plants indicate that nonferrous plants may not be able to achieve consistently concentrations of 0.065 mg/l using lime and settle treatment technology. For this reason, the long-term mean copper concentration for nonferrous plants is being set at 0.17 mg/l.

The long-term mean treated effluent concentration for zinc based on the combined effluent concentration data set is 0.27 mg/l. This concentration is consistently achieved by lime and settle treatment systems at the nonferrous plants. For this reason, EPA is establishing the long-term mean zinc concentration for nonferrous plants at 0.27 mg/l. The long-term mean treated effluent zinc concentration based on ferrous plant data only is 0.40 mg/l. Based on these data, the long-term mean of 0.27 mg/l may not be consistently achieved by ferrous subcategory plants. Thus, to ensure that ferrous plants employing lime and settle treatment could achieve the treatment effectiveness concentrations for zinc, EPA established the long-term mean for zinc at 0.40 mg/l.

Table VII-12 presents a tabular summary of the long-term average, maximum monthly average, and maximum day treatment effectiveness concentrations for lime and settle treatment.

TSS, Oil and Grease, Total Phenol: The Agency determined treatment effectiveness concentrations for TSS, oil and grease, and total phenol using the same EPA and confirmed DMR data base described above. These parameters measure specific bulk properties of a wastewater matrix. However, based on available data, EPA has determined that the treatability of these parameters is not expected to vary significantly within subcategories of the metal molding and casting category.

The long-term average treated effluent concentration of TSS for both ferrous and nonferrous plants is 9 mg/l. The long-term average concentration for ferrous plants is 10 mg/l. Based on the available data from two nonferrous plants with well-operated lime and settle treatment, the long-term average concentration for nonferrous plants is 5 mg/l. Three of the six ferrous plants in the data base have long-term average TSS concentrations of 10 mg/l, and two others have long-term averages of 13 mg/l and 20 mg/l. On the basis of these observations, EPA has determined that a long-term average concentration of 10 mg/l for TSS is more appropriate and consistently achievable by lime and settle technology for both ferrous and nonferrous subcategories.

The long-term average treated effluent concentration of oil and grease at ferrous and nonferrous plants in the EPA and confirmed DMR data base is 5 mg/l. This average is based on the EPA and confirmed DMR oil and grease data from the nine plants for which such data were available. Five of these nine plants achieve the maximum day limitation based on the long-term mean concentration of 5 mg/l. This includes an aluminum and zinc die casting plant which has high concentrations of emulsified oil and grease in raw wastewaters.

The long-term average total phenol treated effluent concentration for the ferrous and nonferrous subcategories is 0.20 mg/l based on incidental removal through lime and settle systems. Available data indicate that many plants in this industry will be able to achieve the total phenol limitations and standards without

applying chemical oxidation. Three of the five plants from which EPA and DMR phenol data were used in developing limitations achieve the long-term average and maximum day concentrations for phenol. In those cases where the total phenol limitations and standards cannot be met using recycle and lime and settle treatment alone, compliance can be attained through the use of chemical oxidation. Chemical oxidation by addition of potassium permanganate has been included as part of the model treatment technology for all 10 process segments where the average phenol concentration in the raw waste was at a treatable level.

The conclusion that metal molding and casting plants will be able to achieve the total phenol limitations and standards is based on data available from two independent bench-scale studies performed on ferrous foundry wastewaters. In one study, total phenol concentrations were reduced by 97.6 percent (from 1.1 mg/l to 0.026 mg/l) using potassium permanganate oxidation followed by lime and settle treatment. In the other study, phenol concentrations were reduced by greater than 92 percent (from 0.123 mg/l to <0.01 mg/l) using potassium permanganate oxidation. Details of these studies may be found in Section 22.57 and 22.60 of the record for this rulemaking.

The bench-scale tests were intended to demonstrate that chemical oxidation technology is effective in the removal of phenol from metal molding and casting wastewater; data from these tests are not intended to replace data from actual foundry wastewater treatment systems. While every attempt was made to approximate conditions in a foundry treatment system, including the use of foundry wastewater in the tests, the smaller volume of wastewater used and the laboratory setting allowed for more carefully controlled conditions than would be possible in an actual foundry treatment system. It is possible that the percent reductions achieved in the laboratory may be somewhat higher than those achievable during actual chemical oxidation or treatment. Thus, the concentration data that resulted from the studies were not used as the basis for treatment effectiveness values; rather, actual foundry sampling data were used. Nonetheless, the achievability of the treatment effectiveness concentrations for phenol is strongly supported by the bench-scale study results.

Toxic Organic Pollutants: In addition to toxic metals, TSS, oil and grease, and total phenol, toxic organic pollutants are being regulated in 22 process segments. These toxic organics are being treated as a single pollutant parameter, total toxic organics or TTO. For each process segment where it is being regulated, TTO is defined separately as the list of all toxic organic pollutants that were found in treatable concentrations in the raw wastewaters of that segment. The TTO concentration limit for each segment is then defined as the sum of the treatment effectiveness concentrations for all pollutants on the list.

Toxic organic pollutant data were analyzed for each process segment. Different organic pollutants were found at varying concentrations in the raw wastewaters of each of the 22 process

segments; the greatest number of pollutants and the highest concentrations were found in the die casting, melting furnace scrubber, and dust collection scrubber process segments.

To develop treatment effectiveness values for toxic organic pollutants, the Agency reviewed treated effluent data for four plants: (1) An aluminum and zinc die casting plant with a central treatment system including emulsion breaking, oil skimming, and lime and settle treatment operated on a batch basis. (2) A ferrous plant with high rate recycle and a central lime and settle treatment system with oil skimming. This treatment system receives water from melting furnace scrubber, slag quench, and dust collection processes. (3) An aluminum die casting plant with recycle and central treatment including emulsion breaking, oil skimming, and alum and settle. This treatment system receives water from die casting, casting quench, and melting furnace scrubber processes. (4) A ferrous plant with treatment of dust collection process wastewaters. Treatment consists of oil skimming and simple settling followed by high rate recycle. Toxic pollutant sampling data for the two plants that did not have lime addition were used in this analysis because they employed mechanical oil and grease removal, in one case preceded by emulsion breaking, and exhibited effective removal of toxic organic pollutants.

For each toxic organic pollutant, the treated effluent concentrations from these four plants were averaged, giving equal weight to each plant, to obtain the Option 2 treatment effectiveness concentration for that pollutant. Individual treatment effectiveness values calculated in this manner range from 0.01 mg/l to 0.078 mg/l. It is noteworthy that this range of average effluent concentrations was achieved by the die casting plants, one of which had very high raw waste load concentrations of toxic organic pollutants. This demonstrates the achievability of the TTO limitation by plants with high raw waste loads.

Oil removal is an effective treatment for priority toxic organic pollutants because priority organics tend to be much more soluble in organic solvents than in water. Thus, they are much more concentrated in the oil phase that is skimmed than in the treated wastewater. The ratio of solubilities of a compound in oil and water phases is called the partition coefficient. The logarithm of the partition coefficients for 34 priority organic pollutants in octanol and water are:

Organic Priority Pollutant	Log Octanol/Water Partition Coefficient
1. acenaphthene	4.33
4. benzene	2.13
7. chlorobenzene	2.84
11. 1,1,1-trichloroethane	2.17
13. 1,1-dichloroethane	1.79
15. 1,1,2,2-tetrachloroethane	2.56
18. bis(2-chloroethyl) ether	1.58

23.	chloroform	1.97
29.	dichloroethylene	1.48
38.	ethylbenzene	3.15
39.	fluoranthene	5.33
44.	methylene chloride	1.25
55.	naphthalene	3.37
64.	pentachlorophenol	5.01
65.	phenol	1.48
66.	bis(2-ethylhexyl) phthalate	8.73
67.	butyl benzyl phthalate	5.80
68.	di-n-butyl phthalate	5.20
70.	diethyl phthalate	5.00
72.	benzo(a)anthracene	5.61
73.	benzo(a)pyrene	6.04
74.	3,4-benzofluoranthene	6.57
75.	benzo(k)fluoranthene	6.84
76.	chrysene	5.61
77.	acenaphthylene	4.07
78.	anthracene	4.45
79.	benzo(ghi)perylene	7.23

Organic Priority Pollutant		Log Octanol/Water Partition Coefficient
80.	fluorene	4.18
81.	phenanthrene	4.46
82.	dibenzo(a,h)anthracene	5.97
83.	indeno(1,2,3-c,d)pyrene	7.66
84.	pyrene	5.32
85.	tetrachloroethylene	2.88
86.	toluene	2.69

Treatability concentrations for organic pollutants that were not detected in the raw wastewaters of the four metal molding and casting plants for which data were available were estimated by dividing all pollutants for which data were available into groups of pollutants with similar octanol/water partition coefficients. Toxic organic pollutants which had been detected in raw wastewaters of metal molding and casting plants at treatable concentrations, but for which treated effluent data were not available, were assigned to one of the groups depending on their partition coefficient; these pollutants were assumed to have a treatability concentration equal to the mean effluent concentra tion of all pollutants in that group. For some pollutants, neither treated effluent sampling data nor literature values for partition coefficients were available. In such cases, estimates were calculated using a parallel method based on the compound's solubility in water.

The long-term average effluent TTO concentration for each process segment was determined by summing the treatment effectiveness concentrations for each of the pollutants detected in treatable concentrations in the raw waste of that process segment.

The statistically determined variability factors used to

calculate the maximum monthly average and maximum one-day limitations for oil and grease also were applied to the long-term average TTO concentrations for each process segment to calculate the maximum monthly average and maximum one-day TTO limitations. Appendix A of this document includes a list of toxic organic pollutants comprising the TTO limitations for each process segment where TTO is regulated.

Table VII-13 lists all of the toxic organic pollutants that are constituents of TTO in any process segment where TTO is regulated. Treatment effectiveness values are also listed for each pollutant.

The Agency has revised its approach to calculating TTO treatment effectiveness concentrations. In the past, EPA has calculated treated effluent TTO concentrations for those process segments where TTO was regulated based upon the average percent removal of TTO in the model technology. The average percent removal was applied to the average concentration of TTO observed in the raw wastewater of the respective process segment to determine a treated effluent concentration.

Upon re-evaluating the raw waste data base in response to public comments, EPA found that average concentrations of organics had changed and that the TTO treated effluent concentrations calculated based on applying a percent removal to average concentrations were no longer valid. As previously described, a review of available TTO treatability data for treatment systems consisting of oil removal followed by chemical addition and settling indicated that priority organics were treatable to discrete treatment effectiveness concentrations that were independent of influent concentration. This finding is in keeping with the removal mechanism of organic priority pollutants. Organic priority pollutants are much more soluble in the oil and grease phase than the water phase of a wastewater matrix. Effective removal of the oil and grease phase has been shown to effectively remove organic priority pollutants. Data in the metal molding and casting EPA and confirmed DMR data base show that oil and grease can be treated to 5 mg/l using demonstrated techniques such as oil skimming and emulsion breaking. Because the bulk parameter oil and grease can be treated to a discrete limit (5 mg/l), and the mechanism for organic priority pollutant removal is oil and grease removal, the finding that priority organic pollutants are reduced to discrete treatment effectiveness concentrations is as expected. Therefore, these discrete treatment effectiveness concentrations have been used to establish TTO treatment effectiveness concentrations.

Treatment Option 3

Option 3 consists of Option 2 (recycle, lime and settle, plus oil removal and chemical oxidation where necessary) with the addition of filtration after the settling step. Treatment effectiveness concentrations for Option 3 are presented in Table VII-14. The

development of treatment effectiveness concentrations for Option 3 is described below.

Metals: Filtration is demonstrated in the metal molding and casting industry. However, there are insufficient data from which to develop lime and settle plus filtration treatment effectiveness concentrations. EPA has identified three plants in the metal molding and casting industry employing effluent filtration for which treatment effectiveness data are available. One filtration system is operated in conjunction with a biological treatment system; filtered effluent from the biological system is recycled back to the process operations. A second filtration system is employed to treat the blowdown from a recycle system employing settling only. The third treats the effluent from a lime and settle system treating wastewater discharged from a ferrous foundry on a once-through basis. None of these systems is identical to the model technology that describes technology Option 3-recycle, lime and settle, plus filtration.

Concentrations of lead and zinc in the treated effluent from a lime and settle plus filtration treatment system are based on the long-term mean lime and settle treatment effectiveness concentrations for the metal molding and casting industry, reduced by one-third. The one-third reduction from lime and settle values was based on an analysis performed on the CMDB lime and settle data and on lime, settle, and filter data from plants in several metals categories. In the analysis, lime and settle effluent values were compared with lime, settle, and filter effluent values to determine the percent reduction of metals achieved by filtration. The analysis showed that, on average, the effluent concentrations from filtration were approximately one-third lower than those from the lime and settle systems alone. This analysis is described in detail in Section VII of the proposed development document for this rulemaking.

To determine whether this one-third reduction would also apply to metal molding and casting wastewaters, the Agency compared the lime and settle effluent data obtained from metal molding and casting plants with the characteristics of the lime and settle effluent used in the analysis. Table VII-15 presents such a comparison. This table demonstrates that the lime and settle zinc and lead effluent concentrations of metal molding and casting and combined metals data base wastewaters are similar and thus the one-third pollutant reduction determined for CMDB wastewater may also be expected for zinc and lead in metal molding and casting wastewater.

Results of an EPA pilot plant study at a ferrous plant (Tyler Pipe Industries, Inc., Tyler, Texas) showed that filtration reduced the concentrations of lead and zinc by about 67 percent below that achieved by a lime and settle treatment system. These pilot data support the achievability of the one-third reduction in metals concentrations chosen for this regulation. However, the metals and TSS concentrations from the lime and settle

treatment system operated as part of the pilot unit were higher than those that generally characterize the effluent concentrations from lime and settle systems employed in the metal molding and casting industry. Therefore, it is quite likely that the pilot filters removed metals to a greater degree than if lower concentrations of metals and TSS, such as those expected to result from the use of well-operated lime and settle systems in the metal molding and casting category, had been treated in the pilot filtration unit. For this reason, rather than assuming that 67 percent removal of metals will occur after the application of filtration technology as demonstrated on the pilot level, the Agency based lime, settle, and filter treatment effectiveness concentrations on a 33 percent removal of lead and zinc, as has been demonstrated at three full scale treatment systems in other, similar industries.

The one-third reduction does not apply to copper. Further reduction of the long-term treated effluent copper concentrations below the lime and settle treatment effectiveness concentrations of 0.065 mg/l (ferrous subcategory) and 0.17 mg/l (nonferrous subcategories) using filters has not been demonstrated by data available from other industries. Therefore, the long-term treated effluent copper concentrations for ferrous and nonferrous wastewater treated by lime, settle, and filtration is being maintained equal to the lime and settle treatment effectiveness concentrations.

The maximum monthly and maximum day effluent limitations for filtration are based on the same variability factors developed for lime and settle treatment. However, the performance of filtration is expected to reduce the treated effluent variability from that demonstrated by lime and settle treatment. This is expected because of the observation that increases in TSS concentrations in the influent to filters do not affect significantly the treated effluent concentrations expected. In the event of markedly higher influent TSS concentrations for extended periods of time, the duration of the filter operation cycle decreases because solids build up more rapidly than at lower influent concentrations, thus requiring more frequent backwashing. However, treated effluent concentrations remain approximately the same as long as the normal range of pressure drop across the filter is observed in order to prevent washout ("breakthrough") of previously filtered solids into the effluent stream. Therefore, even though more stable (i.e., lower variability) effluent quality is expected from filters, the Agency has chosen the more conservative and numerically higher variability factors used for lime and settle as the basis for variability of lime, settle, and filter treated effluent concentrations.

TSS, Oil and Grease, Total Phenol: The long-term average treated effluent concentration for TSS is 2.6 mg/l. This concentration is based on data from several metals industry plants presented in Table VII-16. The 10-day average concentration calculated based on this data is 4.33 mg/l, the 30-day average is 3.36 mg/l, and

the one-day maximum is 8.88 mg/l. These calculated values more then amply support the classic 30-day and one-day values of 10 mg/l and 15 mg/l, respectively, which are used for LS&F. Some incidental removal of oil and grease, total phenol, and toxic organics may be achieved in a filtration system. However, significant reductions in treated effluent concentrations below those achieved by lime and settle is not expected. Therefore, no further reductions in oil and grease, and total phenol beyond those achieved by lime and settle are being assumed for filtration.

Treatment Option 4

In treatment Option 4, the effluent from the Option 3 treatment train is treated with activated carbon. Effluent concentrations for this option were calculated for purposes of cost and benefit analyses. However, Option 4 was not selected as the technology basis for any of the limitations being promulgated for the metal molding and casting category. As a result, specific limitations values such as the one-day maximum were not calculated for this option.

Activated carbon treated effluent concentrations were assumed to be equal to 0.01 mg/l for all toxic organic pollutants. This value was chosen for two reasons. First, the standard detection limit for organic pollutants in a wastewater matrix is 0.01 mg/l. Although activated carbon is capable of removing organics to levels below 0.01 mg/l, routine detection of organics below this level requires more sophisticated and costly analyses than those assumed during calculation of monitoring costs for the metal molding and casting category.

Second, it has been well-demonstrated under laboratory conditions and well-documented in the scientific literature that activated carbon treatment is capable of removing virtually all of the toxic organic pollutants to levels below the normal detection limits for those pollutants. However, large volumes of activated carbon are required in relation to the wastewater volume. The model treatment technology chosen as a basis for Option 4 includes one activated carbon column sized for the particular plant flow, which is sufficient for removal of organics to 0.01 mg/l. Removal of toxic organics below this level would require more than one carbon column in series, but multiple carbon columns were not included as part of the model treatment technology for Option 4.

Incidental removals of total phenol and oil and grease would be expected to occur during activated carbon treatment but these incidental removals are difficult to quantify in the absence of analytical data. Thus, the Agency assumed that no further reduction of metals, total phenol, or oil and grease will occur at Option 4, and that Option 4 concentrations for those pollutants are equal to those determined at Option 3.

Table VII-1

TREATMENT TECHNOLOGY DEMONSTRATION STATUS
(Number of Plants in Metal Molding and Casting Data Base)

Subcategory	Chemical Addition (Alkaline or Acid)	Filtration (Unspecified or Pressure)	Settling	Skimming	Vacuum Filtration	Other (Specify)
Aluminum	4-Alkaline 5-Acid	3-Unspecified 5-Pressure	19	21	1	2-Activated Carbon 1-Ultrafiltration
Copper	7-Alkaline 2-Acid	4-Unspecified	14	4	4	
Ferrous	34-Alklaine 6-Acid	10-Unspecified 7-Pressure	134	28	15	1-Activated Carbon
Magnesium	0	0	0	0	0	
Zinc	8-Alkaline 2-Acid	1-Unspecified 2-Pressure	12	8	2	
TOTALS	53-Alkaline 15-Acid	18-Unspecified 14-Pressure	179	61	22	3-Activated Carbon 1-Ultrafiltration

Table VII-2

CLASSES OF ORGANIC COMPOUNDS ADSORBED ON CARBON

Organic Chemical Class	Examples of Chemical Class
Aromatic Hydrocarbons	benzene, toluene, xylene
Polynuclear Aromatics	naphthalene, anthracene, biphenyls
Chlorinated Aromatics	chlorobenzene, polychlorinated biphenyls, aldrin, endrin, toxaphene, DDT
Phenolics	phenol, cresol, resorcenol and polyphenyls
Chlorinated Phenolics	trichlorophenol, pentachlorophenol
High Molecular Weight Aliphatic and Branch Chain Hydrocarbons	gasoline, kerosene
Chlorinated Aliphatic Hydrocarbons	carbon tetrachloride, perchloroethylene
High Molecular Weight Aliphatic Acids, Aromatic Acids	tar acids, benzoic acid
High Molecular Weight Amines and Aromatic Amines	aniline, toluene diamine
High Molecular Weight Esters, Ethers and Alcohols	hydroquinone, polyethylene glycol
Surfactants	alkyl benzene sulfonates
Soluble Organic Dyes	methylene blue, Indigo carmine

High Molecular Weight includes compounds in the broad range of from 4 to 20 carbon atoms.

Table VII-3

THEORETICAL SOLUBILITIES OF HYDROXIDES, CARBONATES, AND SULFIDES OF SELECTED METALS IN PURE WATER

Metal	Solubility of Metal Ion (mg/l) As Hydroxide	As Carbonate	As Sulfide
Cadmium (Cd++)	2.3×10^{-5}	1.0×10^{-4}	6.7×10^{-10}
Chromium (Cr+++)	8.4×10^{-4}		No precipitate
Cobalt (Co++)	2.2×10^{-1}		1.0×10^{-8}
Copper (Cu++)	2.2×10^{-2}		5.8×10^{-18}
Iron (Fe++)	8.9×10^{-1}		3.4×10^{-5}
Lead (Pb++)	2.1	7.0×10^{-3}	3.8×10^{-9}
Manganese (Mn++)	1.2		2.1×10^{-3}
Mercury (Hg++)	3.9×10^{-4}	3.9×10^{-2}	9.0×10^{-20}
Nickel (Ni++)	6.9×10^{-3}	1.9×10^{-1}	6.9×10^{-8}
Silver (Ag+)	13.3	2.1×10^{-1}	7.4×10^{-12}
Tin (Sn++)	1.1×10^{-4}		3.8×10^{-8}
Zinc (Zn++)	1.1	7.0×10^{-4}	2.3×10^{-7}

Table VII-4

RECYCLE DEMONSTRATION STATUS

Subcategory	Segment	Level of Demonstrated Recycle
Aluminum	Casting Cleaning	2 of 3 processes that recycle achieve at least 95% recycle (all subcategories)
	Casting Quench	8 of 14 processes that recycle achieve at least 98% recycle
	Die Casting	7 of 11 processes that recycle achieve at least 95% recycle (all nonferrous)
	Dust Collection Scrubber	7 of 11 processes that recycle achieve at least 98% recycle (all nonferrous)
	Grinding Scrubber	2 of 3 processes that recycle achieve 100% recycle (all nonferrous)
	Investment Casting	No recyclers identified
	Melting Furnace Scrubber	5 of 13 processes that recycle achieve at least 96% recycle (all nonferrous)
	Mold Cooling	15 of 25 processes that recycle achieve at least 95% recycle (all subcategories)
Copper	Casting Quench	4 of 7 processes that recycle achieve at least 98% recycle
	Direct Chill Casting	5 of 7 processes that recycle achieve at least 95% recycle
	Dust Collection Scrubber	7 of 11 processes that recycle achieve at least 98% recycle (all nonferrous)
	Grinding Scrubber	2 of 3 processes that recycle achieve 100% recycle (all nonferrous)
	Investment Casting	No recyclers identified
	Melting Furnace Scrubber	5 of 13 processes that recycle achieve at least 96% recycle (all nonferrous)
	Mold Cooling	15 of 25 processes that recycle achieve at least 95% recycle (all subcategories)
Ferrous	Casting Cleaning	2 of 3 processes that recycle achieve at least 95% recycle (all subcategories)
	Casting Quench	17 of 24 processes that recycle achieve at least 98% recycle

Table VII-4 (Continued)

RECYCLE DEMONSTRATION STATUS

Subcategory	Segment	Level of Demonstrated Recycle
Ferrous (Cont.)	Dust Collection Scrubber	77 of 126 processes that recycle achieve at least 98% recycle
	Grinding Scrubber	5 of 11 processes that recycle achieve 100% recycle
	Investment Casting	No recyclers identified
	Melting Furnace Scrubber	47 of 85 processes that recycle achieve at least 98% recycle
	Mold Cooling	15 of 25 processes that recycle achieve at least 95% recycle (all subcategories)
	Slag Quench	28 of 52 processes that recycle achieve at least 95% recycle
	Wet Sand Reclamation	3 of 6 processes that recycle achieve at least 80% recycle
Magnesium	Casting Quench	14 of 30 processes that recycle achieve at least 98% recycle (all nonferrous)
	Dust Collection Scrubber	7 of 11 processes that recycle achieve at least 98% recycle (all nonferrous)
	Grinding Scrubber	2 of 3 processes that recycle achieve 100% recycle (all nonferrous)
Zinc	Casting Quench	14 of 30 processes that recycle achieve at least 98% recycle (all nonferrous)
	Die Casting	7 of 11 processes that recycle achieve at least 95% recycle (all nonferrous)
	Melting Furnace Scrubber	4 of 7 processes that recycle achieve at least 96% recycle
	Mold Cooling	15 of 25 processes that recycle achieve at least 95% recycle (all subcategories)

Table VII-5

METAL MOLDING AND CASTING LIME AND SETTLE TREATMENT
EFFECTIVENESS CONCENTRATIONS (mg/l)

EPA AND CONFIRMED DMR DATA

Ferrous Plants

Pollutant	One-Day Maximum	10-Day Monthly Maximum	Long-Term Average
Copper	0.23	0.13	0.062
Lead	0.93	0.43	0.23
Zinc	1.47	0.56	0.40
Oil and Grease	38	12	6
Phenols	1.1	0.36	0.23
Total Suspended Solids	38	15	10

Nonferrous Plants

Copper	0.62	0.32	0.087
Lead	0.24	0.20	0.19
Zinc	0.46	0.16	0.069
Oil and Grease	11	5	3
Phenols	0.29	0.15	0.13
Total Suspended Solids	23	8.4	5.3

Ferrous and Nonferrous Plants

Copper	0.29	0.16	0.065
Lead	0.79	0.39	0.22
Zinc	1.14	0.43	0.27
Oil and Grease	30	10	5
Phenols	0.86	0.30	0.20
Total Suspended Solids	33	13	8.6

Table VII-6

METAL MOLDING AND CASTING LIME AND SETTLE TREATED EFFLUENT CONCENTRATIONS (mg/l)

INDIVIDUAL PLANT DATA FOR COPPER

Ferrous Plants

Plant	Long-Term Mean	One-Day Variability Factor	10-Day Variability Factor
Tyler Pipe (South) Tyler, TX	0.077	1.87	1.00
Griffin Pipe Florence, NJ	0.042	5.94	2.75
J.I. Case Racine, WI	ND	-	-
Chrysler Indianopolis, IN	0.31	2.46	1.16
Deere Waterloo, IA	ND	-	-

Nonferrous Plants

NL Industries Pottstown, PA	ND	-	-
Olin East Alton, IL	0.17	4.45	1.70

ND - Not detected.

Table VII-7

METAL MOLDING AND CASTING LIME AND SETTLE TREATED EFFLUENT CONCENTRATIONS (mg/l)

INDIVIDUAL PLANT DATA FOR LEAD

Ferrous Plants

Plant	Long-Term Mean	One-Day Variability Factor	10-Day Variability Factor
Tyler Pipe (South) Tyler, TX	0.50	2.83	1.20
Tyler Pipe Macungie, PA	0.20	2.88	1.75
Griffin Pipe Florence, NJ	0.37	4.53	1.32
Tyler Pipe (North) Tyler, TX	0.62	3.06	1.21
J.I. Case Racine, WI	ND	-	-
Chrysler Indianopolis, IN	0.56	2.79	1.20
Deere Waterloo, IA	ND	-	-

Nonferrous Plants

NL Industries Pottstown, PA	0.19	1.28	1.00

ND - Not detected.

Table VII-8

METAL MOLDING AND CASTING LIME AND SETTLE TREATED EFFLUENT CONCENTRATIONS (mg/l)

INDIVIDUAL PLANT DATA FOR ZINC

Ferrous Plants

Plant	Long-Term Mean	One-Day Variability Factor	10-Day Variability Factor
Tyler Pipe (South) Tyler, TX	0.92	4.46	1.34
Tyler Pipe Macungie, PA	0.41	3.81	1.27
Griffin Pipe Florence, NJ	0.48	3.74	1.29
Tyler Pipe (North) Tyler, TX	0.73	3.38	1.25
J.I. Case Racine, WI	0.13	2.05	1.15
Chrysler Indianapolis, IN	1.09	5.29	1.40
Deere Waterloo, IA	0.08	2.94	1.25

Nonferrous Plants

NL Industries Pottstown, PA	0.03	16.18	4.00
Olin East Alton, IL	0.12	3.87	1.33

Table VII-9

METAL MOLDING AND CASTING LIME AND SETTLE TREATED EFFLUENT CONCENTRATIONS (mg/l)

INDIVIDUAL PLANT DATA FOR OIL AND GREASE

Ferrous Plants

Plant	Long-Term Mean	One-Day Variability Factor	10-Day Variability Factor
Tyler Pipe (South) Tyler, TX	4.8	7.39	1.72
Tyler Pipe Macungie, PA	10	12.65	2.22
Griffin Pipe Florence, NJ	2.4	4.17	2.86
Tyler Pipe (North) Tyler, TX	5.1	6.18	1.53
J.I. Case Racine, WI	7.1	9.27	1.72
Chrysler Indianapolis, IN	2.1	3.10	1.22
Deere Waterloo, IA	18	3.31	1.24

Nonferrous Plants

NL Industries Pottstown, PA	6.8	3.67	1.27
Olin East Alton, IL	0.9	5.78	2.64

Table VII-10

METAL MOLDING AND CASTING LIME AND SETTLE TREATED EFFLUENT CONCENTRATIONS (mg/l)

INDIVIDUAL PLANT DATA FOR PHENOL

Ferrous Plants

Plant	Long-Term Mean	One-Day Variability Factor	10-Day Variability Factor
Tyler Pipe (South) Tyler, TX	0.82	1.87	1.11
Griffin Pipe Florence, NJ	0.052	10.24	1.80
J.I. Case Racine, WI	0.017	1.94	1.00
Chrysler Indianapolis, IN	3.95	2.67	1.18

Nonferrous Plants

NL Industries Pottstown, PA	0.13	2.33	1.15

Table VII-11

METAL MOLDING AND CASTING LIME AND SETTLE TREATED EFFLUENT CONCENTRATIONS (mg/l)

INDIVIDUAL PLANT DATA FOR TOTAL SUSPENDED SOLIDS

Ferrous Plants

Plant	Long-Term Mean	One-Day Variability Factor	10-Day Variability Factor
Tyler Pipe (South) Tyler, TX	9.9	3.17	1.23
Tyler Pipe Macungie, PA	9.8	5.56	1.44
Griffin Pipe Florence, NJ	13	4.72	1.35
Tyler Pipe (North) Tyler, TX	10	3.09	1.22
J.I. Case Racine, WI	4.1	2.17	1.14
Deere Waterloo, IA	20	3.71	1.59

Nonferrous Plants

NL Industries Pottstown, PA	7.5	3.70	1.40
Olin East Alton, IL	3.8	5.07	1.38

Table VII-12

TREATMENT EFFECTIVENESS CONCENTRATIONS FOR THE METAL MOLDING AND CASTING CATEGORY - OPTION 2

Ferrous Subcategory

Pollutant	Effluent Concentrations (mg/l) Long-Term	Ten-Day Average	One-Day Maximum
Copper	0.065	0.16	0.29
Lead	0.22	0.39	0.79
Zinc	0.40	0.56	1.47
TSS	10	15	38
O&G	5	10	30
Phenol	0.20	0.30	0.86

Nonferrous Subcategories

Pollutant	Effluent Concentrations (mg/l) Long-Term	Ten-Day Average	One-Day Maximum
Copper	0.17	0.42	0.77
Lead	0.22	0.39	0.79
Zinc	0.27	0.43	1.14
TSS	10	15	38
O&G	5	10	30
Phenol	0.20	0.30	0.86

Table VII-13

TREATMENT EFFECTIVENESS CONCENTRATIONS FOR
PRIORITY TOXIC ORGANIC POLLUTANTS (mg/l)

Pollutant		Long-Term Average Treatment Effectiveness Concentrations (mg/l)
1.	acenaphthene	0.010
4.	benzene	0.020
5.	benzidine	0.022
6.	carbon tetrachloride	0.020
7.	chlorobenzene	0.020
10.	1,2-dichloroethane	0.022
11.	1,1,1-trichloroethane	0.020
14.	1,1,2-trichloroethane	0.022
21.	2,4,6-trichlorophenol	0.048
22.	p-chloro-m-cresol	0.022
23.	chloroform	0.078
24.	2-chlorophenol	0.022
30.	1,2-trans-dichloroethylene	0.022
31.	2,4-dichlorophenol	0.048
34.	2,4-dimethylphenol	0.010
38.	ethylbenzene	0.020
39.	fluoranthene	0.018
43.	bis(2-chloroethoxy)methane	0.024
44.	methylene chloride	0.059
45.	methyl chloride	0.024
48.	dichlorobromomethane	0.016
54.	isophorone	0.016
55.	naphthalene	0.024
57.	2-nitrophenol	0.022
58.	4-nitrophenol	0.022
59.	2,4-dinitrophenol	0.010
60.	4,6-dinitro-o-cresol	0.010
62.	N-nitrosodiphenylamine	0.010
63.	N-nitrosodi-n-propylamine	0.010
64.	pentachlorophenol	0.014
65.	phenol	0.018
66.	bis(2-ethylhexyl) phthalate	0.032
67.	butyl benzyl phthalate	0.010
68.	di-n-butyl phthalate	0.022
69.	di-n-octyl phthalate	0.022
70.	diethyl phthalate	0.016
71.	dimethyl phthalate	0.013
72.	benzo(a)anthracene	0.010

Table VII-13 (Continued)

TREATMENT EFFECTIVENESS CONCENTRATIONS FOR
PRIORITY TOXIC ORGANIC POLLUTANTS (mg/l)

Pollutant	Long-Term Average Treatment Effectiveness Concentrations (mg/l)
73. benzo(a)pyrene	0.010
74. 3,4-benzofluoranthene	0.011
75. benzo(k)fluoranthene	0.014
76. chrysene	0.014
77. acenaphthylene	0.014
78/81. anthracene/phenanthrene*	0.010
80. fluorene	0.010
84. pyrene	0.012
85. tetrachloroethylene	0.047
86. toluene	0.020
87. trichloroethylene	0.020

*These two compounds are generally reported together.

Table VII-14

TREATMENT EFFECTIVENESS CONCENTRATIONS FOR THE METAL MOLDING AND CASTING CATEGORY OPTION 3

Ferrous Subcategory

Pollutant	Long-Term Effluent Concentration (mg/l)	10-Day Average Effluent Concentration (mg/l)	One-Day Maximum Effluent Concentration (mg/l)
Copper	0.065	0.16	0.29
Lead	0.15	0.26	0.53
Zinc	0.26	0.37	0.98
TSS	2.6	12	15
O&G	5	10	30
Phenol	0.20	0.30	0.86

Nonferrous Subcategories

Pollutant	Long-Term Effluent Concentration (mg/l)	10-Day Average Effluent Concentration (mg/l)	One-Day Maximum Effluent Concentration (mg/l)
Copper	0.17	0.42	0.77
Lead	0.15	0.26	0.53
Zinc	0.18	0.29	0.76
TSS	2.6	12	15
O&G	5	10	30
Phenol	0.20	0.30	0.86

Note: TSS concentrations for Option 2 are presented in Table VII-13. Filtration is not expected to reduce TTO concentrations significantly.

Table VII-15

LIME AND SETTLE EFFLUENT DATA
COMPARISON BETWEEN THE COMBINED METALS DATA BASE
AND METAL MOLDING AND CASTING DATA

	Lime and Settle Effluent (mg/l)			Lime, Settle and Filter Effluent (mg/l)		
		MM&C			MM&C	
	CMDB	Ferrous	Nonferrous	CMDB	Ferrous	Nonferrous
Cu	0.58	0.065	0.17	0.39	0.065	0.17
Pb	0.12	0.22	0.22	0.08	0.15	0.15
Zn	0.33	0.40	0.27	0.23	0.26	0.18

All data are long-term averages.

Table VII-16

MULTIMEDIA FILTER PERFORMANCE

Plant ID Number	TSS Effluent Concentration, mg/l
06097	0.0, 0.0, 0.5
13924	1.8, 2.2, 5.6, 4.0, 4.0, 3.0, 2.2, 2.8, 3.0, 2.0, 5.6, 3.6, 2.4, 3.4
18538	1.0
30172	1.4, 7.0, 1.0
36048	2.1, 2.6, 1.5
Mean	2.61

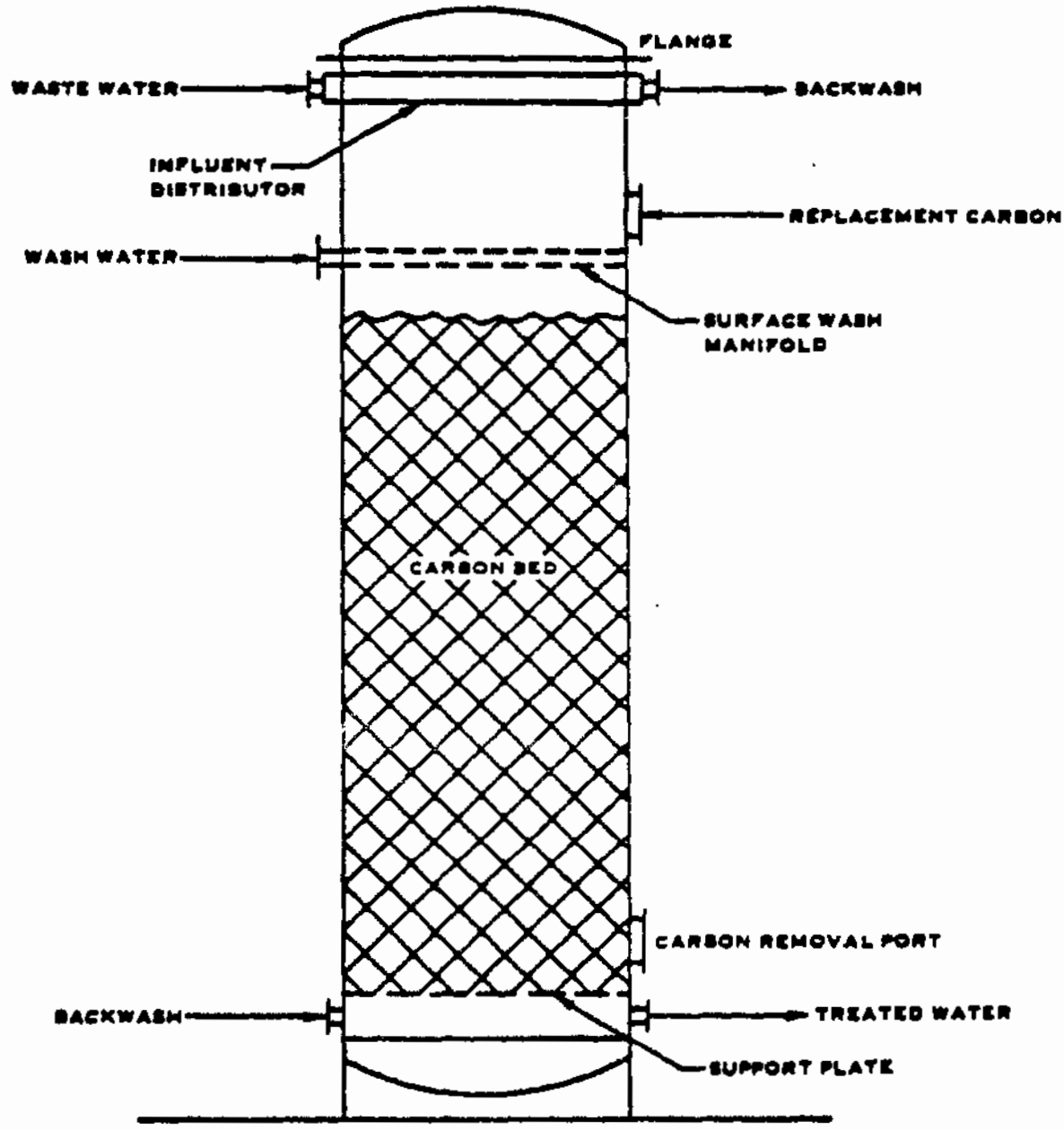

Figure VII-1

ACTIVATED CARBON ADSORPTION COLUMN

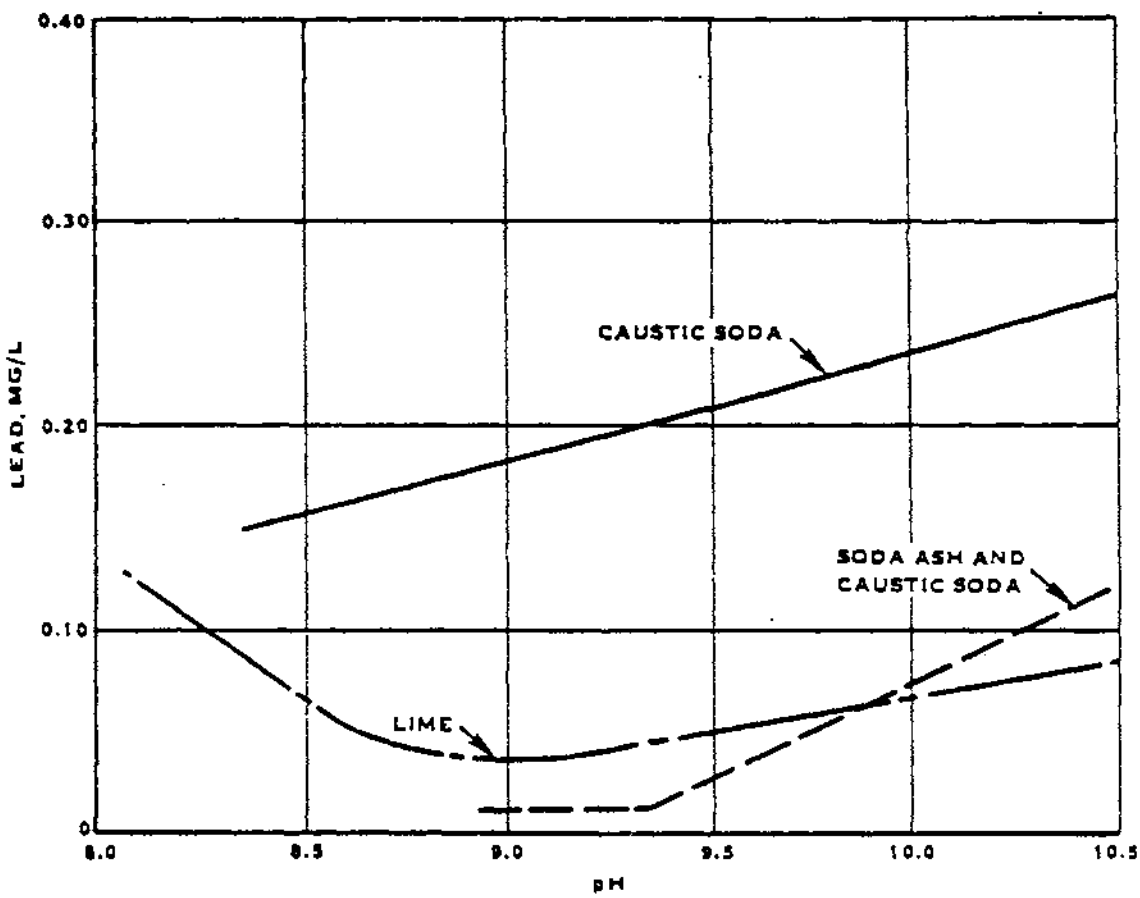

Figure VII-2

LEAD SOLUBILITY IN THREE ALKALIES

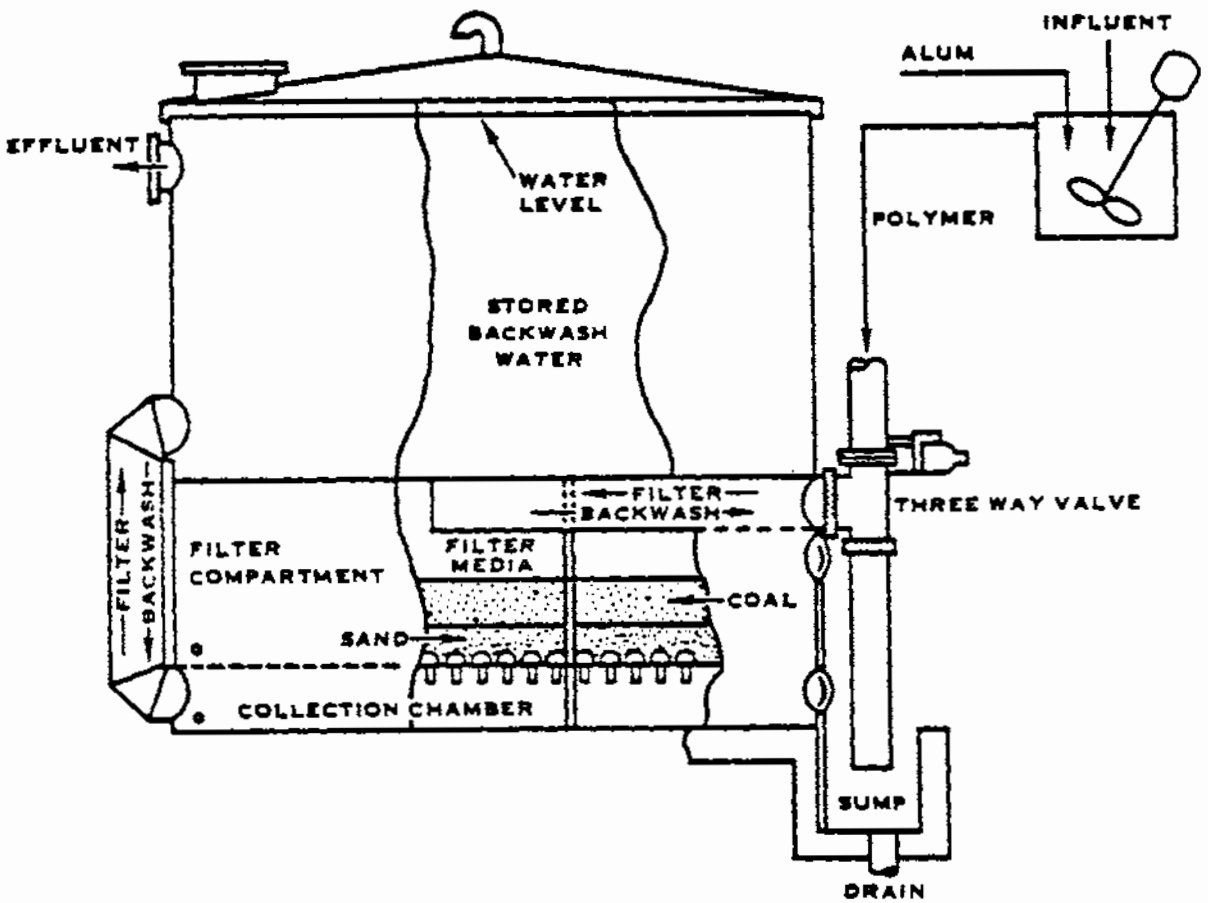

Figure VII-3

GRANULAR BED FILTRATION

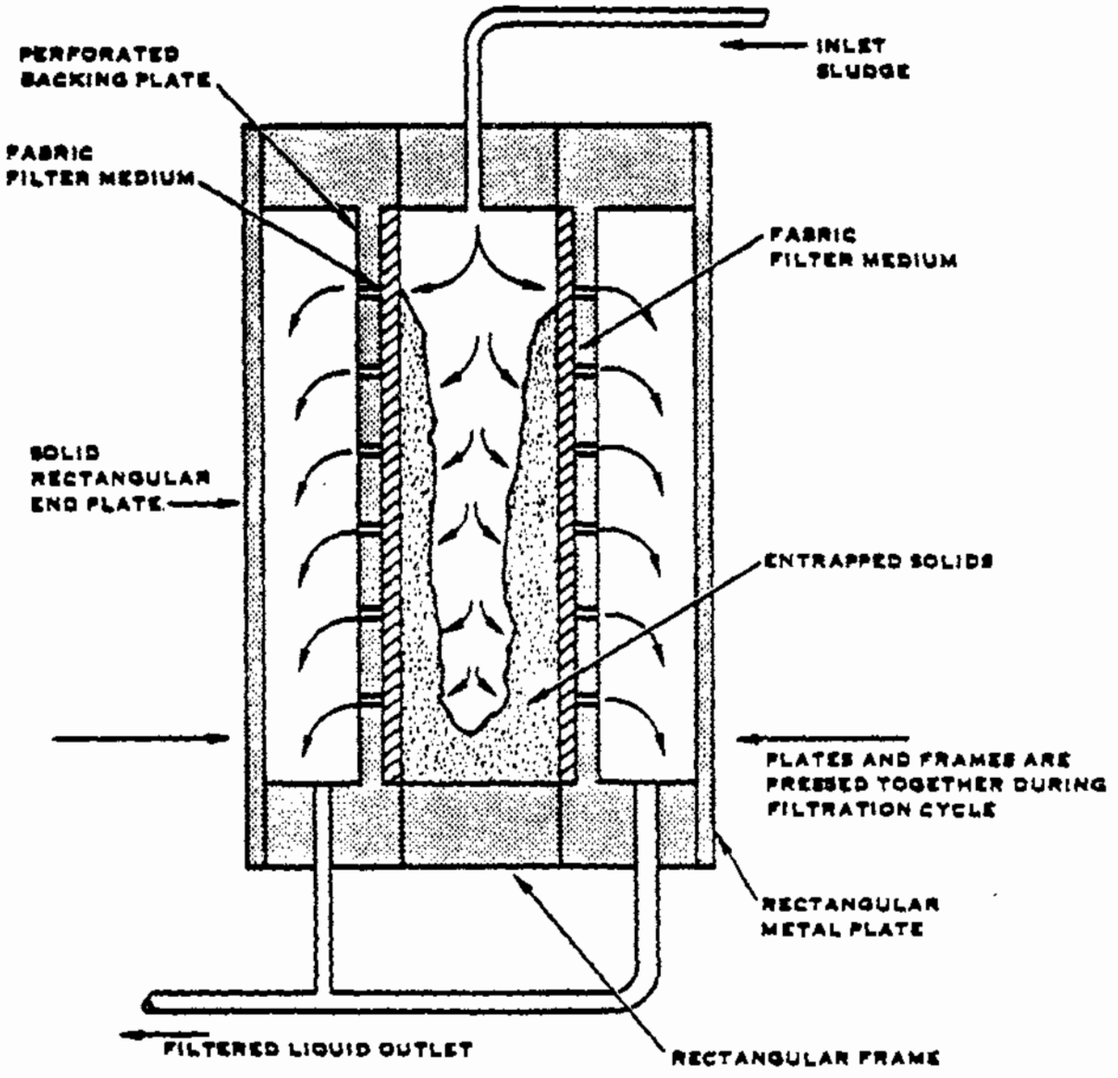

Figure VII-4

PRESSURE FILTRATION

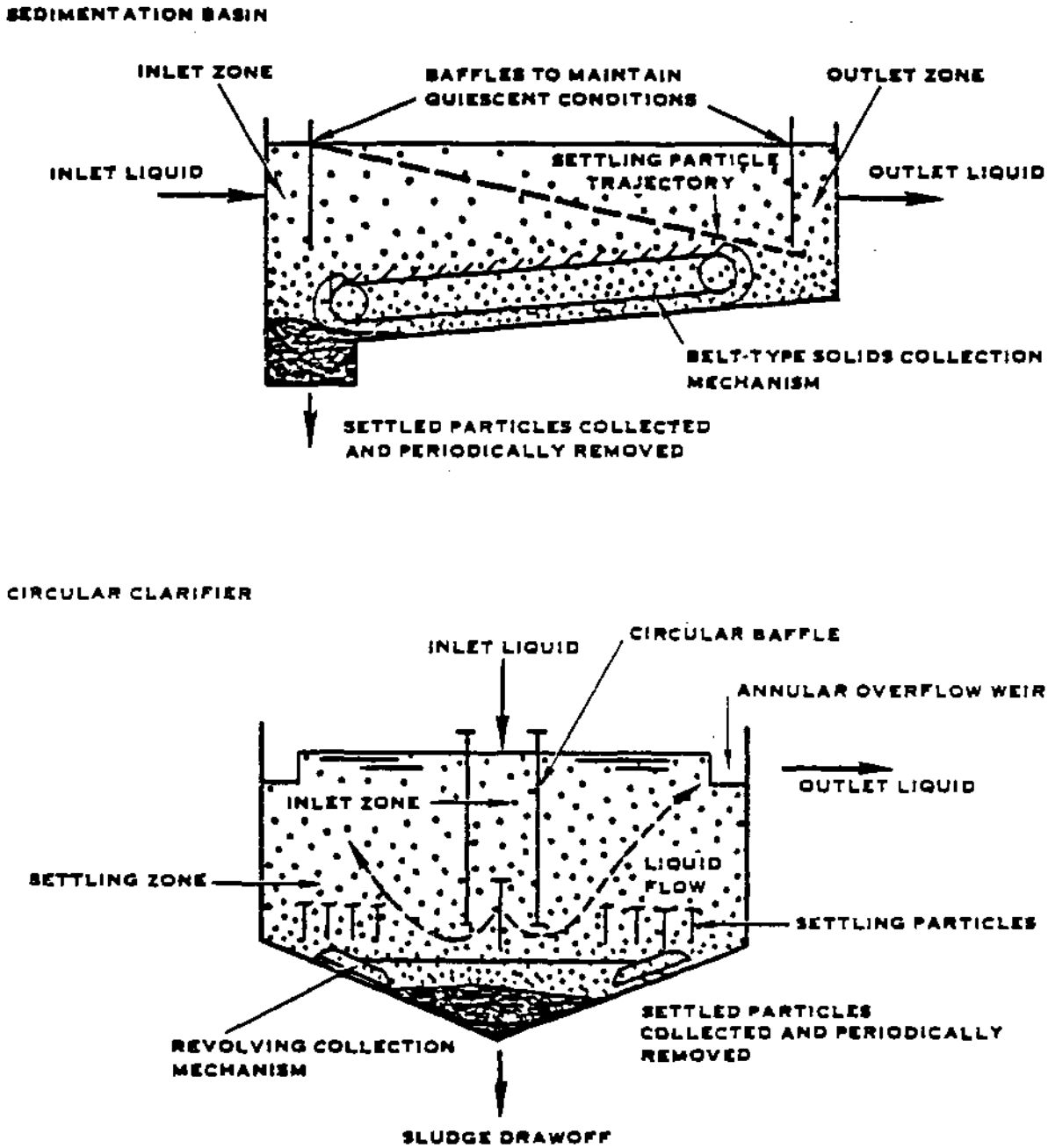

Figure VII-5

REPRESENTATIVE TYPES OF SEDIMENTATION

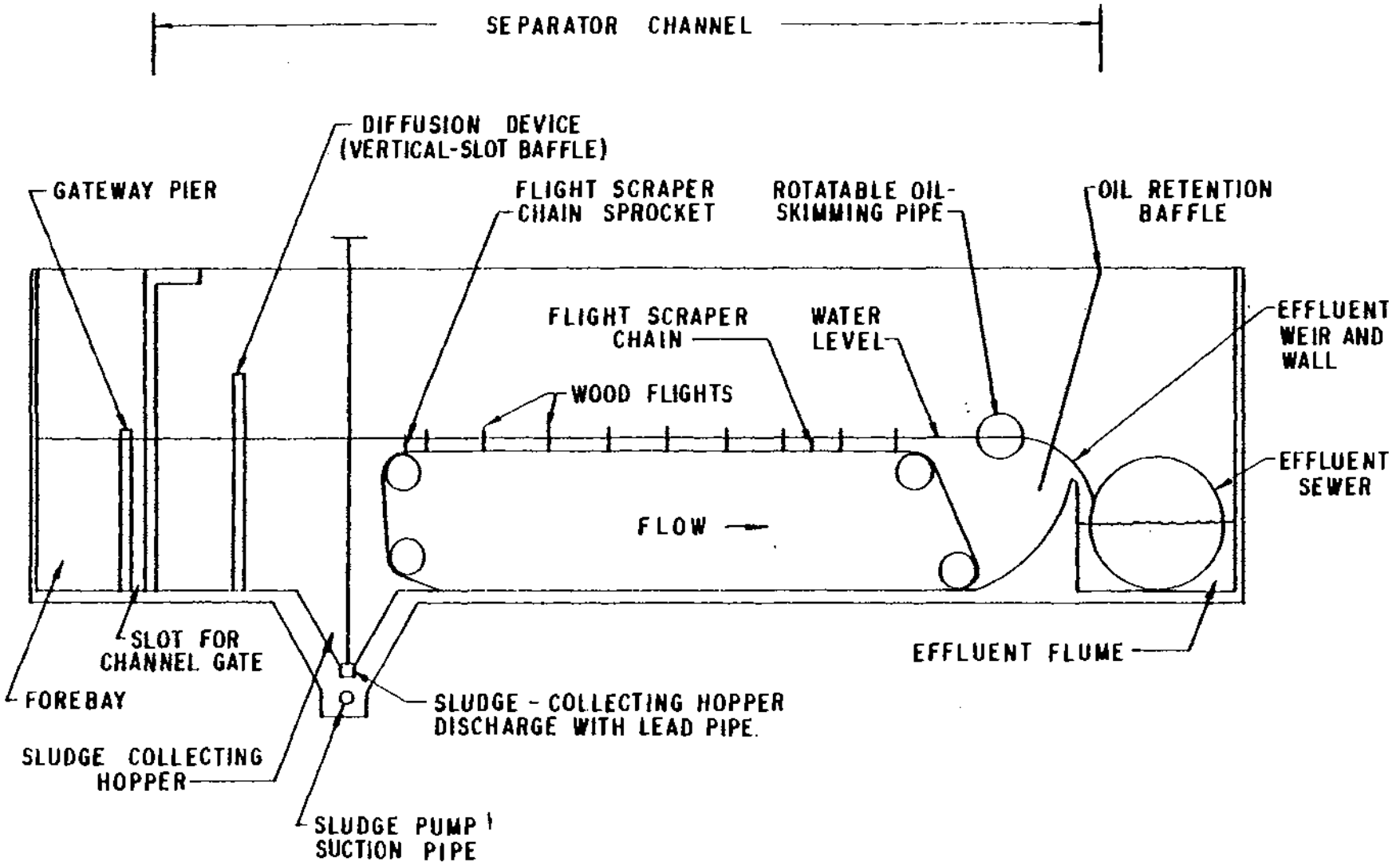

Figure VII-6

GRAVITY OIL/WATER SEPARATOR

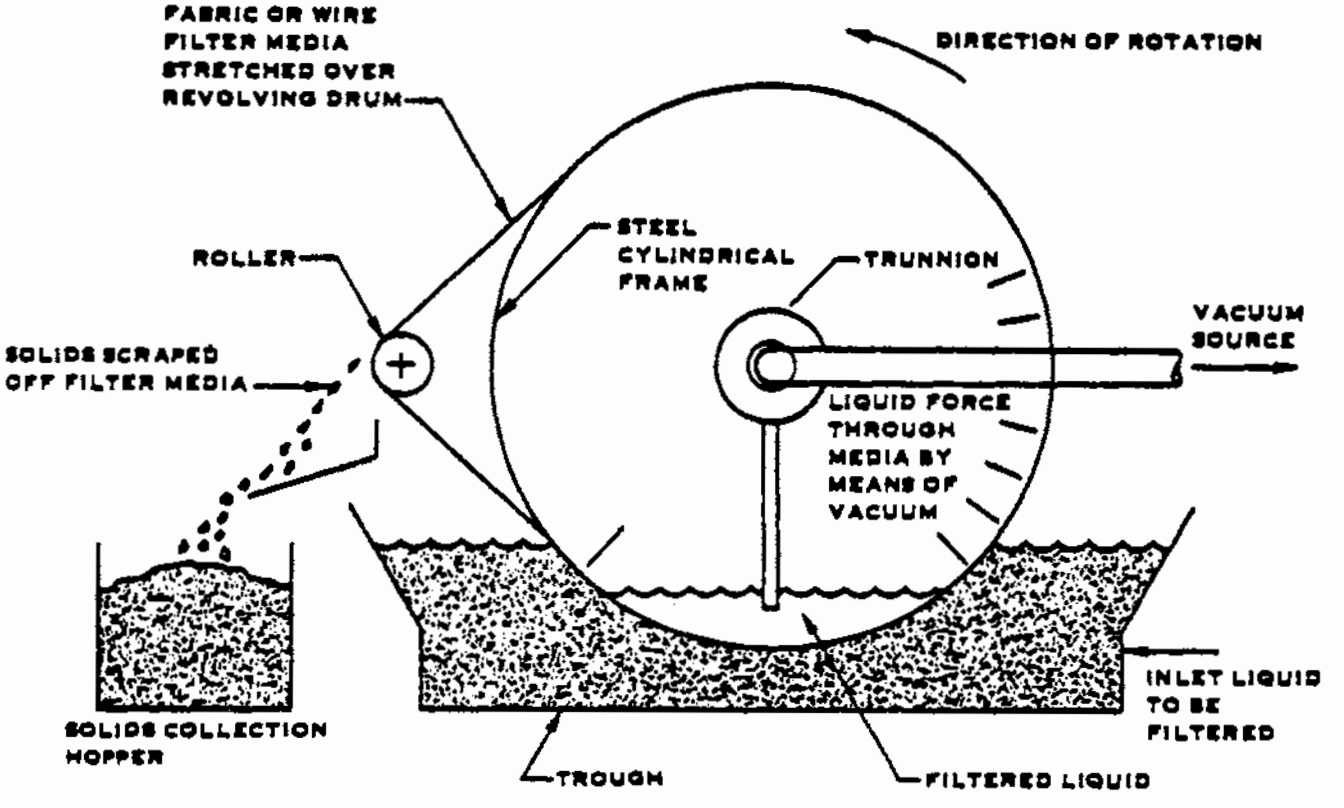

Figure VII-7

VACUUM FILTRATION

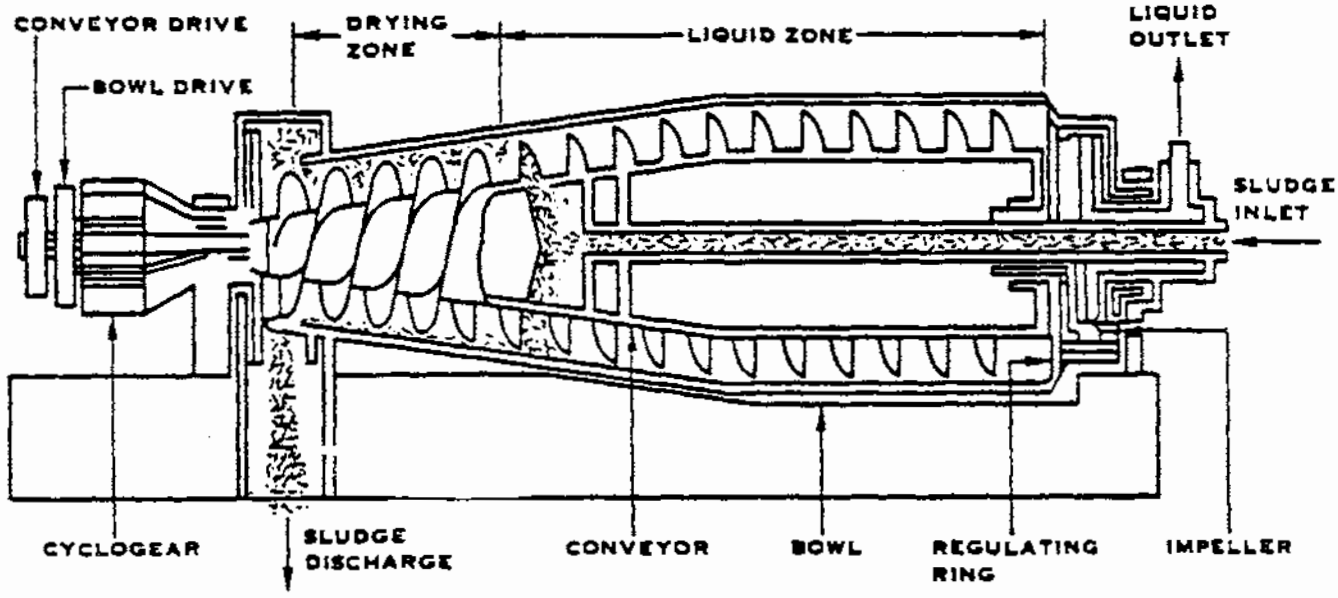

Figure VII-8

CENTRIFUGATION

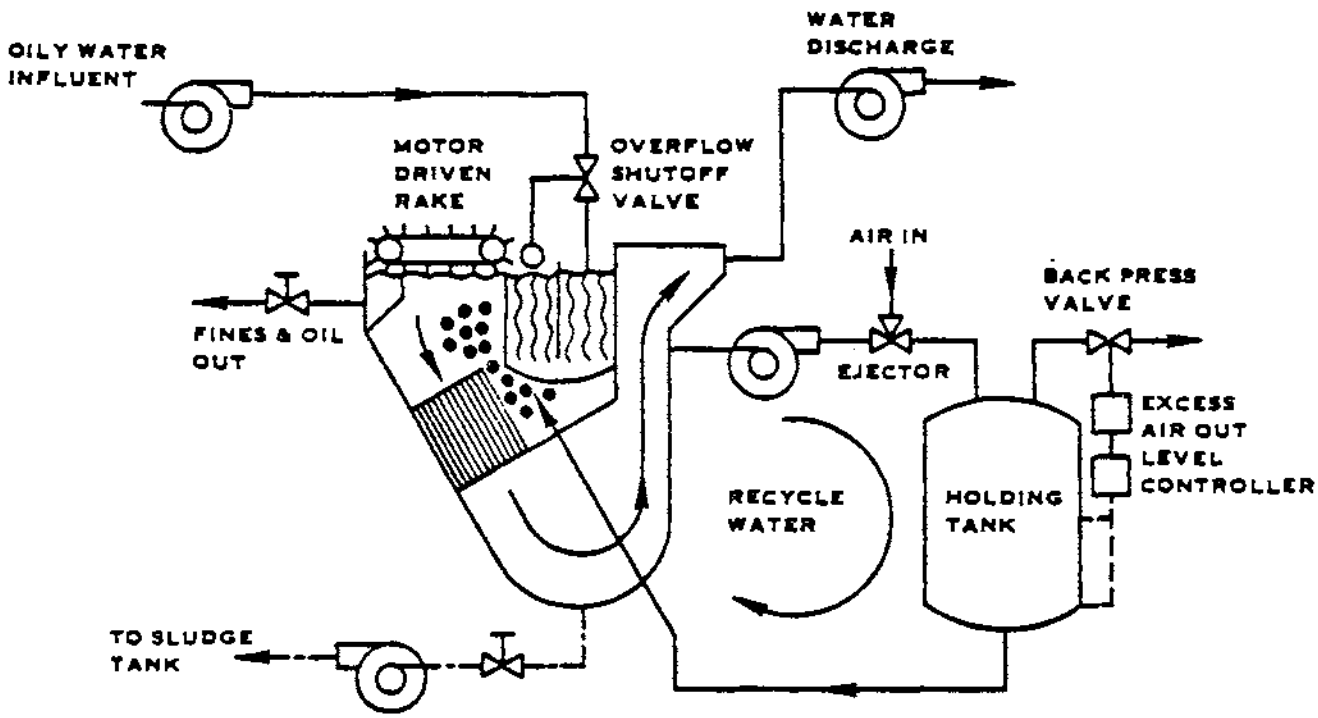

Figure VII-9

DISSOLVED AIR FLOTATION

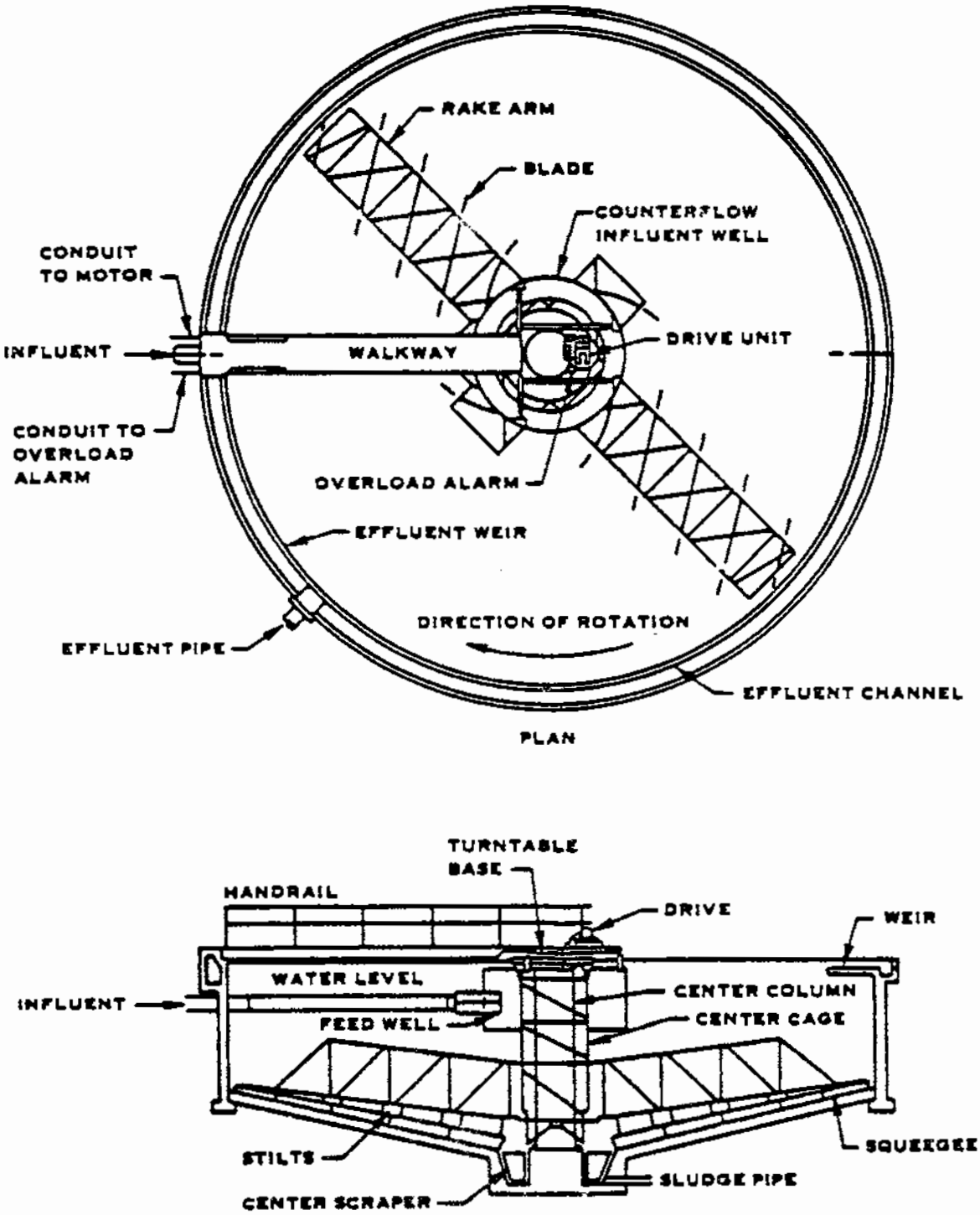

Figure VII-10

GRAVITY THICKENING

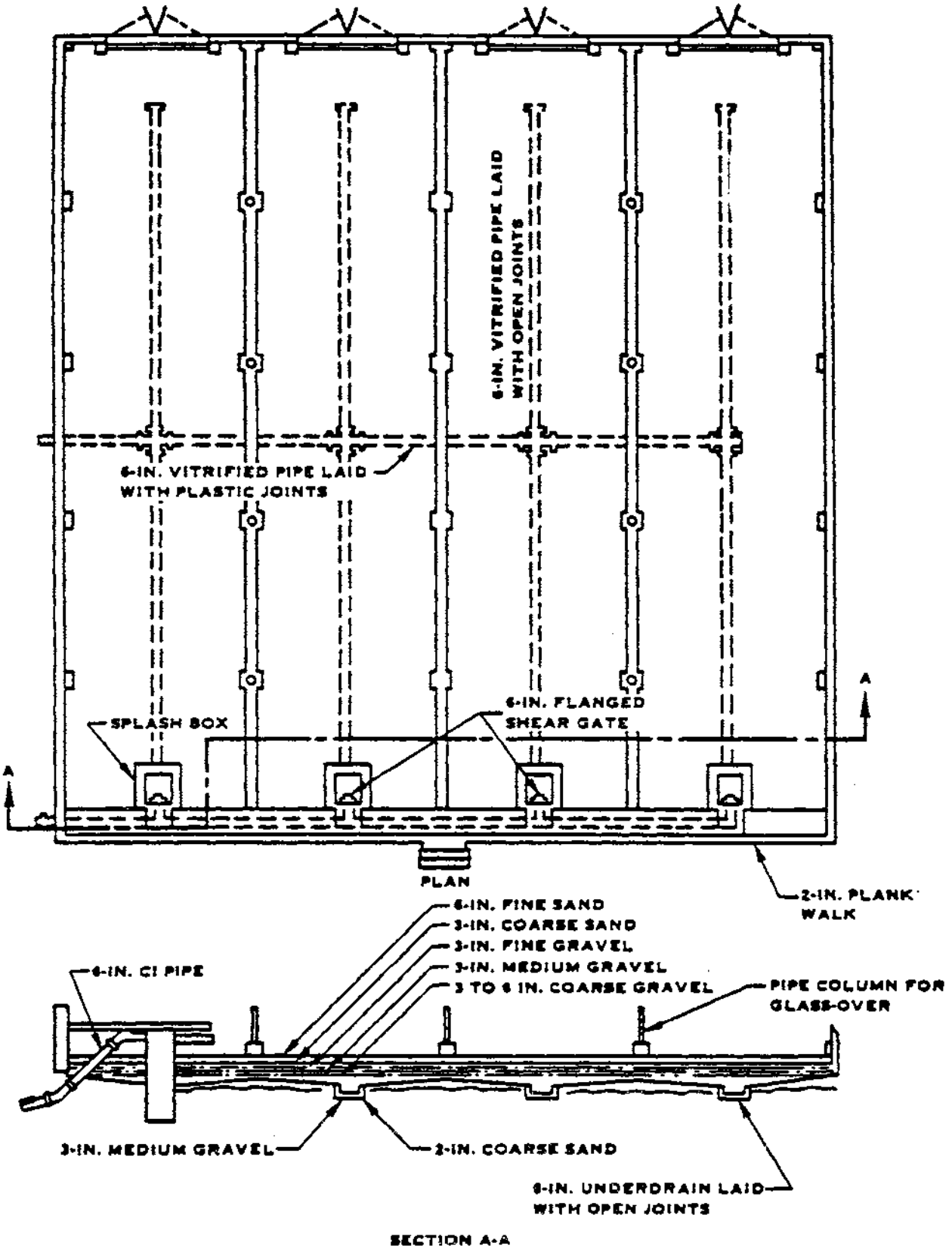

Figure VII-11

SLUDGE DRYING BED

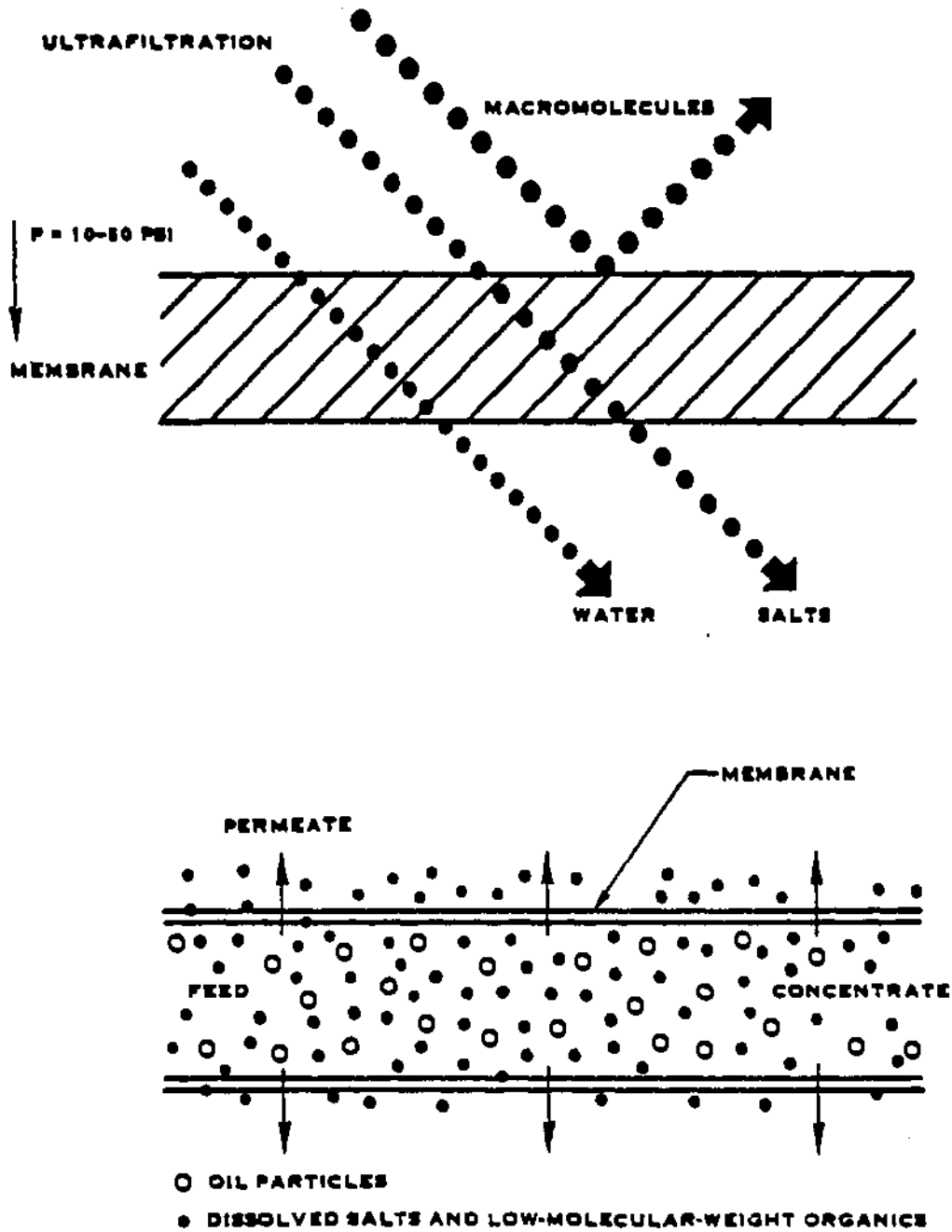

Figure VII-12

SIMPLIFIED ULTRAFILTRATION FLOW SCHEMATIC

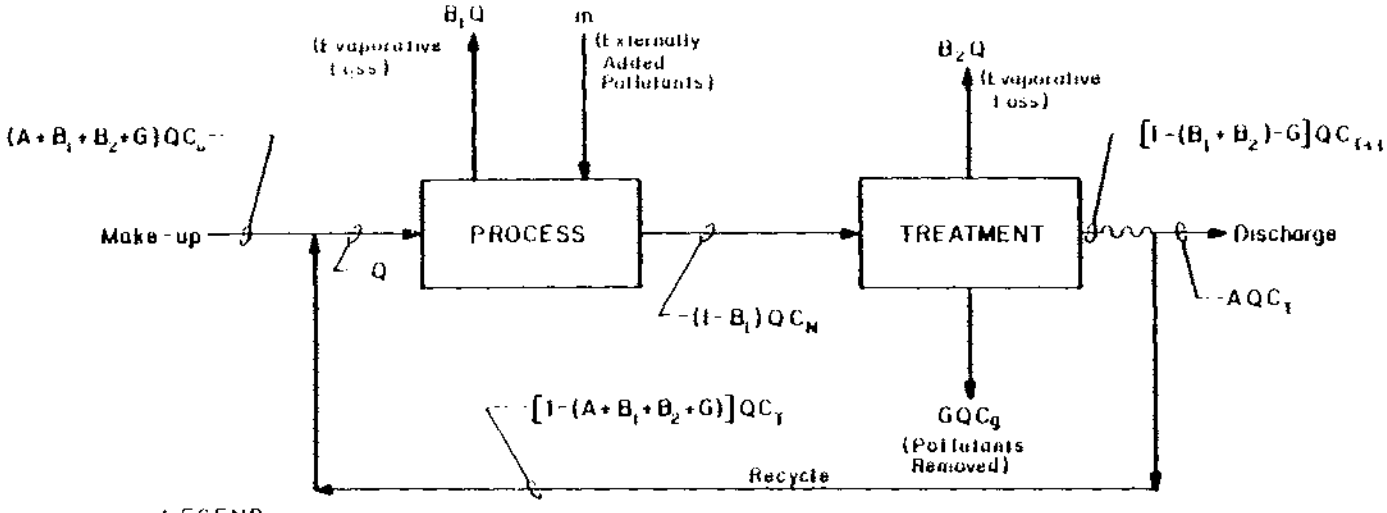

LEGEND

Q = Total Flow

A = Blowdown Fraction

B_1 = Evaporative Loss Fraction from the Process

B_2 = Evaporative Loss Fraction from the Treatment

G = Fraction of Flowrate Loss Due to Pollutant Removal

m = Amount of Pollutant Added Each Pass

C_N = Concentration of Material after "N" Cycles

C_g = Concentration of Material Removed by the Treatment System

C_o = Concentration of Material in the Make-up Water

C_T = Concentration of Material Discharged and in Recycle Loop

C_{T+1} = Concentration of Material at T+1 Passes Through the System

Figure VII-13

WATER CHEMISTRY MODEL - GENERALIZED WASTEWATER RECYCLE SYSTEM

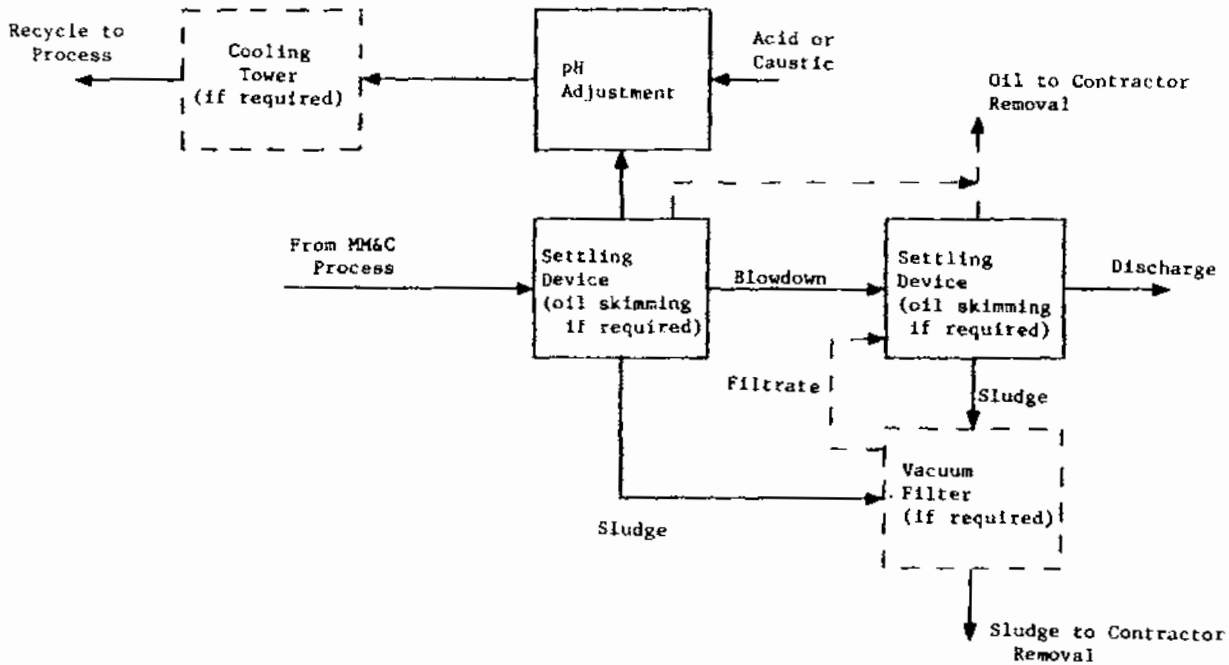

Cooling towers required in:

Cu CQ 10-49, 50-99, 100-249, ≥250
Cu DCC all
Cu MC all
Fe CQ 50-99, 100-249, ≥250
Fe MC all
Zn MC all

Vacuum filters required in:

Cu DCC ≥250
Cu MC 100-249
Fe WSR ≥250

Oil skimming required in:

Al - CQ, CS, IC, MFS, MC
Cu - CQ, DCC, UC, GS, IC, MFS, MC
Fe - CQ, UC, IC, MFS, MC
Mg - CQ, UC, GS
Zn - CQ, MFS, ML

Figure VII-14

TREATMENT OPTION 1: RECYCLE AND SETTLE

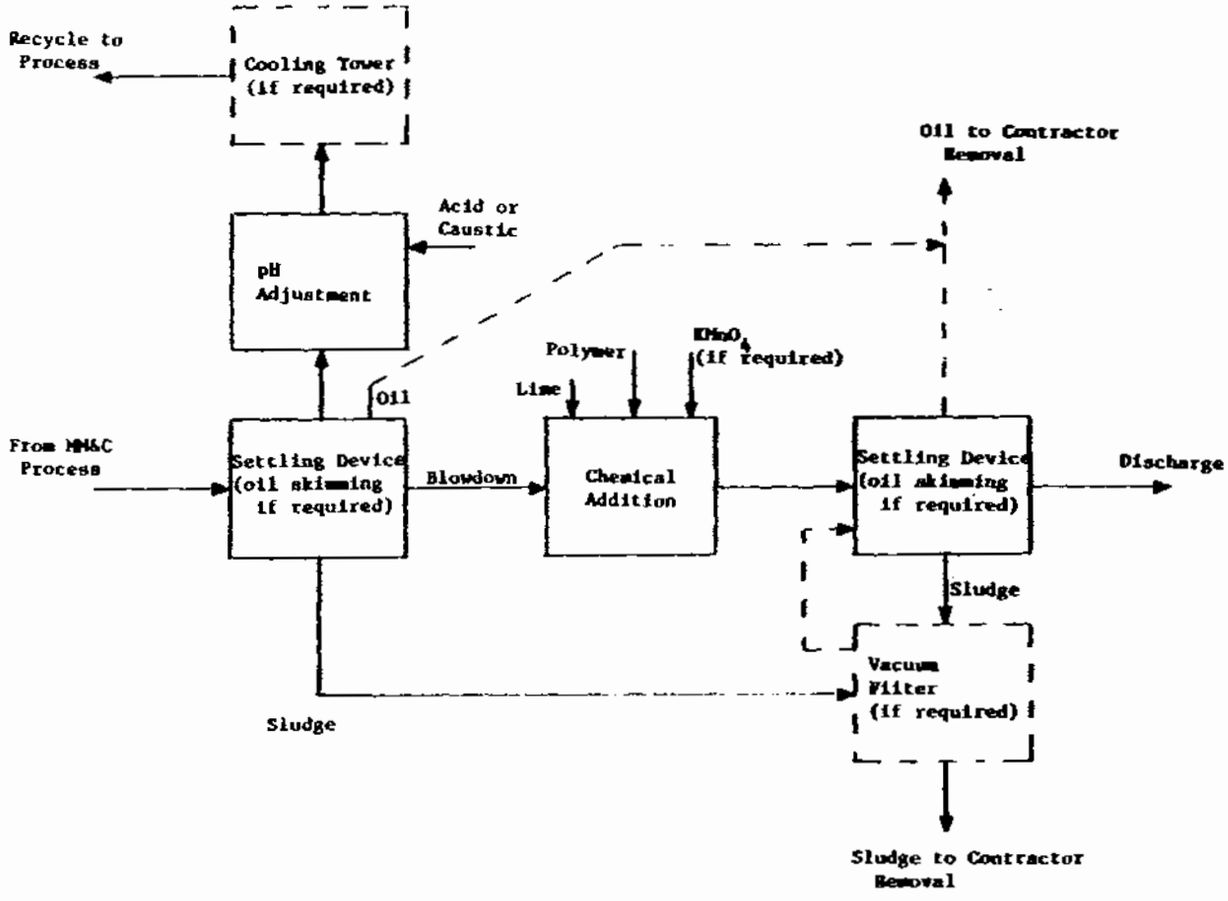

Cooling towers required in:

Cu CQ	10-49, 50-99, 100-249, ≥250
Cu DCC	all
Cu MC	all
Fe CQ	50-99, 100-249, ≥250
Fe MC	all
Zn MC	all

Vacuum filters required in:

Cu DCC	≥250
Cu MC	100-249
Fe WSR	≥250

Oil skimming required in:

Al	CQ, GS, IC, MFS, MC
Cu	CQ, DCC, UC, GS, IC, MFS, MC
Fe	CQ, UC, IC, MFS, MC
Mg	CQ, UC, GS
Zn	CQ, MFS, ML

$KMnO_4$ oxidation required in:

Al	UC, MFS
Cu	UC, MFS
Fe	UC, MFS, WSR
Zn	MFS

Figure VII-15

TREATMENT OPTION 2: RECYCLE, LIME, AND SETTLE

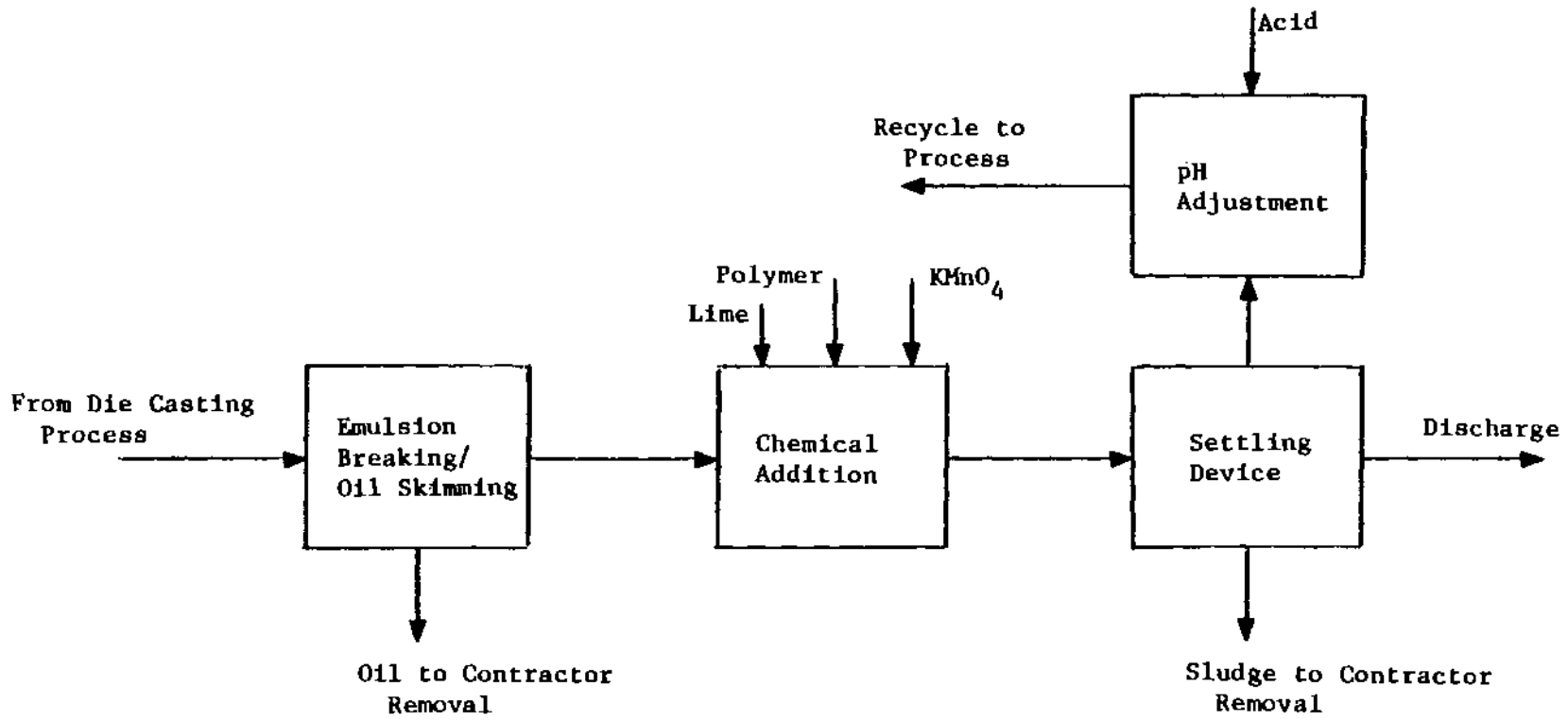

Figure VII-16

TREATMENT OPTION 2 FOR ALUMINUM AND ZINC DIE CASTING PROCESS SEGMENTS

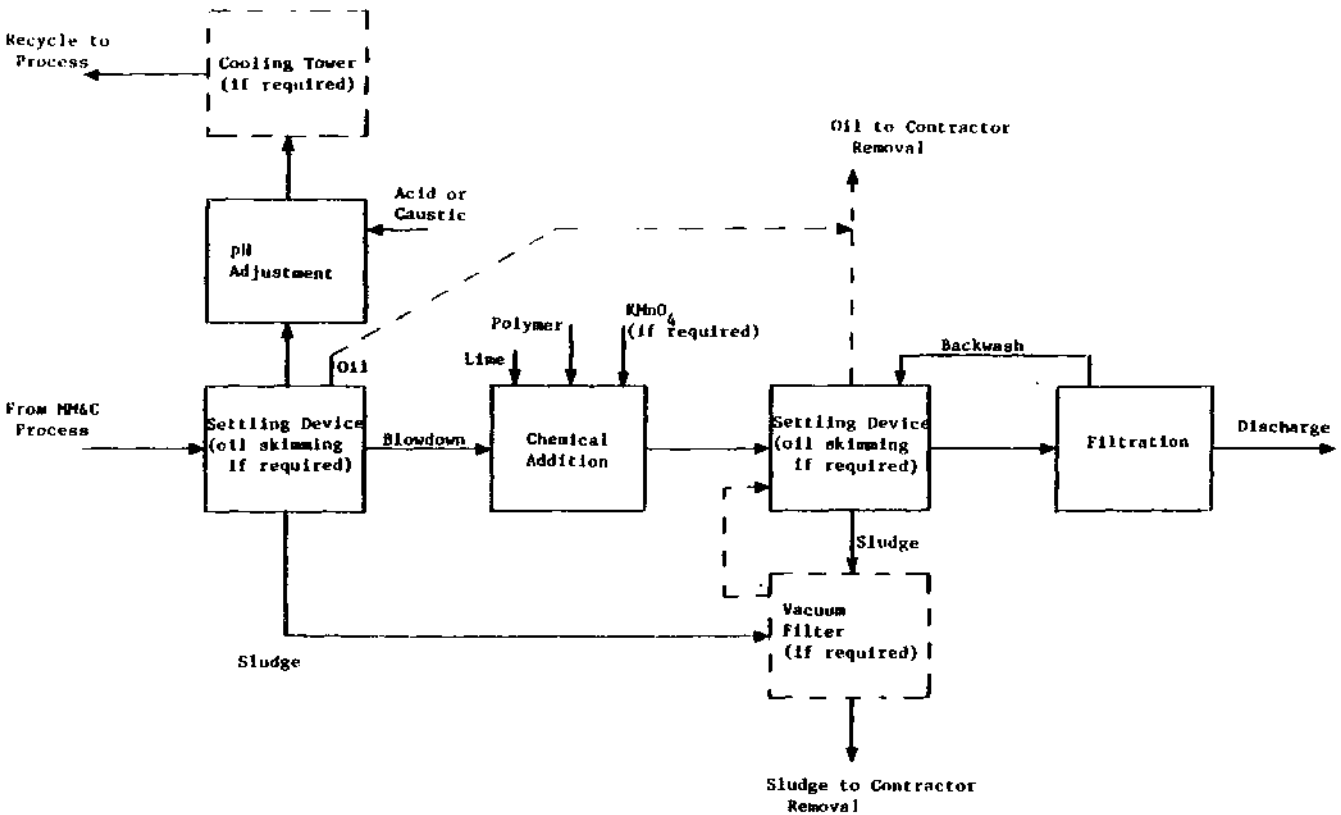

Cooling towers required in:

Cu CQ	10-49, 50-99, 100-249, ≥250
Cu DCC	all
Cu MC	all
Fe CQ	50-99, 100-249, ≥250
Fe MC	all
Zn MC	all

Vacuum filters required in:

Cu DCC	≥250
Cu MC	100-249
Fe WSR	≥250

Oil skimming required in:

Al	CQ, GS, IC, MFS, MC
Cu	CQ, DCC, UC, GS, IC, MFS, MC
Fe	CQ, UC, IC, MFS, MC
Mg	CQ, UC, GS
Zn	CQ, MFS, ML

$KMnO_4$ oxidation required in:

Al	UC, MFS
Cu	UC, MFS
Fe	UC, MFS, WSR
Zn	MFS

Figure VII-17

TREATMENT OPTION 3: RECYCLE, LIME, SETTLE, AND FILTER

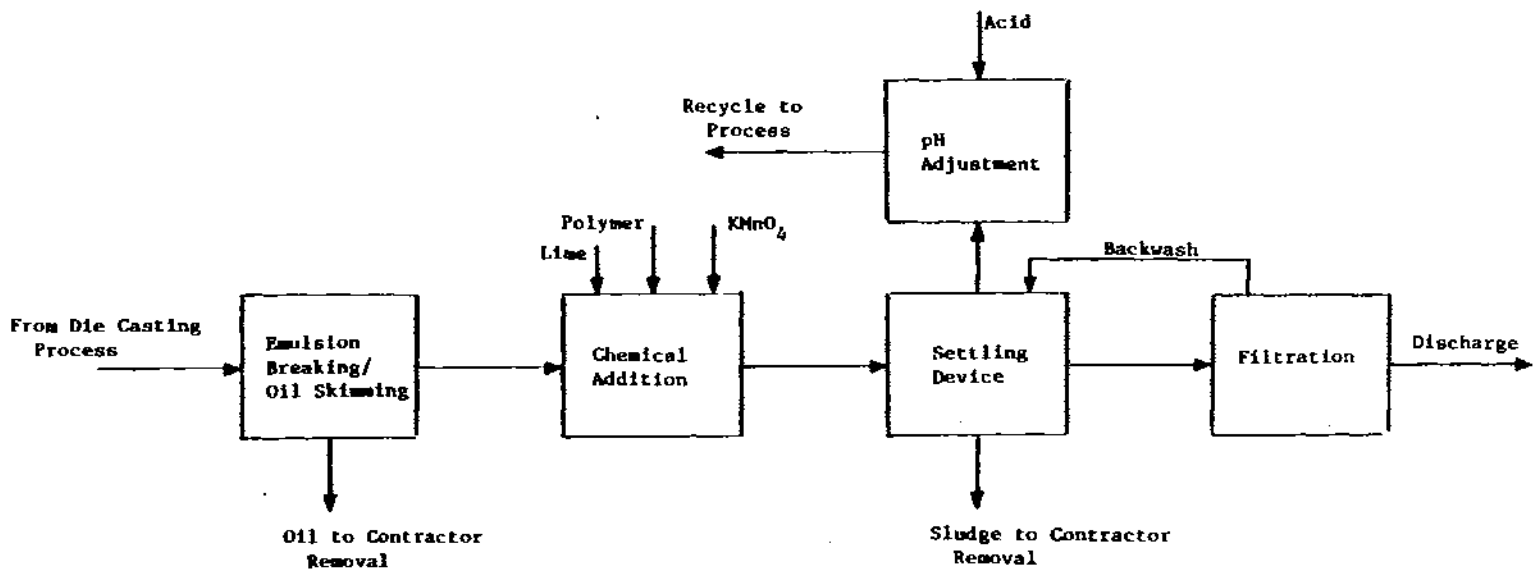

Figure VII-18

TREATMENT OPTION 3 FOR ALUMINUM AND ZINC DIE CASTING PROCESS SEGMENTS

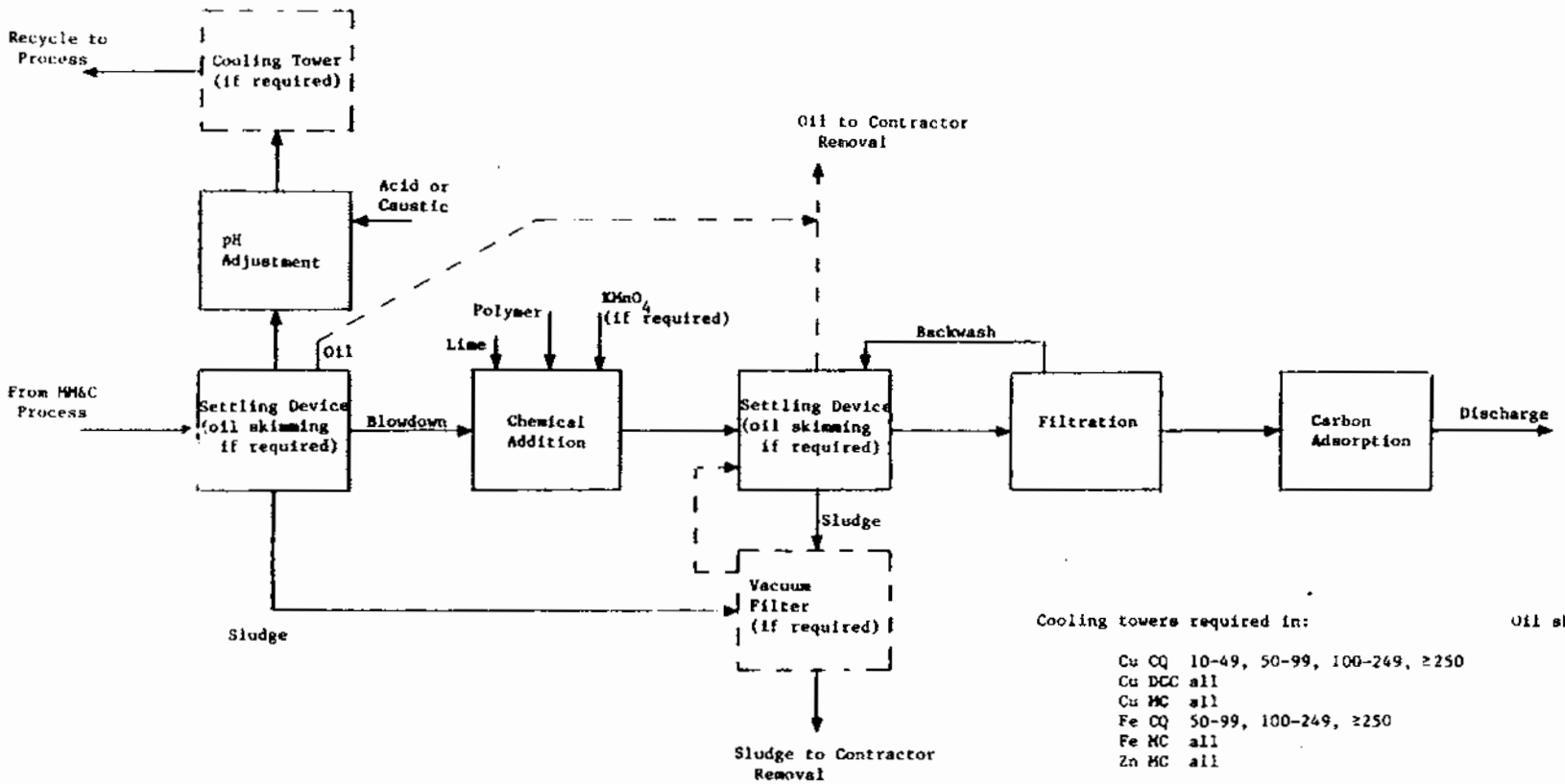

Cooling towers required in:

Cu CQ	10-49, 50-99, 100-249, ≥250
Cu DCC	all
Cu HC	all
Fe CQ	50-99, 100-249, ≥250
Fe HC	all
Zn HC	all

Vacuum filters required in:

Cu DCC	≥250
Cu HC	100-249
Fe WSR	≥250

Oil skimming required in:

Al	CQ, GS, IC, MFS, HC
Cu	CQ, DCC, UC, GS, IC, MFS, HC
Fe	CQ, UC, IC, MFS, HC
Mg	CQ, UC, GS
Zn	CQ, MFS, ML

$KMnO_4$ oxidation required in:

Al	UC, MFS
Cu	UC, MFS
Fe	UC, MFS, WSR
Zn	MFS

Figure VII-19

TREATMENT OPTION 4: RECYCLE, LIME, SETTLE, FILTER, AND CARBON ADSORPTION

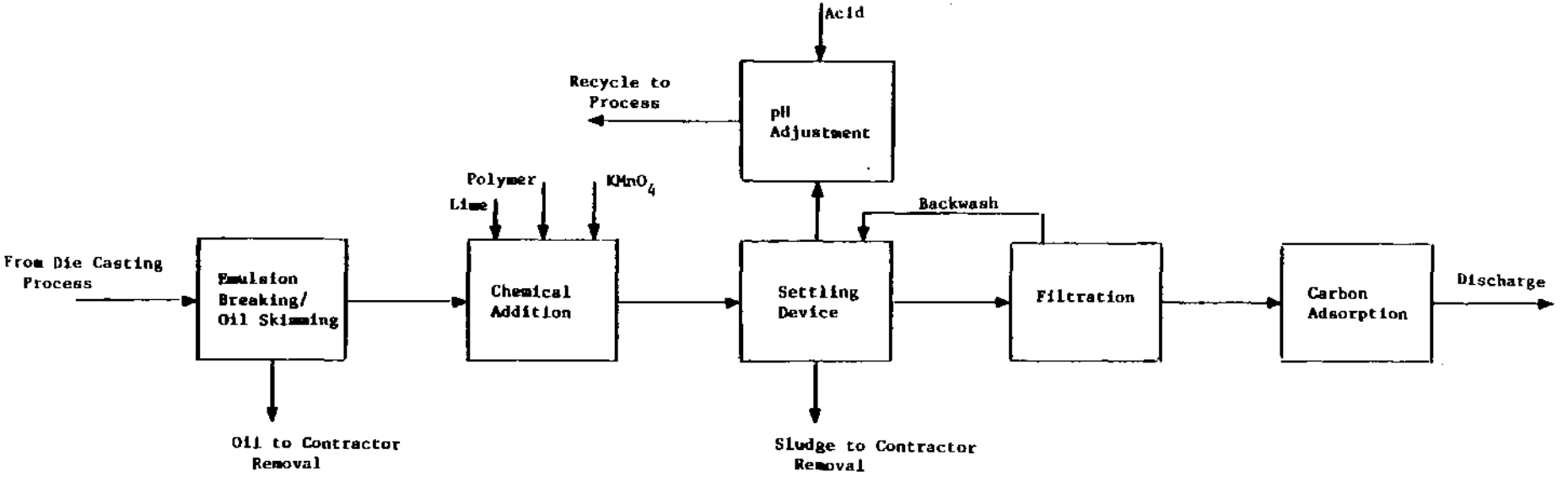

Figure VII-20

TREATMENT OPTION 4 FOR ALUMINUM AND ZINC DIE CASTING PROCESS SEGMENTS

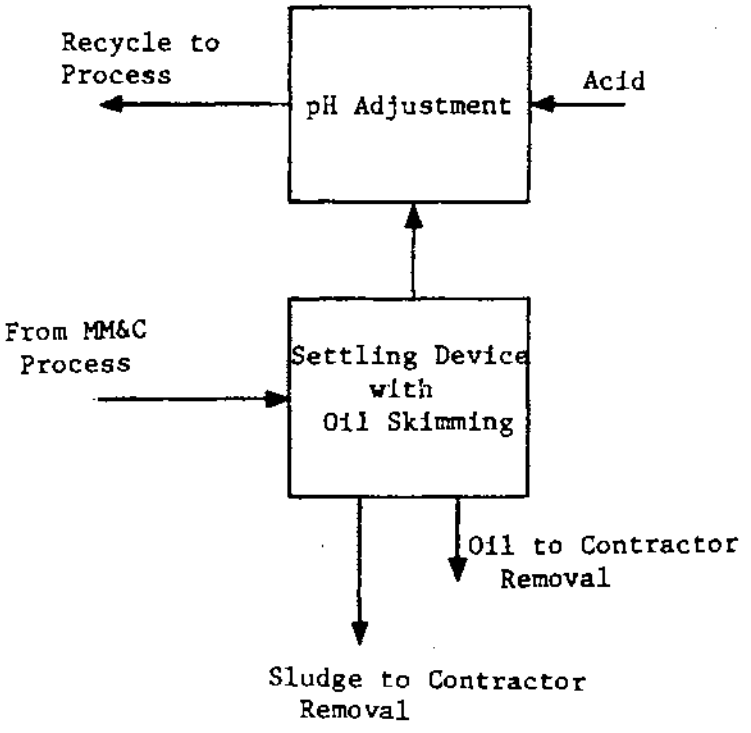

Figure VII-21

TREATMENT OPTION 5: SETTLE AND COMPLETE RECYCLE

SECTION VIII

COST, ENERGY, AND NON-WATER QUALITY IMPACTS

This section presents estimated costs of the wastewater treatment and control technologies described in Section VII. These cost estimates, together with the estimated pollutant reduction performance for each treatment and control option presented in Section IX, provide a basis to evaluate the treatment and control technology options and to identify the best practicable control technology currently available (BPT), the best available technology economically achievable (BAT), the best conventional pollutant control technology (BCT), the best available demonstrated technology (BDT), and the appropriate technologies for pretreatment standards (PSES/PSNS). The cost estimates are also used as the basis to estimate the economic impact of compliance with the final effluent limitations guidelines and standards on the metal molding and casting category. In addition, this section addresses nonwater quality environmental impacts of the wastewater treatment and control options, including energy requirements and air pollution and solid waste generation.

COST ESTIMATION

Industry-wide compliance costs have been developed for each of the five technology options considered for the metal molding and casting category. In summary, the five technology options considered are:

Option 1 - High rate recycle, settling
Option 2 - High rate recycle, chemical addition, settling
Option 3 - High rate recycle, chemical addition, settling, filtration
Option 4 - High rate recycle, chemical addition, settling, filtration, activated carbon adsorption
Option 5 - Complete recycle.

Compliance costs for each option were calculated using a model plant approach. A model plant has been developed for each of many divisions of the category, as divided by metal type, employment size group, and process type. To calculate the industry cost for a particular treatment option, the following procedure was carried out. The model plant costs were multiplied by a utilization factor, which accounts for treatment-in-place. These values were then multiplied by the number of dischargers within the industry within the particular segment. The three inputs used to calculate industry costs, (1) model plant costs, (2) utilization factors, and (3) projected number of dischargers, are described in greater detail in the material that follows.

Model Plant Costs

A sample model plant cost sheet is presented for discussion purposes as Table VIII-1.

All model plant costs are expressed in terms of first quarter 1983 dollars. The sample model plant cost sheet presented in Table VIII-1 is for the ferrous subcategory, dust collection scrubber wastewater control, for a plant with 10-49 employees engaged in metal molding and casting activities. A model plant within this segment operates one shift per day (the mean of all survey data for the segment, rounded to the nearest whole number of shifts).

The model plant for this segment has a scrubber air flow of 28,400 scfm (the mean of all survey data for a plant with 10-49 employees in this process segment). Water use is related to air flow in scrubber operations (dust collection scrubber, grinding scrubber, melting furnace scrubber), tons of sand reclaimed in wet sand reclamation, and tons of metal poured for all other metal molding and casting operations. The relationship of water used to these parameters is documented in Section IV.

The header line on the sample model plant cost sheet labeled "Treatment Component" lists the equipment required for Treatment Option 3. Option 3 for this segment consists of settling in a drag tank, followed by recycle to the process with acid addition to control scale formation. The blowdown from the recycle loop is treated with chemicals in a batch tank to enhance pollutant removals. Chemical treatment for ferrous dust collection waste water includes potassium permanganate addition to oxidize phenol ics and other organics and lime and polymer addition to enhance solids settling and metals removals. After chemical addition and mixing in the batch tank, the wastewater is allowed to settle for four hours, and is then passed through a cartridge filter prior to discharge. All treatment options considered for this and other process segments are described in Section VII. Costs for individual components of the treatment system are estimated based upon data in Section 22.43 of the record. A list of the treatment component abbreviations used on the model plant cost sheets is provided along with those sheets in Section 22.43 of the record.

The flow rate associated with each piece of treatment equipment was calculated from the applied flow rate. In this example, the applied flow rate is 85 gpm listed under DT, drag tank. The recycle and blowdown flow rates (flow rates for column B and columns C through E, respectively) were calculated from the applied flow rate based upon the achievable recycle rates for the particular metal and process type. Achievable recycle rates and applied flows are presented in Section IX. The flow rate in columns C through E are equal to the normalized discharge allowance multiplied by the mass of metal poured at this model plant.

Investment and annual costs were calculated for each piece of equipment based upon flow rate and wastewater characteristics. Data sets used to calculate investment and annual costs for each treatment component, including design assumptions and supporting cost information, are included in Section 22.43 of the record. Those data sets were used to calculate investment, energy, and chemical costs by linearly interpolating between data points. Investment costs include the cost of installed capital equipment, 15 percent of the installed equipment cost for contingency, 15 percent of the installed equipment cost for engineering, and 10 percent of the installed equipment cost for contractor's fee. Operation and maintenance (O&M) costs were based primarily on a percentage of investment costs. Base O&M costs were figured as 6 percent of investment, plus a maximum additional 4 percent of investment prorated to the number of shifts per day the plant operates, i.e., a plant that operates one shift per day had O&M costs of 6 percent + (1/3)4 percent = 7.33 percent.

The above formula models data comparing labor cost to total installed capital cost presented in "Estimating Water Treatment Costs, Volume 2," EPA 600/2-76-82b. In addition to the base O&M cost, additional costs were assumed for batch systems which require more labor than continuous systems because of manual chemical addition and surface skimming requirements.

EPA conducted a survey of actual metal molding and casting sludge disposal costs in 1981. The median sludge disposal cost for the 52 plants providing data was $4.70 per ton. EPA also reviewed sludge disposal costs contained in a draft report prepared for EPA's Office of Solid Waste entitled "RCRA Risk/Cost Policy Model Project, Phase 2 Report." Based on this report, EPA projected that sludge disposal costs would be about $21.00 per ton including both disposal site costs and transportation to a disposal site located 50 miles away. Because metal molding and casting sludges are not listed as hazardous by EPA at this time and because tests show that these wastes are not hazardous as defined by the EP toxicity test, EPA used sludge disposal cost information applicable to nonhazardous waste. Rather than use the 1981 industry data, the Agency based its estimates of sludge disposal on a cost of $21.00 per ton. Oil disposal costs are based on an oil disposal fee of $28.60 per ton. This disposal cost is based on the median disposal cost at six metal molding and casting plants surveyed in 1981, scaled up to first quarter 1983 dollars.

Monitoring costs are based upon the following monitoring frequencies:

	Metals, Conventionals, and Nonconventionals
Batch Treatment Systems	2 times/month
Continuous Treatment Systems	4 times/month

The estimated sampling frequencies are based in part upon a document entitled "Minimum Monthly Sampling Frequency," located in Section 22.43 of the record, and commonly required sampling frequencies specified in existing permits. Annual monitoring costs include both the cost of analysis and shipment of samples to a contract laboratory.

Model plant costs for each regulatory option under consideration for each segment were included in the public record of this rulemaking in Section 22.43. Those record materials were prepared in support of the February 14, 1985 notice of availability, and were available for public review at that time. After public review of the February 15, 1985 notice of availability and supporting record materials, several public comments were received questioning EPA's compliance cost estimating assumptions. In general, commenters tended to be in agreement with EPA's capital cost estimates but felt that the annual cost estimates were understated. Specific comments and written responses can be found in the Comment Response Documents, record Section 22.75.

EPA carefully reviewed each comment and has made the following adjustments to the model plant cost estimates.

O&M Costs - As discussed above, EPA had originally assumed that O&M costs would be based on between 6 to 10 percent of the installed capital cost, as a function of number of shifts per day the treatment plant operated. Additional labor costs were included for batch treatment systems where labor intensive manual operations were required.

Comments were received stating that while the above assumptions were adequate for operating labor at larger model plants, very small model plants that required a relatively small capital expenditure may not have been provided with adequate labor costs using the Agency's initial methodology. The commenters also asserted that maintenance materials had not been provided for. The Agency reviewed the commenters' assertions and made two adjustments to the O&M estimating methodology. After reviewing the source of the original 6 to 10 percent of capital cost for O&M cost assumption, "Estimating Water Treatment Costs, Volume 2," the Agency determined that the initial estimate did not include costs for maintenance materials. Costs provided in the above reference suggest that 2 percent of the installed capital cost per year is an adequate estimate of maintenance material expenditures. Therefore, the Agency added 2 percent of the installed capital cost to the annual model plant costs to account for maintenance materials costs. The Agency also determined that the initial assumption did not provide adequate operating labor at very small plants. Therefore, EPA adopted a minimum operating labor requirement at very small model plants based upon operating practices observed during sampling trips and site visits at plants in this and similar categories. The minimum operating labor requirements at very small plants were assumed to be 0.5

hrs/shift at Option 1 level treatment, 0.8 hrs/shift at Option 2 level treatment, and 1.0 hrs/shift at Option 3 and Option 4 level treatment.

Monitoring Costs - Comments were received that the cost per analysis on which the Agency had based annual monitoring costs were too low. The initial costs were based on pricing data provided by a commercial laboratory. However, it could not be determined whether the costs were based on a bulk contract rate or on a single sample rate. Therefore, the Agency solicited additional pricing data from two other commercial laboratories based on low volume analytical requirements. The original pricing data were averaged with the data provided by the two additional laboratories to determine the average cost per analysis currently used.

In addition, costs associated with monitoring for priority organic pollutants are no longer included in the annual monitoring cost requirements. Priority organic pollutants are not specifically regulated at direct discharging facilities. The Agency believes that indirect discharging facilities will choose to monitor for oil and grease as an alternate monitoring parameter, rather than monitor for priority organic pollutants. The use of oil and grease as an alternate monitoring parameter is discussed in Section XIII.

Change in Design Basis - The design bases of some of the treatment options have been adjusted for the purpose of estimating compliance costs. Potassium permanganate addition has been included at Option 2 level treatment in the following process segments:

Aluminum dust collection
Aluminum melting furnace scrubber
Copper dust collection
Copper melting furnace scrubber
Ferrous melting furnace scrubber
Zinc melting furnace scrubber

The addition of potassium permanganate oxidation to these six segments brings to 10 the number of process segments with potassium permanganate addition. Potassium permanganate oxidation was included in the Option 2 compliance costs for aluminum die casting, ferrous dust collection, ferrous wet sand reclamation, and zinc die casting presented in the record of the February 15, 1985 notice of availability. While the Option 2 treatment effectiveness concentrations for total phenols are based on the incidental removal of phenols in an oil removal, lime and settle treatment system, some plants may have to employ chemical oxidation to meet the phenol limitations and standards. Therefore, Option 2 compliance costs for the aforementioned 10 process segments include costs for potassium permanganate oxidation. Costs for this technology have been included in these segments to ensure that the compliance costs reflect the costs that would be incurred at plants with concentrations of phenol

that require additional removal beyond that provided by oil removal and lime and settle treatment.

The design basis for the treatment systems in the die casting process segments have been changed so that the full measure of Option 2 treatment (chemical emulsion breaking, skimming, chemical oxidation and lime and settle treatment) is now provided inside the recycle loop. This change has been made in response to public comment that the quality of die casting process water after simple settle treatment may not make it suitable for recycle. Including Option 2 treatment inside the recycle loop will ensure that the process water recycled to the die casting process is of suitable quality for reuse.

Changes in Applied and Discharge Flow Rates - In response to public comments on the applied and discharge flow rates which form the bases of mass limitations, the Agency has reexamined all flow data in question in its applied flow data base. This review resulted in the adjustment of some of the median applied flow rates, and the resulting discharge flow rates that are based on the median applied flow rate and achievable recycle rate. The final applied flows and discharge flows for each process segment are shown in Table IX-1.

Model plant costs are estimated based on the flow rate of water recycled and treated at the model plant. In segments where the applied and discharge flows were changed based on review of the applied flow data base, model plant costs were adjusted to reflect those changes in applied and discharge flow. The above adjustments were made by developing cost curves for each treatment option in the segments where applied flow rates changed. Separate curves were developed for capital and annual costs. The cost estimated based on the unrevised applied flow rates for each employment size group within the segment were used to form the data points on a cost vs. flow curve. The revised costs were then estimated from the cost vs. flow curve based on the revised applied flow rates.

After making the above changes, EPA finalized its model plant treatment costs. Model plant costs for treatment options 1 through 5 are presented in Tables VIII-2 through VIII-6. Those tables present investment and annual costs for each of the different plant sizes within each subcategory segment.

Utilization Factors

Utilization factors were used to determine that portion of the model technologies that is already in-place. Utilization factors were calculated by examining all of the treatment-in-place survey data for plants within a particular subcategory, plant size, and discharge mode (cell). For example, if a settling tank is required in the treatment scheme of a particular treatment option, for a particular cell, and three out of the 10 plants in the survey data base for that cell report they have settling tanks in place, a utilization factor of 0.3 (3/10) was assigned

to settling tanks for that particular treatment option and cell. More effective unit operations can substitute for less effective unit operations in the calculation of utilization factors. For example, if a plant has a clarifier in place, but only a settling tank is required, the clarifier can substitute for the settling tank.

Utilization factors for recycle equipment such as pumps and piping are based on the percentage of plants with demonstrated recycle within each cell. This is an accurate estimate of treatment equipment in-place because most plants with recycle equipment in-place are recycling at or above the recycle rates that form the basis of discharge flow reduction in the model technology options. Those remaining plants recycling at rates slightly below the recycle rates that form the basis of discharge flow reduction may need to increase their recycle rate. However, as this will generally only require an approximate 5 to 15 percent increase in flow through existing equipment, EPA has assumed that existing equipment will be able to absorb this increase in capacity for the purposes of estimating levels of treatment in-place.

A complete list of the utilization factors used for the calculation of regulatory compliance costs and reference materials detailing acceptable treatment component substitutions for the purposes of calculating utilization factors are included in Section 22.43 of the record for this rulemaking.

Projected Number of Dischargers

The projected number of dischargers in each cell of the metal molding and casting category is presented in Table VIII-7. A summary of the procedure used to make these estimates follows. A detailed discussion of the statistical development of these estimates is provided in Section 22.25 of the record. The first step in estimating the projected number of dischargers was to tabulate the actual number of dischargers known to exist in the metal molding and casting data base. A data base to industry scale-up ratio was calculated for each subcategory/employment size group by dividing a projected distribution of wet plants in the industry calculated from 1984 Penton Census data by the distribution of wet plants in the metal molding and casting data base. The projected number of processes in the industry was then calculated by multiplying the distribution of processes in the metal molding and casting data base by the scale-up ratios just discussed.

Calculation of Industry Costs

To better illustrate the calculation of industry costs, a sample industry cost calculation follows.

Example Calculation: Option 3 (recycle, and chemical precipitation, settling, and filtration of blowdown) industry costs for the ferrous subcategory, dust collection scrubber process, 10-49 employees, indirect discharge model. The model plant costs for this particular option for this cell are presented in Table VIII-1. To calculate the total industry cost, the model plant cost is first broken down into two parts: an in-place cost that reflects the value of components already in-place and incremental costs associated with needed equipment that is not yet in-place. The breakdown of the model plant costs into in-place and incremental components is accomplished with the use of utilization factors. The utilization factors for the cell of interest are (see record, Section 22.43):

DT - 0
RTP-A - 0.8
BT4 - 0.2
MB4 - 0
CF - 0

The incremental portion of the model plant cost is calculated by multiplying the fraction of the model plant cost attributed to each individual component by one minus the utilization factor:

Investment Costs:

Component	Fraction of Model Plant Cost Attributed to Component	Utilization Factor (U.F.)	1-U.F.	Incremental Portion of Model Plant Cost
DT	0.58	0	1	0.58
RTP-A	0.20	0.8	0.2	0.04
BT4	0.09	0.2	0.8	0.07
MB4	0.06	0	1	0.06
CF	0.07	0	1	0.07
Total	1.00			0.82

Annual Costs:

Component	Fraction of Model Plant Cost Attributed to Component	Utilization Factor (U.F.)	1-U.F.	Incremental Portion of Model Plant Cost
DT	0.45	0	1	0.45
RTP-A	0.13	0.8	0.2	0.03
BT4	0.07	0.2	0.8	0.06
MB4	0.08	0	1	0.08
CF	0.10	0	1	0.10
Monitoring	0.17	-	1	0.17
Total	1.00			0.89

Thus, as shown in the above tables, 82 percent of the capital model plant cost for Option 3 treatment at a ferrous dust collection scrubber process with 10-49 employees is incremental, 18 percent of the cost is attributed to treatment in-place. At the same model plant, 89 percent of the annual model plant cost is incremental, 11 percent is associated with equipment in-place.

Industry costs are calculated by multiplying the incremental model plant costs by the projected number of dischargers in the cell of the industry represented by the model plant. The calculation of industry costs and associated impacts also accounts for cost savings through central treatment and the costs associated with segregating noncontact cooling water from process wastewater. The calculation of industry-wide compliance costs based on these factors is discussed in the Economic Analysis of Final Effluent Limitations Guidelines and Standards for the Metal Molding and Casting Industry (U.S. EPA, September 1985). A discussion of the methodology used to estimate segregation costs and central treatment cost savings follows.

Segregation Costs

The approach chosen to estimate segregation costs was to select a random sample set of 20 plants from the data base composed of data collection portfolios from metal molding and casting plants that use process water. Segregation costs were then estimated individually for each plant in the sample group, if required. The results of the random survey indicate that 30 percent of the plants in the category will incur an average increase of about 10 percent over base model plant investment costs as a result of wastewater segregation requirements. The method used to arrive at this conclusion is described in more detail below.

First, the sample set of 20 plants was selected at random from the DCP data base. This was done by obtaining a list of all 420 wet plants in the DCP data base, in order of plant code. Then a list of random numbers between one and 420 was obtained. For each random number i, the ith plant on the list of wet DCP's was

selected for review.

Six of the plants selected for review required segregation of noncontact cooling water. Those six plants, along with estimated segregation costs and the percent increase over a base model treatment system are presented in Table VIII-8. Estimated segregation costs are based on the following assumptions:

Case A: Foundry process water is directed to a storm drain or sewer that also collects noncontact waters, which are then discharged to surface water or to a POTW without treatment. Plants 04688, 22121, 28822, and 05333 were found to have such configurations. In this case costs were included for rerouting the process water from its source to a new treatment system, assumed to be 500 feet away, unless the DCP specified otherwise. Costs include:

- 500 feet of appropriately-sized PVC piping; pipe diameter provided was that necessary to accommodate 110 percent of the maximum wastewater flow volume at 2 to 3 feet per second
- 20 percent of installed cost for valves, elbows, fittings, etc.
- 3.7 to 4.8 labor hours per 100 feet of pipe for installation, depending on pipe size

Case B: Significant amounts of noncontact cooling water are treated along with foundry process waters in a common treatment system. Plants 10865 and 05117 had such configurations. In this case, costs were included for rerouting the noncontact cooling water around the treatment system, by continuing the existing noncontact cooling water line. In addition, costs were provided for new piping to take the process water from its process of origin to the treatment system. For plant 05117, this was PVC pipe, with costs similar to case A. For plant 10865, buried concrete pipe was required to continue the existing line; a similar arrangement was required for the process water because of the very high flow rates. This arrangement included:

- 500 feet of trench and concrete pipe required to reroute noncontact water around existing system; 1,000 feet required to carry the process water to the treatment system
- Costs for trench excavation, pipe installation, trench backfill, and grading were included
- Two standard headwalls, two wing-type headwalls, and two concrete manholes were provided.

All investment and labor costs were determined using Richardson Rapid Cost Estimation System (1980). The costs were scaled up to first-quarter 1983 dollars using the Chemical Engineering Magazine Economic Indicator Index (October 29, 1984). Finally, the following fees were added as a percentage of the total investment: engineering at 10 percent, contingency at 15 percent, and contractor's fee (overhead and profit) at 15 percent. Additional annual costs were assumed to be negligible.

Central Treatment Costs

Central treatment of wastewater generated by metal molding and casting operations is a viable and demonstrated treatment alternative at plants with more than one wet metal molding and casting process. To estimate the potential cost savings that can be obtained through central treatment of wastewater, the Agency has identified a cross section of five representative model plants with differing combinations of processes (raw waste characteristics) and sizes (economies of scale). Compliance costs based on a frequently used central treatment configuration have been developed for those segments.

The Agency calculated compliance costs based on central treatment for five combinations of process segments shown on Table VIII-9.

The combinations in Table VIII-9 are combinations of actual operations commonly found at plants within the respective subcategories.

The central treatment configuration for which compliance costs have been estimated consists of a combined recycle system where process water is collected from each segment, treated (settling, followed by either acid or caustic addition), and recycled back to the water intake manifold for each process. Blowdown from the combined recycle system is treated using lime and settle treatment technology. This configuration was chosen for the analysis of central treatment cost savings because it reflects most closely the physical configuration of existing metal molding and casting plants (especially large plants) with central treatment facilities. The compliance costs for this central treatment configuration were calculated in the same manner as the model plant costs. A detailed set of step-by-step calculations documenting these costs is available in Section 22.34 of the record.

Central treatment cost savings are presented in tabular form on Table VIII-9. In summary, central treatment consisting of combined recycle and blowdown treatment at multi-process metal molding and casting plants, provides an average 29 percent capital and 36 percent annual treatment cost savings over completely segregated treatment systems.

POLLUTANT REMOVAL ESTIMATES

The quantities of pollutants removed by each treatment option were estimated based on a similar methodology as used for cost estimation. Pollutant removals were estimated for the same model plants established for cost estimation. A model plant was established for the five employment size groups (less than 10 employees, 10-49 employees, 50-99 employees, 100-249 employees, and greater than 250 employees) in each process segment. EPA estimated total pollutant removal benefits by first estimating the mass of pollutants discharged by each model plant at each treatment option considered. By multiplying these estimates by the number of plants within the industry represented by a specific model, the mass discharges of the sections of the industry represented by each model were established. Pollutant removal benefits in going from current discharge levels to a discharge option considered, or in going from one treatment option to another were calculated by arithmetic difference once the pollutant masses discharged at each treatment level were calculated.

Pollutant mass discharges for each model plant were estimated as follows. The masses of pollutants in raw wastewater discharges were estimated based on the average normalized mass generation rate at sampled plants within each process segment (mass generation rates are presented in Tables V-30 through V-46). That is, the mass of pollutant generated per unit mass of metal poured, per unit mass of sand reclaimed, or per unit volume of wet scrubber air flow was calculated depending on the normalizing parameter of interest. This ratio of pollutant mass generated per unit of production or air flow was multiplied by the production or air flow for the respective model plant to obtain the annual pollutant mass generation rate.

The average pollutant mass discharge for each model plant at each treatment option level was calculated by multiplying the treatment effectiveness concentrations for each treatment option (as presented in Section VII) by the annual discharge flow of water at the respective model plant. The annual discharge flow of water was calculated by multiplying the normalized regulatory discharge flow rate (BPT flow) by the appropriate mean annual production or air flow.

The masses of pollutants currently discharged were estimated based on the masses of pollutants discharged in raw wastewater and the masses of pollutants discharged at Option 2 (recycle, lime and settle). A factor representing the current level of Option 2 treatment-in-place was developed for each model plant based on the ratio of in-place investment costs to total investment costs at Option 2. When this factor was multiplied by the pollutant removal achieved in going from raw waste to Option 2 effluent, an estimate of pollutant reduction achieved by current levels of treatment was obtained. These currently achieved pollutant removals were subtracted from the raw waste loads to obtain the currently discharged waste loads.

Calculations and data sheets documenting the pollutant removal benefit calculations are included in Section 22.67 of the record. The pollutant removal estimates for each treatment option are summarized in Table VIII-10.

ENERGY AND NON-WATER QUALITY IMPACTS

The following are the energy and non-water quality environmental impacts associated with the final effluent limitations guidelines and standards for the metal molding and casting category.

Energy Requirements

Estimates of the net increase in electrical energy consumption in each subcategory at each treatment option are presented in Table VIII-11. For comparison purposes, the total energy usage by plants in the metal molding and casting category in 1978 was estimated to be 31.3 billion kilowatt-hours.

EPA has determined the net increases in electrical energy consumption for each treatment option by multiplying the incremental energy consumption for each model plant at a treatment level of interest by the number of processes in the industry that the model plant represents. These model plant subtotals were then summed to obtain the total net increase in industry energy consumption.

The energy used by new direct and indirect discharging plants will be similar to the amounts used by existing sources with BAT level treatment and in compliance with PSES, respectively.

Air Pollution

None of the model processes or treatment technologies that form the bases of final effluent limitations guidelines and standards generate or contribute to the generation of any air pollutants. Therefore, there will be no impacts on air quality as a result of pollution control technologies recommended to achieve the promulgated levels of treatment.

Solid Waste

Estimates of the incremental increase in solid waste generation at each treatment option in each subcategory are presented in Table VIII-12.

EPA has estimated the incremental increases in solid waste generation by each treatment option by multiplying the incremental solid waste generation for each model plant at a treatment level of interest by the number of processes in the industry that the model plant represents. These model plant subtotals were then summed to obtain the total incremental increase in industry solid waste generation. EPA has assumed that the solid waste generation rates at new direct and indirect discharging plants will be similar to the amounts generated by

existing sources at BAT level treatment and in compliance with PSES, respectively.

The Agency examined the solid wastes that would be generated by metal molding and casting processes using the model treatment technologies and has concluded that they are not hazardous under Section 3001 of the Resource Conservation and Recovery Act (RCRA). This judgement is based on a review of the results of extensive Extraction Procedure (EP) toxicity tests that were conducted on metal molding and casting solid wastes (See Sampling and Analysis of Wastes Generated by Gray Iron Foundries, Environmental Protection Agency, EPA 600/4-81-028, Washington, D.C., April 1981; and also Harn, R. K., W. C. Boyle, and F. J. Blaha, "Leachate and Groundwater Quality In and Around Ferrous Foundry Landfills and Comparisons to Leach Test Results," American Foundryman's Society, Des Plaines, Illinois, January, 1985). None of the pollutants for which the extracts in the EP test are analyzed were found consistently in metal molding and casting sludges above the allowable concentration (i.e., the concentration that makes the waste hazardous). Metal molding and casting wastes are also not listed currently as hazardous under 40 CFR Part 261.11 (45 FR 33121, May 19, 1980; as amended by 45 FR 76624, November 19, 1980). For the above reasons, EPA has not developed estimates of the costs to dispose of hazardous solid wastes. EPA has included costs for nonhazardous waste disposal of $21.00/ton for sludges and $28.60/ton for oily wastes generated in treating metal molding and casting wastewaters.

Although it is the Agency's view that solid wastes generated as a result of these regulations are not expected to be classified as hazardous under the regulations implementing Subtitle C of RCRA, individual generators of these wastes must test the wastes to determine if they meet any of the characteristics of hazardous wastes. See 40 CFR Part 262.11 (45 FR 12732-12733, February 26, 1980).

Should any metal molding and casting wastes be identified as hazardous, they will come within the scope of RCRA's "cradle to grave" hazardous waste management program, requiring regulation from the point of generation to the point of final disposition. EPA's generator standards require generators of hazardous wastes to meet containerization, labeling, recordkeeping, and reporting requirements. If metal molding and casting facilities dispose of hazardous wastes off-site, they would have to prepare a manifest that tracks the movement of the wastes from the generator's premises to an appropriate off-site treatment, storage, or disposal facility. See 40 CFR Part 262.20 (45 FR 33142, May 19, 1980; as amended at 40 FR 86973, December 31, 1980). The transporter regulations require transporters of hazardous wastes to comply with the manifest system to ensure that the wastes are delivered to a permitted facility. See 40 CFR Part 263.20 (45 FR 33142, May 19, 1980; as amended at 45 FR 86973, December 31, 1980). Finally, RCRA regulations establish standards for hazardous waste treatment, storage, and disposal facilities allowed to receive such wastes. See 40 CFR Parts 264 and 265 (46

FR 2802, January 12, 1981; 47 FR 32274, July 26, 1982).

Even though metal molding and casting wastes are not identified as hazardous, they still must be disposed of in a manner that will not violate the open dumping prohibition of Section 4005 of RCRA. The Agency has calculated, as part of the costs for wastewater treatment, the cost of model plants of hauling and disposing of these wastes (using the unit costs noted above) in accordance with this requirement.

Consumptive Water Loss

Table VIII-13 presents the evaporative water losses that EPA projects will result from the application of high rate recycle in the metal molding and casting category. The evaporative losses were estimated based on an assumed 2 percent loss due to evaporation and drift in those process segments that require cooling towers.

Table VIII-1

METAL MOLDING AND CASTING INDUSTRY GUIDELINES MODEL COSTS
(First Quarter 1983 Dollars)

Metal Category:	Ferrous	Option No.:	3
Employee Group:	10-49	Shifts:	1
Process(es):	Dust Collection	Air Flow (1,000 scfm):	28.4

Treatment Step	A	B	C	D	E	Model Cost Totals
Treatment Component	DT	RTP-A	BT4	MB4	CF	
Flow (gpm)	85	82.5	2.50	2.50	2.50	
Investment Costs	74,330	25,740	11,400	6,960	8,650	127,080
Annual Costs:						
Capital	5,950	2,060	910	560	X	9,480
Depreciation	7,430	2,570	1,140	700	X	11,840
O&M	6,940	3,160	1,250	2,040	X	13,390
Energy	50	300	0	10	X	360
Sludge Disposal	4,520	0	440	0	X	4,960
Oil Disposal	0	0	10	0	X	10
Chemical	0	20	0	150	X	170
Monitoring (Lab)						2,760
Totals	24,890	8,110	3,750	3,460	2,480	45,450[a]

Key: X - Values were not itemized.
[a]Total includes monitoring costs.

DT - Drag Tank
RTP-A - Recycle to process, acid addition
MB4 - Mixer
BT4 - Batch settling tank (4 hour retention)
CF - Cartridge filter

TABLE VIII-2

MODEL PLANT COSTS - OPTION 1

ALUMINUM SUBCATEGORY
FIRST QUARTER 1983 DOLLARS

SEGMENT - NUMBER OF EMPLOYEES	INVESTMENT COSTS*	ANNUAL COSTS**
ALUMINUM CASTING CLEANING		
10-49	26230	4200
100-249	59410	9440
250+	36990	5050
ALUMINUM CASTÍNG QUENCH		
<10	26160	8140
10-49	26000	6660
50-99	28480	9130
100-249	55970	9430
250+	59790	11510
ALUMINUM DIE CASTING		
10-49		
50-99		
100-249		
250+		
ALUMINUM DUST COLLECTION		
10-49	44630	6110
100-249	44630	7300
250+	64260	8170
ALUMINUM GRINDING SCRUBBER		
100-249	26000	4310
250+	26620	4630
ALUMINUM INVESTMENT CASTING		
10-49	48370	7910
100-249	71410	10840
250+	228230	32910
ALUMINUM MELTING FURNACE SCRUBBER		
<10	42930	8770
10-49	42930	8490
50-99	42930	9610
100-249	174920	25590
250+	440590	79740
ALUMINUM MOLD COOLING		
<10	87460	14980
10-49	48810	9800
50-99	88020	14320
100-249	138320	19360
250+	70490	12160

*Investment costs include installed equipment, contingency, engineering, and contractor fees.
**Annual costs include operation and maintenence labor and materials, sludge and oil disposal, energy, chemicals, and monitoring.

TABLE VIII-2 continued

MODEL PLANT COSTS - OPTION 1

COPPER SUBCATEGORY
FIRST QUARTER 1983 DOLLARS

SEGMENT - NUMBER OF EMPLOYEES	INVESTMENT COSTS*	ANNUAL COSTS**
COPPER CASTING QUENCH		
<10	29700	6840
10-49	113430	18090
50-99	90750	13960
100-249	195400	39140
250+	70240	12920
COPPER DIRECT CHILL CASTING		
<10	160740	30990
10-49	236660	47350
50-99	571390	134710
100-249	985750	248480
250+	1264430	327280
COPPER DUST COLLECTION		
10-49	117690	22580
50-99	63960	11700
100-249	164300	43880
250+	46740	10200
COPPER GRINDING SCRUBBER		
50-99	26930	4440
100-249	26000	4770
250+	26930	4860
COPPER INVESTMENT CASTING		
100-249	56450	8850
COPPER MELTING FURNACE SCRUBBER		
50-99	83730	14740
250+	246990	60340
COPPER MOLD COOLING		
<10	66590	13900
10-49	369040	68760
50-99	271945	50640
100-249	707204	125060
250+	203980	38040

*Investment costs include installed equipment, contingency, engineering, and contractor fees.
**Annual costs include operation and maintenence labor and materials, sludge and oil disposal, energy, chemicals, and monitoring.

TABLE VIII-2 continued

MODEL PLANT COSTS - OPTION 1

FERROUS SUBCATEGORY
FIRST QUARTER 1983 DOLLARS

SEGMENT - NUMBER OF EMPLOYEES	INVESTMENT COSTS*	ANNUAL COSTS**
FERROUS CASTING CLEANING		
<10	28950	4360
50-99	26090	3950
100-249	55100	6760
250+	107050	15350
FERROUS CASTING QUENCH		
10-49	37810	6300
50-99	81380	13150
100-249	142580	25960
250+	175930	29520
FERROUS DUST COLLECTION		
10-49		
50-99		
100-249		
250+		
FERROUS GRINDING SCRUBBER		
10-49	43040	5760
50-99	65250	7780
100-249	157020	22110
250+	229680	30970
FERROUS INVESTMENT CASTING		
10-49	27980	5120
FERROUS MELTING FURNACE SCRUBBER		
<10	182800	24340
10-49	239970	32900
50-99	182800	23120
100-249	283170	39370
250+	797135	135930
FERROUS MOLD COOLING		
100-249	359700	37880
250+	339730	47850
FERROUS SLAG QUENCH		
10-49	54280	8870
50-99	53780	8700
100-249	137900	23470
250+	276710	74470
FERROUS WET SAND RECLAMATION		
100-249		
250+		

*Investment costs include installed equipment, contingency, engineering, and contractor fees.
**Annual costs include operation and maintenence labor and materials, sludge and oil disposal, energy, chemicals, and monitoring.

TABLE VIII-2 continued

MODEL PLANT COSTS - OPTION 1

MAGNESIUM SUBCATEGORY
FIRST QUARTER 1983 DOLLARS

SEGMENT - NUMBER OF EMPLOYEES	INVESTMENT COSTS*	ANNUAL COSTS**
MAGNESIUM CASTING QUENCH		
10-49	26550	6120
50-99	48860	10100
MAGNESIUM DUST COLLECTION		
10-49	34340	5160
MAGNESIUM GRINDING SCRUBBER		
<10	34340	5320
10-49	34340	5100

*Investment costs include installed equipment, contingency, engineering, and contractor fees.
**Annual costs include operation and maintenence labor and materials, sludge and oil disposal, energy, chemicals, and monitoring.

TABLE VIII-2 continued

MODEL PLANT COSTS - OPTION 1

ZINC SUBCATEGORY
FIRST QUARTER 1983 DOLLARS

SEGMENT - NUMBER OF EMPLOYEES	INVESTMENT COSTS*	ANNUAL COSTS**
ZINC CASTING QUENCH		
<10	26430	4600
10-49	33820	6040
50-99	36130	6280
100-249	51300	10450
250+	38740	6320
ZINC DIE CASTING		
10-49		
50-99		
100-249		
250+		
ZINC MELTING FURNACE SCRUBBER		
50-99	139500	18940
100-249	79460	10190
250+	69720	8840
ZINC MOLD COOLING		
10-49	56000	5660
50-99	65220	5660
100-249	101910	17650
250+	92700	14590

*Investment costs include installed equipment, contingency, engineering, and contractor fees.
**Annual costs include operation and maintenence labor and materials, sludge and oil disposal, energy, chemicals, and monitoring.

TABLE VIII-3

MODEL PLANT COSTS - OPTION 2

ALUMINUM SUBCATEGORY
FIRST QUARTER 1983 DOLLARS

SEGMENT - NUMBER OF EMPLOYEES	INVESTMENT COSTS*	ANNUAL COSTS**
ALUMINUM CASTING CLEANING		
10-49	32630	4890
100-249	65990	17810
250+	43430	6690
ALUMINUM CASTING QUENCH		
<10	32560	8680
10-49	32400	7480
50-99	34880	9610
100-249	62370	11150
250+	66190	15570
ALUMINUM DIE CASTING		
10-49	27820	15930
50-99	37830	18510
100-249	40710	25930
250+	55690	34840
ALUMINUM DUST COLLECTION		
10-49	51290	9650
100-249	51290	10770
250+	71580	14570
ALUMINUM GRINDING SCRUBBER		
100-249	32400	5110
250+	33020	5110
ALUMINUM INVESTMENT CASTING		
10-49	54310	9500
100-249	79220	12650
250+	244380	33470
ALUMINUM MELTING FURNACE SCRUBBER		
<10	52710	15990
10-49	52710	15570
50-99	52710	19820
100-249	184750	35600
250+	482420	92210
ALUMINUM MOLD COOLING		
<10	93240	20520
10-49	55620	12570
50-99	93780	19580
100-249	139950	28030
250+	77020	16080

*Investment costs include installed equipment, contingency, engineering, and contractor fees.
**Annual costs include operation and maintenence labor and materials, sludge and oil disposal, energy, chemicals, and monitoring.

TABLE VIII-3 continued

MODEL PLANT COSTS - OPTION 2

COPPER SUBCATEGORY
FIRST QUARTER 1983 DOLLARS

SEGMENT - NUMBER OF EMPLOYEES	INVESTMENT COSTS*	ANNUAL COSTS**
COPPER CASTING QUENCH		
<10	36100	7400
10-49	119880	23670
50-99	97150	19510
100-249	202220	47370
250+	76640	15780
COPPER DIRECT CHILL CASTING		
<10	168500	36390
10-49	246270	53420
50-99	584730	139100
100-249	998370	253560
250+	1274590	332900
COPPER DUST COLLECTION		
10-49	126090	26020
50-99	70810	15100
100-249	174200	50510
250+	53270	13500
COPPER GRINDING SCRUBBER		
50-99	33330	5260
100-249	32400	5600
250+	33330	5870
COPPER INVESTMENT CASTING		
100-249	63080	10580
COPPER MELTING FURNACE SCRUBBER		
50-99	93240	21430
250+	280710	70870
COPPER MOLD COOLING		
<10	70420	18530
10-49	380910	75590
50-99	281920	57600
100-249	723340	128640
250+	212330	44290

*Investment costs include installed equipment, contingency, engineering, and contractor fees.
**Annual costs include operation and maintenence labor and materials, sludge and oil disposal, energy, chemicals, and monitoring.

TABLE VIII-3 continued

MODEL PLANT COSTS - OPTION 2

FERROUS SUBCATEGORY
FIRST QUARTER 1983 DOLLARS

SEGMENT - NUMBER OF EMPLOYEES	INVESTMENT COSTS*	ANNUAL COSTS**
FERROUS CASTING CLEANING		
<10	35350	4950
50-99	32490	4510
100-249	61630	9830
250+	114270	20800
FERROUS CASTING QUENCH		
10-49	44210	7110
50-99	87780	18720
100-249	149200	28920
250+	182700	34470
FERROUS DUST COLLECTION		
10-49	118430	21610
50-99	138330	25070
100-249	221450	69160
250+	643460	235360
FERROUS GRINDING SCRUBBER		
10-49	49450	8830
50-99	71890	10790
100-249	164760	28000
250+	237980	31610
FERROUS INVESTMENT CASTING		
10-49	31940	6280
FERROUS MELTING FURNACE SCRUBBER		
<10	195690	27600
10-49	261220	36980
50-99	195690	26350
100-249	293260	43770
250+	850580	155390
FERROUS MOLD COOLING		
100-249	368190	40650
250+	348030	49230
FERROUS SLAG QUENCH		
10-49	60850	11930
50-99	60340	11710
100-249	145730	26660
250+	286780	75530
FERROUS WET SAND RECLAMATION		
100-249	148500	28010
250+	862420	218950

*Investment costs include installed equipment, contingency, engineering, and contractor fees.
**Annual costs include operation and maintenence labor and materials, sludge and oil disposal, energy, chemicals, and monitoring.

TABLE VIII-3 continued

MODEL PLANT COSTS - OPTION 2

MAGNESIUM SUBCATEGORY
FIRST QUARTER 1983 DOLLARS

SEGMENT - NUMBER OF EMPLOYEES	INVESTMENT COSTS*	ANNUAL COSTS**
MAGNESIUM CASTING QUENCH		
10-49	32950	6950
50-99	55260	11100
MAGNESIUM DUST COLLECTION		
10-49	40740	5980
MAGNESIUM GRINDING SCRUBBER		
<10	40740	6170
10-49	40740	5980

*Investment costs include installed equipment, contingency, engineering, and contractor fees.
**Annual costs include operation and maintenence labor and materials, sludge and oil disposal, energy, chemicals, and monitoring.

TABLE VIII-3 continued

MODEL PLANT COSTS - OPTION 2

ZINC SUBCATEGORY
FIRST QUARTER 1983 DOLLARS

SEGMENT - NUMBER OF EMPLOYEES	INVESTMENT COSTS*	ANNUAL COSTS**
ZINC CASTING QUENCH		
<10	32830	5750
10-49	40220	7780
50-99	42530	7990
100-249	57750	14810
250+	45140	9210
ZINC DIE CASTING		
10-49	27600	16570
50-99	30180	18090
100-249	43150	34490
250+	32910	18980
ZINC MELTING FURNACE SCRUBBER		
50-99	149240	29640
100-249	82060	16980
250+	71980	14260
ZINC MOLD COOLING		
10-49	61990	6460
50-99	71520	8780
100-249	108830	22460
250+	99560	17960

*Investment costs include installed equipment, contingency, engineering, and contractor fees.
**Annual costs include operation and maintenence labor and materials, sludge and oil disposal, energy, chemicals, and monitoring.

TABLE VIII-4

MODEL PLANT COSTS - OPTION 3

ALUMINUM SUBCATEGORY
FIRST QUARTER 1983 DOLLARS

SEGMENT - NUMBER OF EMPLOYEES	INVESTMENT COSTS*	ANNUAL COSTS**
ALUMINUM CASTING CLEANING		
10-49	34680	6770
100-249	74350	21140
250+	46350	9070
ALUMINUM CASTING QUENCH		
<10	34600	12530
10-49	34440	8840
50-99	37120	12250
100-249	64820	13700
250+	68840	18130
ALUMINUM DIE CASTING		
10-49	29860	17500
50-99	40040	21290
100-249	42950	29100
250+	58340	38070
ALUMINUM DUST COLLECTION		
10-49	54140	11680
100-249	54140	13250
250+	76760	17230
ALUMINUM GRINDING SCRUBBER		
100-249		
250+		
ALUMINUM INVESTMENT CASTING		
10-49	64660	12420
100-249	93450	17660
250+	280610	47300
ALUMINUM MELTING FURNACE SCRUBBER		
<10	56340	21620
10-49	56340	17790
50-99	56340	22980
100-249	207060	44500
250+	514550	106770
ALUMINUM MOLD COOLING		
<10	99840	28130
10-49	58800	14670
50-99	100410	22990
100-249	151340	31050
250+	82070	18850

*Investment costs include installed equipment, contingency, engineering, and contractor fees.
**Annual costs include operation and maintenence labor and materials, sludge and oil disposal, energy, chemicals, and monitoring.

TABLE VIII-4 continued

MODEL PLANT COSTS - OPTION 3

COPPER SUBCATEGORY
FIRST QUARTER 1983 DOLLARS

SEGMENT - NUMBER OF EMPLOYEES	INVESTMENT COSTS*	ANNUAL COSTS**
COPPER CASTING QUENCH		
<10	38140	11100
10-49	125450	25020
50-99	100460	22170
100-249	212320	50910
250+	79290	18350
COPPER DIRECT CHILL CASTING		
<10	184840	52050
10-49	267450	60090
50-99	620680	160890
100-249	1044880	282110
250+	1325390	355300
COPPER DUST COLLECTION		
10-49	134260	28260
50-99	74120	18120
100-249	183740	55670
250+	55720	17580
COPPER GRINDING SCRUBBER		
50-99		
100-249		
250+		
COPPER INVESTMENT CASTING		
100-249	74820	14510
COPPER MELTING FURNACE SCRUBBER		
50-99	103000	25800
250+	304460	81050
COPPER MOLD COOLING		
<10	75750	27930
10-49	407550	85310
50-99	301920	70180
100-249	772330	148210
250+	227600	53340

*Investment costs include installed equipment, contingency, engineering, and contractor fees.
**Annual costs include operation and maintenence labor and materials, sludge and oil disposal, energy, chemicals, and monitoring.

TABLE VIII-4 continued

MODEL PLANT COSTS - OPTION 3

FERROUS SUBCATEGORY
FIRST QUARTER 1983 DOLLARS

SEGMENT - NUMBER OF EMPLOYEES	INVESTMENT COSTS*	ANNUAL COSTS**
FERROUS CASTING CLEANING		
<10	37590	8590
50-99	34540	6460
100-249	69515	12630
250+	135710	28360
FERROUS CASTING QUENCH		
10-49	46450	9150
50-99	91090	22100
100-249	157850	32850
250+	192530	39250
FERROUS DUST COLLECTION		
10-49	127080	24130
50-99	147980	29800
100-249	243180	79320
250+	674360	254840
FERROUS GRINDING SCRUBBER		
10-49	53850	11090
50-99	80640	14220
100-249	187650	37100
250+	262600	42180
FERROUS INVESTMENT CASTING		
10-49	38520	8020
FERROUS MELTING FURNACE SCRUBBER		
<10	213960	40960
10-49	282930	44020
50-99	213960	33850
100-249	317250	53930
250+	889990	175320
FERROUS MOLD COOLING		
100-249	393390	51670
250+	372650	59600
FERROUS SLAG QUENCH		
10-49	69120	14320
50-99	68510	15030
100-249	168910	35830
250+	316460	88860
FERROUS WET SAND RECLAMATION		
100-249	174030	38540
250+	947340	259260

*Investment costs include installed equipment, contingency, engineering, and contractor fees.
**Annual costs include operation and maintenence labor and materials, sludge and oil disposal, energy, chemicals, and monitoring.

TABLE VIII-4 continued

MODEL PLANT COSTS - OPTION 3

MAGNESIUM SUBCATEGORY
FIRST QUARTER 1983 DOLLARS

SEGMENT - NUMBER OF EMPLOYEES	INVESTMENT COSTS*	ANNUAL COSTS**
MAGNESIUM CASTING QUENCH		
10-49	34980	8580
50-99	57700	13830
MAGNESIUM DUST COLLECTION		
10-49	42980	8030
MAGNESIUM GRINDING SCRUBBER		
<10		
10-49		

*Investment costs include installed equipment, contingency, engineering, and contractor fees.
**Annual costs include operation and maintenence labor and materials, sludge and oil disposal, energy, chemicals, and monitoring.

TABLE VIII-4 continued

MODEL PLANT COSTS - OPTION 3

ZINC SUBCATEGORY
FIRST QUARTER 1983 DOLLARS

SEGMENT - NUMBER OF EMPLOYEES	INVESTMENT COSTS*	ANNUAL COSTS**
ZINC CASTING QUENCH		
<10	34870	8990
10-49	42460	9820
50-99	44870	10570
100-249	61060	17720
250+	47790	11570
ZINC DIE CASTING		
10-49	29640	18130
50-99	32240	20790
100-249	45410	38030
250+	35020	21290
ZINC MELTING FURNACE SCRUBBER		
50-99	164510	32140
100-249	92350	18310
250+	81320	15340
ZINC MOLD COOLING		
10-49	64460	7790
50-99	74890	11140
100-249	116310	27930
250+	105940	22220

*Investment costs include installed equipment, contingency, engineering, and contractor fees.
**Annual costs include operation and maintenence labor and materials, sludge and oil disposal, energy, chemicals, and monitoring.

TABLE VIII-5

MODEL PLANT COSTS - OPTION 4

ALUMINUM SUBCATEGORY
FIRST QUARTER 1983 DOLLARS

SEGMENT - NUMBER OF EMPLOYEES	INVESTMENT COSTS*	ANNUAL COSTS**
ALUMINUM CASTING CLEANING		
10-49		
100-249		
250+		
ALUMINUM CASTING QUENCH		
<10	45020	17130
10-49	44750	12320
50-99	47430	15910
100-249	77300	17490
250+	82460	21890
ALUMINUM DIE CASTING		
10-49	40910	21040
50-99	51170	25020
100-249	54290	32790
250+	71960	41830
ALUMINUM DUST COLLECTION		
10-49		
100-249		
250+		
ALUMINUM GRINDING SCRUBBER		
100-249		
250+		
ALUMINUM INVESTMENT CASTING		
10-49	81330	16940
100-249	116430	23140
250+	339560	53830
ALUMINUM MELTING FURNACE SCRUBBER		
<10		
10-49		
50-99		
100-249		
250+		
ALUMINUM MOLD COOLING		
<10	119220	33140
10-49	73250	18320
50-99	119860	26970
100-249	174820	34610
250+	99570	22640

*Investment costs include installed equipment, contingency, engineering, and contractor fees.
**Annual costs include operation and maintenence labor and materials, sludge and oil disposal, energy, chemicals, and monitoring.

TABLE VIII-5 continued

MODEL PLANT COSTS - OPTION 4

COPPER SUBCATEGORY
FIRST QUARTER 1983 DOLLARS

SEGMENT - NUMBER OF EMPLOYEES	INVESTMENT COSTS*	ANNUAL COSTS**
COPPER CASTING QUENCH		
<10	48790	15720
10-49	144210	30110
50-99	116480	30650
100-249	233570	60730
250+	92910	22110
COPPER DIRECT CHILL CASTING		
<10		
10-49		
50-99		
100-249		
250+		
COPPER DUST COLLECTION		
10-49		
50-99		
100-249		
250+		
COPPER GRINDING SCRUBBER		
50-99		
100-249		
250+		
COPPER INVESTMENT CASTING		
100-249		
COPPER MELTING FURNACE SCRUBBER		
50-99		
250+		
COPPER MOLD COOLING		
<10	88760	34190
10-49	456960	95850
50-99	341190	80030
100-249	851520	161350
250+	259100	61630

*Investment costs include installed equipment, contingency, engineering, and contractor fees.

**Annual costs include operation and maintenence labor and materials, sludge and oil disposal, energy, chemicals, and monitoring.

TABLE VIII-5 continued

MODEL PLANT COSTS - OPTION 4

FERROUS SUBCATEGORY
FIRST QUARTER 1983 DOLLARS

SEGMENT - NUMBER OF EMPLOYEES	INVESTMENT COSTS*	ANNUAL COSTS**
FERROUS CASTING CLEANING		
<10		
50-99		
100-249		
250+		
FERROUS CASTING QUENCH		
10-49		
50-99		
100-249		
250+		
FERROUS DUST COLLECTION		
10-49	147880	28420
50-99	169080	35320
100-249	265420	89930
250+	733640	261100
FERROUS GRINDING SCRUBBER		
10-49		
50-99		
100-249		
250+		
FERROUS INVESTMENT CASTING		
10-49	49120	11510
FERROUS MELTING FURNACE SCRUBBER		
<10	238120	56200
10-49	312620	56780
50-99	238120	46000
100-249	350860	67710
250+	960570	181920
FERROUS MOLD COOLING		
100-249		
250+		
FERROUS SLAG QUENCH		
10-49		
50-99		
100-249		
250+		
FERROUS WET SAND RECLAMATION		
100-249	224180	43310
250+	1106240	276950

*Investment costs include installed equipment, contingency, engineering, and contractor fees.
**Annual costs include operation and maintenence labor and materials, sludge and oil disposal, energy, chemicals, and monitoring.

TABLE VIII-5 continued

MODEL PLANT COSTS - OPTION 4

MAGNESIUM SUBCATEGORY
FIRST QUARTER 1983 DOLLARS

SEGMENT - NUMBER OF EMPLOYEES	INVESTMENT COSTS*	ANNUAL COSTS**
MAGNESIUM CASTING QUENCH		
10-49	45400	12070
50-99	70180	17690
MAGNESIUM DUST COLLECTION		
10-49		
MAGNESIUM GRINDING SCRUBBER		
<10		
10-49		

*Investment costs include installed equipment, contingency, engineering, and contractor fees.
**Annual costs include operation and maintenence labor and materials, sludge and oil disposal, energy, chemicals, and monitoring.

TABLE VIII-5 continued

MODEL PLANT COSTS - OPTION 4

ZINC SUBCATEGORY
FIRST QUARTER 1983 DOLLARS

SEGMENT - NUMBER OF EMPLOYEES	INVESTMENT COSTS*	ANNUAL COSTS**
ZINC CASTING QUENCH		
<10	45410	13610
10-49	53800	13390
50-99	56780	14370
100-249	77080	21600
250+	61410	15330
ZINC DIE CASTING		
10-49	40690	21670
50-99	43290	24510
100-249	56860	41720
250+	46070	24820
ZINC MELTING FURNACE SCRUBBER		
50-99	184120	41670
100-249	104980	25170
250+	92720	21440
ZINC MOLD COOLING		
10-49	79440	10790
50-99	91100	14960
100-249	136160	33790
250+	125030	27450

*Investment costs include installed equipment, contingency, engineering, and contractor fees.
**Annual costs include operation and maintenence labor and materials, sludge and oil disposal, energy, chemicals, and monitoring.

TABLE VIII-6

MODEL PLANT COSTS - OPTION 5

ALL SUBCATEGORIES
FIRST QUARTER 1983 DOLLARS

SEGMENT - NUMBER OF EMPLOYEES	INVESTMENT COSTS*	ANNUAL COSTS**
ALUMINUM GRINDING SCRUBBER		
100-249	20600	2540
250+	21240	2350
COPPER GRINDING SCRUBBER		
50-99	21560	2410
100-249	20600	3200
250+	21560	3250
FERROUS GRINDING SCRUBBER		
10-49	37620	3970
50-99	57550	6310
100-249	143050	19540
250+	215310	28200
MAGNESIUM GRINDING SCRUBBER		
<10	29100	3120
10-49	29100	3120

*Investment costs include installed equipment, contingency, engineering, and contractor fees.
**Annual costs include operation and maintenence labor and materials, sludge and oil disposal, energy, and chemicals. No monitoring costs are included at option 5.

Table VIII-7

PROJECTED NUMBER OF ACTIVE WET PROCESSES IN THE METAL MOLDING AND CASTING INDUSTRY

Metal	Segment	Employee Group	Process	Direct	Indirect	No Discharge	Total
Aluminum	N.A.	<10	CQ	7	0	6	13
			MFS	6	0	0	6
			MC	6	0	0	6
		10-49	CC	5	0	0	5
			CQ	5	28	18	51
			DC	5	25	35	65
			IC	0	5	0	5
			MFS	0	5	0	5
			MC	0	10	0	10
			UC	0	5	0	5
		50-99	CQ	5	11	2	18
			DC	2	18	4	24
			MFS	2	0	0	2
			MC	4	6	0	10
		100-249	CC	4	0	0	4
			CQ	10	11	0	21
			DC	3	27	9	39
			IC	4	0	0	4
			MFS	3	3	0	6
			MC	3	9	0	12
			GS	4	0	0	4
			UC	6	0	0	6
		250+	CC	0	2	0	2
			CQ	5	3	2	10
			DC	4	6	2	12
			IC	2	0	0	2
			MFS	2	0	0	2
			MC	6	6	0	12
			GS	0	3	0	3
			UC	0	2	0	2
Copper	N.A.	<10	CQ	11	11	0	22
			DCC	5	0	0	5
			MC	0	5	0	5

Table VIII-7 (Continued)

PROJECTED NUMBER OF ACTIVE WET PROCESSES IN THE METAL MOLDING AND CASTING INDUSTRY

Metal	Segment	Employee Group	Process	Direct	Indirect	No Discharge	Total
Copper	N.A.	10-49	CQ	12	20	0	32
			DCC	4	0	0	4
			UC	8	4	0	12
			MC	4	8	4	16
		50-99	CQ	5	3	3	11
			DCC	5	0	0	5
			UC	5	0	8	13
			GS	0	0	2	2
			MFS	0	0	2	2
			MC	2	3	0	5
		100-249	CQ	3	0	0	3
			DCC	6	0	0	6
			UC	3	0	3	6
			IC	0	3	0	3
			GS	0	6	3	9
			MC	3	0	0	3
		250+	CQ	1	3	0	4
			DCC	2	0	0	2
			UC	0	1	1	2
			GS	0	2	0	2
			MFS	1	0	1	2
			MC	2	2	0	4
Ferrous	Ductile	<10	None				
		10-49	UC	0	5	5	10
			GS	0	5	5	10
		50-99	UC	0	0	3	3
			GS	0	0	3	3
			MFS	0	3	3	6
		100-249	CQ	8	0	0	8
			UC	8	11	0	19
			MC	8	3	0	11
			MFS	8	3	3	14
			SQ	11	6	0	17

Table VIII-7 (Continued)

PROJECTED NUMBER OF ACTIVE WET PROCESSES IN THE METAL MOLDING AND CASTING INDUSTRY

Metal	Segment	Employee Group	Process	Direct	Indirect	No Discharge	Total
Ferrous	Ductile	250+	CC	1	0	0	1
			CQ	5	0	0	5
			UC	9	1	6	16
			GS	3	0	0	3
			MC	3	0	1	4
			MFS	6	1	2	9
			SQ	7	1	2	10
			WSR	1	0	0	1
	Gray	<10	MFS	0	2	2	4
		10-49	UC	10	20	5	35
			MFS	10	25	30	65
			SQ	5	0	0	5
		50-99	CQ	0	3	0	3
			UC	8	19	8	35
			GS	0	0	3	3
			MFS	8	16	19	43
			SQ	3	8	3	14
		100-249	CC	3	3	3	9
			CQ	3	3	5	11
			UC	24	35	27	86
			GS	0	8	3	11
			MC	3	0	0	3
			MFS	19	27	24	70
			SQ	13	19	16	48
		250+	CC	5	1	1	7
			CQ	1	2	0	3
			UC	25	23	21	69
			GS	5	1	4	10
			MC	4	1	0	5
			MFS	13	15	14	42
			SQ	21	17	7	45
			WSR	5	5	0	10
	Malleable	<10	None				
		10-49	None				

Table VIII-7 (Continued)

PROJECTED NUMBER OF ACTIVE WET PROCESSES IN THE METAL MOLDING AND CASTING INDUSTRY

Metal	Segment	Employee Group	Process	Direct	Indirect	No Discharge	Total
Ferrous	Malleable	50-99	UC	3	0	5	8
			MFS	0	3	3	6
			SQ	3	3	0	6
		100-249	CQ	0	3	0	3
			CC	3	0	0	3
			UC	11	16	5	32
			GS	0	5	0	5
			MFS	0	3	0	3
			SQ	0	5	0	5
		250+	CC	0	0	1	1
			CQ	4	1	1	6
			UC	5	2	8	15
			GS	2	0	0	2
			MFS	4	2	1	7
			SQ	5	0	1	6
	Steel	<10	CC	2	0	0	2
		10-49	CQ	0	5	5	10
			IC	0	5	0	5
		50-99	CC	3	5	0	8
			CQ	8	14	0	22
			UC	0	8	6	14
		100-249	CC	3	0	0	3
			CQ	14	11	6	31
			UC	11	11	8	30
			GS	0	0	3	3
			MFS	3	0	3	6
			WSR	6	0	0	6
		250+	CQ	8	13	2	23
			UC	6	8	7	21
			GS	1	0	0	1
			MC	0	0	1	1
			SQ	0	2	0	2
			WSR	4	2	0	6

Table VIII-7 (Continued)

PROJECTED NUMBER OF ACTIVE WET PROCESSES IN THE METAL MOLDING AND CASTING INDUSTRY

Metal	Segment	Employee Group	Process	Direct	Indirect	No Discharge	Total
Magnesium	N.A.	<10	GS	0	0	1	1
		10-49	CQ	2	0	0	2
			UC	0	2	0	2
			GS	0	2	0	2
		50-99	CQ	0	0	1	1
Zinc		<10	CQ	0	2	0	2
			DC	0	0	2	2
		10-49	CQ	0	15	0	15
			DC	0	8	6	14
			MC	0	6	0	6
		50-99	CQ	0	9	2	11
			DC	0	4	2	6
			MFS	0	2	0	2
			MC	0	2	0	2
		100-249	CQ	7	10	2	19
			DC	4	6	4	14
			MFS	3	7	2	12
			MC	2	0	6	8
		250+	CQ	2	4	1	7
			DC	0	1	2	3
			MFS	0	1	0	1
			MC	1	0	1	2

Key:

Process Code	Process	Process Code	Process
CC	Casting cleaning	IC	Investment casting
CQ	Casting quench	MFS	Melting furnace scrubber
DCC	Direct chill casting	MC	Mold cooling
DC	Die casting	SQ	Slag quench
UC	Dust collection	WSR	Wet sand reclamation
GS	Grinding scrubber		

Table VIII-8

ESTIMATED INSTALLED CAPITAL COSTS FOR SEGREGATION OF NONCONTACT COOLING WATER**

Plant Code	Estimated Cost to Segregate ($ March 1983)	Percent Increase Over Base Model Treatment System Cost			
		At Option 1	At Option 2	At Option 3	At Option 4
04688	$19,530	14.2	13.4	11.6	*
05117	11,300	22.0	19.6	18.5	14.7
05333	9,690	*	4.4	4.0	3.7
10865	82,280	10.8	10.5	9.9	*
22121	19,140	12.3	11.5	10.4	*
28222	9,690	*	4.4	4.0	3.7
Average	$25,270	14.8	10.6	9.7	7.4

*The option was not considered for that process segment.

**Costs include materials, installation labor and engineering, contingency, and contractor's fees.

Table VIII-9

SELECTED PROCESS SEGMENT COMBINATIONS FOR CENTRAL TREATMENT COST STUDY

Subcategory	Employee Size Group	Process Segment Combination	Percent Savings Over Segregated Treatment	
			Capital Costs	Annual Costs
1. Aluminum	<10	Casting Quench Mold Cooling Melting Furnance Scrubber	44.1	47.4
2. Copper	<10	Casting Quench Direct Chill Casting	19.9	15.2
3. Copper	100-249	Casting Quench Direct Chill Casting Mold Cooling Dust Collection Scrubber	11.0	32.4
4. Ferrous	10-49	Melting Furnance Scrubber Slag Quench Dust Collection Scrubber	26.4	38.9
5. Zinc	10-49	Casting Quench Die Casting Mold Cooling	43.0	46.0
		Avg.	28.9	36.0

Table VIII-10

INCREMENTAL POLLUTANT REMOVAL ESTIMATES
DUE TO APPLICATION OF MODEL TREATMENT TECHNOLOGY

Subcategory	Pollutant	Direct Discharge (lbs/yr) Current Discharge to Option 2	Direct Discharge (lbs/yr) Option 2 to Option 3	Indirect Discharge (lbs/yr) Current Discharge to Option 2	Indirect Discharge (lbs/yr) Option 2 to Option 3
Aluminum	Toxic Pollutants	12,600	46	114,000	36
	All Pollutants	716,000	2,780	5,450,000	2,110
Copper	Toxic Pollutants	154,000	1,400	18,100	59
	All Pollutants	660,000	20,700	113,000	3,330
Ferrous	Toxic Pollutants	1,610,000	6,080	2,670,000	5,010
	All Pollutants	144,000,000	61,300	122,000,000	46,800
Magnesium	Toxic Pollutants	0.331	0.002	9.69	0.007
	All Pollutants	20.4	0.085	308	0.559
Zinc	Toxic Pollutants	4,780	86	36,500	82
	All Pollutants	487,000	381	2,410,000	586

Table VIII-11

NET INCREASE IN ELECTRICAL ENERGY CONSUMPTION
DUE TO APPLICATION OF MODEL TREATMENT TECHNOLOGY

	Net Increase in Energy Consumption - Direct Dischargers million kilowatt-hours/yr			
Subcategory	Option 1	Option 2	Option 3	Option 4
Aluminum	0.40	0.49	0.63	0.72
Copper	6.6	6.7	8.0	8.4
Ferrous	11	12	14	15
Magnesium	0.0011	0.0011	0.0014	0.0020
Zinc	0.066	0.066	0.088	0.12

	Net Increase in Energy Consumption - Indirect Dischargers million kilowatt-hours/yr			
Subcategory	Option 1	Option 2	Option 3	Option 4
Aluminum	0.59	0.63	0.88	1.1
Copper	2.2	2.5	2.9	3.4
Ferrous	11	11	14	15
Magnesium	0.0016	0.0021	0.0028	0.0028
Zinc	0.16	0.18	0.21	0.27

Table VIII-12

INCREMENTAL INCREASE IN SOLID WASTE GENERATION
DUE TO APPLICATION OF MODEL TREATMENT TECHNOLOGY

	Incremental Increase in Solid Waste Generation - Direct Dischargers (tons/year)			
Subcategory	Current Discharge to Option 1	Option 1 to Option 2	Option 2 to Option 3	Option 3 to Option 4
Aluminum	1,400	22	9.5	22
Copper	1,400	140	68	40
Ferrous	570,000	770	240	210
Magnesium	0.092	0.0013	0.0005	0.0026
Zinc	1,200	1.7	1.5	6.2

	Incremental Increase in Solid Waste Generation - Indirect Dischargers (tons/year)			
Subcategory	Current Discharge to Option 1	Option 1 to Option 2	Option 2 to Option 3	Option 3 to Option 4
Aluminum	10,000	15	6.1	32
Copper	250	14	11	25
Ferrous	480,000	600	180	280
Magnesium	1.6	0.0079	0.0035	0.018
Zinc	5,900	5.2	2.7	13

Table VIII-13

CONSUMPTIVE WATER LOSS DUE TO APPLICATION
OF HIGH RATE RECYCLE
(million gallons/year)

Subcategory	Consumptive Water Loss[1]	Total Subcategory Applied Flow[2]	Water Loss as Percentage of Applied Flow
Aluminum	Negligible	2,400	0
Copper	83	12,000	0.70
Ferrous	90	69,000	0.13
Magnesium	Negligible	2.6	0
Zinc	1	770	0.13

[1]Estimated as 2 percent loss due to drift and evaporation in those segments that require cooling towers.

[2]Based on applied flow of direct and indirect discharging plants.

SECTION IX

BEST PRACTICABLE CONTROL TECHNOLOGY CURRENTLY AVAILABLE

INTRODUCTION

This section identifies model technologies, pollutants regulated, and mass-based limitations attainable through the application of the best practicable control technology currently available (BPT).

The factors considered in identifying BPT include the total cost of applying the technology in relation to the effluent reduction benefits from such application, the age of equipment and facilities involved, the manufacturing processes employed, nonwater quality environmental impacts (including energy requirements), and other factors the Administrator considers appropriate. In general, the BPT level represents the average of the best existing performances of plants of various ages, sizes, processes, or other common characteristics. Where existing performance is uniformly inadequate, BPT may be transferred from a different subcategory or category. Limitations based on transfer of technology are supported by a rationale concluding that the technology is transferable, and a reasonable prediction that it will be capable of achieving the prescribed effluent limits. See Tanner's Council of America v. Train, 540 F.2d 1188 (4th Cir. 1976). BPT includes internal controls, such as recycle, where such practices are common industry practice.

TECHNICAL APPROACH TO BPT

The objective of BPT effluent limitations is to reduce the total quantity of pollutants discharged into surface waters. Because plants could meet concentration-based limitations by dilution rather than treatment, mass limitations have been developed for the metal molding and casting industry. In order to establish nationally-applicable effluent limitations guidelines, the mass limitations were normalized by an appropriate production normalizing parameter (PNP). As discussed in Section IV, the PNP for the metal molding and casting category is generally tons of metal poured. For the case of scrubber discharges, the PNP is thousand standard cubic feet (1,000 SCF) of air flow through the scrubber. For the case of ferrous wet sand reclamation, the PNP is tons of sand reclaimed.

Pollutant discharge limitations for this category are written as mass loadings, allowable mass of pollutant discharge per mass of metal poured or sand reclaimed or volume of air flow through a wet scrubber. Mass loadings were calculated for each process segment within each subcategory. This calculation was made on a segment-by-segment basis because plants in this category may perform one or more operations in one or more subcategories.

The pollutant discharge limitation for each operation was calculated by multiplying the median production normalized wastewater discharge flow (gal/ton or gal/1,000 SCF) for that segment by the effluent concentration achievable by the BPT treatment technology (mg/l).

In order to determine which pollutants are found in wastewaters generated by the metal molding and casting industry, and thus require regulation, EPA conducted a field sampling program. This program and its results are described in Section V of this document.

Oil and grease, suspended solids, priority organic and metal pollutants, and total phenols are present in significant and treatable concentrations in wastewaters generated by the metal molding and casting operations. Although concentrations of the specific priority organic and metal pollutants present will vary from subcategory to subcategory, the same types of pollutants and similar wastewater matrices are present in each subcategory. Therefore, one treatment technology with preliminary treatment, where necessary, is an appropriate basis for BPT effluent limitations for all subcategories.

Although BPT limitations apply only to plants which discharge wastewater directly, direct and indirect dischargers have been considered as a single group in making technical assessments of data, reviewing manufacturing processes, and evaluating wastewater treatment technology options. An examination of plants and processes did not indicate any process differences based on the type of discharge, whether it be direct or indirect. Consequently, the calculation of the BPT regulatory flow included normalized flows from both direct and indirect dischargers.

BPT OPTION SELECTION

The Agency evaluated several end-of-pipe and in-process technologies to determine how suitable they are for controlling the pollutants detected in the sampling program (see Section VII). One of these treatment trains (Option 2) was selected as BPT: high rate recycle, with treatment of recycle system blowdown by oil skimming and lime precipitation and sedimentation (L&S). For the case of aluminum and zinc die casting, treatment is within the recycle loop, with recycle system blowdown discharged directly. Treatment for some process segments also includes emulsion breaking to remove emulsified lubricant oils and chemical addition (potassium permanganate) to oxidize phenolics and other organic compounds. This treatment will remove toxic metal and organic pollutants, phenols, oil and grease, and TSS. With the minor adjustments noted here and in Section VII for individual processes, this technology will be equally effective in treating wastewater from different generic processes (e.g., die casting, melting furnace scrubber, etc.) across subcategories.

EPA considered Option 1 (recycle, simple settling) for the BPT technology basis, but rejected it because these technologies are not effective in removing dissolved metals and emulsified oils. Dissolved metals and emulsified oils from die lubricants are a substantial portion of the raw waste load.

High-rate recycle, oil skimming, emulsion breaking, and lime and settle technologies are widely demonstrated in the metal molding and casting category (see Tables VII-1 and VII-4). The application and performance of this treatment train are discussed in detail in Section VII.

Chemical oxidation using potassium permanganate is not presently in use at full scale metal molding and casting treatment systems. However, potassium permanganate oxidation has been demonstrated in many other municipal and industrial wastewater treatment applications for removal of phenolic and other organic compounds. In addition, potassium permanganate oxidation has been shown to be effective in reducing total phenol and other organic concentrations in bench scale tests performed on metal molding and casting wastewater. The results of these bench tests are discussed in Section VII. The treatment effectiveness concentra tions used to determine BPT mass limitations for total phenol are based on mean performance at metal molding and casting plants with recycle, oil skimming and/or emulsion breaking, and lime and settle technology only. There are two reasons this technology option includes potassium permanganate addition for some process segments: first, to ensure that the chemical addition requirements at plants with high raw waste loads have not been underestimated; and, second, because some plants may need to employ potassium permanganate to ensure that the lime and settle treatment effectiveness concentrations will be met.

Treatment trains selected for each process segment are discussed later in this section.

EPA did not promulgate BPT limitations for the magnesium subcategory. As discussed later in this section, EPA concluded that BPT effluent limitations are not economically achievable for the magnesium subcategory.

REGULATED POLLUTANT PARAMETERS

The pollutants considered for regulation under BPT in each subcategory and the reasons for their consideration are described in Section VI. Pollutants were selected for regulation in the metal molding and casting subcategories because of their frequent presence at treatable concentrations in raw wastewaters. The basic list of pollutants selected for regulation in each subcategory has not changed since proposal. Those pollutants are copper, lead, zinc, oil and grease, phenol, total suspended solids, and pH. However, the list of pollutants selected for regulation in each process segment in some cases varies slightly from the lists published at proposal and in the March 20, 1984 notice of availability. Following publication of the March 20

notice, the Agency reevaluated the raw waste load data for each subcategory and process segment in response to public comment. Consideration of the reevaluated data led the Agency to select copper, lead, zinc, oil and grease, TSS and pH for regulation at BPT in each process segment. In addition, phenol is regulated in 10 process segments where the average concentration of phenol is at treatable levels. The reasons for selecting the above pollutants for regulation at BPT is discussed below. Additional details on pollutant selection by subcategory are found in Section VI of this document and in Section 22.58 of the record.

Total suspended solids, in addition to being present at high concentrations in raw wastewater from metal molding and casting operations, is an important control parameter for metals removal in chemical precipitation and settling treatment systems. Metals are precipitated as particulate metal and as insoluble metal hydroxides. Effective solids removal is required in order to ensure reduced levels of regulated toxic metals in the treatment system effluent. Therefore, total suspended solids are regulated as a conventional pollutant to be removed from the wastewater prior to discharge.

Oil and grease is regulated under BPT since a number of foundry operations generate free and emulsified oily wastewater streams which may be discharged. In addition, achieving a limitation on the discharge of oil and grease helps ensure that the discharge of toxic organic pollutants is controlled by incidentally removing toxic organic pollutants. This phenomenon occurs because of the preferential solubility of organics in oil, and is discussed in detail in Section VII.

Total phenol is regulated in those process segments where the average concentrations of total phenols are above treatable levels. Total phenol is commonly regulated in existing permits and gives an indication of levels of toxic phenolic and other organic compounds.

The importance of pH control is documented in Section VII and its importance in metals removal technology cannot be overemphasized. Even small excursions from the optimum pH level can result in less than optimum functioning of the treatment system and an inability to achieve specified results. The optimum operating level for removal of most metals is usually pH 8.8 to 9.3. However, some metals require higher or lower pH for optimal removal. To allow a reasonable operating margin and to preclude the need for final pH adjustment, the effluent pH is specified to be within the range of 7.0 to 10.

Copper, lead, and zinc are regulated because they are toxic metal pollutants frequently found in wastewaters from this industry. These metals are routinely controlled by existing discharge permits and limitations on these metals will ensure effective metals removal at the BPT level of treatment.

BPT FLOWS

EPA used DCP's, recycle analysis, and other data for each process segment within each subcategory to determine (1) the production normalized applied flow rates, (2) the specific recycle rates achievable, and (3) the specific production normalized discharge flows for each process segment.

First, the applied flow rates were analyzed to determine which flow was to be used as part of the basis for BPT mass limitations. The applied flow rates for each process segment are shown in Tables V-1 through V-29 (see Section V). For 25 of the 28 process segments, the median applied flow rate was selected as the BPT applied flow rate. The median is a commonly accepted measure of central tendency. Use of the median is very often preferred to other such measures for a number of reasons. The use of median water usage is a well established practice in determining effluent limitations guidelines and is consistent with the requirement that BPT limitations represent the average of the best performers.

The BPT applied flow is based on the median of all available data. Plants with existing applied flows above the median may have to implement flow reduction methods to achieve the BPT limitations. In most cases, this will involve improving housekeeping practices, better maintenance to limit water leakage, or reducing excess flow by turning down a flow valve. See Section VII for a more thorough discussion of flow reduction techniques. It is not believed that these modifications would generate any significant costs for the plants.

High-rate recycle is widely demonstrated throughout the metal molding and casting category. Therefore, the primary basis for recycle rate selection was the highest practicable recycle rates (i.e., lowest blowdown rates) demonstrated by plants in the industry. In response to comments on the proposed regulations, the Agency also developed a mathematical model of recycle system water chemistry. The purposes of this analysis were to (1) provide a greater technical understanding of the recycle systems, (2) confirm the feasibility of high rate and complete recycle systems or to identify water chemistry conditions which might prevent systems from operating at complete recycle, and (3) supplement industry data in identifying feasible ranges of recycle rates for those processes and water chemistry conditions for which complete recycle may not be feasible and for which industry data and recycle experience are limited. The recycle model also was used to determine the influence on achievable recycle rates of make-up water quality, treatment system sludge moisture content, and central treatment of combined process wastewaters. Details on the basis and results of the recycle model are presented in Section VII of this document.

In selecting recycle rates, the Agency considered recycle rates demonstrated by plants in the same generic process segment across subcategories. Generic processes are expected to exhibit the same range of recycle properties (e.g., operating range of pH,

scaling tendencies, need for chemical addition to maintain high-rate recycle) and achievable recycle rates. Results of the recycle model analysis confirmed these expectations. For these reasons, the recycle rates selected for generic processes are similar. Also, where necessary, data on recycle rates have been consolidated by generic process across subcategories to ensure that selected recycle rates are not based on limited or uncharac teristic practices at a few plants.

In a few cases, the results of the recycle model analysis indicated marginal differences from demonstrated recycle practice. Specifically, in the ferrous subcategory, the melting furnace scrubber, dust collection scrubber, and slag quench process were found to be marginally sensitive to poor make-up water quality. Accordingly, recycle rates have been reduced below demonstrated rates to account for this sensitivity in these three processes. Also, the Agency found there was no recycle experience in the investment casting process. In this case, the achievable recycle rate identified by the recycle model was selected as the recycle rate for the investment casting process in the aluminum, copper, and ferrous subcategories.

The recycle rates achievable for each process segment are discussed by process later in this section.

Finally, the production normalized discharge flow was calculated for each process segment using the following equation:

Discharge Flow = Applied Flow (1 - Recycle Rate/100).

Table IX-1 summarizes the BPT applied flow rates, recycle rates, and discharge rates for each process segment.

BPT EFFLUENT LIMITATIONS

The BPT mass limitations (mass of pollutant allowed to be discharged per mass of metal poured, quantity of sand reclaimed, or volume of wet scrubber air flow) are presented in Table IX-2. These limitations were calculated for each regulated pollutant in each process segment as follows: the BPT normalized flow for each process segment (see Table IX-1) was multiplied by the one-day maximum and by the maximum monthly average treatment effectiveness concentrations (see Table VII-12) corresponding to the BPT technology option selected for each subcategory. As explained in Section VII, the maximum monthly average treatment effectiveness concentration is based on the average of 10 samples over the period of a month.

The BPT limitations presented at proposal assumed that discharges from metal molding and casting plants would always be on a continuous basis. Information submitted in comments and confirmed by EPA indicate that treatment is commonly done on a batch basis with discharge on an intermittent basis.

To allow this practice to continue where plants find batch

treatment to be an effective control technique, the final regulations contain provisions that would allow metal molding and casting plants to discharge on an intermittent basis provided that they comply with annual average BPT limitations that are equivalent to the BPT effluent limitations applicable to continuous discharging plants. Plants are eligible for the annual average limitations and standards where wastewaters are stored for periods in excess of 24 hours to be treated on a batch basis. NPDES permits established for these "noncontinuous" discharging plants must contain concentration-based maximum day and maximum for monthly average limitations established for continuous discharging plants. BPT effluent limitations applicable to intermittent discharging plants are shown in Table IX-3.

BPT DEVELOPMENT BY SUBCATEGORY AND PROCESS SEGMENT

The remainder of this section describes the development of BPT mass limitations for each subcategory. The development of the BPT regulatory flow for each process segment in each subcategory is presented in detail. The pollutants regulated and the cost and effluent reduction benefits of their regulation at BPT also are listed. The methodology for calculating costs and benefits is discussed in Section VIII.

Aluminum Subcategory

Option 2 (recycle, lime and settle) was selected as the technology basis for BPT limitations in this subcategory. The pollutants selected for limitations are pH, TSS, oil and grease, copper, lead, and zinc. In addition, total phenol has been detected in treatable concentrations in the aluminum die casting, dust collection, and melting furnace scrubber process segments and has been selected for regulation in those segments. The applied flow rate, recycle rate, and model control technology for each of the eight aluminum process segments are discussed below.

The total required investment cost for BPT model treatment (beyond equipment in place) for aluminum casting plants is $3.1 million and the total annualized cost is $1.4 million (1985 dollars).

Total removal of toxic pollutants from current direct discharges from aluminum casting plants would be 5,723 kg/yr (12,620 lbs/yr). In addition, compliance with BPT will result in the removal of 0.325 million kg/yr (0.716 million lbs/yr) of total (conventional, nonconventional, and toxic) pollutants.

Casting Cleaning

The model control technology is process water settling in a settling tank followed by recycle. Acid is added to the recycle system to control scaling. The blowdown from the recycle system is treated in a lime and settle system which includes oil skimming, lime and polymer addition, and settling.

The flow that forms the basis of the BPT effluent limitations (BPT flow) promulgated for aluminum casting cleaning is 24 gallons/ton of metal poured. The median applied flow rate of 480 gallons/ton was obtained from Table V-1. That shows three plants reporting sufficient information to calculate an applied flow rate. Plant 07280 has the median flow rate.

Two of the three plants in the metal molding and casting data base that recycle casting cleaning process water recycle 95 percent or more of that water. The one plant in the metal molding and casting data base that recycles aluminum casting cleaning process water recycles 99 percent of that water. However, casting cleaning water generally carries a high pollutant load and 99 percent recycle may not be attainable in all cases. Based on demonstrated recycle practice for this process across subcategories, the BPT recycle rate for the aluminum casting cleaning segment is 95 percent.

Casting Quench

The model control technology is process water settling in a settling tank followed by recycle. Acid is added to the recycle system to control scale formation. The blowdown from the recycle system is treated in a lime and settle system which includes oil skimming, lime and polymer addition, and settling.

The flow that forms the basis of the BPT effluent limitations (BPT flow) promulgated for aluminum casting quench is 2.9 gallons per ton of metal poured. The median applied flow rate of 145 gallons per ton was obtained from Table V-2. That shows 23 plants reporting sufficient information to calculate an applied flow rate. Plant 26767 has the median flow rate.

Eight of the 14 plants in the aluminum casting quench segment that recycle aluminum casting quench process water recycle 98 percent or more of that water. Based on the water chemistry model, EPA estimates that 100 percent recycle of aluminum casting quench water is achievable if make-up water of mean quality is available; 98 percent recycle is achievable if make-up water of poor quality is available. Based on demonstrated recycle practice and confirmed as achievable by the water chemistry model, the BPT recycle rate for the aluminum casting quench segment is 98 percent.

Die Casting

The model control technology is treatment of the entire process wastewater flow in a lime and settle system which includes emulsion breaking, oil skimming, chemical oxidation by potassium permanganate, lime and polymer addition, settling, followed by recycle. Acid is added to the recycle system to control scale formation. Including the full measure of Option 2 treatment inside the recycle loop ensures that water quality after treatment is suitable for recycle.

The flow that forms the basis of the BPT effluent limitations (BPT flow) promulgated for aluminum die casting is 2.07 gallons per ton of metal poured. The median applied flow rate of 41.4 gallons per ton was obtained from Tables V-3 and V-27. They show 27 plants reporting sufficient information to calculate a die casting applied flow rate. Plant 18139 has the median flow rate. Flow data for aluminum and zinc die casting operations are combined because these operations are very similar, and are often performed at the same plant using the same or similar equipment.

Seven of the 11 plants in the aluminum and zinc die casting segment that recycle die casting process water recycle 95 percent or more of that water. Based on the water chemistry model, EPA estimates that 100 percent recycle of aluminum die casting process water is achievable using make-up water of either mean or poor quality. Based on demonstrated recycle practice and confirmed as achievable by the water chemistry model, the BPT recycle rate for the aluminum die casting segment is 95 percent.

Dust Collection Scrubber

The model control technology is process water settling in a settling tank followed by recycle. Acid is added to the recycle system to control scale formation. The blowdown from the recycle skimming, chemical oxidation by potassium permanganate, lime and polymer addition, and settling. Following the February 15, 1985 notice of availability, EPA included chemical oxidation using potassium permanganate in the model BPT basis for the aluminum dust collection scrubber process segments. This was done to ensure that the phenol limitations would be achievable even where high levels of phenols would be present in the treatment system influent.

The flow that forms the basis of the BPT effluent limitations (BPT flow) promulgated for aluminum dust collection scrubber is 0.036 gallons per thousand standard cubic feet of air. The median applied flow rate of 1.78 gallons per 1,000 SCF was obtained from Table V-4. That shows nine plants reporting sufficient information to calculate an applied flow rate. Plant 20063 has the median flow rate.

Seven of the 11 plants in the metal molding and casting data base in nonferrous subcategories that recycle dust collection scrubber water recycle 98 percent or more of that water. Based on the water chemistry model, EPA estimates that 100 percent recycle of aluminum dust collection scrubber water is achievable using make-up water of either mean or poor quality. Based on demonstrated recycle practice and confirmed as achievable by the water chemistry model, the BPT recycle rate for the aluminum dust collection scrubber segment is 98 percent.

Grinding Scrubber

The model control technology is process water settling in a settling tank followed by complete recycle. Acid is added to the recycle system to control scale formation.

There is no BPT discharge flow allowance for aluminum grinding scrubber wastewater. The median applied flow rate of 0.063 gallons/1,000 SCF was obtained from Table V-5. That shows three plants reporting sufficient information to calculate an applied flow rate. Plant 74992 has the median applied flow rate.

Two of the three plants in nonferrous subcategories that recycle grinding scrubber water recycle 100 percent of that water. In addition, five of the 12 plants in the metal molding and casting data base that recycle ferrous grinding scrubber water recycle 100 percent of that water. Based on demonstrated recycle practice, the BPT recycle rate for the aluminum grinding scrubber segment is 100 percent.

Investment Casting

The model control technology is process water settling in a drag tank followed by recycle. Caustic is added to the recycle system to control corrosion. The blowdown from the recycle system is treated in a lime and settle system which includes oil skimming, lime and polymer addition, and settling.

The flow that forms the basis of the BPT effluent limitations (BPT flow) promulgated for aluminum investment casting is 2,640 gallons per ton of metal poured. The median applied flow rate of 17,600 gallons per ton was obtained from Table V-6. That shows four plants reporting sufficient information to calculate an applied flow rate. Plants 05206 and 20063 have the median flow rates. The median is based on the average of these two flows. The reported flows for aluminum, copper, and ferrous investment casting are combined because two of the four plants with investment casting (plants 04704 and 01994) cast all three metals.

There are no plants that recycle wastewater. However, based on the water chemistry model, EPA estimates that 85 percent recycle of aluminum investment casting process water is achievable using make-up water of either mean or poor quality. Therefore, the BPT recycle rate for the aluminum investment casting segment is 85 percent.

Melting Furnace Scrubber

The model control technology is process water settling in a settling tank followed by recycle. Acid is added to the recycle system to control scale formation. The blowdown from the recycle system is treated in a lime and settle system which includes oil skimming, chemical oxidation by potassium permanganate, lime and polymer addition, and settling. Following the February 15, 1985

notice of data availability, EPA included chemical oxidation using potassium permanganate for the aluminum melting furnace scrubber process segment. This was done to ensure that the phenol limitations would be achievable even where high levels of phenols would be present in the treatment system influent.

The flow that forms the basis of the BPT effluent limitations (BPT flow) promulgated for aluminum melting furnace scrubber is 0.468 gallons per thousand standard cubic feet. The median applied flow rate of 11.7 gallons per 1,000 SCF was obtained from Table V-7. That shows four plants reporting sufficient information to calculate an applied flow rate. Plants 17089 and 22121 have the median flow rate.

Eight of the 13 plants in the metal molding and casting data base in nonferrous subcategories that recycle melting furnace scrubber water recycle 95 percent or more of that water. Five of the 13 recycle 97 percent or more of the water. In addition, 51 of 85 plants in the metal molding and casting data base that recycle ferrous melting furnace scrubber water recycle 96 percent or more of that water. Based on the water chemistry model, EPA estimates that 100 percent recycle of aluminum melting furnace scrubber water is achievable if make-up water of mean quality is available; 99.5 percent recycle is achievable if make-up water of poor quality is available. Based on demonstrated recycle practice and confirmed as achievable by the water chemistry model, the BPT recycle rate for the aluminum melting furnace scrubber segment is 96 percent.

Mold Cooling

The model control technology is process water settling in a settling tank followed by recycle. Acid is added to the recycle system to control scale formation. The blowdown from the recycle system is treated in a lime and settle system which includes oil skimming, lime and polymer addition, and settling.

The flow that forms the basis of the BPT effluent limitations (BPT flow) promulgated for aluminum mold cooling is 92.5 gallons per ton of metal poured. The median applied flow rate of 1,850 gallons per ton was obtained from Table V-8. That shows 15 plants reporting sufficient information to calculate an applied flow rate. Plant 87599 has the median flow rate.

Fifteen of the 25 plants in the metal molding and casting data base that recycle mold cooling water recycle 95 percent or more of that water. Based on demonstrated recycle practice, the BPT recycle rate for the aluminum mold cooling segment is 95 percent.

Copper Subcategory

Option 2 (recycle, lime and settle) was selected as the technology basis for BPT limitations in this subcategory. The pollutants selected for limitations are pH, TSS, oil and grease, copper, lead, and zinc. In addition, total phenol has been

detected in treatable concentrations in the copper dust collection scrubber and melting furnace scrubber segments, and has been selected for regulation in those segments. The applied flow rate, recycle rate, and model control technology for each of the seven copper process segments are discussed below.

The total required investment cost for BPT model treatment (beyond equipment in place) for copper casting plants is $8.4 million and the total annualized cost is $3.7 million (1985 dollars).

Total removal of toxic pollutants from current direct discharges from copper casting plants would be 70,050 kg/yr (154,500 lbs/yr). In addition, compliance with BPT will result in the removal of 0.300 million kg/yr (0.660 million lbs/yr) of total (conventional, nonconventional, and toxic) pollutants.

Casting Quench

The model control technology is process water settling in a settling tank followed by recycle. Acid is added to the recycle system to control scale formation. The recycle loop includes a cooling tower for larger size plants to maintain a proper process water temperature. The blowdown from the recycle system is treated in a lime and settle system which includes oil skimming, lime and polymer addition, and settling.

The flow that forms the basis of the BPT effluent limitations (BPT flow) promulgated for copper casting quench is 9.56 gallons per ton of metal poured. The median applied flow rate of 478 gallons per ton was obtained from Table V-9. That shows 18 plants reporting sufficient information to calculate an applied flow rate. The median flow is based on the average flow from plants 25007 and 25009.

Four of the seven plants in the copper casting quench segment that recycle copper casting quench water recycle 98 percent or more of that water. Based on demonstrated recycle practice, the BPT recycle rate for the copper casting quench segment is 98 percent.

Direct Chill Casting

The model control technology is process water settling in a settling (drag) tank followed by recycle. Acid is added to the recycle system to control scale formation. The recycle loop includes a cooling tower to maintain proper process water temperature. The blowdown from the recycle system is treated in a lime and settle system which includes oil skimming, lime and polymer addition, and settling.

The flow that forms the basis of the BPT effluent limitations (BPT flow) promulgated for copper direct chill casting is 289 gallons per ton of metal poured. The median applied flow rate of 5,780 gallons per ton was obtained from Table V-10. That shows

five plants reporting sufficient information to calculate an applied flow rate. Plant 80029 has the median flow rate.

Five of the seven plants in the copper direct chill casting segment that recycle copper casting quench water recycle 95 percent or more of that water. Based on the water chemistry model, EPA estimates that 100 percent recycle of copper direct chill casting water is achievable using make-up water of either mean or poor quality. Based on demonstrated recycle practice and confirmed as achievable by the water chemistry model, the BPT recycle rate for the copper direct chill casting segment is 95 percent.

Dust Collection Scrubber

The model control technology is process water settling in a drag tank followed by recycle. Acid is added to the recycle system to control scale formation. The blowdown from the recycle system is treated in a lime and settle system which includes oil skimming, chemical oxidation by potassium permanganate, lime and polymer addition, and settling. Following the February 15, 1985 notice of data availability, EPA included chemical oxidation using potassium permanganate for the copper dust collection scrubber process segment. This was done to ensure that the phenol limitations would be achievable even where high levels of phenols would be present in the treatment system influent.

The flow that forms the basis of the BPT effluent limitations (BPT flow) promulgated for the copper dust collection scrubber process segment is 0.086 gallons per thousand standard cubic feet. The median applied flow rate of 4.29 gallons per 1,000 SCF was obtained from Table V-11. That shows nine plants reporting sufficient information to calculate an applied flow rate. Plant 38840 has the median flow rate.

Seven of the 11 plants in the metal molding and casting data base in nonferrous subcategories that recycle dust collection scrubber water recycle 98 percent or more of that water. Based on the water chemistry model, EPA estimates that 100 percent recycle of copper dust collection scrubber water is achievable if make-up water of either mean or poor quality is available. Based on demonstrated practice and confirmed as achievable by the water chemistry model, the BPT recycle rate for the copper dust collection scrubber segment is 98 percent.

Grinding Scrubber

The model control technology is process water settling in a settling tank followed by complete recycle. Acid is added to the recycle system to control scale formation.

There is no BPT discharge flow allowance for copper grinding scrubber wastewater. The median applied flow rate of 0.111 gallons/1,000 SCF was obtained from Table V-12. That shows one plant reporting sufficient information to calculate an applied

flow rate. Plant 04851 has the median applied flow rate.

Two of the three plants in the metal molding and casting data base in nonferrous subcategories that recycle grinding scrubber water recycle 100 percent of that water. The one plant in the data base that recycles copper grinding scrubber water recycles 100 percent of that water. Based on demonstrated recycle practice, the BPT recycle rate for the copper grinding scrubber segment is 100 percent.

Investment Casting

The model control technology is process water settling in a settling tank followed by recycle. Caustic is added to the recycle system to control corrosion. The blowdown from the recycle system is treated in a lime and settle system which includes oil skimming, lime and polymer addition, and settling.

The flow that forms the basis of the BPT effluent limitations (BPT flow) promulgated for copper investment casting is 2,640 gallons per ton of metal poured. The median applied flow rate of 17,600 gallons per ton was obtained from Table V-6. That shows four plants reporting sufficient information to calculate an applied flow rate. Plants 05206 and 20063 have the median flow rates. The median is based on the average of these two flows. The reported flows for aluminum, copper, and ferrous investment casting are combined because two of the four plants with investment casting (plants 04704 and 01994) cast all three metals.

Using the water chemistry model, it was shown that 85 percent recycle of aluminum investment casting process water is achievable. Copper investment casting process water should exhibit the same recycle potential as aluminum investment casting process water because the processes are essentially the same and the wastewater characteristics are similar. Therefore, the BPT recycle rate for the copper investment casting segment is 85 percent.

Melting Furnace Scrubber

The model control technology is process water settling in a settling tank followed by recycle. Acid is added to the recycle system to control scale formation. The blowdown from the recycle system is treated in a lime and settle system which includes chemical oxidation by potassium permanganate, oil skimming, lime and polymer addition, and settling. Following the February 15, 1985 notice of data availability, EPA included chemical oxidation using potassium permanganate in the model BPT basis for the copper melting furnace scrubber process segment. This was done to ensure that the phenol limitations would be achievable even where high levels of phenols would be present in the treatment system influent.

The flow that forms the basis of the BPT effluent limitations (BPT flow) promulgated for copper melting furnace scrubber is 0.282 gallons per thousand standard cubic feet. The median applied flow rate of 7.04 gallons per 1,000 SCF was obtained from Table V-13. That shows three plants reporting sufficient information to calculate an applied flow rate. Plant 05934 has the median flow rate.

Five of the 13 plants in the metal molding and casting data base in nonferrous subcategories that recycle melting furnace scrubber water recycle 96 percent or more of that water. In addition, 51 of 85 plants in the metal molding and casting data base that recycle ferrous melting furnace scrubber water recycle 96 percent or more of that water. Based on demonstrated recycle practice, the BPT recycle rate for the copper melting furnace scrubber segment is 96 percent.

Mold Cooling

The model control technology is process water settling in a settling tank followed by recycle. Acid is added to the recycle system to control scale formation. The recycle loop includes a cooling tower to maintain proper process water temperatures. The blowdown from the recycle system is treated in a lime and settle system which includes oil skimming, lime and polymer addition, and settling.

The flow that forms the basis of the BPT effluent limitations (BPT flow) promulgated for copper mold cooling is 122 gallons per ton of metal poured. The median applied flow rate of 2,450 gallons per ton was obtained from Table V-14. That shows eight plants reporting sufficient information to calculate an applied flow rate. Plants 20017 and 08951 have the median flow rates. The median flow is based on the average of these two plants' flows.

Fifteen of the 25 plants in the metal molding and casting data base that recycle mold cooling water recycle 95 percent or more of that water. Based on the water chemistry model, EPA estimates that 100 percent recycle of copper mold cooling water is achievable if make-up water of mean quality is available; 99.5 percent recycle is achievable if make-up water of poor quality is available. Based on demonstrated recycle practice and confirmed as achievable using the water chemistry model, the BPT recycle rate for the copper mold cooling segment is 95 percent.

Ferrous Subcategory

Option 2 (recycle, lime and settle) was selected as the technology basis for BPT limitations in this subcategory. The pollutants selected for limitations are pH, TSS, oil and grease, copper, lead, and zinc. In addition, total phenols have been detected in treatable concentrations in the ferrous dust collection scrubber, melting furnace scrubber, and wet sand reclamation segments, and has been selected for regulation in

those segments. The applied flow rate, recycle rate, and model control technology for each of the nine ferrous process segments are discussed below.

The total required investment cost for BPT model treatment (beyond equipment in place) for ferrous casting plants is $27.9 million and the total annualized cost is $12.2 million (1985 dollars).

Total removal of toxic pollutants from current direct discharges from ferrous casting plants would be 731,100 kg/yr (1,612,000 lbs/yr). In addition, compliance with BPT will result in the removal of 65.3 million kg/yr (144 million lbs/yr) of total (conventional, nonconventional, and toxic) pollutants.

Casting Cleaning

The model control technology is process water settling in a settling tank followed by recycle. The blowdown from the recycle system is treated in a lime and settle system which includes oil skimming, lime and polymer addition, and settling.

The flow that forms the basis of the BPT effluent limitations (BPT flow) promulgated for ferrous casting cleaning is 10.7 gallons per ton of metal poured. The median applied flow rate of 213 gallons per ton was obtained from Table V-15. That shows 15 plants reporting sufficient information to calculate an applied flow rate. Plant 20699 has the median flow rate.

Two of the three plants in the ferrous and nonferrous subcategories in the metal molding and casting data base that recycle casting cleaning process water recycle 95 percent or more of that water. Based on demonstrated recycle practice, the BPT recycle rate for the ferrous casting cleaning segment is 95 percent.

Casting Quench

The model control technology is process water settling in a settling tank followed by recycle. Acid is added to the recycle system to control scale formation. The recycle loop includes a cooling tower for larger size plants to maintain a proper process water temperature. The blowdown from the recycle system is treated in a lime and settle system which includes oil skimming, lime and polymer addition, and settling.

The flow that forms the basis of the BPT effluent limitations (BPT flow) promulgated for ferrous casting quench is 11.4 gallons per ton of metal poured. The median applied flow rate of 571 gallons per ton was obtained from Table V-16. That shows 48 plants reporting sufficient information to calculate an applied flow rate. Plants 10388 and 07472 have the median flow rates. The median is based on the average of the flows of these two plants.

Seventeen of the 24 plants that recycle ferrous casting quench water recycle 98 percent or more of that water. Based on the water chemistry model, EPA estimates that 100 percent recycle of combined ferrous casting quench and ferrous mold cooling water is achievable if make-up water of mean quality is available; 99.5 percent recycle is achievable if make-up water of poor quality is available. Based on demonstrated recycle practice, and confirmed as achievable using the water chemistry model, the BPT recycle rate for the ferrous casting quench segment is 98 percent.

Dust Collection Scrubber

The model control technology is process water settling in a drag tank followed by recycle. Acid is added to the recycle system to control scale formation. The blowdown from the recycle system is treated in a lime and settle system which includes oil skimming, chemical oxidation by potassium permanganate, lime and polymer addition, and settling.

The flow that forms the basis of the BPT effluent limitations (BPT flow) promulgated for ferrous dust collection scrubber is 0.09 gallons per thousand standard cubic feet. The median applied flow rate of 3.0 gallons per 1,000 SCF was obtained from Table V-17. That shows 153 plants with a total of 1,031 scrubbers reporting sufficient information to calculate an applied flow rate. Plants 01644, 01834, 04073, 04621, 09148, 11964, 12203, 14069, 14809, 17348, 19347, 27743, and 38842 have the median flow rate.

Seventy-seven of the 126 plants in the metal molding and casting data base that recycle ferrous dust collection scrubber water recycle 98 percent or more of that water. Based on the water chemistry model, EPA estimates that 97.5 percent recycle of ferrous dust collection scrubber water is achievable if make-up water of mean quality is available; 97 percent recycle is achievable if make-up water of poor quality is available. In this case, the model predicted recycle rate based on mean make-up water quality is lower than the rate demonstrated as achievable. The Agency believes that this shows that the recycle model analysis predicts lower recycle rates than actually are achievable for this segment. In addition, in the ferrous dust collection scrubber segment, the recycle model has shown that if poor quality make-up waters are used, marginally lower attainable recycle rates are anticipated than if mean quality make-up waters are used. For these reasons, EPA did not base the selection of the BPT recycle rate on the results of the model for worst make-up water quality. Rather, the Agency calculated the difference between recycle rates based on average make-up water quality and worst make-up water quality (97.5 percent less 97.0 percent, or 0.5 percent rounded to 1.0 percent), and reduced the demonstrated recycle rate of 98 percent by that amount. Thus, the recycle rate selected was 97 percent. Additionally, it has been found through the use of the recycle model that the marginal increase in blowdown rate, necessary to account for make-up water quality, is adequate to allow facilities with central treatment of

combined wastewaters (including ferrous dust collection scrubber water) to achieve separate stream recycle rates on a flow-weighted basis.

Grinding Scrubber

The model control technology is process water settling in a settling tank, followed by complete recycle. Acid is added to the recycle system to control scale formation.

There is no BPT discharge flow allowance for ferrous grinding scrubber. The median applied flow rate of 3.17 gallons/1,000 SCF was obtained from Table V-18. That shows 27 plants reporting sufficient information to calculate an applied flow rate. The median flow rate is based on the average of the flows reported by plants 16612 and 04621.

Five of the 11 plants that recycle ferrous grinding scrubber water recycle 100 percent of that water. Based on demonstrated recycle practice, the BPT recycle rate for the ferrous grinding scrubber segment is 100 percent.

Investment Casting

The model control technology is process water settling in a settling tank followed by recycle. Caustic is added to the recycle system to control corrosion. The blowdown from the recycle system is treated in a lime and settle system which includes oil skimming, lime and polymer addition, and settling.

The flow that forms the basis of the BPT effluent limitations (BPT flow) promulgated for ferrous investment casting is 2,640 gallons per ton of metal poured. The median applied flow rate of 17,600 gallons per ton was obtained from Table V-6. That shows four plants reporting sufficient information to calculate an applied flow rate. Plants 05206 and 20063 have the median flow rates. The median is based on the average of these two flows. The reported flows for aluminum, copper, and ferrous investment casting are combined because two of the four plants with investment casting (plants 04704 and 01994) cast all three metals.

Based on the water chemistry model, EPA estimates that 85 percent recycle of aluminum investment casting process water is achievable. Ferrous investment casting process water should exhibit the same recycle potential as aluminum investment casting process water because the processes are essentially the same and the wastewater characteristics are similar. Therefore, the BPT recycle rate for the ferrous investment casting segment is 85 percent.

Melting Furnace Scrubber

The model control technology is process water settling in a drag tank followed by recycle. Acid is added to the recycle loop to

control scale formation. The blowdown from the recycle system is treated in a lime and settle system which includes oil skimming, chemical oxidation by potassium permanganate, lime and polymer addition, and settling. Following the February 15, 1985 notice of data availability, EPA included chemical oxidation using potassium permanganate for the ferrous melting furnace scrubber process segment. This was done to ensure that the phenol limitations would be achievable even where high levels of phenols would be present in the treatment system influent.

The flow that forms the basis of the BPT effluent limitations (BPT flow) promulgated for ferrous melting furnace scrubber is 0.42 gallons per thousand standard cubic feet. The median applied flow rate of 10.5 gallons per 1,000 SCF was obtained from Table V-19. That shows 86 scrubbers for which sufficient information to calculate an applied flow rate is available. Plants 14254, 16612, and 08496 have the median flow rates. The median is based on the average of the flows at plants 14254 and either plant 16612 or 08496, since they have identical flows.

Forty-seven of the 85 plants in the metal molding and casting data base that recycle ferrous melting furnace scrubber water recycle 98 percent or more of that water. In the March 20, 1984 notice of availability, EPA indicated that the probable regulatory recycle rate being considered for the ferrous melting furnace scrubber segment was 98 percent recycle. Based on the water chemistry model, EPA estimates that 95 percent recycle of ferrous melting furnace scrubber water is achievable if make-up water of mean quality is available; 93 percent recycle is achievable if make-up water of poor quality is available. In this case, the model predicted recycle rate based on mean make-up water quality is lower than the rate demonstrated as achievable. The Agency believes that this shows that the recycle model analysis predicts lower recycle rates than actually are achievable for this segment. In addition, in this segment the recycle model has shown that if poor quality make-up waters are used, marginally lower attainable recycle rates are anticipated than if mean quality make-up waters are used. For these reasons, EPA did not select recycle rates that are exactly as identified by the model for worst make-up water quality. Rather, the Agency has determined that the BPT recycle rate should be 96 percent. This rate approximates the difference between recycle rates based on average make-up water quality and worst make-up water quality (2 percent), applied to reduce the demonstrated recycle rate (98 percent). Additionally, it has been found through use of the recycle model that the marginal increase in blowdown rate, necessary to account for make-up water quality, is adequate to allow facilities with central treatment of combined wastewaters (including ferrous melting furnace scrubber water) to achieve separate stream recycle rates on a flow-weighted basis.

Mold Cooling

The model control technology is process water settling in a drag tank followed by recycle. Acid is added to the recycle system to

control scale formation. In addition, the recycle loop includes a cooling tower to maintain proper process water temperatures. The blowdown from the recycle system is treated in a lime and settle system which includes oil skimming, lime and polymer addition, and settling.

The flow that forms the basis of the BPT effluent limitations (BPT flow) promulgated for ferrous mold cooling is 35.4 gallons per ton of metal poured. The median applied flow rate of 707 gallons per ton was obtained from Table V-20. That shows 10 plants reporting sufficient information to calculate an applied flow rate. Plants 17746 and 14069 have the median flow rates. The median is based on the average flow of those two plants. Fifteen of the 25 plants in the ferrous and nonferrous subcategories in the metal molding and casting data base that recycle mold cooling water recycle 95 percent or more of that water. Based on the water chemistry model, EPA estimates that 100 percent recycle of combined ferrous mold cooling and ferrous casting quench water is achievable if make-up water of mean quality is available; 99.5 percent recycle is achievable if make-up water of poor quality is available. Based on demonstrated recycle practice, and confirmed as achievable using the water chemistry model, the BPT recycle rate for the ferrous mold cooling segment is 95 percent.

Slag Quench

The model control technology is process water setting in a settling tank followed by recycle. Acid is added to the recycle system to control scale formation. The blowdown from the recycle system is treated in a lime and settle system which includes oil skimming, lime and polymer addition, and settling.

The flow that forms the basis of the BPT effluent limitations (BPT flow) promulgated for ferrous slag quench is 43.6 gallons per ton of metal poured. The median applied flow rate of 727 gallons per ton was obtained from Table V-21. That shows 79 plants reporting sufficient information to calculate an applied flow rate. Plant 16666 has the median flow rate.

Twenty-eight of 52 plants in the metal molding and casting data base that recycle ferrous slag quench water recycle 95 percent or more of that water. In the March 20, 1984 notice of availability, EPA indicated that the probable regulatory recycle rate being considered for the ferrous slag quench segment was 98 percent recycle. Based on the water chemistry model, EPA estimates that 93 percent recycle of ferrous slag quench process water is achievable if make-up water of mean quality is available; 92 percent recycle is achievable if make-up water of poor quality is available. In this case, the model predicted recycle rate based on mean make-up water quality is lower than the rate demonstrated as achievable. The Agency believes that this shows that the recycle model analysis predicts lower recycle rates than actually are achievable for this segment. In addition, in this segment the recycle model has shown that if

poor quality make-up waters are used, marginally lower attainable recycle rates are anticipated than if mean quality make-up waters are used. For these reasons, EPA did not select recycle rates that are exactly as identified by the model for worst make-up water quality. Rather, the Agency has determined that the BPT recycle rate should be 94 percent. This rate approximates the difference between recycle rates based on average make-up water quality and worst make-up water quality (1 percent), applied to reduce the demonstrated recycle rate (95 percent). Additionally, it has been found through use of the recycle model that the marginal increase in blowdown rate, necessary to account for make-up water quality, is adequate to allow facilities with central treatment of combined wastewaters (including ferrous slag quench water) to achieve separate stream recycle rates on a flow-weighted basis. Alternatively, plants with this process wastewater may elect to segregate this stream so that the silica scaling tendencies of the slag quench water do not interfere with recycle of other process wastewater streams.

Wet Sand Reclamation

The model control technology is process water settling in a drag tank followed by recycle. Acid is added to the recycle system to control scale formation. The blowdown from the recycle system is treated in a lime and settle system which includes oil skimming, chemical oxidation by potassium permanganate, lime and polymer addition, and settling.

The flow that forms the basis of the BPT effluent limitations (BPT flow) promulgated for ferrous wet sand reclamation is 179 gallons per ton of sand reclaimed. The median applied flow rate of 895 gallons per ton was obtained from Table V-22. That table shows 14 plants reporting sufficient information to calculate an applied flow rate. Plants 80770 and 51473 have the median flow rates. The median is based on the average flow from those two plants.

Three of the six plants that recycle ferrous wet sand reclamation water recycle 80 percent or more of that water. Based on the water chemistry model, EPA estimates that the achievable recycle rate of ferrous wet sand reclamation water varies from 97 to 97.5 percent, depending on make-up water quality. Based on demonstrated recycle practice and confirmed as achievable by the water chemistry model, the BPT recycle rate for the ferrous wet sand reclamation segment is 80 percent.

Magnesium Subcategory

EPA has not promulgated categorical BPT effluent limitations for the magnesium subcategory. EPA has determined that the BPT options considered for the magnesium subcategory are not economically achievable for the subcategory as a whole. One of two plants were projected to close if even the most basic of treatment were used as the basis of BPT.

Zinc Subcategory

Option 2 (recycle, lime and settle) was selected as the technology basis for BPT limitations in this subcategory. The pollutants selected for limitations are pH, TSS, oil and grease, copper, lead, and zinc. In addition, total phenol has been detected in treatable concentrations in the zinc die casting and melting furnace scrubber segments, and has been selected for regulation in those segments. The applied flow rate, recycle rate, and model control technology for each of the four zinc process segments are discussed below.

The total required investment cost for BPT model treatment (beyond equipment in place) for zinc casting plants is $0.20 million and the total annualized cost is $0.13 million (1985 dollars).

Total removal of toxic pollutants from current direct discharges from ferrous casting plants would be 2,166 kg/yr (4,776 lbs/yr). In addition, compliance with BPT will result in the removal of 0.221 million kg/yr (0.487 million lbs/yr) of total (conventional, nonconventional, and toxic) pollutants.

Casting Quench

The model control technology is process water settling in a settling tank followed by recycle. Acid is added to the recycle system to control scale formation. The blowdown from the recycle system is treated in a lime and settle system which includes oil skimming, lime and polymer addition, and settling.

The flow that forms the basis of the BPT effluent limitations (BPT flow) promulgated for zinc casting quench is 10.7 gallons per ton of metal poured. The median applied flow rate of 533 gallons per ton was obtained from Table V-26. That shows 21 plants reporting sufficient information to calculate an applied flow rate. Plant 05091 has the median flow rate.

Fourteen of the 30 plants in the metal molding and casting data base in nonferrous subcategories that recycle casting quench process water recycle 98 percent or more of that water. Additionally, 17 of the 24 plants in the ferrous subcategory that recycle casting quench water recycle 98 percent or more of that water. Based on the water chemistry model, EPA estimates that 97.5 percent recycle of zinc casting quench water is achievable when make-up water of mean quality is available and 97 percent recycle is achievable when make-up water of poor quality is available indicating that high rate recycle is supportable. Based on demonstrated recycle practice in both ferrous and nonferrous casting quench operations, the BPT recycle rate for the zinc casting quench segment is 98 percent.

Die Casting

The model control technology is treatment of the entire process

wastewater flow in a lime and settle system which includes emulsion breaking, oil skimming, chemical oxidation by potassium permanganate, lime and polymer addition, settling, followed by recycle. Acid is added to the recycle system to control scale formation. Including the full measure of Option 2 treatment inside the recycle loop ensures that water quality after treatment is suitable for recycle.

The flow that forms the basis of the BPT effluent limitations (BPT flow) promulgated for zinc die casting is 2.07 gallons per ton of metal poured. The median applied flow rate of 41.4 gallons per ton was obtained from Tables V-3 and V-27. They show 27 plants reporting sufficient information to calculate a die casting applied flow rate. Plant 18139 has the median flow rate. Flow data from aluminum and zinc die casting operations are combined because these operations are very similar, and are often performed at the same plant using the same or similar equipment.

As stated above, during plant visits and sampling episodes, and upon evaluating industry questionnaire responses, EPA has observed that aluminum and zinc are often die cast in the same plant and that aluminum and zinc die casting operations may share a centralized recycle system. Because of the similarity between aluminum and zinc die casting, and the wastewater these operations generate, EPA has concluded that the recycle rate used as part of the basis for final regulations for these two operations should be the same. Across the aggregate of all aluminum and zinc die casting operations in the metal molding and casting data base, seven out of 11 plants that recycle die casting process water recycle 95 percent or more of that water. Based on the water chemistry model, EPA estimates that the achievable recycle rate of zinc die casting process water varies between 98 and 99 percent depending on available make-up water quality. Based on demonstrated recycle practice and confirmed as achievable using the water chemistry model, the BPT recycle rate for the zinc die casting segment is 95 percent.

Melting Furnace Scrubber

The model control technology is process water settling in a drag tank followed by recycle. Acid is added to the recycle system to control scale formation. The blowdown from the recycle system is treated in a lime and settle system which includes oil skimming, chemical oxidation by potassium permanganate, lime and polymer addition, and settling. Following the February 15, 1985 notice of data availability, EPA included chemical oxidation using potassium permanganate in the model BPT basis for the zinc melting furnace scrubber process segment. This was done to ensure that the phenol limitations would be achievable even where high levels of phenols would be present in the treatment system influent.

The flow that forms the basis of the BPT effluent limitations (BPT flow) promulgated for zinc melting furnace scrubber is 0.243 gallons per thousand standard cubic feet. The median applied

flow rate of 6.07 gallons per 1,000 SCF was obtained from Tables V-7, V-13, and V-28. They show 27 plants reporting sufficient information to calculate an applied flow rate. Plant 18139 has the median flow rate. Aluminum, copper, and zinc melting furnace scrubber data were combined to form the data for determining the zinc melting furnace scrubber applied flow rate. This was done because EPA did not believe that zinc melting furnace scrubbers could achieve a much lower applied flow rate than aluminum (11.7 gal/1,000 SCF) and copper scrubbers (4.29 gal/1,000 SCF), as the zinc data alone (0.385 gal/1,000 SCF) seem to indicate.

Four of the seven plants in the metal molding and casting data base that recycle zinc melting furnace scrubber water recycle 96 percent or more of the water. Based on the water chemistry model, EPA estimates that 100 percent recycle of zinc melting furnace scrubber water is achievable if make-up water of mean quality is available; 99.5 percent recycle is achievable if make-up water of poor quality is available. Based on demonstrated recycle practice and confirmed as achievable using the water chemistry model, the BPT recycle rate for the zinc die casting segment is 96 percent.

Mold Cooling

The model control technology is process water settling in a settling tank followed by recycle. Acid is added to the recycle system to control scale formation. In addition, cooling towers are included in the recycle loop to maintain a proper process water temperature. The blowdown from the recycle system is treated in a lime and settle system which includes oil skimming, lime and polymer addition, and settling.

The flow that forms the basis of BPT effluent limitations (BPT flow) promulgated for zinc mold cooling is 94.5 gallons per ton of metal poured. The median applied flow rate of 1,890 gallons per ton was obtained from Table V-29. That table shows seven plants reporting sufficient information to calculate an applied flow rate. Plant 10640 has the median flow rate.

Fifteen of the 25 plants in the metal molding and casting data base that recycle mold cooling water recycle 95 percent or more of that water. Based on demonstrated recycle practice, the BPT recycle rate for the zinc mold cooling segment is 95 percent.

NON-WATER QUALITY ASPECTS OF BPT

The following are the nonwater quality environmental impacts (including energy requirements) associated with the BPT effluent limitations guidelines.

Air Pollution

Imposition of BPT will not create any substantial air pollution problems. Minor very localized air pollution emissions currently exist in the ferrous casting subcategory where wastewaters are

used to quench the hot slag generated in the melting process. Also, water vapor containing some particulate matter is released from the cooling tower systems used in the casting quench and mold cooling process segments. However, none of these conditions currently are considered significant and no significant future impacts are expected as the result of these regulations.

Solid Waste

EPA estimates that application of the best practicable technology currently available will increase the quantity of solid wastes that must be landfilled by plants in the metal molding and casting category by about 522,000 kkg (575,000 tons) per year beyond current levels. Of that amount, 573,000 tons per year is sludge and 1,900 tons per year is oily waste. The Agency examined the solid wastes that would be generated by metal molding and casting processes using the model treatment technologies and has concluded that they are not hazardous under Section 3001 of the Resource Conservation and Recovery Act (RCRA).

Consumptive Water Loss

Compliance with the BPT effluent limitations guidelines is not expected to result in any significant incremental consumptive water loss compared to metal molding and casting plants current water usage.

Energy Requirements

EPA estimates that compliance with the BPT effluent limitations guidelines will result in a total electrical energy consumption of 19×10^6 kilowatt-hours per year. This is equivalent to an increase of about 0.06 percent over the 31.3×10^9 kilowatt-hours used in 1978 for production purposes.

Table IX-1

APPLIED FLOW RATES, RECYCLE RATES, AND DISCHARGE RATES THAT FORM THE BASIS OF BPT

Subcategory/Process Segment	Production Normalized Applied Flow Rate	Production Normalizing Parameter	Recycle Rate	Production Normalized Discharge Flow*
Aluminum				
Casting Cleaning	480 gal/ton	ton of metal poured	95%	24.0 gal/ton
Casting Quench	145 gal/ton	ton of metal poured	98%	2.90 gal/ton
Die Casting	41.4 gal/ton	ton of metal poured	95%	2.07 gal/ton
Dust Collection Scrubber	1.78 gal/1,000 SCF	1,000 SCF of air flow through the scrubber	98%	0.036 gal/1,000 SCF
Grinding Scrubber	0.063 gal/1,000 SCF	1,000 SCF of air flow through the scrubber	100%	0
Investment Casting	17,600 gal/ton	ton of metal poured	85%	2,640 gal/ton
Melting Furnace Scrubber	11.7 gal/1,000 SCF	1,000 SCF of air flow through the scrubber	96%	0.468 gal/1,000 SCF
Mold Cooling	1,850 gal/ton	ton of metal poured	95%	92.5 gal/ton
Copper				
Casting Quench	478 gal/ton	ton of metal poured	98%	9.56 gal/ton
Direct Chill Casting	5,780 gal/ton	ton of metal poured	95%	289 gal/ton
Dust Collection Scrubber	4.29 gal/1,000 SCF	1,000 SCF of air flow through the scrubber	98%	0.086 gal/1,000 SCF
Grinding Scrubber	0.111 gal/1,000 SCF	1,000 SCF of air flow through the scrubber	100%	0
Investment Casting	17,600 gal/ton	ton of metal poured	85%	2,640 gal/ton
Melting Furnace Scrubber	7.04 gal/1,000 SCF	1,000 SCF of air flow through the scrubber	96%	0.282 gal/1,000 SCF
Mold Cooling	2,450 gal/ton	ton of metal poured	95%	122 gal/ton
Ferrous				
Casting Cleaning	213 gal/ton	ton of metal poured	95%	10.7 gal/ton
Casting Quench	571 gal/ton	ton of metal poured	98%	11.4 gal/ton
Dust Collection Scrubber	3.0 gal/1,000 SCF	1,000 SCF of air flow through the scrubber	97%	0.090 gal/1,000 SCF
Grinding Scrubber	3.17 gal/1,000 SCF	1,000 SCF of air flow through the scrubber	100%	0
Investment Casting	17,600 gal/ton	ton of metal poured	85%	2,640 gal/ton
Melting Furnace Scrubber	10.5 gal/1,000 SCF	1,000 SCF of air flow through the scrubber	96%	0.420 gal/1,000 SCF

Table IX-1 (Continued)

APPLIED FLOW RATES, RECYCLE RATES, AND DISCHARGE RATES THAT FORM THE BASIS OF BPT

Subcategory/Process Segment	Production Normalized Applied Flow Rate	Production Normalizing Parameter	Recycle Rate	Production Normalized Discharge Flow*
Ferrous (Cont.)				
Mold Cooling	707 gal/ton	ton of metal poured	95%	35.4 gal/ton
Slag Quench	727 gal/ton	ton of metal poured	94%	43.6 gal/ton
Wet Sand Reclamation	895 gal/ton	ton of sand reclaimed	80%	179 gal/ton
Zinc				
Casting Quench	533 gal/ton	ton of metal poured	98%	10.7 gal/ton
Die Casting	41.4 gal/ton	ton of metal poured	95%	2.07 gal/ton
Melting Furnace Scrubber	6.07 gal/1,000 SCF	1,000 SCF of air flow through the scrubber	96%	0.243 gal/1,000 SCF
Mold Cooling	1,890 gal/ton	ton of metal poured	95%	94.5 gal/ton

TABLE IX-2

BPT LIMITATIONS* COVERING CONTINUOUS DIRECT DISCHARGES

Subcategory and Process Segment	TSS 30-Day Max.	TSS Daily Max.	Oil & Grease 30-Day Max.	Oil & Grease Daily Max.	Phenols(1) 30-Day Max.	Phenols(1) Daily Max.	Copper 30-Day Max.	Copper Daily Max.	Lead 30-Day Max.	Lead Daily Max.	Zinc 30-Day Max.	Zinc Daily Max.	pH
Aluminum													
Casting Cleaning	1.50	3.80	1.0	3.0	(3)	(3)	.0421	.0771	.039	.0791	.0431	.114	(2)
Casting Quench	.182	.46	.121	.363	(3)	(3)	.0051	.0093	.0047	.0096	.0052	.0138	(2)
Die Casting	.13	.33	.0864	.259	.0026	.0074	.0036	.0066	.0034	.0068	.0037	.0098	(2)
Dust Collection Scrubber	4.51	11.4	3.0	9.01	.09	.258	.126	.231	.117	.237	.129	.343	(2)
Grinding Scrubber	No Discharge of Pollutants												
Investment Casting	165	419	110	330	(3)	(3)	4.63	8.48	4.3	8.7	4.74	12.6	(2)
Melting Furnace Scrubber	58.6	148	39.1	117	1.17	3.36	1.64	3.01	1.52	3.09	1.68	4.45	(2)
Mold Cooling	5.79	14.7	3.86	11.6	(3)	(3)	.162	.297	.151	.305	.166	.44	(2)
Copper													
Casting Quench	0.598	1.52	0.399	1.2	(3)	(3)	.168	.0307	.0156	.0315	.0171	.0455	(2)
Direct Chill Casting	18.1	45.8	12.1	36.2	(3)	(3)	0.506	0.928	0.47	0.952	0.518	1.37	(2)
Dust Collection Scrubber	10.8	27.3	7.18	21.5	0.215	0.617	0.301	0.553	0.28	0.567	0.309	0.818	(2)
Grinding Scrubber	No Discharge of Pollutants												
Investment Casting	165	419	110	330	(3)	(3)	4.63	8.48	4.3	8.7	4.74	12.6	(2)
Melting Furnace Scrubber	35.3	89.4	23.5	70.6	0.706	2.02	0.988	1.81	0.918	1.86	1.01	2.68	(2)
Mold Cooling	7.63	19.3	5.09	15.3	(3)	(3)	0.214	0.392	0.199	0.402	0.219	0.58	(2)

* All limitations are in units of kg/1000 kkg (lb per million lb) of metal poured except for the Wet Sand Reclamation, Dust Collection Scrubber, and Melting Furnace Scrubber process segments. In the case of the latter two process segments, the limitations are in units of kg/62.3 million Sm^3 (lb per billion SCF) of air scrubbed; in the case of the former process segment, the limitations are in units of kg/1000 kkg (lb per million lb) of sand reclaimed.

(1) Total Phenols - Phenols as measured by the 4-aminoantipyrene method (4AAP).

(2) Within the range of 7.0 to 10.0 at all times.

(3) Not regulated at BPT for this process segment.

TABLE IX-2 (Continued)

BPT LIMITATIONS* COVERING CONTINUOUS DIRECT DISCHARGES

Subcategory and Process Segment	TSS 30-Day Max.	TSS Daily Max.	Oil & Grease 30-Day Max.	Oil & Grease Daily Max.	Phenols(1) 30-Day Max.	Phenols(1) Daily Max.	Copper 30-Day Max.	Copper Daily Max.	Lead 30-Day Max.	Lead Daily Max.	Zinc 30-Day Max.	Zinc Daily Max.	pH
Ferrous													
Casting Cleaning	0.67	1.7	0.446	1.34	(3)	(3)	0.0071	0.0129	0.0174	0.0353	0.025	0.0556	
Casting Quench	0.713	1.81	0.476	1.43	(3)	(3)	0.0076	0.0138	0.0185	0.0376	0.0266	0.0699	(2)
Dust Collection Scrubber	11.3	28.5	7.51	22.5	0.225	0.656	0.12	0.218	0.293	0.593	0.421	1.1	(2)
Grinding Scrubber	----------				No Discharge of Pollutants								
Investment Casting	165	419	110	330	(3)	(3)	1.76	3.19	4.3	8.7	6.17	16.2	(2)
Melting Furnace Scrubber	52.6	133	35	105	1.05	3.01	0.561	1.02	1.37	2.77	1.96	5.15	(2)
Mold Cooling	2.22	5.61	1.48	4.43	(3)	(3)	0.0236	0.0428	0.0576	0.117	0.0827	0.217	(2)
Slag Quench	2.73	6.91	1.82	5.46	(3)	(3)	0.0291	0.0527	0.0709	0.144	0.102	0.267	(2)
Wet Sand Reclamation	11.2	28.4	7.47	22.4	0.224	0.642	0.12	0.217	0.291	0.59	0.418	1.1	(2)
Zinc													
Casting Quench	0.67	1.7	0.446	1.34	(3)	(3)	0.0187	0.0344	0.0174	0.0353	0.0192	0.0509	(2)
Die Casting	0.13	.328	0.0864	0.259	0.0026	0.0074	0.0036	0.0066	0.0034	0.0068	0.0037	0.0098	(2)
Melting Furnace Scrubber	30.4	77.1	20.3	60.8	0.608	1.74	0.852	1.56	0.791	1.6	0.872	2.31	(2)
Mold Cooling	5.91	15	3.94	11.8	(3)	(3)	0.166	0.304	D.154	0.311	0.17	0.449	(2)

* All limitations are in units of kg/1000 kkg (lb per million lb) of metal poured except for the Wet Sand Reclamation, Dust Collection Scrubber, and Melting Furnace Scrubber process segments. In the case of the latter two process segments, the limitations are in units of kg/62.3 million Sm^3 (lb per billion SCF) of air scrubbed; in the case of the former process segment, the limitations are in units of kg/1000 kkg (lb per million lb) of sand reclaimed.

(1) Total Phenols - Phenols as measured by the 4-aminoantipyrene method (4AAP).

(2) Within the range of 7.0 to 10.0 at all times

(3) Not regulated at BPT for this process segment.

TABLE IX-3

BPT LIMITATIONS* COVERING NON-CONTINUOUS DIRECT WASTEWATER DISCHARGES

Subcategory and Process Segment	TSS 30-Day Max.	TSS Daily Max.	Oil & Grease 30-Day Max.	Oil & Grease Daily Max.	Phenols(1) 30-Day Max.	Phenols(1) Daily Max.
Aluminum						
Casting Cleaning	15(12/x)	38(12/x)	10(12/x)	30(12/x)	(3)	(3)
Casting Quench	15(1.45/x)	38(1.45/x)	10(1.45/x)	30(1.45/x)	(3)	(3)
Die Casting	15(1.04/x)	38(1.04/x)	10(1.04/x)	30(1.04/x)	0.3(1.04/x)	.86(1.04/x)
Dust Collection Scrubber	15(.D36/y)	38(.036/y)	10(.D36/y)	30(.036/y)	0.3(.036/y)	.86(.036/y)
Grinding Scrubber	----------	----------	No Discharge of Pollutants	----------	----------	----------
Investment Casting	15(1320/x)	38(1320/x)	10(1320/x)	30(1320/x)	(3)	(3)
Melting Furnace Scrubber	15(.468/y)	38(.468/y)	10(.468/y)	30(.468/y)	0.3(.468/y)	.86(.468/y)
Mold Cooling	15(46.3/x)	38(46.3/x)	10(46.3/x)	30(46.3/x)	(3)	(3)
Copper						
Casting Quench	15(4.8/x)	38(4.8/x)	10(4.8/x)	30(4.8/x)	(3)	(3)
Direct Chill Casting	15(145/x)	38(145/x)	10(145/x)	30(145/x)	(3)	(3)
Dust Collection Scrubber	15(.086/y)	38(.086/y)	10(.086/y)	30(.086/y)	0.3(.086/y)	.86(.086/y)
Grinding Scrubber	----------	----------	No Discharge of Pollutants	----------	----------	----------
Investment Casting	15(1320/x)	38(1320/x)	10(1320/x)	30(1320/x)	(3)	(3)
Melting Furnace Scrubber	15(.282/y)	38(.282/y)	10(.282/y)	30(.282/y)	0.3(.282/y)	.86(.282/y)
Mold Cooling	15(61/x)	38(61/x)	10(61/x)	30(61/x)	(3)	(3)

* All 30-Day Maximum and Daily Maximum limitations are in mg/l units. The annual average limitations are in units of kg/1000 kkg (lb per million lb) of metal poured except for the Wet Sand Reclamation, Dust Collection Scrubber, and Melting Furnace Scrubber process segments. In the case of the latter two process segments, the annual average limitations are in units of kg/62.3 million Sm^3 (lb per billion SCF) of air scrubbed; in the case of the former process segment, the limitations are in units of kg/1000 kkg (lb per million lb) of sand reclaimed.

(1) Total Phenols - Phenols as measured by the 4-aminoantipyrene method (4AAP).

(2) Within the range of 7.0 to 10.0 at all times.

(3) Not regulated at BPT for this process segment.

X = Actual normalized process wastewater flow (in gallons per 1,000 pounds of metal poured) for the specific plant.

Y = Actual normalized process wastewater flow (in gallons per 1,000 SCF of air scrubbed) for the specific plant.

TABLE IX-3 (Continued)

BPT LIMITATIONS* COVERING NON-CONTINUOUS DIRECT WASTEWATER DISCHARGES

Subcategory and Process Segment	Copper 30-Day Max.	Copper Daily Max.	Lead 30-Day Max.	Lead Daily Max.	Zinc 30-Day Max.	Zinc Daily Max.	pH
Aluminum							
Casting Cleaning	.42(12/x)	.77(12/x)	.39(12/x)	.79(12/x)	.43(12/x)	1.14(12/x)	(2)
Casting Quench	.42(1.45/x)	.77(1.45/x)	.39(1.45/x)	.79(1.45/x)	.43(1.45/x)	1.14(1.45/x)	(2)
Die Casting	.42(1.04/x)	.77(1.04/x)	.39(1.04/x)	.79(1.04/x)	.43(1.04/x)	1.14(1.04/x)	(2)
Dust Collection Scrubber	.42(.036/y)	.77(.036/y)	.39(.036/y)	.79(.036/y)	.43(.036/y)	1.14(.036/y)	(2)
Grinding Scrubber	----------No Discharge of Pollutants----------						
Investment Casting	.42(1320/x)	.77(1320/x)	.39(1320/x)	.79(1320/x)	.43(1320/x)	1.14(1320/x)	(2)
Melting Furnace Scrubber	.42(.468/y)	.77(.468/y)	.39(.468/y)	.79(.468/y)	.43(.468/y)	1.14(.468/y)	(2)
Mold Cooling	.42(46.3/x)	.77(46.3/x)	.39(46.3/x)	.79(46.3/x)	.43(46.3/x)	1.14(46.3/x)	(2)
Copper							
Casting Quench	.42(4.8/x)	.77(4.8/x)	.39(4.8/x)	.79(4.8/x)	.43(4.8/x)	1.14(4.8/x)	(2)
Direct Chill Casting	.42(145/x)	.77(145/x)	.39(145/x)	.79(145/x)	.43(145/x)	1.14(145/x)	(2)
Dust Collection Scrubber	.42(.086/y)	.77(.086/y)	.39(.086/y)	.79(.086/y)	.43(.086/y)	1.14(.086/y)	(2)
Grinding Scrubber	----------No Discharge of Pollutants----------						
Investment Casting	.42(1320/x)	.77(1320/x)	.39(1320/x)	.79(1320/x)	.43(1320/x)	1.14(1320/x)	(2)
Melting Furnace Scrubber	.42(.282/y)	.77(.282/y)	.39(.282/y)	.79(.282/y)	.43(.282/y)	1.14(.282/y)	(2)
Mold Cooling	.42(61/x)	.77(61/x)	.39(61/x)	.79(61/x)	.43(61/x)	1.14(61/x)	(2)

* All 30-Day Maximum and Daily Maximum limitations are in mg/l units. The annual average limitations are in units of kg/1000 kkg (lb per million lb) of metal poured except for the Wet Sand Reclamation, Dust Collection Scrubber, and Melting Furnace Scrubber process segments. In the case of the latter two process segments, the annual average limitations are in units of kg/62.3 million Sm^3 (lb per billion SCF) of air scrubbed; in the case of the former process segment, the limitations are in units of kg/1000 kkg (lb per million lb) of sand reclaimed.

(1) Total Phenols - Phenols as measured by the 4-aminoantipyrene method (4AAP).

(2) Within the range of 7.0 to 10.0 at all times.

(3) Not regulated at BPT for this process segment.

X = Actual normalized process wastewater flow (in gallons per 1,000 pounds of metal poured) for the specific plant.

Y = Actual normalized process wastewater flow (in gallons per 1,000 SCF of air scrubbed) for the specific plant.

TABLE IX-3 (Continued)

BPT LIMITATIONS* COVERING NON-CONTINUOUS DIRECT WASTEWATER DISCHARGES

Subcategory and Process Segment	TSS 30-Day Max.	TSS Daily Max.	Oil & Grease 30-Day Max.	Oil & Grease Daily Max.	Phenols(1) 30-Day Max.	Phenols(1) Daily Max.
Ferrous						
Casting Cleaning	15(5.35/x)	38(5.35/x)	10(5.35/x)	30(5.35/x)	(3)	(3)
Casting Quench	15(5.7/x)	38(5.7/x)	10(5.7/x)	30(5.7/x)	(3)	(3)
Dust Collection Scrubber	15(.09/y)	38(.09/y)	10(.09/y)	30(.09/y)	.3(.09/y)	.86(.09/y)
Grinding Scrubber	No Discharge of Pollutants					
Investment Casting	15(1320/x)	38(1320/x)	10(1320/x)	30(1320/x)	(3)	(3)
Melting Furnace Scrubber	15(.42/y)	38(.42/y)	10(.42/y)	30(.42/y)	.3(.42/y)	.86(.42/y)
Mold Cooling	15(17.7/x)	38(17.7/x)	10(17.7/x)	30(17.7/x)	(3)	(3)
Slag Quench	15(21.8/x)	38(21.8/x)	10(21.8/x)	30(21.8/x)	(3)	(3)
Wet Sand Reclamation	15(89.5/z)	38(89.5/z)	10(89.5/z)	30(89.5/z)	.3(89.5/z)	.86(89.5/z)
Zinc						
Casting Quench	15(5.35/x)	38(5.35/x)	10(5.35/x)	30(5.35/x)	(3)	(3)
Die Casting	15(1.04/x)	38(1.04/x)	10(1.04/x)	30(1.04/x)	.3(1.04/x)	.86(1.04/x)
Melting Furnace Scrubber	15(.243/y)	38(.243/y)	10(.243/y)	30(.243/y)	.3(.243/y)	.86(.243/y)
Mold Cooling	15(47.3/x)	38(47.3/x)	10(47.3/x)	30(47.3/x)	(3)	(3)

* All 30-Day Maximum and Daily Maximum limitations are in mg/l units. The annual average limitations are in units of kg/1000 kkg (lb per million lb) of metal poured except for the Wet Sand Reclamation, Dust Collection Scrubber, and Melting Furnace Scrubber process segments. In the case of the latter two process segments, the annual average limitations are in units of kg/62.3 million Sm^3 (lb per billion SCF) of air scrubbed; in the case of the former process segment, the limitations are in units of kg/1000 kkg (lb per million lb) of sand reclaimed.

(1) Total Phenols - Phenols as measured by the 4-aminoantipyrene method (4AAP).

(2) Within the range of 7.0 to 10.0 at all times.

(3) Not regulated at BPT for this process segment.

X = Actual normalized process wastewater flow (in gallons per 1,000 pounds of metal poured) for the specific plant.

Y = Actual normalized process wastewater flow (in gallons per 1,000 SCF of air scrubbed) for the specific plant.

Z = Actual normalized process wastewater flow (in gallons per 1,000 pounds of sand reclaimed) for the specific plant.

TABLE IX-3 (Continued)

BPT LIMITATIONS* COVERING NON-CONTINUOUS DIRECT WASTEWATER DISCHARGES

Subcategory and Process Segment	Copper 30-Day Max.	Copper Daily Max.	Lead 30-Day Max.	Lead Daily Max.	Zinc 30-Day Max.	Zinc Daily Max.	pH
Ferrous							
Casting Cleaning	.16(5.35/x)	.29(5.35/x)	.39(5.35/x)	.79(5.35/x)	.56(5.35/x)	1.47(5.35/x)	(2)
Casting Quench	.16(5.7/x)	.29(5.7/x)	.39(5.7/x)	.79(5.7/x)	.56(5.7/x)	1.47(5.7/x)	(2)
Dust Collection Scrubber	.16(.09/y)	.29(.09/y)	.39(.09/y)	.79(.09/y)	.56(.09/y)	1.47(.09/y)	(2)
Grinding Scrubber	No Discharge of Pollutants						
Investment Casting	.16(1320/x)	.29(1320/x)	.39(1320/x)	.79(1320/x)	.56(1320/x)	1.47(1320/x)	(2)
Melting Furnace Scrubber	.16(.42/y)	.29(.42/y)	.39(.42/y)	.79(.42/y)	.56(.42/y)	1.47(.42/y)	(2)
Mold Cooling	.16(17.7/x)	.29(17.7/x)	.39(17.7/x)	.79(17.7/x)	.56(17.7/x)	1.47(17.7/x)	(2)
Slag Quench	.16(21.8/x)	.29(21.8/x)	.39(21.8/x)	.79(21.8/x)	.56(21.8/x)	1.47(21.8/x)	(2)
Wet Sand Reclamation	.16(89.5/z)	.29(89.5/z)	.39(89.5/z)	.79(89.5/z)	.56(89.5/z)	1.47(89.5/z)	(2)
Zinc							
Casting Quench	.42(5.35/x)	.77(5.35/x)	.39(5.35/x)	.79(5.35/x)	.43(5.35/x)	1.14(5.35/x)	(2)
Die Casting	.42(1.04/x)	.77(1.04/x)	.39(1.04/x)	.79(1.04/x)	.43(1.04/x)	1.14(1.04/x)	(2)
Melting Furnace Scrubber	.42(.243/y)	.77(.243/y)	.39(.243/y)	.79(.243/y)	.43(.243/y)	1.14(.243/y)	(2)
Mold Cooling	.42(47.3/x)	.77(47.3/x)	.39(47.3/x)	.79(47.3/x)	.43(47.3/x)	1.14(47.3/x)	(2)

* All 30-Day Maximum and Daily Maximum limitations are in mg/l units. The annual average limitations are in units of kg/1000 kkg (lb per million lb) of metal poured except for the Wet Sand Reclamation, Dust Collection Scrubber, and Melting Furnace Scrubber process segments. In the case of the latter two process segments, the annual average limitations are in units of kg/62.3 million Sm^3 (lb per billion SCF) of air scrubbed; in the case of the former process segment, the limitations are in units of kg/1000 kkg (lb per million lb) of sand reclaimed.

(1) Total Phenols - Phenols as measured by the 4-aminoantipyrene method (4AAP).

(2) Within the range of 7.0 to 10.0 at all times.

(3) Not regulated at BPT for this process segment.

X = Actual normalized process wastewater flow (in gallons per 1,000 pounds of metal poured) for the specific plant.

Y = Actual normalized process wastewater flow (in gallons per 1,000 SCF of air scrubbed) for the specific plant.

Z = Actual normalized process wastewater flow (in gallons per 1,000 pounds of sand reclaimed) for the specific plant.

SECTION X

BEST AVAILABLE TECHNOLOGY ECONOMICALLY ACHIEVABLE

INTRODUCTION

As a result of the Clean Water Act of 1977, the achievement of the best available technology economically achievable (BAT) has become the principal means of controlling wastewater discharges of toxic pollutants. The factors considered in assessing the BAT include the age of equipment and facilities involved, the process employed, process changes, nonwater quality environmental impacts (including energy requirements), and the costs of application of such technology. BAT effluent limitations guidelines, in general represent the best existing economically achievable performance of plants of various ages, sizes, processes, or other characteristics. Emphasis is placed on technologies that further reduce toxic pollutants discharged after the application of BPT. Those categories whose existing performance is uniformly inadequate may require a transfer of BAT from a different subcategory or category. BAT may include process changes or internal controls, even when these are not common industry practice. BAT limitations may be based upon plant processes and control and treatment technologies whose performance is established by pilot studies.

TECHNICAL APPROACH TO BAT

The Agency reviewed and evaluated a wide range of technology options to ensure that the most effective technologies were used as the basis of BAT. To accomplish this, the Agency examined three technology alternatives which could be applied to metal molding and casting as BAT options and which would represent substantial progress towards the reduction of discharges of pollutants above and beyond the reductions achieved by BPT. The statutory assessment of BAT considers costs, but does not require a balancing of costs against effluent reduction benefits [see Weyerhaeuser v. Costle, 11 ERC 2149 (D.C., Cir. 1978)]; however, in assessing the BAT effluent limitations guidelines for the metal molding and casting category, the Agency has carefully considered the reasonableness of projected compliance costs, primarily by assessing economic impacts in terms of plant closures and job losses.

In summary, EPA considered three treatment technologies as the basis for BAT for the metal molding and casting category. They are:

BPT: Option 2 (recycle, lime and settle) for 25 process segments in four subcategories and complete recycle/no discharge for the grinding scrubber process segments in the aluminum, copper, and ferrous subcategories.

Option 3: Recycle, Lime and Settle, Filtration: This Option adds filtration of the BPT treatment effluent for all process segments (except grinding scrubbers) to remove residuals of toxic heavy metals and suspended solids. Filtration technology is considered by EPA to be among the best available technologies (BAT) for further treatment of lime and settle (BPT) effluents. This technology is available and has been applied on a full-scale basis by at least 32 plants in this industry. It is also in widespread use in other metals categories.

Option 4: Recycle, Lime and Settle, Filtration, Activated Carbon Adsorption: This Option adds removal of residuals of toxic organic compounds by granular activated carbon columns. This Option was considered for application in further treating Option 3 effluents in the event that treatable concentrations of organics would be present after the application of the Option 3 model technology. This is a technology that is commonly evaluated as a means of removing residual organic compounds. The technology has limited application in the metal molding and casting industry (it has been applied at three metal molding and casting plants) and is an available technology.

The treatment options described above are discussed in detail, including which pollutants each controls, in Section VII. The treatment effectiveness that can be achieved by the major technologies, including those achievable by the BAT model technologies also is presented in Section VII.

The Agency also considered including second stage precipitation (sulfide or carbonate) to effect further removal of toxic metals.

BAT OPTION SELECTION

EPA has promulgated BAT mass-based effluent limitations guidelines for all of the metal molding and casting subcategories except the magnesium casting subcategory. For the magnesium subcategory, EPA determined that compliance with BAT limitations based on the control technologies considered as the basis for final regulations in the metal molding and casting category would not be economically achievable. The Agency's economic impact analysis indicates that one of two direct dischargers would close if required to install and operate the BPT model technology.

EPA has selected Option 3 (recycle, lime and settle, filtration) as the technology basis for BAT effluent limitations guidelines for the copper and zinc subcategories, and for the major portions of the ferrous subcategory (all plants except those that cast steel and small plants that cast malleable iron). As discussed

previously in Section VII of this document, filtration technology is demonstrated in the metal molding and casting industry and is capable of effecting further removal of toxic metal pollutants still remaining in BPT effluents. EPA has transferred treatment effectiveness data for multimedia filtration to the metal molding and casting category. As discussed in Section VII, EPA has data for three of the 32 metal molding and casting plants that use end-of-pipe filtration technology. However, none of these plants employs all aspects of the model technologies identified by EPA for consideration as the basis for BAT effluent limitations guidelines. Thus, data from these three plants cannot serve as the basis for treatment effectiveness concentrations representative of recycle, lime and settle, plus filtration. Achievable performance of multimedia filtration of lime and settle effluent is discussed in detail in Section VII of this document.

Upon completing review of treatment system performance in the metal molding and casting industry, EPA found that those plants that employed effective oil and grease removal technologies effectively removed toxic organic pollutants. For this reason, EPA rejected Option 4 as the technology basis for nationally-applicable effluent limitations guidelines and standards. Treatment effectiveness information for activated carbon technology based on theoretical treatability concentrations is presented in Section VII of this document. Some plants may elect to use activated carbon technology.

The Agency has not adopted BAT limitations based upon residual metals removal either by second stage sulfide precipitation or by second stage carbonate precipitation. EPA has determined that the concentrations of metals residuals that remain after the application of lime and settle treatment technology are amenable to effective removal by the application of filtration after lime and settle. For this industry, the Agency believes that filtration would be effective and less costly than the application of a second metals precipitation and clarification step.

BAT effluent limitations guidelines for the smallest plants in the ferrous subcategory which cast primarily malleable iron and pour less than 3,557 tons of metal per year are based on recycle, lime and settle. The Agency's economic impact analysis determined that the cost of complying with effluent limitations based on filtration potentially may cause closure of one of three malleable iron plants in this size group. Therefore, EPA determined that the addition of filtration would not be economically achievable for this subcategory segment. Accordingly, the Agency is not basing BAT effluent limitations on recycle, lime and settle, and filtration for the smallest malleable iron plants.

The BAT effluent limitations are based on the same control and treatment technologies (recycle, lime and settle) as BPT for all plants in the aluminum subcategory and for those plants in the

ferrous subcategory that cast primarily steel.

For the aluminum subcategory, EPA estimates that filtration would remove an additional 0.003 kg per plant per day (0.006 lb per plant per day) of toxic metals. Aluminum subcategory wastewater discharges are comprised primarily of zinc, nickel, and copper. This contrasts with the zinc subcategory where a substantial portion of the total toxic metals discharged is lead, which is highly toxic, and the copper subcategory where treatable levels of cadmium, an extremely toxic metal, remain after the application of lime and settle treatment. The incremental costs of the effluent reductions that filtration would achieve are $0.31 million in investment costs and $0.26 million in total annualized costs (1985 dollars). The Agency believes that, in light of all these factors, filtration should not be the technology basis for BAT effluent limitations for the aluminum subcategory.

For the steel segment of the ferrous subcategory, .EPA estimates that filtration would remove an additional 0.082 kg per plant per day (0.18 lb per plant per day) of toxic metals. These removals would consist mainly of zinc and nickel. The incremental costs of these incremental effluent reductions would be $0.48 million in investment costs and $0.29 million in total annualized costs (1985 dollars). The steel segment has not recovered from the depressed conditions it has experienced in recent years; 1984 shipments were only about 51 percent of those in 1978. The Agency believes that, in light of all these factors, filtration should not be the technology basis for BAT effluent limitations for plants in the ferrous subcategory that cast primarily steel.

REGULATED POLLUTANT PARAMETERS

As explained in Section V of this document, EPA recalculated raw wastewater characteristics for each of the metal molding and casting process segments in response to comments, principally those asserting that the raw waste loads for certain segments appeared to be in error. (Other comments noted that data were improperly allocated to individual process segments.) In analyzing the revised raw wastewater characteristics taking into account raw waste variability, the Agency anticipates that copper, lead, and zinc will be found in treatable concentrations across all process segments. EPA has reached this conclusion, in part, because, where copper, lead, or zinc data were unavailable for a process segment, treatable levels of the toxic metal pollutant were present in the discharges from all other regulated processes employed within the subcategory for which data are available. Therefore, the Agency is regulating copper, lead, and zinc for all process segments. The re-evaluation of the raw waste characteristics for the category is described in Sections V and VI and elsewhere in the record of this rulemaking.

Additionally, after re-evaluating the raw waste load data, the Agency found total phenols (4AAP) above treatable concentrations in raw wastewaters for ten process segments and toxic organic

pollutants in treatable concentrations in raw wastewaters for 22 process segments. Because EPA has not identified any technologies that will result in significant incremental reductions in total phenols, total phenols have been regulated at the BPT level in the following 10 process segments:

Aluminum Subcategory:	die casting dust collection scrubber melting furnace scrubber
Copper Subcategory:	dust collection scrubber melting furnace scrubber
Ferrous Subcategory:	dust collection scrubber melting furnace scrubber wet sand reclamation
Zinc Subcategory:	die casting melting furnace scrubber

EPA is not establishing BAT effluent limitations guidelines for toxic organic compounds because the Agency determined that compliance with the BPT effluent limitations for oil and grease provides effective removal of toxic organic compounds. Filtration is not expected to achieve appreciable incremental removals of toxic organics from metal molding and casting wastewaters over those achieved by oil removal technologies.

EPA also considered establishing BAT effluent limitations guidelines for the following toxic metals in the following subcategories:

Copper Subcategory:	cadmium, chromium, nickel
Ferrous Subcategory:	antimony, cadmium, chromium, nickel, selenium

These pollutants were found at treatable levels in those subcategories. EPA has decided not to establish specific limitations for these metals because they will be effectively controlled when the regulated pollutants are controlled to the specified BAT levels. This approach is technically justified since the treatable concentrations used for lime precipitation and sedimentation technology are based on optimized treatment for concomitant multiple metals removal. Thus, even though metals have somewhat different theoretical solubilities, they will be removed at very nearly the same rate in lime precipitation and sedimentation treatment system operated for multiple metals removal. Similarly, filtration removes precipitated metals nonpreferentially.

BAT FLOW

EPA established the flow bases of BPT on the lowest flow rates that the Agency believed were generally achievable for each

subcategory segment (see Section IX). Thus, the flow bases of BPT also represent the best available flow rates for this point source category. BAT normalized flows may be found in Table X-1.

BAT EFFLUENT LIMITATIONS

The BAT mass limitations (mass of pollutant allowed to be discharged per mass of metal poured, mass of sand reclaimed, or volume of wet scrubber air flow) are presented in Table X-2. These limitations were calculated for each regulated pollutant in each process segment as follows: the BAT normalized flow for each discharge segment (see Table X-1) was multiplied by the one-day maximum and by the maximum monthly average treatment effectiveness concentrations (see Tables VII-12 and VII-14) corresponding to the the BAT technology option selected for each subcategory. As explained in Section VII, the maximum monthly average treatment effectiveness concentration is based on the average of 10 samples over the period of a month.

The BAT limitations presented at proposal assumed that discharges from metal molding and casting plants would always be on a continuous basis. Information submitted in comments and confirmed by EPA indicate that treatment may be done on a batch basis with discharge on an intermittent basis.

To allow this practice to continue where plants find batch treatment to be an effective control technique, the final regulations contain provisions that would allow metal molding and casting plants to discharge on an intermittent basis provided that they comply with annual average BAT limitations that are equivalent to the BAT effluent limitations applicable to continuous discharging plants. Plants are eligible for the annual average limitations and standards where wastewaters are stored for periods in excess of 24 hours to be treated on a batch basis. NPDES permits established for these "noncontinuous" discharging plants must contain concentration-based maximum day and maximum for monthly average limitations established for continuous discharging plants. BAT effluent limitations applicable to intermittent discharging plants are shown in Table X-3.

COST OF APPLICATION AND EFFLUENT REDUCTIONS BENEFITS

Implementation of the BAT effluent limitations will remove an additional 3,100 kg/yr (6,800 lb/yr) of toxic metals beyond BPT, at a total incremental investment cost (beyond equipment in-place) of $3.9 million and an incremental total annual cost of $2.3 million (1985 dollars). EPA has found this to be reasonable further progress in reducing the discharge of pollutants from those levels discharged after application of BPT technology.

NON-WATER QUALITY ASPECTS OF BAT

The following are the non-water quality environmental impacts (including energy requirements) associated with the BAT effluent

limitations guidelines.

Air Pollution

Application of the BAT will not create any incremental air pollution problems beyond those that would occur through the application of the best practicable control technology currently available. Filtration does not emit pollutants to the air.

Solid Waste

EPA estimates that application of the best available technology economically achievable will increase the quantity of sludges that must be landfilled by plants in the metal molding and casting category by about 240 kkg (265 tons) per year beyond BPT levels. The increase in the quantity of oily wastes generated will be negligible. As discussed in Section VIII of this document, the Agency examined the solid wastes that would be generated by metal molding and casting processes using the model treatment technologies and has concluded that they are not likely to be hazardous under Section 3001 of the Resource Conservation and Recovery Act (RCRA). Even though metal molding and casting wastes are not identified as hazardous, they still must be disposed of in a manner that will not violate the open dumping prohibition of section 4005 of RCRA.

Consumptive Water Loss

The application of filtration technology will not result in any significant evaporation of wastewater. Therefore, compliance with the BAT effluent limitations guidelines is not expected to result in any incremental consumptive water loss compared to that which would occur as a result of compliance with the BPT effluent limitations guidelines.

Energy Requirements

EPA estimates that compliance with the BAT effluent limitation guidelines will result in a total electrical energy consumption of 4.2×10^6 kilowatt-hours per year in addition to the energy usage to comply with BPT. This is equivalent to an increase of about 0.013 percent over the 31.3×10^9 kilowatt-hours used in 1978 for production purposes.

Table X-1

APPLIED FLOW RATES, RECYCLE RATES, AND DISCHARGE RATES THAT FORM THE BASIS OF BAT

Subcategory/Process Segment	Production Normalized Applied Flow Rate	Production Normalizing Parameter	Recycle Rate	Production Normalized Discharge Flow*
Aluminum				
Casting Cleaning	480 gal/ton	ton of metal poured	95%	24.0 gal/ton
Casting Quench	145 gal/ton	ton of metal poured	98%	2.90 gal/ton
Die Casting	41.4 gal/ton	ton of metal poured	95%	2.07 gal/ton
Dust Collection Scrubber	1.78 gal/1,000 SCF	1,000 SCF of air flow through the scrubber	98%	0.036 gal/1,000 SCF
Grinding Scrubber	0.063 gal/1,000 SCF	1,000 SCF of air flow through the scrubber	100%	0
Investment Casting	17,600 gal/ton	ton of metal poured	85%	2,640 gal/ton
Melting Furnace Scrubber	11.7 gal/1,000 SCF	1,000 SCF of air flow through the scrubber	96%	0.468 gal/1,000 SCF
Mold Cooling	1,850 gal/ton	ton of metal poured	95%	92.5 gal/ton
Copper				
Casting Quench	478 gal/ton	ton of metal poured	98%	9.56 gal/ton
Direct Chill Casting	5,780 gal/ton	ton of metal poured	95%	289 gal/ton
Dust Collection Scrubber	4.29 gal/1,000 SCF	1,000 SCF of air flow through the scrubber	98%	0.086 gal/1,000 SCF
Grinding Scrubber	0.111 gal/1,000 SCF	1,000 SCF of air flow through the scrubber	100%	0
Investment Casting	17,600 gal/ton	ton of metal poured	85%	2,640 gal/ton
Melting Furnace Scrubber	7.04 gal/1,000 SCF	1,000 SCF of air flow through the scrubber	96%	0.282 gal/1,000 SCF
Mold Cooling	2,450 gal/ton	ton of metal poured	95%	122 gal/ton
Ferrous				
Casting Cleaning	213 gal/ton	ton of metal poured	95%	10.7 gal/ton
Casting Quench	571 gal/ton	ton of metal poured	98%	11.4 gal/ton
Dust Collection Scrubber	3.0 gal/1,000 SCF	1,000 SCF of air flow through the scrubber	97%	0.090 gal/1,000 SCF
Grinding Scrubber	3.17 gal/1,000 SCF	1,000 SCF of air flow through the scrubber	100%	0
Investment Casting	17,600 gal/ton	ton of metal poured	85%	2,640 gal/ton
Melting Furnace Scrubber	10.5 gal/1,000 SCF	1,000 SCF of air flow through the scrubber	96%	0.420 gal/1,000 SCF

Table X-1 (Continued)

APPLIED FLOW RATES, RECYCLE RATES, AND DISCHARGE RATES THAT FORM THE BASIS OF BAT

Subcategory/Process Segment	Production Normalized Applied Flow Rate	Production Normalizing Parameter	Recycle Rate	Production Normalized Discharge Flow*
Ferrous (Cont.)				
Mold Cooling	707 gal/ton	ton of metal poured	95%	35.4 gal/ton
Slag Quench	727 gal/ton	ton of metal poured	94%	43.6 gal/ton
Wet Sand Reclamation	895 gal/ton	ton of sand reclaimed	80%	179 gal/ton
Zinc				
Casting Quench	533 gal/ton	ton of metal poured	98%	10.7 gal/ton
Die Casting	41.4 gal/ton	ton of metal poured	95%	2.07 gal/ton
Melting Furnace Scrubber	6.07 gal/1,000 SCF	1,000 SCF of air flow through the scrubber	96%	0.243 gal/1,000 SCF
Mold Cooling	1,890 gal/ton	ton of metal poured	95%	94.5 gal/ton

*Flow basis for mass limitations.

TABLE X-2

BAT LIMITATIONS* COVERING CONTINUOUS DIRECT DISCHARGES

Subcategory and Process Segment	Phenols(1) 30-Day Max.	Phenols(1) Daily Max.	Copper 30-Day Max.	Copper Daily Max.	Lead 30-Day Max.	Lead Daily Max.	Zinc 30-Day Max.	Zinc Daily Max.	pH
Aluminum									
Casting Cleaning	(3)	(3)	.0421	.0771	.039	.0791	.0431	.114	(2)
Casting Quench	(3)	(3)	.0051	.0093	.0047	.0096	.0052	.0138	(2)
Die Casting	.0026	.0074	.0036	.0066	.0034	.0068	.0037	.0098	(2)
Dust Collection Scrubber	.09	.258	.126	.231	.117	.237	.129	.343	(2)
Grinding Scrubber	----------No Discharge of Pollutants----------								
Investment Casting	(3)	(3)	4.63	8.48	4.3	8.7	4.74	12.6	(2)
Melting Furnace Scrubber	1.17	3.36	1.64	3.01	1.52	3.09	1.68	4.45	(2)
Mold Cooling	(3)	(3)	.162	.297	.151	.305	.166	.44	(2)
Copper									
Casting Quench	(3)	(3)	.0168	.0307	.0104	.0211	.0116	.0303	(2)
Direct Chill Casting	(3)	(3)	.506	.928	.314	.639	.35	.916	(2)
Dust Collection Scrubber	.215	.617	.301	.553	.187	.38	.208	.545	(2)
Grinding Scrubber	----------No Discharge of Pollutants----------								
Investment Casting	(3)	(3)	4.63	8.48	2.86	5.84	3.19	8.37	(2)
Melting Furnace Scrubber	.706	2.02	.988	1.81	.612	1.25	.673	1.79	(2)
Mold Cooling	(3)	(3)	.214	.392	.132	.27	.148	.387	(2)

* All limitations are in units of kg/1000 kkg (lb per million lb) of metal poured except for the Wet Sand Reclamation, Dust Collection Scrubber, and Melting Furnace Scrubber process segments. In the case of the latter two process segments, the limitations are in units of kg/62.3 million Sm^3 (lb per billion SCF) of air scrubbed; in the case of the former process segment, the limitations are in units of kg/1000 kkg (lb per million lb) of sand reclaimed.

(1) Total Phenols - Phenols as measured by the 4-aminoantipyrene method (4AAP).

(2) Within the range of 7.0 to 10.0 at all times.

(3) Not regulated at BAT for this process segment.

TABLE X-2 (Continued)

Subcategory and Process Segment	Phenols(1) 30-Day Max.	Phenols(1) Daily Max.	Copper 30-Day Max.	Copper Daily Max.	Lead 30-Day Max.	Lead Daily Max.	Zinc 30-Day Max.	Zinc Daily Max.	pH
Ferrous(4)									
Casting Cleaning	(3)	(3)	.0071	.0129	.0116	.0237	.0165	.0437	(2)
Casting Quench	(3)	(3)	.0076	.0138	.0124	.0252	.0176	.0466	(2)
Dust Collection Scrubber	.225	.646	.12	.218	.195	.398	.278	.736	(2)
Grinding Scrubber	----------No Discharge of Pollutants----------								
Investment Casting	(3)	(3)	1.76	3.19	2.86	5.84	4.07	10.8	(2)
Melting Furnace Scrubber	1.05	3.01	.561	1.02	.911	1.86	1.3	3.44	(2)
Mold Cooling	(3)	(3)	.0236	.0428	.0384	.0783	.0546	.145	(2)
Slag Quench	(3)	(3)	.0291	.0527	.0473	.0964	.0673	.178	(2)
Wet Sand Reclamation	.224	.642	.12	.217	.194	.396	.276	.732	(2)
Ferrous(5)									
Casting Cleaning	(3)	(3)	.0071	.0129	.0174	.0353	.025	.0656	(2)
Casting Quench	(3)	(3)	.0076	.0138	.0185	.0376	.0266	.0699	(2)
Dust Collection Scrubber	.225	.656	.12	.218	.293	.593	.421	1.1	(2)
Grinding Scrubber	----------No Discharge of Pollutants----------								
Investment Casting	(3)	(3)	1.76	3.19	4.3	8.7	6.17	16.2	(2)
Melting Furnace Scrubber	1.05	3.01	.561	1.02	1.37	2.77	1.96	5.15	(2)
Mold Cooling	(3)	(3)	.0236	.0428	.0576	.117	.0827	.217	(2)
Slag Quench	(3)	(3)	.0291	.0527	.0709	.144	.102	.267	(2)
Wet Sand Reclamation	.224	.642	.12	.217	.291	.59	.418	1.1	(2)

* All limitations are in units of kg/1000 kkg (lb per million lb) of metal poured except for the Wet Sand Reclamation, Dust Collection Scrubber, and Melting Furnace Scrubber process segments. In the case of the latter two process segments, the limitations are in units of kg/62.3 million Sm^3 (lb per billion SCF) of air scrubbed; in the case of the former process segment, the limitations are in units of kg/1000 kkg (lb per million lb) of sand reclaimed.

(1) Total Phenols - Phenols as measured by the 4-aminoantipyrene method (4AAP).

(2) Within the range of 7.0 to 10.0 at all times.

(3) Not regulated at BAT for this process segment.

(4) Applicable to plants that cast primarily malleable iron where greater than 3,557 tons of metal are poured per year and to plants that cast primarily ductile or gray iron.

(5) Applicable to plants that cast primarily malleable iron where equal to or less than 3,557 tons of metal are poured per year and to plants that cast primarily steel.

TABLE X-2 (Continued)

Subcategory and Process Segment	Phenols(1) 30-Day Max.	Phenols(1) Daily Max.	Copper 30-Day Max.	Copper Daily Max.	Lead 30-Day Max.	Lead Daily Max.	Zinc 30-Day Max.	Zinc Daily Max.	pH
Zinc									
Casting Quench	(3)	(3)	.0187	.0344	.0116	.0237	.0129	.0339	(2)
Die Casting	.0026	.0074	.0036	.0066	.0022	.0046	.0025	.0066	(2)
Melting Furnace Scrubber	.608	1.74	.852	1.56	.527	1.07	.588	1.54	(2)
Mold Cooling	(3)	(3)	.166	.304	.103	.209	.114	.3	(2)

* All limitations are in units of kg/1000 kkg (lb per million lb) of metal poured except for the Wet Sand Reclamation, Dust Collection Scrubber, and Melting Furnace Scrubber process segments. In the case of the latter two process segments, the limitations are in units of kg/62.3 million Sm^3 (lb per billion SCF) of air scrubbed; in the case of the former process segment, the limitations are in units of kg/1000 kkg (lb per million lb) of sand reclaimed.

(1) Total Phenols - Phenols as measured by the 4-aminoantipyrene method (4AAP).

(2) Within the range of 7.0 to 10.0 at all times.

(3) Not regulated at BAT for this process segment.

TABLE X-3

BAT LIMITATIONS* COVERING NON-CONTINUOUS DIRECT WASTEWATER DISCHARGES

Subcategory and Process Segment	Phenols(1) 30-Day Max.	Phenols(1) Daily Max.	Copper 30-Day Max.	Copper Daily Max.	Lead 30-Day Max.	Lead Daily Max.	Zinc 30-Day Max.	Zinc Daily Max.	pH
Aluminum									
Casting Cleaning	(3)	(3)	.42(12/x)	.77(12/x)	.39(12/x)	.79(12/x)	.43(12/x)	1.14(12/x)	(2)
Casting Quench	(3)	(3)	.42(1.45/x)	.77(1.45/x)	.39(1.45/x)	.79(1.45/x)	.43(1.45/x)	1.14(1.45/x)	(2)
Die Casting	.3(1.04/x)	.86(1.04/x)	.42(1.04/x)	.77(1.04/x)	.39(1.04/x)	.79(1.04/x)	.43(1.04/x)	1.14(1.04/x)	(2)
Dust Collection Scrubber	.3(.036/y)	.86(.036/y)	.42(.036/y)	.77(.036/y)	.39(.036/y)	.79(.036/y)	.43(.036/y)	1.14(.036/y)	(2)
Grinding Scrubber	No Discharge of Pollutants								
Investment Casting	(3)	(3)	.42(1320/x)	.77(1320/x)	.39(1320/x)	.79(1320/x)	.43(1320/x)	1.14(1320/x)	(2)
Melting Furnace Scrubber	.3(.468/y)	.86(.468/y)	.42(.468/y)	.77(.468/y)	.39(.468/y)	.79(.468/y)	.43(.468/y)	1.14(.468/y)	(2)
Mold Cooling	(3)	(3)	.42(46.3/x)	.77(46.3/x)	.39(46.3/x)	.79(46.3/x)	.43(46.3/x)	1.14(46.3/x)	(2)
Copper									
Casting Quench	(3)	(3)	.42(4.8/x)	.77(4.8/x)	.26(4.8/x)	.53(4.8/x)	.29(4.8/x)	.76(4.8/x)	(2)
Direct Chill Casting	(3)	(3)	.42(145/x)	.77(145/x)	.26(145/x)	.53(145/x)	.29(145/x)	.76(145/x)	(2)
Dust Collection Scrubber	.3(.086/y)	.86(.086/y)	.42(.086/y)	.77(.086/y)	.26(.086/y)	.53(.086/y)	.29(.086/y)	.76(.086/y)	(2)
Grinding Scrubber	No Discharge of Pollutants								
Investment Casting	(3)	(3)	.42(1320/x)	.77(1320/x)	.26(1320/x)	.53(1320/x)	.29(1320/x)	.76(1320/x)	(2)
Melting Furnace Scrubber	.3(.282/y)	.86(.282/y)	.42(.282/y)	.77(.282/y)	.26(.282/y)	.53(.282/y)	.29(.282/y)	.76(.282/y)	(2)
Mold Cooling	(3)	(3)	.42(61/x)	.77(61/x)	.26(61/x)	.53(61/x)	.29(61/x)	.76(61/x)	(2)

* All 30-Day Maximum and Daily Maximum limitations are in mg/l units. The annual average limitations are in units of kg/1000 kkg (lb per million lb) of metal poured except for the Wet Sand Reclamation, Dust Collection Scrubber, and Melting Furnace Scrubber process segments. In the case of the latter two process segments, the annual average limitations are in units of kg/62.3 million Sm^3 (lb per billion SCF) of air scrubbed; in the case of the former process segment, the limitations are in units of kg/1000 kkg (lb per million lb) of sand reclaimed.

(1) Total Phenols - Phenols as measured by the 4-aminoantipyrene method (4AAP)

(2) Within the range of 7.0 to 10.0 at all times.

(3) Not regulated at BAT for this process segment.

X = Actual normalized process wastewater flow (in gallons per 1,000 pounds of metal poured) for the specific plant.

Y = Actual normalized process wastewater flow (in gallons per 1,000 SCF of air scrubbed) for the specific plant.

TABLE X-3 (Continued)

BAT LIMITATIONS* COVERING NON-CONTINUOUS DIRECT WASTEWATER DISCHARGES

Subcategory and Process Segment	Phenols(1) 30-Day Max.	Phenols(1) Daily Max.	Copper 30-Day Max.	Copper Daily Max.	Lead 30-Day Max.	Lead Daily Max.	Zinc 30-Day Max.	Zinc Daily Max.	pH
Ferrous(4)									
Casting Cleaning	(3)	(3)	.16(5.35/x)	.29(5.35/x)	.26(5.35/x)	.53(5.35/x)	.37(5.35/x)	.98(5.35/x)	(2)
Casting Quench	(3)	(3)	.16(5.7/x)	.29(5.7/x)	.26(5.7/x)	.53(5.7/x)	.37(5.7/x)	.98(5.7/x)	(2)
Dust Collection Scrubber	.3(.09/y)	.86(.09/y)	.16(.09/y)	.29(.09/y)	.26(.09/y)	.53(.09/y)	.37(.09/y)	.98(.09/y)	(2)
Grinding Scrubber	No Discharge of Pollutants								
Investment Casting	(3)	(3)	.16(1320/x)	.29(1320/x)	.26(1320/x)	.53(1320/x)	.37(1320/x)	.98(1320/x)	(2)
Melting Furnace Scrubber	.3(.42/y)	.86(.42/y)	.16(.42/y)	.29(.42/y)	.26(.42/y)	.53(.42/y)	.37(.42/y)	.98(.42/y)	(2)
Mold Cooling	(3)	(3)	.16(17.7/x)	.29(17.7/x)	.26(17.7/x)	.53(17.7/x)	.37(17.7/x)	.98(17.7/x)	(2)
Slag Quench	(3)	(3)	.16(21.8/x)	.29(21.8/x)	.26(21.8/x)	.53(21.8/x)	.37(21.8/x)	.98(21.8/x)	(2)
Wet Sand Reclamation	.3(89.5/z)	.86(89.5/z)	.16(89.5/z)	.29(89.5/z)	.29(89.5/z)	.53(89.5/z)	.37(89.5/z)	.98(89.5/z)	(2)

* All 30-Day Maximum and Daily Maximum limitations are in mg/l units. The annual average limitations are in units of kg/1000 kkg (lb per million lb) of metal poured except for the Wet Sand Reclamation, Dust Collection Scrubber, and Melting Furnace Scrubber process segments. In the case of the latter two process segments, the annual average limitations are in units of kg/62/3 million Sm^3 (lb per billion SCF) of air scrubbed; in the case of the former process segment, the limitations are in units of kg/1000 kkg (lb per million lb) of sand reclaimed.

(1) Total Phenols - Phenols as measured by the 4-aminoantipyrene method (4AAP).

(2) Within the range of 7.0 to 10.0 at all times.

(3) Not regulated at BAT for this process segment.

(4) Applicable to plants that cast primarily malleable iron where greater than 3,557 tons of metal are poured per year and to plants that cast primarily ductile or gray iron.

X = Actual normalized process wastewater flow (in gallons per 1,000 pounds of metal poured) for the specific plant.

Y = Actual normalized process wastewater flow (in gallons per 1,000 SCF of air scrubbed) for the specific plant.

Z = Actual normalized process wastewater flow (in gallons per 1,000 of sand reclaimed) for the specific plant.

TABLE X-3 (Continued)

BAT LIMITATIONS* COVERING NON-CONTINUOUS DIRECT WASTEWATER DISCHARGES

Subcategory and Process Segment	Phenols(1) 30-Day Max.	Phenols(1) Daily Max.	Copper 30-Day Max.	Copper Daily Max.	Lead 30-Day Max.	Lead Daily Max.	Zinc 30-Day Max.	Zinc Daily Max.	pH
Ferrous(5)									
Casting Cleaning	(3)	(3)	.16(5.35/x)	.29(5.35/x)	.39(5.35/x)	.79(5.35/x)	.56(5.35/x)	1.47(5.35/x)	(2)
Casting Quench	(3)	(3)	.16(5.7/x)	.29(5.7/x)	.39(5.7/x)	.79(5.7/x)	.56(5.7/x)	1.47(5.7/x)	(2)
Dust Collection Scrubber	.3(.09/y)	.86(.09/y)	.16(.09/y)	.29(.09/y)	.39(.09/y)	.79(.09/y)	.56(.09/y)	1.47(.09/y)	(2)
Grinding Scrubber	No Discharge of Pollutants								
Investment Casting	(3)	(3)	.16(1320/x)	.29(1320/x)	.39(1320/x)	.79(1320/x)	.56(1320/x)	1.47(1320/x)	(2)
Melting Furnace Scrubber	.3(.42/y)	.86(.42/y)	.16(.42/y)	.29(.42/y)	.39(.42/y)	.79(.42/y)	.56(.42/y)	1.47(.42/y)	(2)
Mold Cooling	(3)	(3)	.16(17.7/x)	.29(17.7/x)	.39(17.7/x)	.79(17.7/x)	.56(17.7/x)	1.47(17.7/x)	(2)
Slag Quench	(3)	(3)	.16(21.8/x)	.29(21.8/x)	.39(21.8/x)	.79(21.8/x)	.56(21.8/x)	1.47(21.8/x)	(2)
Wet Sand Reclamation	.3(89.5/z)	.86(89.5/z)	.16(89.5/z)	.29(89.5/z)	.39(89.5/z)	.79(89.5/z)	.56(89.5/z)	1.47(89.5/z)	(2)
Zinc									
Casting Quench	(3)	(3)	.42(5.35/x)	.77(5.35/x)	.26(5.35/x)	.53(5.35/x)	.29(5.35/x)	.76(5.35/x)	(2)
Die Casting	.3(1.04/x)	.86(1.04/x)	.42(1.04/x)	.77(1.04/x)	.26(1.04/x)	.53(1.04/x)	.29(1.04/x)	.76(1.04/x)	(2)
Melting Furnace Scrubber	.3(.243/y)	.86(.243/y)	.42(.243/y)	.77(.243/y)	.26(.243/y)	.53(.243/y)	.29(.243/y)	.76(.243/y)	(2)
Mold Cooling	(3)	(3)	.42(47.3/x)	.77(47.3/x)	.26(47.3/x)	.53(47.3/x)	.29(47.3/x)	.76(47.3/x)	(2)

* All 30-Day Maximum and Daily Maximum limitations are in mg/l units. The annual average limitations are in units of kg/1000 kkg (lb per million lb) of metal poured except for the Wet Sand Reclamation, Dust Collection Scrubber, and Melting Furnace Scrubber process segments. In the case of the latter two process segments, the annual average limitations are in units of kg/62.3 million Sm^3 (lb per billion SCF) of air scrubbed; in the case of the former process segment, the limitations are in units of kg/1000 kkg (lb per million lb) of sand reclaimed.

(1) Total Phenols - Phenols as measured by the 4-aminoantipyrene method (4AAP).

(2) Within the range of 7.0 to 10.0 at all times.

(3) Not regulated at BAT for this process segment.

(5) Applicable to plants that cast primarily malleable iron where equal to or less than 3,557 tons of metal are poured per year and to plants that cast primarily steel.

X = Actual normalized process wastewater flow (in gallons per 1,000 pounds of metal poured) for the specific plant.

Y = Actual normalized process wastewater flow (in gallons per 1,000 SCF of air scrubbed) for the specific plant.

Z = Actual normalized process wastewater flow (in gallons per 1,000 of sand reclaimed) for the specific plant.

SECTION XI

BEST CONVENTIONAL POLLUTANT CONTROL TECHNOLOGY

The 1977 Amendments added Section 301(b)(2)(E) to the Act establishing the "best conventional pollutant control technology" (BCT) for discharges of conventional pollutants from existing industrial point sources. Conventional pollutants are those defined in Section 304(a)(4) [biological oxygen demanding pollutants (e.g., BOD_5), total suspended solids (TSS), fecal coliform, and pH], and any additional pollutants defined by the Administrator as "conventional" (oil and grease, 44 FR 44501, July 30, 1979).

BCT is not an additional limitation but replaces BAT for the control of conventional pollutants. In addition to other factors specified in Section 304(b)(4)(B), the Act requires that BCT limitations be assessed in light of a two part "cost-reasonableness" test. American Paper Institute v. EPA, 660 F.2d 954 (4th Cir. 1981). The first test compares the cost for private industry to reduce its conventional pollutants with the costs to publicly owned treatment works for similar levels of reduction in their discharge of these pollutants. The second test examines the cost-effectiveness of additional industrial treatment beyond BPT. EPA must find that limitations are "reasonable" under both tests before establishing them as BCT. In no case may BCT be less stringent than BPT.

EPA has determined that the treatment alternatives considered in this rulemaking that are more stringent than the best practicable control technology currently available are capable of removing significant amounts of conventional pollutants. Therefore, EPA is deferring establishing BCT limitations for this category until a BCT methodology has been promulgated.

SECTION XII

NEW SOURCE PERFORMANCE STANDARDS

INTRODUCTION

The basis for new source performance standards (NSPS) under Section 306 of the Clean Water Act is the best available demonstrated technology (BDT). New plants have the opportunity to design the best and most efficient production processes and wastewater treatment technologies. Therefore, NSPS includes process changes, in-plant controls (including elimination of wastewater streams), operating procedure changes, and end-of-pipe treatment technologies to reduce pollution to the maximum extent possible.

This section describes the control technology for treatment of wastewater from new sources and discusses mass discharge standards for regulated pollutants, based on the described control technologies.

TECHNICAL APPROACH TO ESTABLISHING NSPS

The Agency considered four technology options which might be applied as the best available demonstrated technology. These options are identical to those considered for BAT and are described in detail in Section VII. The options are summarized below:

Option 2: Recycle, lime and settle.
Option 3: Recycle, lime and settle, filtration.
Option 4: Recycle, lime and settle, filtration, activated carbon adsorption.
Option 5: Complete recycle, no discharge (grinding scrubber process segments only).

The data relied upon for selection of NSPS were the data developed for the evaluation of treatment Options 2 through 5 for existing sources. It is likely that compliance costs would be lower for new sources than for equivalent existing sources. Production processes can be designed at new sources on the basis of lower flows and there will be no costs associated with retrofitting the in-process controls. Therefore, new sources, regardless of whether they are existing plants with major modifications or greenfield sites, will have costs that are not greater than the costs that existing sources would incur in achieving equivalent pollutant discharge reductions. On this basis, the Agency believes that the final NSPS are appropriate for both greenfield sites and existing sites undergoing major modifications.

NSPS TECHNOLOGY OPTION SELECTION

For the reasons explained in Section X, EPA has promulgated NSPS for all regulated subcategories on the basis of the same technologies as for BAT. New sources in the magnesium subcategory are not regulated by NSPS because the costs of compliance with standards based on the treatment technologies identified in this rulemaking, which would have resulted in closure for one of two existing sources, are likely to serve as barriers to entry into magnesium casting.

NSPS are based on Option 5 (complete recycle with no discharge) for the grinding scrubber process segments of the aluminum, copper, and ferrous casting subcategories. For the remaining process segments: (a) NSPS are based on Option 3 (recycle, lime and settle, filtration) for the copper and zinc subcategories and for the major portions of the ferrous subcategory (all plants except those that cast primarily steel or that pour less than 3,557 tons of metal per year and cast primarily malleable iron); (b) NSPS are based on Option 2 (recycle, lime and settle) for the aluminum subcategory as well as for plants in the ferrous subcategory that cast primarily steel or that cast primarily malleable iron and pour less than 3,557 tons of metal per year.

Regulations based on the selected technology options will not preclude the entry of new plants into the industry.

REGULATED POLLUTANT PARAMETERS

EPA has established NSPS controlling all toxic, nonconventional, and conventional pollutants regulated at BPT and BAT. These are: copper, lead, zinc, total phenols, oil and grease, suspended solids (TSS), and pH. For the reasons explained in Section X, EPA is not establishing NSPS controlling toxic organic compounds. EPA has determined that compliance with the oil and grease standards will ensure effective control of toxic organic compounds discharged from plants in the metal molding and casting industry.

NSPS FLOW

EPA established the flow bases of BPT/BAT at the lowest flow rates that the Agency believed were generally achievable for each subcategory segment (see Sections IX and X). Thus, the flow bases of BPT/BAT also represent the best available demonstrated flow rates for the metal molding and casting point source category. Table XII-1 presents the NSPS normalized flow for each process segment.

NSPS EFFLUENT STANDARDS

The NSPS mass effluent standards (mass of pollutant allowed to be discharged per mass of metal poured, mass of sand reclaimed, or volume of wet scrubber air flow) are presented in Table XII-2. These limitations were calculated for each regulated pollutant in

each process segment as follows: the NSPS normalized flow for each discharge segment (see Table XII-1) was multiplied by the one-day maximum and by the maximum monthly average treatment effectiveness concentrations (see Tables VII-12 and VII-14) corresponding to the NSPS technology option selected for each subcategory. As explained in Section VII, the maximum monthly average treatment effectiveness concentration is based on the average of 10 samples over the period of a month.

The NSPS effluent standards presented at proposal assumed that discharges from metal molding and casting plants would always be on a continuous basis. Information submitted in comments and confirmed by EPA indicate that treatment may be done on a batch basis with discharge on an intermittent basis.

To allow this practice to continue where plants find batch treatment to be an effective control technique, the final regulations contain provisions that would allow metal molding and casting plants to discharge on an intermittent basis provided that they comply with annual average NSPS effluent standards that are equivalent to the NSPS effluent standards applicable to continuous discharging plants. Plants are eligible for the annual average limitations and standards where wastewaters are stored for periods in excess of 24 hours to be treated on a batch basis. NPDES permits established for these "noncontinuous" discharging plants must also contain concentration-based maximum day and maximum for monthly average standards as shown in Table XII-3.

COST OF APPLICATION AND EFFLUENT REDUCTIONS BENEFITS

EPA anticipates that new metal molding and casting plants subject to NSPS that use wet scrubbing devices will remove toxic metal, toxic organic, and nonconventional pollutants at approximately the same rates as will be removed by existing sources subject to the BAT effluent limitations guidelines. On a per-plant basis, conventional pollutant removals at new sources are expected to be comparable to conventional pollutant removals at existing sources complying with the BPT effluent limitations guidelines, except that, where NSPS are based on Option 3, suspended solids removals will be somewhat greater than at BPT. Costs for new sources employing wet scrubbers are also expected to be comparable to those incurred by existing sources, although some piping and retrofit costs (e.g., stream segregation) will not be incurred by new source direct discharging plants. If dry scrubbers are used, both costs and pollutant removals will be reduced considerably.

NON-WATER QUALITY ASPECTS OF NSPS

Because NSPS have been established on the basis of the same control and treatment technologies as BPT and BAT, compliance with NSPS will not cause any incremental air pollution or solid waste generation, water consumption, or energy usage compared to compliance with the BPT and BAT effluent limitations guidelines.

Table XII-1

APPLIED FLOW RATES, RECYCLE RATES, AND DISCHARGE RATES THAT FORM THE BASIS OF NSPS

Subcategory/Process Segment	Production Normalized Applied Flow Rate	Production Normalizing Parameter	Recycle Rate	Production Normalized Discharge Flow*
Aluminum				
Casting Cleaning	480 gal/ton	ton of metal poured	95%	24.0 gal/ton
Casting Quench	145 gal/ton	ton of metal poured	98%	2.90 gal/ton
Die Casting	41.4 gal/ton	ton of metal poured	95%	2.07 gal/ton
Dust Collection Scrubber	1.78 gal/1,000 SCF	1,000 SCF of air flow through the scrubber	98%	0.036 gal/1,000 SCF
Grinding Scrubber	0.063 gal/1,000 SCF	1,000 SCF of air flow through the scrubber	100%	0
Investment Casting	17,600 gal/ton	ton of metal poured	85%	2,640 gal/ton
Melting Furnace Scrubber	11.7 gal/1,000 SCF	1,000 SCF of air flow through the scrubber	96%	0.468 gal/1,000 SCF
Mold Cooling	1,850 gal/ton	ton of metal poured	95%	92.5 gal/ton
Copper				
Casting Quench	478 gal/ton	ton of metal poured	98%	9.56 gal/ton
Direct Chill Casting	5,780 gal/ton	ton of metal poured	95%	289 gal/ton
Dust Collection Scrubber	4.29 gal/1,000 SCF	1,000 SCF of air flow through the scrubber	98%	0.086 gal/1,000 SCF
Grinding Scrubber	0.111 gal/1,000 SCF	1,000 SCF of air flow through the scrubber	100%	0
Investment Casting	17,600 gal/ton	ton of metal poured	85%	2,640 gal/ton
Melting Furnace Scrubber	7.04 gal/1,000 SCF	1,000 SCF of air flow through the scrubber	96%	0.282 gal/1,000 SCF
Mold Cooling	2,450 gal/ton	ton of metal poured	95%	122 gal/ton
Ferrous				
Casting Cleaning	213 gal/ton	ton of metal poured	95%	10.7 gal/ton
Casting Quench	571 gal/ton	ton of metal poured	98%	11.4 gal/ton
Dust Collection Scrubber	3.0 gal/1,000 SCF	1,000 SCF of air flow through the scrubber	97%	0.090 gal/1,000 SCF
Grinding Scrubber	3.17 gal/1,000 SCF	1,000 SCF of air flow through the scrubber	100%	0
Investment Casting	17,600 gal/ton	ton of metal poured	85%	2,640 gal/ton
Melting Furnace Scrubber	10.5 gal/1,000 SCF	1,000 SCF of air flow through the scrubber	96%	0.420 gal/1,000 SCF

Table XII-1 (Continued)

APPLIED FLOW RATES, RECYCLE RATES, AND DISCHARGE RATES THAT FORM THE BASIS OF NSPS

Subcategory/Process Segment	Production Normalized Applied Flow Rate	Production Normalizing Parameter	Recycle Rate	Production Normalized Discharge Flow*
Ferrous (Cont.)				
Mold Cooling	707 gal/ton	ton of metal poured	95%	35.4 gal/ton
Slag Quench	727 gal/ton	ton of metal poured	94%	43.6 gal/ton
Wet Sand Reclamation	895 gal/ton	ton of sand reclaimed	80%	179 gal/ton
Zinc				
Casting Quench	533 gal/ton	ton of metal poured	98%	10.7 gal/ton
Die Casting	41.4 gal/ton	ton of metal poured	95%	2.07 gal/ton
Melting Furnace Scrubber	6.07 gal/1,000 SCF	1,000 SCF of air flow through the scrubber	96%	0.243 gal/1,000 SCF
Mold Cooling	1,890 gal/ton	ton of metal poured	95%	94.5 gal/ton

*Flow basis for mass limitations.

TABLE XII-2

NSPS LIMITATIONS* COVERING CONTINUOUS DIRECT DISCHARGES

Subcategory and Process Segment	TSS 30-Day Max.	TSS Daily Max.	Oil & Grease 30-Day Max.	Oil & Grease Daily Max.	Phenols(1) 30-Day Max.	Phenols(1) Daily Max.	Copper 30-Day Max.	Copper Daily Max.	Lead 30-Day Max.	Lead Daily Max.	Zinc 3D-Day Max.	Zinc Daily Max.	pH
Aluminum													
Casting Cleaning	1.50	3.80	1.0	3.0	(3)	(3)	.0421	.0771	.039	.0791	.0431	.114	(2)
Casting Quench	.182	.46	.121	.363	(3)	(3)	.0051	.0093	.0047	.0096	.0052	.0138	(2)
Die Casting	.13	.33	.0864	.259	.0026	.0074	.0036	.0066	.0034	.0068	.0037	.0098	(2)
Dust Collection Scrubber	4.51	11.4	3.0	9.01	.09	.258	.126	.231	.117	.237	.129	.343	(2)
Grinding Scrubber	No Discharge of Pollutants												
Investment Casting	165	419	110	330	(3)	(3)	4.63	8.48	4.3	8.7	4.74	12.6	(2)
Melting Furnace Scrubber	58.6	148	39.1	117	1.17	3.36	1.64	3.01	1.52	3.09	1.68	4.45	(2)
Mold Cooling	5.79	14.7	3.86	11.6	(3)	(3)	.162	.297	.151	.305	.166	.44	(2)
Copper													
Casting Quench	.479	.598	.399	1.2	(3)	(3)	.0168	.0307	.0104	.0211	.0116	.0303	(2)
Direct Chill Casting	14.5	18.1	12.1	36.2	(3)	(3)	.506	.928	.314	.639	.35	.916	(2)
Dust Collection Scrubber	8.61	10.8	7.18	21.5	.215	.617	.301	.553	.187	.38	.208	.545	(2)
Grinding Scrubber	No Discharge of Pollutants												
Investment Casting	132	165	110	330	(3)	(3)	4.63	8.48	2.86	5.84	3.19	8.37	(2)
Melting Furnace Scrubber	28.2	35.3	23.5	70.6	.706	2.02	.988	1.81	.612	1.25	.673	1.79	(2)
Mold Cooling	6.11	7.63	5.09	15.3	(3)	(3)	.214	.392	.132	.27	.148	.387	(2)

* All limitations are in units of kg/1000 kkg (lb per million lb) of metal poured except for the Wet Sand Reclamation, Dust Collection Scrubber, and Melting Furnace Scrubber process segments. In the case of the latter two process segments, the limitations are in units of kg/62.3 million Sm^3 (lb per billion SCF) of air scrubbed; in the case of the former process segment, the limitations are in units of kg/1000 kkg (lb per million lb) of sand reclaimed.

(1) Total Phenols - Phenols as measured by the 4-aminoantipyrene method (4AAP)

(2) Within the range of 7.0 to 10.0 at all times.

(3) Not regulated at NSPS for this process segment.

TABLE XII-2 (Continued)

NSPS LIMITATIONS* COVERING CONTINUOUS DIRECT DISCHARGES

Subcategory and Process Segment	TSS 30-Day Max.	TSS Daily Max.	Oil & Grease 30-Day Max.	Oil & Grease Daily Max.	Phenols(1) 30-Day Max.	Phenols(1) Daily Max.	Copper 30-Day Max.	Copper Daily Max.	Lead 30-Day Max.	Lead Daily Max.	Zinc 30-Day Max.	Zinc Daily Max.	pH
Ferrous(4)													
Casting Cleaning	.536	.67	.446	1.34	(3)	(3)	.0071	.0129	.0116	.D237	.0165	.0437	(2)
Casting Quench	.571	.713	.476	1.43	(3)	(3)	.D076	.0138	.0124	.0252	.0176	.0466	(2)
Dust Collection Scruhber	9.01	11.3	7.51	22.5	.225	.646	.12	.218	.195	.398	.278	.736	(2)
Grinding Scruhber	----------No Discharge of Pollutants----------												
Investment Casting	132	165	110	330	(3)	(3)	1.76	3.19	2.86	5.84	4.07	10.8	(2)
Melting Furnace Scrubber	42.1	52.6	35	105	1.05	3.01	.561	1.02	.911	1.86	1.3	3.44	(2)
Mold Cooling	1.77	2.22	1.48	4.43	(3)	(3)	.0236	.0428	.0384	.0783	.0546	.145	(2)
Slag Quench	2.18	2.73	1.82	5.46	(3)	(3)	.0291	.0527	.D473	.0964	.0673	.178	(2)
Wet Sand Reclamation	8.96	11.2	7.47	22.4	.224	.642	.12	.217	.194	.396	.276	.752	(2)

* All limitations are in units of kg/1000 kkg (lh per million lh) of metal poured except for the Wet Sand Reclamation, Dust Collection Scrubber, and Melting Furnace Scrubber process segments. In the case of the latter two process segments, the limitations are in units of kg/62.3 Sm^3 (lb per billion SCF) of air scrubbed; in the case of the former process segment, the limitations are in units of kg/1000 kkg (lb per million lb) of sand reclaimed.

(1) Total Phenols - Phenols as measured by the 4-aminoantipyrene method (4AAP)

(2) Within the range of 7.0 to 10.0 at all times.

(3) Not regulated at NSPS for this process segment

(4) Applicable to plants that cast primarily malleable iron where greater than 3,557 tons of metal are poured per year and to plants that cast primarily ductile or gray iron.

TABLE XII-2 (Continued)

NSPS LIMITATIONS* COVERING CONTINUOUS DIRECT DISCHARGES

Subcategory and Process Segment	TSS 30-Day Max.	TSS Daily Max.	Oil & Grease 30-Day Max.	Oil & Grease Daily Max.	Phenols(1) 30-Day Max.	Phenols(1) Daily Max.	Copper 30-Day Max.	Copper Daily Max.	Lead 30-Day Max.	Lead Daily Max.	Zinc 30-Day Max.	Zinc Daily Max.	pH
Ferrous(5)													
Casting Cleaning	.67	1.7	.446	1.34	(3)	(3)	.0071	.0129	.0174	.0353	.025	.0656	(2)
Casting Quench	.713	1.81	.476	1.43	(3)	(3)	.0076	.0138	.0185	.0376	.0266	.0699	(2)
Dust Collection Scrubber	11.3	28.5	7.51	22.5	.225	.656	.12	.218	.293	.593	.421	1.1	(2)
Grinding Scrubber	No Discharge of Pollutants												
Investment Casting	165	419	110	330	(3)	(3)	1.76	3.19	4.3	8.7	6.17	16.2	(2)
Melting Furnace Scrubber	52.6	133	35	105	1.05	3.01	.561	1.02	1.37	2.77	1.96	5.15	(2)
Mold Cooling	2.22	5.61	1.48	4.43	(3)	(3)	.0236	.0428	.0576	.117	.0827	.217	(2)
Slag Quench	2.73	6.91	1.82	5.46	(3)	(3)	.0291	.0527	.0709	.144	.102	.267	(2)
Wet Sand Reclamation	11.2	28.4	7.47	22.4	.224	.642	.12	.217	.291	.59	.418	1.1	(2)
Zinc													
Casting Quench	.536	.67	.446	1.34	(3)	(3)	.0187	.0344	.0116	.0237	.0129	.0339	(2)
Die Casting	.104	.13	.0864	.259	.0026	.0074	.0036	.0066	.0022	.0046	.0025	.0066	(2)
Melting Furnace Scrubber	24.3	30.4	20.3	60.8	.608	1.74	.852	1.56	.527	1.07	.588	1.54	(2)
Mold Cooling	4.73	5.91	3.94	11.8	(3)	(3)	.166	.304	.103	.209	.114	.3	(2)

* All limitations are in units of kg/1000 kkg (lb per million lb) of metal poured except for the Wet Sand Reclamation, Dust Collection Scrubber, and Melting Furnace Scrubber process segments. In the case of the latter two process segments, the limitations are in units of kg/62.3 million Sm^3 (lb per billion SCF) of air scrubbed; in the case of the former process segment, the limitations are in units of kg/1000 kkg (lb per million lb) of sand reclaimed.

(1) Total Phenols - Phenols as measured by the 4-aminoantipyrene method (4AAP)

(2) Within the range of 7.0 to 10.0 at all times

(3) Not regulated at NSPS for this process segment

(5) Applicable to plants that cast primarily malleable iron where equal to or less than 3,557 tons of metal are poured per year and to plants that cast primarily steel.

TABLE XII-3

NSPS LIMITATIONS* COVERING NON-CONTINUOUS DIRECT WASTEWATER DISCHARGES

Subcategory and Process Segment	TSS 30-Day Max.	TSS Daily Max.	Oil & Grease 30-Day Max.	Oil & Grease Daily Max.	Phenols(1) 30-Day Max.	Phenols(1) Daily Max.
Aluminum						
Casting Cleaning	15(12/x)	38(12/x)	10(12/x)	30(12/x)	(3)	(3)
Casting Quench	15(1.45/x)	38(1.45/x)	10(1.45/x)	30(1.45/x)	(3)	(3)
Die Casting	15(1.04/x)	38(1.04/x)	10(1.04/x)	30(1.04/x)	0.3(1.04/x)	.86(1.04/x)
Dust Collection Scrubber	15(.036/y)	38(.036/y)	10(.036/y)	30(.036/y)	0.3(.036/y)	.86(.036/y)
Grinding Scrubber	----------No Discharge of Pollutants----------					
Investment Casting	15(1320/x)	38(1320/x)	10(1320/x)	30(1320/x)	(3)	(3)
Melting Furnace Scrubber	15(.468/y)	38(.468/y)	10(.468/y)	30(.468/y)	0.3(.468/y)	.86(.468/y)
Mold Cooling	15(46.3/x)	38(46.3/x)	10(46.3/x)	30(46.3/x)	(3)	(3)
Copper						
Casting Quench	12(4.8/x)	15(4.8/x)	10(4.8/x)	30(4.8/x)	(3)	(3)
Direct Chill Casting	12(145/x)	15(145/x)	10(145/x)	30(145/x)	(3)	(3)
Dust Collection Scrubber	12(.086/y)	15(.086/y)	10(.086/y)	30(.086/y)	0.3(.086/y)	.86(.086/y)
Grinding Scrubber	----------No Discharge of Pollutants----------					
Investment Casting	12(1320/x)	15(1320/x)	10(1320/x)	30(1320/x)	(3)	(3)
Melting Furnace Scrubber	12(.282/y)	15(.282/y)	10(.282/y)	30(.282/y)	0.3(.282/y)	.86(.282/y)
Mold Cooling	12(61/x)	15(61/x)	10(61/x)	30(61/x)	(3)	(3)

* All 30-Day Maximum and Daily Maximum limitations are in mg/l units. The annual average limitations are in units of kg/1000 kkg (lb per million lb) of metal poured except for the Wet Sand Reclamation, Dust Collection Scrubber, and Melting Furnace Scrubber process segments. In the case of the latter two process segments, the annual average limitations are in units of kg/62.3 million Sm^3 (lb per billion SCF) of air scrubbed; in the case of the former process segment, the limitations are in units of kg/1000 kkg (lb per million lb) of sand reclaimed.

(1) Total Phenols - Phenols as measured by the 4-aminoantipyrene method (4AAP).

(2) Within the range of 7.0 to 10.0 at all times.

(3) Not regulated at NSPS for this process segment.

X = Actual normalized process wastewater flow (in gallons per 1,000 pounds of metal poured) for the specific plant.

Y = Actual normalized process wastewater flow (in gallons per 1,000 SCF of air scrubbed) for the specific plant.

TABLE XII-3 (Continued)

NSPS LIMITATIONS* COVERING NON-CONTINUOUS DIRECT WASTEWATER DISCHARGES

Subcategory and Process Segment	Copper 30-Day Max.	Copper Daily Max.	Lead 30-Day Max.	Lead Daily Max.	Zinc 30-Day Max.	Zinc Daily Max.	pH
Aluminum							
Casting Cleaning	.42(12/x)	.77(12/x)	.39(12/x)	.79(12/x)	.43(12/x)	1.14(12/x)	(2)
Casting Quench	.42(1.45/x)	.77(1.45/x)	.39(1.45/x)	.79(1.45/x)	.43(1.45/x)	1.14(1.45/x)	(2)
Die Casting	.42(1.04/x)	.77(1.04/x)	.39(1.04/x)	.79(1.04/x)	.43(1.04/x)	1.14(1.04/x)	(2)
Dust Collection Scrubber	.42(.036/y)	.77(.036/y)	.39(.036/y)	.79(.036/y)	.43(.036/y)	1.14(.036/y)	(2)
Grinding Scrubber	No Discharge of Pollutants						
Investment Casting	.42(1320/x)	.77(1320/x)	.39(1320/x)	.79(1320/x)	.43(1320/x)	1.14(1320/x)	(2)
Melting Furnace Scrubber	.42(.468/y)	.77(.468/y)	.39(.468/y)	.79(.468/y)	.43(.468/y)	1.14(.468/y)	(2)
Mold Cooling	.42(46.3/x)	.77(46.3/x)	.39(46.3/x)	.79(46.3/x)	.43(46.3/x)	1.14(46.3/x)	(2)
Copper							
Casting Quench	.42(4.8/x)	.77(4.8/x)	.26(4.8/x)	.53(4.8/x)	.29(4.8/x)	.76(4.8/x)	(2)
Direct Chill Casting	.42(145/x)	.77(145/x)	.26(145/x)	.53(145/x)	.29(145/x)	.76(145/x)	(2)
Dust Collection Scrubber	.42(.086/y)	.77(.086/y)	.26(.086/y)	.53(.086/y)	.29(.086/y)	.76(.086/y)	(2)
Grinding Scrubber	No Discharge of Pollutants						
Investment Casting	.42(1320/x)	.77(1320/x)	.26(1320/x)	.53(1320/x)	.29(1320/x)	.76(1320/x)	(2)
Melting Furnace Scrubber	.42(.282/y)	.77(.282/y)	.26(.282/y)	.53(.282/y)	.29(.282/y)	.76(.282/y)	(2)
Mold Cooling	.42(61/x)	.77(61/x)	.26(61/x)	.53(61/x)	.29(61/x)	.76(61/x)	(2)

* All 30-Day Maximum and Daily Maximum limitations are in mg/l units. The annual average limitations are in units of kg/1000 kkg (lb per million lb) of metal poured except for the Wet Sand Reclamation, Dust Collection Scrubber, and Melting Furnace Scrubber process segments. In the case of the latter two process segments, the annual average limitations are in units of kg/62.3 million Sm^3 (lb per billion SCF) of air scrubbed; in the case of the former process segment, the limitations are in units of kg/1000 kkg (lb per million lb) of sand reclaimed.

(1) Total Phenols - Phenols as measured by the 4-aminoantipyrene method (4AAP).

(2) Within the range of 7.0 to 10.0 at all times.

(3) Not regulated at NSPS for this process segment.

X = Actual normalized process wastewater flow (in gallons per 1,000 pounds of metal poured) for the specific plant.

Y = Actual normalized process wastewater flow (in gallons per 1,000 SCF of air scrubbed) for the specific plant.

TABLE XII-3 (Continued)

NSPS LIMITATIONS* COVERING NON-CONTINUOUS DIRECT WASTEWATER DISCHARGES

Subcategory and Process Segment	TSS 30-Day Max.	TSS Daily Max.	Oil & Grease 30-Day Max.	Oil & Grease Daily Max.	Phenols(1) 30-Day Max.	Phenols(1) Daily Max.
Ferrous(4)						
Casting Cleaning	12(5.35/x)	15(5.35/x)	10(5.35/x)	30(5.35/x)	(3)	(3)
Casting Quench	12(5.7/x)	15(5.7/x)	10(5.7/x)	30(5.7/x)	(3)	(3)
Dust Collection Scrubber	12(.09/y)	15(.09/y)	10(.09/y)	30(.09/y)	.3(.09/y)	.86(.09/y)
Grinding Scrubber	----------No Discharge of Pollutants----------					
Investment Casting	12(1320/x)	15(1320/x)	10(1320/x)	30(1320/x)	(3)	(3)
Melting Furnace Scrubber	12(.42/y)	15(.42/y)	10(.42/y)	30(.42/y)	.3(.42/y)	.86(.42/y)
Mold Cooling	12(17.7/x)	15(17.7/x)	10(17.7/x)	30(17.7/x)	(3)	(3)
Slag Quench	12(21.8/x)	15(21.8/x)	10(21.8/x)	30(21.8/x)	(3)	(3)
Wet Sand Reclamation	12(89.5/z)	15(89.5/z)	10(89.5/z)	30(89.5/z)	.3(89.5/z)	.86(89.5/z)

* All 30-Day Maximum and Daily Maximum limitations are in mg/l units. The annual average limitations are in units of kg/1000 kkg (lb per million lb) of metal poured except for the Wet Sand Reclamation, Dust Collection Scrubber, and Melting Furnace Scrubber process segments. In the case of the latter two process segments, the annual average limitations are in units of kg/62.3 million Sm^3 (lb per billion SCF) of air scrubbed; in the case of the former process segment, the limitations are in units of kg/1000 kkg (lb per million lb) of sand reclaimed.

(1) Total Phenols - Phenols as measured by the 4-aminoantipyrene method (4AAP).

(2) Within the range of 7.0 to 10.0 at all times.

(3) Not regulated at NSPS for this segment.

(4) Applicable to plants that cast primarily malleable iron where greater than 3,557 tons of metal are poured per year and to plants that cast primarily ductile or gray iron.

X = Actual normalized process wastewater flow (in gallons per 1,000 pounds of metal poured) for the specific plant.

Y = Actual normalized process wastewater flow (in gallons per 1,000 SCF of air scrubbed) for the specific plant.

Z = Actual normalized process wastewater flow (in gallons per 1,000 pounds of sand reclaimed) for the specific plant.

TABLE XII-3 (Continued)

NSPS LIMITATIONS* COVERING NON-CONTINUOUS DIRECT WASTEWATER DISCHARGES

Subcategory and Process Segment	Copper 30-Day Max.	Copper Daily Max.	Lead 30-Day Max.	Lead Daily Max.	Zinc 30-Day Max.	Zinc Daily Max.	pH
Ferrous(4)							
Casting Cleaning	.16(5.35/x)	.29(5.35/x)	.26(5.35/x)	.53(5.35/x)	.37(5.35/x)	.98(5.35/x)	(2)
Casting Quench	.16(5.7/x)	.29(5.7/x)	.26(5.7/x)	.53(5.7/x)	.37(5.7/x)	.98(5.7/x)	(2)
Dust Collection Scrubber	.16(.09/y)	.29(.09/y)	.26(.09/y)	.53(.09/y)	.37(.09/y)	.98(.09/y)	(2)
Grinding Scrubber	No Discharge of Pollutants						
Investment Casting	.16(1320/x)	.29(1320/x)	.26(1320/x)	.53(1320/x)	.37(1320/x)	.98(1320/x)	(2)
Melting Furnace Scrubber	.16(.42/y)	.29(.42/y)	.26(.42/y)	.53(.42/y)	.37(.42/y)	.98(.42/y)	(2)
Mold Cooling	.16(17.7/x)	.29(17.7/x)	.26(17.7/x)	.53(17.7/x)	.37(17.7/x)	.98(17.7/x)	(2)
Slag Quench	.16(21.8/x)	.29(21.8/x)	.26(21.8/x)	.53(21.8/x)	.37(21.8/x)	.98(21.8/x)	(2)
Wet Sand Reclamation	.16(89.5/z)	.29(89.5/z)	.26(89.5/z)	.53(89.5/z)	.37(89.5/z)	.98(89.5/z)	(2)

* All 30-Day Maximum and Daily Maximum limitations are in mg/l units. The annual average limitations are in units of kg/1000 kkg (lb per million lb) of metal poured except for the Wet Sand Reclamation, Dust Collection Scrubber, and Melting Furnace Scrubber process segments. In the case of the latter two process segments, the annual average limitations are in units of kg/62.3 million Sm^3 (lb per billion SCF) of air scrubbed; in the case of the former process segment, the limitations are in units of kg/1000 kkg (lb per million lb) of sand reclaimed.

(1) Total Phenols - Phenols as measured by the 4-aminoantipyrene method (4AAP).

(2) Within the range of 7.0 to 10.0 at all times.

(3) Not regulated at NSPS for this segment.

(4) Applicable to plants that cast primarily malleable iron where greater than 3,557 tons of metal are poured per year and to plants that cast primarily ductile or gray iron.

X = Actual normalized process wastewater flow (in gallons per 1,000 pounds of metal poured) for the specific plant.

Y = Actual normalized process wastewater flow (in gallons per 1,000 SCF of air scrubbed) for the specific plant.

Z = Actual normalized process wastewater flow (in gallons per 1,000 pounds of sand reclaimed) for the specific plant.

TABLE XII-3 (Continued)

NSPS LIMITATIONS* COVERING NON-CONTINUOUS DIRECT WASTEWATER DISCHARGES

Subcategory and Process Segment	TSS 30-Day Max.	TSS Daily Max.	Oil & Grease 30-Day Max.	Oil & Grease Daily Max.	Phenols(1) 30-Day Max.	Phenols(1) Daily Max.
Ferrous(5)						
Casting Cleaning	15(5.35/x)	38(5.35/x)	10(5.35/x)	30(5.35/x)	(3)	(3)
Casting Quench	15(5.7/x)	38(5.7/x)	10(5.7/x)	30(5.7/x)	(3)	(3)
Dust Collection Scrubber	15(.09/y)	38(.09/y)	10(.09/y)	30(.09/y)	.3(.09/y)	.86(.09/y)
Grinding Scrubber	----------No Discharge of Pollutants----------					
Investment Casting	15(1320/x)	38(1320/x)	10(1320/x)	30(1320/x)	(3)	(3)
Melting Furnace Scrubber	15(.42/y)	38(.42/y)	10(.42/y)	30(.42/y)	.3(.42/y)	.86(.42/y)
Mold Cooling	15(17.7/x)	38(17.7/x)	10(17.7/x)	30(17.7/x)	(3)	(3)
Slag Quench	15(21.8/x)	38(21.8/x)	10(21.8/x)	30(21.8/x)	(3)	(3)
Wet Sand Reclamation	15(89.5/z)	38(89.5/z)	10(89.5/z)	30(89.5/z)	.3(89.5/z)	.86(89.5/z)
Zinc						
Casting Quench	15(5.35/x)	38(5.35/x)	10(5.35/x)	30(5.35/x)	(3)	(3)
Die Casting	15(1.04/x)	38(1.04/x)	10(1.04/x)	30(1.04/x)	.3(1.04/x)	.86(1.04/x)
Melting Furnace Scrubber	15(.243/y)	38(.243/y)	10(.243/y)	30(.243/y)	.3(.243/y)	.86(.243/y)
Mold Cooling	15(47.3/x)	38(47.3/x)	10(47.3/x)	30(47.3/x)	(3)	(3)

* All 30-Day Maximum and Daily Maximum limitations are in mg/l units. The annual average limitations are in units of kg/1000 kkg (lb per million lb) of metal poured except for the Wet Sand Reclamation, Dust Collection Scrubber, and Melting Furnace Scrubber process segments. In the case of the latter two process segments. the annual average limitations are in units of kg/62.3 million Sm^3 (lb per billion SCF) of air scrubbed; in the case of the former process segment, the limitations are in units of kg/1000 kkg (lb per million lb) of sand reclaimed.

(1) Total Phenols - Phenols as measured by the 4-aminoantipyrene method (4AAP).

(2) Within the range of 7.0 to 10.0 at all times.

(3) Not regulated at NSPS for this process segment.

(5) Applicable to plants that cast primarily malleable iron where equal to or less than 3,557 tons of metal are poured per year and to plants that cast primarily steel.

X = Actual normalized process wastewater flow (in gallons per 1,000 pounds of metal poured) for the specific plant.

Y = Actual normalized process wastewater flow (in gallons per 1,000 SCF of air scrubbed) for the specific plant.

Z = Actual normalized process wastewater flow (in gallons per 1,000 pounds of sand reclaimed) for the specific plant.

TABLE XII-3 (Continued)

NSPS LIMITATIONS* COVERING NON-CONTINUOUS DIRECT WASTEWATER DISCHARGES

Subcategory and Process Segment	Copper 30-Day Max.	Copper Daily Max.	Lead 30-Day Max.	Lead Daily Max.	Zinc 30-Day Max.	Zinc Daily Max.	pH
Ferrous(5)							
Casting Cleaning	.16(5.35/x)	.29(5.35/x)	.39(5.35/x)	.79(5.35/x)	.56(5.35/x)	1.47(5.35/x)	(2)
Casting Quench	.16(5.7/x)	.29(5.7/x)	.39(5.7/x)	.79(5.7/x)	.56(5.7/x)	1.47(5.7/x)	(2)
Dust Collection Scrubber	.16(.09/y)	.29(.09/y)	.39(.09/y)	.79(.09/y)	.56(.09/y)	1.47(.09/y)	(2)
Grinding Scrubber	----------No Discharge of Pollutants----------						
Investment Casting	.16(1320/x)	.29(1320/x)	.39(1320/x)	.79(1320/x)	.56(1320/x)	1.47(1320/x)	(2)
Melting Furnace Scrubber	.16(.42/y)	.29(.42/y)	.39(.42/y)	.79(.42/y)	.56(.42/y)	1.47(.42/y)	(2)
Mold Cooling	.16(17.7/x)	.29(17.7/x)	.39(17.7/x)	.79(17.7/x)	.56(17.7/x)	1.47(17.7/x)	(2)
Slag Quench	.16(21.8/x)	.29(21.8/x)	.39(21.8/x)	.79(21.8/x)	.56(21.8/x)	1.47(21.8/x)	(2)
Wet Sand Reclamation	.16(89.5/z)	.29(89.5/z)	.39(89.5/z)	.79(89.5/z)	.56(89.5/z)	1.47(89.5/z)	(2)
Zinc							
Casting Quench	.42(5.35/x)	.77(5.35/x)	.26(5.35/x)	.53(5.35/x)	.29(5.35/x)	.76(5.35/x)	(2)
Die Castng	.42(1.04/x)	.77(1.04/x)	.26(1.04/x)	.53(1.04/x)	.29(1.04/x)	.76(1.04/x)	(2)
Melting Furnace Scrubber	.42(.243/y)	.77(.243/y)	.26(.243/y)	.53(.243/y)	.29(.243/y)	.76(.243/y)	(2)
Mold Cooling	.42(47.3/x)	.77(47.3/x)	.26(47.3/x)	.53(47.3/x)	.29(47.3/x)	.76(47.3/x)	(2)

* All 30-Day Maximum and Daily Maximum limitations are in mg/l units. The annual average limitations are in units of kg/1000 kkg (lb per million lb) of metal poured except for the Wet Sand Reclamation, Dust Collection Scrubber, and Melting Furnace Scrubber process segments. In the case of the latter two process segments, the annual average limitations are in units of kg/62.3 million Sm^3 (lb per billion SCF) of air scrubbed; in the case of the former process segment, the limitations are in units of kg/1000 kkg (lb per million lb) of sand reclaimed.

(1) Total Phenols - Phenols as measured by the 4-aminoantipyrene method (4AAP).

(2) Within the range of 7.0 to 10.0 at all times.

(3) Not regulated at NSPS for this process segment.

(5) Applicable to plants that cast primarily malleable iron where equal to or less than 3,557 tons of metal are poured per year and to plants that cast primarily steel.

X = Actual normalized process wastewater flow (in gallons per 1,000 pounds of metal poured) for the specific plant.

Y = Actual normalized process wastewater flow (in gallons per 1,000 SCF of air scrubbed) for the specific plant.

Z = Actual normalized process wastewater flow (in gallons per 1,000 pounds of sand reclaimed) for the specific plant.

SECTION XIII

PRETREATMENT STANDARDS

INTRODUCTION

Section 307(b) of the Clean Water Act requires EPA to promulgate pretreatment standards for existing sources (PSES). These standards must be achieved within three years of promulgation. PSES are designed to prevent the discharge of pollutants which pass through, interfere with, or are otherwise incompatible with the operation of publicly owned treatment works (POTW). The legislative history of the Clean Water Act of 1977 indicates that pretreatment standards are to be technology-based, analogous to the best available technology.

Section 307(c) of the Act requires EPA to promulgate pretreatment standards for new sources (PSNS) at the same time that it promulgates NSPS. New indirect discharging facilities, like new direct discharging facilities, have the opportunity to incorporate the best available demonstrated technologies, including process changes, in-plant controls, and end-of-pipe treatment technologies, and to use plant site selection to ensure adequate treatment system installation.

General Pretreatment Regulations applicable to all existing and new source indirect dischargers appear in 40 CFR Part 403.

This section describes the treatment and control technologies that form the basis of pretreatment standards to control process wastewater discharges from existing sources and new sources, and describes the calculation of mass discharge standards of regulated pollutants for existing and new sources, based on the described control technologies.

TECHNICAL APPROACH TO ESTABLISHING PRETREATMENT STANDARDS

Before finalizing pretreatment standards applicable to the metal molding and casting industry, the Agency examined whether the pollutants discharged by the industry pass through the POTW or interfere with the POTW operations or its chosen sludge disposal practices. In determining whether pollutants pass through a POTW, the Agency compares the percentage of pollutant removed by a POTW with the percentage removed by the application of BAT level treatment at indirect discharge facilities. A pollutant is considered to pass through the POTW when the average percentage removed nationwide by a well-operated POTW meeting secondary treatment requirements is less than the percentage removed upon compliance with PSES analagous to BAT level treatment.

This approach to the definition of pass through satisfies two competing objectives set by Congress: that standards for indirect dischargers be equivalent to standards for direct dischargers, while, at the same time, that the treatment capability and performance of the POTW be recognized and taken into account in regulating the discharge of pollutants from indirect dischargers. Rather than compare the mass or concentration of pollutants discharged by the POTW with the mass or concentration discharged using BAT level treatment, the Agency compares the percentage of the pollutants removed by the application of BAT level treatment. The Agency takes this approach because a comparison of the mass or concentration of pollutants in a POTW effluent with pollutants in an industrial effluent would not take into account the mass of pollutants discharged to the POTW from nonindustrial sources nor the dilution of the pollutants in the POTW effluent resulting from the addition of large amounts of nonindustrial wastewaters.

PASS THROUGH ANALYSIS

As explained in Sections X and XII, EPA has established BAT effluent limitations guidelines and NSPS controlling the following toxic and nonconventional pollutants: copper, lead, zinc, and total phenols. Additionally, as stated in Section X, EPA found treatable concentrations of toxic organic pollutants in raw wastewaters for 22 process segments. They are:

Aluminum Subcategory:	casting quench
	die casting
	dust collection scrubber
	investment casting
	melting furnace scrubber
	mold cooling
Copper Subcategory:	casting quench
	dust collection scrubber
	investment casting
	melting furnace scrubber
	mold cooling
Ferrous Subcategory:	casting quench
	dust collection scrubber
	investment casting
	melting furnace scrubber
	mold cooling
	slag quench
	wet sand reclamation
Zinc Subcategory:	casting quench
	die casting
	melting furnace scrubber
	mold cooling

This above list includes eight process segments where the control of TTO was not specifically indicated in the March 20, 1984 Notice of Availability. Control of TTO in these additional process segments is being required for the following reasons.

In response to public comments on the Agency's development of raw waste loads, EPA has reviewed and re-evaluated its raw waste data base. All sampling data have been normalized on the basis of the mass of pollutant generated per mass of metal poured or sand reclaimed or the volume of air scrubbed. The mass of pollutant generated was calculated on the basis of the production or air flow at each metal molding and casting plant sampled. The normalized pollutant mass generation rates were then averaged to determine an average process segment mass generation rate for each pollutant detected. At the completion of this reevaluation, the Agency identified two additional process segments with priority organic pollutant loads that warranted control through standards on TTO.

In addition, when the Agency considered the transfers of raw waste data discussed in Section V, it determined that organic priority pollutants should be controlled through standards on TTO in six process segments where transferred organics data indicated treatable levels of organics would be present. All data transfers have been made between similar process segments where pollutant loads, including priority pollutant organics, are introduced into the wastewater by the same mechanism. Therefore, the Agency expects the levels of priority organic pollutants in the segments to which data transfers have been made to be the same as in the process segments from which the data originated.

EPA has not established BAT effluent limitations guidelines for toxic organic compounds because the Agency determined that compliance with the BPT effluent limitations guidelines and NSPS for oil and grease provides effective removal of toxic organic compounds. To conduct its analysis of pass through of TTO, EPA determined the levels of TTO that would remain after the application of BAT level treatment in each of the 22 process segments where TTO is found at treatable levels.

EPA began by defining TTO separately for each of the 22 process segments to include only those toxic organic pollutants that were found at treatable concentrations in each process segment. EPA then determined the TTO treatment effectiveness concentrations attainable by the application of the best available technology economically achievable. As explained in detail in Section VII, EPA determined the treated effluent concentrations of various individual toxic organic pollutants based on the removal capability of four plants employing effective oil and grease removal technology. For the toxic organic pollutants that were not detected in raw wastewaters of the four plants, EPA estimated treatability concentrations by dividing all pollutants for which data were available into groups of pollutants with similar octanol/water partition coefficients. Organic pollutants for which sampling data were not available were assigned to one of

the groups depending on their partition coefficient and were assumed to have a treatability concentration equal to the mean effluent concentration of all pollutants in the group. For some pollutants, neither sampling data nor literature values for partition coefficients were available. In such cases, estimates were calculated using a parallel method based on the compound's solubility in water.

The TTO treatment effectiveness concentrations were derived by starting with the list of toxic organic pollutants in each process segment which were present above treatable concentrations. The treated effluent concentrations for each of the toxic organic pollutants were summed for each process segment to determine the long-term average treated effluent concentration for all of the toxic organic pollutants found in raw wastewater above treatable levels. A list of those toxic organic pollutants included as TTO for each process segment is attached as Appendix A.

Using the TTO treatment effectiveness concentrations and the flow basis of BAT/NSPS for each of the 22 process segments, EPA calculated long-term average TTO treated effluent loads representative of the application of the technology that forms the basis of BAT/NSPS. Using this information and the copper, lead, zinc, and total phenols long-term average treated effluent loads that form the basis of the BAT effluent limitations guidelines and NSPS, EPA calculated the percentage reductions of lead, copper, zinc, total phenols, and TTO that would result if all indirect dischargers were required to meet the BAT effluent limitations guidelines. These removals are shown on Table XIII-1.

The options considered for PSES are the same as the BAT options discussed in Section X. Additionally, as explained in Section XII, EPA established NSPS for the metal molding and casting category equal to the BAT effluent limitations guidelines. Therefore, the options considered for PSNS are also the same as the BAT options discussed in Section X.

As shown in Table XIII-1, the average removal of each of these pollutants at BAT level treatment for each of the metal subcategories was greater than the POTW removals. Accordingly, the Agency has concluded that these pollutants pass through POTWs and thus must be regulated under PSES. In addition, since toxic metals are not degraded in the POTW (they either pass through or are removed in the sludge), their presence in the POTW sludge may limit a POTW's chosen sludge disposal method.

POTW removal rates for these pollutants are also shown on Table XIII-1. They were determined by analyzing data from a study conducted by the Agency at over 40 POTWs. (See Fate of Priority Pollutants in Publicly Owned Treatment Works, Final Report, EPA 440/1-82/303, September 1982.) The percent removals achieved at POTWs were as follows: copper-58 percent, lead-48 percent, zinc-65 percent, total phenols (4-AAP)-89 percent, and total toxic

organics (TTO)-80 percent.

PSES AND PSNS OPTION SELECTION

EPA has promulgated PSES based on the application of technology equivalent to BAT because, as discussed above, EPA has found that the pollutants regulated at BAT pass through POTWs. With the following exceptions, PSES are based on the application of high rate recycle with lime and settle treatment plus filtration. As for BAT, EPA has based PSES on recycle, lime and settle for all plants with indirect discharge in the aluminum subcategory, the ferrous subcategory where steel is the primary metal cast, and for the relatively small plants (those that pour less than 3,557 tons per year) in the ferrous subcategory which cast primarily malleable iron. As for BAT, EPA is not establishing PSES for plants in the magnesium subcategory because the economic impact analysis indicates that the regulation is not economically achievable for the magnesium subcategory. Magnesium subcategory plants are subject to the General Pretreatment Regulations (40 CFR Part 403). Finally, the Agency's economic impact analysis indicates that for small plants in the ferrous subcategory which cast primarily gray iron and pour less than 1,784 tons of metal per year, the cost of complying with pretreatment standards based on recycle, lime and settle, and filtration is not economically achievable. Therefore, PSES for these small gray iron plants is based on recycle, lime and settle.

As explained in Section XII, NSPS are equal to the BAT effluent limitations guidelines for the metal molding and casting category. For this reason and for the reasons explained above, EPA has established PSNS equal to PSES.

REGULATED POLLUTANT PARAMETERS

EPA has established PSES and PSNS controlling all toxic and nonconventional pollutants regulated at BAT and NSPS that EPA found to pass through POTWs. These are: zinc, copper, lead, and total phenols. Additionally, as explained previously in this section, EPA determined that toxic organic pollutants discharged by metal molding and casting plants in all four subcategories are likely to pass through POTWs. Thus, EPA has established pretreatment standards controlling total toxic organic (TTO) pollutants for the 22 process segments where toxic organic pollutants were found at treatable concentrations in raw waste dischargers.

The analysis of wastewaters for toxic organcs is costly and requires sophisticated equipment. Therefore, the Agency has included in the final regulations an alternate monitoring paramater for TTO; the alternate parameter is oil and grease. Data indicate that the toxic organics are more soluble in oil and grease than in water, and that removal of oil and grease will substantially remove the toxic organics. Additionally, the TTO standard is based on the application of oil and grease removal technology. If oil and grease is controlled at the regulated

level, compliance with the TTO pretreatment standard is established.

PSES/PSNS FLOW

As explained previously, EPA established the flow bases of BPT on the lowest flow rates that the Agency believes were generally achievable for each subcategory segment. Accordingly, as explained in Sections X and XII, the flow bases of BAT and NSPS are the same as for BPT. Thus, the flow bases of BPT also form the bases of PSES/PSNS and are shown on Table XIII-2.

PSES/PSNS EFFLUENT STANDARDS

PSES are identical to PSNS because BAT effluent limitations guidelines are equal to NSPS.

PSES/PSNS, established on a mass basis (mass of pollutant allowed to be discharged per mass of metal poured, mass of sand reclaimed, or volume of wet scrubber air flow), are presented in Table XIII-3. EPA established mass-based pretreatment standards because high rate recycle will reduce significantly the quantity of pollutants discharged to POTWs from existing and new sources. These standards were calculated for each regulated pollutant in each process segment as follows: the PSES/PSNS normalized flow for each discharge segment (see Table XIII-2) was multiplied by the one-day maximum and by the maximum monthly average treatment effectiveness concentrations (see Tables VII-12 and VII-14) corresponding to the PSES/PSNS technology option selected for each subcategory. As explained in Section VII, the maximum monthly average treatment effectiveness concentration is based on the average of 10 samples over the period of a month.

The Agency has considered the time for compliance with PSES. Few of the plants in this industry with indirect discharge have installed and are operating properly the technology necessary for complying with PSES. Many plants in this and other industries will be procuring engineering services and installing treatment equipment utilized as model technologies for these regulations. This may result in delays in engineering design, equipment ordering and delivery, installation, start-up, and operating these systems. For these reasons, the Agency has decided to establish the PSES compliance date for all facilities at three years from the date of promulgation. PSNS must be attained immediately upon operation of the new indirect discharging source.

Municipal authorities also may elect to establish concentration-based pretreatment standards. They may do so provided the concentration-based standards are equivalent to the mass-based standards provided in Table XIII-3. Equivalent concentration standards may be established by multiplying the mass standards included in the Table XIII-3 by an appropriate measurement of average production, raw material usage, or air flow (kkg of metal poured, kkg of sand reclaimed, or standard cubic meters of air

scrubbed) and dividing by an appropriate measure of average discharge flow to the POTW, taking into account the proper conversion factors to ensure that the units (mg/l) are correct.

COST OF APPLICATION AND EFFLUENT REDUCTIONS BENEFITS

Implementation of PSES will remove a total of 1,290,000 kg/yr (2,845,000 lbs/yr) of toxic metal and toxic organic pollutants from wastewaters as currently discharged from indirect discharging plants. Compliance with PSES will require a total investment cost (beyond equipment in place) of $46.7 million, and a total annualized cost of $21.5 million (1985 dollars). The Agency has concluded that the PSES are economically achievable for the metal molding and casting point source category.

EPA anticipates that new metal molding and casting plants subject to PSNS that use wet scrubbing devices will remove toxic metal and toxic organic pollutants at approximately the same rates as will be removed by existing sources subject to PSES. Costs for new sources employing wet scrubbers are also expected to be comparable to those incurred by existing sources, although some piping and retrofit costs (e.g., stream segregation) will not be incurred by new source indirect discharging plants. If dry scrubbers are used, both costs and pollutant removals will be reduced considerably.

NON-WATER QUALITY ASPECTS OF PSES/PSNS

The following are the non-water quality environmental impacts (including energy requirements) associated with PSES/PSNS:

Air Pollution

Application of the technologies that form the basis of PSES and PSNS will not create any substantial air pollution problems. Minor very localized air pollution emissions currently exist in the ferrous casting subcategory where wastewaters are used to quench the hot slag generated in the melting process. Also water vapor containing some particulate matter is released from the cooling tower systems used in the casting quench and mold cooling process segments. However, none of these conditions currently are considered significant and no significant future impacts are expected as the result of PSES/PSNS.

Solid Waste

EPA estimates that the application of the technologies that form the basis of PSES will increase the quantity of sludges that must be landfilled by metal molding and casting plants by about 442,000 kkg (486,000 tons) per year beyond current levels. In addition, about 7,800 kkg (8,600 tons) per year of oily waste will be generated beyond current levels. As explained in Section VIII of this document, the Agency examined the solid wastes that would be generated by metal molding and casting processes using the model treatment technologies and has concluded that they are

not hazardous under Section 3001 of the Resource Conservation and Recovery Act (RCRA). Even though metal molding and casting wastes are not identified as hazardous, they still must be disposed of in a manner that will not violate the open dumping prohibition of section 4005 of RCRA.

EPA anticipates that new metal molding and casting plants subject to PSNS that use wet scrubbing devices will generate treatment system sludges at approximately the same rates as will be generated by existing sources subject to PSES. If dry scrubbers are used, the quantity of treatment system sludges to be disposed will be reduced considerably.

Consumptive Water Loss

EPA estimates that the evaporative water losses from the recycle systems that the Agency projects will be used to comply with the final PSES will be less than about 0.1 percent of the water losses that now occur from the air pollution control scrubbers used extensively throughout this industry. Therefore, compliance with PSES/PSNS is not expected to result in a significant consumptive water loss.

Energy Requirements

EPA estimates that compliance with PSES by indirect dischargers will result in a total incremental electrical energy consumption of 17×10^6 kilowatt-hours per year. This is an energy increase of 0.06 percent over the 31.3×10^9 kilowatt-hours used in 1978 for production purposes.

The energy requirements for PSNS are estimated to be similar to energy requirments for PSES on a per plant basis. More accurate estimates are difficult to make because projections for new plant construction are variable. It is estimated that new plants will design, wherever possible, production techniques and air pollution control devices that either require less water than current practices or require no water such as dry air pollution control devices. In these instances, less energy will be required for water pollution control because less wastewater would require treatment.

TABLE XIII-1

PASS-THROUGH ANALYSIS

Percent Removal at BAT Level Treatment

Subcategory	Copper[1]	Lead[2]	Zinc[3]	Total Phenols[4]	TTO[5]
Aluminum	94	97	99	99+	99+
Copper	99	98	99	99	82
Ferrous	99	99+	99+	99+	99
Zinc	99+	99+	99+	99	99+

1 POTW removal = 58%

2 POTW removal = 48%

3 POTW removal = 65%

4 POTW removal = 89%

5 TTO removal = 80%; this figure assumes that substantial quantities of toxic volatile organic pollutants that are reduced after the application of biological treatment in a POTW are "removed." Considerable evidence shows that a significant fraction of the volatile organic compounds are air stripped and not removed. This 80 percent figure would be substantially lower if credit were not taken for volatile compounds that are air stripped rather than biodegraded.

Table XIII-2

APPLIED FLOW RATES, RECYCLE RATES, AND DISCHARGE RATES THAT FORM THE BASIS OF PSES AND PSNS

Subcategory/Process Segment	Production Normalized Applied Flow Rate	Production Normalizing Parameter	Recycle Rate	Production Normalized Discharge Flow*
Aluminum				
Casting Cleaning	480 gal/ton	ton of metal poured	95%	24.0 gal/ton
Casting Quench	145 gal/ton	ton of metal poured	98%	2.90 gal/ton
Die Casting	41.4 gal/ton	ton of metal poured	95%	2.07 gal/ton
Dust Collection Scrubber	1.78 gal/1,000 SCF	1,000 SCF of air flow through the scrubber	98%	0.036 gal/1,000 SCF
Grinding Scrubber	0.063 gal/1,000 SCF	1,000 SCF of air flow through the scrubber	100%	0
Investment Casting	17,600 gal/ton	ton of metal poured	85%	2,640 gal/ton
Melting Furnace Scrubber	11.7 gal/1,000 SCF	1,000 SCF of air flow through the scrubber	96%	0.468 gal/1,000 SCF
Mold Cooling	1,850 gal/ton	ton of metal poured	95%	92.5 gal/ton
Copper				
Casting Quench	478 gal/ton	ton of metal poured	98%	9.56 gal/ton
Direct Chill Casting	5,780 gal/ton	ton of metal poured	95%	289 gal/ton
Dust Collection Scrubber	4.29 gal/1,000 SCF	1,000 SCF of air flow through the scrubber	98%	0.086 gal/1,000 SCF
Grinding Scrubber	0.111 gal/1,000 SCF	1,000 SCF of air flow through the scrubber	100%	0
Investment Casting	17,600 gal/ton	ton of metal poured	85%	2,640 gal/ton
Melting Furnace Scrubber	7.04 gal/1,000 SCF	1,000 SCF of air flow through the scrubber	96%	0.282 gal/1,000 SCF
Mold Cooling	2,450 gal/ton	ton of metal poured	95%	122 gal/ton
Ferrous				
Casting Cleaning	213 gal/ton	ton of metal poured	95%	10.7 gal/ton
Casting Quench	571 gal/ton	ton of metal poured	98%	11.4 gal/ton
Dust Collection Scrubber	3.0 gal/1,000 SCF	1,000 SCF of air flow through the scrubber	97%	0.090 gal/1,000 SCF
Grinding Scrubber	3.17 gal/1,000 SCF	1,000 SCF of air flow through the scrubber	100%	0
Investment Casting	17,600 gal/ton	ton of metal poured	85%	2,640 gal/ton
Melting Furnace Scrubber	10.5 gal/1,000 SCF	1,000 SCF of air flow through the scrubber	96%	0.420 gal/1,000 SCF

Table XIII-2 (Continued)

APPLIED FLOW RATES, RECYCLE RATES, AND DISCHARGE RATES THAT FORM THE BASIS OF PSES AND PSNS

Subcategory/Process Segment	Production Normalized Applied Flow Rate	Production Normalizing Parameter	Recycle Rate	Production Normalized Discharge Flow[a]
Ferrous (Cont.)				
Mold Cooling	707 gal/ton	ton of metal poured	95%	35.4 gal/ton
Slag Quench	727 gal/ton	ton of metal poured	94%	43.6 gal/ton
Wet Sand Reclamation	895 gal/ton	ton of sand reclaimed	80%	179 gal/ton
Zinc				
Casting Quench	533 gal/ton	ton of metal poured	98%	10.7 gal/ton
Die Casting	41.4 gal/ton	ton of metal poured	95%	2.07 gal/ton
Melting Furnace Scrubber	6.07 gal/1,000 SCF	1,000 SCF of air flow through the scrubber	96%	0.243 gal/1,000 SCF
Mold Cooling	1,890 gal/ton	ton of metal poured	95%	94.5 gal/ton

[a]Flow basis for mass limitations.

TABLE XIII-3

PSES AND PSNS LIMITATIONS* COVERING CONTINUOUS INDIRECT DISCHARGES

Subcategory and Process Segment	TTO 30-Day Max.	TTO Daily Max.	Oil & Grease(1) 30-Day Max.	Oil & Grease(1) Daily Max.	Phenols(2) 30-Day Max.	Phenols(2) Daily Max.	Copper 30-Day Max.	Copper Daily Max.	Lead 30-Day Max.	Lead Daily Max.	Zinc 30-Day Max.	Zinc Daily Max.	pH
Aluminum													
Casting Cleaning	(4)	(4)	(4)	(4)	(4)	(4)	.0421	.0771	.039	.0791	.0431	.114	(3)
Casting Quench	.0095	.029	.121	.363	(4)	(4)	.0051	.0093	.0047	.0096	.0052	.0138	(3)
Die Casting	.01	.0308	.0864	.259	.0026	.0074	.0036	.0066	.0034	.0068	.0037	.0098	(3)
Dust Collection Scrubber	.2	.613	3.00	9.01	.09	.258	.126	.231	.117	.237	.129	.343	(3)
Grinding Scrubber	No Discharge of Pollutants												
Investment Casting	5.91	18.1	110	330	(4)	(4)	4.63	8.48	4.3	8.7	4.74	12.6	(3)
Melting Furnace Scrubber	2.6	7.97	39.1	117	1.17	3.36	1.64	3.01	1.52	3.09	1.68	4.45	(3)
Mold Cooling	.304	.935	3.86	11.6	(4)	(4)	.162	.297	.151	.305	.166	.44	(3)
Copper													
Casting Quench	.0109	.0335	.399	1.2	(4)	(4)	.0168	.0307	.0104	.0211	.0116	.0303	(3)
Direct Chill Casting	(4)	(4)	(4)	(4)	(4)	(4)	.506	.928	.314	.639	.35	.916	(3)
Dust Collection Scrubber	.54	1.65	7.18	21.5	.215	.617	.301	.553	.187	.38	.208	.545	(3)
Grinding Scrubber	No Discharge of Pollutants												
Investment Casting	8.29	25.4	110	330	(4)	(4)	4.63	8.48	2.86	5.84	3.19	8.37	(3)
Melting Furnace Scrubber	1.77	5.41	23.5	70.6	.706	2.02	.988	1.81	.612	1.25	.673	1.79	(3)
Mold Cooling	.14	.428	5.09	15.3	(4)	(4)	.214	.392	.132	.27	.148	.387	(3)

* All limitations are in units of kg/1000 kkg (lb per million lb) of metal poured except for the Wet Sand Reclamation, Dust Collection Scrubber, and Melting Furnace Scrubber process segments. In the case of the latter two process segments, the limitations are in units of kg/62.3 million Sm^3 (lb per billion SCF) of air scrubbed; in the case of the former process segment, the limitations are in units of kg/1000 kkg (lb per million lb) of sand reclaimed.

(1) Alternate monitoring parameter for TTO.

(2) Total Phenols - Phenols as measured by the 4-aminoantipyrene method (4AAP).

(3) Within the range of 7.0 to 10.0 at all times.

(4) Not regulated at PSES for this process segment.

TABLE XIII-3 (Continued)

PSES AND PSNS LIMITATIONS* COVERING CONTINUOUS INDIRECT DISCHARGES

Subcategory and Process Segment	TTO 30-Day Max.	TTO Daily Max.	Oil & Grease(1) 30-Day Max.	Oil & Grease(1) Daily Max.	Phenols(2) 30-Day Max.	Phenols(2) Daily Max.	Copper 30-Day Max.	Copper Daily Max.	Lead 30-Day Max.	Lead Daily Max.	Zinc 30-Day Max.	Zinc Daily Max.	pH
Ferrous(5)													
Casting Cleaning	(4)	(4)	(4)	(4)	(4)	(4)	.0071	.0129	.0116	.0237	.0165	.0437	(3)
Casting Quench	.00838	.0257	.476	1.43	(4)	(4)	.0076	.0138	.0124	.0252	.0176	.0466	(3)
Dust Collection Scrubber	.664	2.04	7.51	22.5	.225	.646	.12	.218	.195	.398	.278	.736	(3)
Grinding Scrubber	No Discharge of Pollutants												
Investment Casting	4.3	13.2	110	330	(4)	(4)	1.76	3.19	2.86	5.84	4.07	10.8	(3)
Melting Furnace Scrubber	2.73	8.34	35	105	1.05	3.01	.561	1.02	.911	1.86	1.30	3.44	(3)
Mold Cooling	.026	.0797	1.48	4.43	(4)	(4)	.0236	.0428	.0384	.0783	.0546	.145	(3)
Slag Quench	.00838	.0257	1.82	5.46	(4)	(4)	.0291	.0527	.0473	.0964	.0673	.178	(3)
Wet Sand Reclamation	.386	1.18	7.47	22.4	.224	.642	.12	.217	.194	.396	.276	.732	(3)

* All limitations are in units of kg/1000 kkg (lb per million lb) of metal poured except for the Wet Sand Reclamation, Dust Collection Scrubber, and Melting Furnace Scrubber process segments. In the case of the latter two process segments, the limitations are in units of kg/62.3 million Sm^3 (lb per billion SCF) of air scrubbed; in the case of the former process segment, the limitations are in units of kg/1000 kkg (lb per million lb) of sand reclaimed.

(1) Alternate monitoring parameter for TTO.

(2) Total Phenols - Phenols as measured by the 4-aminoantipyrene method (4AAP).

(3) Within the range of 7.0 to 10.0 at all times.

(4) Not regulated at PSES for this process segment.

(5) Applicable to plants that are casting primarily ductile iron, to plants that are casting primarily malleable iron where greater than 3557 tons of metal are poured per year, and to plants that are casting primarily gray iron where greater than 1784 tons of metal are poured per year.

TABLE XIII-3 (Continued)

PSES AND PSNS LIMITATIONS* COVERING CONTINUOUS INDIRECT DISCHARGES

Subcategory and Process Segment	TTO 30-Day Max.	TTO Daily Max.	Oil & Grease(1) 30-Day Max.	Oil & Grease(1) Daily Max.	Phenols(2) 30-Day Max.	Phenols(2) Daily Max.	Copper 30-Day Max.	Copper Daily Max.	Lead 30-Day Max.	Lead Daily Max.	Zinc 30-Day Max.	Zinc Daily Max.	pH
Ferrous(6)													
Casting Cleaning	(4)	(4)	(4)	(4)	(4)	(4)	.0071	.0129	.0174	.0353	.025	.0656	(3)
Casting Quench	.00838	.0257	.476	1.43	(4)	(4)	.0076	.0138	.0185	.0376	.0266	.0699	(3)
Dust Collection Scrubber	.664	2.04	7.51	22.5	.225	.656	.12	.218	.293	.593	.421	1.1	(3)
Grinding Scrubber	No Discharge of Pollutants												
Investment Casting	4.3	13.2	110	330	(4)	(4)	1.76	3.19	4.3	8.7	6.17	16.2	(3)
Melting Furnace Scrubber	2.73	8.34	35	105	1.05	3.01	.561	1.02	1.37	2.77	1.96	5.15	(3)
Mold Cooling	.026	.0797	1.48	4.43	(4)	(4)	.0236	.0428	.0576	.117	.0827	.217	(3)
Slag Quench	.00838	.0257	1.82	5.46	(4)	(4)	.0291	.0527	.0709	.144	.102	.267	(3)
Wet Sand Reclamation	.386	1.18	7.47	22.4	.224	.642	.12	.217	.291	.59	.418	1.1	(3)
Zinc													
Casting Quench	.0304	.093	.446	1.34	(4)	(4)	.0187	.0344	.0116	.0237	.0129	.0339	(3)
Die Casting	.0064	.0196	.0864	.259	.0026	.0074	.0036	.0066	.0022	.0046	.0025	.0066	(3)
Melting Furnace Scrubber	1.29	3.95	20.3	60.8	.608	1.74	.852	1.56	.527	1.07	.588	1.54	(3)
Mold Cooling	.268	.821	3.94	11.8	(4)	(4)	.166	.304	.103	.209	.114	.3	(3)

* All limitations are in units of kg/1000 kkg (lb per million lb) of metal poured except for the Wet Sand Reclamation, Dust Collection Scrubber, and Melting Furnace Scrubber process segments. In the case of the latter two process segments, the limitations are in units of kg/62.3 million Sm^3 (lb per billion SCF) of air scrubbed; in the case of the former process segment, the limitations are in units of kg/1000 kkg (lb per million lb) of sand reclaimed.

(1) Alternate monitoring parameter for TTO.

(2) Total Phenols - Phenols as measured by the 4-aminoantipyrene method (4AAP).

(3) Within the range of 7.0 to 10.0 at all times.

(4) Not regulated at PSES for this process.

(6) Applicable to plants that are casting primarily steel, to plants that are casting primarily malleable iron where equal to or less than 3557 tons of metal poured per year, and to plants that are casting primarily gray iron where equal to or less than 1784 tons of metal are poured per year.

SECTION XIV

ACKNOWLEDGEMENTS

All of the data gathering and engineering analyses which supported the proposed regulations was performed by the NUS Corporation. Subsequent to proposal, a major effort was undertaken to verify a large number of comments regarding the accuracy and completeness of the data base. Most of the supplemental data gathering and engineering analyses also were performed by the NUS Corporation, under the leadership of Mr. J. Steven Paquette. Assisting Mr. Paquette with major contributions were Mr. Joseph Boros, Ms. Joan O. Knapp, Ms. Judith A. Delconte, Mr. Raymond Wattras, and Mr. Michael Runatz. Assistance also was provided by Mr. William Wall, Ms. Catherine Chambers, Mr. Robert Griffin, Mr. Albert Finke, Mr. Patrick Falvey, and Mr. Kenneth Wolfe. Clerical assistance was provided by Ms. Rane Wagner. The dedication and sacrifices of this entire staff of NUS personnel is appreciated.

Completion of the data gathering, engineering analyses, and related support services was accomplished by the Radian Corporation under the management of Mr. James Sherman and Mr. Mark Hereth. Mr. Roy Sieber and Ms. Karen Christensen performed these analyses and provided excellent and timely support in completing final rulemaking and preparing this Development Document. Word processing support was performed by Ms. Nancy Johnson. Without these support services, this rulemaking would not be possible.

The Agency wishes to express sincere thanks to the industry trade associations which assisted in gathering and verifying an extensive data base, and in providing constructive comments and suggestions throughout the rulemaking process. Special thanks go to Mr. Walter Kiplinger and the Cast Metals Federation; Mr. William Huelsen, Mr. Gary Mosher and the American Foundryman's Society; and Mr. Peter A.R. Findlay and the American Die Casting Institute. The Agency also wishes to express sincere thanks to the numerous metal molding and casting plant owners, managers, and engineers who submitted data, responded to Data Collection Portfolios and comment verification requests, provided constructive comments, and graciously opened their plants to EPA and contractor personnel.

A number of people within EPA made major contributions to this rulemaking effort, including Ms. Eleanor Zimmerman, Mr. Rod Frederick and their supporting contractor (Versar Corp.); Mr. Mark Luttner and supporting contractor (Policy Planning and Evaluation, Inc.); and Mr. Henry Kahn, Mr. Barnes Johnson, Mr. Matthew Hnatov and supporting contractor (JRB Associates, Inc.). Ms. Ellen Siegler is specially acknowledged for her extensive

efforts and major contribution to the integrity, readability, and legal rationale of the preamble, regulations, this Development Document, and the comment response documents. The deft guidance and tireless efforts of Mr. Robert W. Dellinger were essential to the successful culmination of this rulemaking effort. Also, Ms. Wendy Smith was the major contributor to completion of the coment response documents, and Dr. Frank Hund contributed extensively to preparation of the preamble and regulations, and other parts of the rulemaking package. The constant vigil of Mr. Edward Dulaney was essential to compiling and making available the extensive record for this rulemaking, as well as working with NUS Corporation and Radian Corporation, assisting in the data gathering and review process, and many other important support tasks. Finally, word processing for the preamble, regulations, Development Document, and comment response documents was performed by Ms. Carol Swann. Her personal sacrifices and long hours made possible the completion of this rulemaking under stringent deadlines, and the availability of this high quality document.

SECTION XV

REFERENCES

Bader, A.J., "Waste Treatment for an Automated Gray and Nodular Iron Foundry", Proceedings of the Industrial Waste Conference, 22nd, Purdue University, pp. 468-476 (1967).

Beck, A.G., "An Instrument Method for Determination of Residual Permanganate and Permanganate Demand", Water and Wastes Engineering, pp. 42-43 (December 1968).

Building Construction Cost Data, 1978 Edition.

Chiou, Cary T., "Partition Coefficients of Organic Compounds in Lipid-Water Systems and Correlation with Fish Bioconcentration Factors", Environmental Science and Technology, Volume 19, No. 1, pp 57-62 (January, 1985).

"Chrysler's Winfield Foundry Solves Pollution Problem", Foundry, 97, pp. 612, 167-169 (September, 1969).

"Cupola Emission Control", Engles and Weber, 1967.

"Cupola Pollution Control at Unicast", Foundry, 98, pp, 240, 242 (April, 1970).

Deacon, J.S. "In Defense of the Wet Cap", Modern Casting, pp. 48-49 (September, 1973).

Eckenfelder, W. Wesley, Industrial Water Pollution Control.

"Emissions Control System is Based on Impingement", Foundry, 101, N. 9, pp. 108-110 (September, 1973).

"1973 Outlook", Foundry (January, 1973).

"Foundries Look at the Future", Foundry (October, 1972).

Fox, L.L. and Merrick, N.J., "Controlling Residual Polychlorinated Biphenyls in Wastewater Treatment through Conventional Means", Proceedings of the 37th Industrial Waste Conference May 11, 12, and 13, 1982. Purdue University West Lafeyette, Indiana. Ann Arbor Science Publishers (1982).

Harn, R.K., Boyle, W.C., and Blaha, F.J., "Leachate and Groundwater Quality in and Around Ferrous Foundry Landfills and Comparisons to Leach Test Results". American Foundrymen's Society, Des Plaines, Illinois. January, 1985.

"Inventory of Foundry Equipment", Foundry (May, 1968).

"Iron Casting Handbook", Gray and Ductile Iron Foundries Society, Inc., Cleveland, Ohio. 1971.

Jordan, J. W., Memorandum to Regional Permits Branch Chiefs: Calculation of Production - Based Effluent Limits, Environmental Protection Agency, Washington, D.C., December 1984.

Kanicki, D. "Water at Neenah Foundry", Modern Casting, p. 44 (July, 1978).

Kearney, A.T. and Company, Inc., "Study of Economic Impacts of Pollution Control on the Iron Foundry Industry", 1971.

Manual of Standard Industrial Classification, 1967

Menerow, N.L., Industrial Water Pollution.

"Metal Casting Industry Census Guide", Foundry (August, 1972).

Miske, Jack C., "Environment Control at Dayton Foundry", Foundry, 98, pp. 68-69 (May, 1970).

Parsons, A., Chemical Treatment of Sewage and Industrial Wastes.

Peters, M. S., and Timmerhaus, K. D., Plant Design and Economics for Chemical Engineers, Third Edition. McGraw Hill Book Company, 1980.

"Potassium Permanganate Frees Effluent of Phenols", Chemical Processing, p. 22 (September, 1975).

"Richardson Rapid System", 1978-79 Edition, by Richardson Engineering Services, Inc.

"Sand Reclamation - A Status Report of Committee 80-S", Modern Casting, Manual 79, pp. 60.

"Settling Basins Clean GM Foundry Water," Foundry, 97, p. 146 (February, 1969).

Spicher, R., and Skrinde, R., "Potassium Permangante Oxidation of Organic Contaminants in Water Supplies", Journal of the AWWA. (September, 1963).

Stewart, R., Oxidation Mechanisms - Applications to Organic Chemistry, W.A. Benjamin, Inc., New York, 1964.

Throop, W., and Boyle, W., "Perplexing Foundry Phenols "American Foundrymen's Society Transactions, pp. 393-400 #75-38.

U.S. Department of Commerce, "Iron and Steel Castings, November 1984", Current Industrial Reports, ME33A(84)-11 (1984).

U.S. Department of Commerce, "Iron and Steel Foundries and Steel Ingot Producers", Current Industrial Reports, (1971).

U.S. Department of Commerce, "Iron and Steel Foundries and Steel Ingot Producers, Summary for 1983", Current Industrial Reports, ME33A(83)-13 (1983).

U.S. Department of Commerce, "Nonferrous Castings, November 1984" Current Industrial Reports, ME33E(84)-11 (1984).

U.S. Department of Commerce, "Nonferrous Castings, Summary for 1983", Current Industrial Reports, ME33E(83)-13 (1983).

U.S. Department of Health, Education and Welfare, Public Health Service Publication, #99-AP-40.

U.S. Environmental Protection Agency, Development Document for Effluent Limitations Guidelines and Standards for the Iron and Steel Manufacturing Point Source Category - Final, EPA 440/182/024, Washington, D.C., May 1982.

U.S. Environmental Protection Agency, Guidance Manual for Implementing Total Toxic Organics (TTO) Pretreatment Standards, Washington D.C., September 1985.

U.S. Environmental Protection Agency, Guidance Manual for the Use of Production Based Pretreatment Standards and the Combined Wastestream Formula, Washington D.C., September 1985.

U.S. Environmental Protection Agency, Sampling and Analysis of Wastes Generated by Gray Iron Foundries, EPA 600/4-81-028, Washington D.C., April 1981.

Wagner, A.J., "Grede's Wichita Midwest Division Honored for Top Environmental Control Job", Modern Casting, 58, N.6, pp. 40-43 (December, 1970).

"Water Pollution From Foundry Wastes", American Foundrymen's Society, 1967.

Waters, O.B., "Total Water Recycling for Sand System Scrubbers", Modern Casting, pp. 31-32 (July, 1973).

Wiese-Nielsen, K., "High Pressure Water Jets Remove Investment Casting Shells", Foundry M/T, (September, 1977).

SECTION XVI

GLOSSARY

This section is an alphabetical listing of the technical terms (with definitions) used in this document that may not be familiar to the reader.

4-AAP Colorimetric Method

An analytical method used to detect and quantify total phenols and total phenolic compounds. The method involves reaction with the color developing agent 4-aminoantipyrine.

Acidity

The quantitative capacity of aqueous solutions to react with hydroxyl ions. The acidity of a solution is measured by titrating the solution with a standard solution of a base to a specified end point. Acidity is usually expressed as milligrams of calcium carbonate per liter.

Acrylic Resins

Synthetic resins used as sand binders in core making. These resins are formed by the polymerization of acrylic acid or one of its derivatives using benzoyl peroxide or a similar catalyst. The most frequently used starting materials for acrylic resins include acrylic acid, methacrylic acid, or acrylonitrile. Exposure of these binder materials to hot metal temperatures can cause breakdown of the chemical bonds within the resin molecules and subsequent generation of cyanide.

The Act

The Federal Water Pollution Control Act Amendments of 1972 as amended by the Clean Water Act of 1977 (P.L. 92-500).

Agglomerate

The collecting of small particles together into a larger mass.

Air Setting Binders

Sand binders which harden upon exposure to air. Sodium silicate, Portland cement, and oxychloride are the primary constituents of such binders. Air setting binders that are composed primarily of oxychloride contain up to 10 percent finely divided metallic copper. The copper is added to off-set the effects of such impurities as calcium oxide, calcium hydroxide, and calcium silicate, which may be introduced during the blending of oxychloride. These impurities otherwise would decrease mold strength and durability.

Alkyd Resin Binders

Cold set resins used in the formation of cores. This type of binder is a three component system using alkyd-isocyanate, cobalt naphthenate, and diphenyl methane di-isocyanate. Cobalt naphthenate is the drier, and diphenyl methane di-isocyanate is the catalyst. Exposure of these binders to hot metal temperatures can cause the breakdown of these binder materials, and the resulting degradation products might include naphthalenes, phenols, and cyanides.

Alloy

A mixture having metallic properties, composed of two or more chemical elements at least one of which is an elemental metal.

Alloying Element

An element added to a metal to effect changes in properties, and which remains within the metal. The following is a list of materials known to be used as alloying materials or additives in foundry metals:

Aluminum	Chromium	Manganese	Sulfur
Beryllium	Cobalt	Molybdenum	Tantalum
Bismuth	Columbium	Nickel	Tin
Boron	Copper	Nitrogen	Titanium
Cadmium	Hydrogen	Oxygen	Tungsten
Calcium	Iron	Phosphorus	Vanadium
Carbon	Lead	Potassium	Zinc
Cerium	Lithium	Selenium	Zirconium
Chloride	Magnesium	Silicon	

Amortization

The allocation of a cost over a specified period of time by the use of regular payments. The size of the payments is based on the principal, the interest charged, and the length of time over which the cost is allocated.

Analytical Quantification Level

The analytical quantification level of a pollutant is the minimum concentration at which concentrations of that pollutant can be reliably measured.

Backwashing

The operation of cleaning a filter or column by reversing the flow of liquid through it, thus washing out matter previously trapped.

Baghouse

An independent structure or building that houses fabric bag filters, which are used to remove dust from air. A baghouse usually incorporates fans and dust conveying equipment.

Batch Treatment

A waste treatment method where wastewater is collected over a period of time, and the collected wastewater is treated in a tank or lagoon prior to discharge. Wastewater collection may be continuous when treatment is batch.

Bench-Scale Pilot Studies

Laboratory experiments providing data concerning the treatability of a wastewater stream or the efficiency of a treatment process. Bench-scale experiments are conducted using laboratory-size equipment.

Best Available Demonstrated Technology (BDT)

The treatment technology upon which new source performance standards are based, as defined by Section 306 of the Act.

Best Available Technology Economically Achievable (BAT)

The level of technology chosen as the basis for effluent limitations, applicable to toxic and nonconventional pollutants, to be achieved by July 1, 1984. BAT effluent limitations are established based on the degree of effluent reduction that this technology can attain. BAT limitations apply to industrial point sources discharging to surface waters as defined in Section 301(b)(2)(E) of the Act.

Best Conventional Pollutant Control Technology (BCT)

The level of technology chosen as the basis for effluent limitations, applicable to conventional pollutants, to be achieved by July 1, 1984. BCT effluent limitations are established based on the degree of effluent reduction that this technology can attain. BCT limitations apply to industrial point sources discharging to surface waters as defined in Section 301(b)(2)(E) of the Act.

Best Management Practices (BMP)

Regulations intended to control the release of toxic and hazardous pollutants from plant runoff, spillage, leaks, solid waste disposal, and drainage from raw material storage.

Best Practicable Control Technology Currently Available (BPT)

The level of technology chosen as the basis for effluent limitations, applicable to toxic and nonconventional pollutants, that was to have been achieved by July 1, 1977. BPT effluent limitations are established based on the degree of effluent reduction that this technology can attain. BPT limitations apply to industrial point sources discharging to surface waters as defined in Section 301(b)(1)(A) of the Act.

Binder

A material, other than water, added to foundry sand to bind the particles together, sometimes with the use of heat.

Biochemical Oxygen Demand (BOD)

The quantity of oxygen used in the biochemical oxidation of organic matter under specified conditions for a specified time.

Blast Furnace

A shaft furnace in which solid fuel is burned with an air blast to smelt ore in a continuous operation. Where the temperature must be high, as in the production of pig iron, the air is preheated. Where the temperature can be lower, as in smelting copper, lead, and tin ores, a smaller furnace is economical, and preheating of the blast is not required.

Blowdown

The minimum discharge of circulating water from a unit operation such as a scrubber for the purpose of discharging dissolved solids or other contaminants contained in the water.

Borides

A class of boron-containing compounds, primarily calcium boride, used as a constituent in refractory materials. Metallic impurities that often accompany the use of these materials include titanium, zirconium, hafnium, vanadium, niobium, tantalum, chromium, molybdenum, tungsten, thorium, and uranium.

Bulk Bed Washer

A type of wet dust collector consisting of a bed of lightweight spheres through which the dust laden air must pass while being sprayed by water or another scrubbing liquor.

Carbon Reduction

The process of using the carbon of coke as a reducing agent in the blast furnace.

Catalysts

Materials that accelerate the setting of binders used in core and mold formation. Phosphoric acid and toluenesulfonic acid are common set catalysts. Exposure of residual catalyst materials in the mold to hot metal temperatures could cause chemical breakdown of these materials with the possible generation of free toluene.

Charcoal

A product of the destructive distillation of wood. Used as a fuel and as a source of carbon in the foundry industry. Because of the nature of the destructive distillation process, charcoal may contain residuals of toxic pollutants such as phenol, benzene, toluene, naphthalene, and nitrosamines.

Charge

The combination of liquid and solid materials fed into a furnace for one cycle of its operation.

Chemical Oxygen Demand (COD)

A measure of the oxygen-consuming capacity of the organic and inorganic matter present in the water or wastewater.

Chrome Sand (Chrome-Iron Ore)

A dark material containing dark brown streaks with submetallic to metallic luster. Usually found as grains disseminated in perioditite rocks. Used in the preparation of molds.

Chromite Flour (see Chrome Sand above)

Chrome sand ground to 200 mesh or finer which can be used as a filler material for mold coatings for steel castings.

Clarification

The process of removing undissolved materials from a liquid, specifically by sedimentation. A clarifier is a specialized piece of equipment used for this purpose.

Classifier

A device that separates particles from a fluid stream by size. Stream velocity is gradually reduced, and the larger sized particles drop out when the stream velocity can no longer carry them.

Cleaning Agents and Degreasers

Solvents used to clean oil and grease or dirt from the surface of a metal. Common cleaning and degreasing agents include ethylene dichloride, polychloroethylene, and trichloroethylene.

Coagulant

A compound which, when added to a wastewater stream, enhances wastewater settleability. The coagulant aids in the binding and agglomeration of the particles suspended in the wastewater.

Coatings - Corrosion Resistant

Generally alkyd or epoxy resins. See Alkyd Resin Binders and Epoxy Resins. Applied to metal molds to prevent surface corrosion.

Coke-Foundry

The residue from the destructive distillation of coal. A primary ingredient in the making of cast iron in the cupola. Because of the nature of the destructive distillation process and impurities in the coal, the coke may contain residuals of toxic pollutants such as phenol, benzene, toluene, naphthalene, and nitrosamines.

Coke-Petroleum

Formed by the destructive distillation of petroleum. Like foundry coke, petroleum coke can also be used for making cast iron in the cupola.

Coke-Pitch

Formed by the destructive distillation of petroleum pitch. Used as a binder in the sand molding process.

Cold-Set Resins

Resins that set or harden without the application of heat. Used in foundry operations as sand binders.

Complete Recycle

The complete reuse of a stream, with makeup water added for evaporation losses. There is no blowdown stream from a totally recycled flow and the process water is not periodically or continuously discharged.

Composite Samples

A series of samples collected over a period of time but combined into a single sample for analysis. The individual samples can be taken after a specified amount of time has passed (time composited), or after a specified volume of water has passed the sampling point (flow composited). The sample can be automatically collected and composited by a sampler or can be manually collected and combined.

Consent Decree (Settlement Agreement)

Agreement between EPA and various environmental groups, as instituted by the United States District Court for the District of Columbia, directing EPA to study and promulgate regulations for the toxic pollutants (NRDC, Inc. v. Train, 8 ERC 2120 (D.D.C. 1976), modified March 9, 1979, 12 ERC 1833, 1841).

Contact Water

Any water or oil that comes into direct contact with the metal being cast, or with a mold that has been in direct contact with the metal. The metal contacted may be raw material, intermediate product, waste product, or finished product.

Continuous Treatment

Treatment of waste streams operating without interruption (as opposed to batch treatment). Sometimes referred to as flow-through treatment.

Contractor Removal

Disposal of oils, spent solutions, or sludge by a commercial firm.

Conventional Pollutants

Constituents of wastewater as determined by Section 304(a)(4) of the Act, including but not limited to pollutants classified as biological-oxygen-demanding, oil and grease, suspended solids, fecal coliforms, and pH.

Coolants

Water, oil and air. Their use is determined by the extent and rate of cooling desired.

Cooling Tower

A hollow, vertical structure with internal baffles designed to break up falling water so that it is cooled by upward-flowing air and the evaporation of water.

Cope

The top half of a two-piece sand mold.

Core

A very firm shape of sand used to obtain a hollow section in a casting. The core is placed in a mold cavity to give interior shape to the casting.

Core Binders

Bonding and holding materials used in the formation of sand cores. The three general types consist of those that harden at room temperature, those that require baking, and the natural clays. Binders that harden at room temperature include sodium silicate, Portland cement, and chemical cements such as oxychloride. Binders that require baking include the resins, resin oils, pitch, molasses, cereals, sulfide liquor, and proteins. Fireclay and bentonite are the natural clay binders.

Core Binder Accelerators

Used in conjunction with furan resins to cause hardening of the resin-sand mixture at room temperature. The most commonly used accelerator is phosphoric acid.

Core and Mold Washes

A mixture of various materials, primarily graphite, used to obtain a better finish on castings, including smoother surfaces, less scabbing and buckling, and less metal penetration. The filler material for washes should be refractory type composed of silica flour, zircon flour or chromite flour.

Core Oils

Used in oil-sand cores as a parting agent to prevent the core material from sticking to the cast metal. Core oils are generally classified as mineral oils (refined petroleum oils) and are available as proprietary mixtures or can be ordered to specification. Typical core oils have specific gravities of 0.93 to 0.965 and contain a minimum of 70 percent nonvolatiles at 177oC (350oF).

Crucible

A highly refractory vessel used to melt metals.

Cupola

A vertical shaft furnace consisting of a cylindrical steel shell lined with refractories and equipped with air inlets at the base and an opening near the top for charging fuel and melting stock.

Cyclones

A funnel-shaped device for removing particulates from air or other fluids by centrifugal means.

Data Collection Portfolio (DCP)

The written questionnaire used to survey the metal molding and casting industry.

Die Casting

A casting process where molten metal is forced under high pressure into the cavity of a metal mold.

Die Coatings

Oil containing lubricants or parting compounds such as carbon tetrachloride, cyclohexane, methylene chloride, xylene and hexamethylenetetramine. The coatings are used to prevent castings from adhering to the die and to provide a casting with a better finish. A correctly chosen lubricant will allow metal to flow into cavities that otherwise cannot be filled.

Direct Chill Casting

A method of casting where the molten metal is poured into a water-cooled mold. The base of this mold is the top of a hydraulic cylinder that lowers the metal first through the mold and then through a water spray and bath to cause solidification. The vertical distance of the drop limits the length of the ingot. This process is also known as semi-continuous casting.

Direct Discharger

Any point source that discharges to a surface water.

Drag

The lower half of a two-piece sand mold.

Drying Beds

Areas for the dewatering of sludge by evaporation and seepage.

Effluent

Wastewater discharged from a point source.

Effluent Limitation

Any standard (including schedules of compliance) established by a state or EPA on quantities, rates, and concentrations of chemical, physical, biological, and other constituents that are discharged from point sources into navigable waters, the waters of the contiguous zone, or the ocean.

Electrode

Long cylindrical rods made of carbon or graphite used in electric arc furnaces to conduct electricity into the metal charge.

Epoxy Resins

Two-component resins used to provide corrosion resistant coatings for metallic molds or castings. These materials are synthetic resins obtained by the condensation or polymerization of phenol, acetone, and epichlorohydrin (chloropropylene oxide). Alkyds, acrylates, methacrylates, and allyls, hydrocarbon polymers such as indene, coumarone and styrene, silicon resins, and natural and synthetic rubbers all can be applied as additives or bases. Polyamine and amine based compounds are normally used as curing agents. Because of the temperatures to which these materials are exposed, and because of the types of materials that are used to produce many of the components of these materials, toxic pollutants such as zinc, nickel, phenol, benzene, toluene, naphthalene, and possibly nitrosamines could be generated.

Filter Cake

That layer of dewatered sludge removed from the surface of a filter. Filters are used to reduce the volume of sludge generated as a result of the waste treatment process.

Flashing

In die casting, the fin of metal that results from leakage between the mating die surfaces.

Flask

A rectangular frame open at top and bottom used to retain molding sand around a pattern.

Flocculation

The process by which particles agglomerate, resulting in an increase in particle size and settleability.

Flux

A substance added to molten metal to help remove impurities and prevent excessive oxidation, or promote the fusing of the metals.

Furan Resin

A heterocyclic ring compound formed from diene and cyclic vinyl ether. Its main use is as a cold set resin in conjunction with acid accelerators such as phosphoric or toluene sulfonic acid for making core sand mixtures that harden at room temperature. Toluene could be formed during thermal degradation of furan resins during metal pouring.

Furfuryl Alcohol

A synthetic resin used to formulate core binders. The amount of furfuryl alcohol used in the binder formulation depends on the desired core strength. One method of formulating furfuryl alcohol is by batch hydrogenation of furfuryl at elevated temperature and pressure with a copper chromite catalyst.

Gas Chromatography/Mass Spectroscopy (GC/MS)

Chemical analytical instrumentation used for quantitative organic analysis.

Gate

An entry passage for molten metal into a mold.

Gilsonite

A material used primarily for sand binders. It is one of the purest natural bitumens (99.9 percent) and is found in lead mines. Lead may be present as an impurity in Gilsonite.

Grab Sample

A single sample of wastewater taken without regard to time or flow.

Gypsum Cement

A group of cements consisting primarily of calcium sulfate and produced by the complete dehydration of gypsum. It usually contains additives such as aluminum sulfate or potassium carbonate. It is used in sand binder formulation.

Head

A large reservoir of molten metal incorporated into a mold to supply hot metal to a shrinking portion of a casting during its cooling stage.

Heat Treatment

Heating and cooling a solid metal or alloy in such a way as to obtain desired conditions or properties. Heating for the sole purpose of hot working is excluded from the meaning of this definition.

Hydraulic Cyclone

A fluid classifying device that separates heavier particles from a slurry.

Impingement

The striking of air or gas-borne particles on a wall or baffle.

Impregnating Compounds

Materials of low viscosity and surface tension, used primarily for the sealing of castings. Polyester resins and sodium silicate are the two types of materials used. Phthalic anhydride and diallyl phthalate are used in the formulation of the polyester resins.

Indirect Discharger

Any point source that discharges to a publicly owned treatment works.

Induction Furnace

A crucible surrounded by coils carrying alternating electric current. The current induces magnetic forces into the metal charged into the crucible. These forces cause the metal to heat.

Inductively-Coupled Argon Plasma Spectrophotometer (ICAP)

A laboratory device used for the analysis of metals.

In-Process Control Technology

Any procedure or equipment used to conserve chemicals and water throughout the production operations, resulting in a reduction of the wastewater volume.

Investment Mold Materials

A broad range of waxes and resins including vegetable wax, mineral wax, synthetic wax, petroleum wax, insect wax, rosin, terpene resins, coal tar resins, chlorinated elastomer resins, and polyethylene resins used in the manufacture and use of investment molds. The presence of coal tar resins in investment mold materials indicate the possible presence of toxic pollutants such as phenol, benzene, toluene, naphthalene, and nitrosamines as residues in the resins or as possible products of degradation of these resins when subjected to heat.

Ladle

A vessel used to hold or pour molten metal.

Lignin Binders

Additives incorporated into resin-sand mixtures to improve surface finish and to eliminate thermal cracking during pouring. Lignin is a major polymeric component of woody tissue composed of repeating phenyl propane units. It generally amounts to 20-30 percent of the dry weight of wood. Phenol might be generated during thermal degradation of lignin binders during metal pouring.

Lubricants

Substances added to resin-sand mixtures to permit the easy release of molds from patterns. Calcium stearate, zinc stearate and carnauba wax are common lubricating agents.

Mica

A class of silicates with widely varying composition used in the refractory making process. They are essentially silicates of aluminum but are sometimes partially replaced by iron, chromium and an alkali such as potassium, sodium or lithium.

Mold

A form made of sand, metal, or refractory material that contains the cavity into which molten metal is poured to produce a casting of definite shape and outline.

MOLDING

CO_2 Molding. The CO_2 (carbon dioxide) molding process uses sodium silicate binders to replace the clay binders used in sand molds and cores. In the CO_2 process, a low-strength mold or core is made with a mixture of sodium silicate (3-4 percent) and sand. Carbon dioxide gas is passed through the sand, causing the sodium silicate to develop a dry compressive strength greater than 200 psi. Ready-to-use cores and complete molds can be made quickly, with no baking or drying needed. The high strength developed by the CO_2 process enables molds to be made and poured without backup flasks or jackets.

Investment Casting. Casting metal into a mold produced by surrounding (investing) an expendable pattern with a refractory slurry that sets at room temperature. After the mold has set, the wax, plastic or frozen mercury pattern is removed through the use of heat. Also called precision casting, or lost-wax process.

No-Bake Molding. The process is of fairly recent (15 years) origin. The sand coating consists of a binder and catalyst; their interaction results in a molded sand with high green strength (over 200 psi). No heat is required to set the mold. The amount of sand used and the general form of the molds are similar to green sand operations; however, the high strength permits flask removal and mold pouring without a jacket. The castings poured using this process have good dimensional accuracy and excellent finish.

Permanent Mold Casting. Metal molding using molds that consist of two or more metal parts, used repeatedly for the production of many castings of the same form. The molten metal enters the mold by gravity. Permanent mold casting is particularly suitable for high-volume production of small, simple cast-ings that have a uniform wall thickness and no undercuts or intricate internal coring.

Plaster Mold Casting. Molding wherein a gypsum-bonded aggregate flour in the form of a water slurry is poured over a pattern, permitted to harden, and after removal of the pattern, thoroughly dried. Plaster mold casting is used to produce nonferrous castings that have greater dimensional accuracy, smoother surfaces, and more-finely reproduced details than can be obtained with sand molds or permanent molds.

Shell Molding. Shell molding is a process in which a mold is formed from a mixture of sand and a heat-setting resin binder. The sand resin mixture is placed in a heated metal pattern in which the heat causes the binder to set. As the sand grains adhere to each other, a sturdy shell, which becomes one half of the mold, is formed. The halves are placed together with cores located properly, clamped and adequately backed up, and then the mold is poured. This process produces castings with good surface finish and good dimensional accuracy while using smaller amounts of molding sand.

New Source Performance Standards (NSPS)

Effluent limitations for new industrial point sources as defined by Section 306 of the Act.

No-Bake Binders

Sand binders that set without the addition of heat. Furan resins and alkyd-isocyanate compounds are the two predominant no-bake binders. Furan resins, as previously mentioned, are cyclic compounds which use phosphoric acid or toluenesulfonic acid as the setting agents.

Nonconventional Pollutant

Parameters selected for consideration in performance standards that have not been previously designated as either conventional or toxic pollutants.

Non-Water Quality Environmental Impact

The ecological impact as a result of solid, air, or thermal pollution due to the application of various wastewater technologies to achieve the effluent guidelines limitations. Also associated with the non-water quality aspect is the energy impact of wastewater treatment.

NPDES Permits

Permits issued by EPA or an approved state program under the National Pollutant Discharge Elimination System, as required by the Clean Water Act.

Off-Gases

Gases, vapors, and fumes produced as a result of metal molding and casting operations.

Oil and Grease (O&G)

Any material that is extracted by freon from an acidified sample and that is not volatilized during the analysis, such as hydrocarbons, fatty acids, soaps, fats, waxes, and oils.

Pattern

A form of wood, metal, or other material around which molding material is placed to make a mold for casting metals.

pH

The pH is the negative logarithm of the hydrogen ion activity of a solution. The pH of a solution is an indication of its acidity or alkalinity. Solutions with high pH values are considered acidic; low pH values indicate alkalinity.

Phenolic Resins

Phenol formaldehyde resins - A group of varied and versatile synthetic resins. They are made by reacting almost any phenolic and an aldehyde. In some cases, hexamethylenetetramine is added to increase the aldehyde content. Both types of materials are used separately or in combination in the blending of commercial molding materials. Due to the thermal degradation of phenolic resins that may occur during metal pouring, phenol and formaldehyde may be generated.

Pitch Binders

Thermosetting binders used in core making. Baking of the sand-binder mixture is required for evaporation-oxidation and polymerization to take place.

Pollutant Parameters

Those constituents of wastewater determined to be detrimental to human health or the environment.

Polymeric Flocculant (Polyelectrolyte)

High molecular weight compounds which, due to their charges, aid in particle binding and agglomeration.

Priority Pollutants

Those 129 pollutants included in Table 2 of Committee Print number 95-30 of the "Committee on Public Works and Transportation of the House of Representatives," subject to the Act.

Process Water

Water used in a production process that contacts the product, raw materials, or reagents.

Production Normalizing Parameter (PNP)

The unit of production specified in the regulations used to determine the mass of pollution a production facility may discharge.

PSES

Pretreatment standards (effluent regulations) for existing sources applicable to indirect dischargers.

PSNS

Pretreatment standards (effluent regulations) for new sources applicable to new indirect dischargers.

Publicly Owned Treatment Works (POTW)

A waste treatment facility that is owned by a state or municipality.

Quenching

A process of inducing rapid cooling of a casting from an elevated temperature, usually by sudden immersion in water.

Quenching Oil

Medium to heavy grade mineral oils used in the cooling of metal. Standard weight or grade of oil would be similar to standard SAE 60.

Recycle

Returning treated or untreated wastewater to the production process from which it originated for use as process water.

Recuperator

A steel or refractory chamber used to reclaim heat from waste gases.

Reduction

A reaction in which there is a decrease in valence, or electric charge, resulting from a gain in electrons.

Reuse

The use of treated or untreated process wastewater in a different production process.

Reverberatory Furnaces

Rectangular furnaces in which the fuel is burned above the metal and the heat reflects off the walls and into the metal.

Riser

A reservoir of molten metal connected to the casting to provide additional metal to the casting. Additional metal is required as the result of shrinkage that occurs before and during solidification.

Riser Compounds

Extra strength binders used to reduce the extent of riser erosion. Such materials generally contain lignin, furfuryl alcohol, and phosphoric acid.

Rosins, Natural

(Gum rosin, colophony, pine resin, common rosin) - A resin obtained as a residue from distillation of turpentine oil from crude turpentine. Rosin is primarily an isomeric form of the anhydride of abietic acid. It is one of the more common binders in the foundry industry.

Runner

A channel through which molten metal flows from one receptacle to another. Runner is often used to refer to the portion of the gate assembly that connects the riser with the casting.

Sand Binders

Binder materials are the same as those used in core making. The percentage of binder may vary in core and molds depending on sand strength required, extent of mold distortion from hot metal and the metal surface finish required.

Sand Flowability Additives

A mixture of sand, dicalcium silicate, water and wetting agents. This combination is based on a process of Russian origin which achieves a higher degree of flowability than either the conventional sand mix or those with organic additives.

Scrap

Usually refers to miscellaneous metal used in a charge to make new metal.

Scrubber Liquor

The untreated wastewater stream produced by wet scrubbers cleaning gases produced by metal manufacturing operations.

Seacoal

Finely ground bituminous coal used as an ingredient in molding sands to control the thermal expansion of the mold, and to control the composition of the mold cavity gas during pouring.

Shakeout

The operation of removing castings from the mold. A mechanical unit is used to separate the mold material from the solidified casting.

Shot Blast

A casting cleaning process employing a metal abrasive (grit or shot) propelled by centrifugal or air force.

Slag

A product resulting from the action of a flux on the oxidized non-metallic constituents of molten metals.

Slag Quench

A process of rapidly cooling molten slag to produce a more easily handled solid material. Usually performed by sudden immersion in a water trough or sump.

Snorkel

A pipe through the furnace roof, or an opening in a furnace roof, used to withdraw the furnace atmosphere.

Spray Chamber

A large chamber in a flowing stream where water or liquor sprays are introduced to wet the flowing gas.

Sprue

A vertical channel from the top of the mold used to conduct the molten metal to the mold cavity.

Subcategorization

The process of segmentation of an industry into groups of plants for which uniform effluent limitations can be established.

Supernatant

A liquid or fluid forming a layer above settled solids.

Surface Water

Any visible stream or body of water, natural or manmade. This does not include bodies of water whose sole purpose is wastewater retention or the removal of pollutants, such as holding ponds or lagoons.

Surfactants

Surface active chemicals that tend to lower the surface tension between liquids.

Tapping

The process of removing molten metal from a furnace.

Thermoset Resins

Resins used as binding agents in molding sands. Thermoset resins require the addition of heat in order to solidify and "set" the mold.

Total Dissolved Solids (TDS)

Organic and inorganic molecules and ions that are in true solution in the water or wastewater.

Total Organic Carbon (TOC)

A measure of the organic contaminants in a wastewater. The TOC analysis does not measure as much of the organics as the COD or BOD tests, but is much quicker than these tests.

Total Suspended Solids (TSS)

Solids in suspension in water, wastewater, or treated effluent. Also known as suspended solids.

Tubing Blank

A sample taken by passing one gallon of distilled water through a composite sampling device before initiation of actual wastewater sampling.

Tuyeres

Openings in the shell and refractory lining of a furnace through which air is forced.

Urea Formaldehyde Resins

An important class of thermosetting resins identified as aminoplastics. The parent raw materials (urea and formaldehyde) are united under controlled temperature and pH to form intermediates that are mixed with fillers (cellulose) to produce molding powders for patterns.

Venturi Scrubber

A type of wet dust collector that uses the turbulence developed in a narrowed section of a conduit to promote intermixing of dust-laden gas with water sprayed into the conduit.

Volatile Substances

Materials that are readily vaporizable at relatively low temperatures.

Washing Cooler

A large vessel where a flowing gas stream is subjected to sprays of water or liquor to remove gas-borne dusts and to cool the gas stream by evaporation.

Wet Cap

A mechanical device placed on the top of a furnace stack that forms a curtain from a water stream through which the stack gases must pass.

Wetting Compounds

Materials which reduce the surface tension of solutions, thus allowing uniform contact of solution with the wetted material. Sodium alkylbenzene sulfonates comprise the principal type of surface-active compounds, but there are a number of other compounds used.

Zero Discharger

Any industrial or municipal facility that does not discharge wastewater.

APPENDIX A

TOXIC ORGANIC POLLUTANTS INCLUDED IN TTO DEFINITION FOR EACH PROCESS SEGMENT

APPENDIX A

Aluminum Subcategory

(1) Casting Quench

4. benzene
21. 2,4,6-trichlorophenol
22. para-chloro meta-cresol
23. chloroform (trichloromethane)
34. 2,4-dimethylphenol
39. fluoranthene
44. methylene chloride (dichloromethane)
65. phenol
66. bis(2-ethylhexyl)phthalate
67. butyl benzyl phthalate
84. pyrene
85. tetrachloroethylene
87. trichloroethylene

(2) Die Casting

1. acenaphthene
4. benzene
7. chlorobenzene
11. 1,1,1-trichloroethane
21. 2,4,6-trichlorophenol
22. para-chloro meta-cresol
23. chloroform (trichloromethane)
34. 2,4-dimethylphenol
39. fluoranthene
44. methylene chloride (dichloromethane)
55. naphthalene
65. phenol
66. bis(2-ethylhexyl)phthalate
67. butyl benzyl phthalate
68. di-n-butyl phthalate
70. diethyl phthalate
72. benzo (a)anthracene (1,2-benzanthracene)
73. benzo (a)pyrene (3,4-benzopyrene)
76. chrysene
78. anthracene
80. fluorene
81. phenanthrene
84. pyrene
85. tetrachloroethylene
86. toluene

(3) Dust Collection Scrubber

1. acenaphthene
21. 2,4,6-trichlorophenol
23. chloroform (trichloromethane)
34. 2,4-dimethylphenol
39. fluoranthene
44. methylene chloride (dichloromethane)
65. phenol
66. bis (2-ethylhexyl) phthalate
68. di-n-butyl phthalate
70. diethyl phthalate
73. benzo (a)pyrene (3,4-benzopyrene)
84. pyrene

(4) Investment Casting

11. 1,1,1-trichloroethane
23. chloroform (trichloromethane)
44. methylene chloride (dichloromethane)
66. bis (2-ethylhexyl) phthalate
84. pyrene
85. tetrachloroethylene
87. trichloroethylene

(5) Melting Furnace Scrubber

1. acenaphthene
21. 2,4,6-trichlorophenol
23. chloroform (trichloromethane)
34. 2,4-dimethylphenol
39. fluoranthene
44. methylene chloride (dichloromethane)
65. phenol
66. bis (2-ethylhexyl) phthalate
68. di-n-butyl phthalate
70. diethyl phthalate
73. benzo (a)pyrene (3,4-benzopyrene)
84. pyrene

(6) Mold Cooling

4. benzene
21. 2,4,6-trichlorophenol
22. para-chloro meta-cresol
23. chloroform (trichloromethane)
34. 2,4-dimethylphenol
39. fluoranthene
44. methylene chloride
65. phenol
66. bis(2-ethylhexyl) phthalate
67. butyl benzyl phthalate
84. pyrene
85. tetrachloroethylene
87. trichloroethylene

Copper Subcategory

(1) Casting Quench

23. chloroform (trichloromethane)
64. pentachlorophenol
66. bis(2-ethylhexyl)phthalate
71. dimethyl phthalate

(2) Dust Collection Scrubbers

1. acenaphthene
22. para-chloro meta-cresol
23. chloroform (trichloromethane)
34. 2,4-dimethylphenol
55. naphthalene
58. 4-nitrophenol
64. pentachlorophenol
65. phenol
66. bis(2-ethylhexyl) phthalate
67. butyl benzyl phthalate
68. di-n-butyl phthalate
70. diethyl phthalate
71. dimethyl phthalate
72. benzo(a)anthracene (1,2-benzanthracene)
74. 3,4-benzoflouranthene
75. benzo(k) flouranthene
76. chrysene
77. acenaphthylene
78. anthracene
81. phenanthrene
84. pyrene

(3) Investment Casting

1. acenaphthene
22. para-chloro meta-cresol
23. chloroform (trichloromethane)
34. 2,4-dimethylphenol
55. naphthalene
58. 4-nitrophenol
64. pentachlorophenol
65. phenol
66. bis (2-ethylhexyl)phthalate
67. butyl benzyl phthalate
68. di-n-butyl phthalate
70. diethyl phthalate
71. dimethyl phthalate
72. benzo(a)anthracene (1,2-benzanthracene)
74. 3,4-benzoflouranthene
75. benzo(k) flouranthene
76. chrysene
77. acenaphthylene
78. anthracene
81. phenanthrene
84. pyrene

(4) Melting Furnace Scrubber

1. acenaphthene
22. para-chloro meta-cresol
23. chloroform (trichloromethane)
34. 2,4-dimethylphenol
55. naphthalene
58. 4-nitrophenol
64. pentachlorophenol
65. phenol
66. bis (2-ethylhexyl) phthalate
67. butyl benzyl phthalate
68. di-n-butyl phthalate
70. diethyl phthalate
71. dimethyl phthalate
72. benzo(a)anthracene (1,2-benzanthracene)
74. 3,4-benzoflouranthene
75. benzo(k) flouranthene
76. chrysene
77. acenaphthylene
78. anthracene
81. phenanthrene
84. pyrene

(5) Mold Cooling

23. chloroform (trichloromethane)
64. pentachlorophenol
66. bis(2-ethylhexyl)phthalate
71. dimethyl phthalate

Ferrous Subcategory

(1) Casting Quench

23. chloroform (trichloromethane)
34. 2,4-dimethylphenol

(2) Dust Collection Scrubber

1. acenaphthene
23. chloroform (trichloromethane)
31. 2,4-dichlorophenol
34. 2,4-dimethylphenol
39. fluoranthene
44. methylene chloride (dichloromethane)
55. naphthalene
64. pentachlorophenol
65. phenol
66. bis(2-ethylhexyl)phthalate
67. butyl benzyl phthalate
68. di-n-butyl phthalate
70. diethyl phthalate
71. dimethyl phthalate
72. benzo (a)anthracene (1,2-benzanthracene)
76. chrysene
77. acenaphthylene
78. anthracene
80. fluorene
81. phenanthrene
84. pyrene

(3) Investment Casting

23. chloroform (trichloromethane)
44. methylene chloride (dichloromethane)
66. bis (2-ethylhexyl) phthalate
77. acenaphthylene
84. pyrene

(4) Melting Furnace Scrubber

23. chloroform (trichloromethane)
31. 2,4-dichlorophenol
34. 2,4-dimethylphenol
39. fluoranthene
44. methylene chloride (dichloromethane)
55. naphthalene
65. phenol
66. bis (2-ethylhexyl) phthalate
67. butyl benzyl phthalate
68. di-n-butyl phthalate
72. benzo (a)anthracene (1,2-benzanthracene)
76. chrysene
77. acenaphthylene
78. anthracene
80. fluorene
81. phenanthrene
84. pyrene

(5) Mold Cooling

23. chloroform (trichloromethane)
34. 2,4-dimethylphenol

(6) Slag Quench

34. 2,4-dimethylphenol
71. dimethyl phthalate

(7) Wet Sand Reclamation

1. acenaphthene
34. 2,4-dimethylphenol
39. fluoranthene
44. methylene chloride (dichloromethane)
55. naphthalene
65. phenol
66. bis (2-ethylhexyl) phthalate
68. di-n-butyl phthalate
70. diethyl phthalate
71. dimethyl phthalate
72. benzo(a)anthracene (1,2-benzanthracene)
77. acenaphthylene
84. pyrene

Zinc Subcategory

(1) Casting Quench

21. 2,4,6-trichlorophenol
22. para-chloro meta-cresol
31. 2,4-dichlorophenol
34. 2,4-dimethylphenol
39. fluoranthene
44. methylene chloride (dichloromethane)
65. phenol
66. bis(2-ethylhexyl) phthalate
68. di-n-butyl phthalate
70. diethyl phthalate
85. tetrachloroethylene

(2) Die Casting

1. acenaphthene
21. 2,4,6-trichlorophenol
22. para-chloro meta-cresol
24. 2-chlorophenol
34. 2,4-dimethylphenol
44. methylene chloride (dichloromethane)
55. naphthalene
65. phenol
66. bis (2-ethylhexyl) phthalate
68. di-n-butyl phthalate
70. diethyl phthalate
85. tetrachloroethylene
86. toluene
87. trichloroethylene

(3) Melting Furnace Scrubber

31. 2,4-dichlorophenol
34. 2,4-dimethylphenol
39. fluoranthene
44. methylene chloride (dichloromethane)
55. naphthalene
65. phenol
66. bis(2-ethylhexyl) phthalate
68. di-n-butyl phthalate
85. tetrachloroethylene
86. toluene
87. trichloroethylene

(4) Mold Cooling

21. 2,4,6-trichlorophenol
22. para-chloro meta-cresol
31. 2,4-dichlorophenol
34. 2,4-dimethylphenol
39. fluoranthene
44. methylene chloride (dichloromethane)
65. phenol
66. bis(2-ethylhexyl) phthalate
68. di-n-butyl phthalate
70. diethyl phthalate
85. tetrachloroethylene

APPENDIX B

WATER CHEMISTRY RECYCLE MODEL SENSITIVITY ANALYSES

RECYCLE MODEL SENSITIVITY ANALYSES

A. GENERAL APPROACH

The recycle model described in the March 1984 Recycle Report (see the record at 22.12) was used to evaluate impacts from varying selected parameters to determine whether predicted recycle rates are affected. The attached table summarizes the results from over 400 separate computer trials. In general, most trials were run with varying make-up water qualities. A discussion of the four make-up water qualities follows at the end of the table.

In most cases, any limiting factors which restricted the model's ability to attain high recycle rates were correctable, usually by pH control using hydrochloric acid or caustic soda additions. This control is already built into all cost models utilizing high-rate recycle. Some trials indicated limits based on calcium sulfate or silica scale deposition, but generally such scaling occurred at recycle rates which are higher than those being considered for the individual process segments. Additional computer trials indicated that special controls (i.e., recycle loop side stream treatment) would have to be added to provide for removal of part of the calcium sulfate or silica should it be necessary to achieve recycle rates higher than those being considered. Such controls have not been included in cost models. The possible combinations of partial treatments are too numerous to cover within the scope of this analysis.

The "Uncontrolled" columns in the attached table indicate the recycle rates achieved for each make-up water quality if recycle was attempted without any chemical addition to control pH changes. For any rate less than 100 percent, the limiting factor which first inhibits recycle is shown. The "Scale/Corrosion Control" columns indicate that the model includes pH control to enhance recycle by controlling either calcium carbonate scale or corrosion. Again, if a recycle rate less than 100 percent is listed, a second limiter is identified.

The percent recycle shown in the "Probable Recycle Rate" column for co-treatment systems is the flow-weighted average recycle rate for the individual segments which make up the system. For example, if the model flow for aluminum casting quench is 551 GPD and for mold cooling is 6,290 GPD, and their individual recycle rates are 98 percent and 95 percent, respectively, the calculated recycle rate for the co-treatment system is:

$$\frac{(0.98 \times 551) + (0.95 \times 6{,}290)}{(551 + 6{,}290)} = 95.2 \text{ percent}$$

B. RESULTS OF ANALYSIS

1. SENSITIVITY TO MAKE-UP WATER QUALITY

Over 300 trial runs were made measuring the effect of changes in make-up water quality. Most of the trial runs compared four different make-up water qualities to 29 model and 22 actual plant recycle systems. It must be noted that available make-up water quality data from all sources and across process segments have been combined for analyses of individual process segment recycle rates. However, for model analysis of recycle capability at actual plants, the Agency used either actual plant make-up water quality or average make-up water for the process segments represented at the plant. Of these 51 systems, 31 involved one process segment at a time, while the remaining 20 pertained to central treatment systems.

As shown in the table, make-up water quality was a major influence on the recycle rates only for the uncontrolled systems. Chemical addition for pH control has been included in all models to enable effective recycle. Note that the "Scale/Corrosion Control" columns show relatively minor impact attributable to make-up water quality. At times the pH range for effective control may shift due to varying make-up quality, but it is almost always one full pH unit in width. When the pH is maintained within this band, scale and corrosion can be controlled. As higher rates of recycle are attained through added controls, the corresponding impact of make-up water quality lessens since it becomes a smaller part of the total flow. The most noticeable impact from make-up water quality is that for some segments (e.g., Al-IC; Al-MFS; Cu-DDC; Cu-MC; Fe-UC; etc.), the limiting factor in the uncontrolled mode changes from calcium carbonate to corrosion or vice versa. This shift changes the control chemical to be added from acid to alkali, at some difference in cost. Cost models were developed using chemicals applicable to average make-ups, so plants at either extreme (min or max) may require different costs for substituted chemical controls.

In summary, make-up water quality had some influence on achievable recycle rates, but will not be a major deterrent to attainment of recycle rates considered during development of limitations and standards (referred to here as BPT recycle rates). The addition of chemicals to control scaling and corrosion and thus enhance recycle rates has been corrected for any differences due to make-up quality.

2. SENSITIVITY TO SLUDGE MOISTURE CONTENT

Trials for two plants (15654 and 17289) were run with dewatered sludge solids contents varying between 5 to 20 percent for Plant 15654 and 5 to 50 percent for Plant 17289. The only measurable impact was that the 5 percent solids samples did increase recycle rates by 0.5 percent, probably because the higher moisture content removed more materials which otherwise would inhibit

recycle. All systems achieved the BPT recycle rates, even without chemical additions. The primary significance of these eight trials is to demonstrate that:

a. The solids content of well-dewatered sludges has no measurable impact on ability to recycle.

b. For undewatered sludges at or below 5 percent solids, any impact would be positive (i.e., tend to increase recycle rates). This may explain, at least in part, why some plants in the data base have achieved complete recycle and others have not.

3. SENSITIVITY TO CENTRAL TREATMENT

Combined treatment systems for wastewaters from more than one process were evaluated for their ability to attain recycle rates based on those being considered for single process systems. As in the case of single process systems, virtually all of the more than 126 trials indicated that BPT recycle rates for single processes are attainable by providing pH control through chemical addition to the combined raw wastewaters. Of course, actual installations may find it more cost effective to pretreat, limit or otherwise separately control certain of their wastes prior to mixing. But most commenters on central treatment questioned whether end-of-pipe treated effluents could be recycled at high rates. The model trials indicate that they can. With one exception (Plant 18139), every nonferrous central treatment system yielded a higher recycle rate than the BPT rate, using only simple pH control to achieve that rate. Plant 18139 has only 26 percent of the total flow originating from foundry operations. A high sulfate concentration (342 mg/l) from non-foundry operations proved difficult to handle, and caused $CaSO_4$ deposition at 85 percent recycle. Of course, this still could be high enough to comply with limits when the other 74 percent of non-foundry operations are considered. For ferrous operations, combined treatment will not require control for silica and/or calcium sulfate because recycle rates have been adjusted to account, in part, for these problems. Therefore, achievement of blowdown discharge flow rates would not require side stream treatment for precipitation of silica and calcium sulfate. Thus, the model trials have demonstrated the practicability of high rate recycle, even for central treatment systems.

4. SENSITIVITY TO RECYCLE LOOP TREATMENT EFFICIENCY

Three models were evaluated to determine whether differing levels of treatment within the recycle loop affected the ability to recycle. One set of runs dealt with a hypothetical ferrous foundry with UC, MFS, and SQ segments. The treatment within the loop (settling tank and surface oil skimming only) achieved 94 to 95.5 percent recycle before silica scaling became a problem. If an additional treatment (consisting of clarifier with lime and polymer addition, along with skimming) were installed within the

recycle loop, as would be the case for central treatment plants where wastewater is recycled after the treatment system at the point of discharge, recycle rates increased to 96.5 to 97 percent, exceeding the probable 96 percent recycle rate. This indicates another option available to plants with central treatment. Rather than adding silica or calcium sulfate sidestream treatments, additional process wastewater treatment within the loop can achieve or surpass the BPT recycle rate. Therefore, recycling back to the individual contributing processes after central treatment facilities was shown to be beneficial, but not necessary, to achieving the BPT recycle (and blowdown) rates selected by EPA. Thus, companies could elect to upgrade existing central treatment facilities which treat all process wastewaters prior to recycle, rather than completely replace them with smaller blowdown treatment systems. Moreover, the water chemistry constraints contributed to central treatment recycle systems by the slag quenching process, specifically silica scaling, can be minimized by segregated recycle and treatment of slag quenching process wastewaters.

Recycle model runs for an actual plant (06956) with those same process segments confirmed that treatment by a drag tank or settling tank alone may not achieve a high enough recycle rate, while more effective treatment within the loop will. In this case, the drag tank only reaches 85 percent recycle, while a clarifier (without chemical addition) reached 99 percent. The actual plant treatment system is a lime and settle system. The model indicated that this system could achieve recycle at 100 percent, while the BPT recycle rate (flow-weighted) is only 96.1 percent.

Finally, a nonferrous die caster (Plant 12040) was evaluated in the same manner, and found to achieve 100 percent recycle using pH control chemicals, even for simple inside-the-loop treatment. The BPT recycle rate for die casters is 95 percent. This evaluation of treatment efficiency sensitivity demonstrates that recycle rates may be enhanced by improved primary (e.g., lime and settle) treatment within the recycle loop.

RECYCLE RATE SUMMARY - PROCESS MODEL ANALYSIS

Process Segment(s)	Make-Up Quality	Uncontrolled Ach. Rate %	Uncontrolled Limiter	Scale/Corrosion Control Ach. Rate %	Scale/Corrosion Control Limiter	$SiO_2/CaSO_4$ Control Ach. Rate %	$SiO_2/CaSO_4$ Control Limiter	Probable Recycle Rate (%)
ALUMINUM:								
CQ	Mean	80	CC	100	---	---	---	98
	Min	96	CC	100	---	---	---	98
	Max	0	CC	98	$CaSO_4$	NR	NR	98
DC	Mean	60	CC	100	---	---	---	95
	Min	95	CC	100	---	---	---	95
	Max	0	CC	100	---	---	---	95
UC	Mean	97	CC	100	---	---	---	98
	Min	100	---	---	---	---	---	98
	Max	10	CC	100	---	---	---	98
IC	Mean	70	CORR	85	$CaSO_4$	NR	NR	85
	Min	0	CORR	85	$CaSO_4$	NR	NR	85
	Max	0	CC	85	$CaSO_4$	NR	NR	85
MFS	Mean	85	CC	100	---	---	---	96
	Min	92	CORR	100	---	---	---	96
	Max	0	CC	99.5	SiO_2	NR	NR	96
CQ & DC	Mean	30	CC	100	---	---	---	96.2
	Min	94	CC	100	---	---	---	96.2
	Max	0	CC	99.5	CC	NR	NR	96.2
UC & MC	Mean	60	CC	99	$CaSO_4$	NR	NR	97.6
	Min	85	CC	100	---	---	---	97.6
	Max	0	CC	97.5	$CaSO_4$	---(1)	$CaSO_4$	97.6

RECYCLE RATE SUMMARY - PROCESS MODEL ANALYSIS (Continued)

Process Segment(s)	Make-Up Quality	Uncontrolled Ach. Rate %	Uncontrolled Limiter	Scale/Corrosion Control Ach. Rate %	Scale/Corrosion Control Limiter	$SiO_2/CaSO_4$ Control Ach. Rate %	$SiO_2/CaSO_4$ Control Limiter	Probable Recycle Rate (%)
COPPER:								
DCC	Mean	97.5	CC	100	---	---	---	95
	Min	0	CORR	100	---	---	---	95
	Max	0	CC	100	---	---	---	95
UC	Mean	100	---	---	---	---	---	98
	Min	0	CORR	100.	---	---	---	98
	Max	0	CC	100	---	---	---	98
MC	Mean	93	CC	100	---	---	---	95
	Min	0	CORR	100	---	---	---	95
	Max	0	CC	99.5	$CaSO_4$	NR	NR	95
MAGNESIUM:								
UC	Mean	0	CORR	100	---	---	---	98
	Min	0	CORR	100	---	---	---	98
	Max	0	CC	100	---	---	---	98
GS	Mean	95.5	CC	100	---	---	---	100
	Min	100	---	---	---	---	---	100
	Max	0	CC	100	---	---	---	100
UC & GS	Mean	99.5	CC	100	---	---	---	99
	Min	0	CORR	100	---	---	---	99
	Max	0	CC	100	---	---	---	99

RECYCLE RATE SUMMARY - PROCESS MODEL ANALYSIS (Continued)

Process Segment(s)	Make-Up Quality	Uncontrolled Ach. Rate %	Uncontrolled Limiter	Scale/Corrosion Control Ach. Rate %	Scale/Corrosion Control Limiter	$SiO_2/CaSO_4$ Control Ach. Rate %	$SiO_2/CaSO_4$ Control Limiter	Probable Recycle Rate (%)
ZINC:								
CQ	Mean	30	CC	97.5	SiO_2	---(1)	SiO_2	98
	Min	70	CC	98	SiO_2	NR	NR	98
	Max	0	CC	97	SiO_2	---(1)	SiO_2	98
DC	Mean	60	CC	98	SiO_2	NR	NR	95
	Min	80	CC	98	SiO_2	NR	NR	95
	Max	0	CC	99	SiO_2	NR	NR	95
MFS	Mean	93	CC	100	---	---	---	96
	Min	0	CORR	100	---	---	---	96
	Max	0	CC	99.5	SiO_2	NR	NR	96
CQ & DC	Mean	20	CC	98	SiO_2	NR	NR	97.6
	Min	80	CC	98	SiO_2	NR	NR	97.6
	Max	0	CC	98.5	SiO_2	NR	NR	97.6
FERROUS METALS:								
UC	Mean	50	CC	97.5	SiO_2	98 (10%)	SiO_2	97
	Min	0	CORR	97.5	SiO_2	98 (10%)	SiO_2	97
	Max	0	CC	97	SiO_2	98 (10%)	SiO_2	97
MFS	Mean	65	CC	95	SiO_2	98 (50/20%)	$SiO_2/CaSO_4$	96
	Min	92	CC	95.5	SiO_2	98 (60/10%)	$SiO_2/CaSO_4$	96
	Max	0	CC	93	SiO_2	98 (40/25%)	$SiO_2/CaSO_4$	96
SQ	Mean	92	CC	93	SiO_2	95.5 (30%)	SiO_2	94
	Min	0	CORR	94	SiO_2	95.5 (30%)	SiO_2	94
	Max	0	CC	92	SiO_2	96.0 (30%)	SiO_2	94

RECYCLE RATE SUMMARY - PROCESS MODEL ANALYSIS (Continued)

Process Segment(s)	Make-Up Quality	Uncontrolled Ach. Rate %	Uncontrolled Limiter	Scale/Corrosion Control Ach. Rate %	Scale/Corrosion Control Limiter	$SiO_2/CaSO_4$ Control Ach. Rate %	$SiO_2/CaSO_4$ Control Limiter	Probable Recycle Rate (%)
FERROUS METALS (Cont.):								
WSR	Mean	97	$CaSO_4$	NR	NR	NR	NR	80
	Min	0	CORR	97	$CaSO_4$	NR	NR	80
	Max	0	CC	97.5	$CaSO_4$	NR	NR	80
CQ & MC	Mean	93	CC	100	---	---	---	96.1
	Min	0	CORR	100.	---	---	---	96.1
	Max	0	CC	100	---	---	---	96.1
CQ & UC	Mean	30	CC	97	SiO_2	---(1)	SiO_2	97.1
	Min	70	CC	97.5	SiO_2	NR	NR	97.1
	Max	0	CC	95.5	$CaSO_4$	---(1)	$CaSO_4$	97.1
CQ & SQ	Mean	60	CC	95	SiO_2	NR	NR	94.6
	Min	85	CC	95.5	SiO_2	NR	NR	94.6
	Max	0	CC	94.5	SiO_2	---(1)	SiO_2	94.6
UC & MFS	Mean	60	CC	96	SiO_2	97.5 (40/30%)	$SiO_2/CaSO_4$	96.2
	Min	85	CC	96.5	SiO_2	98.5 (40%)	SiO_2	96.2
	Max	0	CC	95.5	SiO_2	97.5 (20%)	SiO_2	96.2
UC & SQ	Mean	60	CC	95.5	SiO_2	---(1)	SiO_2	96.1
	Min	80	CC	95.5	SiO_2	---(1)	SiO_2	96.1
	Max	0	CC	94	SiO_2	---(1)	SiO_2	96.1
MFS & SQ	Mean	94	SiO_2	NR	NR	---(1)	SiO_2	95.8
	Min	0	CORR	94	SiO_2	---(1)	SiO_2	95.8
	Max	0	CC	92	SiO_2	---(1)	SiO_2	95.8

RECYCLE RATE SUMMARY - PROCESS MODEL ANALYSIS (Continued)

Process Segment(s)	Make-Up Quality	Uncontrolled Ach. Rate %	Uncontrolled Limiter	Scale/Corrosion Control Ach. Rate %	Scale/Corrosion Control Limiter	$SiO_2/CaSO_4$ Control Ach. Rate %	$SiO_2/CaSO_4$ Control Limiter	Probable Recycle Rate (%)
UC, MFS & SQ	Mean	70	CC	95	SiO_2	---(2)	SiO_2	96.0
Simple Trt.	Min	0	CORR	95.5	SiO_2	---(2)	SiO_2	96.0
Inside Loop: ST; SS Only	Max	0	CC	94	SiO_2	---(2)	SiO_2	96.0
US, MFS & SQ	Mean	40	CORR	97	SiO_2	NR	NR	96.0
Complete Trt.	Min	0	CORR	96.5	SiO_2	NR	NR	96.0
Inside Loop: Cl; FLL; FLP; SS	Max	85	CORR	96,5	SiO_2	NR	NR	96.0

USING DATA FROM ACTUAL PLANTS (NOT MODEL PLANTS)

Process Segment(s)	Make-Up Quality	Uncontrolled Ach. Rate %	Uncontrolled Limiter	Scale/Corrosion Control Ach. Rate %	Scale/Corrosion Control Limiter	$SiO_2/CaSO_4$ Control Ach. Rate %	$SiO_2/CaSO_4$ Control Limiter	Probable Recycle Rate (%)
Plant 1:								
Fe-MFS	Actual	0	CC	91	SiO_2	---(1)	SiO_2	96.0
Plant 2:								
Fe-UC	Actual	20	CC	96.5	SiO_2	---(1)	SiO_2	97.0
Plant 3:								
Fe-WSR	Actual	40	CC	96	$CaSO_4$	NR	NR	80.0
Plant 4:								
Fe-UC	Actual	10	CC	96	SiO_2	---(1)	SiO_2	97.0
Plant 5:								
Fe-UC	Actual	0	CC	97.5	SiO_2	NR	NR	97.0
Plant 6:								
Fe-MFS	Actual	50	CC	95	SiO_2	---(1)	SiO_2	96.0
Plant 7:								
Al-DC	Actual	0	CORR	100	---	---	---	95
Plant 04704 Al-IC	Actual	0	CORR	75	$CaSO_4$	---(1)	$CaSO_4$	85

USING DATA FROM ACTUAL PLANTS (NOT MODEL PLANTS) (Continued)

Process Segment(s)	Make-Up Quality	Uncontrolled Ach. Rate %	Uncontrolled Limiter	Scale/Corrosion Control Ach. Rate %	Scale/Corrosion Control Limiter	$SiO_2/CaSO_4$ Control Ach. Rate %	$SiO_2/CaSO_4$ Control Limiter	Probable Recycle Rate (%)
Plant 06809 Cu-CQ & MC	Actual	85	CORR	100	---	---	---	95.2
Plant 06956	Actual	0	CORR	98	SiO_2	NR	NR	96.1
Fe-UC,	Segment	0	CORR	100	---	---	---	96.1
MFS, SQ	Mean	75	CORR	100	---	---	---	96.1
	Min	0	CORR	98	SiO_2	NR	NR	96.1
	Max	75	CC	100	---	---	---	96.1
Basic Trt. SB only	Segment	0	CORR	85	SiO_2	---(1)	SiO_2	96.1
Basic Trt. Cl only	Segment	0	CORR	99	SiO_2	NR	NR	96.1
Actual-Cl, FLL, FLP	Segment	0	CORR	100	---	---	---	96.1
Complete-Add PF	Segment	0	CORR	100	---	---	---	96.1
Plant 07929 Fe-MFS	Actual	0	CORR	100	---	---	---	96
Plant 10308 Al/Zn CQ & DC	Actual	30	CORR	100	---	---	---	96.2
Plant 10837	Actual	65	CC	100	---	---	---	96.9
Fe-CC & UC	Mean	60	CC	99.5	SiO_2	NR	NR	96.9
	Min	70	CC	99	SiO_2	NR	NR	96.9
	Max	0	CC	100	---	---	---	96.9

USING DATA FROM ACTUAL PLANTS (NOT MODEL PLANTS) (Continued)

Process Segment(s)	Make-Up Quality	Uncontrolled Ach. Rate %	Uncontrolled Limiter	Scale/Corrosion Control Ach. Rate %	Scale/Corrosion Control Limiter	$SiO_2/CaSO_4$ Control Ach. Rate %	$SiO_2/CaSO_4$ Control Limiter	Probable Recycle Rate (%)
Plant 12040	Actual	80	CC	100	---	---	---	95
Al/Zn-DC	Segment	75	CC	100	---	---	---	95
Basic Trt. SB only	Segment	0	CORR	100	---	---	---	95
Actual-EB, Ch.Trt, ST	Segment	85	CC	100	---	---	---	95
Advanced-Add PF	Segment	85	CC	100	---	---	---	95
Plant 15520A	Actual	0	CORR	100	---	---	---	96.0
Fe-MFS	Mean	20	CORR	100	---	---	---	96.0
	Min	0	CORR	100	---	---	---	96.0
	Max	65	CORR	100	---	---	---	96.0
Plant 15520B Fe-UC & SQ	Actual	0	CORR	100	---	---	---	96.1
Plant 15654	Actual	99.5	CORR	100	---	---	---	98
Fe-CQ	Segment	99	CORR	100	---	---	---	98
@ 5% Sludge	Segment	99.5	CORR	100	---	---	---	98
Plant 17089 Al/Zn - CQ & DC	Actual	75	CORR	100	---	---	---	96.2

USING DATA FROM ACTUAL PLANTS (NOT MODEL PLANTS) (Continued)

Process Segment(s)	Make-Up Quality	Uncontrolled Ach. Rate %	Uncontrolled Limiter	Scale/Corrosion Control Ach. Rate %	Scale/Corrosion Control Limiter	$SiO_2/CaSO_4$ Control Ach. Rate %	$SiO_2/CaSO_4$ Control Limiter	Probable Recycle Rate (%)
Plant 17289	Actual	98.5	CC	100	---	---	---	97
Fe-UC	Segment	99	CC	100	---	---	---	97
@ 5% Sludge	Segment	99.5	CC	100	---	---	---	97
@15% Sludge	Segment	99	CC	100	---	---	---	97
@25% Sludge	Segment	99	CC	100	---	---	---	97
@35% Sludge	Segment	99	CC	100	---	---	---	97
@50% Sludge	Segment	99	CC	100	---	---	---	97
Plant 18073	Actual	97	SiO_2	NR	NR	NR	NR	96.2
Fe-UC & MFS	Mean	95	SiO_2	NR	NR	---(1)	SiO_2	96.2
	Min	95.5	SiO_2	NR	NR	---(1)	SiO_2	96.2
	Max	0	CC	94	SiO_2	---(1)	SiO_2	96.2
Plant 18139 Al-CQ, DC & MFS	Actual	50	CC	80	$CaSO_4$	---(1,3)	$CaSO_4$	96.1
Plant 20147 Al-DC	Actual	0	CORR	100	---	---	---	95

(1) $SiO_2/CaSO_4$ controls were not evaluated for this test, but may be necessary to achieve probable recycle rate. Refer to ferrous metals models for examples of the rate increases attainable through such additional controls.

(2) In addition to rate increases described in Footnote (1), note the benefits derived from more advanced treatment within the loop (next set of runs below).

(3) 74 percent of the raw wastewater originates from non-foundry operations, some of which contribute heavily to the formation of $CaSO_4$, e.g., sulfuric acid pickle rinses.

KEY TO PROCESS CODES:

CC:	Cast Cleaning
CQ:	Casting Quench
DC:	Die Casting
DL:	Die Lubes
DC:	Dust Collection
GS:	Grinding Scrubbers
IC:	Investment Casting
MFS:	Melting Furnace Scrubbers
MC:	Mold Cooling
SQ:	Slag Quenching
WSR:	Wet Sand Reclamation
DCC:	Direct Chill Casting

KEY TO OTHER CODES:

$CaSO_4$:	Scaling Due to Calcium Sulfate Deposition
CC:	Scaling Due to Calcium Carbonate Deposition
Ch.Trt:	Chemical Treatment to Break Emulsions
Cl:	Clarifier
CORR:	Corrosion
EB:	Emulsion Breaking
FLL:	Flocculation With Lime
FLP:	Flocculation With Polymer
NR:	Not Required. Proposed Reycle Rate is Achieved Without Providing the Additional Control Indicated by This Column.
PF:	Pressure Filtration
SB:	Settling Basin
SiO_2:	Scaling Due to Silica Deposition
SS:	Surface Skimming for Oil Removal
ST:	Settling Tank

( ): Percentages in parentheses indicate that portion of total flow which receives side stream treatment for silica or calcium sulfate removal. If two numbers appear, both controls are used at the percentages indicated.

MAKE-UP WATER CONCENTRATIONS

Parameter	Concentration in mg/l			
	Segment	Mean	Min	Max
Dissolved Solids	Varies	454	20	3,225
Hardness, $CaCO_3$	For	134	5	424
Alkalinity, $CaCO_3$	Each	153	9	436
Silica, as SiO_2	Individual	4.7	0.3	14
Chloride	Process	53	4	615
Calcium, as Ca	Segment	53	2	170
Sulfate, as SO_4		19	4	102
Suspended Solids		--	--	--
pH		8.0	7.2	8.8

Derivations:

Segment - Average of make-up concentrations reported for each segment. Sometimes only one set of analyses was available.

Mean - Overall average of all make-up concentrations reported, independent of segments.

Min - The lowest concentration reported for each parameter.

Max - The highest concentration reported for each parameter.

APPENDIX C

GUIDANCE FOR IMPLEMENTING THE METAL MOLDING AND CASTING CATEGORY REGULATIONS

GUIDANCE FOR IMPLEMENTING THE METAL MOLDING AND CASTING CATEGORY REGULATIONS

Introduction

This appendix is intended to serve as an aid in implementing the Metal Molding and Casting Industry Point Source Category Effluent Limitations Guidelines, Pretreatment Standards and New Source Performance Standards. The Metal Molding and Casting Regulations (40 CFR Part 464) were published on October 30, 1985, in Federal Register Volume 50, page 45212. This document presents the development of permit limitations for several real and hypothetical plants that illustrate by example how the metal molding and casting effluent limitations guidelines and standards are intended to be implemented.

Five permit examples are presented:

Example 1: BPT and BAT limitations for an integrated copper casting and copper forming facility.

Example 2: BAT limitations for an aluminum and zinc die casting facility.

Example 3: BAT/PSES limitations for a gray iron foundry integrated with heavy equipment manufacture.

Example 4: BAT for an investment casting plant with intermittent discharge.

Example 5: PSES for a small malleable iron foundry.

The examples presented here cover a broad range of production scenarios. Special emphasis has been placed on illustrating how permits would be developed for plants with integrated water use patterns. Therefore, the plants presented here do not necessarily represent an average cross section of plants in the category. This approach has been taken because by clarifying how permit allowances would be set for unusual or complicated situations, the development of permits for plants with straightforward operations is also better understood. In developing the examples in this document, EPA has endeavored to include many of the situations and examples raised by industry representatives during public comment opportunities as requiring further clarification.

As discussed in the preamble and technical development document, the final metal molding and casting effluent limitations guidelines and standards are mass-based and adhere to the "building block" concept. Each regulated waste stream in an outfall is assigned a discharge allowance based on some measure of production. The sum of the allowances is the total allowance for the outfall. The examples that follow assume some

familiarity with the "building block" concept, as well as familiarity with the material presented in the final metal molding and casting preamble, regulations, and preceding sections of this Development Document. Alternative mass limitations for unregulated process wastewater streams and dilution streams at direct discharging facilities are established by the NPDES permit authority using best professional judgment (BPJ). Alternative mass limitations for unregulated process wastewater streams and dilution streams at indirect discharging facilities are established by the Control Authority (see 40 CFR §403.12(a), and 40 CFR §403.3) by using the combined waste stream formula (see 40 CFR §403.6(e)(i), (ii)).

The following references are recommended to complement this document:

1) "Guidance Manual for the Use of Production-Based Pretreatment Standards and the Combined Wastestream Formula," Environmental Protection Agency Permits Division and Industrial Technology Division, Washington, D.C., September 1985.

2) "Guidance Manual for Implementing Total Toxic Organics (TTO) Pretreatment Standards," "Environmental Protection Agency Permits Division, Washington, D.C., September, 1985.

3) "Guidance Manual for Electroplating and Metal Finishing Pretreatment Standards," Environmental Protection Agency, Effluent Guidelines Division and Permits Division, Washington, D.C., February, 1984.

Calculation of Average Production

Most of the mass limitations for waste streams regulated under the metal molding and casting category are based on some mass of production. Mass limitations for casting cleaning, casting quench, direct chill casting, die casting, investment casting, mold cooling, and slag quench wastewater are based on the mass of metal poured. The limitations for wet sand reclamation are based on the mass of sand reclaimed. The only limitations not based on a mass of production are limitations for scrubber wastewater, which are based on the volume of air scrubbed.

As the mass of production forms a critical foundation for the calculation of the metal molding and casting limitations and standards, it is essential that a permitted facility's actual average production be determined accurately, based upon information supplied by the permittee. As noted at 40 CFR §122.45(b)(2)(i), production for direct dischargers must be based on "a reasonable measure of actual production of the facility," not on design maximum production capacity of the facility. An equivalent measure of production must be used for indirect dischargers.

The ideal situation for the application of effluent limitations guidelines is where production is constant from day to day and month to month. Production for the purposes of calculating the limitation would then be the average production rate. In practice, production rates are not as constant as the ideal situation. They vary because of market factors, maintenance, product changes, down times, breakdowns, and facility modifications. The production rate of a facility will vary with time, and thus determination of production may be problematical.

To apply effluent limitation guidelines to a facility which has varying production rates, the permit writer should determine a single estimate of the long-term average production rate that is expected to exist during the next term of the permit. This single production value is then multiplied by both the daily maximum and monthly average guideline limitations to obtain permit limits.

The permit writer should avoid the use of a limited amount of production data in estimating the production for a specific facility. For example, the data from a particular month may be unusually high and thus lead to the derivation of an effluent limitation which is not actually reflective of the normal plant operations and allow unwarranted levels of discharge.

The objective in determining a production estimate for a facility is to develop a single estimate of the long-term average production rate (in terms of mass of product per day) which can reasonably be expected to prevail during the next term of the permit. The following example illustrates the proper application of guidelines:

> Example: Company X has produced 331,500 tons, 301,500 tons, and 361,500 tons per year for the previous three years. The use of the long-term average production (331,500 tons per year) would be an appropriate and reasonable measure of production, if this figure was most representative of the actual production expected to occur over the next term of the permit and this number did not represent a temporary increase in production. Also, in evaluating these gross production figures, the number of production days must be considered. If the number of production days per year is not comparable, the numbers must be converted to production per day before they may be compared. To convert from the annual production rate to average daily rate, the annual production rate is divided by the number of production days per year. To determine the number of production days, the total number of normally scheduled non-production days are subtracted from the total days in a year. If Company X normally has 255 production days per year, the annual production rate of 331,500 tons per year would yield an average daily rate of 1,300 tons per day.

In the example above, long-term average production over the last three years was used as the estimate of production. This

estimate is appropriate when production is not expected to change significantly during the permit term. However, if historical trends, market forces, or company plans indicate that a different level of production will prevail during the permit term, a different basis for estimating production should be used.

Alternate Limits (Tiered Permits)

If production rates are expected to change significantly during the life of the permit, the permit can i[illegible]e alternate limits. These alternate limits would become eff[illegible] when production exceeds a threshold value, such as during [illegible]duction variations with the business cycle. Definitive gui[illegible]e is not available with respect to the threshold value which should "trigger" alternate limits. However, it is generally agreed that a 10 [illegible] 20 percent fluctuation in production is within the range o[illegible] normal variability, while changes in production substantiall[illegible] higher than this range (such as 50 percent) could warrant consideration of alternate limits. The major characteristics of alternate limits are best described by illustration and example:

> Example: Plant Y has produced 400,000 tons, 375,000 tons, 280,000 tons, 240,000 tons, and 260,000 tons per year for the past five years. Plant capacity is 500,000 tons per year; the plant operates 250 days per year. [illegible] this case, production was reduced during a down-turn i[illegible] the market place and is now on the increase. How[illegible]r, annual production levels may not return to the 400,000 ton level for several more years. In this situation a tiered permit might be advisable. A permit might be written with two or three tiers which apply to ranges of production. If average production is expected to vary between 40 and 100 percent of capacity, alternate permit limits might be set as follows:
>
> First Tier: Basis of limitation calculation = 50 percent of capacity, or 1,000 tons/day.
>
> Applicable production range = 40 percent to 60 percent of capacity, or 800 to 1,200 tons/day.
>
> Second Tier: Basis of limitation calculation = 70 percent of capacity, or 1,400 tons/day.
>
> Applicable production range = 61 percent to 80 percent of capacity, or 1,200+ to 1,600 tons/day.
>
> Third Tier: Basis of limitation calculation = 90 percent capacity, or 1,800 tons/day.
>
> Applicable production range = 81 percent to 100 percent of capacity, or 1,600+ to 2,000 tons/day.

In the above example, the first tier has an applicable production range that covers plus or minus 20 percent of the basis of the calculation for that tier. This can be seen by noting that the basis of calculation for the first tier is 1,000 tons/day and the threshold level that would trigger the next tier is set at 1,200 tons/day, or 20 percent higher. Similarly, the second and third tiers have applicable production ranges of ±14 percent and +11 percent, respectively. This is consistent with the general rule that a 10 to 20 percent change in average production rate is within the range of normal variability while a greater change could warrant alternate limits.

Tiered permits generally require increased technical and administrative supervision on the part of the NPDES permit authority or the pretreatment Control Authority to verify compliance with permit limits. Special reporting requirements are usually necessary and should be detailed in the permit. The permit should specify one set of alternate limits as the primary limits. The primary limits would be based on the actual or recent historical level of production. Compliance should be evaluated based on the primary limits unless notification was received in advance that the production rate had changed. Compliance reports submitted by the permittee should contain measurements or estimates of the actual production rate which prevailed during the reporting period and the anticipated production rate for the next reporting period. Tiered permits should not apply for periods of less than one month.

Intermittent Discharge

Limitations and standards presented at proposal and in the two notices of availability assumed that discharges from metal molding and casting plants would always be on a continuous basis. Information submitted in comments and confirmed by EPA indicate that treatment is done or can be done on a batch basis with discharge on an intermittent basis. For example, many smaller plants with high rate recycle will have very small volumes of blowdown wastewater to be treated. Also, this may include larger plants which have very large treatment lagoons that can store many days of treated wastewater. It is not uncommon in such cases that controlled discharge is prescribed by the local permit authority usually to coincide with periods of higher than average flow in the receiving stream. Moreover, production schedules at some plants may be sufficiently sporadic that discharges may not occur for extended periods (e.g., three to four days in a week).

To allow these practices to continue, the final regulations contain provisions that would allow metal molding and casting plants to discharge on an intermittent basis provided that they comply with annual average limitations or standards that are equivalent to the effluent limitations and standards applicable to continuous discharging plants. Plants are eligible for the annual average limitations and standards where wastewaters are stored for periods in excess of 24 hours to be treated on a batch basis. NPDES permits established for these "noncontinuous"

discharging plants must contain concentration-based maximum day and maximum for monthly average limitations or standards that are equivalent to the mass-based limitations or standards established for continuous discharging plants.

Municipal authorities may also elect to allow noncontinuous discharge to POTWs. They may do so by establishing concentration-based pretreatment standards equivalent to the mass-based standards provided in §484.15, 484.16, 484.25, 484.26, 484.35, 484.36, 484.45 and 484.46 of the regulations. Equivalent concentration standards may be established by multiplying the mass standards included in the regulations by an appropriate measurement of average production, raw material usage, or air flow (kkg of metal poured, kkg of sand reclaimed, or standard cubic meters of air scrubbed) and dividing by an appropriate measure of average discharge flow to the POTW, taking into account the proper conversion factors to ensure that the units (mg/l) are correct. Permit example 4 covers an example of intermittent discharge.

Applicability of the Metal Molding and Casting Effluent Limitations Guidelines and Standards

Metal casting is a metal industry process that can either be a stand alone process, or integrated with either metal manufacturing, metal forming, or metal finishing operations.

Metal Molding and Casting Collocated With Metal Manufacturing

When aluminum, copper*, ferrous, or zinc alloys are cast on-site in conjunction with a metal manufacturing process, such as the casting of ingots or pigs, wastewater generated during the metal manufacturing and casting processes is regulated under the following point source categories:

Aluminum - Nonferrous metals manufacturing, 40 CFR Part 421
Copper - Nonferrous metals manufacturing, 40 CFR Part 421
Ferrous - Iron and steel, 40 CFR Part 420
Zinc - Nonferrous metals manufacturing, 40 CFR Part 421

Copper continuous rod casting (propierzy casting) associated with copper manufacturing is not regulated under nonferrous metals manufacturing or metal molding and casting.

Metal Molding and Casting Collocated With Metal Forming

When aluminum, ferrous, or zinc alloys are cast on-site as part of a metal forming process, such as the casting of billets or strip for rolling or forming, wastewater generated during the casting and forming processes is regulated under the following point source categories:

Aluminum - Aluminum forming, 40 CFR Part 467
Ferrous - Iron and steel, 40 CFR Part 420
Zinc - Nonferrous metals forming, 40 CFR Part 471

When copper alloys* are cast on-site as part of a copper forming process, wastewater generated during the casting process is regulated under the metal molding and casting point source category; wastewater generated during forming processes is still regulated under the copper forming point source category.

Metal Molding and Casting Collocated With Metal Finishing

The metal molding and casting effluent limitations guidelines and standards cover the following wastewaters generated by finishing operations:

Aluminum casting cleaning wastewater
Aluminum grinding scrubber wastewater
Copper grinding scrubber wastewater
Ferrous casting cleaning wastewater
Ferrous grinding scrubber wastewater.

The grinding scrubber wastewater covered is generated by wet air pollution control of grinding dusts generated by dry, rough grinding of castings to remove excess metal (not part of precision grinding or machining).

All other metal finishing operations (except metallic platemaking and gravure cylinder preparation within printing and publishing facilities, and existing indirect discharging job shops and independent printed circuit board manufacturers covered under 40 CFR Part 413) are regulated either under the metal finishing point source category, 40 CFR Part 433, or are unregulated waste streams (see preamble for electroplating and metal finishing point source categories, 48 FR 32462, July 15, 1983 for specific definition of coverage).

---

*Except copper alloys that contain 0.1 percent or more beryllium or 30 percent or more precious metal.

Example 1 - BPT and BAT for Copper Casting and Forming Plant

This example is included to be illustrative of instances where plants have sufficient treatment in place to achieve BPT limitations, but must upgrade recycle and/or end-of-pipe treatment in order to achieve BAT. In these or similar instances, a short-term or interim BPT permit may be appropriate. BAT limitations may be incorporated in the permit with a later compliance date and a schedule for compliance set out in an Administrative Order, or a new permit reissued at a later date. Plant A is an integrated copper casting and copper forming facility with direct discharge. Process wastewater from direct chill casting and permanent mold casting operations are combined with process wastewater from a copper forming hot mill in a centralized recycle system. A continuous discharge from the recycle system is treated before being released directly to a river. A block diagram of the wastewater flows from Plant A is provided in Figure C-1.

Average casting production is 164 tons of metal poured per shift, three shifts per day. Of this total, 96 percent is cast by direct chill methods, while the remaining 4 percent is cast in permanent molds. Direct chill casting process wastewater, defined in Section IV of the development document as contact cooling water used during direct chill casting operations, is generated. In addition, mold cooling process wastewater is generated during permanent mold (bookmold) casting, where contact cooling water is employed. The discharge allowance for the operations that contribute to this combined outfall will consist of building block allowances for the direct chill casting and mold cooling wastewater developed from the metal molding and casting regulation, 40 CFR Part 464; and a building block allowance for the hot mill operations developed from the copper forming regulation, 40 CFR Part 468.

The BPT mass discharge limitations for the metal molding and casting operations would be calculated as follows:

> Total average daily production: 164 tons/shift x 3 shifts/day = 492 tons/day

The BPT mass discharge limitations for the copper subcategory appear at 40 CFR §464.22(a)-(g) (50 FR 45254). Those limitations are in terms of pounds of pollutant per million pounds of metal poured. Converting the units of the above production values results in 0.984 million lbs/day for direct chill casting production and for mold cooling production. The copper forming operations at this facility are generated by contact cooling waters from hot mill roll cooling and hot mill strip cooling. These wastewaters are regulated as hot rolling spent lubricant. The BPT mass limitations for this operation appear at 40 CFR §468.11(a). The BPT mass limitations are based on 990,000 off-lbs per day rolled in the hot mill. Note that chromium and nickel are not regulated in metal molding and casting, but are regulated in copper forming. For the purpose of this example it

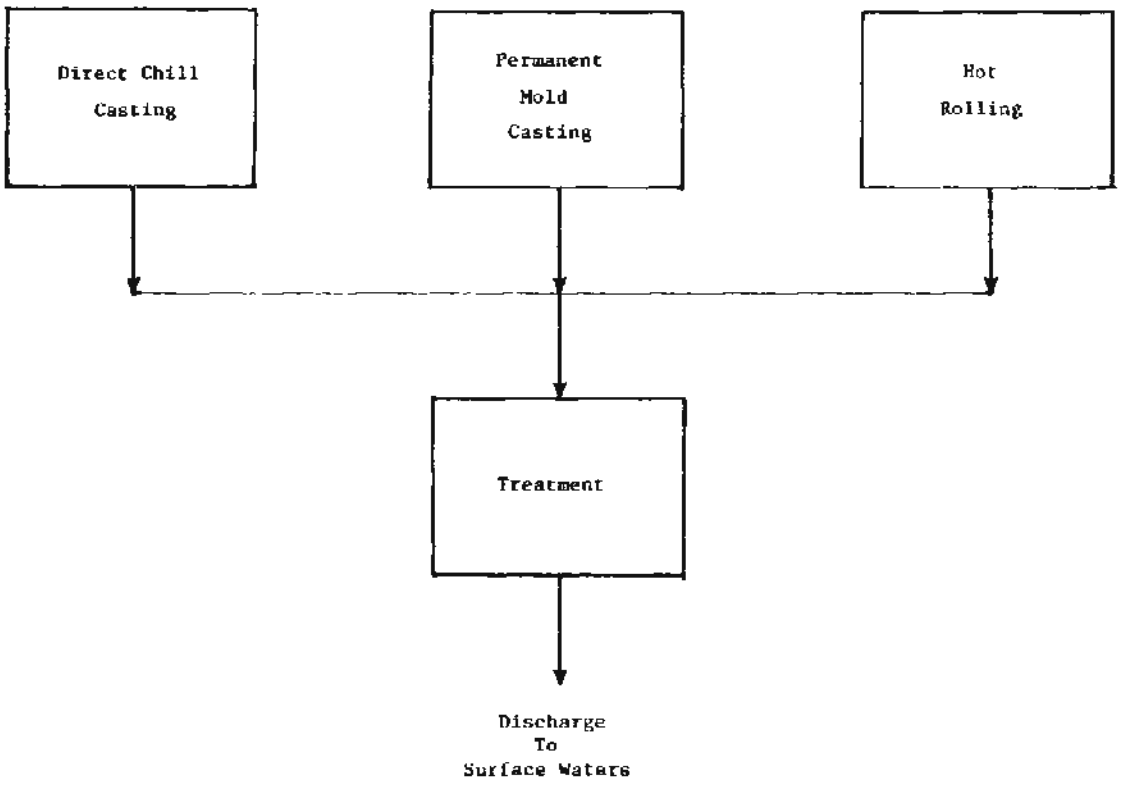

Figure C-1

BLOCK DIAGRAM OF EXAMPLE 1 - INTEGRATED COPPER CASTING AND FORMING PLANT

will be assumed that the NPDES authority has requested and obtained from Plant A analytical data for samples of wastewater from the metal molding and casting processes, and that the data indicate treatable concentrations of chromium and nickel are present. Mass limitations are calculated using metal molding and casting blowdown flows (Appendix J, preamble to final regulations) and copper forming lime and settle treatment effectiveness concentrations (see Table VII-20 of copper forming Development Document). The maximum monthly average BPT mass limitations for the metal molding and casting and copper forming operations at Plant A are presented in Table C-1. Maximum limitations for any one day would be calculated in a similar manner.

BAT effluent limitations are calculated in the same manner and are presented in Table C-2. Note that for BAT only chromium, copper, lead, nickel, and zinc are regulated. TSS and oil and grease will be regulated under BCT which will not be promulgated until a later date for both the metal molding and casting and copper forming categories.

Plant A is an actual plant that has BPT level treatment in place. The plant currently discharges the following masses of pollutants in treated wastewater originating from metal molding and casting operations:

Copper:	0.17 lbs/day
Zinc:	0.13 lbs/day
O&G:	0.9 lbs/day
TSS:	3.9 lbs/day

As can be seen, these current discharge levels are well within the BPT and BAT discharge limitations specified by the metal molding and casting regulations. Plant A achieved these low levels of pollutant discharges by high rate recycle and effective use of lime and settle treatment technology.

To protect the identity of Plant A and the confidentiality of production information for that facility, flow and production information used to prepare the above example have been changed from reported quantities.

Example 2 - BAT for Aluminum and Zinc Die Casting Plant

Plant B is a direct discharging die casting facility with an average production rate of 43 tons of metal poured per shift, three shifts per day. Seventy-one percent of the metal poured by weight is aluminum, the remaining 29 percent is zinc. Sources of process wastewater at both the aluminum and zinc die casting operations include a die lube spray, and noncontact mold cooling water that leaks from the die casting equipment into the die casting process area. Die cast parts are ejected from the die casting machines into quench water tanks. In addition to the above sources of process wastewater, the plant operates a dust collection scrubber at 4,800 SCFM to collect dust and fumes

Table C-1

Plant A Maximum for Monthly Average BPT Effluent Limitations

Pollutant	Direct Chill Casting Water	+	Mold Cooling Water	+	Hot Rolling Spent Lubricant	=	Total
Chromium	unregulated	+	unregulated	+	$.99\times10^6 \frac{lbs}{day} \times 0.018 \frac{lbs}{10^6 lbs}$	=	$0.323 \frac{lbs}{day}$*
Copper	$.984\times10^6 \frac{lbs}{day} \times 0.506 \frac{lbs}{10^6 lbs}$	+	$0.984\times10^6 \frac{lbs}{day} \times 0.214 \frac{lbs}{10^6 lbs}$	+	$.99\times10^6 \frac{lbs}{day} \times 0.103 \frac{lbs}{10^6 lbs}$	=	$0.81 \frac{lbs}{day}$
Lead	$.984\times10^6 \frac{lbs}{day} \times 0.47 \frac{lbs}{10^6 lbs}$	+	$0.984\times10^6 \frac{lbs}{day} \times 0.199 \frac{lbs}{10^6 lbs}$	+	$.99\times10^6 \frac{lbs}{day} \times 0.013 \frac{lbs}{10^6 lbs}$	=	$0.671 \frac{lbs}{day}$
Nickel	unregulated	+	unregulated	+	$.99\times10^6 \frac{lbs}{day} \times 0.130 \frac{lbs}{10^6 lbs}$	=	$2.28 \frac{lbs}{day}$*
Zinc	$.984\times10^6 \frac{lbs}{day} \times 0.518 \frac{lbs}{10^6 lbs}$	+	$0.984\times10^6 \frac{lbs}{day} \times 0.219 \frac{lbs}{10^6 lbs}$	+	$.99\times10^6 \frac{lbs}{day} \times 0.062 \frac{lbs}{10^6 lbs}$	=	$0.787 \frac{lbs}{day}$
O&G	$.984\times10^6 \frac{lbs}{day} \times 12.1 \frac{lbs}{10^6 lbs}$	+	$0.984\times10^6 \frac{lbs}{day} \times 5.09 \frac{lbs}{10^6 lbs}$	+	$.99\times10^6 \frac{lbs}{day} \times 1.236 \frac{lbs}{10^6 lbs}$	=	$18.1 \frac{lbs}{day}$
TSS	$.984\times10^6 \frac{lbs}{day} \times 18.1 \frac{lbs}{10^6 lbs}$	+	$0.984\times10^6 \frac{lbs}{day} \times 7.63 \frac{lbs}{10^6 lbs}$	+	$.99\times10^6 \frac{lbs}{day} \times 2.008 \frac{lbs}{10^6 lbs}$	=	$27.3 \frac{lbs}{day}$

---

*Suggested method of calculating Chromium and Nickel allowances for Direct Chill Casting and Mold Cooling Water

Chromium:

$$\left[.984\times10^6 \frac{lbs}{day} \times 145 \frac{gallons^{(1)}}{1000\ lbs} + 0.984\times10^6 \frac{lbs}{day} \times 61.3 \frac{gallons^{(1)}}{1000\ lbs}\right] \times \left[\frac{1000 \times 1000\ lbs}{10^6\ lbs}\right] \times 3.785 \frac{liters}{gallon}$$

$$\times\ .18\ mg/l^{(2)} \times \frac{1\ lb}{454{,}000\ mg} = .305\ lbs/day$$

Table C-1 (Continued)

Nickel:

$$\left[0.984 \times 10^6 \frac{\text{lbs}}{\text{day}} \times 145 \frac{\text{gallons}^{(1)}}{1000 \text{ lbs}} + 0.984\ 10^6 \frac{\text{lbs}}{\text{day}} \times 61.3 \frac{\text{gallons}^{(1)}}{1000 \text{ lbs}} \right] \times \left[1000 \times \frac{1000 \text{ lbs}}{10^6 \text{ lbs}} \right] \times 3.785 \frac{\text{liters}}{\text{gallon}}$$

$$\times 1.27 \text{ mg/l}^{(2)} \times \frac{1 \text{ lb}}{454{,}000 \text{ mg}} = 2.15 \text{ lbs/day}$$

(1) See Appendix J of preamble to final regulations for the metal molding and casting category

(2) Lime and settle treatment effectiveness values for chromium and nickel (ten day) from Table VII-20 of Copper Forming Development Document

Table C-2

Plant A Maximum for Monthly Average BAT Effluent Limitations

Pollutant +	Direct Chill Casting Water	+	Mold Cooling Water	+	Hot Rolling Spent Lubricant	=	Total
Chromium	unregulated	+	unregulated	+	$.99\times10^6 \frac{lbs}{day} \times 0.018 \frac{lbs}{10^6 lbs}$	=	$0.272 \frac{lbs}{day}$*
Copper	$0.984\times10^6 \frac{lbs}{day} \times 0.506 \frac{lbs}{10^6 lbs}$	+	$0.984\times10^6 \frac{lbs}{day} \times 0.214 \frac{lbs}{10^6 lbs}$	+	$.99\times10^6 \frac{lbs}{day} \times 0.103 \frac{lbs}{10^6 lbs}$	=	$0.81 \frac{lbs}{day}$
Lead	$.984\times10^6 \frac{lbs}{day} \times .314 \frac{lbs}{10^6 lbs}$	+	$0.984\times10^6 \frac{lbs}{day} \times 0.132 \frac{lbs}{10^6 lbs}$	+	$.99\times10^6 \frac{lbs}{day} \times 0.013 \frac{lbs}{10^6 lbs}$	=	$0.452 \frac{lbs}{day}$
Nickel	unregulated	+	unregulated	+	$.99\times10^6 \frac{lbs}{day} \times 0.130 \frac{lbs}{10^6 lbs}$	=	$0.755 \frac{lbs}{day}$*
Zinc	$.984\times10^6 \frac{lbs}{day} \times 0.36 \frac{lbs}{10^6 lbs}$	+	$0.984\times10^6 \frac{lbs}{day} \times 0.148 \frac{lbs}{10^6 lbs}$	+	$.99\times10^6 \frac{lbs}{day} \times 0.062 \frac{lbs}{10^6 lbs}$	=	$0.561 \frac{lbs}{day}$

*Suggested method of calculating chromium and nickel effluent limitations for Direct Chill Casting and Mold Cooling water

Chromium:

$$\left[.984\times10^6 \frac{lbs}{day} \times 145 \frac{gallons}{1000\ lbs}^{(1)} + 0.984\times10^6 \frac{lbs}{day} \times 61.3 \frac{gallons}{1000\ lbs}^{(1)}\right] \times \left[\frac{1000 \times 1000\ lbs}{10^6\ lbs}\right] \times 3.785 \frac{liters}{gallon}$$

$$\times .15\ mg/l^{(2)} \times \frac{1\ lb}{454{,}000\ mg} = 0.254\ lbs/day$$

Nickel:

$$\left[0.984\times10^6 \frac{lbs}{day} \times 145 \frac{gallons}{1000\ lbs}^{(1)} + 0.984\ 10^6 \frac{lbs}{day} \times 61.3 \frac{gallons}{1000\ lbs}^{(1)}\right] \times \left[\frac{1000 \times 1000\ lbs}{10^6\ lbs}\right] \times 3.785 \frac{liters}{gallon}$$

$$\times .37\ mg/l^{(2)} \times \frac{1\ lb}{454{,}000\ mg} = 0.626\ lbs/day$$

(1) See Appendix J of preamble to final regulations for the metal molding and casting category

(2) Lime, settle and filter treatment effectiveness value for chromium and nickel (ten day) from Table VII-20 of Copper Forming Development Document

generated during aluminum dross quenching operations. A block diagram of wastewater flows for Plant B is provided in Figure C-2.

BAT effluent limitations for this facility would be based on building block allowances for both the aluminum and zinc die casting processes that generate wastewater. Aluminum die lube spray is regulated as aluminum die casting wastewater (see 40 CFR §464.13(c). The aluminum noncontact mold cooling water that leaks into the process area is regulated as aluminum mold cooling wastewater (see 40 CFR §464.13(h). Process water in the aluminum casting quench tank is regulated as aluminum casting quench wastewater (see 40 CFR §464.13(b). The zinc process wastewaters are regulated similarly (see 40 CFR §464.43(a), (b), (d)). Additionally, the scrubber wastewater that is generated by wet scrubbing of aluminum dross quench dusts and fumes is regulated as aluminum dust collection scrubber wastewater (see 40 CFR §464.13(d). Dust collection wastewater covers a broad range of wastewaters that issue from wet scrubbers operating on dust laden air collected from the foundry, moldmaking, sand handling, and other process areas associated with metal molding and casting operations. Dust collection scrubber wastewater does not include wastewater from scrubbers directly associated with furnace operations or grinding operations.

The discharge mass limitations for the aluminum and zinc die casting and casting quench operations are based on the mass of metal poured that is associated with these operations. In this example, the production rate is 43 tons poured per shift, three shifts per day. Seventy-one percent of this production is aluminum, the remainder is zinc. Distributing this production by metal type and converting to pounds yields 0.183 million pounds aluminum per day and 0.075 million pounds of zinc per day. Multiplying these productions by the appropriate discharge allowance per million pounds of production presented in the regulations as cited above yield building block discharge allowances for the respective waste streams.

The discharge limitations for the noncontact mold cooling water leakage at a maximum could be calculated based on the above productions (0.183 million lbs/day aluminum and 0.075 million lbs/day zinc) multiplied by the respective mold cooling pollutant discharge allowance. However, while the Agency realizes that minor leakage of noncontact mold cooling water may be unavoidable, an allowance calculated in the above way is more appropriate for contact cooling mold cooling water. If mold cooling process water originates from leakage of noncontact cooling water in the molding machine process area, an improvement in regular maintenance and housekeeping procedures should abate or eliminate the leakage.

Permit authorities are advised to work with plant personnel to determine an estimate of leakage after a housekeeping program designed to reduce or eliminate leakage is implemented. As a benchmark, the BAT production normalized discharge flow for

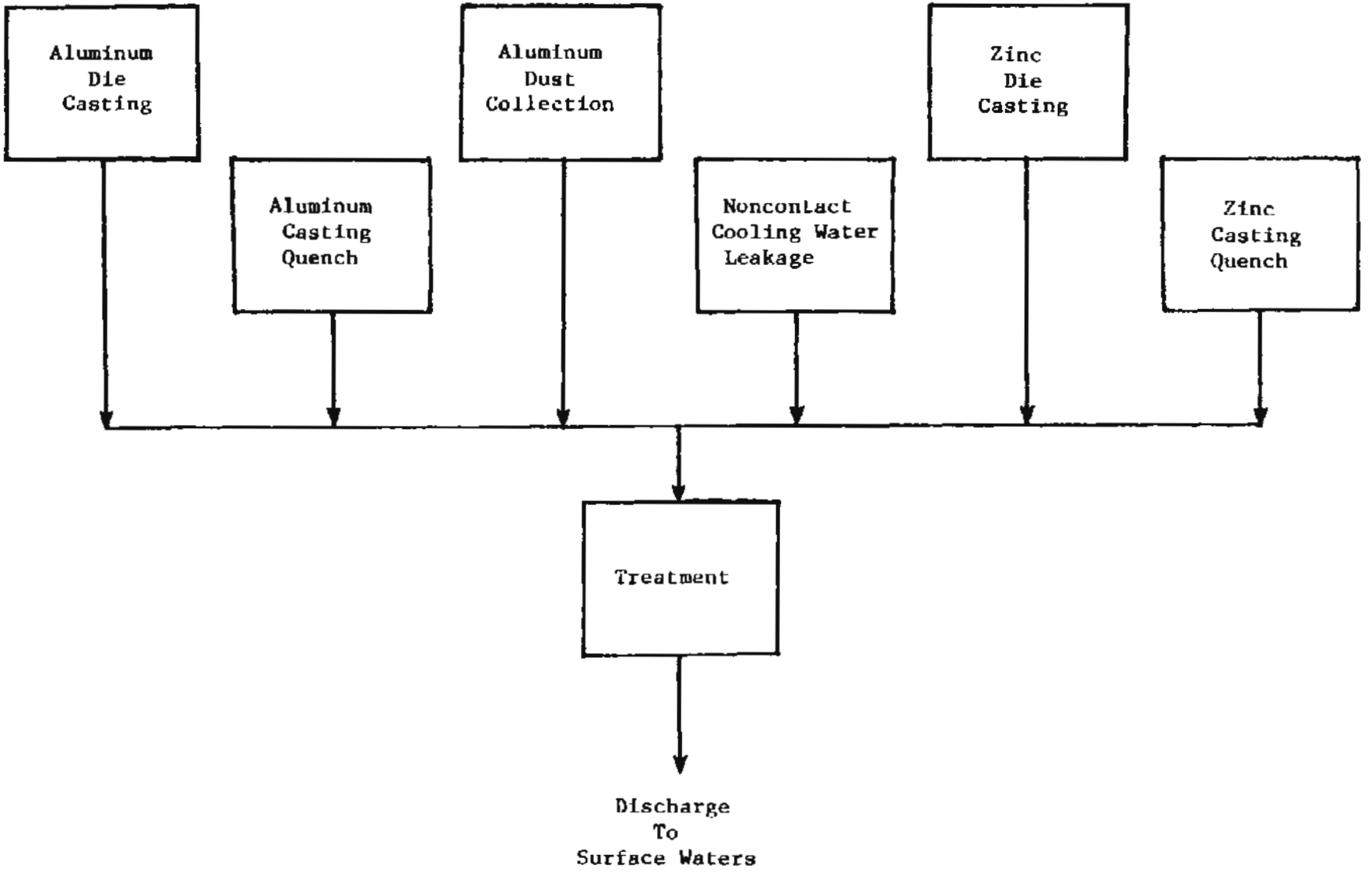

Figure C-2

BLOCK DIAGRAM OF EXAMPLE 2 - ALUMINUM AND ZINC DIE CASTING PLANT

aluminum mold cooling is 92.5 gal/ton, the discharge flow for zinc mold cooling is 94.5 gal/ton (a full list of BAT production normalized discharge flows is presented in Table X-1 of this Development Document). For this example, assume that a thorough review of the extent and nature of leakage of noncontact mold cooling water into the die casting process area at Plant B indicated that the water leakage rate could not be reduced below 30 gallons per ton at both the aluminum and zinc die casting equipment through replacement of leaking seals, valves, and fittings and other normal maintenance efforts. Therefore, an appropriate discharge allowance for the leaking noncontact mold cooling water would be the ratio of the leakage rate over BAT production normalized discharge flow, multiplied by the production rate, and in turn multiplied by the appropriate allowance specified in the regulation. An example calculation follows later in this discussion. In no case should a mass discharge allowance for noncontact mold cooling water leakage be granted that is greater than the straight mold cooling process water allowance calculated by multiplying the production by the mold cooling regulatory allowance.

The discharge limitations for the aluminum dust collection scrubber operation are based on the volume of air scrubbed. The air flow rate through the scrubber of interest is 4,800 SCFM. The scrubber operates three shifts or 24 hours per day. The daily air flow through the scrubber is:

$$4{,}800\ ft^3/min \times 60\ min/hr \times 24\ hrs/day = 0.0069\ billion\ ft^3/day$$

The discharge allowance for this operation is calculated by multiplying the above average daily air flow by the appropriate mass discharge allowance presented in the regulations to determine the aluminum dust collection scrubber building block allowance. Monthly average or maximum monthly average air flow data for scrubbers are generally not available and are not relevant because air flow is constant. Air flow through scrubbers can be calculated from an air flow given in standard cubic feet per minute, which is usually a design flow or other constant operating air flow, multiplied by the minutes per day the scrubber operates. Note that scrubbers do not necessarily operate 24 hours per day. Exhaust blowers and scrubbers are generally run only when dust and fumes are being generated, with some appropriate time allowance for start-up and shutdown. It is recommended that permitting authorities consult with plant personnel to determine a daily time period of scrubber operation, based on plant-specific production schedules and scrubber configurations.

The following is an example calculation of the BAT maximum monthly average lead limitations for Plant B. Limitations for the other regulated pollutants would be calculated in a similar manner. (See 40 CFR §464.13(b), (c), (h) [50 FR 45250] and 40 CFR §464.43(a), (b), (d) [50 FR 45270]).

Aluminum Casting Quench:

0.183 million lbs/day x 0.0047 lbs/million lbs = 0.00086 lbs/day

Aluminum Die Casting:

0.183 million lbs/day x 0.0034 lbs/million lbs = 0.00062 lbs/day

Aluminum Dust Collection Scrubber:

0.0069 billion SCF/day x 0.117 lbs/billion SCF = 0.00081 lbs/day

Aluminum Mold Cooling:

0.183 million lbs/day x 0.151 lbs/million lbs x 30 gal/ton/92.5 gal/ton = 0.00896 lbs/day

(Ratio of actual leakage flow over BAT production normalized flow. This special step applies to noncontact mold cooling water leakage only.)

Zinc Casting Quench:

0.075 million lbs/day x 0.0116 lbs/million lbs = 0.00087 lbs/day

Zinc Die Casting:

0.075 million lbs/day x 0.0022 lbs/million lbs = 0.00017 lbs/day

Zinc Mold Cooling:

0.075 million lbs/day x 0.103 lbs/million lbs x 30 gal/ton/94.5 gal/ton = 0.00245 lbs/day

Total BAT maximum monthly discharge allowance for lead: 0.0147 lbs/day.

Example 3 - BAT/PSES Limitations for Integrated Gray Iron Foundry and Heavy Equipment Manufacturer

Plant C is a large integrated equipment manufacturer that pours 2,500 tons/day gray iron and 200 tons/day steel. The plant operates two shifts per day, five days per week. The gray iron is melted in a cupola; cupola exhaust gases pass through a quencher and a venturi scrubber to remove fumes and particulate. Following the venturi scrubber, the exhaust gas passes through a separator where water introduced in the quencher and the venturi scrubber is removed and recovered. After wet scrubbing and scrubber water recovery, the exhaust gas passes through an aftercooler, where the cleaned gas comes into contact with water

to reduce the exhaust gas temperature and volume and to condense moisture. A block diagram of the wastewater flows from Plant C is presented in Figure C-3.

Slag from the cupola is quenched with water. The molten gray iron is poured in sand molds of various sizes, many with intricate cores that form the inside surfaces of the castings. After the castings cool, the castings are released from the molds during sand shake-out. Dust from automatic mold-making machines, sand shake-out, core making, sand mulling, and other sand handling operations is collected along with transfer ladle and pouring floor fumes in six de-centralized air collection systems. Exhaust air from each of the air collection systems is cleaned by wet scrubbing. Exhaust blowers operate 16 hours per day; the air flow through each scrubber is 40,000 SCFM.

Steel is melted in an electric arc furnace and poured at a rate of 200 tons per day. The steel is cast in permanent molds that are cooled with noncontact cooling water. The steel castings are ejected into quench tanks where further cooling takes place. Noncontact cooling water is used as makeup water for the quench tanks and for other process water make-up needs.

All of the steel castings and one quarter of the gray iron castings proceed to a grinding and machining area where flash, sprues, and runners are cut from the castings, and remaining excess metal is ground off. Air laden with dust generated during these rough finishing operations is collected and cleaned in a wet scrubbing operation. The rough finished workpieces are further machined and milled to final product specifications before being transferred to painting and assembly areas. An oil and water emulsion is used as a contact coolant and lubricant in these final precision tooling operations. Grinding dust and machining waste (metal particles in oily solution) that falls to the floor is washed with water to a grinding room sump.

The total wastewater flow from these operations flows to a central wastewater treatment facility with a single discharge. The flow to treatment consists of:

1. Continuous blowdown discharge from the cupola quencher and venturi scrubber water recycle system.

2. Continuous blowdown discharge from the cupola aftercooler recycle system.

3. Batch discharge from dust collection scrubber recycle system drag tanks.

4. Continuous discharge of slag quench water.

5. Batch dumps of casting quench tanks.

6. Excess noncontact mold cooling water not used as makeup to the quench tanks and other processes.

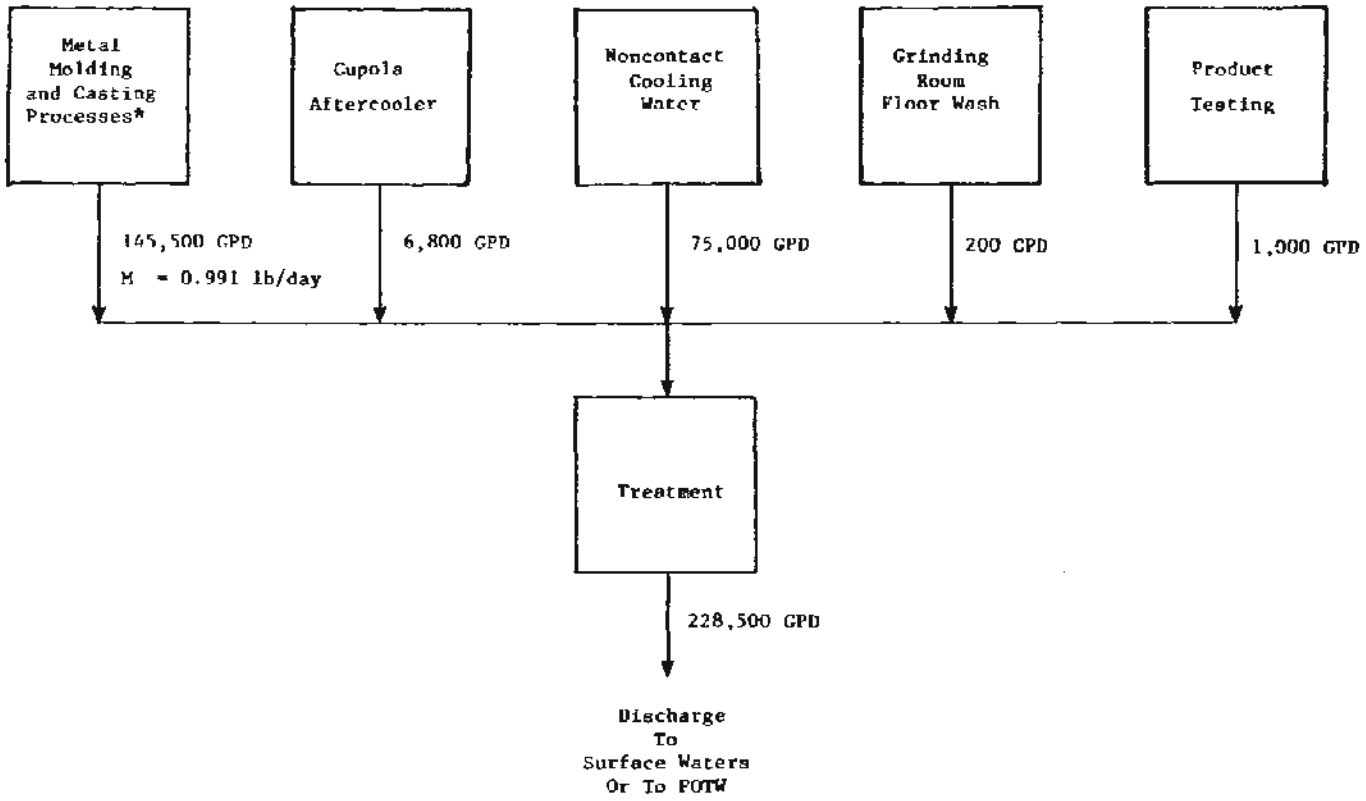

*Quencher, Venturi Scrubber, Dust Collection, Slag Quench, Casting Quench, Grinding Scrubber

Figure C-3

COMBINED WASTESTREAMS FOR EXAMPLE 3 - INTEGRATED GRAY IRON FOUNDRY AND HEAVY EQUIPMENT MANUFACTURER

7. Continuous discharge of grinding scrubber wastewater.

8. Grinding room floor wash water.

9. Foundry product testing laboratory wastewater.

A BAT permit for this outfall or PSES for an equivalent discharge to a POTW sewer would consist of the following allowances:

1. A separate melting furnace scrubber mass allowance (see 40 CFR §464.33(f)(1), and §464.35(f)(1)) for the cupola exhaust gas quencher and for the venturi scrubber. This plant has a multiple scrubber configuration that does occur in the ferrous subcategory. One mass allowance should be given for the quencher and a second mass allowance should be given for the venturi, as each is a discrete wet scrubbing device. (See 40 CFR §464.31(h)(i).) The mass allowance for each should be based upon the daily air flow through the scrubber. Daily air flow is calculated from the typical scrubber air flow in SCFM (a constant rate, usually equal to or close to the design rate) multiplied by the minutes per day the scrubber operates. If a cupola is not operated continuously, but goes through a daily start-up and shut down cycle, cupola scrubbers generally operate from the time the cupola fuel bed is lighted until the cupola bottom has been dropped and cooled.

2. Aftercoolers are in service at a limited number of ferrous foundries with cupola melting. They are used to lower exhaust fan power requirements by lowering the temperature and reducing the moisture content of exhaust gases, and thereby reducing the volume of gas going to the exhaust fan. The water systems of aftercoolers and scrubber systems are kept segregated; aftercooler water should be much cleaner than scrubber water. A typical aftercooler configuration is a packed tower where exhaust gas and aftercooler water pass countercurrently. The aftercooler water is collected, run through a cooling tower, and recycled. As aftercooler water only comes into contact with previously cleaned exhaust gas, it should contain a relatively minor pollutant load, if any. If not, poor scrubber performance and possibly excessive air emissions may be occuring. EPA recommends that aftercooler water be sampled and analyzed by the discharger. As the characteristics of aftercooler water are expected to be somewhere between the characteristics of noncontact cooling water and melting furnace scrubber water, a high degree of recycle of aftercooler water should be expected (note that if aftercooler water is not recycled it is more likely to be a dilute waste stream). Viable uses of aftercooler water discharge are as make-up water to slag quench, melting furnace scrubber, or dust collection scrubber system. With sampling data it can be determined whether it should be considered to be dilution water or unregulated process water for the purpose of calculating pretreatment standards for

indirect dischargers (the definition of a dilute waste stream is provided by the May 17, 1984 Federal Register, 49 FR 21024). While aftercooler water is unregulated according to the definition in the General Pretreatment Regulations, Control Authorities have the authority to determine whether unregulated streams should be considered dilution under 40 CFR §403.6(d). The combined wastestream formula would be used to establish the PSES mass allowances. EPA recommends best professional judgment to base a BAT permit allowance on the metal molding and casting treated effluent concentrations presented in Appendix L of the metal molding and casting preamble multiplied by the average blowdown effluent flow from the aftercooler recycle system. In no case should the mass allowance of aftercooler water exceed the mass allowance for a single stage melting furnace scrubber. Moreover, the resulting PSES mass allowances calculated by the combined wastestream formula and BAT mass allowances using the above method should be nearly identical. If there is no discharge there would be no allowance.

3. A dust collection scrubber mass allowance (see 40 CFR §464.33(c)(1), §464.35(c)(1)) should be given for each of the six scrubbers operating on the de-centralized air collection systems.

4. A slag quench mass allowance (see 40 CFR §464.33(h)(1), §464.35(h)(1)) should be given for slag quench wastewater.

5. A casting quench mass allowance (see 40 CFR §464.33(b)(1), §464.35(b)(1)) should be given for casting quench wastewater.

6. Noncontact mold cooling water should be treated as a dilution waste stream for PSES (use combined waste stream formula) and no allowance for BAT should be necessary unless there are unusual, site-specific intake (make-up) water quality circumstances.

7. Grinding scrubber wastewater is a regulated waste stream that is given no discharge allowance (see 40 CFR §464.33(d) and §464.35(d)).

8. Grinding room floor wash water is an unregulated process water stream. The floor area being washed is shared by both dry rough grinding operations with air scrubbers that are covered under metal molding and casting, 40 CFR Part 464, and precision machining, generally covered under metal finishing, (see 40 CFR §433.10), depending on the other finishing operations at the facility. Before giving any mass allowance for floor wash, the permit writer should ensure that good housekeeping techniques such as dry mopping, high pressure/low volume sprays and the elimination of drips, leaks, and spills, have been implemented to the extent possible. To calculate a BAT mass discharge allowance for

these operations, the average floor wash water usage (volume/day) should be determined, and then prorated to the metal molding and casting (rough grinding) and precision machining operations. One method of proration would be to distribute the flow based on the relative area of floor space occupied by each operation. A BAT mass allowance for the flow attributed to metal molding and casting operations should be calculated by multiplying the flow by the metal molding and casting treated effluent concentrations presented in Appendix L of the metal molding and casting preamble, converting units as appropriate. The mass allowance for the flow attributed to the precision machining operations could be calculated based on the metal finishing flow times the metal finishing BAT concentration limitations (see 40 CFR §433.14). In developing PSES mass discharge allowances, the combined wastestream formula is used. If one assumes that the precision machining operations are unregulated (i.e., none of the six operations listed in §433.10 is present at this facility), then only the wastewater flow rate of the unregulated wastestream is needed to use the formula. However, if one assumes that it is regulated metal finishing wastewater, then the standards for metal finishing would be used in the formula to develop a mass allowance.

9. Foundry product testing laboratory wastewater is an unregulated process wastewater flow. This wastewater should be relatively dilute. However, it should be sampled and analyzed. For the purpose of this example, it will be assumed to contain treatable concentrations of toxic metals, TSS, and other pollutants. A BAT mass discharge allowance should be calculated based on the average daily flow from the laboratory multiplied by the metal molding and casting treatment effectiveness concentrations presented in Appendix L of the metal molding and casting preamble. In developing PSES mass discharge allowances, the combined wastestream formula may be used with resulting mass limitations that should be nearly identical.

The following are example calculations of the BAT and PSES maximum for any one day discharge limitation of lead for Plant C.

Plant C Fact Sheet:

2,500 tons gray iron poured per day
200 tons steel poured per day
Total Production - 2700 tons/day

Note: This large plant casts primarily gray iron, and therefore the entire production at the plant is subject to BAT and PSES limitations based on filtration.

Cupola Scrubber:

Air flow: 60,000 SCFM
Period of operation: 18 hours/day (including cupola startup and shutdown)
Wastewater discharge: 50,000 gallons/day

Dust Collection Scrubber:

Air flow: 40,000 SCFM/scrubber x 6 scrubbers
Period of operation: 16 hours/day
Wastewater discharge: 20,000 gallons/day

Grinding Room Data:

500 gallons per day grinding scrubber wastewater discharge
200 gallons per day floor wash water
40 percent floor space dedicated to dry, rough grinding
60 percent floor space dedicated to finish machining

Foundry Product Testing Laboratory:

1000 gallons wastewater/day

Slag Quench:

50,000 gallons wastewater/day

Casting Quench:

25,000 gallons wastewater/day

Aftercooler:

Wastewater sampling and analysis indicates it should be considered unregulated process wastewater; 6,800 gallons/day is discharged.

Noncontact Cooling Water:

75,000 gallons/day discharged to central treatment facility

Calculation of BAT maximum for any one day lead limitations (see 40 CFR §464.33(a)-(i) [50 FR 45261]):

Metal molding and casting, ferrous subcategory, BAT one-day maximum treatment effectiveness concentration: 0.53 mg/l lead

Metal finishing BAT one-day maximum limitations: 0.69 mg/l lead

Melting furnace scrubber (regulated):

Gas quencher:

$$60{,}000 \text{ SCFM} \times 18 \frac{\text{hours}}{\text{day}} \times 60 \frac{\text{minutes}}{\text{hour}} \times \frac{1.86 \text{ lb lead}}{\text{billion SCF}}$$

$$= 0.121 \frac{\text{lb}}{\text{day}} \text{ lead}$$

Venturi scrubber:

$$60{,}000 \text{ SCFM} \times 18 \frac{\text{hours}}{\text{day}} \times 60 \frac{\text{minutes}}{\text{hour}} \times \frac{1.86 \text{ lb lead}}{\text{billion SCF}}$$

$$= 0.121 \frac{\text{lb}}{\text{day}} \text{ lead}$$

Cupola exhaust gas aftercooler (unregulated):

$$6{,}800 \frac{\text{gallons}}{\text{day}} \times 3.785 \frac{\text{liters}}{\text{gallon}} \times 0.53 \frac{\text{mg}}{\text{liter}} \times \frac{1 \text{ lb}}{454{,}000 \text{ mg}}$$

$$= 0.030 \frac{\text{lb}}{\text{day}} \text{ lead}$$

Dust collection scrubber wastewater (regulated):

$$6 \times 40{,}000 \text{ SCFM} \times 16 \frac{\text{hours}}{\text{day}} \times 60 \frac{\text{minutes}}{\text{hour}} \times \frac{0.398 \text{ lb lead}}{\text{billion SCF}}$$

$$= 0.092 \frac{\text{lb}}{\text{day}} \text{ lead}$$

Slag quench wastewater (regulated):

$$2700 \frac{\text{tons}}{\text{day}} \times 2{,}000 \frac{\text{lbs}}{\text{ton}} \times \frac{0.0964 \text{ lb lead}}{\text{million lbs}} = 0.521 \frac{\text{lb}}{\text{day}} \text{ lead}$$

Casting quench wastewater (regulated):

$$2700 \frac{\text{tons}}{\text{day}} \times 2{,}000 \frac{\text{lbs}}{\text{ton}} \times \frac{0.0252 \text{ lb lead}}{\text{million lbs}} = 0.136 \frac{\text{lb}}{\text{day}} \text{ lead}$$

Grinding Scrubber Wastewater (regulated):

No discharge allowance.

Grinding Room Floor Wash Water (unregulated):

Metal Molding and Casting Operations:

$$200 \frac{\text{gallons}}{\text{day}} \times 0.40 \times 3.785 \frac{\text{liters}}{\text{gallon}} \times 0.53 \frac{\text{mg}}{\text{liter}}$$

$$\times \frac{1\ \text{lb}}{454{,}000\ \text{mg}} = 0.00035 \frac{\text{lb}}{\text{day}} \text{ lead}$$

Precision Machining Operation:

$$200 \frac{\text{gallons}}{\text{day}} \times 0.60 \times 3.785 \frac{\text{liters}}{\text{gallon}} \times 0.69 \frac{\text{mg}}{\text{liter}}$$

$$\times \frac{1\ \text{lb}}{454{,}000\ \text{mg}} = 0.00069 \frac{\text{lb}}{\text{day}} \text{ lead}$$

Foundry Product Testing Laboratory Wastewater (unregulated)

$$1000 \frac{\text{gallons}}{\text{day}} \times 3.785 \frac{\text{liters}}{\text{gallon}} \times 0.53 \frac{\text{mg}}{\text{liter}} \times \frac{1\ \text{lb}}{454{,}000\ \text{mg}}$$

$$= 0.0044 \frac{\text{lb}}{\text{day}} \text{ lead}$$

Total BAT maximum for any one day discharge limitation for lead:

$$1.026 \frac{\text{lb}}{\text{day}} \text{ lead}$$

Calculation of PSES maximum for any one day discharge standard for lead:

The following streams are considered regulated wastestreams because effluent limitations and standards (PSES) have been promulgated for them in the metal molding and casting point source category: cupola quencher and venturi scrubber wastewater, dust collection scrubber wastewater, slag quench water, casting quench tank dumps, and grinding scrubber wastewater. It will be assumed for the purposes of these calculations that aftercooler recycle system blowdown has been sampled and anlayzed and was determined to contain treatable levels of toxic pollutants, including lead. Noncontact mold cooling water should be treated as a dilution waste stream. Finally, grinding room floor wash water and foundry product testing laboratory wastewater are unregulated process waste streams.

Mass discharge allowances should be calculated using the combined wastestream formula (CWF):

$$M_T = \sum_{i=1}^{N} Mi \times \left[\frac{F_T - F_D}{Fi}\right] \text{, where}$$

M_T = Alternative mass limit for the pollutant in the combined wastestream (mass per day)

M_i = Production-based categorical pretreatment standard for the pollutant in regulated stream i (or the standard multiplied by the appropriate measure of production if the standards being combined contain different units of measurement)

F_i = Average daily flow (at least 30 day average) of regulated stream i

F_D = Average daily flow (at least 30 day average) of dilute wastestream(s) entering combined treatment system

F_T = Average daily flow (at least 30 day average) through the combined treatment facility (including regulated, unregulated and dilute wastestreams)

N = Total number of regulated streams

Alternative mass limits are developed by adding together the calculated mass values from a production-based categorical standard for a pollutant (M_i) in each regulated process wastestream that is combined. If the production bases for the production-based standards being combined are different, as is true in this case, then each of the production-based standards would have to be multiplied by the appropriate daily production basis for each regulated process, before the standards were added together.

The first step in implementing the combined wastestream formula is to calculate $\sum M_i$, the sum of the mass limits of the regulated waste streams. Mass limits for the regulated waste streams are calculated in the same manner as for BAT:

Melting furnace scrubber (regulated):

Gas quencher:

$$60{,}000 \text{ SCFM} \times 18 \frac{\text{hours}}{\text{day}} \times 60 \frac{\text{minutes}}{\text{hr}} \times \frac{1.86 \text{ lb lead}}{\text{billion SCF}}$$

$$= 0.121 \frac{\text{lb}}{\text{day}} \text{ lead}$$

Venturi scrubber:

$$60{,}000 \text{ SCFM} \times 18 \frac{\text{hours}}{\text{day}} \times 60 \frac{\text{minutes}}{\text{hr}} \times \frac{1.86 \text{ lb lead}}{\text{billion SCF}}$$

$$= 0.121 \frac{\text{lb}}{\text{day}} \text{ lead}$$

Dust collection scrubber (regulated):

$$6 \times 40{,}000 \text{ SCFM} \times 16 \frac{\text{hours}}{\text{day}} \times 60 \frac{\text{minutes}}{\text{hour}} \times \frac{0.398 \text{ lb lead}}{\text{billion SCF}}$$

$$= 0.092 \frac{\text{lb}}{\text{day}} \text{ lead}$$

Slag quench (regulated):

$$2700 \frac{\text{tons}}{\text{day}} \times 2000 \frac{\text{lbs}}{\text{ton}} \times \frac{0.0964 \text{ lb lead}}{\text{million lbs}} = 0.521 \frac{\text{lb}}{\text{day}} \text{ lead}$$

Casting quench (regulated):

$$2700 \frac{\text{tons}}{\text{day}} \times 2000 \frac{\text{lbs}}{\text{ton}} \times \frac{0.0252 \text{ lb lead}}{\text{million lbs}} = 0.136 \frac{\text{lb}}{\text{day}} \text{ lead}$$

Grinding scrubber (regulated):

No discharge allowance

Thus the sum of the mass limits for the regulated wastestreams, is 0.121 lb/day + 0.121 lb/day + 0.092 lb/day + 0.521 lb/day + 0.136 lb/day + 0.0 lb/day = 0.991 lb/day.

The average daily flow through the combined treatment facility, F_T, is the sum of the discharge flows of the regulated, unregulated, and dilute streams (see Plant C Fact Sheet):

Waste Stream	Flow	Type
Cupola quencher & venturi	50,000 GPD	regulated
Cupola aftercooler	6,800 GPD	unregulated
Dust collection scrubber	20,000 GPD	regulated
Slag quench	50,000 GPD	regulated
Casting quench	25,000 GPD	regulated
Noncontact cooling water	75,000 GPD	dilution
Grinding scrubber	500 GPD	regulated
Grinding room floor wash	200 GPD	unregulated
Product testing	1,000 GPD	unregulated
Total flow (F_T)	228,500 GPD	

These flows and mass limits values are illustrated in Figure C-3.

The average daily flow of dilute wastestreams, F_D, is equal to the flow of noncontact cooling water, 75,000 gallons/day. The average daily flow of the regulated wastestreams, F_i is 145,500 gallons/day.

Substituting these values into the combined wastestream formula yields:

$$M_T = 0.991 \frac{lb}{day} \times \left[\frac{228{,}500\ GPD - 75{,}000\ GPD}{145{,}500\ GPD}\right]$$

$$= 1.045 \frac{lb}{day}$$

Thus the maximum for any one day limitation for lead in the combined wastestream is 1.045 lbs per day.

Note that for PSES TTO is also controlled for the melting furnace scrubber, dust collection scrubber, casting quench, and slag quench metal molding and casting operations. See Example 5 for the method used to calculate TTO mass limitations.

Example 4 - BAT for Investment Casting Plant With Intermittent Discharge

Plant D is a small investment casting foundry with direct discharge that pours 3 tons of steel per day, 0.5 tons of gray iron per day, 2 tons of brass per day, and 1 ton of aluminum per day. Wastewater is generated by the following investment casting operations: mold backup, hydroblasting of castings, and dust collection scrubber. Plant D operates one shift per day, three days per week, 50 weeks per year, 150 production days per year. All wastewater generated is collected in a holding tank, treated on a batch basis at the end of the production day, and discharged at the end of the production week. A wastewater flow block diagram for Plant D is provided in Figure C-4.

BAT discharge limitations would be developed for this facility with additive (building block) discharge allowances given for the ferrous investment casting operations (steel and gray iron), the bronze (copper) investment casting operations, and the aluminum investment casting operations. The ferrous investment casting allowance would be based on the effluent limitations for plants that cast primarily steel because steel is the major ferrous alloy cast at Plant D. Investment casting wastewater is defined as wastewater generated during investment mold backup, hydroblast cleaning of investment castings, and the collection of dust resulting from the hydroblasting of castings and the handling of the investment material. Note that the investment casting process definition includes dust collection and therefore separate allowances for dust collection scrubbers are not warranted. An example development of the BAT discharge maximum for any one day limitation for zinc for Plant D follows.

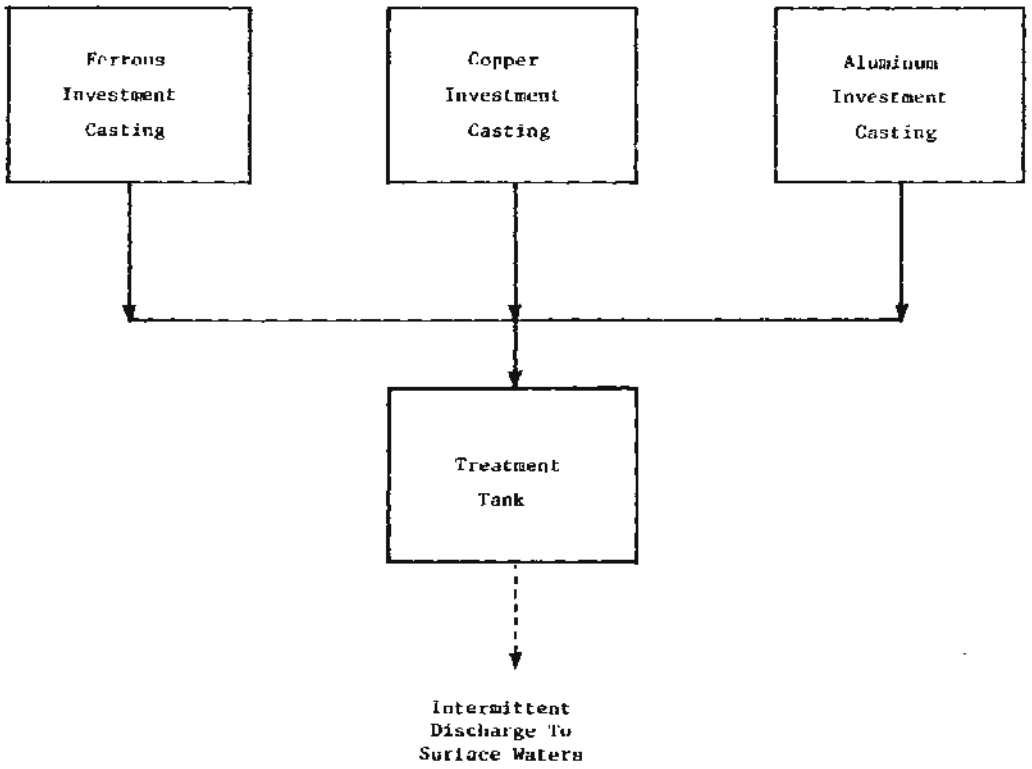

Figure C-4

BLOCK DIAGRAM OF EXAMPLE 4 - INVESTMENT CASTING PLANT

Plant D Fact Sheet:

Ferrous Investment Casting:

3.5 tons/day
525 tons/year
7,200 gallons recycle system blowdown wastewater/day

Copper Investment Casting:

2 tons/day
300 tons/year
5,800 gallons recycle system blowdown wastewater/day

Aluminum Investment Casting:

1 ton/day
150 tons/year
2,600 gallons recycle system blowdown wastewater/day

Plant D operates a central recycle system with drag tank, and a central blowdown treatment system. Plant D also is a noncontinuous discharger (once per week). This plant discharges 46,800 gallons of batch (lime and settle) treated wastewater from a small one-quarter acre storage pond once per week. Therefore, annual average mass limitations and maximum day and maximum for monthly average concentration limitations are applicable. These BAT limitations are found in the regulations as follows: ferrous (primarily steel) investment casting at 40 CFR §464.33(e)(2) [second table]; brass (copper) investment casting at 40 CFR §464.23(e) [second table]; and aluminum investment casting at 40 CFR §464.13(f) [second table].

Zinc maximum concentration for any one day:

Ferrous Investment Casting (production of steel plus gray iron):

$$X = 7{,}200 \frac{\text{gallons}}{\text{day}} \times \frac{1 \text{ day}}{3.5 \text{ tons}} \times \frac{1 \text{ ton}}{2(1{,}000 \text{ lbs})}$$

$$= 1{,}029 \frac{\text{gallons}}{1{,}000 \text{ lbs}}$$

$$1.47 \frac{\text{mg}}{\text{l}} \times \frac{1{,}320}{1{,}029} = 1.89 \frac{\text{mg}}{\text{l}}$$

The above ratio of water use (1,320/X) is obtained from the footnote to the table of limitations, and X in the ratio is the actual normalized blowdown flow for ferrous subcategory production at this plant.

Copper Investment Casting:

$$X = 5{,}800 \frac{\text{gallons}}{\text{day}} \times \frac{1 \text{ day}}{2 \text{ tons}} \times \frac{1 \text{ ton}}{2\ (1{,}000 \text{ lbs})}$$

$$= 1{,}450 \frac{\text{gallons}}{1{,}000 \text{ lbs}}$$

$$0.76 \frac{\text{mg}}{1} \times \frac{1{,}320}{1{,}450} = 0.69 \frac{\text{mg}}{1}$$

Aluminum Investment Casting:

$$X = 2{,}600 \frac{\text{gallons}}{\text{day}} \times \frac{1 \text{ day}}{1 \text{ ton}} \times \frac{1 \text{ ton}}{2\ (1{,}000 \text{ lbs})}$$

$$= 1{,}300 \frac{\text{gallons}}{1{,}000 \text{ lbs}}$$

$$1.14 \frac{\text{mg}}{1} \times \frac{1{,}320}{1{,}300} = 1.16 \frac{\text{mg}}{1}$$

The maximum zinc concentration for any one day for the total discharge flow would be calculated as a flow weighted average of the above concentrations:

$$\frac{(7{,}200 \text{ gal/day} \times 1.89 \text{ mg/l}) + (5{,}800 \text{ gal/day} \times 0.69 \text{ mg/l}) + (2{,}600 \text{ gal/day} \times 1.16 \text{ mg/l})}{7{,}200 \text{ gal/day} + 5{,}800 \text{ gal/day} + 2{,}600 \text{ gal/day}}$$

$$\approx 1.32 \text{ mg/l}$$

Zinc annual average mass limitations:

Ferrous Investment Casting:

$$3.5 \frac{\text{tons}}{\text{day}} \times 150 \frac{\text{days}}{\text{year}} \times 2{,}000 \frac{\text{lbs}}{\text{ton}} \times \frac{4.41 \text{ lbs}}{\text{million lbs}} = 4.63 \frac{\text{lbs}}{\text{year}}$$

Copper Investment Casting:

$$2 \frac{\text{tons}}{\text{day}} \times 150 \frac{\text{days}}{\text{year}} \times 2{,}000 \frac{\text{lbs}}{\text{ton}} \times \frac{1.98 \text{ lbs}}{\text{millions lbs}} = 1.19 \frac{\text{lbs}}{\text{year}}$$

Aluminum Investment Casting:

$$1 \frac{\text{ton}}{\text{day}} \times 150 \frac{\text{days}}{\text{year}} \times 2{,}000 \frac{\text{lbs}}{\text{ton}} \times \frac{2.97 \text{ lbs}}{\text{million lbs}} = 0.891 \frac{\text{lbs}}{\text{year}}$$

Total annual average allowance: $6.71 \frac{\text{lbs}}{\text{year}}$ zinc

It is recommended that noncontinuous discharging plants with annual average mass limitations track their mass discharged throughout the year by a cumulative total ("running balance") of the mass of each pollutant discharged. By closely monitoring the mass discharged during each batch and updating the total discharge to date, plants with potential compliance problems will be aware of the situation with adequate time to take remedial action. Remedial action might include wastewater flow reduction and improvement to treatment system performance.

Example 5 - PSES for Small Malleable Iron Plant

Plant E is a small malleable iron foundry with discharge to a POTW sewer. The foundry pours eight tons of metal per day, 260 days per year. Total average yearly production is 2,080 tons. Process wastewater is generated by casting cleaning, casting quench, and dust collection and grinding scrubber operations. The plant has a combined recycle system with a drag tank after which process wastewater is recycled to the wet scrubber, casting cleaning, and casting quench processes. Blowdown flow is treated in a central treatment facility. Treated process wastewater is combined with sanitary wastewater before being discharged to the city sewer. The foundry has various product lines; not all cast products go through the same processing steps. Five tons of metal are poured per day that result in castings that are cleaned. Two tons of metal are poured per day that result in castings that are quenched. A single wet dust collection scrubber cleans air that is laden with dust from sand handling (mold and core making, shake-out, sand mulling), pouring floor fumes, and grinding operations. The scrubber air flow is 12,000 SCFM, 90 percent of the air scrubbed originates from the sand handling and pouring floor areas, the remaining 10 percent originates from the grinding area. A dry melting furnace scrubber (baghouse) is used at this plant. A wastewater flow block diagram for Plant E is provided in Figure C-5.

PSES for this foundry would be based on the standards for plants where 3,557 tons or less malleable iron are poured per year. The production used to make this determination is the annual average production, calculated in a manner consistent with the methods discussed in the beginning of this appendix.

Presented below are example calculations of PSES for total maximum monthly phenols and TTO for Plant E. This example also illustrates the calculation of equivalent concentration limitations where dilute wastestreams (in this case sanitary wastewater) are added to the treated wastewater prior to discharge to the sewer. It will be assumed for this example that the PSES compliance date (October 31, 1988) has been reached.

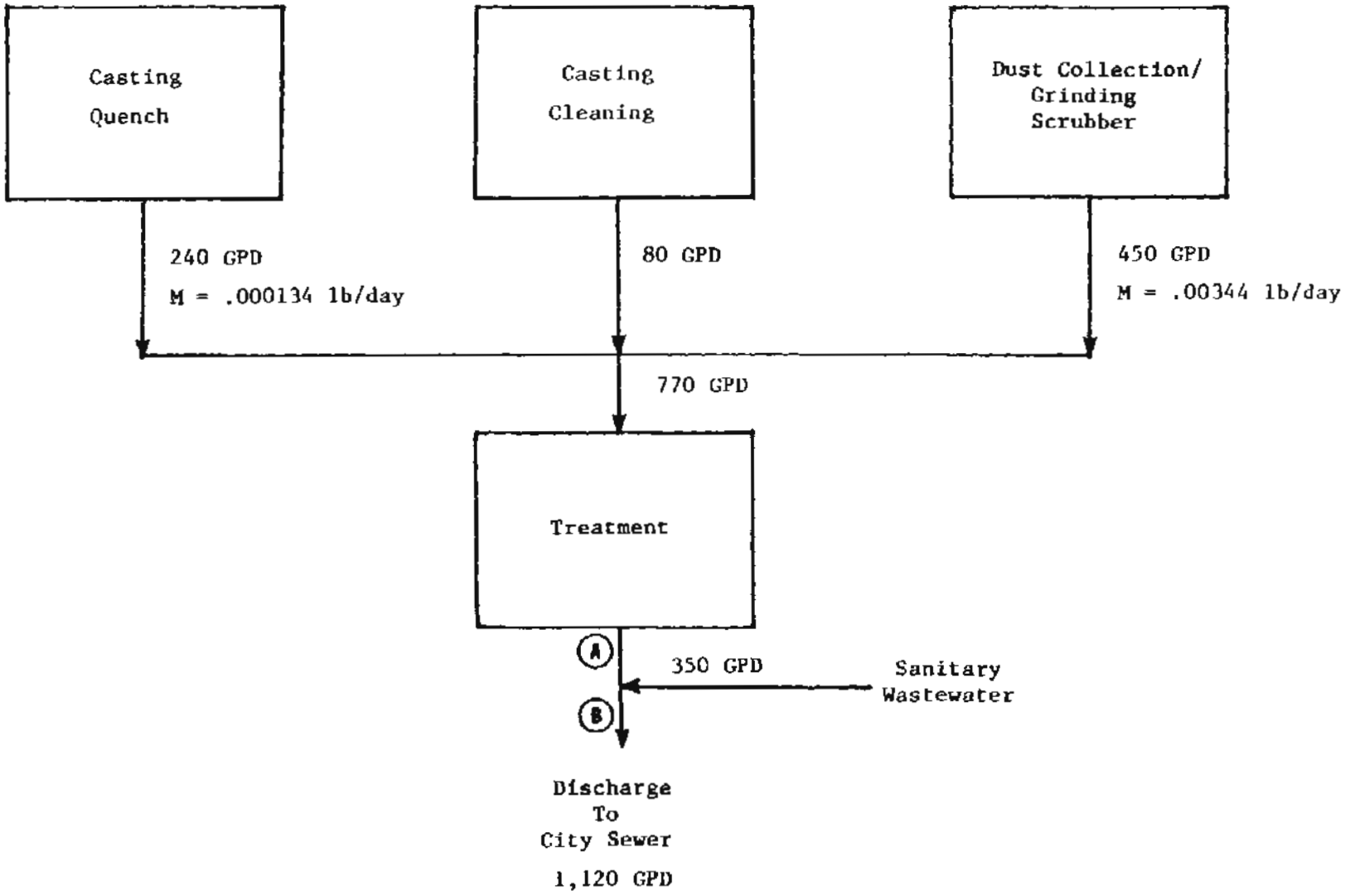

Figure C-5

COMBINED WASTESTREAMS FOR EXAMPLE 5: MALLEABLE IRON PLANT

Plant E Fact Sheet

Average annual production: 2,080 tons of metal poured/year

Daily Production (260 days/yr): 8 tons of metal poured/day

Casting cleaning production: 8 tons of metal poured/day*

Casting quench production: 8 tons of metal poured/day*

Scrubber air flow: 12,000 SCFM, 8 hours/day
90 percent of air is from sand handling areas and pouring floor
10 percent of air is from grinding area

Process Wastewater Discharge (Blowdown) flows:

Casting cleaning:	80 gallons/day
Casting quench:	240 gallons/day
Wet scrubber:	450 gallons/day

Sanitary wastewater: 350 gallons/day

Casting cleaning and casting quench wastewaters are considered an unregulated process wastewater when calculating total phenols limitations because total phenols is not regulated in this waste stream. Sanitary wastewater is a dilution stream that is added after treatment. A mass allowance for total phenols can be calculated based on the combined wastestream formula, introduced in Example 3:

$$M_T = \sum_{i=1}^{N} Mi \times \left[\frac{F_T - F_D}{Fi}\right] \text{, where}$$

M_T = Alternative mass limit for the pollutant in the combined wastestream (mass per day)

M_i = Production-based categorical pretreatment standard for the pollutant in regulated stream i (or the standard multiplied by the appropriate measure of production if the standards being combined contain different units of measurement)

---

* Note that even though not all poured metal is subject to these processes, limitations are based on the total metal poured for the subcategory (ferrous).

F_i = Average daily flow (at least 30 day average) of regulated stream i

F_D = Average daily flow (at least 30 day average) of dilute wastestream(s) through the combined treatment facility

F_T = Average daily flow (at least 30 day average) through the combined treatment facility (including regulated, unregulated and dilute wastestreams)

N = Total number of regulated streams

As in Example 3, the first step in implementing the combined waste stream formula is to calculate the sum of the mass limits of the regulated waste streams, ΣM_i.

Dust collection scrubber wastewater (regulated - see 40 CFR §464.35(c)(2):

$$12{,}000 \text{ SCFM} \times 0.90 \times 60 \frac{\text{min}}{\text{hr}} \times 8 \frac{\text{hrs}}{\text{day}} \times \frac{0.225 \text{ lb}}{\text{billion SCF}}$$

$$= 0.00117 \frac{\text{lb}}{\text{day}}$$

Grinding scrubber wastewater - grinding area (regulated - see 40 CFR §464.35(d)):

No discharge allowance for process wastewater pollutants.

The sum of the mass limits for the regulated wastestreams is 0.00117 lb/day + 0.0 lb/day = 0.00117 lb/day.

The average daily flow through the combined treatment facility (F_T) is 80+ 240 + 450 = 770 gallons/day. Dilution flow does not enter the treatment system, and therefore is not considered in this calculation (set equal to zero). The average daily flow of the regulated wastestreams (F_i) is 450 gallons/day. Substituting these values into the combined wastestream formula yields:

$$M_T = 0.00117 \frac{\text{lb}}{\text{day}} \times \left(\frac{770 - 0}{450}\right) = 0.00200 \frac{\text{lb}}{\text{day}}$$

Therefore, the maximum monthly average PSES for total phenols in the combined wastestream, prior to the addition of sanitary wastewater, is 0.00200 lb total phenols/day. It is assumed that the sampling point for compliance monitoring is Point A, prior to addition of sanitary wastewater and upstream of the discharge point to the POTW sewer.

In order to calculate the limit that would apply at the point of discharge to the sewer (see Figure C-5, Point B), the addition of

sanitary wastewater to the treatment effluent must be taken into account. This is a three-step process: first, an alternative concentration limit for the treatment effluent stream (Point A) is calculated using an alternative, concentration-based form of the combined wastestream formula. Next, it is necessary to determine the actual concentrations of the pollutants of concern in the streams that are added after treatment. Third, an adjusted concentration limit for Point B is calculated.

The product of this calculation is a concentration-based limit, in contrast to the mass-based limit already calculated for this plant. These equivalent concentration-bases limits may be used as the standards for metal molding and casting plant discharges if the affected POTW and industrial user agree that an alternative concentration limit also is appropriate. The calculations necessary to arrive at the equivalent concentration-based limit for plant E are presented below.

Step 1

An alternative concentration limit is calculated using the following form of the combined wastestream formula:

$$C_T(A) = \frac{\sum_{i=1}^{N} C_i F_i}{\sum_{i=1}^{N} F_i} \times \left[\frac{F_T - F_D}{F_T}\right]$$

where

$C_{T(A)}$ = Alternative concentration limit for the combined flow of the regulated wastestream plus other (unregulated and dilute) wastestreams added prior to treatment.

C_i = Categorical pretreatment standard for the pollutant in the regulated wastestream (mg/l).

F_i = Regulated process wastestream flow

F_T = Total flow at point A (treatment effluent)

F_D = Dilution flow at point A

Note that C_i is in mg/l. If the categorical pretreatment standards for the pollutants of concern are in mg/l, then they can be substituted directly into the formula. However, if the categorical pretreatment standards are mass-based, as in the metal molding and casting category, they must first be converted to equivalent concentration limits before they can be used in the formula:

Concentration Equivalent C_i, for the regulated waste stream, wet dust collection scrubber, =

$$\frac{\text{(Production-based limit) x (Avg. daily production)}}{\text{(Avg. daily flow from regulated process) x (Conversion factors)}}$$

$C_{(\text{Wet Scrubber})}$ =

$$\frac{\text{(0.225 lb/billion SCF) x (12,000 SCF/min) x (480 min/day)}}{\text{(450 gallons/day) x (3.785 l/gallon) x (1 lb/454,000 mg)}}$$

= 0.345 mg/l total phenols

Substituting the appropriate concentrations and flows into the alternative concentration-based combined wastestream formula yields:

$$C_{T(A)} = \left[\frac{(0.345 \text{ mg/l})(450 \text{ gal/day})}{450 \text{ gal/day}}\right] x \left[\frac{770 \text{ gal/day} - 0 \text{ gal/day}}{770 \text{ gal/day}}\right]$$

= 0.345 mg/l total phenols

Step 2

The actual concentration of total phenols is determined for the streams added after treatment. This would be determined by sampling and analysis of the sanitary wastewater at Plant E. For the purposes of this calculation it will be assumed that sanitary wastewater does not contain detectable levels of total phenols.

Step 3

The adjusted concentration limit for the point of discharge may now be calculated, using the following formula:

$$C_{T(B)} = \frac{CWF_{(A)} \times F_{(A)} + M}{F_{(B)}}$$

where

$C_{T(B)}$ = Adjusted concentration limit for point B
$CWF_{(A)}$ = Limit calculated for point A using the combined wastestream formula
$F_{(A)}$ = Flow at point A
$F_{(B)}$ = Flow at point B
M = Actual mass of pollutant in unregulated or dilute streams added after treatment

Substituting the appropriate values into this formula yields:

$$C_{T(B)} = \frac{(0.345 \text{ mg/l} \times 770 \text{ gallons/day}) + 0 \text{ mg/day}}{1120 \text{ gallons/day}}$$

= 0.237 mg/l

Thus, the alternative maximum for monthly average concentration limit for total phenols was reduced from 0.345 mg/l to 0.237 mg/l because of dilution from sanitary wastewater.

Maximum for Monthly Average PSES for TTO:

It will be assumed that the industrial user has elected to comply with the TTO pretreatment standard rather than the alternative monitoring parameter, oil and grease. The casting quench and dust collection scrubber waste streams are considered regulated wastestreams because TTO standards are promulgated for them in the metal molding and casting category. Sanitary wastewater is a dilution stream added after treatment. Casting cleaning wastewater is considered to be a dilution stream added prior to treatment for the pollutant TTO. TTO was not chosen for regulation in the ferrous casting cleaning process segment because data from sampling and analysis indicated that wastewaters from that process segment do not contain toxic organics at treatable concentrations. For the purposes of calculating TTO limits, those process wastestreams for which TTO is not regulated should be considered dilution waste streams unless available data indicate otherwise. Local Control Authorities have the discretion to determine (e.g., by wastewater sampling) whether unregulated wastestreams should be considered as dilution under 40 CFR §403.6(d).

The first step in applying the combined wastestream formula is to calculate the sum of the mass TTO limits for the regulated waste streams, ΣM_i:

Casting quench (regulated):

$$\frac{8 \text{ tons metal}}{\text{day}} \times \frac{2000 \text{ lb}}{\text{ton}} \times \frac{.00838 \text{ lb TTO}}{\text{million lbs metal}} = 0.000134 \frac{\text{lb}}{\text{day}}$$

Dust collection scrubber (regulated):

$$12{,}000 \text{ SCFM} \times 0.9 \times \frac{.664 \text{ lb TTO}}{\text{billion SCF}} \times 60 \frac{\text{min}}{\text{hr}} \times 8 \frac{\text{hrs}}{\text{day}} = 0.00344 \frac{\text{lb}}{\text{day}}$$

Thus the sum of the mass limits for the regulated waste streams is 0.000134 lb/day + 0.00344 lb/day = 0.00357 lb/day TTO.

The average daily flow through the combined treatment facility, F_T, is 80 gallons/day + 240 gallons/day + 450 gallons/day + = 770 gallons/day. The average daily flow of dilute waste streams, F_D, is the casting cleaning wastewater flow, or 80 gallons/day. The average daily flow of the regulated wastestreams, F_i, is the sum of the casting quench and dust collection scrubber flows, or 690 gallons/day.

Substituting these values into the combined wastestream formula yields:

$$M_T = 0.00357 \frac{lb}{day} \times \left(\frac{770-80}{690}\right) = 0.00357 \frac{lb}{day} \text{ TTO}$$

Thus the maximum monthly average PSES for TTO in the combined wastestream prior to the addition of sanitary wastestream is 0.00357 lb TTO per day.

TTO would be defined in this case by the union of the lists of organic pollutants used to define TTO for the ferrous castng quench and the ferrous dust collection scrubber segment. See Appendix A of this Development Document for the definition of TTO for each metal molding and casting process segment.

As in the case of total phenols, an equivalent concentration limit could be calculated for the combined stream after the addition of sanitary wastewater, a dilution stream added after treatment. The calculations will not be presented here; however, the limit would be determined by following the same three-step method described in detail for total phenols.

If the assumption is made that casting cleaning process wastewater has been sampled and found to contain two toxic organics, then casting cleaning wastewater should be considered an unregulated waste stream for TTO. The above example will be repeated assuming that casting cleaning wastewater from Plant E has been sampled and analyzed. The results indicate that bis(2-ethylhexyl) phthalate and butyl benzyl phthalate are present at treatable concentrations. The source of these toxic organics is traced to residual sand binders cleaned from the casting.

The Control Authority first should ascertain whether the toxic organics can be eliminated at the source by improved handling and storage of solvents, sand binders, core making chemicals, and other organic liquids at the plant site. If it is determined that the toxic organics are introduced into the water during an integral processing step, then limits should be calculated using the combined wastestream formula as above, but casting cleaning wastewater should be considered on unregulated stream, rather than as a dilution stream.

The sum of the mass limits for the regulated streams, ΣM_i, is not affected by this change and remains:

$$M_i = 0.00357 \text{ lb/day}$$

Similarly, the average daily flow through the combined treatment facility, F_T, is still 770 gallons/day. However, the average daily flow of dilute waste streams now is equal to 0 gallons/day. Substituting these values into the combined waste stream formula yields:

$$M_T = 0.00357 \frac{lb}{day} \times \left(\frac{770-0}{690}\right) = 0.00398 \frac{lb}{day} \text{ TTO}$$

Note that the mass limit calculated from the assumption that casting cleaning is on unregulated stream is less stringent than the limit calculated from the assumption that it is a dilution stream. Once again, an equivalent concentration-based limit for the combined treated process and sanitary wastewater stream also could be calculated using the three-step method illustrated for total phenols.

In some cases, the local Control Authority may wish to enforce a more stringent standard than that obtained by the application of the combined wastestream formula; for example, if the receiving POTW is required to meet more stringent standards by its own permit. 40 CFR §403.4 of the General Pretreatment Regulations provides that local control authorities can establish more stringent pretreatment standards, if, for example, the applicable categorical pretreatment standards do not allow the POTW to meet its permit requirements for TTO.

The following is an example of one method of calculating such a standard for TTO for Plant E. In this example, it also will be assumed that casting cleaning wastewater from Plant E has been sampled and analyzed. The results indicate that bis (2-ethylhexyl) phthalate and butyl benzyl phthalate are present at treatable concentrations. In this case, a TTO mass allowance for casting cleaning would be calculated as follows:

Long-term average treatment effectiveness concentration (from Table VII-13):

bis(2-ethylhexyl) phthalate	0.032
butyl benzyl phthalate	0.010
TTO	0.042 mg/l

The maximum for monthly average concentration is calculated by multiplying the above TTO concentration by the 10-day average oil and grease variability factor of 2 (the one day maximum variability factor for oil and grease is 6 - see the Development Document, Section VII):

$$0.042 \text{ mg/l} \times 2 = 0.084 \text{ mg/l}$$

Casting cleaning wastewater:

$$8 \frac{\text{tons}}{\text{day}} \times 10.7 \frac{\text{gallons}^*}{\text{ton}} \times 0.084 \frac{\text{mg}}{\text{l}} \times \frac{3.78 \text{ l}}{\text{gallon}} \times \frac{1 \text{ lb}}{454{,}000 \text{ mg}}$$

$$= 0.000037 \frac{\text{lb}}{\text{day}}$$

---

* production normalized blowdown flow established as basis for mass limits for casting cleaning - see the Development Document Section IX

Casting quench wastewater:

$$8 \frac{\text{tons}}{\text{day}} \times 2{,}000 \frac{\text{lbs}}{\text{ton}} \times \frac{0.00838 \text{ lb}}{\text{million tons}} = 0.000134 \frac{\text{lb}}{\text{day}}$$

Dust collection scrubber wastewater (sand handling area):

$$12{,}000 \text{ SCFM} \times 0.90 \times 60 \frac{\text{min}}{\text{hr}} \times 8 \frac{\text{hrs}}{\text{day}} \times \frac{0.664 \text{ lb}}{\text{billion SCF}}$$

$$= 0.00344 \frac{\text{lb}}{\text{day}}$$

Grinding scrubber wastewater (grinding area):

No discharge allowance for process wastewater pollutants.

Total TTO allowance: $0.00361 \frac{\text{lb TTO}}{\text{day}}$

TTO would be defined in this case by the union of the lists of organic pollutants used to define TTO for the ferrous casting quench and the ferrous dust collection scrubber segment, including bis(2-ethylhexyl) phthalate and butyl benzyl phthalate. See Appendix A of the Development Document for the definition of TTO for each process segment in which TTO is regulated.

☆U.S. GOVERNMENT PRINTING OFFICE: 1986 491 191 46110