EPA340/1-77-026

Stationary Source Enforcement Series

CONTROL OF PARTICULATE EMISSIONS FROM WOOD—FIRED BOILERS

U.S. ENVIRONMENTAL PROTECTION AGENCY
Office of Enforcement
Office of General Enforcement
Washington, D.C. 20460

CONTROL OF PARTICULATE EMISSIONS

FROM

WOOD-FIRED BOILERS

Prepared by

PEDCo Environmental, Inc.
Suite 13, Atkinson Square
Cincinnati, Ohio 45246

Contract No. 68-01-3150, Task Order No. 11

Principal Author: Richard W. Boubel, Ph.D.

PEDCo Project Manager: Donald J. Henz, P.E.

EPA Project Officer: James Herlihy

Prepared for

U.S. ENVIRONMENTAL PROTECTION AGENCY
Division of Stationary Source Enforcement
Technical Support Branch

EPA REVIEW NOTICE

This report has been reviewed by the Environmental Protection Agency and approved for publication with some modification. Approval does not signify that the contents necessarily reflect the views and policies of the Agency, nor does mention of trade names or commercial products constitute endorsement or recommendation for use.

The Stationary Source Enforcement series of reports is issued by the Office of Enforcement, Environmental Protection Agency, to assist the Regional Offices in activities related to enforcement of implementation plans, new source emission standards, and hazardous emission standards to be developed under the Clean Air Act. Copies of Stationary Source Enforcement reports are available-as supplies permit-from Air Pollution Technical Information Center, Environmental Protection Agency, Research Triangle Park, North Carolina 27711, or may be obtained, for a nominal cost, from the National Technical Information Service, 5285 Port Royal Road, Springfield, Virginia 22161.

ACKNOWLEDGEMENT

This report was prepared for the U.S. Environmental Protection Agency by PEDCo Environmental, Inc., Cincinnati, Ohio. Mr. Donald J. Henz was the PEDCo Project Manager. Richard W. Boubel, Ph.D. was the principal author of the report.

Mr. James Herlihy was the Project Officer for the U.S. Environmental Protection Agency.

TABLE OF CONTENTS

		Page
1.0	INTRODUCTION	1-1
	Purpose of this Report	1-1
	Scope of Work	1-2
	History of Wood as Fuel	1-3
	Present Use of Wood as Fuel	1-4
	Worldwide Use of Wood Fuel	1-5
	Use of Wood as Fuel in the United States	1-6
	Important Properties of Wood Fuel	1-11
	Users of Wood-Fired Boilers	1-17
	Distribution of Wood-Fired Boilers in the United States	1-21
2.0	COMBUSTION OF WOOD	2-1
	Properties of Wood as Fuel	2-1
	Theory of Wood Combustion	2-12
	Practical Aspects of Wood Combustion	2-13
	Combustion of Wood with Auxiliary Fuels	2-21
3.0	PROCESS DESCRIPTIONS	3-1
	Wood Handling and Storage Systems	3-1
	Wood-Burning Furnaces	3-16

TABLE OF CONTENTS (continued)

		Page
	Boilers	3-34
	Instrumentation	3-38
	Controls	3-45
4.0	OPERATING VARIABLES	4-1
	Fuel Variables	4-1
	Combustion Air Variables	4-13
	Operator Variables	4-32
5.0	PARTICULATE EMISSIONS	5-1
	Regulations for Particulate Emissions	5-1
	Particulate Measurement Methods	5-9
	Theoretical Emissions	5-16
	Measured Emissions	5-20
6.0	CONTROL TECHNOLOGY	6-1
	Control Devices	6-1
	Operator Training	6-29
	Instrumentation	6-32
	Maintenance and Operation	6-35
	Ash Cleaning Schedule	6-39
	Regulatory Aspects of Wood-Fired Boiler Operation	6-41
APPENDIX A	NUMBER OF WOOD-FIRED BOILERS BY STATE	A-1
APPENDIX B	CHARACTERISTICS OF BARK FUEL	B-1

TABLE OF CONTENTS (continued)

		Page
APPENDIX C	NATIONAL COUNCIL OF THE PAPER INDUSTRY FOR AIR AND STEAM IMPROVEMENT AIR QUALITY IMPROVEMENT TECHNICAL BULLETIN NO. 70	C-1

LIST OF FIGURES

No.		Page
1	Flow diagram proposed for EWEB expansion	1-19
2	Some methods of energy conversion using direct combustion of residue materials	1-22
3	Number of boilers and (10^3 tons of wood burned per year) blank indicates no boilers	1-24
4	Cross-section of a typical hogging machine	2-4
5	Relation of excess air to percentage of oxygen and carbon dioxide in flue gases	2-15
6	Relation of heat loss to moisture content of Douglas-fir bark	2-15
7	The effect of fuel moisture on steam production as reported by Johnson	2-17
8	Hogged wood-waste fuel system	3-3
9	System for preparing hogged fuel	3-4
10	System to limit fuel-storage time by insuring that fuel first into storage will be first out to be burned	3-4
11	Typical hot-hog dryer system	3-13
12	Typical rotary dryer	3-13
13	Typical vibratory hot-conveyor dryer	3-15
14	Dutch oven furnace and boiler	3-15
15	Pile burning: "Dietrich" cell	3-23

LIST OF FIGURES (continued)

No.		Page
16	Spreader stoker fired steam generator EWEB - Number 3	3-25
17	Small spreader-stoker furnace	3-26
18	Pneumatic stoker - No. 2 boiler	3-27
19	The Energex cyclonic burner	3-30
20	An Energex-fired package boiler	3-30
21	Large suspension burning system	3-32
22	A common arrangement of instruments to monitor opacity of exit flue gases	3-46
23	A flue-gas analyzer used to control dampers for induced-draft (I.D.) and forced-draft (F.D.) fan systems	4-18
24	Flow path of 100 pounds of cinders high in inorganic ash, screened and reinjected, with good combustion	4-29
25	Method 5 sampling system	5-11
26	Relation of opacity to optical density	5-17
27	135 EPA Method 5 tests in Oregon and Washington	5-24
28	Cyclone collector for particles in flue gases	6-4
29	Relation of particle size to collection efficiency of cyclones	6-6
29a	Simplified diagram of a multiple cyclone	6-6
30	A cascading shower scrubber for increasing the efficiency of removing small particles from gases	6-11
31	A venturi scrubber system in which turbulence downstream from throat increases the contact of particles and liquid droplets	6-11

LIST OF FIGURES (continued)

No.		Page
32	Process weight charts	6-45
33	135 Oregon and Washington boiler tests on two process weight charts	6-46
34	30 and 90 million Btu/hour allowable emissions	6-48

LIST OF TABLES

No.		Page
1	Use of Roundwood and Bark for Fuel in Selected Countries in 1972	1-7
2	U. S. Fuel Consumption by Conventional Stationary Combustion Systems (10^{12} Btu/year)	1-9
3	Electric-Generating Utility Boilers, 1972	1-10
4	Flue Gas Emissions from Industrial Boilers	1-12
5	Flue Gas Emissions from Commercial/ Institutional Boilers	1-13
6	Uses of Process Steam in Forest Product Manufacturing Plants	1-23
7	Approximate Size Range of Typical Components of Wood Fuel	2-3
8	Typical Ultimate Analyses of Moisture-Free Samples of Hogged Fuel Bark	2-7
9	Typical Proximate Analyses of Moisture-Free Wood Fuels	2-8
10	Typical Heating Values of Moisture-Free Bark and Wood	2-10
11	Analyses of Some Selected Wood Refuse Burned as Fuel	2-11
12	Analysis of Ash from Hogged Wood-Waste Fuel	2-19
13	Factors Affecting the Combustion Reaction in Boiler Installations Fired by Hogged Fuel	4-2

LIST OF TABLES (continued)

No.		Page
14	EPA Method 5 Data as Reported by Morford	5-22
15	EPA Method 5 Tests on Hog Fuel Boiler Installations in Oregon and Washington	5-23
16	High-Volume Tests of Wood-Fired Boilers at Steady Loading	5-26
17	High-Volume Tests of a Wood-Fired Boiler at Variable Loads and Excess Air Settings (Boiler 5)	5-27
18	Results of Efficiency Test of Centrifugal Collector on Wood-Fired Boiler (Boiler K)	5-28
19	Particulate Emissions of Three Boilers at Various Loads	5-29
20	Particulate Emissions from a Small Spreader Stoker with and without Cinder Reinjection (Boiler 6)	5-29
21	Particle Sizes from High-Volume Tests of Wood-Fired Boilers	5-31
22	Ash Analysis of Particulate from Several Wood-Fired Boilers	5-33
23	Particulate Emission Analysis and Calculated Ash Values (Boiler 5)	5-33
24	Comparison of Visual Opacity with Optical Transmissometer for a Wood-Fired Boiler	5-35
25	Comparison of EPA Method 5 and High-Volume Particulate Sampling Values	5-36
26	Efficiency Tests of a Centrifugal Collector	6-9
27	Emissions from Boiler Equipped with Low Energy Scrubber	6-15

LIST OF TABLES (continued)

No.		Page
28	Efficiency of Dry Scrubber on Hogged Fuel Boiler	6-17
29	Efficiency of Dry Scrubber on Boiler Burning Hogged Fuel with High Salt Content	6-18
30	Efficiency of Dry Scrubber on Boiler Burning Bark/Coal Fuel	6-19
31	Efficiency of Dry Scrubber on Boiler Burning Bark/Oil Fuel	6-20
32	Emission Data from Power Boilers Fired with Bark/Wood Plus Other Fuels	6-23
33	Tests of a Hogged Fuel Boiler Equipped with Nomex Filters	6-27
34	Properties of Particulate Collectors on Wood-Fired Boilers	6-30
35	Summary of Regulations for Wood-Fired Boilers	6-43
36	Allowable Particulate Emissions from Boilers in Vermont and Missouri	6-49

1.0 INTRODUCTION

PURPOSE OF THIS REPORT

This report is intended primarily as a guide for control agency personnel and engineers who are not familiar with wood-fired boilers. The presentation is thorough and detailed; trade jargon has been avoided, and technical terms are defined. A secondary purpose of this report is to compile in a single document the latest available information on air pollution control technology as it concerns wood-fired boilers. This information includes descriptions of control systems, emission sampling procedures, applicable regulations, and costs of control.

The discussions of control technology concern particulate emissions only. Although wood-fired boilers also produce gaseous pollutants such as carbon monoxide, oxides of nitrogen, and unburned hydrocarbons, little accurate information is currently available about either the quality or quantity of these emissions. This report therefore considers gaseous emissions only with respect to their possible effects on firing practices, particulate control equipment, or safety.

Many of the figures and much of the text of certain sections are taken from a publication titled "Boilers Fired with Wood and Bark Residues" by Dr. David C. Junge of Oregon State University.[8] This bulletin is intended as a guide for boiler operators and fireman and is recommended as a general reference.

SCOPE OF WORK

Wood-fired boilers are theoretically of any size or configuration, ranging from a simple oil drum with a copper coil, as used by the makers of "white lightening," to very large, high-pressure high-temperature power boilers fully computer-controlled. This report is concerned with wood-fired boilers, regardless of size, that meet the following criteria:

1. The boilers are fired mechanically. This criterion eliminates the moonshiner's boiler and also a great number of other small, hand-stoked boilers. Most of these are designed for intermittent operation and they should each be considered on an individual basis.

2. The boilers are designed primarily for wood fuel. Some paper mills operate large "bark-burning" boilers that produce 85 percent of their output from combustion of natural gas and only 15 percent from combustion of wood bark. These boilers are designed and operated according to the principal fuel and cannot be classed with wood-fired boilers for comparison.

3. The boilers are furnace-boiler units, rather than incinerators. Furnaces used as incinerators, either separately or ahead of other incineration chambers, are usually governed by incineration

regulations and practices. This criteria also eliminates wigwam-type burners, fireplaces, wood stoves, and open fires.

HISTORY OF WOOD AS FUEL

Wood was undoubtedly man's first fuel. In prehistoric times it was used for heat, light, cooking, and manufacturing. The use of wood as a fuel continued to increase through recorded history as man's needs for energy increased. Use of coal was introduced with the steam engine during the industrial revolution. Even in industrialized nations the use of wood continued for firing of both stationary and mobile boilers. The early steamships and many early locomotives were operated on wood-fired boilers.

Logging was conducted exclusively with steam donkey engines, using one-pass fire tube boilers. The sawmill was steam-powered, with both the carriage and the saws driven by steam generated in a stationary, wood-fired boiler.

As electric power came into wider use, electric motors became more economical than individual steam engines. Central utility stations were constructed to generate electricity from steam engines or turbines. These stations usually burned coal, although oil and then natural gas became important fuels early in the twentieth century.

Gas and oil offered advantages over coal in that they were cleaner, easier to automate, easier to fire, and not

much more expensive. The continuing demand for coal for making steel kept its price well above those of natural gas and residual oil, which were considered almost as "waste fuels."

With these developments the use of wood as fuel declined. To generate the same amount of energy from wood as from coal, the user must burn about twice the wood by weight and about 5 times by volume. With oil, the comparison is even less favorable. One must burn about 4 pounds of wood to provide the same energy as 1 pound of oil and, in terms of volume, about 11 cubic feet of wood for the same energy release as 1 cubic foot of oil. For these reasons, the operators of steamships and locomotives eventually switched to coal and oil as their fuels of choice over wood.

PRESENT USE OF WOOD AS FUEL

Today, the domestic use of wood as a fuel is vastly different from that 100 years ago. Wood is still burned as fuel where it occurs as a by-product of a manufacturing operation.

1. Lumber and plywood manufacturing facilities can use bark and other residues to fire a boiler for energy. In some areas, the mill may generate an excess of wood residue fuel and sell it to another energy user, such as a utility or institution, or possibly to another mill that does not produce enough fuel.

2. Paper mills use only the white wood for paper and must dispose of the undesirable bark. This bark can be burned in a power boiler to generate plant steam. If not enough bark is readily available it may be advantageous to purchase additional bark or wood residue from a nearby lumber mill.

3. Particle board and hardboard manufacturing plants must dispose of trim, surface material, or other combustible wood waste. Most plants can convert this dry, combustible fuel to energy much more economically than they can burn oil or gas. The steam generated by burning wood is needed to produce the board product.

4. Furniture manufacturing facilities may generate enough dry, waste wood that it can be used economically for process steam generation or sold to another user for central station generation.

WORLDWIDE USE OF WOOD FUEL

The efficiency of converting solar energy, through wood, to thermal energy from a boiler is approximately one-half of one percent. Although this is poor efficiency, the process is still more efficient than some other suggested methods of converting solar energy, such as in solar cells and batteries.

Whereas we in the United States tend to think of wood as a product source, many people of the world consider it as an energy source.[1] Worldwide, energy production is by far the greatest single use for bark and wood. Even as recently as 1972, nearly half of the wood harvested was used directly for fuel.[2] More people are warmed by wood and bark than by any other fuel. In some countries the demand for wood and

bark is so great that wood is not even considered as a building material. Table 1 gives information on the worldwide use of wood and bark for fuel in 1972; the countries listed are those with the greatest forest production, as reported by the United Nations.[2] The values are based on an average factor of 0.13 as the ratio of bark to solid wood. Although this factor may not be exact worldwide, it does represent a reasonable estimate for bark production.[3] Table 1 uses the term "unit" as a measure of quantities of wood. A unit is defined as 200 cubic feet of wood measured in the containing vehicle of transportation, without packing, at either the mill or delivery point, whichever is specified in the fuel contract. Wood residue and bark are usually sold on a volume basis because they are bulky, low in calorific value, and high in moisture content.[4]

USE OF WOOD AS FUEL IN THE UNITED STATES

As shown in Table 1, the domestic use of wood as fuel can be estimated at 2295×10^3 units of roundwood and 8122 units of bark per year, if all the bark is used as fuel. Figures for the State of Oregon (1972) indicate that 62 percent of the bark produced was used as fuel. Applying this factor to the data of Table 1 indicates an annual fuel use of 7331×10^3 units of wood and bark. A recent report[5] estimates the annual use of wood for boiler fuel at industrial and commercial/institutional facilities as 2782×10^4

Table 1. USE OF ROUNDWOOD AND BARK FOR FUEL IN SELECTED COUNTRIES IN 1972[2]

Country	Total roundwood, 10^3 units[a]	Roundwood for fuel[b]		Estimated total bark for additional fuel, 10^3 units[c]
		10^3 units[a]	Percent of total roundwood	
World	433,311	201,294	46.4	56,327
USSR	67,628	15,009	22.2	8,829
USA	62,860	2,295	3.6	8,122
China	31,607	23,661	74.9	4,061
Brazil	28,958	24,720	85.4	3,708
Indonesia	21,189	18,364	86.7	2,825
Canada	21,189	706	3.3	2,825
India	20,659	18,717	90.6	2,649
Nigeria	10,594	10,065	95.0	1,413
Sweden	10,241	530	5.2	1,413
Japan	8,122	353	4.4	1,059
Finland	7,593	1,236	16.3	1,059

[a] One unit of wood or bark equals 200 ft^3.

[b] Includes roundwood used for charcoal.

[c] Bark estimated by multiplying roundwood production by a factor of 0.13.

tons. At an average density of 2 tons per unit this would be 14,391 x 10^3 units per year, or double the amount calculated earlier. Obviously it is difficult to estimate the exact consumption of wood and bark as fuel in the several thousand wood-fired boilers in the United States.

On an energy-use basis, it is estimated that wood and bark contribute less than 1 percent of the total energy developed by boilers in the United States.[5] Table 2 indicates the domestic consumption of various fuels burned in boilers, as reported to the EPA.[5] Boilers fired with wood and bark are not a major concern because of their relative importance based upon total energy generated. The concern with wood-fired boilers is because of the numbers of boilers rather than their average production. Most of these boilers are small as compared with coal-fired boilers.

Table 3 lists the size and distribution of utility boilers in the United States.[5] Although the table shows no wood-fired utility boilers, some utilities are considering wood-fired units and one utility is currently burning wood and bark. The Eugene (Oregon) Water and Electric Board (EWEB), a relatively small public utility, has three boilers with capacities under 500 x 10^6 Btu/hr. These boilers generate electricity from wood residue, which is primarily bark.[6] The average yearly fuel consumption of this facility

Table 2. U.S. FUEL CONSUMPTION BY CONVENTIONAL STATIONARY COMBUSTION SYSTEMS[5]

(10^{12} Btu/Year)

Fuel	Utilities (1974)	Industrial (1973)	Commercial (1973)	Residential (1973)	Total
External combustion	14,798	8,540	4,450	8,057	35,845
Coal	8,501	1,370	156	192	10,219
Petroleum	3,039	1,700	2,379	2,280	9,398
Natural gas	3,257	5,200	1,914	5,450	15,821
Bagasse		20			20
Wood	1	250	1	135	387
Internal combustion	589	2,760	50	0	3,399
Petroleum	312	360	25	0	697
Natural gas	277	2,400	25	0	2,702
Total	15,387	11,300	4,500	8,057	39,244

Table 3. ELECTRIC-GENERATING UTILITY BOILERS, 1972[5]

Capacity 10^6 Btu/hr	Percent in size range			
	Coal	Petroleum	Gas	Dual fuel[a]
<500	43.9	52.6	42.3	41.1
500 - 1500	31.8	35.1	35.0	42.6
1500 - 5000	19.2	11.2	19.3	14.1
>5000	5.2	1.1	3.4	2.2
Total number reported by FPC	1082	537	560	270

[a] Less than 85 percent of energy attributable to one fuel.

is approximately 320 x 10^6 Btu/hr. This plant produces about 33.8 megawatts of electricity (about 10 percent of all the electricity consumed in the EWEB area) and 450,000 pounds of heating steam per hour. It consumes 240,050 tons of wood and bark per year.

Table 4 indicates the magnitude of emissions of particulate matter from domestic industrial boilers.[5] Note that wood-fired boilers are credited with emitting over 10 percent of the particulate matter generated by industrial boilers.

Table 5 gives information on particulate emissions from commercial/institutional boilers in the United States. Wood-fired boilers are charged with about 1.4 percent of the total particulate emissions, a value more consistent with the energy production figures previously cited.

IMPORTANT PROPERTIES OF WOOD FUEL

Wood and bark are of particular interest because they are "renewable" fuels. The production of a growing forest can be optimized, for each species of tree, for harvest as raw material for paper mills, lumber or plywood manufacture, particle or fiber materials, or fuel. If, for example, fuel is to be the ultimate use, a forest should be harvested before the incremental growth rate declines to below the incremental growth rate of the young trees.

Table 4. FLUE GAS EMISSIONS FROM INDUSTRIAL BOILERS[5]

Boiler fuel	Emission factor (calculated), lb/ton of fuel or as indicated	Particulate, 10^3 tons/year		Particulate, percent of total	
		Total	<3 μ	Total	<3 μ
Bituminous coal	13 (wt % ash)	1600.0	65.0	78.5	32.7
Anthracite coal	2 (wt % ash)	6.3	0.1	0.3	0.1
Lignite	6.5 (wt % ash)	35.0	0.7	1.7	0.4
Petroleum	23 lb/1000 gal.	120.0	110.0	5.9	55.3
Gas	10 lb/10^6 ft^3	25.0	23.0	1.2	11.5
Baggase	22	42.0	U	2.1	U
Wood/bark	15	210.0	U	10.3	U
Total		2038.3	198.8		

U = Unknown

Table 5. FLUE GAS EMISSIONS FROM COMMERCIAL/INSTITUTIONAL BOILERS

Boiler fuel	Emission factor (calculated), lb/ton of fuel or as indicated	Particulate, 10^3 tons/year		Particulate, percent of total	
		Total	<3 μ	Total	<3 μ
Bituminous coal	13 (wt % ash)	50.0	1.0	21.6	0.6
Anthracite coal	2 (wt % ash)	21.0	0.4	9.1	0.3
Lignite	6.5 (wt % ash)	0	0	0	0
Petroleum	23 lb/1000 gal.	150.0	140.0	64.8	93.6
Gas	10 lb/10^6 ft^3	9.1	8.2	3.9	5.5
Wood/bark	15	1.4	U	0.6	U
Total		231.5	149.6		

U = Unknown.

Current estimates[3] indicate that reserves of readily collectable and usable wood residue and bark, near present utilization facilities but not now used, are approximately 5 million tons per year in the United States. The total domestic resource generated by all logging and wood usage is estimated at 55 million tons for 1971 and is predicted to be 59 million tons by 1980. These statistics indicate that much potential energy is not being utilized. A large amount is left at the site of harvesting.

Another estimate[5] predicts that the growth of wood-fired energy sources during the period 1973 to 1985 will be on the order of 60 percent while the overall energy increase for the entire nation will be 27 percent. A 60 percent increase over the current estimated usage of 28.3 million tons per year would yield a 1985 usage of 46 million tons per year, an indication that not much unused wood or bark is expected by 1985.

Certain properties of wood and bark as fuel must be considered by the user. The mix of wood residue and bark that is currently fired in boilers is difficult to store, handle, and fire.[6] The following properties are undesirable:

1. It is bulky, requiring large storage areas.
2. It lacks uniformity in particle size, in portions of bark and wood, and in species.

3. Its moisture content is high; some woods cannot support combustion.

4. It deteriorates rapidly.

5. It can undergo spontaneous ignition.

6. Steep flow angle (60 to 70°).

7. It packs and mats in storage.

8. It generates dust when dry.

The advantages offered by wood and bark fuel should be considered also:

1. It is often available near the utilization facility.

2. It is relatively inexpensive.

3. Its sulfur content is low, and its ash content is low relative to that of coal and residual oils.

4. It is a clean fuel in terms of pollutant emissions and is relatively clean to handle and process.

The wood residue fuel currently used in the Pacific Northwest is markedly different from that burned earlier in this century. It is less uniform, and probably wetter. The Eugene Water and Electric Board lists the following properties of an average unit (200 ft^3) of fuel delivered to the EWEB outdoor storage pile:[6]

1. Weight: 3600 pounds (1.8 tons), 18 lb/ft^3.

2. Species: primarily Douglas fir, some hemlock and cedar.

3. Composition: 70 percent bark and 30 percent wood residue, by weight including moisture.

4. Moisture content: 40 percent by weight.

5. Dry weight: 2160 pounds.

The average analysis by dry weight is as follows:

1. Heating value (higher): 9840 Btu/lb or 21,524,400 Btu per unit.

2. Ash content: 1.88 percent.

3. Sulfur content: 0.080 percent.

Because of their relatively small usage compared with that of coal, gas, and oil, wood and bark as fuels have been largely ignored nationwide, as the following items indicate:

1. Even though wood is found in more states than coal, no "wood fuel" lobby is operative in Washington, D.C.

2. The ASTM methods developed for testing of solid fuels were developed for coal rather than wood. When these methods are adopted for testing of wood and bark fuels, results may be unreliable. (Some of the problems are discussed later.)

3. Most published literature dealing with solid fuel mentions only coal. Design of furnaces and boilers for wood fuel combustion is not included in solid fuel technology.

4. Many boilers that have been sold for combustion of wood and bark fuels are not designed for wood fuel firing. Rather, they are designs for coal firing with a few minor modifications in the fuel-feeding systems. As one example, consider a wood-fired boiler installed at Oregon State University in about 1950. The system included an ash pit sized for coal with 15 percent ash, even though the wood residue being burned at the time contained less than 1 percent ash, most of which was emitted through the stack. After a few years, the ash pit was covered because no ashes had ever been removed from the furnace to the ash pit.

5. Methods for testing of stationary combustion sources, such as boilers, are designed for units firing the fossil fuels, oil and coal. As discussed more fully later, some of the characteristics of wood-fired boilers are not amenable to these source testing methods.

USERS OF WOOD-FIRED BOILERS

Utilities burning wood and bark as a fuel are nearly nonexistent today. Until about 10 years ago, several wood-fired boilers in the Pacific Northwest generated electricity and steam for district heating. One large central station in Portland, Oregon operated several different sized steam-generating units, the largest of which could generate 360,000 pounds of steam per hour with Douglas fir as fuel.[4] This station supplied heating steam to a large section of downtown Portland, Oregon. In the mid-1960's this boiler converted to oil as the primary fuel and has not burned wood since. The current escalating costs of oil have led to discussions regarding the feasibility of reconverting this plant to wood residue fuel.

The EWEB operates a public utility steam plant in Eugene, Oregon, described as follows in the abstract from reference 6:

> "Using a solid waste as an energy source is not new to the Eugene Water and Electric Board. The primary fuel used in our steam-electric generation plant is wood-waste from lumber mills in the surrounding area. The plant provides steam for a growing steam heat utility and electric power generation. By using the waste, the municipal utility has contributed significantly to the reduction of local air pollution and solid waste disposal problems..."

In 1972-73 EWEB paid an average cost of $2.46 per unit for wood-waste fuel, equivalent to $0.12 per million Btu. After storage, handling, and some water removal the cost at the boiler was $0.23 per million Btu. The net steam production costs averaged $0.56 per 1000 pounds of steam, and net cost of electrical power generation was 6.8 mills per kWh.[6] With oil as fuel, the costs would have been approximately 5 times greater and with coal, about 3 times greater. Today, all of these costs have approximately doubled.

In 1973, EWEB conducted an extensive engineering and economic survey regarding the feasibility of a new, larger plant that could use both wood residue and municipal waste as fuels.[7] The schematic flow diagram of the proposed plant is shown in Figure 1. The proposed plant would operate four boilers each rated at 405,500 pounds of steam per hour and would consume 1700 units per day of wood waste along with approximately 1000 tons per day of combustible municipal refuse. Because of uncertainties regarding costs and fuel supplies, the plant has not yet been constructed.

Commercial and institutional use of wood and bark as fuels is limited. An example of a practical application is the University of Oregon at Eugene, which operates a wood-fired steam plant that generates much of the campus electrical load and all of the campus heating load through back-

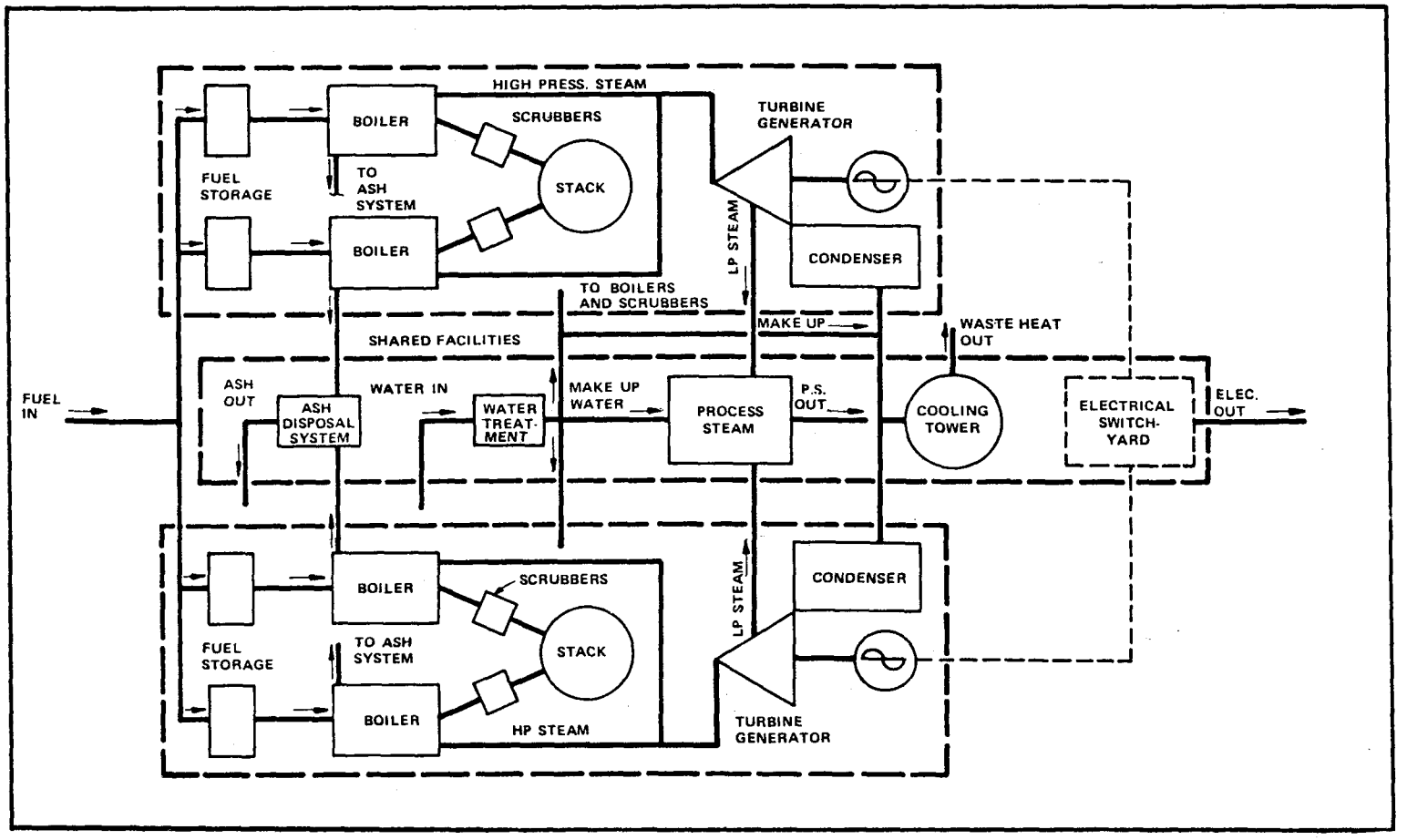

Figure 1. Flow diagram proposed for EWEB expansion[7]

pressure steam turbines. This facility, in operation for several years, is currently heating the Unitersity of Oregon for a net fuel cost that is much lower than that at Oregon State University, 40 miles away and of similar size. In the 1960's Oregon State converted their heating system from firing of wood with oil standby to firing of interrupted natural gas with oil standby.

By far the greatest fuel use of wood residue and bark is by the industries that generate the fuels: lumber and plywood mills, paper mills, and particle board and hardboard mills. These industries originally burned wood residue as a fuel out of necessity. Today they are in an advantageous position as the country works toward the goal of energy independence. These industries can use a relatively low-cost fuel to generate electricity and process steam. In some cases, they can generate a surplus of electricity for sale to an electric utility or for use in the electric system of the "company town." In the Pacific Northwest and other areas the forest products industry has been rapidly installing new wood-burning boilers to replace those that burn oil and gas. In the few years since the fuel "crisis" of 1974 oil prices have tripled, and wood fuel has become so desirable that these wood products industries are saving it for their own use rather than selling it on the open market.

One of the reasons that EWEB had to forego the utility expansion is that local wood product industries, in a period of about a year, completely reevaluated the wood fuel situation and chose to use this fuel themselves rather than sell it.

Figure 2 summarizes the basic ways of using wood fuels directly for energy generation in the form of electricity, process steam, or hot gases. The uses for process steam are summarized in Table 6.

Hot flue gases can be used directly for drying of wood, veneer, or particles. The hot gas may be generated directly by a wood-fired furnace without a boiler, or the boiler flue gas can be used instead of exhausting it through a stack.

DISTRIBUTION OF WOOD-FIRED BOILERS IN THE UNITED STATES

Because wood-fired boilers are traditionally located near the fuel source, most are in the states with large forest products industries. Figure 3 indicates the number of boilers and weight of wood residue consumed in those boilers in each state. The data for Figure 3 were obtained in a mail survey of State air pollution control agencies. For States not replying, the number of boilers was estimated by a linear regression equation based on replies received and on wood usage as reported by Supernant.[5] The data are given as Appendix A. In spite of discrepancies in the data,

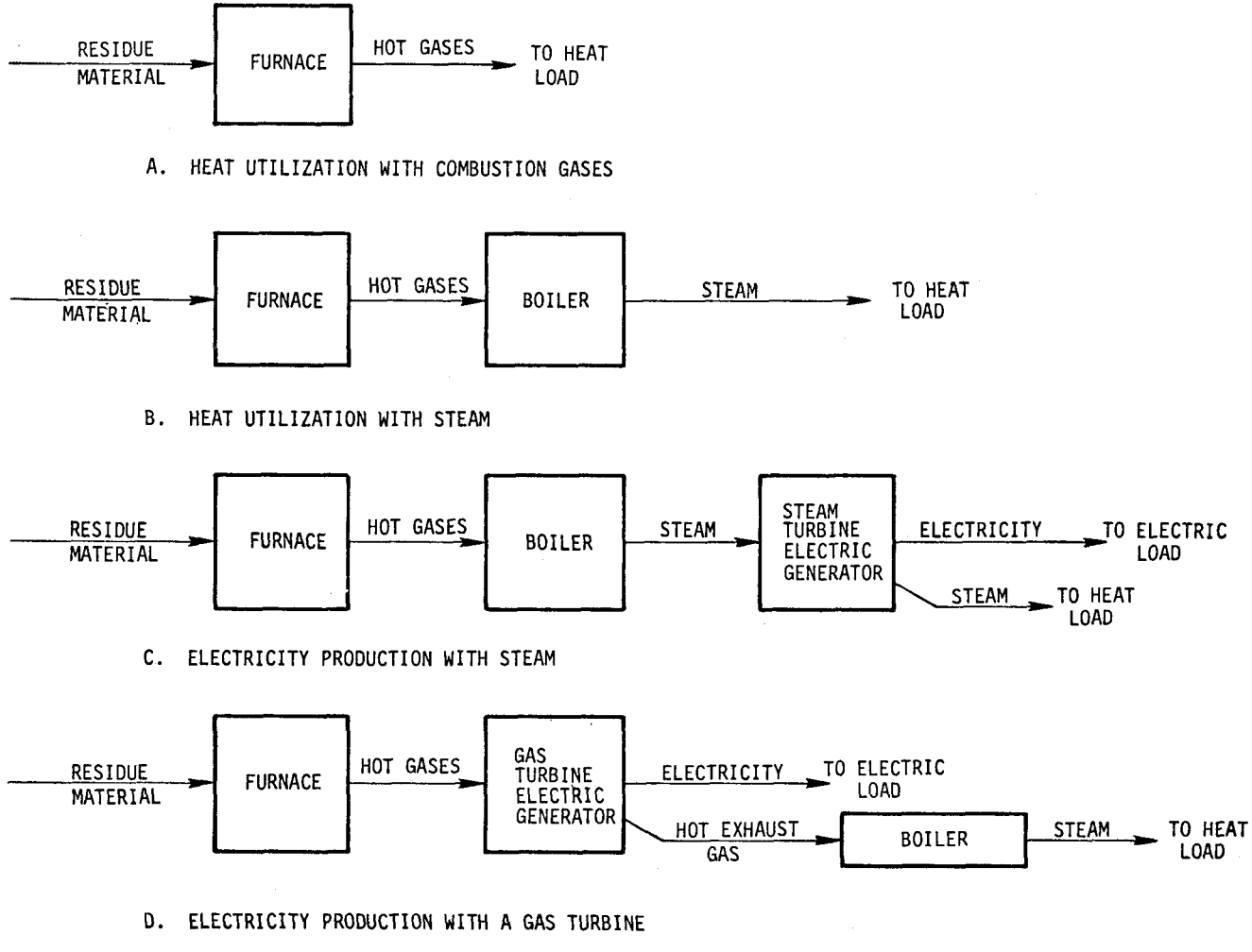

Figure 2. Some methods of energy conversion using direct combustion of residue materials.

Table 6. USES OF PROCESS STEAM IN FOREST PRODUCT MANUFACTURING PLANTS[a]

Type of plant or operation	Use of steam from wood-fired boilers
Dimension lumber	Kilns for drying lumber "Shotgun Carriage" (old but still used)
Plywood mill	Veneer dryers and hot press
Particle board and hardboard	Steam-heated particle dryers Hot press
Paper mill	Digesters and paper machine dryers
Furniture manufacture	Hot presses and wood steaming systems

[a] Heating and hot water for plant and office use assumed for all facilities.

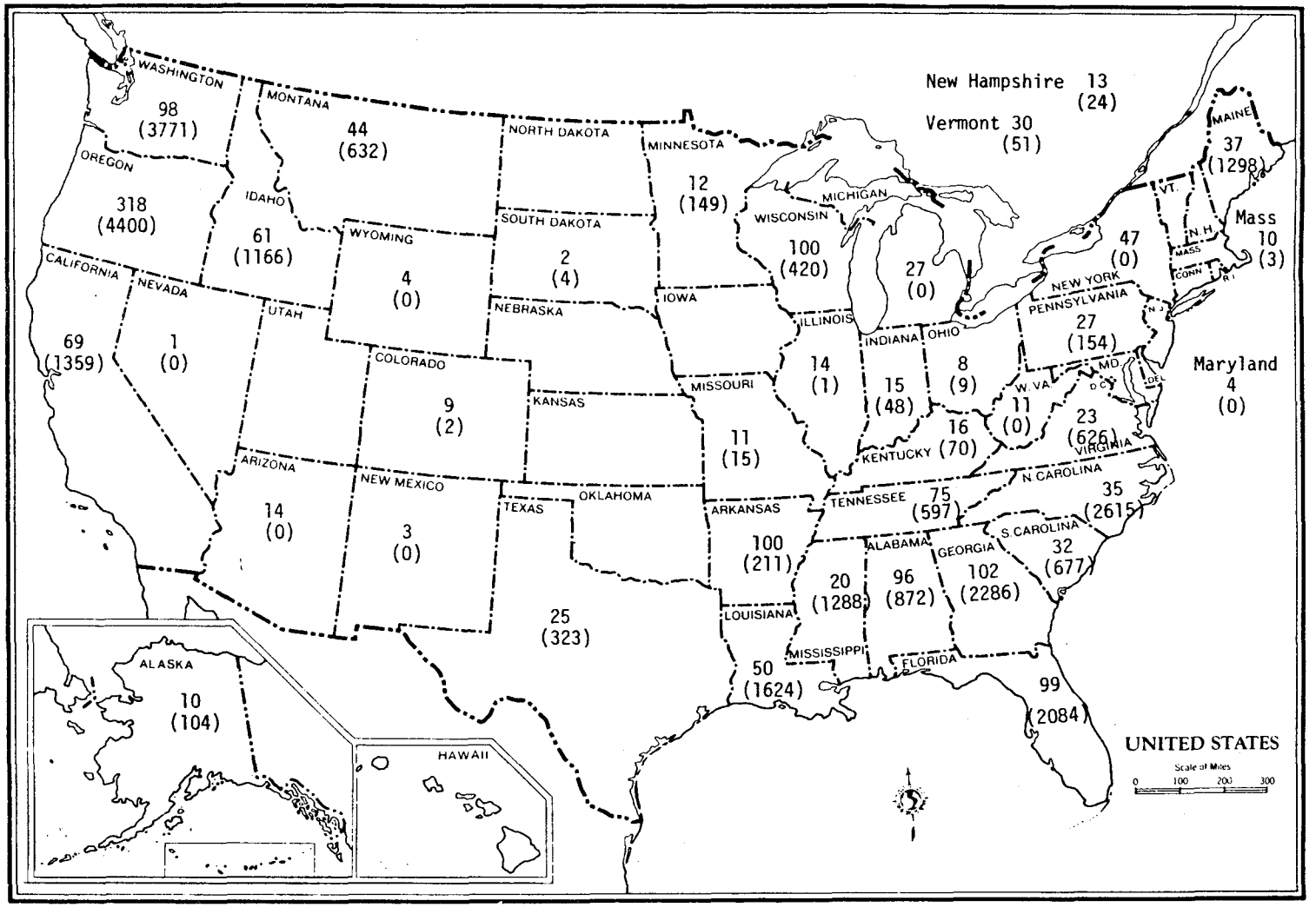

Figure 3. Number of boilers and (10^3 tons of wood burned per year)

blank indicates no boilers.

they are probably as reliable as any that can be obtained. For example, although reference 5 states that no wood is burned industrially or commercially in Arizona or Michigan, Arizona reports 14 wood-fired boilers and Michigan lists 27.

If the predicted trend occurs and conversion of wood residue to energy increases by 60 percent by 1985, most of the growth probably will occur in a few states. These are states having wood resources that are not utilized today, such as Oregon, Washington, Idaho, and northern California. Some of the other states may increase the use of wood for fuel but they do not have enough unused resources to show a doubling in 10 years.

2.0 COMBUSTION OF WOOD

PROPERTIES OF WOOD AS FUEL

The various types of coal and oil have been classified and graded by government agencies, trade organizations, and technical societies. The wood fuels, however, have not been so classified, even though they also exhibit a wide range of combustion properties. For example, stringy cedar bark in large chunks differs greatly from dry, resinous pine sanderdust in the size range of 20 to 40 microns.* To assume that the same fuel handling and burning system can be used for both of these fuels is as unrealistic as assuming that the same systems could efficiently burn both lignite and anthracite coal.

Wood is essentially cellulose and hemicellulose bound with lignen. The cellulose is a natural polymer composed of 49.4 percent carbon, 6.2 percent hydrogen, and 44.4 percent oxygen. In addition to the cellulose and lignen, the wood residue and bark fuels contain resins, inorganics, traces of

---

* One micron, or micrometer, μ, is a standard metric unit of size. It is 10^{-6} meter and is equivalent to 0.039×10^{-3} inch.

sulfur, and bound and free water. To evaluate the use of wood as fuel, it is helpful to understand some important properties.

Species

Although most species of wood can be used as fuel, some species are poor fuels because of problems with handling and poor combustion efficiency. An example is wet cedar bark, which is stringy and difficult to reduce in size. By comparison, dry Douglas fir bark is considered a very desirable fuel. The variability among species is pronounced, even though many species, such as the cedar and Douglas fir, grow together in a naturally mixed forest.

Fuel Size

The size of the individual pieces of wood residue and bark often cannot be controlled by the user. Fuel purchased on the open market can be a mixture of many sizes of bark, coarse wood residues (slabs, trimmings, and endpieces), planer shavings, sawdust, and sanderdust. If all of the fuel is from a single facility or process, it will be relatively more uniform. Table 7 indicates the size ranges of several wood fuels.

Table 7. APPROXIMATE SIZE RANGE OF TYPICAL COMPONENTS OF WOOD FUEL

Component	Size range, in.
Bark	1/32-4
Coarse wood residues	1/32-4
Planer shavings	1/32-1/2
Sawdust	1/32-3/8
Sanderdust	2μ[a]-1/32
Reject "mat finish"	10μ[a]-1/4

[a] Small end of the range is measured in microns.

If the delivered wood or bark is too large for effective firing, the size must be reduced. The usual way to reduce the size of wood and large chunks of bark is with a "hog," a machine designed to reduce large pieces of wood to a fairly uniform size. Originally all wood fuel for mechanical firing was run through the hog; the terms "hogged wood," "hog wood," and "hog fuel" denote material delivered to the boiler. Figure 4 shows a cross section of a typical hogging machine.

If the material must be reduced to a size smaller than the hog provides, it is usually hammermilled for size reduction. Hammermills are often used for treating dry residue (such as plywood trim) or bark directly after the barker.

Moisture Content

The moisture content of fuel is commonly considered on the wet or "as is" basis, and the dry basis. the moisture

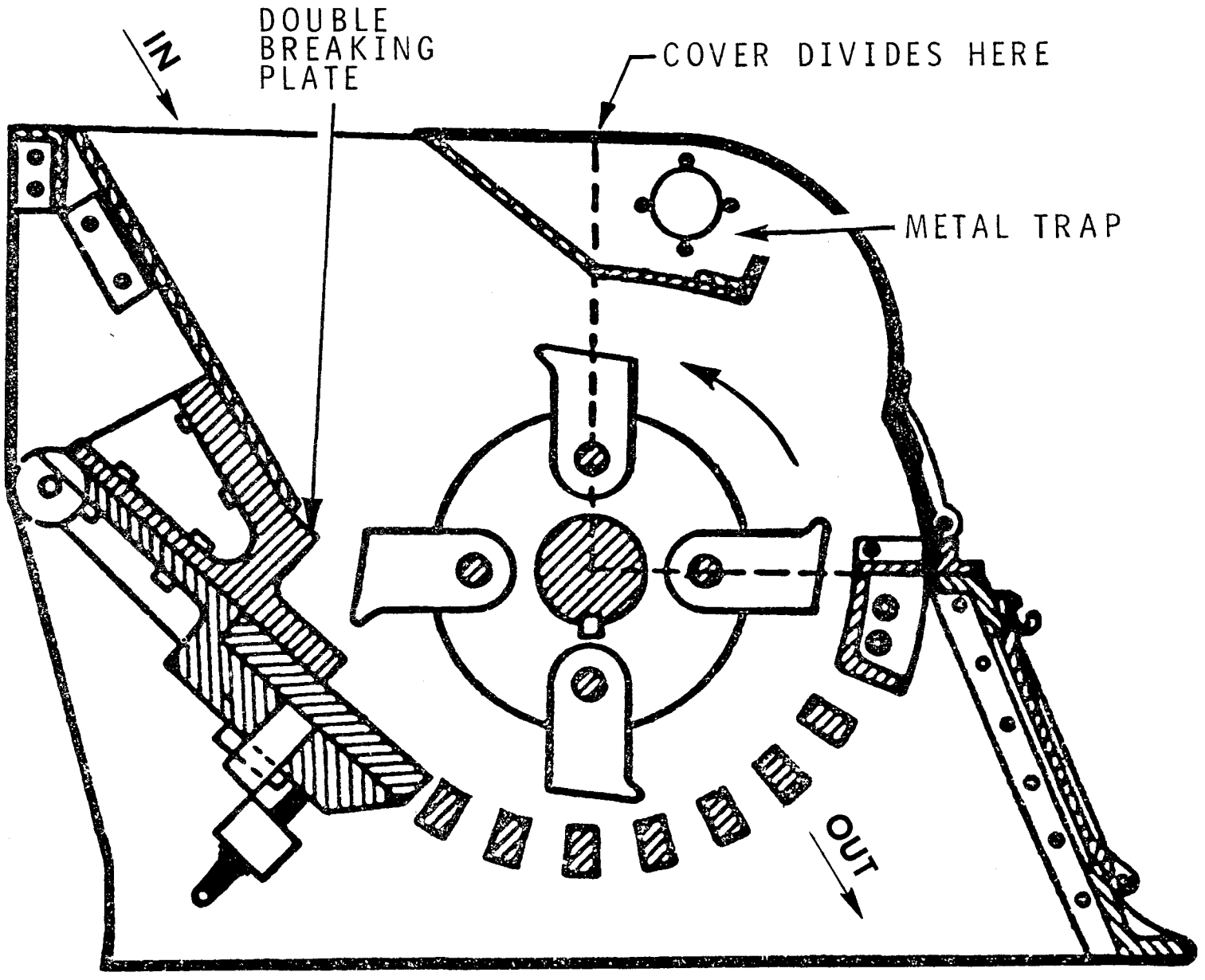

Figure 4. Cross-section of a typical hogging machine.

content on a dry basis is usually expressed as a percentage. The calculation formula is:

$$\text{Percent moisture content (dry)} = \frac{\text{(weight of moisture x 100)}}{\text{weight of dry fuel}}$$

The wet basis is the more common measure of moisture content. For wet-basis determinations, the weight of the moisture in fuel is divided by the total weight of fuel plus moisture, and is expressed as a percentage. Therefore, percent moisture content (wet basis) is equal to (weight of moisture x 100)/(weight of dry fuel plus weight of moisture).

The relation between moisture contents (MC) expressed on a wet and a dry basis is shown in the following equations:

$$\text{MC (wet)} = 100 \times \text{MC (dry)}/[100 + \text{MC (dry)}] \quad (1)$$

$$\text{MC (dry)} = 100 \times \text{MC (wet)}/[100 - \text{MC (wet)}] \quad (2)$$

where moisture content is expressed as a percentage on either a wet or dry basis. The wet basis is used in this report.

Moisture content is significant in combustion for two reasons. First, because it varies over a wide range of values, making control of the combustion process difficult. For example, consider MC of the different components of hogged fuel. The MC values of bark, coarse wood residue, and sawdust normally range from 30 to 65 percent, averaging about 45 percent. The MC depends, however, on time of year,

type of wood (species), and milling process. In contrast, the MC values of kiln-dried planer shavings, sanderdust, and some rejected particle board materials usually range from 4 to 16 percent.

The second significant feature of moisture content is its negative heating value; that is, heat must be consumed to evaporate moisture within the furnace. In some modern combustion systems the fuel is dried outside the furnace to gain greater heat release in the furnace.

Ultimate Analysis

Ultimate analyses determine the chemical composition of fuels. An analysis of the primary components of hogged fuel is shown in Table 8. Ultimate analyses point out three significant features of hogged fuel. First, the constituents vary only slightly from sample to sample. This is important in calculating and controlling excess air for combustion.

Second, the oxygen content of hogged fuel is high. This is significant because the combustion process thus requires little supplemental oxygen from air.

Third, the sulfur content of hogged fuel is so low that combustion of hogged fuel generates relatively little sulfur dioxide, whereas combustion of sulfur-bearing coal or oil causes significant emissions of sulfur dioxide.

Table 8. TYPICAL ULTIMATE ANALYSES OF MOISTURE-FREE SAMPLES OF HOGGED FUEL BARK[8]

(Values in Percent)

Component	Douglas fir	Western hemlock	Avg. of 22 samples
Hydrogen	6.2	5.8	6.1
Carbon	53.0	51.2	51.6
Oxygen	39.3	39.2	41.6
Nitrogen	0.0	0.1	0.1
Ash (inorganics)	1.5	3.7	0.6

Proximate Analysis

The proximate analysis (ASTM Test D-271) gives weight percentages of moisture, volatile matter, fixed carbon, and ash. Because the ASTM D-271 test was originally intended for analysis of coal, certain deviations in test procedure are in order when the method is applied to the more volatile organic materials. Mingle and Boubel[9] have recommended deviations from ASTM procedures in sample preparation and in the times for conducting the individual operations.

Table 9 gives typical values for proximate analysis of different materials. Note the consistently lower volatile content of bark as compared with that of sawdust, regardless of species except for cedar. In general, the volatile content of bark is 10 percent lower.

Table 9. TYPICAL PROXIMATE ANALYSES OF MOISTURE-FREE WOOD FUELS[8]

(Values in Percent)

Species	Volatile matter	Charcoal	Ash
Bark	74.3	24.0	1.7
Hemlock	74.3	24.0	1.7
Douglas fir, old growth	70.6	27.2	2.2
Douglas fir, young growth	73.0	25.8	1.2
Grand fir	74.9	22.6	2.5
White fir	73.4	24.0	2.6
Ponderosa pine	73.4	25.9	0.7
Alder	74.3	23.3	2.4
Redwood	71.3	27.9	0.8
Cedar bark	86.7	13.1	0.2
Sawdust			
Hemlock	84.8	15.0	0.2
Douglas fir	86.2	13.7	0.1
White fir	84.4	15.1	0.5
Ponderosa pine	87.0	12.8	0.2
Redwood	83.5	16.1	0.4
Cedar	77.0	21.0	2.0

The ash content of wood residues is generally low, but still is significant when large quantities are burned. The ash content of bark usually is greater than that of wood because handling and harvesting of logs frequently causes dirt and sand to cling to the bark. Saltwater storage and transport of logs also can add to the ash content by deposition of sea salt in the wood or bark.

Heating Value

The heating value of a solid fuel is expressed in Btu per pound of fuel on as-received, dry, or moisture- and ash-

free basis. The ASTM D-240 test is used to determine the heating value by a bomb calorimeter. As stated previously, the standard solid fuel tests are designed for coal. This test is no exception in that it calls for about 1 gram of fuel. The calorimeter is designed for 1 gram of coal; a gram of wood, even though it is bulkier than a gram of coal, will yield only about half the energy upon combustion. Wood may be blown from the fuel pan because of the bulk and lightness of the sample and the increase in water temperature may be only about half of that produced by coal.

Heating values as determined in calorimeters are termed higher or gross heating values. They include the latent heat of the water vapor in the products of combustion. In actual operation of boilers, however, the water vapor in the waste gas is not cooled below its dewpoint and this latent heat is not available for making steam. The value of latent heat is sometimes subtracted from the higher, or gross, heating value to give the lower, or net, heating value. Lower heating values are standard in European practice, and higher heating values are standard in American practice.

The heating value of hogged fuel depends on two components, fiber and resin.[3] The heat value of wood fiber is about 8,300 Btu per pound, and of resin, about 16,900 Btu per pound. The heating value of woods with more resin,

therefore, is higher than that of those with low resin contents.

Bark generally contains more resin than wood, and softwood bark contains more than hardwood bark. Some typical heating values are shown in Table 10.

Table 10. TYPICAL HEATING VALUES OF MOISTURE-FREE BARK AND WOOD[9]

(Values in Btu per pound)

Species	Heating value	
	Wood	Bark
Douglas fir	9,200	10,100
Douglas fir	8,800	10,100
Western hemlock	8,500	9,800
Ponderosa pine	9,100	
Western red cedar	9,700	8,700
Red alder	8,000	8,410

The properties of wood residues and bark fuels can vary so greatly that a standard specification is not possible. The differences should be recognized and accounted for in the engineering and operation of wood-fueled systems. Table 11 summarizes the analyses for several properties of selected wood species. Appendix B gives detailed information on ultimate analyses, proximate analyses, and heating values for most bark species used as fuels.

Table 11. ANALYSES OF SOME SELECTED WOOD REFUSE BURNED AS FUEL[a,9]

Item	Jack pine	Birch	Maple	Western hemlock
Proximate analysis, percent				
Ash	2.1	2.0	4.3	2.5
Volatile	74.3	78.5	76.1	72.0
Fixed carbon	23.6	19.2	19.6	25.5
Ultimate analysis, percent				
Carbon	53.4	57.4	50.4	53.6
Hydrogen	5.9	6.7	5.9	5.8
Sulfur	0	0	0	0
Nitrogen	0.1	0.3	0.5	0.2
Ash	2.0	1.8	4.1	2.5
Oxygen (by difference)	38.6	33.8	39.1	37.9
Heat value, Btu/lb (bone dry)	8930	8870	8190	8885
Ash analysis, ppm				
SiO_2	16.0	3.0	9.9	10.0
Al_2O_3	6.3	0	3.8	2.1
Fe_2O_3	5.0	2.9	1.7	1.3
CaO	51.6	58.2	55.5	53.6
$CaCO_3$	4.9	13.0	1.4	9.7
MgO	5.5	4.2	19.4	13.1
MnO	1.6	4.6	1.0	1.2
P_2O_5	2.8	2.9	1.1	2.1
K_2O	4.1	6.6	5.8	4.6
Mn_2O	3.1	1.3	2.2	1.1
TiO_2	0.2	Trace	Trace	Trace
SO_3	2.6	3.2	1.4	1.4
Fusion point of ash, F				
Initial	2450	2710	2650	2760
Softening	2750	2720	2820	2770
Fluid	2760	2730	2830	2780
Weight, lb/ft^3 (bone dry)	29	37-44	31-42	26-29

[a] Average moisture of about 50 percent as received at firing equipment. Adapted from information compiled by the Steam Power Committee of the Canadian Pulp and Paper Association.

THEORY OF WOOD COMBUSTION

In simplified terms, combustion is a process in which the components of a fuel containing hydrogen and carbon are chemically combined with oxygen in air to form combustion products and release heat energy. If combustion is complete, hydrogen combines with oxygen to form water vapor and carbon combines with oxygen to form carbon dioxide. In practice, small amounts of carbon monoxide, hydrocarbons, and other gases are usually formed. The noncombustibles form an ash, which must be removed from the combustion chamber and sometimes from the product gases.

The combustion of all solid fuels is a three-step process. First, the free water is evaporated, a process that requires heat (endothermic process).

Next, the volatile component of the fuel is vaporized, or destructively distilled; this process also requires heat (endothermic) and as these vaporized gases combine with oxygen heat is released (exothermic). The term "vaporized" does not accurately describe what occurs during this process. The atoms and radicals are separated from the carbon rings, then the atoms and radicals are reformed to stable elements and compounds. These cracked and reformed elements and compounds undergo complete or partial oxidation in space above the original material, if oxygen and sufficient ignition energy are present.

In the third combustion step, the remaining carbon - called fixed carbon, charcoal, or char - undergoes partial or complete oxidation at high temperatures, forming carbon monoxide or carbon dioxide when oxygen is supplied under proper conditions. The carbon oxidizes directly from the solid state rather than changing to a vapor and then oxidizing, as in the second step. The third step is exothermic, since heat is released in the process.

The principal characteristics of wood fuels are high contents of moisture (usually), volatile matter, and oxygen. About four-fifths of the fuel on dry basis comes off as volatile matter and must be burned in the furnace space above the grates. Only one-fifth is fixed carbon, which must be burned on the grate.

The material remaining after combustion is ash, a noncombustible material that must be disposed of. Some of it collects in the furnace, while the remainder leaves, as solid particulate, with the flue gas.

PRACTICAL ASPECTS OF WOOD COMBUSTION

Combustion theory is extremely complex; moreover, the combustion of wood in a furnace does not always follow theory. Practical usage requires the addition of some empirical constant to the theoretical equations. Much practical information concerning operation of wood-fired

furnace-boiler systems can be obtained from firemen who may not know the theory of wood combustion.

An example of this is the use of excess air as an aid to combustion. Excess air is defined as that air exceeding the theoretical amount necessary. Unless about 50 percent excess air is provided for combustion of wood or bark fuels, the boiler may emit black smoke, an indication of unburned carbon from incomplete combustion. Provision of too much excess air causes the furnace to cool and perhaps to emit smoke. Thus, the proper amount of excess air is important. Although a manufacturer may suggest a level of excess air for operation of a new boiler, the operator should experiment at levels around the suggested value to obtain optimum combustion.

The amount of excess air is usually determined by analyzing the flue gases with an Orsat flue gas analyzer or similar device. A graph, as shown in Figure 5, is then used to determine the percentage of excess air.

Another value that must be considered in operation of a wood-fired boiler system is the "turndown," which is defined as the ratio of the rated capacity of the boiler to the minimum load that can be carried without losing the fire. If, for example, the maximum rating of a boiler if 60,000 pounds of steam per hour and the minimum load that can be

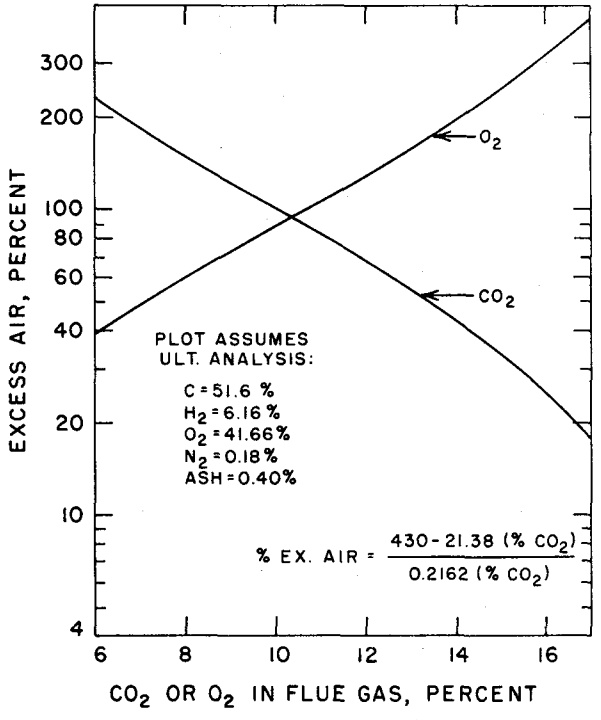

Figure 5. Relation of excess air to percentage of oxygen and carbon dioxide in flue gases[8]

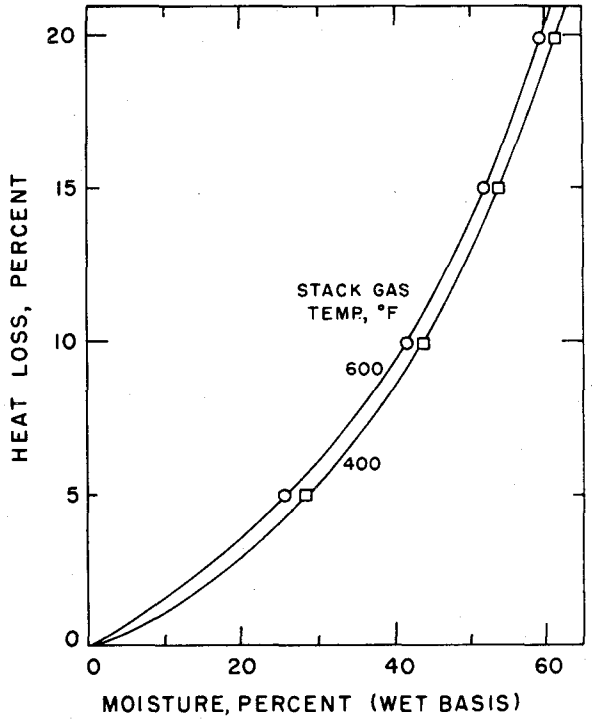

Figure 6. Relation of heat loss to moisture content of Douglas-fir bark[8]

maintained is 15,000 pounds of steam per hour, the turndown is 4/1. A variety of factors such as fuel type, fuel moisture, and altitude can affect the turndown ratio.

Moisture

Addition of an overly moist fuel will extinguish a fire. Lesser amounts of moisture may still allow combustion but at reduced boiler efficiency. Figure 6 illustrates the loss of heat energy with increasing fuel moisture.

Figure 7 illustrates a drop in steam production with increased moisture until the fire is extinguished at about 68 percent moisture (about 2 pounds of water per pound of dry fuel).

The water-vapor content measured in flue gases from hogged fuel boilers ranges from about 6 to 32 percent by volume. In burning of hogged fuel with an average moisture content of 45 to 50 percent by weight, the water-vapor content of the flue gas in the stack will be about 20 percent by volume. This value varies with moisture content in the fuel, relative humidity of the air, and percentage excess air. If these variables can be measured, the percentage of moisture in the flue gas can be calculated rather than measured (obtaining values for relative or specific humidity is difficult at 400°F).

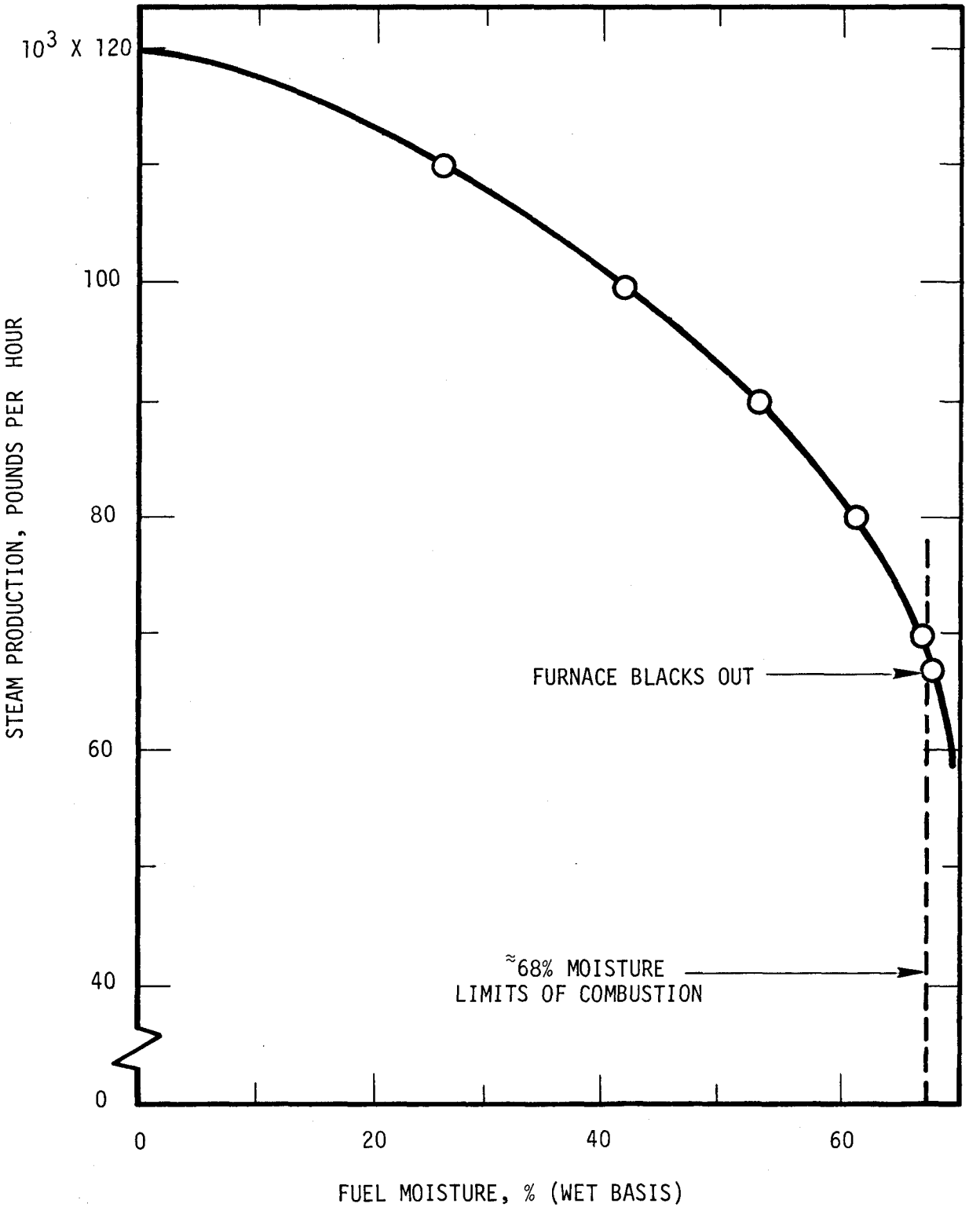

Figure 7. The effect of fuel moisture on steam production as reported by Johnson[10]

Water is not measured by an Orsat gas analyses, even though it is a normal component of flue gas. The Orsat instrument passes the gas through a water bottle at ambient temperature, and the moisture in the flue gas is condensed.

Ash Composition

Table 11, listing the ash compositions of jack pine, birch, maple, and eastern hemlock as reported by the Canadian Pulp and Paper Association, shows ash concentrations ranging from 2.0 to 4.3 percent. Table 9, reporting ash concentrations of western woods and bark, shows ash in sawdust ranging from 0.1 percent to 2.0 percent and ash in bark ranging from 0.2 percent to 2.5 percent. Apparently the western fuels contain less ash than the Canadian fuels.

Brown[6] reports the ash concentration of the average fuel burned in the EWEB boilers as 1.88 percent. Table 12 lists the analysis of the EWEB ash. The composition of the ash shown in Table 12 is all inorganic materials, although in practice, it is usual to find 10 percent to 50 percent organic, combustible material in fly ash and in ash removed from the grates. The disposition of these combustibles in the ash is discussed in Section 4.

Table 12 shows that the ash contains calcium, sodium, magnesium, and potassium. These metals may be combined with chlorine in the form of the salts or they may occur in their

Table 12. ANALYSIS OF ASH FROM HOGGED WOOD-WASTE FUEL[6]

Spectrographic analysis	Concentration, ppm
Silicon (Si)	19.6
Aluminum (Al)	3.6
Calcium (Ca)	2.9
Sodium (Na)	2.1
Magnesium (Mg)	0.8
Potassium (K)	0.3
Titanium (Ti)	0.1
Manganese (Mn)	0.016
Zirconium (Zn)	0.006
Lead (Pb)	0.003
Barium (Ba)	0.010
Strontium (Sr)	0.002
Boron (B)	0.003
Chromium (Cr)	Less than 0.001
Vanadium (V)	Less than 0.001
Copper (Cu)	Less than 0.001
Nickel (Ni)	Less than 0.001
Mercury (Hg)	Nil
Radioactivity	Nil

oxidized form. The salt content of the fuel, and hence of the ash, is primarily a function of whether the fuel is from logs stored in salt water. Combustion Engineering reports problems associated with storage of salt water.[4]

> In some instances, water-borne logs are formed into large ocean-going rafts and towed to mills located along the coast. En route they pick up considerable quantities of salt, barnacles, and other marine growths. The character of the foreign matter, and the extent to which it is present in the wood-fuel will have considerable bearing on the design of furnace, as well as on the arrangement of heat-absorbing surfaces. Thus, it is of utmost importance to know whether the fuel comes from salt-water or fresh-water logs because plants burning the former are limited in the capacity at which the boilers can be operated, owing to:
>
> a. Salt that is contained with salt-water logs.
>
> b. Shells that are calcined to calcium oxide and act as a flux on the boiler brickwork.
>
> c. Low-fusion-point and cementing properties of ash that plugs gas passages, particularly when tubes are closely spaced.

Burning of salt-water logs generates emissions of highly visible particulate with the flue gas. The salt particles do not burn and are small enough (0.5 to 1.0 μ) to escape the boiler and form a high-opacity plume.

Among the other inorganic materials in the boiler ash reported in Tables 11 and 12 only lead, at less than 0.003 ppm would be considered toxic. This is in sharp contrast to coal ash, which contains several toxic components.

COMBUSTION OF WOOD WITH AUXILIARY FUELS

Approximatley half of the wood-fired boilers in the United States incorporate no provision for auxiliary fuels. These boilers are totally dependent on wood for maintaining steam output. If the flow of wood is interrupted or the fuel is too wet to sustain combustion, the fire will cease and the system must be shut down. Most of these systems operate satisfactorily under these constraints.

The other half of the wood-fired boilers depend on one or more auxiliary fuels for continued operation. Auxiliary fuels are used for four principal reasons.

1. The furnace-boiler system may be unable to produce the required energy on wood alone. In these cases auxiliary fuel may be used to support combustion.

2. The supply of wood may be limited or may be interrupted; for example, a failure of the conveying or firing system may require us of an auxiliary fuel while repairs are completed. (Repair of a broken conveyor belt in a bucket elevator may require as long as 24 hours.) Burning an auxiliary fuel permits continuous steam generation during repairs.

3. Occasionally wood fuel may be so wet that an auxiliary fuel is required to support combustion and maintain boiler pressure. A furnace such as that in Figure 7 would need an auxiliary fuel if the fuel moisture reached 68 percent. At 50 percent moisture it would need an auxiliary fuel to produce more than 80 percent of its rated capacity of 120,000 pounds of steam per hour.

4. A large boiler may have steam-driven turbines for the forced draft and induced draft fans. The boiler can reach pressure from a cold start by using gas or oil as an auxiliary fuel with small, electrically driven fans.

Wood/Oil

Many of the larger wood-fired boilers in operation today were built in the first 10 years after World War II. During this period the wood products industry expanded rapidly and many mill operators recognized the need for boiler capacity. At that time residual or bunker oil was very inexpensive and was considered an ideal auxiliary fuel. At many mills gas lines were not extended to the property line and the mills were not situated near supplies of coal. The only choice of auxiliary fuel was oil.

The heavy oil is fired into the boiler through mechanical atomizing burners or steam-atomizing nozzles. The oil must be kept heated so that it does not congeal in the tank, lines, and burners. In a well-designed system, the changeover from wood fuel to oil can be accomplished in a few minutes. The oil flame has about the same characteristics as the wood flame, and the system adapts itself to control with only minor adjustments.

Use of oil as an auxiliary fuel entails some disadvantages:

1. The rapid increase in the price of oil is an inducement to use as little oil as possible. Today it may be more economical to spend additional capital for fuel-drying facilities than to rely on oil to help dry the fuel within the furnace.

2. Burners of oil in combination with wood may cause fluxing of any refractory surfaces in the furnace and thus increase maintenance requirements. It is advisable to burn either oil or wood, and not to burn them concurrently.

3. Some residual oils contain high percentages of ash. Combustion of oil with an ash content greater than that of the wood for which the boiler was designed will tend to overload the air pollution control equipment. Many boilers produce no plume when wood is fired but show a highly visible plume when oil if fired.

4. Residual oils may contain a high percentage of sulfur, as high as 4 percent. When this oil is fired, a boiler may emit more SO_2 than regulations allow. Most states now limit the amount of sulfur permitted in residual oil to 2 percent or less (Oregon will not allow sale of residual oils with sulfur content exceeding 1 3/4 percent).

Wood/Gas

In some areas natural gas is used as auxiliary fuel with wood-fired boilers. The natural gas requires no transportation, storage, or handling. A gas burner is a simple device, and a boiler can be switched rapidly to the auxiliary fuel. Some problems occur because the luminosity of the gas flame is different from that of the wood fuel flame. Several, properly placed gas burners are required for proper firing. Also, many additional controls are required for "safe handling" of natural gas.

Some boilers use propane or other liquified gas for auxiliary fuel. Such fuels are clean and readily available.

The prices of liquified petroleum gases and natural gas have risen repidly in the past few years. If natural gas is

sold on an interruptible basis, it may be in short supply and at a high cost when needed most.

A recent innovation at wood-fired power plants is to use the boiler as an afterburner for gaseous contaminants from other operations in the facility. Both veneer dryers and particle dryers may be vented to the boiler through heated lines to prevent condensation of the organics. Although the heating value of these hydrocarbons is probably minimal, such arrangements should be considered in view of the need for pollution control.

Wood/Coal

Using coal as an auxiliary fuel is advantageous in that the coal is a solid fuel, such as the wood, and it may be cheaper than other auxiliary fuels. Many other factors indicate that coal is an undesirable auxiliary fuel:

1. Ash or sulfur contents may be high compared with those of the wood or bark fuel. Combustion and flame properties of a low-ash, low-sulfur coal (such as anthracite) will be greatly different from those of the wood fuel.

2. The coal will probably be delivered to the boiler by the same conveyor-feeding system as the wood fuel. If the conveyor or feeding system fails, no fuel will be supplied to the boiler.

3. Even though coal and wood are both solid fuels, the density differs greatly. A system designed to handle wood can fail if subjected to heavier loads because of more dense fuel.

4. Many areas where wood is plentiful are remote from coal fields. The cost of shipping large tonnages of coal 1000 miles or more may increase the total cost of this fuel above that of oil or gas.

5. The ash content of subbituminous coal may be as high as 30 percent. This can cause serious problems unless the ash removal and handling systems are designed for fuels of high ash content.

6. The coal may be wet, nearly as wet as the wood. Moisture is not a problem with gas or oil auxiliary fuels.

7. Coal requires cleaning, sizing, and screening equipment that is not suitable for wood fuels.

8. Coal tends to form clinkers in the furnace.

9. Rail cars for coal shipment may be in short supply.

10. The environmental impact of mining the coal may be serious.

Wood/Solid Wastes

Some wood-fired boilers are being fired with relatively small amounts (10 to 20 percent) of classified solid refuse. The Georgia Pacific paper mill at Toledo, Oregon, recently considered a contract to buy the combustible portion of air-classified municipal refuse from Lincoln County, Oregon. The paper mill would fire the combustible refuse in their power boilers, along with wood residue and bark fuel, for process steam generation. The EWEB is considering similar use of classified municipal refuse in their boilers.

Combined Systems Using Multiple Fuels

Some mills are operating new furnaces that allow combustion of multiple fuels. Consider a refractory chamber

connected to a boiler. The chamber can handle wood fuel, pulverized coal, gas, or oil or any combination of these. This type of combustion chamber is called an "energy cell." The major problem seems to be that such "energy cells" require a compromise and do not fire any one fuel in a way that maximizes efficiency or minimizes pollution. A wood-fired furnace designed to fire a certain species, of a certain size, at a certain moisture content is much more efficient than an all-purpose "energy cell."

3.0 PROCESS DESCRIPTIONS

To release the heat energy of wood residues and bark in a boiler it is desirable to maximize the efficiency and utilization of fuel while minimizing pollution, complexity, and maintenance costs. A specific combustion system may very well represent a compromise among these desired objectives. It is critical that all components of the system (fuel handling, firing, ash removal, pollution control) be suited to the available fuel, or alternatively, that the fuel be selected to suit the available system. Johnson[3] states that more than 40 types of burner systems alone could be used for firing wood or bark. Complete boiler systems range from "off-the-shelf" units, to package systems, to units that are custom engineered and constructed, costing many millions of dollars. This section describes some of the major components of wood-fired combustion systems: handling and storage facilities, furnace and boiler units, instrumentation, and process controls.

WOOD HANDLING AND STORAGE SYSTEMS

Because of the diversity of the wood fuels available today, the fuel handling systems must be designed for a

specific fuel or combination of fuels. Provisions must be made for receiving or handling, storing, drying or cleaning, sizing, and eventually delivering the fuel to the furnace at the proper rate. Ideally, these operations are geared for the handling and treatment of specific types of wood fuels.

Hogged Fuel

Hogging of wood residue and bark usually is done at the point of generation because it is easier to handle and transport the hogged fuel than the large chunks of wood or bark. The fuel delivered to the power plant may need additional classification and sizing before it is fired. Figure 8 depicts the system used at the EWEB power plant.[6] The fuel is originally stored outside because of the small capacity of the covered storage. Fuel is drawn from the covered storage by remotely controlled conveyor systems to fill each boiler's overhead bin as needed. These controls are mounted on the boiler console for operation by the boiler operator. Each wood-waste-fired boiler is equipped with a set of feed controls with monitoring TV cameras and meters.

Figure 9 shows a more general system for handling of hogged fuel as described by Junge.[8] In practice, final storage in a fuel house or covered bin would be desirable.

Experience has shown that Btu content of hogged fuel can be reduced substantially during storage for long periods

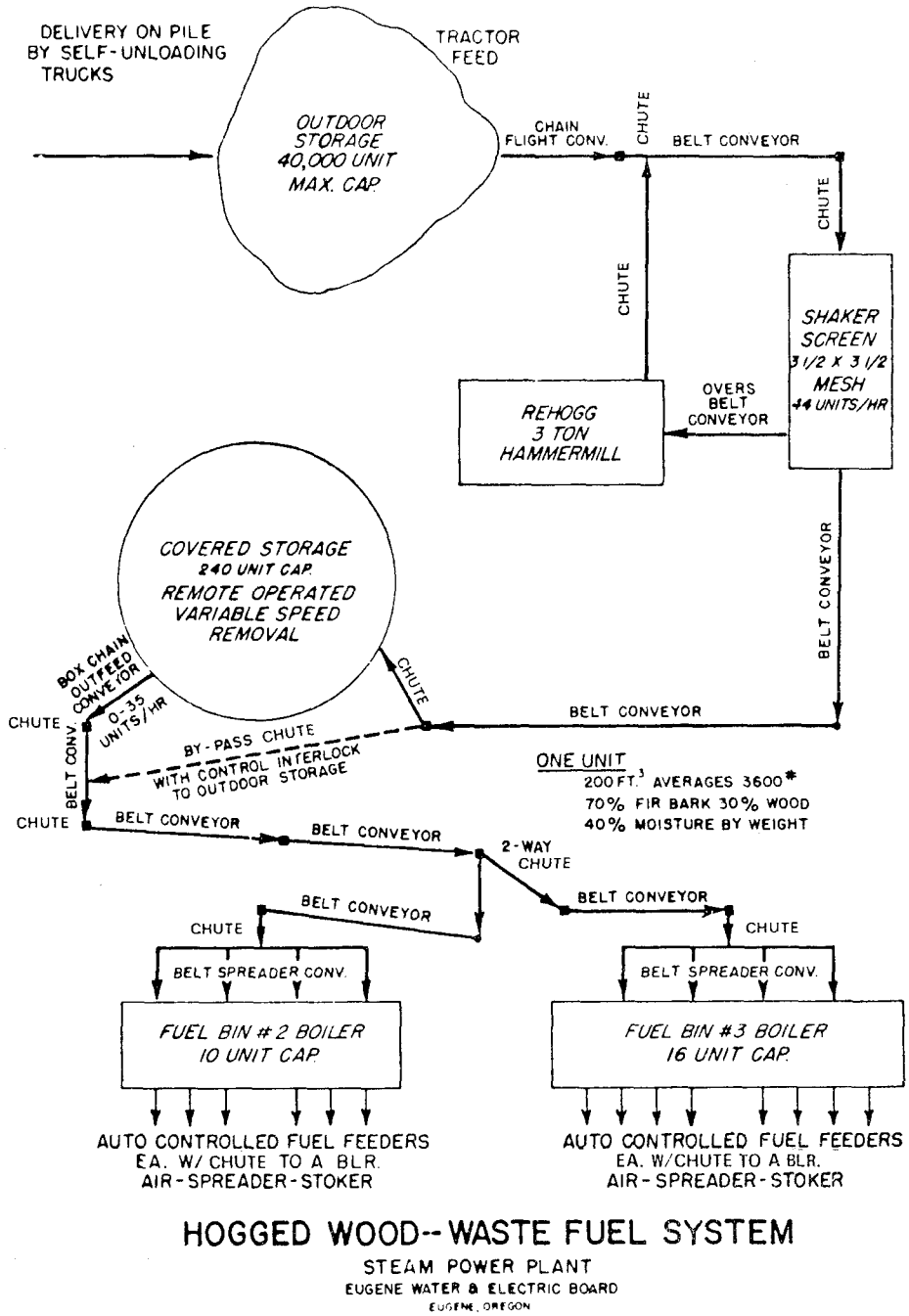

Figure 8. Hogged wood-waste fuel system.

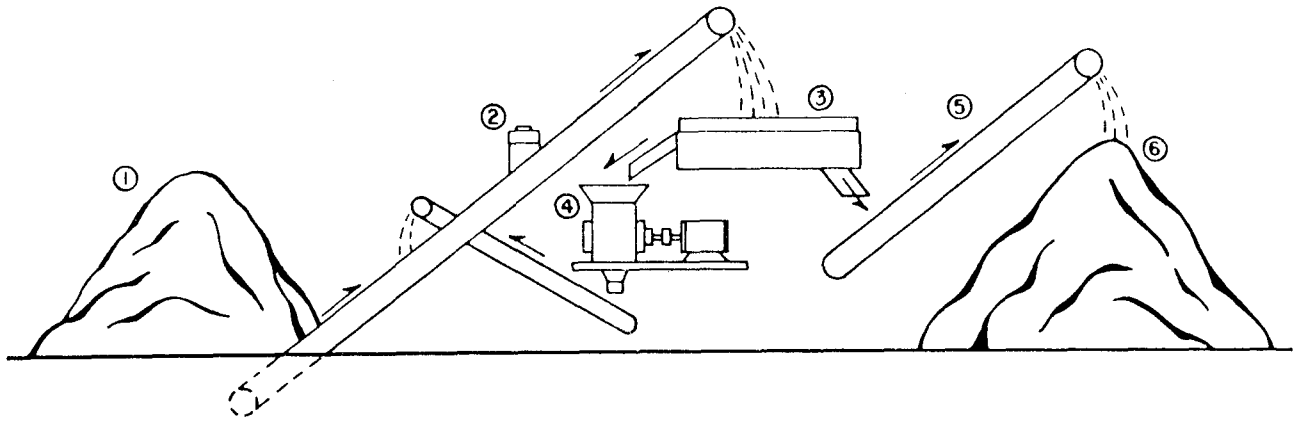

Figure 9. System for preparing hogged fuel.

1. Pile of rough fuel.
2. Metal detector.
3. Separating screen.
4. Hog for pieces too large to pass through the separating screen, with conveyor to recirculate hogged pieces.
5. Conveyor for material that passes through the separator screen.
6. Storage for hogged fuel.

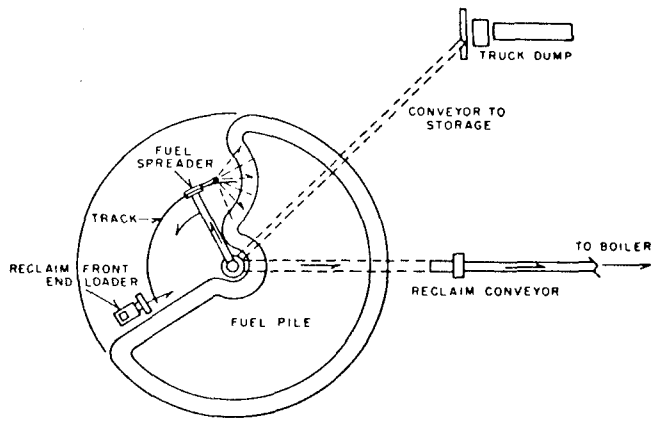

Figure 10. System to limit fuel-storage time by insuring that fuel first into storage will be first out to be burned. (Rader Pneumatics Company, Portland, Oregon.)

at high moisture levels. According to one study, hogged Douglas fir lost 7 percent of its initial heating value over 10 months.[7] As a rule of thumb, hogged fuel should not remain in a pile more than 3 or 4 months.

A first-in, first-out system for fuel storage is effective in limiting storage time. For most plant sites, this would require addition of, or modification of conveyor systems. Figure 10 illustrates one such scheme for fuel storage.

Sawdust

Sawdust is the wood fiber removed by saws during cutting. The ash content is low because it is mostly white wood, not bark. Size of particles ranges from 1/32 to 3/8 inch depending on the saw, the wood species, the direction of cut, and other factors. Moisture content is the same as that of the original wood, 25 to 50 percent on a wet basis, but sawdust can be dried more readily because of its relatively high surface-to-volume ratio. Sawdust may be transported by mechanical conveyor systems or pneumatic systems. Although it can be fired separately, it usually is blended with the hogged fuel either in the storage system of in the fuel feed system just ahead of the furnace. Because it is smaller than the hogged wood, the sawdust settles toward the bottom rather than remaining uniformly distributed throughout the fuel pile.

Shavings

Shavings are generated during the manufacture of dimension lumber when rough-sawed wood is planed to its final size. Since the wood is dried or seasoned before it is planed, the moisture content of shavings is low, 10 to 20 percent on a wet basis. The shavings are flat (like cornflakes) with dimensions of about 1/32 by 1/2 by 1/2 inch. Thus these particles also have a high surface-to-volume ratio. Shavings are transported almost exclusively by pneumatic systems, usually terminating in a cyclone that drops the shavings into a bin or directly into the furnace feed system. Shavings are desirable as raw materials for particle board and hardboard and are used for fuel only in areas where their use for board products is not economical because of long transportation distances.

Chips

Wood chips are seldom used as fuel unless supplies of hogged wood and bark are not available. A paper mill chip is about 1/2 to 1 inch on a side and about 1/8 inch thick. Except for size, their properties are similar to those of hogged wood. Chips are an excellent fuel, and even though priced at 5 to 10 times the price of hogged wood they may be less expensive than an energy-equivalent amount of oil. Chips are nearly always transported by a pneumatic system with a cyclone as the terminal separation device.

Sanderdust

Sanderdust is generated by high-speed sanding of plywood or particle board. Some is also generated by a relatively new abrasive planer that is used to finish dimension lumber. Sanderdust is extremely dry, and the particles are very small (less than 1/32 inch). Moisture content ranges from 2 to 8 percent on a wet basis. Because this material may be explosive, it should be handled and transported with utmost care. Sanderdust is transported pneumatically. The terminal cyclone may require a baghouse downstream to comply with air pollution control regulations. If sanderdust is to be used as fuel in either a boiler or a dryer, it is stored in a bin before firing. In operations that attempt to burn the sanderdust directly from the process, without a surge bin, problems may occur with "puffs" and "flame-outs" or even explosions.

Particle Board and Hardboard Residue and Trim

Particle board and hardboard are made of wood fibers, usually mixed with resinous materials and pressed into the product form. Trim, sawdust, sanderdust, and reject fiber from these processes provide an excellent, dry fuel for wood-fired boilers. This material may be finely divided and should be handled with the same care as sanderdust. Since it may contain various quantities of resin, this should be

evaluated in terms of fuel characteristics and possible effects on furnace and boiler. Particle board and hardboard residues are usually handled by pneumatic systems with surge bins ahead of the boiler feeding system.

Mixtures of Wood Residue

As mentioned earlier, an ideal system is designed to operate with one type of fuel. A furnace designed for hogged wood will not burn sanderdust efficiently. In some systems, "energy cells" are used to burn various types of fuel to generate hot gas, which then passes to and through a boiler. Such systems require careful control to achieve satisfactory, pollution-free combustion.

Different types of wood residue fuel are sometimes mixed before feeding to the furnace. An example is the mixing of dry sanderdust with wet hogged fuel or bark. The sanderdust absorbs water, which makes it less explosive, and the hogged fuel is dewatered, which makes it more combustible.

Predrying Systems for Fuel

Systems for predrying wood residue and bark fuel are relatively new. They were developed to overcome two serious shortcomings of wood fuel. The first problem is the extreme variability in moisture content of hogged wood, sawdust, bark, and even other "dry" fuels. The moisture content is affected by species, handling, storage conditions, and

similar factors. Drying the fuel outside the furnace allows both manufacturers and operators to deal with a more uniform fuel.

The second reason for predrying of the fuel is to put the fuel into the furnace with a minimum of water present. This increases both the thermal efficiency and steam-generating capacity of the boiler. The fuel can be ignited more readily, since the energy needed to evaporate water can now go to volatilization of combustibles. The boiler responds more rapidly with drier fuel. The elimination of gaseous water from the flue gas reduces both the gas volume and the corresponding gas velocities. Thus, smaller fans can be used, and particulate carryover is reduced.

Fuel moisture may be controlled by several methods:[8]

1. Vibrate "loose" water off the fuel on a shaker screen.
2. Press out water mechanically.
3. Drive off moisture by heating the fuel in dryers.
4. Cover the fuel storage pile to exclude rain water.
5. Control the processes that generate the fuel to limit water addition.
6. Mix the fuel to provide a fuel of uniform moisture content.

Each of these moisture-control methods has limitations. Removal of water by vibration may be effective when the moisture content exceeds 55 percent. If the process that

generates the wood adds large quantities of moisture (for example, hydraulic barking), vibration can be an inexpensive and low-maintenance approach to control of surface moisture.

Presses can remove only limited amounts of moisture. For most hogged fuel, pressing can reduce moisture levels to 50 to 55 percent. Heating the fuel can reduce moisture content. Moisture levels in a range from 25 to 35 percent are usually adequate for good combustion. At levels below 20 percent, significant dust problems can occur with "fines."

Heating-type dryers have the potential for generating pollutants of three types: if the wood fuel is overheated (above 300°F) the volatile organic material will evaporate and leave the dryer with the exhaust gas stream, which may condense in the atmosphere to form a visible plume; dry "fines" may create a dust problem; and, if the dryer is fired by a separate combustion system, products from the combustion process may become pollutant emissions.

Covering the fuel storage will keep rain off the fuel, a significant benefit in wet climates. The disadvantages lie in cost of the structure and restriction of access to the fuel pile in event of a fire. If fuel is put through a drying system, particularly one that reduces moisture levels to less than 45 percent, covered storage of the dried fuel may be desirable.

Control of water additions to fuel in production processes is usually difficult. For example, most plants cannot replace hydraulic barkers with mechanical barkers. A trend toward dry-deck log storage and sorting rather than ponding of logs can reduce moisture levels in wood residues. Careful inspection of the processes that generate wood residues may indicate other sources of water addition that can be controlled.

Adequate fuel mixing can be accomplished by spreading fuel across the face of a pile and removing the fuel from a central pick-up point. As noted earlier, mixing brings about uniformity in both size and moisture content and thus enhances the stability of the combustion process.

Three systems are currently being considered for drying fuel outside the furnace-boiler system. These systems can be operated with separate burner systems (fired with sander-dust or other fines) or by directing boiler flue gases from the stack to the fuel dryer. Use of stack gases puts the drying system in series with the boiler; thus a fuel dryer breakdown interrupts the feeding of dry fuel to the boiler and a boiler breakdown shuts down the fuel dryer. These and many other factors must be considered with respect to external fuel drying. A competent consultant should be engaged in early stages of process planning. Following are descriptions of the three major external drying systems.[3]

1. "Hot-Hog" System

In the hot-hog system (Figure 11), wet material is fed at an even rate to a grinder or hog that also can accept high-temperature gas. Breaking up the material exposes large amounts of surface area and makes it easy to drive off moisture. The power of the hogging and the tremendous turbulence facilitate drying of the fuel material. Within seconds, it becomes a fine, dry material, ready for storage. A word of caution is that white wood is more difficult to process than bark.

A classifying system above the hog returns oversize material to the hog for regrinding. The vent from the low-efficiency (first) cyclone should contain the fines and dirt. A high-efficiency (second) cyclone receives the dirty gas stream. Fines are separated and returned to the heater system for reburning. Moisture and combustion gases are vented after the second cyclone. Recirculation of part of the gas stream provides fuel savings and reduces emissions of gas to the atmosphere.

The dry fuel is also fuel for the heater. The air heater incorporates a skimmer system, which removes any large particles of unburned material. Hot gas goes back to the hog to complete the cycle.

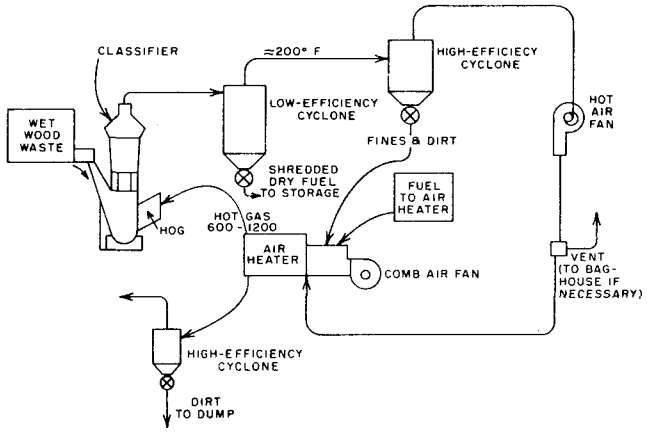

Figure 11. Typical hot-hog dryer system.

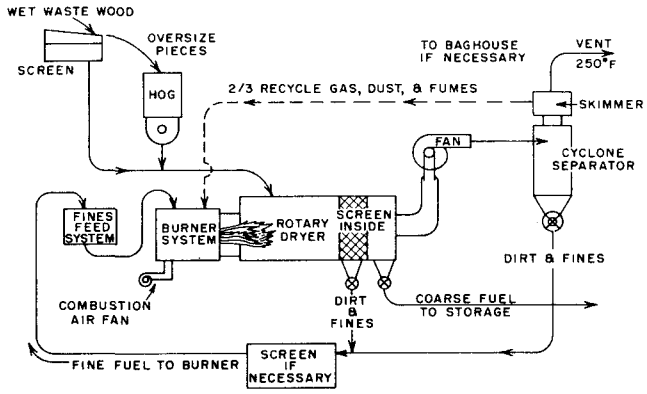

Figure 12. Typical rotary dryer.

2. Rotary Dryer System

A rotary dryer system (Figure 12) is best used for drying a large quantity of wood waste with high moisture content. This system can accommodate high inlet temperatures (up to 1800) if the moisture content of the fuel is high enough to absorb the available heat energy without overheating the wood surface. Overheating the wood would cause some distillation of volatiles, which contribute to the "blue-haze" problem.

Wet fuel should be screened and the oversize pieces rehogged. Long residence time (10 to 20 minutes) permits drying of 2- to 4-inch pieces without difficulty.

A particular advantage of the rotary dryer is the opportunity to effect a three-way internal separation of fine, medium, and coarse particles. Double receiving hoppers beneath the dryer receive medium and coarse sizes, and airborne fines go to the cyclones.

3. Hot-Conveyor Dryer

In the hot-conveyor system (Figure 13), the vibratory-type conveyor is fully enclosed with a hood. Hot gas from a boiler stack or from an air heater is pushed into a plenum underneath. The bed of the conveyor is a type of orifice system that fluidizes the material and provides good gas contact with the wood. The moisture and flue gas are vented

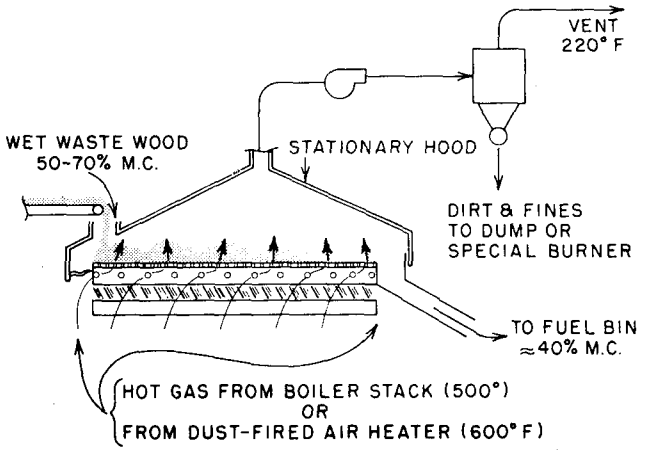

Figure 13. Typical vibratory hot-conveyor dryer.

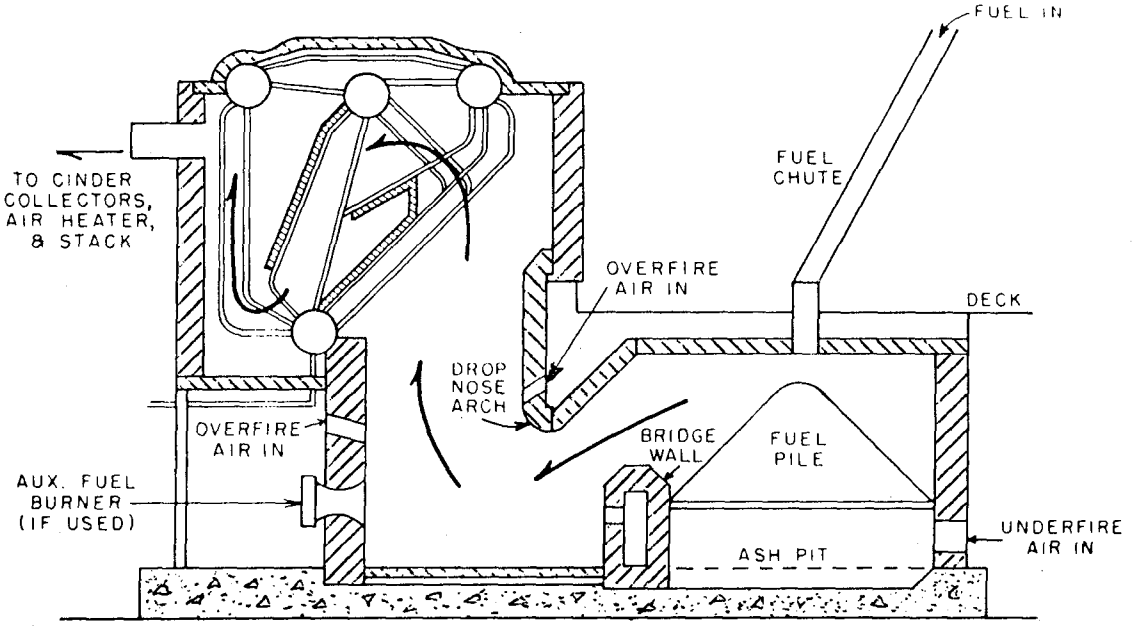

Figure 14. Dutch oven furnace and boiler.

from the hood through a fan to a cyclone or to a cleanup system.

WOOD-BURNING FURNACES

Because of the variable properties of wood residue and bark, the combustion engineer is faced with a difficult task in designing a furnace that will properly consume fuel to generate heat for the boiler. The design must be flexible enough that the furnace can handle the anticipated fuel, with nonuniform moisture content, and still follow the steam load demand on the boiler. The furnace may be separate from the boiler or integral with it. If it is separate, the firing is external to the boiler and the hot gases (which are probably still burning) are directed from the furnace to the boiler. If the furnace is integral with the boiler, the fuel is burned in the boiler, which is surrounded by heat transfer surface. Both types are in use in the United States today.

Designing or selecting a furnace or furnace-boiler system requires consideration of several subsystems:

1. The fuel system by which fuel is introduced to the furnace must be capable of delivering the fuel at variable rates. It must be reliable and easily maintained. Both cost and energy requirements must be considered in fuel system design.

2. The air system supplies air for combustion and possibly for cooling of grates or refractories. The air system must follow variations in fuel flow and maintain efficient combustion within the

furnace. If the system operates by natural draft, the stack must be properly designed. Most modern plants do not use natural draft systems but instead rely on fans to maintain air flow. The fans may be driven by electric motors or steam turbines. The total air system includes grates, ductwork, dampers, and controls and may also incorporate an air heater.

3. The ash handling system must be sized for the dirtiest possible fuel, that is, for fuel with the maximum expected ash content. Not all of the ash contained in the fuel drops through the grate to the ash pit. Some is carried through the boiler with the combustion gases where it may accumulate in "dead spaces." If it does not remain in the boiler, it enters the stack as fly ash. This fly ash is either removed from the flue gases by pollution control devices or emitted from the stack with the gas. If it is removed, final disposal of the fly ash must be considered.

4. Instrumentation and control systems enable the operator to fire the furnace for maximum efficiency while minimizing pollution. The pollutant of concern, particulate matter, is generated in the furnace and carried through the boiler. Although the monitoring and control systems are expensive, they are needed to ensure that the plant operates in compliance with the applicable regulations.

5. An auxiliary fuel system that carries the load when wood fuel is not available must be designed to come on line rapidly and efficiently. The air supply system and the instruments and controls must function well with the auxiliary fuel system.

Dutch Ovens

The Dutch oven was the standard design used for wood firing before World War II. Because these are relatively small units, steam plants that use them often operate several in parallel to provide the desired capacity. Figure 14 is a

cross-section of a Dutch oven, which is primarily a large, rectangular box, lined on the sides and top with fireback (refractory). Heat is stored in the refractory and radiates to a conical fuel pit in the center of the furnace. The heat aids in driving moisture from the fuel and evaporating the organic materials. The refractory may be water-cooled to minimize damage of the furnace by high temperatures.

The fuel pile rests on a grate through which underfire air is fed. Overfire air is introduced around the sides of the fuel pile. By design, combustion in a Dutch oven or primary furnace is incomplete. Combustion products pass between the bridge wall and the drop-nose arch into a secondary furnace chamber, where combustion is completed before gases enter the heat exchange section.

This furnace design incorporates a large mass of refractory, which helps to maintain uniform temperatures in the furnace region. This tends to stabilize combustion rates, but also causes a slow response to fluctuating demands for steam. The Dutch oven system works well if it is not fired at high combustion rates and if the steam load is fairly constant. With this design, however, the underfire airflow rate is dependent upon height and density of the fuel pile on the grates. When the fuel pile is wet and deep, the underfire airflow is low and the fire may be deficient in oxygen. As the fuel dries and the pile burns down, the flow

rate increases as the pressure drop through the fuel pile decreases. In this manner an excess of air develops in the furnace. With fluctuating steam loads, the result is a continuous change from insufficient air to excess air. Because of this feature, together with slow response, high cost of construction, and high costs of refractory maintenance, the Dutch oven designs are being phased out.

In a well-designed Dutch oven a grate approximately 9 feet on each side is close to the economical limit of area that can be supplied with fuel from one feed opening. The feed opening is located so that the conical pile thins to a feathered edge at the furnace front and reaches a depth of 12 inches at the bridgewall. With empirical factors, together with the known slope of the pile and the clearance between apex and arch, it is possible to determine required height of arch above the grate. The maximum size of the furnace unit or cell are thus well-defined and standardized. The dimensions most frequently used for Dutch oven grates are 8 feet wide by 9 1/2 feet long and 9 feet wide by 11 feet long.

Dutch ovens are usually designed with gravity systems that feed fuel from an overhead conveyor. Airflow may rely on natural draft or fans. Heated forced-draft air is sometimes used, but most designs rely entirely on the mass of the refractory to dry the fuel.

Ash removal is a major problem because not all the ash drops through the grates to the ash pit. Provision must be made for shutting down the furnace periodically to rake the ash from the grates. When several Dutch ovens are operating in parallel, one may be inoperative for cleaning.

Auxiliary fuel usually is not fired into the Dutch oven but rather into the secondary chamber below the boiler. Combustion Engineering[4] reports high maintenance costs because of the tendency of the refractory surfaces to flux when oil is burned in combination with wood; continuous use of auxiliary fuel is not recommended for Dutch ovens.

Most Dutch ovens at lumber mills are of the flat-grate type shown in Figure 14. A sloping-grate furnace is used at some paper mills that burn wet bark. The fuel enters the front end of the furnace across its full width and travels down the sloping grate as it moves through the furnace. The upper front section of the grate, which forms the primary drying zone, consists of a refractory hearth set at an angle of approximately 50 degrees. A regulating gate controls fuel-bed thickness at the point of entrance.

The middle section is composed of stationary grate bars set at an angle of 45 degrees and provided with horizontal spaces to admit air. The lower section of the grate is set at slightly less than 45 degrees and may be provided with

fuel-pushers that can be operated as required. Horizontal dump plates extend from the end of the grate to the bridge wall. Progressive feeding of the fuel from point of entrance to the dump is secured by grate slope. As the fuel dries, it slips more readily and the lesser slope in the second section serves as a retardant. The slope of the third section prevents the formation of an excessively thick fuel bed at the bridge wall end of the furnace. A portion of the combustion air is supplied through the two lower grate sections, and the remainder through tuyere openings in the front of the bridge wall. The face of the bridge wall is sloped to cause gas from the lower end of the fuel bed to sweep over and mix with gases coming from the drying section of the furnace.

The fuel bed of the sloping-grate furnace is comparitively thin so that, with relatively low undergrate pressures, air can be distributed through the bed to provide uniform combustion throughout. For good operation, however, the fuel should be quite uniform in size; otherwise streaks or pockets of greater density than adjacent areas may lead to formation of blowholes in the thin portions of the bed. The rate of combustion can be increased more rapidly, in relation to the draft, than in flat-grate furnaces, although the latter can carry much higher overloads. By carefully

controlling the rate of feed and using zoned air supply, the operation can obtain complete combustion with lower draft velocities and less excess air than in operation of flat-grate furnaces. Because of this responsiveness, the inclined grate lends itself to the use of automatic combustion controls.

Another type of furnace that operates on the same principle as the Dutch oven is the Dietrich cell. Figure 15 shows a single Dietrich cell under a small, horizontal-return-tube boiler. The cell acts to gasify the fuel, and the burning gases then enter the boiler. The operational constraints on the Dietrich cell are the same as those on a Dutch oven. For both, the maximum turndown is 3/1. Control is difficult with rapidly varying steam loads. Refractory maintenance is expensive and time consuming. The ashes must be raked by hand, and disposal is usually by means of a wheelbarrow to an open outside pile.

Spreader Stokers

Since World War II nearly all of the wood-fired boilers constructed in the United States have been spreader stokers. The design earlier proved satisfactory for coal firing, and many of the early units were only slightly modified to fire wood residue or bark. Some of the more recent units have been specifically designed for wood firing. The spreader

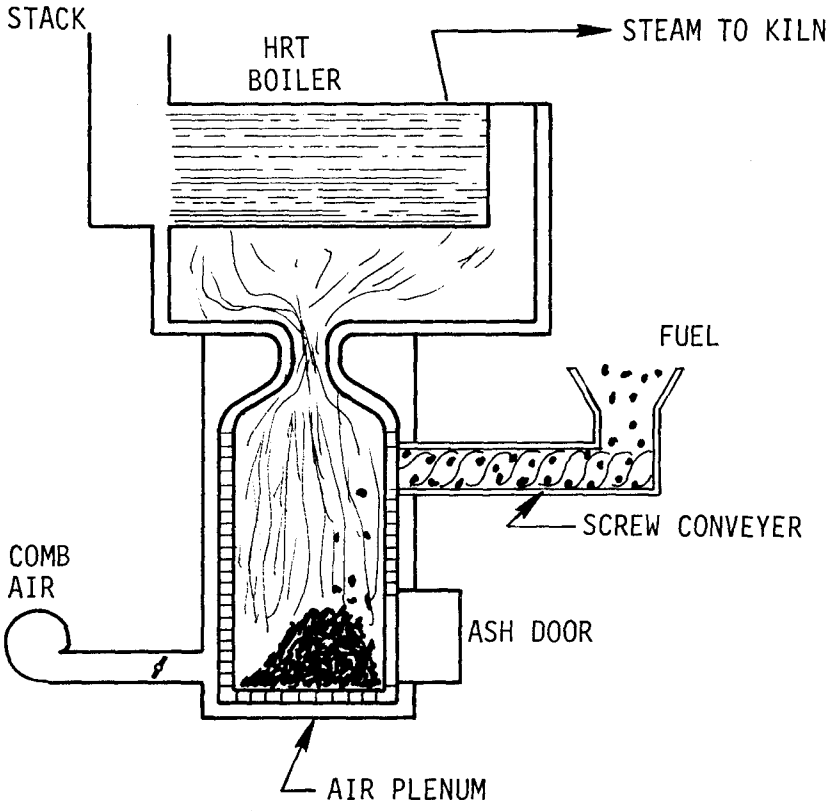

Figure 15. Pile burning: "Dietrich" cell.

stoker is an example of an integral furnace-boiler system. The fuel is burned in the base of a water-wall boiler unit rather than in a refractory chamber. Figure 16 illustrates a spreader stoker at the EWEB power plant. Figure 17 shows a typical small package spreader stoker, which can be sent to a plant in modules and rapidly erected. Several unique features distinguish the spreader stoker from the Dutch oven.

1. The fuel is dried by hot forced-draft air rather than by radiant energy from a large mass of refractory. This is accomplished by passing the flue gases through a gas-to-gas heat exchanger before exhausting them to the stack. The forced-draft fan takes in ambient air and blows it through the heat exchanger, where it is heated to approximatley 400°F before going to the furnace. This hot air is forced through the thin bed of fuel on the grates to dry the fuel.

2. Fuel is fed to a spreader stoker from an overhead conveyor, usually through a variable-speed auger metering system, to the spreader located at the front of the boiler. The spreader may be a mechanical "paddle wheel" type, which knocks the hogged fuel into the furnace, or a pneumatic type, which uses air pressure to blow the fuel across the grates.

Figure 18 shows the pneumatic stoker installed at the EWEB plant.

The spreader-stoker system may use a traveling grate, a dump grate, or a fixed grate. The traveling grate moves from the rear of the furnace toward the front. The larger pieces of fuel are thrown to the rear of the furnace and

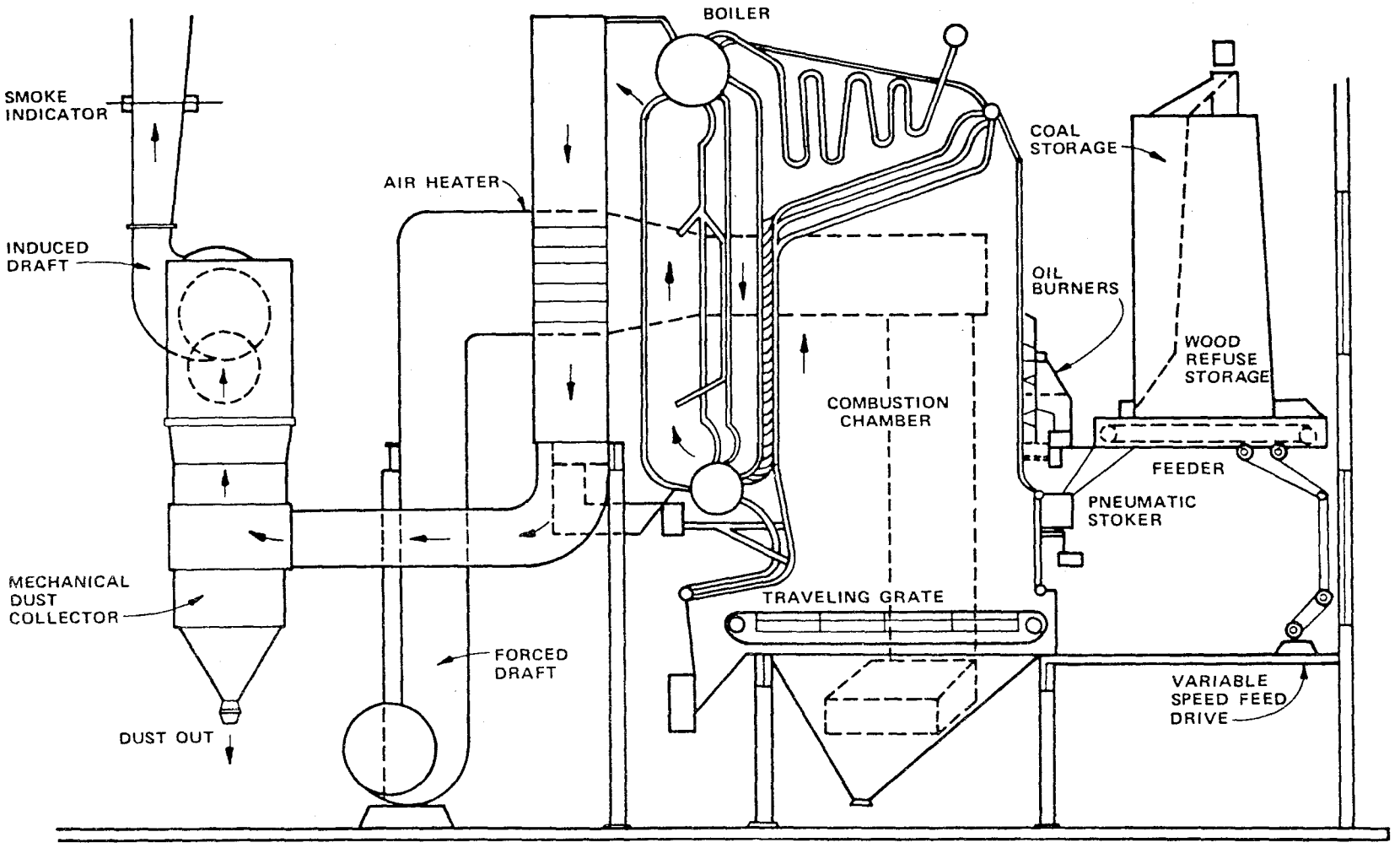

Figure 16. Spreader stoker fired steam generator

EWEB - Number 3 [6]

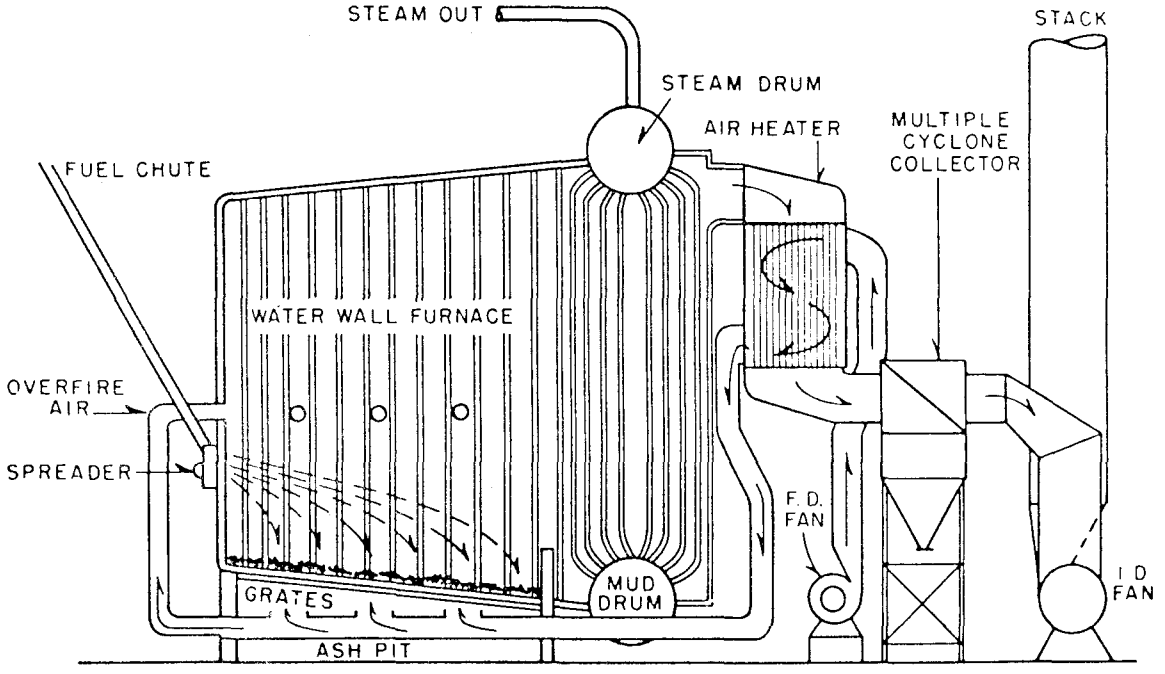

Figure 17. Small spreader-stoker furnace.

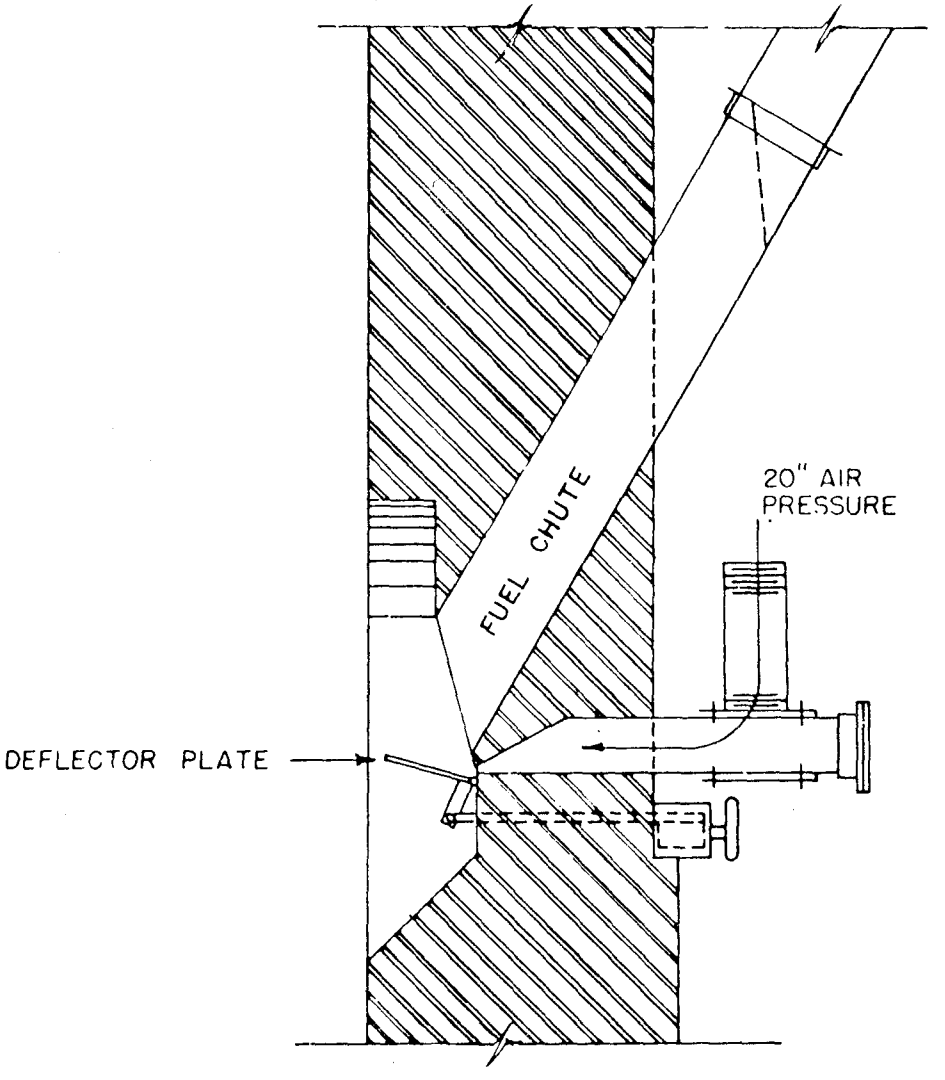

PNEUMATIC STOKER

NO. 2 BOILER

EUGENE WATER & ELECTRIC BOARD

EUGENE, OREGON

Figure 18. Pneumatic stoker - No. 2 boiler[6]

therefore remain on the grate longer to burn. The ashes on a traveling grate system are dumped at the front of the furnace.

3. Because the spreader stoker is an integral furnace-boiler system it is substantially smaller than a Dutch oven of the same output. Because of the smaller size and lighter weight (no refractory), small units can be transported by truck or rail.

4. Spreader stokers respond rapidly to load changes. The thin fuel bed and lack of refractory contribute to a low "thermal inertia." This rapid response can be detrimental, however, because only a brief failure of the fuel system causes the fire to be extinguished. Turndown ratios of 4/1 are quoted for spreader stokers.

Extremely large spreader stokers are currently being constructed to provide steam power from wood residue. A recent proposal[7] for EWEB calls for four spreader stoker boilers with capacities of 400,000 pounds per hour generating steam at 950°F and 1450 psi. This steam would power two 62.5-MW turbines. The estimated cost of the entire project, including fuel storage, power plant, and cooling tower is $53 million (1976 dollars).

Fuel Cells

Fuel cells are suspension burning systems that burn small-size, dry fuel supported by air rather than by grates. The fuel particles, mixed with combustion air, completely fill the combustion chamber. This feature is in contrast to fluidized bed combustion, where in fuel particles remain in

the "bed" even though supported by air. Sanderdust usually is burned in this manner. With adequate size reduction, wood and bark residues also can be burned in suspension. The advantages of suspension burning include low capital costs for combustion equipment because no grates are required and ease of operation, as grate cleaning is eliminated. The ash goes into suspension as particulate matter in the exhaust stream or falls to the furnace bottom for removal. Rapid changes in rate of combustion are possible.

Figure 19 is a fuel cell of this type. Figure 20 shows the same fuel cell installed to supply heat to a boiler.

Suspension burning has disadvantages, however. Because most of the ash escapes with the exhaust gases, control of fly ash may be difficult. For this reason some suspension units are designed to "slag" or melt the ash in the combustion chamber and thus reduce the amount of ash entrained in the exhaust-gas stream. Temperature control in the combustion chamber is critical. If the ash-fusion temperature is exceeded, the ash may form large pieces, which can plug or damage the system. Fuel preparation must be thorough to provide sizes small enough for suspension burning. Moisture content also must be controlled within reasonable limits, a requirement that can be costly for systems burning wood and bark. With sanderdust fuel, no further processing is needed.

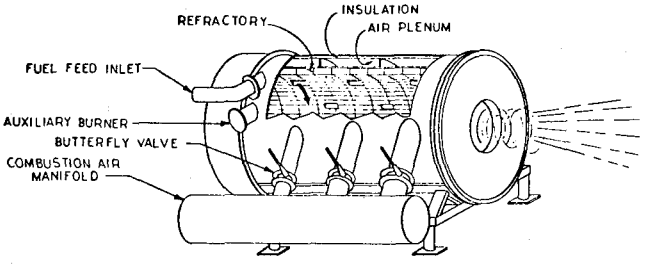

Figure 19. The Energex cyclonic burner.

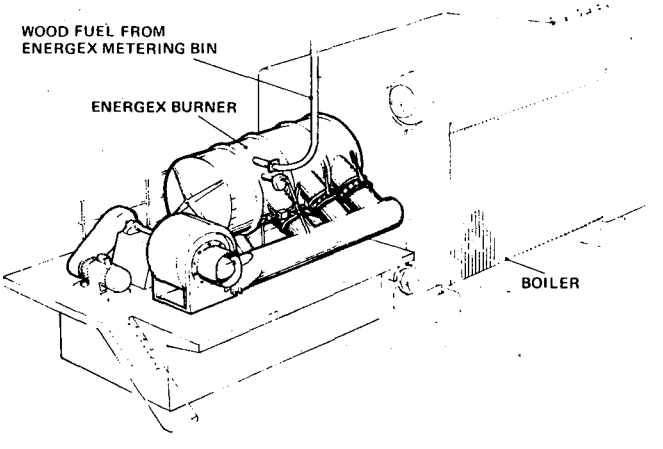

Figure 20. An Energex-fired package boiler.

Residence time is critical (as in any combustion system). Suspension burning inherently provides short residence. At high combustion rates, the residence time may be insufficient for the process to go to completion.

The capacity of fuel cells is limited; therefore, as more energy is needed, more fuel cells are added. As fuel-drying systems are perfected, it is probable that more fuel cells will be used, even on larger boilers. Figure 21 shows the complete system requirement for use of wet wood residue and bark as a fuel for a large suspension burning system. Fuel cells are particularly hard on refractory because of the high temperatures involved.

Fluidized-Bed Combustion. One of the newer systems developed to burn solid fuels is the fluidized-bed combustion furnace. The system can burn high-moisture fuels and can react to changes in steam demand more rapidly than some of the other systems. Fluidized-bed combustion of cellulose materials was originally developed to incinerate wastes from pulp and paper mills having moisture contents up to 67 percent.

The fluidized-bed system incorporates a large mass of finely ground inert material (like sand), which provides a very large exposed surface area. The inert material is contained in a vessel, through which air is passed upward so

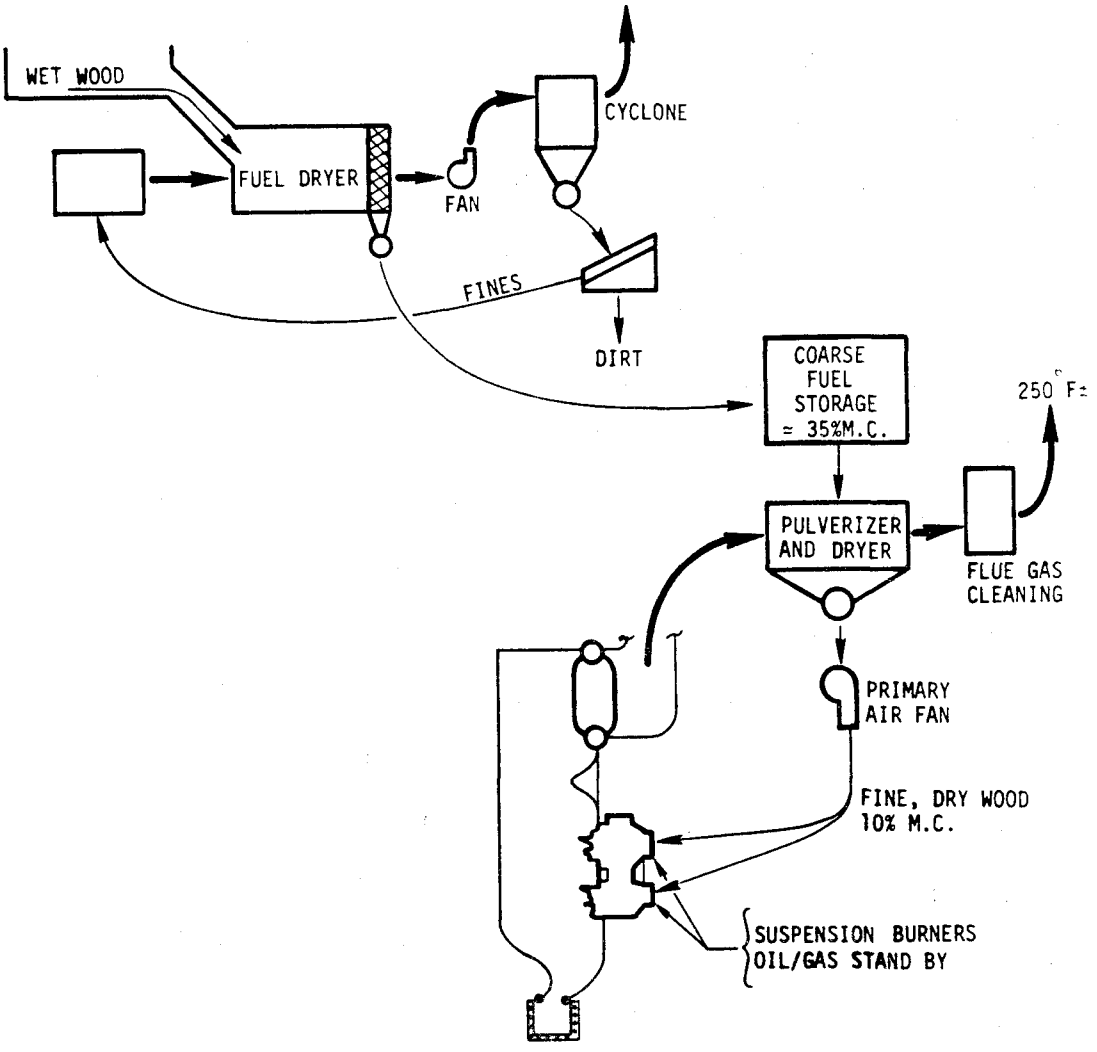

Figure 21. Large suspension burning system.

that the bed becomes "fluidized"; it resembles a boiling liquid that keeps the particles in a state of constant agitation. The bed is preheated to about 1400°F. When a finely divided solid fuel is introduced, the hot inert mass provides sufficient energy capacity and radiating surface to "flash" evaporate the fuel moisture and gasify the volatile component of the fuel. The remaining fixed carbon in the fuel is oxidized as it moves through the fluidized bed. The process generates little or no flame but rather a glowing bed. Combustion is rapid, and the fluidized bed proper contains no unburned organic material. Particulate emissions are therefore minimal.

The fluidized bed may be used as a hot gas generator for a separate boiler, or heat may be transferred directly from the bed to the steam by placing bundles of tubes in contact with the inert material of the bed.

In a 1975 presentation, Keller[11] described application of the fluidized-bed system to steam plants using wood residue fuels and indicated plans by Energy Products of Idaho to have ten fluidized bed units in operation by September of that year. This development has not proceeded on schedule.

Direct Firing Applications

Within the past 5 years, installations have been made in the United States in which the hot gases from burning

bark (and wood) are used directly for heat. Applications involving direct firing of wood and bark include veneer dryers, drying kilns for lumber, and dryers for wood and bark particles.

Deardorff[12] describes a pile-burning, hogged-fuel-fired furnace that supplies heat directly to a veneer dryer. Jasper and Kock[13] report on a suspension burning system in which undried bark is pulverized and burned in a cylindrical, annular combustion chamber. The system has been tested in the laboratory, and the authors propose construction of a production model to be used with a lumber dry kiln.

Although direct-firing systems are not "wood waste boilers," they are included in this report for two reasons: 1) because the furnaces are similar to the others discussed, the problems involving fuel, control, and air pollution emissions problems are similar to those of furnaces used in conjunction with steam-producing boilers, and (2) direct-fired units may replace the current wood waste boilers, since developmental work on direct firing is progressing rapidly.

BOILERS

The term "boiler" is sometimes interpreted as denoting the entire steam plant, just as "boiler house" denotes the structure that houses the "boiler." For this discussion,

the boiler is considered the device or system that allows the heat energy released in combustion of the fuel to flow into the water, or steam, by radiation, convection, and conduction. The amount of heat energy transferred by radiation is proportional to the difference between the fourth powers of the absolute temperature of the transmitting hot body and the receiving cold body. The radiant absorption in a boiler is a function of the amount of surface that "sees" the furnace. The amount of energy transferred by convection and conduction is a function of the mass flow of gas over the heat absorbing surfaces and the mean temperature difference between the gas and water, or steam, in the boiler.

A boiler may be rated by its Btu input, square feet of heating surface, pounds of steam produced per hour, at a certain temperature and pressure, or boiler horsepower. By definition, 1 boiler horsepower is the equivalent of work required for evaporating 34.5 pounds of water from the liquid to the gaseous phase and 212°F in a period of 1 hour. It is also equal to 33,472 Btu per hour. There is no relation between boiler horsepower and the mechanical horsepower of the prime movers using the steam produced.

In further classification of boilers, two designations are now standard: firetube and watertube boilers. In Oregon about 30 percent of the boilers are firetube and 70 percent are watertube.[8]

Firetube Boilers

In a firetube boiler the hot gas passes through the inside of the tubes, with water on the outside. Firetube boilers were once the standard of the wood products industry. The donkey boiler used for yarding in the woods was a single-pass, firetube boiler. At the mill, the steam was probably generated by a horizontal return tube boiler (HRT). These are relatively low-pressure boilers that can accommodate only a small amount of superheat. They are relatively inexpensive, the chief reason that some are still in use today. Because of the low pressure, under 15 psi, these boilers can be fired unattended. Another advantange of the firetube boiler is that the large water storage capacity allows the boiler to meet sudden demands on steam with only slight fluctuations in pressure.

Because of the large water capacity, however, bringing the boiler to operating pressure is a slow process. Other disadvantages of the fire tube boiler are that the overload capacity is limited and the temperature of the exit flue gas rises rapidly with increased output.

Watertube Boilers

Watertube boilers are used on systems with pressures above 150 psi and capacities over 15,000 pounds of steam per hour. These boilers are particularly suitable to operations

in the current forest products industry. The early water-tube boilers required four drums to provide enough steaming capacity with the steel and fabricating techniques then available. Today, large units may have two upper drums (steam drums) and one lower drum (mud drum). For small and medium-sized boilers a single upper drum is sufficient.

With furnacewall cooling (waterwalls) nearly all water-tube boilers manufacturered today are bent-tube rather than straight-tube boilers. Improvements in feedwater conditioning have minimized scale deposits, and the boilers no longer require straight-tubes with handhole fittings for cleaning.

General Boiler Considerations

Critical factors in boiler design and operation include pressures, temperatures, feedwater treatment, and water level. Firing of boilers with wood residue and bark involves some additional problems that must be considered.

1. Wood fuels tend to produce soot. These fuels produce both unburned carbon and some unburned hydrocarbons, which collect on the heat exchange surfaces and inhibit heat transfer. To prevent excessive buildup of soot, wood-fired boilers are equipped with soot blowers to remove soot periodically. Both intermittent and continuous blowers are in use. Intermittent soot removal is usually scheduled daily, during early morning hours when the heavy emissions of smoke and soot cannot be seen. Continuous soot blowers remove the soot before it can accumulate in large quantities. The most commonly used soot blower is basically a steam jet, directed so that the steam impinges on the boiler tubes and blasts the soot from the tube surfaces.

2. The various types of ash that are introduced with the wood or bark that are introduced with the wood or bark fuel can cause slagging in the furnace or boiler section. Slagging is particularly harmful in the superheater section or in the boiler tubes between the furnace and the superheater inlet. In these sections it can cause localized overheating and subsequent failure of the superheater element. Cleaning with an air lance may be necessary to prevent slag buildup within the boiler.

3. Large quantities of ash can cause erosion. A boiler operator may habitually allow too much excess air, causing high velocity through the tubes and superheater. Sudden introduction of a load of dirty bark can literally sandblast the tubes. Several cases are reported in which "...the superheater tubes suddenly started getting shiny and the next thing that occurred was a failure."

4. Corrosion may be caused by burning of logs that were stored in saltwater. This can affect the boiler setting, fans, control elements, and any point at which gas temperatures are allowed to fall below the dew point. Localized condensation can lead to rapid deterioration of unprotected parts, a major problem in air heaters.

INSTRUMENTATION

To achieve the highest possible efficiency and continuity of operation in a steam generating plant, the operators must maintain reliable performance records.[4] These records should include temperatures of steam, feedwater, air and exit gas, and data on gas analyses, draft losses, steam flow rates, and amount of fuel consumed. If these data are continuously available to the operator, he can quickly adjust the fuel and air supplies to correct any deviation from normal. Furthermore, examination of records may indi-

cate possible changes in operating procedure that would improve performance or reduce pollution.

Proper instrumentation is not the most expensive portion of a steam plant but it may be one of the most important. Many old Dutch ovens are still being fired (poorly) with only a pressure gauge and water level gauge to indicate over-all boiler conditions. The boiler, however, is a series of systems, each with appropriate instrumentation to indicate the current operating point. The subsections that follow describe the instrumentation available for monitoring and operation of the fuel, air flow, and flue gas systems of a wood-fired boiler.

Fuel System Instrumentation

Most wood-fired boilers are not equipped with instruments to measure variables of hogged fuel such as moisture content and size. Some available instruments, however, can provide useful information for boiler operators.[8]

Metal detectors offer the obvious advantage of limiting damage to equipment by tramp metal in the fuel system. They can be used to sound alarms, shut off conveyors, or perform similar functions.

A fuel weighing system that provides data concerning fuel flow rates is helpful in accounting for total fuel usage and also can be used to signal the operator when the

conveyor system is carrying no fuel. The value of weight data is limited in that the weight of fuel varies directly with moisture content, which can vary over a wide range. The most common fuel weighing system in use today consists of a load cell under the fuel conveyor. The output signal from the load cell is electronically converted to display pounds of fuel per hour.

Television scanners can monitor most fuel handling systems, including conveyors, hogs, storage bins or piles, feed systems, and screens. Each component of the system can become plugged or fail to function, with the result that the fuel supply to the boiler stops. When closed-circuit television scanners are located at critical points in the system, the operator can quickly spot any disruption and take corrective action to minimize changes in fuel flow to the boiler. A scanner system can be installed with several cameras and only one video screen. Using a selector switch, the operator can check the system at any of the several points being monitored.

Fuel feed monitors are helpful in the common situation where fuel is fed to a hogged fuel boiler at more than one point. The operator can readily determine whether fuel is flowing freely through each feeder. Feed monitors are available in a variety of designs, including glass panels in

the system and mechanical linkages that move as long as fuel is being fed. The rate of feed is seldom measured.

Fuel moisture meters can facilitate occasional spot checks of moisture content. Few plants do this regularly, however, and the data are not used to control the combustion process. Efforts are under way to develop reliable systems for continuously measuring fuel moisture. This type of information is useful in determining when to use auxiliary fuel, but it is not requisite for boiler operation. In plants where fuel drying and sizing are part of the operation, moisture measurement can be a valuable control monitor for the fuel preparation system.

Air System Instrumentation

The discussion of air monitoring equipment is limited to the combustion air input system and the induced-draft system. The exhaust gas system is discussed separately.

Even though temperatures and flow rates of combustion air are critical in the combustion process, few boilers are instrumented to measure and indicate gas temperatures or air flow rates, for several reasons:[8]

1. Knowledge of air temperatures is seldom needed. If the boiler is equipped with an air preheater, it is used to maximum capacity. If it has no air heater, knowing the air temperature does not assist the operator in his duties. An air temperature that is not within the normal range can indicate a possible trouble source that may need correction.

2. Total airflows directly affect the percentage of excess air. But because the excess air level can be determined accurately from analyses of the exhaust gases, measurements of input airflows are redundant.

3. The cost of installing equipment for continuous monitoring of airflow has been prohibitive. Continuous measurements of gas flows to underfire and overfire air systems could signal the operator to correct the flows for optimum combustion. The economic returns from installation of such equipment, however, are difficult to identify.

Air pressure instruments are common. Draft gauges on control panels indicate positive and negative pressures at various points in the combustion and heat exchange systems. The operator uses data from these instruments to determine when plugging occurs because of ash buildup. The data are also useful in setting airflows to maintain proper pressures in the furnace.

Flue Gas System

Flue gases can be monitored continuously to determine such parameters as temperature, percent carbon dioxide or oxygen, and opacity or optical density.

Temperature - Temperature is dependent upon so many variables that fluctuations are difficult to relate to a specific cause. Changes in air heater performance, steam generation rate, fuel moisture content, fuel heating value, and percent excess air all affect exhaust gas temperatures. A marked change in temperature, however, can signal the operator to investigate.

Percent Carbon Dioxide or Oxygen - Of all continuous monitors available to the boiler operator, those that analyze flue gas for carbon dioxide or oxygen content are the most valuable indicators of combustion conditions. As noted earlier, the balance between fuel and air supply is critical to proper combustion. Continuous measurement of combustion products can inform the operator of any upsets in this balance. He can then adjust conditions to maximize boiler efficiency and minimize air pollutant emissions. Without data from flue gas analyses, the operator can only guess at the percentage of excess air being used in the system.

Continuous gas analyzers are costly ($2000 to $5000 per installation), and they also require maintenance and calibration for proper functioning. The expense can be justified, however, by fuel savings and reduction of air pollutant emissions.

One difficulty should be noted. Most continuous flue gas monitors are fairly delicate instruments. The output signal is based upon a small voltage generated by the instrument in response to the concentration of the gas being analyzed. If the instrument is not grounded properly, a false reading may be caused by an electrochemical reaction within the instrument. This is a common problem, but also one that is easy to correct.

The best alternative to continuous analysis of flue gas is analysis of grab samples. Two common grab-sample analyzers are the Orsat and the Fyrite gas analyzers. Each provides measurements that are accurate to within about 0.2 percent. The cost is moderate, and the instruments are well suited for field use. Orsat analyzers require more skill to operate than do the Fyrite units, and may offer a slight advantage in accuracy. Both units require regular replacement of chemicals. Sample time from start to finish may be 10 to 15 minutes. Therefore, if combustion conditions vary substantially over short intervals, this type of analysis may not be suitable.

The importance of flue gas analyses cannot be overstressed. Every boiler operator should have these data at his disposal at all times. Without them, he cannot properly control the combustion process.

Opacity - Most regulatory agencies have implemented standards regarding opacity limitations. The standards specify that emissions may not exceed an opacity limit (usually 20 or 40 percent) for more than 3 minutes in any hour. Commercial opacity monitors are available and are in common use. Their use, however, is limited to providing information to the operators, since most agencies do not accept charts from opacity monitors as proof that emissions are in

compliance. An opacity monitor is a warning device to signal an operator of a combustion upset that may cause heavy particulate emissions. It does not respond to gaseous pollutants.

Opacity monitors are installed in the exit-gas duct system, usually downstream from devices for emission control (for example, multiple cyclones). This location may be in the breeching or in an exhaust stack. The systems commonly incorporate a light source, a photoelectric cell, an amplifier, and a recorder (Figure 22). Light from the source travels through the exhaust gas stream. Particles in the gas stream absorb or scatter the light and reduce the signal at the photoelectric cell.

CONTROLS

Control of the boiler may be manual, with the operator making all adjustments to all systems, or automatic, with the operator adjusting only the control set points as required. A further refinement is a computerized boiler control system, in which all adjustments are made according to a programmed scenario.

Manual Control

Manual control is the usual system on older Dutch ovens with smaller boilers. The operator controls boiler pressure by adjusting the fuel flow. Height of the fuel pile is

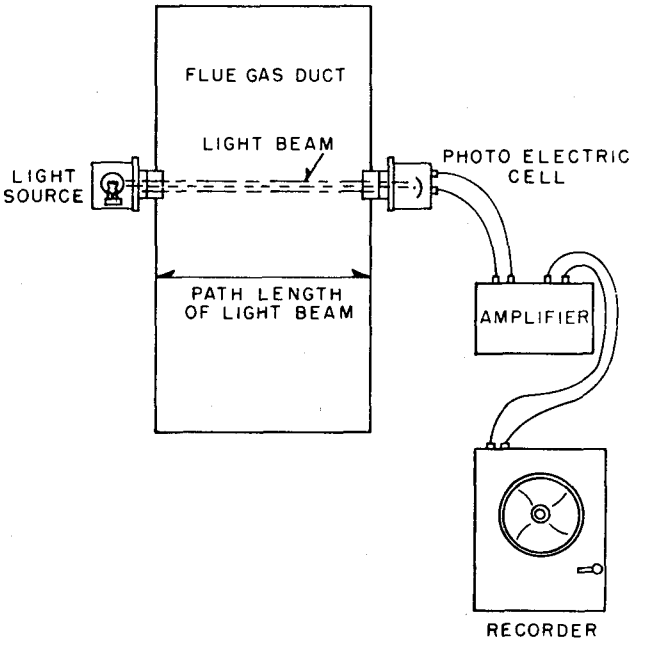

Figure 22. A common arrangement of instruments to monitor opacity of exit flue gases.

judged by visual observation, and fuel flow is controlled by a splitter or gate in the gravity feed portion of the fuel system.

Air flow is controlled by adjusting the stack draft damper and opening or closing the furnace draft doors or louvers.

Water level is adjusted by means of a valve in the bypass line of the boiler feed pump. An alarm signalling a low water level and a safety valve that lifts at an excessive pressure are the only controls not manually operated.

The operator is responsible for maintaining steam pressure and flow by applying his knowledge and skill. Many times this same operator is responsible for shoving fuel into the conveyor and making sure that fuel placed in the conveyor reaches the furnace.

Automatic Control

A relatively larger boiler is usually also more complicated. The operator of this complex system is required to maintain steam flow and pressure, ensure efficient operation, and comply with air pollution control regulations. It is usually necessary, therefore, to provide controls that will permit adjustment of remote systems from a central position at or near the boiler instrument panel.

The devices that permit remote operation are power-operated by compressed air, by oil or water under pressure, or by electric motors or solenoids. They enable the operator to quickly adjust the position of valves, dampers, and similar devices to compensate for fluctuations in boiler conditions. Frequent and repetitive manual operations, often tiring to the operator, can be performed more efficiently by automatic controllers. More uniform furnace operation will result, and boiler performance can be maintained close to optimum levels. The additional cost of an automatic control system over a simple instrumentation system is not excessive and usually is soon repaid in fuel savings.

As an example, consider the control of fuel flow to the boiler to maintain the steam output for maximum efficiency. If the fuel flow is controlled manually, the following events are possible:

> If the steam pressure gauge indicates the specified pressure and is steady, the fuel adjustment is adequate.
>
> If the steam pressure gauge indicates a dropping steam pressure, the fuel flow must be increased, the amount to be determined by the operator's experience.
>
> If the steam pressure gauge indicates a rising steam pressure, the fuel flow must be decreased, again in accordance with the operator's judgement.
>
> If the steam pressure drops excessively, the operator will be notified by another person that the steam supply is inadequate.

If the steam pressure increases excessively, the safety valve will lift and steam will be exhausted to the atmosphere.

It is difficult for even an experienced operator to analyze which of the possible events is occurring by glancing occasionally at the pressure gauge. A steam pressure sensor continually monitors the pressure and sends a signal to an automatic controller. The controller can be programmed to accept the pressure sensor signal, compare it to the steam pressure set point, determine whether it deviates from the set point, and indicate the proportional action to be applied to the fuel feed system to return the steam pressure to the set point.

Similar automatic control systems can be used to adjust draft systems, water levels, and furnace temperatures. In all cases the automatic control system can provide more continuous surveillance than can the boiler operator. The result is steadier firing of the boiler at a higher overall efficiency with a greater degree of air pollution control.

Computerized Control Systems

Boiler control by computer offers the ultimate in automation. The computer can be programmed to anticipate load changes through time controlled inputs, to indicate that designated limits are going to be exceeded before this occurs, to print out all important data should a failure or

upset occur, to print out routine control settings at predetermined time intervals, and to adjust the control systems to accommodate daily, weekly, or monthly variations such as changes in weather or seasonal loads.

New boilers being installed in plants having computer equipment may be able to utilize that equipment through time sharing. If the company already employs a computer programmer, he should be consulted about potential computerized control of a new boiler.

4.0 OPERATING VARIABLES

Having described the distinctive properties of wood as fuel and the processes by which combustion occurs in the several types of wood-burning furnaces, we consider now the principal aspects of furnace operation. The operating variables are classified as fuel-related, air-related, and operator-related factors, as listed in Table 13; all of these factors contribute to the over-all efficiency of the system. The fundamentals outlined in this section can be regarded as a 'primer' of wood-burning boiler operation.

FUEL VARIABLES

Control of Fuel Size

Four methods are used to control fuel size: screening fuel to separate the oversize pieces; hogging the large pieces; mixing the fuel in storage and transport facilities; and maintaining separate facilities for storage, transport, and feeding of sanderdust.

Method of Feeding Fuel

The method of feeding fuel to a boiler furnace is dependent on the furnace design. In firing of a Dutch oven, the fuel is dropped through a chute on top of a pile.

Table 13. FACTORS AFFECTING THE COMBUSTION REACTION IN BOILER INSTALLATIONS FIRED BY HOGGED FUEL[8]

FUEL-RELATED FACTORS
Species
Size
Moisture content
Ultimate analyses
Proximate analyses
Heating value
Method of feeding fuel
Distribution of fuel in furnace
Variations in fuel feed rates
Depth of fuel pile in furnace
Separate firing practices
Auxiliary fuel usage
AIR-RELATED FACTORS
Percent excess air
Air temperature
Ratio of overfire air to underfire air
Turbulence of air
Flow relation between forced-draft and induced-draft systems
OTHER FACTORS
Cleanliness of the combustion system
Basic furnace design
Maintenance of components
Steam generation rate
Steam drum water level

Several piles may be used for one boiler. In a spreader-stoker furnace, a mechanical or pneumatic spreader distributes the fuel across a grate. The desired result is to lay a thin, uniform mat of hogged fuel across the entire grate area.

These two systems differ substantially. In the Dutch oven, the fuel reaches the top of the pile in a stream and cascades down the sides. Little combustion of the fuel occurs until it has settled on the sides of the pile, where it receives radiant heat from the refractory lining of the oven. This heat input, coupled with convectional heat transfer from the hot gases around the pile, provides energy to evaporate the water in the fuel and raise the temperature. Gases evolved from the pile are rich in carbon monoxide. As these pass between the drop-nose arch and the bridge wall, the overfire air supplies sufficient oxygen to complete the combustion of carbon monoxide to carbon dioxide.

In a spreader stoker, the fuel spread across the grate must fall through the flames of the burning material on the grates. Small, dry particles of fuel, such as sanderdust and planer shavings, will heat quickly and burn in suspension before they arrive at the grate. Larger, moist fuel particles such as bark and coarse white wood, will fall to the grate and burn there until they become small enough and

light enough that the air from under the grates carries them into suspension. Combustion is completed in suspension (provided that time, temperature, and turbulence are adequate). The spreader-stoker design does not require large amounts of refractory to radiate heat back to the burning fuel pile. Heat is radiated from the flame zone above the grates back to the fuel on the grates, aiding the initial combustion. Heat also is transmitted to the fuel through turbulent flow of hot combustion gases within the furnace and heated underfire air. Combustion must be completed in the furnace chamber.

Because the method of fuel feed is tied closely to the furnace design, the feeding methods are not easily interchangeable. The furnace design and the associated methods of fuel feed do influence the combustion process.

Distribution of Fuel in the Furnace

Furnaces are designed for uniform combustion of fuel across the furnace area. Fuel on one side of the furnace should be subject to the same conditions of available air, temperature, turbulence, and gas velocity as fuel on the other side. If the feeding system allows for uneven distribution of the fuel, the entire combustion system is unbalanced. Thus the need for uniformity applies to fore and aft distribution as well as side to side distribution. The

primary concern for all types of furnaces is that fuel be placed evenly in the combustion zone.

Control of Fuel Distribution

The methods of controlling fuel distribution depend, of course, on the basic furnace design. In Dutch ovens with center feed chutes, little can be done to alter the placement of fuel over the grates. Ideally, the pile should be set squarely in the center of the refractory and symmetrically about the underfire air feed system. If the fuel chute is off center and piles fuel in a corner or to one side of the oven, combustion will not proceed uniformly in the pile. Improvement of distribution of fuel in a Dutch oven is usually expensive and must be done when the furnace is cold.

In most spreader-stoker systems, the fuel distribution may be adjusted manually. The speed of mechanical spreaders can be reduced or increased. Baffle plates often are provided to control the angle at which fuel is injected into the furnace. Other mechanisms are sometimes available to adjust the width of the fuel path. These same options are often available on pneumatic spreader systems. The most important control, however, is the operator. By inspecting the fuel pile through inspection and cleanout ports, he can determine the uniformity of fuel distribution in the furnace

and can make any required adjustments. Such inspections should be made regularly, since no automatic systems are available to replace operator skills.

Variations in Fuel Feed Rates

In almost all boilers, changes in steam demand occur during normal operation, sometimes ranging from 40 to 125 percent of the boiler rating over a few minutes, although most load changes are not so drastic. In response to load changes, the fuel feed rate is increased or decreased. Decreasing the feed rate usually has no adverse effect on the combustion reaction. The fire burns to a lower level, and steam production drops off.

An increase in steam demand, however, may cause substantial problems. Consider a furnace that is operating at 75 percent of full load. Suddenly, the load demand increases to 100 percent. As the steam demand increases, the fuel feed rate increases. The furnace receives hogged fuel with moisture content of 45 to 50 percent. This increase in the rate of wet fuel going to the furnace may reduce the temperature in the combustion zone. As the temperature falls, so does the combustion rate. To compensate for this, more air is added, usually as underfire air, to help dry the fuel and increase the rate of combustion, which increases the percentage of excess air. This procedure tends to

reduce combustion efficiency and frequently causes emission of substantial amounts of unburned material. Gradually, as the wet fuel dries, the temperature and the rate of combustion increase, and the steam output also increases.

The degree to which the combustion process is upset depends on the initial rate of combustion, the change in fuel feed, the design and size of the furnace, the moisture content and size of the fuel, the temperature of underfire and overfire air, the amount of excess air, and other related combustion variables. If the feed rate of hogged fuel is increased drastically over a short time, substantial upsets can be expected. If the feed rate is increased gradually, less disturbance will occur. The most dramatic upsets can occur in furnaces that are batch fed from a hopper. Maintaining stable combustion is virtually impossible when a ton or more of wet, cold, hogged fuel is dropped into a furnace.

Controlling Variations in Fuel Feed Rates

The ideal condition for combustion control is a constant rate of fuel feed to maintain a constant rate of steam generation. The worst condition is batch feeding of fuel to accommodate a highly fluctuating demand for steam.

Fortunately, few furnaces are now batch fed. The fuel flow usually is controlled by a hopper-fed screw conveyor or similar device. Direct-current drives are common, with the

control signal coming indirectly through a transducer for steam header pressure. Great ingenuity has been shown in boiler plants to provide uniform fuel feed to the furnaces.

Process operations in the plant control the steam demand and therefore the fuel flow rate. Improving the control of process operations often can eliminate wide fluctuations in steam demand. Such improvements require an understanding of the problems and the cooperation of plant supervisors and production personnel.

Depth of Fuel Pile in the Furnace

Depth of the fuel pile affects the combustion process in two ways. First, it determines the amount of underfire airflow. As most hogged fuel boilers are not equipped to vary air pressure, the airflow rate decreases when the pile height increases. A reduction of underfire airflow may raise the overfire airflow if the air duct system is not equipped with individual damper controls.

The reverse also occurs. When depth of the fuel pile decreases, the underfire air encounters less resistance to flow as it passes through the pile. The underfire air flow therefore increases, and overfire airflow may decrease. This reaction occurs with Dutch oven and spreader-stoker designs, although the responses to pile depth are not equal.

The second effect of fuel pile depth is to change the transfer of radiated heat to the fuel, applicable to Dutch ovens only. In a Dutch oven, the closer the fuel is to the hot refractory lining, the faster the volatile portion of the fuel receives radiated heat and evaporates to the gaseous phase. Thus, increasing the pile depth can increase the rate of combustion in a Dutch oven. There is an upper limit, however. As the surface of the fuel pile approaches the top of the Dutch oven, the volume of gas in the oven is reduced. As a result, residence time is reduced and gas velocities increase. The resulting incomplete combustion of fuel will reduce both the temperature and the rate of combustion in the furnace.

Fuel Pile Depth Controls

Over the past 60 to 70 years, the depth of fuel piles has been controlled principally by the boiler operator. Only recently have there been efforts to control the depth of piles by automatic means. This technology has been applied to Dutch ovens with moderate success.

In the automatic controls a temperature sensing probe is inserted from the top into the pile. As the pile burns down, more of the probe is heated. As fuel is added, it covers the probe and thereby insulates it from the flame temperatures. The probe temperature thus provides a direct

measure of the pile depth. The temperature can be used as a signal to the feed system to control the depth of the pile automatically.

Among the several commercial models now available, some sense the temperature with a thermocouple and others measure the temperature of water flowing continuously through the probe. Each system works well, with little or no maintenance difficulty. Either is preferable to manual control by the boiler operator, which requires continued surveillance, particularly during load swings, and constant adjustment to maintain optimum operation.

Separate Firing Practices

In operation of hogged fuel boilers, the various fuel components (bark, planer shavings, sanderdust) can be fed to the furnace as a mixture or they can be fed separately. The two fuel components that usually are fed through separate systems are sanderdust and cinders.

Sanderdust particles are small and relatively dry. These characteristics allow extremely rapid combustion if the fuel is properly suspended and other conditions are favorable. In rapid combustion the available oxygen is consumed at a high rate. If the oxygen supply is limited, the sanderdust and any other fuel may be "starved" for oxygen, in which case unburned particles will leave the

furnace as dense, black smoke. For this reason sanderdust is often injected separately with its own controlled air supply.

Separate firing of sanderdust offers several advantages. In a well-designed system it will limit dust emissions in handling and storage, provide a proper balance of air and fuel, provide air at the correct place, and generally improve combustion. Further, sanderdust firing systems can respond rapidly to changes in boiler load. They can be used to release heat energy quickly to compensate for rapid swings in load, whereas if sanderdust is mixed with other hogged fuel, the response to load swings is less rapid. Furthermore, sanderdust often is not well mixed with hogged fuel. As a result the rates of combustion are spasmodically high when the sanderdust predominates in a mixture, and rates of excess air are high when the proportion of sanderdust is reduced.

Sanderdust Firing

Most difficulties with sanderdust firing occur because of failure to recognize the unique properties of this fuel and to provide for them in system design and operation. The salient properties are the small size of the particles and their low moisture content. Taking these into consideration, one can develop design criteria that allow advantageous use of sanderdust. A well-designed system would control

dust and plugging, provide variable control of feed rate, ensure good particle suspension, locate the particles in the flame, and maintain a pilot light. These features are examined individually.

1. Dust control. Systems for transporting, storing, and feeding must be designed to minimize dust emissions. This is important for control of air pollution as well as for control of fire or explosions.

2. Control of plugging. Plugging generally does not present special problems with sanderdust unless the material is wetted to limit dust emissions. Dry sanderdust flows easily and responds well to the use of vibrators. Bridging can be a problem, but it is easily avoided through proper design of the system.

3. Control of variable feed rate. In burning of sanderdust special attention is needed to ensure constant feed to maintain steady combustion. Control of combustion air is equally important. Because sanderdust burns rapidly, enough air must be supplied at the right place and large quantities of excess air must be avoided. A well-designed system incorporates variable airflows that correspond to the full range of sanderdust feed rates.

4. Good particle suspension. The firing system should separate individual particles of sanderdust as they are injected into the furnace. This is necessary to mix the particles with combustion air. Separation usually is accomplished with swirling vanes or a cyclonic type of feeding system.

5. Location in the flame zone. Sanderdust particles injected directly into the flame are exposed to high temperature long enough to burn completely. If they enter the furnace at a point where they are not exposed to flame temperatures long enough, combustion will not be completed.

6. Pilot light requirements. Many boiler installations incorporate a pilot light system for sanderdust burning. The pilot is located at the point of sanderdust injection. The pilot light probably does not add significantly to the combustion process, but it is a desirable safety feature. The prime function is to prevent explosion in the furnace under fluctuating conditions of operation.

COMBUSTION AIR VARIABLES

Percentage of Excess Air

For complete combustion of hogged fuel each molecule of fuel in the gaseous state must come into contact with one or more molecules of oxygen. Supplying excess air increases the probability of this occuring. There is a limit, however, to the amount of excess air that can be added and still help the combustion reaction. Several factors are influential.

Air that is brought into the combustion chamber is well below flame temperatures. During combustion, it must be heated to combustion temperatures, an increase of up to 1800°F. This process requires heat energy that comes from the combustion. As the amount of incoming air is increased, more energy is taken from the combustion process to heat it. This lowers the temperature in the combustion zone, which slows the rate of the reaction. If the fuel fails to burn completely because of slow reaction rate, air pollutants will be generated.

As the energy requirement to heat incoming air increases with the amount of air introduced, thermal efficiency of the combustion system goes down and more fuel is required to produce a given amount of steam.

As airflow into a furnace increases, the velocity of gases passing through the furnace increases. Furnaces are designed for a range of gas velocities based on an assumed upper limit of excess air, usually 50 percent. If more than 50 percent excess air is introduced, gas velocities in the furnaces may be so high (particularly at high rates of steam generation) that they carry fuel out of the combustion zone. If this occurs and the unburned fuel enters the heat exchange tubes of the boiler, gas temperatures will drop quickly below those required for the combustion reaction to go to completion. The boiler then emits the products of incomplete combustion as air pollutants.

An interrelated effect of high gas velocities caused by excess air is reduction of the residence time of fuel in the combustion zone. Again, the process may be stopped before combustion is completed, and unburned materials will leave the stack as air pollutants.

The rate of gas flow into and out of a furnace increases in linear proportion to the increase in excess air; that is, at 100 percent excess air, roughly twice as much

gas passes through the furnace as at 0 percent excess air. Pressure drop through the system, however, increases exponentially with the gas flow. Movement of this gas requires the operation of forced-draft and induced-draft fans, which in turn requires power. The cost of energy to run these fans is significant. For example, operating a hogged fuel boiler with capacity of 100,000 pounds of steam per hour at 100 percent excess air would require 50 horsepower more than operating the same boiler at 50 percent excess air. Over a year's time at 10 mils per kWh this additional power will cost $3125.

The size of forced-draft and induced-draft systems, including motors, fans, ducts, and dampers, is based on the steam generation rate of the boiler and some reasonable, maximum value of excess air, such as 50 percent. At more than 50 percent (or the design value) excess air, one or more of the system components will be improperly sized for efficient operation. Control of the systems can be lost when components must operate outside their design ranges; improper balance between forced-draft and induced-draft systems can cause pressurizing of the furnace or excessive furnace draft and inability of the air systems to respond to changes in the fuel feed or in load demand.

The size of particulate collection systems also is based on the maximum steam generation rate and some reasonable value of excess air. As with the fan systems, pollution control equipment does not function at its best if gas flow rates deviate from the design values. Too much excess air reduces the collection efficiency of most pollution control systems.

In summary, although some excess air is required for proper combustion, too much excess air can be detrimental for the following reasons.

1. It cools the combustion reaction and slows the rate of reaction.

2. It reduces thermal efficiency.

3. It increases gas velocities across the grates and lifts the fuel from the grates before it burns completely.

4. It reduces residence time in the furnace so that fuels cannot burn completely.

5. It requires costly additional power in the fan system.

6. It can unbalance the air system, causing loss of combustion control, improper pressure conditions in the boiler furnace, and inability of the system to respond to load variation.

7. It reduces the efficiency of pollutant collection equipment if the gas flow exceeds design conditions.

Most designers and manufacturers of hogged fuel boilers identify an optimum range of excess air from 25 to 90 percent. In practice, however, most hogged fuel boilers are

operated at 100 to 150 percent excess air; most of these units would operate more efficiently at lower levels of excess air.

The optimum level of excess air varies among individual boilers. Generally, a unit functions reasonably well at levels from 40 to 75 percent. These values correspond to carbon dioxide levels in the exhaust gases of 14.3 to 11.0 percent. Because of the variations in furnace design, fuel moisture content, steam generation rate, and other factors that affect the combustion process, optimum conditions for excess air cannot always be maintained. Operators should nonetheless be aware of the negative effects of too much excess air.

Control of Excess Air

The first step in controlling excess air is to monitor the products of combustion (carbon dioxide or oxygen). Without instruments to monitor the flue gas constituents, excess air can be controlled only by guesswork. Note that it is necessary to measure either carbon dioxide or oxygen. Measuring both is not necessary.

The signal from a flue gas analyzer can be fed directly to controls for the forced-draft and induced-draft dampers (Figure 23). As an alternative, the signal may be read by the operator, who then adjusts the airflow controls manually,

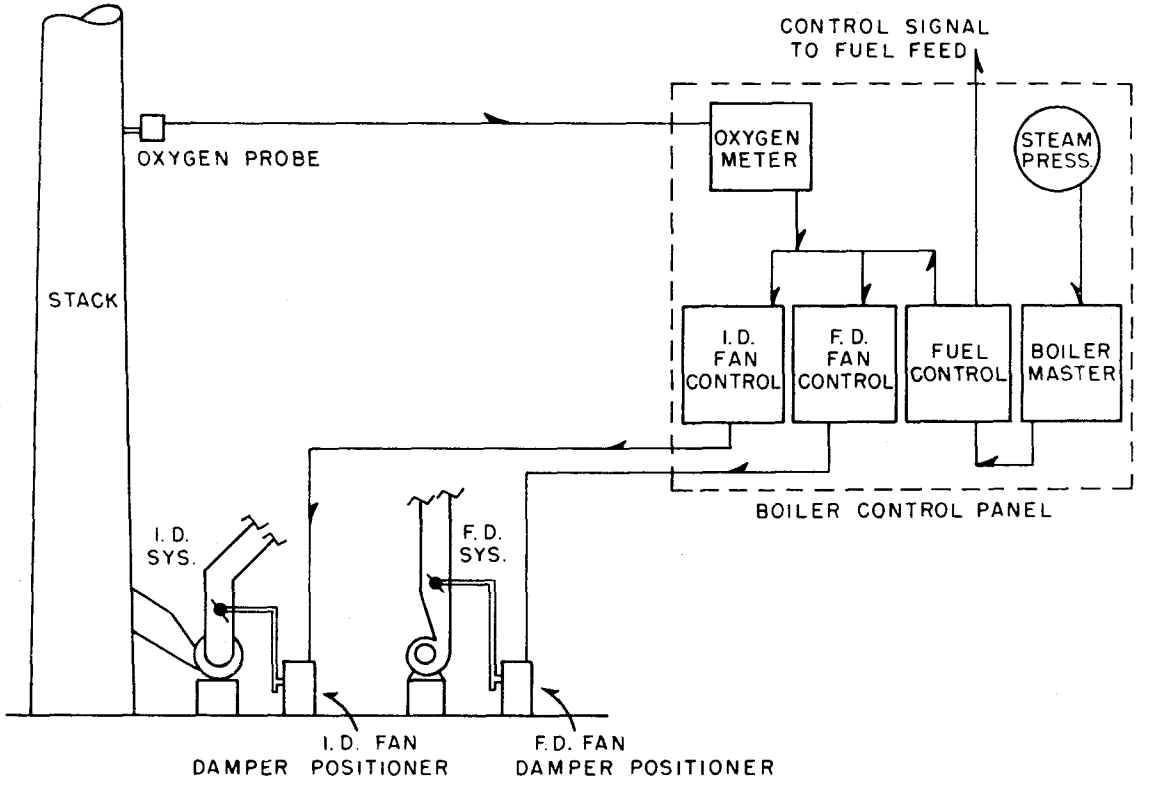

Figure 23. A flue-gas analyzer used to control dampers for induced-draft (I.D.) and forced-draft (F.D.) fan systems[8]

the type of adjustment depending on the boiler design and the available equipment. Obviously, control of the process requires fans, dampers, and positioners, and sufficient instrumentation to provide status data to the operator.

Regulating the percentage of excess air is simple. As the level of carbon dioxide drops, the rates of overfire and underfire airflow are reduced. (Again, this reduction depends on the design of the furnace and the firing equipment available.) For many hogged fuel furnaces, the desired set point for carbon dioxide is about 13.5 percent (or 50 percent excess air). When levels of carbon dioxide go above the set point, the airflow rates should be increased.

Although the concept is simple, continuous control of excess air is complicated by variations in steam generation rate, fuel moisture content, fuel size, fuel heating value, amount of ash buildup on grates and in heat exchangers, and other variables that affect combustion. Even so, a skilled operator, using information provided by continuous flue-gas analysis, can usually correct the system and maintain reasonable combustion.

Air Temperature

Preheating the air entering the combustion zone offers the following advantages: It increases ability of the air to remove moisture from wet fuel; it increases the furnace

temperature, which increases the rate of combustion and reduces formation of air pollutants; it increases overall efficiency of the system by utilizing heat energy that otherwise would be lost up the exhaust stack; and it increases the steam generation capacity.

Air Temperature Control

In most plants, the boiler operator cannot regulate air temperature directly. If the system includes a preheater, it normally is used to full capacity. If there is no preheater, the furnace must function on colder air.

Although the boiler operator usually cannot control the temperature of the forced-draft air system, he can control other air inputs to the furnace. With few exceptions, hogged fuel boiler furnaces are operated at a slightly negative pressure. Therefore, cold ambient air can be pulled in through such openings as inspection ports, clean-out doors, cracks in the casing or refractory, and fuel chutes. It can also enter through inadequate seals around sources of cold air, such as doors, drums, pipes, and soot-blowers.

By closing sources of cold air to the furnace, the operator gains additional control of the combustion process. Not only does he increase combustion-zone temperatures, but he prevents local "cold spots" and gains greater control of

excess air. Note that infiltration (leakage) air has all of the detrimental characteristics of cold excess air, but provides none of the benefits.

Ratio of Overfire to Underfire Air

In most hogged fuel boilers, the incoming air for combustion is split into two ducts, one bringing the air in under the fuel pile or grates and the other bringing air in over the fuel pile. In many spreader-stokers, part of the overfire air is used to pneumatically spread the fuel across the grates. The ratio of the two flows is a parameter of concern, the optimum ratio depending mostly on boiler design and fuel characteristics.

In theory, boilers should function best with 75 percent overfire air and 25 percent underfire air, these values based on proximate analyses of hogged fuel. Roughly 75 percent of the fuel is volatile organic material that pyrolizes to the gaseous state as it goes through the steps of combustion. The combustible gases rise above the solid hogged fuel, mix with air, and burn. Thus, in theory, 75 percent of the air should be supplied above the pile. The remaining 25 percent of the fuel, the fixed carbon, remains on the fuel pile or grate system, where combustion air (25 percent of the total) is supplied from underfire air.

This theoretical scheme, however, does not account for the many variables that affect the combustion process. The

main influences are furnace design (Dutch oven or spreader stoker) and fuel moisture content (moist fuel requires more underfire air). As a result of these influences, many systems operate best with 75 percent underfire air and 25 percent overfire air rather than the theoretical 25/75 ratio.

Controlling the Ratio of Overfire to Underfire Air

The operator controls air distribution by means of fans, air ducts, and dampers, all installed and operated in accordance with furnace design. He is concerned with several operational problems regarding distribution of air in the forced draft system. With wet fuel, he must provide adequate underfire air to help drive off moisture from the wood. With pneumatic-spreader systems, he must provide enough overfire air to distribute the fuel. As ash or fuel builds up on the grates, the flow of underfire airflow is reduced as pressure across the grates and ash diminishes. Reduction of underfire airflow also may entail a proportionate increase in overfire airflow, depending on the fan system. Overfire air should create maximum turbulence without disturbing ash or fuel on the grates. Furthermore, the overfire air must be distributed so as to avoid impingement directly on hot refractory or metal surfaces, and thus to limit damage caused by condensation, thermal stresses, and thermal shock.

Few hogged fuel boilers are equipped with a forced-draft air system that can continuously balance the flows of overfire and underfire air. At most plants the primary control is to keep the grates clear of heavy ash buildup that could adversely increase the pressure drop across the grates. Sealing any leaks in the furnace and air systems also aids in maintaining proper balance of airflows. Deliberate design of high pressure drop (2 to 3 inches of water) across spreader-stoker grates can aid in insuring good distribution of underfire air even when fuel distribution on the grate is not ideal.

Turbulence of Air

For complete combustion, one or more molecules of oxygen must come into direct physical contact with each molecule of gaseous fuel at adequate temperature and residence time. Turbulent gas flow facilitates mixing of the gaseous fuel and oxygen in the furnace. The primary purpose of overfire air jets or nozzles is to provide turbulent flow, which not only enhances the combustion reaction but also prevents formation of dead spaces or quiescent zones in which fuel vapors accumulate. Such accumulations can cause puffing of small explosions in the combustion zone.

Control of Air Turbulence

Turbulent patterns of gas flow are brought about by the position, direction, velocity, and mass flow rates of gases

entering the furnace. Turbulence is high when the gases are sent into the furnace in swirling patterns from high-velocity nozzles, whose position and direction strongly influence the flow pattern. Since these inlet nozzles usually are fixed, the operator has little or no control of the degree of turbulence in the furnace. He can effect minor changes of turbulent flow patterns by varying the ratio of overfire to underfire air. With most hogged fuel boilers, however, control of turbulence in the combustion reaction is handled primarily in the design and engineering stages. Turbulence in installed boilers frequently can be improved by addition of properly located, high-velocity air nozzles.

Forced-Draft and Induced-Draft Systems

The forced-draft air system brings combustion air to the furnace. The complete system includes facilities to deliver preheated air under automatically controlled flow conditions throughout the full range of boiler operations. The induced-draft air system draws combustion products out of the boiler under controlled flow rates and removes entrained air pollutants. Control equipment such as multiple cyclones and scrubbers generally is considered part of the induced-draft system because of the location in the system and the effects on pressure drops and flow rates.

Operation of forced-draft and induced-draft systems directly affects most of the related combustion parameters, such as percentages of excess air, turbulence, and air temperature. Furthermore, the balance between flows in these two systems determines the pressure in the furnace. In most hogged fuel boilers, particularly older installations, a slight negative pressure is maintained in the furnace and heat exchange sections to minimize puffing and to retain fuel and combustion products in the furnace.

Not all hogged fuel boilers operating today are equipped with balanced, automated, forced-draft and induced-draft systems. Many have no forced-draft system at all. Others rely on the natural draft from smoke stacks rather than a controlled induced-draft fan system. Because such installations cannot control the combustion process throughout the full range of operation, incomplete combustion may occur at regular intervals with resultant emissions of smoke, cinders, underburned hydrocarbons, and other air pollutants.

Control of Forced-Draft and Induced-Draft Systems

Forced- and induced-draft fan systems should be operated so as to provide a proper amount of excess air for good combustion. As described earlier, most boilers fired with hogged fuel operate within a range of 40 to 75 percent excess air. Maintaining a slightly negative pressure to

retain the products of combustion is particularly desirable in old furnaces that have many leakage points. Under such circumstances, excessive negative furnace drafts can add undesirable infiltration air. Most new furnaces with completely sealed exterior casings do not require a negative furnace draft. These fan systems should assist in providing turbulence in the combustion zone and should also provide enough air to distribute fuel in spreader-stokers with pneumatic spreaders. The fan systems should perform these functions throughout the full range of steam generating rates, responding rapidly to load variations.

To meet these criteria the fan system must be equipped with calibrated, automatic controls. An operator cannot manually adjust the airflow dampers with the speed or accuracy that is required to maintain air balances throughout the full range of operating loads. Proper maintenance of the controls includes regularly scheduled cleaning, lubricating, and calibration by a competent instrument technician. The boiler operator should be thoroughly familiar with the capabilities of the control systems at his disposal and make full use of them.

Cinder Reinjection Systems

Some plants incorporate a cinder reinjection system on boilers equipped with dry primary collectors. The cinder

reinjection system is located after the heat exchangers and ahead of the stack to collect the solid material removed from the flue gas by the primary collector and return it to the furnace. This material is usually conveyed pneumatically and reinjected, along with the conveying air, above the grates.

Cinders collected in control devices, such as cyclones or multiple cyclones, are difficult to transport, store, and burn. They consist of fixed carbon, small particles of inorganic fly ash, and larger particles of inorganic, incombustible materials such as sand and clay. The percentage of this material that is capable of burning, that is, the fixed carbon, is dependent upon combustion conditions in the furnace. If conditions are good, perhaps only from 10 to 15 percent of the cinders consists of combustible materials. If combustion conditions are poor, then as much as 90 percent of the cinders may be fixed carbon.

The rate of combustion of fixed carbon is substantially lower than the rate of combustion of the volatile materials in wood fuels. As wood undergoes combustion, the volatile materials evaporate to the gaseous phase and burn. In the gaseous phase, they burn more rapidly than does carbon in the solid phase. This difference is important in operation of hogged fuel furnaces because reinjected cinders require

longer residence time to complete combustion. If residence time at high temperature is not sufficient, the unburned cinders will again leave the furnace as potential air pollutants.

The carbon portion of cinders is not mechanically strong. It crushes easily to a fine powder of low density. This usually occurs in rotary screen systems, ahead of the cinder reinjectors, that remove sand and heavier particles. The resultant form of the carbon is dustlike and difficult to handle. It also presents problems when reinjected into the furnace. The small, light particles of carbon can become suspended in the turbulent airflow of the furnace and be carried out of the combustion zone quickly - often before the combustion reaction has had time to go to completion.

Consider two extreme situations involving cinder injection. First, consider a furnace in which combustion is good and only 15 percent of the cinders consists of carbon (Figure 24). Separation of this material in a screening system probably will be only partially effective because the carbon particles are small, much the same size and density as the inorganic fly ash particles. Thus, the screened material that is to be reinjected probably is only 50 percent combustible at most, and only 50 percent of that combustible portion likely will burn. The rest will be carried out of the furnace as "new cinders."

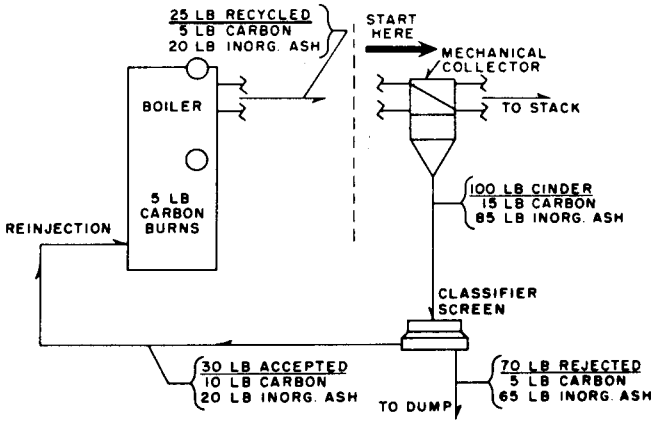

Figure 24. Flow path of 100 pounds of cinders high in inorganic ash, screened and reinjected, with good combustion.

Note the small amount of carbon burned and the recirculation of inorganic ash.

Operating a system like this is difficult to justify in view of the increased rate of particulate emission from the stack and the erosion of boiler tubes and the cinder collection system by the continually recycled inorganic material.

Now consider the opposite extreme, a furnace in which combustion conditions are poor. Cinders collected in the multiple cyclones are 90 percent carbon and the particles are large. After screening, the reinjected material is 95 percent carbon and the particles are reduced in size. When this material is reinjected into a furnace with poor combustion, perhaps 20 to 30 percent of the carbon burns. The remainder is recycled through the system. Because the particles are small, a substantial portion will not be caught in the collectors but will leave the stack as air pollutants.

Two basic things are wrong with this system. First is the attempt to burn, in an already poor combustion situation, a material that does not burn well. Second is the amount of inorganic, incombustible material, which is the same as in the first example; this material is recycled through the system, causing erosion and higher particulate loading.

Cinder reinjection is practiced in spite of these disadvantages because reinjection helps to solve a serious

problem of solid waste. For example, a boiler that is designed for a capacity of 100,000 pounds per hour on hogged fuel probably emits 800 to 900 pounds of cinders per hour, of which some 300 to 400 pounds per hour is combustible. Reinjection reduces the solid waste problem in two ways. First, it reduces the total volume by the amount that is combusted. Second, it disposes of the remainder of the ash by emitting it to the atmosphere as particulate matter. Thus, a solid waste problem is reduced by increasing the emissions of airborne wastes.

One type of boiler developed recently relies heavily upon cinder reinjection for proper operation. This boiler is designed for high gas velocities through the heat exchange section to prevent buildup of soot on the tubes. The cinder-ash material continually impinges upon the tube surfaces in an erosive cleaning action. A centrifugal particle collector then removes the cinders and ash after the air heater and sends them to a vibrating screen separator. The cinders are taken from the top of the screens and returned to the furnace, and the fine ash is collected and removed after it passes through the vibrating screens. Approximately six percent of the heat input is from the reinjected cinders and no soot blowing is necessary.

New designs, then may reduce the detrimental effects of cinder reinjection and optimize its advantages. Alternatives to reinjection to reduce the burden of solid wastes include use of the cinders as landfill, as raw material for charcoal briquets, as filler in concrete blocks and roadways, and as a soil conditioner.

OPERATOR VARIABLES

Soot and ash deposits must be removed from the furnace and heat exchanger tubes regularly to maintain good combustion and heat transfer. Failure to remove these materials causes partial blocking of the gas passages. If the grates are plugged, combustion air will be inadequate in localized parts of the furnace, leading to loss of steam generating capacity, loss of efficiency, and an increase in pollutant emissions. Plugging of the tube passages brings similar results.

Soot blowing and grate cleaning are regularly scheduled at most plants. The frequency depends on content of fuel ash, combustion efficiency, furnace design, average rate of steam generation, steam demand, local control regulations, and the operator's initiative.

The important point is that a clean boiler generates heat more efficiently and pollutes less than one that is fouled with ash and soot. The operator has some control over the cleanliness of a boiler, but he has less control over other significant combustion factors such as basic furnace design, over-all maintenance, steam generation rate, and water level.

The pronounced effects of boiler design, maintenance, and steam generation rate on the total combustion pattern have been discussed in detail. Many operators report that variations in water level in the steam drum also strongly affect the combustion rate. Their experience indicates that a responsive, automatic, liquid-level control system on the feed-water system at the steam drum is helpful in controlling furnace temperatures, particularly in water-walled, spreader-stoker systems.

In all instances, the experience and judgement of the operator contribute greatly to the efficiency of plant operation. His diligence in understanding and applying the basic principles outlined in this section can make the difference between a marginal operation and one that is efficient, safe, and environmentally acceptable.

5.0 PARTICULATE EMISSIONS

Particulate emissions from wood-fired boilers may be either solid or liquid, although the solid matter is predominant. They consist of inorganic materials, unburned hydrocarbons, and unburned carbon. Size of the particles can range from submicron "smoke" particles to pieces of wood or char 1/2 inch or larger. The material is usually chemically stable as it enters the atmosphere, but some boilers emit still-burning particles of wood that may be observed at night as a discharge of glowing sparks. The particulate matter may be soluble in water (such as salts) or completely insoluble (such as unburned carbon).

Regulations covering particulate emissions are usually nonspecific regarding chemical and physical properties. Most are concerned only with the amount of concentration of emissions although regulations in some states incorporate design or construction standards.

REGULATIONS FOR PARTICULATE EMISSIONS

Emission regulations for wood-fired boilers may be set by state or regional agencies. As yet, the U.S. Environmental Protection Agency has not promulgated New Source

Performance Standards for wood-fired boilers. Most agencies require a permit to operate, contingent upon the boiler meeting the agency regulations. Although the emission regulations vary among the agencies, many similarities may be noted.

Particulate Concentration

Grains per Standard Cubic Feet

Particulate concentration may be expressed as the mass of particulate matter per cubic volume of flue gas. This is usually normalized to 12 percent CO_2 to account for dilution by excess air at the furnace or leakage into the furnace or boiler. For wood fuels 12 percent CO_2 in the flue gas corresponds to approximately 68 percent excess air. A typical regulation might limit the maximum particulate emission to 0.2 grain per standard cubic foot of gas, corrected to 12 percent CO_2, for existing boilers and 0.1 grain per standard cubic foot of gas, corrected to 12 percent CO_2, for new boilers constructed after a certain date. The regulation may state that the standard cubic foot is "dry," meaning that the water volume present in the gas phase must be subtracted. A regulation that does not state whether the standard cubic foot is "wet" or "dry" leaves the matter open to interpretation.

The "standard" cubic foot is also ambiguous unless it is defined. The "standard" temperature for a cubic foot may be 32, 60, 68, or 70°F, or 20°C, which is equivalent to 68°F. The "standard" pressure for the same cubic foot may be expressed as 29.92 inches of mercury, which is the same as 14.7 pounds per square inch absolute or 1 atmosphere. Some agencies, however, use 30.00 inches of mercury as pressure for the "standard" cubic foot.

Consider an example in which a stack sample is collected at 8 percent CO_2, 400°F, and 29.75 inches of mercury with a water vapor content of 15 percent by volume. If the particulate loading is 0.05 grain per cubic foot at stack gas conditions, what is the at "standard" conditions of 12 percent CO_2, 68°F, 29.92 inches of mercury, and dry? The following calculations show the method of correction to standard conditions:

$$\frac{0.05 \text{ grain}}{\text{test cubic foot}} \times \frac{12 \text{ percent } CO_2}{8 \text{ percent } CO_2} \times \frac{460 + 400°F}{460 + 68°F} \times$$

$$\frac{29.92 \text{ inches}}{29.74 \text{ inches}} \times \frac{100 \text{ test ft}^3}{85 \text{ dry ft}^3} =$$

$$\frac{0.14 \text{ grain}}{\text{standard cubic foot}} \quad @ \text{ 12 percent } CO_2$$

The original grain loading appeared quite low; when it was corrected and expressed in relation to the normalized "standard" cubic foot, it was nearly three times greater.

Pounds per Million Btu

Expressing an emission standard in terms of mass per unit of energy overcomes the problems of the "standard" cubic foot of flue gas and normalizing to 12 percent CO_2. A regulation might specify an emission standard of 0.2 pound of particulate per million Btu of input energy. Some agencies might allow a higher value (0.5 pound per million Btu) for boilers installed or operating before a certain date.

One flaw in this emission standard is in the definition input energy. One needs to know whether the higher or lower heating value is used, whether a correction is made for the energy used to evaporate the water from wet fuel, and whether the fuel input should be weighed or calculated from values for flue gas volume and gas analysis. The regulations should specify these considerations.

Pounds per Pound of Fuel or Ton of Fuel

Some agencies specify allowable particulate emissions based upon fuel throughput. These values coincide with the values used in emission inventories. Problems occur, however, because it is difficult, if not impossible, to weigh the fuel going to a wood-fired boiler. Again, the regulation also should specify what corrections should be made for the weight of moisture and whether flue gas volumes and gas analyses can be used to calculate the mass of fuel.

Mass of Emissions

The mass emission per unit of process weight is usually included with the allowable mass emission for the entire mill or plant. If a process weight chart shows an allowable atmospheric discharge for the mill, the boiler emissions may be included along with those from cyclones or dryers to determine the total for the operation. If the boiler is the only source at the mill, it could emit particulate up to the maximum allowed by the process weight chart and still be legal. Again, it is obvious that the regulation should be well-defined.

Opacity

Regulation of boilers by means of visual emission standards usually refers to the opacity of the effluent from the boiler. A certified observer must "read" the opacity periodically and determine whether the boiler is in compliance. Typical regulations may state, "No visual emissions exceeding 20 percent opacity will be permitted except for 3 minutes in any 1 hour." Some agencies may allow 40 percent opacity for existing boilers or boilers located in areas of low population density. The regulation may state the time exemption differently or may clarify or further define it.

The observer making the opacity readings must be trained and certified by the control agency. He should be aware

that opacity readings are affected by such things as diameter of the stack exit, moisture content of the plume, particle size and color, background lighting and textures, position of the sun, and color of the sky.

Certification schools for smoke and opacity readings have been set up across the country. Classes are held throughout the year to meet the demand. The classes consist of two sessions, first to learn the theory and limitations of the techniques, and second to gain experience in the field by reading plume opacities. Examinations are held at the end of each session to determine degree of competence. Recertification of ability in smoke and opacity reading is required at intervals ranging from 6 months to 1 year.

Particle Size

Some agencies have established limits on the maximum size of particles that may be emitted by boilers. The limitation usually is set at 250 microns. The purpose is to prevent emission of large pieces of unburned carbon, which act as a soiling nuisance. Consideration now is being given to establishing regulations on the maximum allowable concentration of smaller particles (less than 10 microns), since many studies indicate that smaller particles present the greatest hazard to human health.

Particle size measurement requires sophisticated equipment for collection and analysis, as well as skill in analytical techniques. Representative sampling for particulate matter can be achieved only if the particulate matter enters the sampling system at the same velocity as the airstream in which it is entrained. This is called isokinetic sampling.

Analysis of the samples usually is done with a microscope in the laboratory. A minimum of 100 particles should be measured to determine the size distribution of particles in each sample. Distribution is reported in terms of the percentages of particles smaller than a given size.

When particles are collected in impaction systems, analyses for size and weight distribution is done by weighing the samples collected in each section of the impactor. This method also allows a determination of mean size and size distribution of the particles, based on the weight distribution of the sample.

Nuisance Regulations

Most agencies regulate nuisance emissions, usually in a statement to the effect that no process or operation shall emit materials that are a nuisance to the surrounding property or community. Such regulations are not directed specifically toward boilers fired with hogged fuel. They are cited occasionally, however, if fly ash or unburned carbon from a stack becomes a public nuisance.

Regulatory Problems

The regulations regarding particulate emissions from boilers are usually written for the general case of a single boiler on a single stack, operating routinely. Some boilers, however, are not operated in this manner. When two or more boilers are connected by breeching to the same stack, the visual opacity readings at the stack exit indicate only the conditions of the combined flue gases. The emission of dense smoke may be caused by one boiler or by several. A measurement of particulate loading in the stack is equally nonspecific. The loadings must be measured in the breeching from each boiler to determine the individual boiler emissions.

A second type of nonroutine situation involves the exhausting of boiler flue gases through another process. As energy conservation becomes more important, more mills and plants are looking for potential uses of the hot flue gas, for example as input to the particle dryer at a particleboard or hardboard plant. The question then becomes whether the flue gas leaving the dryer is classified as a boiler or a dryer emission. Similarly, if the flue gas is ducted to a system for predrying of the fuel before it enters the furnace, is exhaust from the fuel dryer classed as a boiler emission or another process emission? Many regulations leave these questions unanswered.

Soot blowing and grate cleaning can introduce further complications. Emissions of particulate matter usually increase severalfold during intermittant soot blowing and intermittent cleaning of grates. An emission sample collected during these periods is likely to show excessive particulate loading, as would an opacity reading. For this reason soot is usually blown at about midnight, and no soot blowing or grate cleaning is practiced during emission tests.

PARTICULATE MEASUREMENT METHODS

Compliance with emission standards is usually determined by sampling at the polluting source. Source sampling is done by EPA methods or by methods specifically endorsed by the EPA.

Sampling for particulates involves a problem not encountered in sampling for gases. Particles moving in a gas stream tend to follow the streamlines, but the particles have a greater inertia than the gas molecules. Anytime a streamline makes a bend, the particle tends to continue on its original path, deviating from the streamline. This accurate sampling of particulate concentrations must be done isokinetically; that is, the probe must draw a sample at the same velocity as the gas stream being sampled. If the sampling velocity is less than the gas flow velocity, the

streamlines will bend out and around the probe inlet. Instead of following these streamlines the particles will tend to continue in a straight line to the probe inlet. The analysis will show falsely high particulate loading for the volume of gas sampled. If the sampling velocity is greater than the gas flow velocity, the opposite will occur; the streamlines will bend into the probe inlet, and the particles will tend to continue past it. The analysis will show a falsely low particulate loading for the volume of gas sampled.

EPA Method 5

In 1971 the EPA adopted a standard method for testing of new fossil-fuel-fired boilers.[15] Many control agencies have adopted this as the only acceptable method for sampling combustion sources. It has not been determined that this is the preferred method for sampling of wood-fired boilers.

The EPA Method 5 sampling system is a modification of one developed by the U.S. Bureau of Mines about 60 years ago. Figure 25 is a schematic diagram of the EPA sampling train.

The system collects two types of materials: the filter collects the solid particulates, and liquids that condense at filter temperature, and the impingers collect materials that condense at impinger temperature. Everything collected

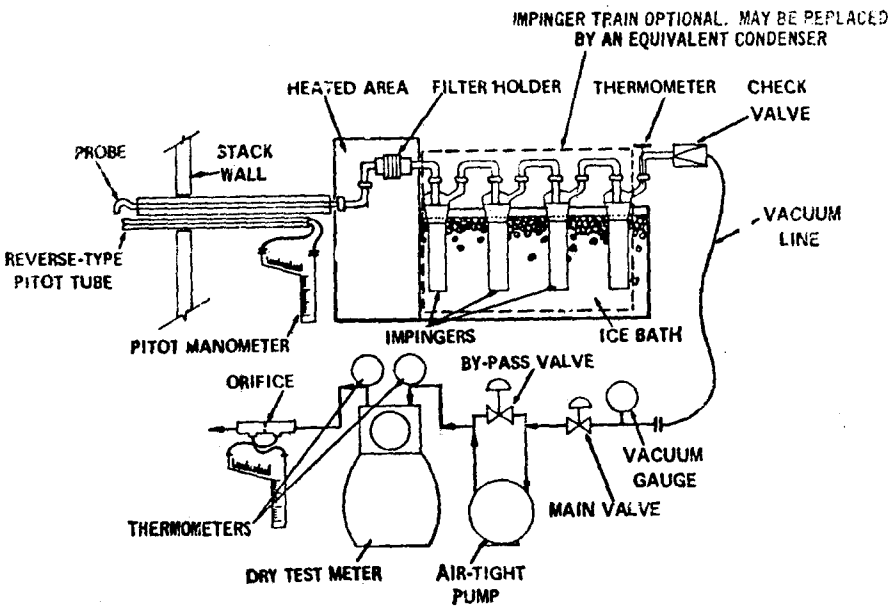

Figure 25. Method 5 sampling system[15]

up to and including the filter is called the "front-half" catch. Everything collected behind the filter is considered the "back-half" catch. In sampling New Source Performance Standards the EPA measures only the "front-half" catch using the impinger train only to determine the amount of water vapor in the sample and to protect the pump and gas meter from corrosive, condensible vapors. Many agencies, however, require reporting of the total catch (front and back) for emission testing of combustion sources.

The EPA Method 5 train samples at approximately 1 cubic foot per minute over collection periods of about 2 hours. This relatively long sampling period requires that the boiler operator hold a steady load to obtain valid test results.

High-Volume Method

The high-volume stack sampler was developed to obtain a sample rapidly during actual operation. It provides a valid sample from a wood-fired boiler in 1 or 2 minutes. Other advantages of the sampling train are discussed by Boubel.[16] Many producers of forest products use the high-volume sampling train to test ambient temperature sources, and they have naturally adopted its use to their wood-fired combustion sources. Several state and regional control agencies have accepted results obtained with the high-volume system as valid for determining compliance.

The latest high-volume sampling train incorporate an electronic computer to adjust the sample flow rate automatically for isokinetic sampling. The computer displays the flow in cubic feet per minute and total cubic feet sampled. This sampling train has been used successfully on several wood-fired boilers.[17]

One definite advantage of the high-volume system for sampling wood-fired boilers is the large probe. The large flow volumes permit isokinetic sampling with probes of 15/16 to 1 7/8 inches in diameter. The advantage is that a boiler with no particulate collection equipment may emit particulate as large as 1/2 inch on a side and the high-volume sampler collects these particles whereas low-volume trains with small probes (such as EPA Method 5) reject them.

The high-volume sampler appears to be the method of choice for use with wood-fired boilers. Comparison sampling with this sampler and the Method 5 sampler has shown no significant difference in particulate emissions from wood-fired boilers (these studies are described later). The system allows accurate calculation of the moisture in the stack gas, and since wood contains practically no sulfur, the flue gas does not attack the sampler. The flow measurement system is an orifice plate that determines the flow of all gases (even water vapor) accurately. The cost of testing with the high-volume system is considerably lower than that for other methods currently in use.

Opacity Measurement

Regulation covering the opacity of emissions from wood-fired boilers usually specify readings by a qualified observer. Smoke density readings by qualified inspectors have been accepted and upheld in most court actions. Some agencies regulate only opacity, rather than particulate loading, because source testing is expensive and complaints by citizens usually are concerned with visual emissions.

Certified Observers

Emission regulations based on opacity, optical density, or Ringlemann number require plume readings by a trained and certified observer. Because wood smoke is sometimes light grey or white, the observer must be qualified by a smoke school to read both "white" and "black" plumes. The observer must also be experienced in reading moist plumes because the water vapor content of flue gas from wood-fired boilers is high. The observer must keep accurate records of all conditions at the time of the readings. Reexamination is required before expiration of a certificate if an observer's readings are to be accepted in court. Certification periods usually cover 6 months or 1 year.

Opacity Monitors

Although opacity monitors are useful for informing the boiler operator of the visual condition of the plume, they

involve several inherent difficulties. One is that substantial errors can occur because of differences in geometry of the stack and the monitoring system. Also, being mounted in the boiler breeching, the monitors may be subject to high temperature and vibration and thus may need frequent maintenance and recalibration. A further difficulty is that particulate emissions tend to coat the protective lenses on the optical system, causing false readings of opacity. Lenses must be cleaned frequently to keep the instruments functional. The most expensive commercial models are equipped with continuous purge systems to overcome this problem.

Opacity is dependent upon many factors, such as gas temperature (density), size and concentration of particulate matter, relative humidity, and length of light path. Should any of these parameters differ at the monitoring location and the discharge point of the stack, the monitor would not indicate opacity at the discharge point. Because opacity is strongly dependent on size of the particles in the gas stream, measurements of opacity cannot be used as measurements of particle concentration. Attempts to relate concentrations of flue gas particles and opacity have not been highly successful. Some are discussed later.

The cost of opacity monitors ranges widely. The least expensive units can be installed for less than $500. At the

other end of the scale, the investment can exceed $8500. Such a system would include automatic recalibration at regular intervals, continuous purge systems to keep the lenses clean, automatic correction for geometric differences in the monitoring location and the stack outlet, low maintenance, and high reliability.

Some commercial monitors measure optical density rather than opacity. Opacity is measured on a percentage scale, whereas optical density is scaled from zero to infinity. The relationship is illustrated in Figure 26, which shows that zero percent opacity corresponds to zero optical density. The term "absorbance" is used interchangeably with optical density.

THEORETICAL EMISSIONS

Particulate emissions from a wood-fired boiler may be approximated by calculation. The following example problem will illustrate the method:

ASSUMPTIONS - Fuel is Douglas fir bark with 50 percent moisture and 1 percent ash.

Fuel feed rate is 20,000 pounds of wet fuel per hour.

Heating value is 9000 Btu per wet pound.

Excess air is 50 percent.

Half of the ash leaves the stack as fly ash containing 25 percent carbon.

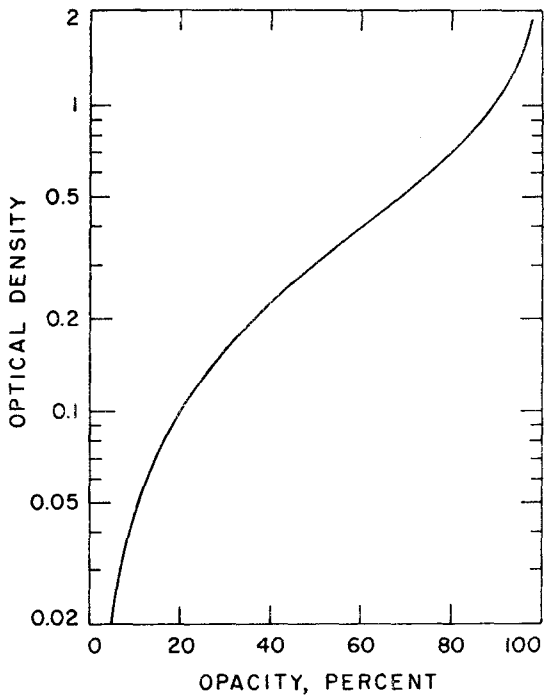

Figure 26. Relation of opacity to optical density[8]

The first calculation is to determine the gas flow, in scfm, through the boiler.

At 0 percent excess air, 1 dry pound of Douglas fir bark requires 6.17 pounds of air for complete combustion.

$$50 \text{ percent excess air} = 1.5\ (6.17) = \frac{9.26 \text{ lb air}}{\text{lb dry fuel}}$$

Neglecting any ash, the flue gas (dry) is composed of the 9.26 pounds of air plus the pound of dry fuel (after combustion), minus the water from hydrogen combustion; so:

$$\frac{9.26 \text{ lb of air}}{\text{lb of fuel}} + 0.94 \text{ lb fuel} = \frac{10.20 \text{ lb flue gas}}{\text{lb dry fuel}}$$

The volume of flue gas may be calculated using mol percentage, but a good approximation is 13 standard cubic feet per pound.

$$\frac{10.20 \text{ lb flue gas}}{\text{lb of dry fuel}} \times \frac{13 \text{ standard cubic feet}}{\text{lb of flue gas}} =$$

132.6 standard cubic feet/pound of dry fuel

The fuel rate is:

$$\frac{20{,}000 \text{ lb wet fuel}}{\text{hour}} \times \frac{0.5 \text{ lb dry fuel}}{\text{lb wet fuel}} =$$

$$\frac{10{,}000 \text{ lb dry fuel}}{\text{hour}}$$

The fuel gas volume (dry) is:

$$\frac{132.6 \text{ scf}}{\text{lb dry fuel}} \times \frac{10{,}000 \text{ lb dry fuel}}{\text{hour}} =$$

1,320,000 standard cubic feet per hour

The particulate as fly ash is:

$$\frac{20{,}000 \text{ lb wet fuel}}{\text{hour}} \times \frac{0.01 \text{ lb ash}}{\text{lb wet fuel}} \times$$

$$\frac{1 \text{ lb fly ash}}{2 \text{ lb ash}} = \frac{100 \text{ lb fly ash}}{\text{hour}}$$

The emission may now be expressed in terms approximate to those of the regulations:

1. Grains per standard cubic foot at 50 percent excess air:

$$\frac{100 \text{ lb}}{\text{hour}} \times \frac{7000 \text{ grains}}{\text{lb}} \times \frac{\text{hour}}{1{,}320{,}000 \text{ scf}} = \frac{0.53 \text{ grain}}{\text{scf}}$$

2. Pounds per million Btu:

$$\frac{100 \text{ lb}}{\text{hour}} \times \frac{\text{hour}}{20{,}000 \text{ lb wet fuel}} \times \frac{\text{lb wet fuel}}{9000 \text{ Btu}} \times$$

$$\frac{10^6 \text{ Btu}}{\text{million Btu}} = \frac{0.56 \text{ lb}}{\text{million Btu}}$$

3. Pounds per ton of fuel:

$$\frac{100 \text{ lb}}{\text{hour}} \times \frac{\text{hour}}{20{,}000 \text{ lb wet fuel}} \times \frac{2000 \text{ lb wet fuel}}{\text{ton of wet fuel}} =$$

$$\frac{10 \text{ lb}}{\text{ton of wet fuel}}$$

4. Pounds per hour:

From previous calculation $= \frac{100 \text{ lb fly ash}}{\text{hour}}$

These simple calculations show clearly that some method of particulate control will be required to meet any realistic emission standard.

MEASURED EMISSIONS

Measurements of emissions from boilers have shown the same order of magnitude as the calculated emissions. A boiler with no particulate removal equipment, firing a dirty fuel at approximately its rated capacity, may emit more than 1.0 grain per standard cubic foot corrected to 12 percent CO_2. A boiler with primary and secondary flue gas cleaning systems, firing a relatively clean fuel, may emit as little as 0.01 grain per standard cubic foot corrected to 12 percent CO_2. The boiler emitting 1.0 grain/scf would not meet any emission standard, whereas the boiler emitting 0.01 grain/scf would meet all standards.

EPA Method 5 Testing

As stated earlier, in EPA Method 5 sampling of fossil-fuel-fired boilers for compliance with New Source Performance Standards, only the front half (ahead of the impinger train) is considered as particulate. Many states require reporting of the total catch, while others require reporting only the front half. It may be useful, then, to consider what portion of the particulate emissions is collected in the impinger train (back half). For wood-fired boilers, that portion is approximately 5 to 10 percent of the total. Although some values as high as 25 percent have been reported, these are probably due to leaks in the filter section that allowed the particulate to reach the impingers.

Usually the ratio of front- to back-half catch can be determined by careful examination of the data. Table 14 shows data from one series of tests recently reported by Morford.[18] Front-half catch and back-half catch were reported separately for all runs. This tabulation indicates that 93 percent of the catch was in the front half and 7 percent in the impinger train.

In considering the relative importance of the back-half catch, one must also consider the over-all accuracy of the method. It has been reported[5] that the data from EPA Method 5 tests are probably accurate within ±25 percent. In view of the wide range, it seems trivial to debate the inclusion of a portion of sample amounting to 7 percent.

Table 15 compiles results of 135 particulate emission tests of wood-fired boilers in Oregon and Washington since 1965.[19] The data represent both front- and back-half catch, as required in these states. The tests encompass a wide variety of boilers firing different wood and bark fuels, operating at light to heavy steam loads, with and without particulate controls. Figure 27 summarizes these emissions data in graphic form.

High-Volume Testing

Since the moisture in flue gases of a wood-fired boiler may be calculated, a valid sample from a wood-fired boiler

Table 14. EPA METHOD 5 DATA AS REPORTED BY MORFORD[18]

Test		Total catch, grain/scf[a]	Front-half catch grain/scf[a]	Front-half catch % of total
EWEB No. 2	Morning	0.157	0.140	89.17
	Afternoon	0.147	0.135	91.84
EWEB No. 3[1]	Morning	0.197	0.162	82.23
	Afternoon	0.405	0.364	89.88
EWEB No. 3[2]	Morning	0.174	0.136	78.16[b]
	Afternoon	0.306	0.235	76.80[b]
U of O No. 1	Morning	0.246	0.235	95.53
	Afternoon	0.244	0.233	95.49
U of O No. 3	Morning	0.120	0.117	97.50
	Afternoon	0.116	0.114	95.49
GP No. 1	Morning	0.070	0.064	91.43
	Afternoon	0.118	0.108	91.53
GP No. 2	Morning	0.242	0.233	96.28
	Afternoon	0.288	0.275	95.49
Average		0.202	0.182	92.86

[a] At 12 percent CO_2.

[b] Omitted from average because of leaking filters.

Table 15. EPA METHOD 5 TESTS ON HOG FUEL BOILER INSTALLATIONS[a] IN OREGON AND WASHINGTON[19]

gr/scf[b]	lb part. ton fuel	gr/scf[b]	lb part. ton fuel	gr/scf[b]	lb part. ton fuel
0.13	5.79	0.16	7.14	0.126	5.62
0.07	3.12	0.08	3.57	0.0219	0.98
0.063	2.82	0.17	7.58	0.0106	0.47
0.82	36.54	0.11	4.9	0.184	8.2
0.13	5.79	0.17	7.58	0.377	16.81
0.238	10.61	0.05	2.22	0.236	10.51
0.115	5.12	0.10	4.45	0.222	9.89
0.19	8.46	1.23	40.0	0.163	7.26
0.075	3.34	0.68	26.0	0.150	6.69
0.175	7.81	0.91	36.0	0.165	7.36
0.195	3.69	1.27	46.0	0.136	6.06
0.11	4.90	1.12	32.0	0.603	26.88
0.069	3.07	0.17	8.4	1.17	52.16
0.220	9.81	0.17	8.2	0.104	4.64
0.113	5.04	0.07	2.64	0.177	7.89
0.143	6.37	0.098	3.68	0.154	6.86
0.38	16.94	0.098	3.72	0.126	5.62
0.42	18.72	0.149	5.4	0.149	6.64
0.192	8.56	0.139	6.6	0.199	8.86
0.15	6.69	0.237	9.2	0.237	10.56
0.39	17.38	0.357	13.0	9.351	15.92
0.16	7.14	0.184	7.2	0.092	4.10
0.095	4.24	0.374	12.4	0.136	6.06
0.064	2.85	0.102	3.8	0.167	7.44
0.17	7.58	0.199	7.6	0.171	7.62
0.19	8.46	0.326	13.0	0.184	8.21
0.16	7.14	0.518	19.6	0.374	16.67
0.13	5.79	0.191	4.8	0.326	14.53
0.09	4.02	0.163	4.6	0.518	23.09
0.10	4.46	0.10	4.0	0.191	8.51
0.29	12.93	0.140	5.0	0.163	7.26
0.21	9.36	0.141	5.0	0.018	0.8
0.31	13.82	0.154	5.96	0.008	0.35
0.22	9.81	0.08	3.0	0.08	3.57
0.67	29.86	0.07	2.6	0.07	3.07
0.10	4.46	0.17	6.7	0.17	7.58
0.16	7.14	0.32	12.34	0.32	14.27
0.30	13.38	0.092	4.1	0.067	2.99
0.43	19.17	0.136	5.4	0.098	4.37
0.27	12.03	0.69	16.54	0.102	4.54
0.46	20.50	0.62	20.6	0.199	8.86
0.51	22.74	0.144	6.6	0.140	6.24
0.33	14.70	0.174	5.48	0.141	6.29
0.36	16.05	0.104	4.64	0.184	8.21
0.12	5.34	0.177	7.89	0.377	16.80

[a] These boilers are not identified by type, size, or owner.

[b] At 12 percent CO_2.

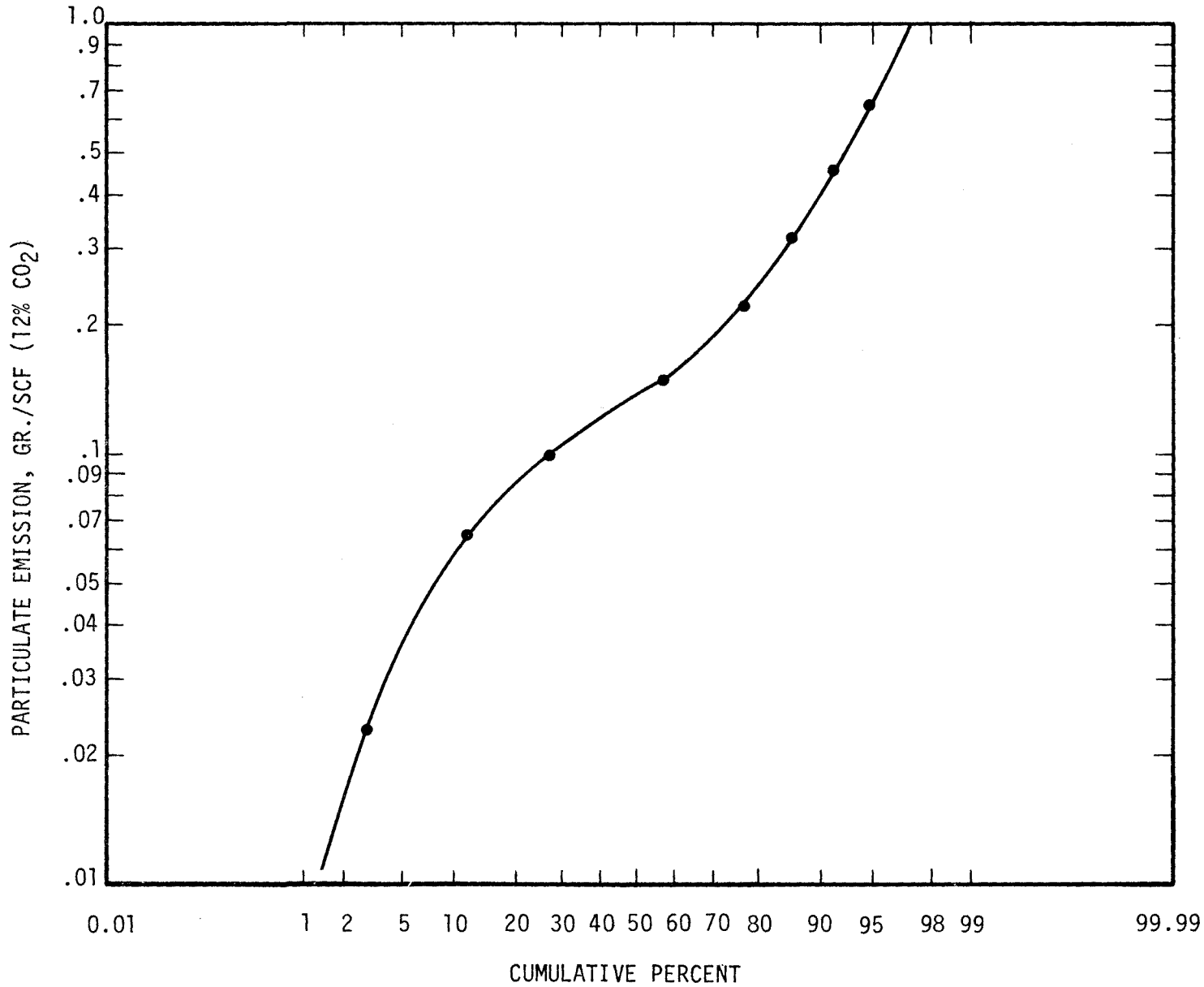

Figure 27. 135 EPA Method 5 tests in Oregon and Washington[19]

stack can be obtained by use of a probe followed by a filter and metering section, as in a high-volume sampler. With this sampler several samples can be taken in a single day for statistical analysis or for following intentional changes of boiler load or combustion conditions. Some states accept this high-volume sampling data for compliance testing. In states requiring compliance tests by EPA Method 5, many companies use the high-volume sampler for precompliance testing and adjustment of the boiler before undertaking the expensive EPA Method 5 test.[16,17,18]

High-Volume, Steady-State Tests

Because the high-volume system provides a valid sample in 1 or 2 minutes, several samples can be obtained at relatively steady boiler loads for statistical analysis. The test results can then be expressed in terms of a mean emission loading with a standard deviation, which is much more meaningful than a single test result number. Table 16 summarizes results of several such tests performed over the past 10 years by Boubel and others.[17,18]

The table indicates that six to eight tests generally produce a standard deviation of about 10 to 20 percent of the mean. Two tests produce a higher standard deviation, 30 to 60 percent of the mean. For an accurate picture of particulate emissions, probably at least six tests should be run at each boiler loading.

Table 16. HIGH-VOLUME TESTS OF WOOD-FIRED BOILERS AT STEADY LOADING[17,18]

Code letter of boiler	Boiler load, % of rating	Total no. of tests	Mean loading, gr/scf at 12% CO_2	Std. deviation, gr/scf at 12% CO_2
A	30	8	0.204	0.019
B	82	8	0.223	0.090
B	47	6	0.265	0.032
C	75	8	0.240	0.030
D	75	7	0.106	0.010
E	46	5	0.113	0.032
F	46	6	0.246	0.063
G	33	3	0.169	0.020
G	75	3	0.132	0.021
G	83	6	0.176	0.022
H	100	6	0.524	0.041
I	67	6	0.138	0.017
J	42	4	0.112	0.012
K	75	6	0.204	0.049
L	67	3	0.384	0.047
L	92	3	2.091	0.462
M	67	3	0.403	0.079
M	92	3	0.739	0.004
N	60	2	0.942	0.376
N	80	2	0.913	0.341
N	100	2	1.385	0.030
O	100	3	0.774	0.052
P	100	2	0.189	0.101
Q	100	2	0.567	0.019
R	100	2	0.115	0.075
S	100	2	0.626	0.183

High-Volume Tests at Varying Conditions

Testing with the high volume sampler is rapid enough that plant personnel can vary the operating parameters to determine their effects on particulate emissions. Table 17 shows the effects of varying both load and excess air on a boiler during 1 day of testing.

Table 17. HIGH-VOLUME TESTS OF A WOOD-FIRED BOILER AT VARIABLE LOADS AND EXCESS AIR SETTINGS (BOILER 5)

Steam load, % of rating	Excess air, %	Particulate emissions, gr/scf at 12% CO_2
35%	400	0.727
35%	165	0.174
55%	180	0.418
55%	145	0.227
55%	105	0.184
100%	45	0.496
100%	35	0.755

High-volume testing also allows determination of particulate loadings before and after a control device to determine its efficiency. The boiler must be held at a steady state for only minutes. Table 18 shows results of an efficiency test of a centrifugal particulate collector, measured with a high-volume sampler. The effect of varying the boiler loading shows in particulate emissions both before and after the collector. The efficiency of the collector increased as the loading increased, the expected trend for an inertial collector.

Table 18. RESULTS OF EFFICIENCY TEST OF CENTRIFUGAL COLLECTOR ON WOOD-FIRED BOILER (BOILER K)

Boiler load, % of rating	Collector loading, gr/scf		Collector efficiency, %
	Inlet	Outlet	
54	0.099	0.080	19
76	0.170	0.091	46
100	0.213	0.102	52

When the fuel load on a wood-fired boiler is changed, it is probable that emissions will change. For this reason it is desirable to test a boiler at both its normal operating load and its rated capacity. High-volume testing is rapid enough to indicate the emission pattern of a boiler as the load is changed.

Table 19 shows the results of testing three separate boilers at one plant, at their normal and rated loads. The spreader stoker does not seem to be as sensitive to load change as are the two Dutch ovens. Note that all three boilers are emitting excessive particulate at all loads. The plant installed new particulate control devices on the basis of these tests.

The high-volume sampler was used to test one wood-fired boiler to show the harmful effect of cinder reinjection. Two tests were made with reinjection, then the reinjection

Table 19. PARTICULATE EMISSIONS OF THREE BOILERS AT VARIOUS LOADS

(Each test is average of two or three individual tests)

Boiler type and code letter	Boiler load, % of rating	Particulate emission, gr/scf at 12% CO_2
Dutch oven (L)	73	0.384
Dutch oven (L)	100	2.242
Dutch oven (M)	73	0.403
Dutch oven (M)	100	0.739
Spreader stoker (N)	60	0.942
Spreader stoker (N)	80	0.913
Spreader stoker (N)	100	1.385

Table 20. PARTICULATE EMISSIONS FROM A SMALL SPREADER STOKER WITH AND WITHOUT CINDER REINJECTION (BOILER 6)

Sample no.	Reinjection	Particulate emission, gr/scf at 12% CO_2
1	Yes	0.1482
2	Yes	0.1494
Average	Yes	0.1488
3	No	0.1287
4	No	0.1133
Average	No	0.1210

system was inactivated for two more tests. Results are shown in Table 20. Although this boiler did not meet a grain loading standard of 0.1 grain per scf at 12 percent CO_2, the particulate emissions decreased by 20 percent without cinder reinjection.

Particle Size Analysis

Samples collected in impaction systems may be analyzed for particle and weight distribution by weighing the portions collected in each section of the impactor. Determination of mean size distribution of the particles is based on the weight distribution of the sample.

Wood-fired boilers may emit particulate too large for analysis by impaction methods. The material may be sized by a screen analysis, but this requires a very large sample. Such a sample may be obtained by operating a high-volume sampler over a long time period.

The usual method for particle sizing of material collected in a high-volume sampler is to scrape some of the material off the filter and place it on a microscope slide. If the loading is very light, the particles may be sized by cutting a representative sample from the filter and placing it on a microscope slide, dirty side up. The filter is then cleared by a drop or two of immersion oil and the particles sized directly. In either case, a minimum of 100 particles should be sized under a microscope. Sizes may be reported

in terms of the percentage of particles smaller than a given size. Because the particles sizes usually follow a log normal distribution, a mean size and geometric deviation describe the sample. The mass mean may be computed from the size mean by the formula:

$$\ln M'g = \ln Mg + 3 (\ln \sigma)^2$$

where:

$M'g$ = Mass Mean

Mg = Size Mean

σ = Geometric Deviation

Table 21 shows particle sizes from several tests of wood-fired boiler with high-volume samplers.

Table 21. PARTICLE SIZES FROM HIGH-VOLUME TESTS OF WOOD-FIRED BOILERS[17,18]

Boiler tested (code letter)	Size mean, microns	Geometric deviation	Mass mean, microns
G[a]	1.9	1.71	4.5
H	3.6	2.03	16.2
I	4.5	1.73	11.1
J	5.0	1.88	16.5
K[a]	2.1	1.75	5.4
L	5.3	1.62	10.6
L	23.4	2.01	100.8
M	6.5	1.66	14.1
M	26.4	2.10	137.5
N	6.8	1.71	17.3
N	13.7	1.69	31.3
S[a]	6.8	1.59	13.0

[a] Boiler with centrifugal primary collector.

Examination of Table 21 indicates that a large percentage of the particulate emitted from some wood-fired boilers is in the respirable size range (less than 10 microns), whereas emissions from others are so large that they constitute only a nusiance problem.

Particulate-Combustible/Ash Analysis

If a boiler is operating at maximum efficiency, it will consume all the combustible material and emit only inorganics as fly ash. An inefficient boiler will emit large quantities of unburned organic material and carbon. By collecting the particulate matter on a glass fiber filter and ashing the filter in a muffle furnace, the analyst can calculate the percentages of organic and inorganic materials in the fly ash. The high-volume filter is particularly useful for such analyses because it can collect a large mass of sample. Table 22 shows the analysis of several particulate samples.

The effect of boiler loading is indicated in Table 23. The boiler tested was a new spreader stoker with capacity of 45,000 pounds of steam per hour, equipped with a centrifugal primary collector but with no reinjection system. At the higher loadings the wood particles were not consumed completely and the unburned components came through with the particulate fly ash. This boiler was required to meet a

Table 22. ASH ANALYSIS OF PARTICULATE FROM SEVERAL WOOD-FIRED BOILERS[17,18]

Boiler tested (code letter)	Particulate ash, %
L	98
L	94
M	76
M	56
N	87
N	64
K	55
O	15
P	24
Q	37
R	24

Table 23. PARTICULATE EMISSION ANALYSIS AND CALCULATED ASH VALUES (BOILER 5)

Boiler load, % of rating	Particulate emissions, grain/scf at 12% CO_2	Particulate ash, %	Calculated uncombustible emissions, grain/scf at 12% CO_2
35	0.118	59.5	0.070
55	0.178	50.7	0.090
100	0.232	29.5	0.068

standard of 0.10 grain per scf at 12 percent CO_2 but emissions exceeded this level during the tests. If combustion had been complete within the furnace, emissions would have met the standard at all boiler loads. It is apparent that emissions can be excessive when combustion is not complete.

Opacity

Opacity of plumes can be measured by observations of a certified observer or by an opacity-monitoring instrument mounted in the stack. Values obtained in these two types of measurements may differ because of such variables as humidity, chemical reactions, plume geometry, background conditions, and winds.

Cristello[20] has reported opacity values measured by a trained observer and by an optical transmissometer. The measurements were made on three different days under varying conditions. The results, shown in Table 24, indicate considerable differences between the visual and the instrumental readings. The coefficient of determination (r^2) for the data is 0.498, which indicates relatively poor correlation. Data such as these are sometimes cited to show that instrument readings may not be substituted for readings by a certified observer in determining compliance with opacity regulations. Interestingly, Cristello reports fairly high correlations between instrumental opacity readings and

particulate emissions determined by EPA Method 5, as discussed in the following section.

Table 24. COMPARISON OF VISUAL OPACITY WITH OPTICAL TRANSMISSOMETER FOR A WOOD-FIRED BOILER[20]

Sample date	Visual opacity, %	Transmissometer opacity, %
5-22-74	30	30
	20	20
	40	35
5-30-74	0	51
	15	57
	20	66
	80	75
7-4-74	0	20
	100	99

Comparison of Measured Emissions

Comparative testing of particulate emissions by different methods is done for several reasons. A large company may operate boilers in several states and wish to standardize on one test procedure. If they can demonstrate good correlation with the standard method used in a particular state, they may be allowed to use their method as an alternative or equivalent procedure. Also, correlations can provide valuable guidance for boiler operation, since high opacity reading may be expected if particulate emissions are high.

Comparison of EPA Method 5 and High Volume Method

Morford[18] reports on an extensive series of tests in which an EPA Method 5 sampling train and an automatic high-volume sampler were operated in parallel on several wood-fired boilers. Results are shown in Table 25. The values are averages of two runs for Method 5 and Modified Method 5, and four to eight runs for the high-volume method. The Modified Method 5 values represent front-half catch only.

Table 25. COMPARISON OF EPA METHOD 5 AND HIGH-VOLUME PARTICULATE SAMPLING VALUES

Boiler code	Date	Mean grain loadings[a]		
		High-volume	Method 5	Modified Method 5
A	6 May 75	0.204	0.152	0.138
B	4 Mar 75	0.223	0.301	0.263
B	22 Apr 75	0.265	0.240	0.186
C	11 Mar 75	0.240	0.245	0.234
D	18 Mar 75	0.106	0.118	0.116
E	20 May 75	0.113	0.094	0.086
F	27 May 75	0.246	0.265	0.254

[a] Grains per standard dry cubic foot (gr/dscf) adjusted to 12 percent CO_2.

Statistical analysis of the data in Table 25 showed no significant differences ($\alpha = 0.05$) in the particulate loadings measured by the three methods. The standard deviation

and standard error for the high-volume method were lower than those for the EPA Method 5 and Modified Method 5.

This series of tests indicates that the high-volume method could be considered as an acceptable alternative to either EPA Method 5 or the Modified Method 5 in particulate emission testing of wood-fired boilers.

Comparison of EPA Method 5 and Opacity

Cristello[20] reports comparative testing of two wood-fired boilers. Particulate was measured with the EPA Method 5 sampling train at the same time a Lear-Siegler model RM-4 optical transmissometer was recording opacity of the plume. Only front-half catch by the Method 5 train was reported.

The first test series was on a boiler rated at 300,000 pounds of steam per hour at 600 psi. A multiple cyclone collector was the only control device. In a series of 21 tests, the coefficient of determination (r^2) was 0.89. The linear regression equation was:

$$\% \text{ Opacity} = 0.014 + 1.29 \text{ (front-half particulate, grains per scf)}$$

The equation was developed from particulate values ranging from 0.06 to 0.29 grains per dry scf.

The second test series was run on a common stack from two Dutch oven boilers burning hogged fuel. The particulate control device was an annular ring incorporating water spray showers, the unit functioning as a wetted cyclone. In a

series of eight tests the coefficient of determination (r^2) for opacity versus the front-half particulate catch was 0.97. The linear regression equation was:

$$\% \text{ Opacity} = 0.105 + 2.05 \text{ (front-half particulate, grains per scf)}$$

The equation was developed from particulate values ranging from 0.01 to 0.20 grains per dry scf.

The two regression equations developed from tests of the two boilers differ significantly, an indication that although comparisons of particulate emissions and opacity may be reliable for individual boilers, such comparisons should not be applied to more than one boiler. Each boiler must be tested to determine the correlation and regression equation, which can be useful for predicting emissions.

6.0 CONTROL TECHNOLOGY

The calculations presented earlier show that a wood-fired boiler is unlikely to comply with a particulate emission standard of 0.2 grain per dry scf corrected to 12 percent CO_2 without some type of control device between the boiler and the stack. If the emission standard is 0.1 grain per dry scf, at least one control device is needed, and most boilers required to comply with that standard over their entire operating range must use two separate control devices in series.

Operation of a boiler system in compliance with emission regulations is a function not only of the control devices but also of the operator's training and skills, the system instrumentation, the plant's maintenance and operating procedures, and the applicable regulations. These factors, discussed earlier, are now considered as part of the total technology for control of particulate emissions from wood-fired boiler.

CONTROL DEVICES

The effectiveness of pollution control devices depends to a large extent on the characteristics of the particles

they are intended to capture. Consideration of these characteristics is an important aspect of control technology.

1. Size - The size of fly ash particles from a boiler may range from less than 1 micron to more than 100 microns. In determination of particle size, many particles are measured and the results are averaged. Particle size may be expressed as an average or mean size, or, as weight fractions with assumed shape and density.

2. Density - Density of the particles affects the collection efficiency of a pollution control device. Low-density particles are more difficult to collect by inertial collection devices than high-density ones.

3. Settling velocity - Settling velocity is the maximum speed that a particle can attain when it is falling through quiet air. Particles that settle at rates less than 1 centimeter per second are considered to be aerosols.

4. Resistivity - Resistivity of particles is related to their ability to carry electron charges and is of concern only with respect to electrostatic precipitators. Some particles can accept electron charges, others cannot. The ability of fly ash from hogged fuel to accept electron charges is limited because of its resistivity.

5. Adhesiveness - Some particles are naturally sticky, adhering to themselves and to other surfaces under proper conditions of temperature and moisture. Such particles may be easy to separate from an airstream but difficult to remove from the control device. Most emissions from hogged fuel boilers present no such problem.

6. Particle strength - A major difficulty with fixed carbon particles is that they break easily into smaller particles. Mechanical processes that involve rubbing, abrasion, vibration, or crushing can greatly reduce the size of carbon particles. This is of major concern in control of systems for collecting and handling carbon.

Inertial Collectors

The most common particulate control device in use is the cyclone separator, which separates particles from exhaust gases. As shown in Figure 28, the particle-laden gas enters the top of the cyclone through a tangential inlet (or inlet guide vanes) that spins the gas stream in a helical path down the inside. The particles in the gas stream are forced to deviate from a straight pathway as they rotate about the cyclone axis. Their resistance to change in direction causes the particles to migrate toward the cyclone walls. As they reach the walls, gravity and the downward motion of the gas stream carry them to the bottom. The gas stream changes direction as it approaches the bottom and rises toward the discharge in a return vortex.

From among many factors that affect cyclone efficiency, six important ones are discussed here.

1. Diameter of cyclone. As cyclone diameter increases, particles must travel farther through the air stream to reach the wall. Therefore, increasing the diameter reduces collection efficiency.

2. Length of cyclone. As cyclone length increases, the residence time of the gas also increases, allowing more time for the particles to move through the gas to the wall. Thus, increasing the length of the cyclone increases efficiency.

3. Particle disengaging zone. When particles reach the bottom of the cyclone, they drop out under the force of gravity. If a bin collection chamber is at the bottom, the return vortex may dip into the bin and reentrain particles in the exit gas stream.

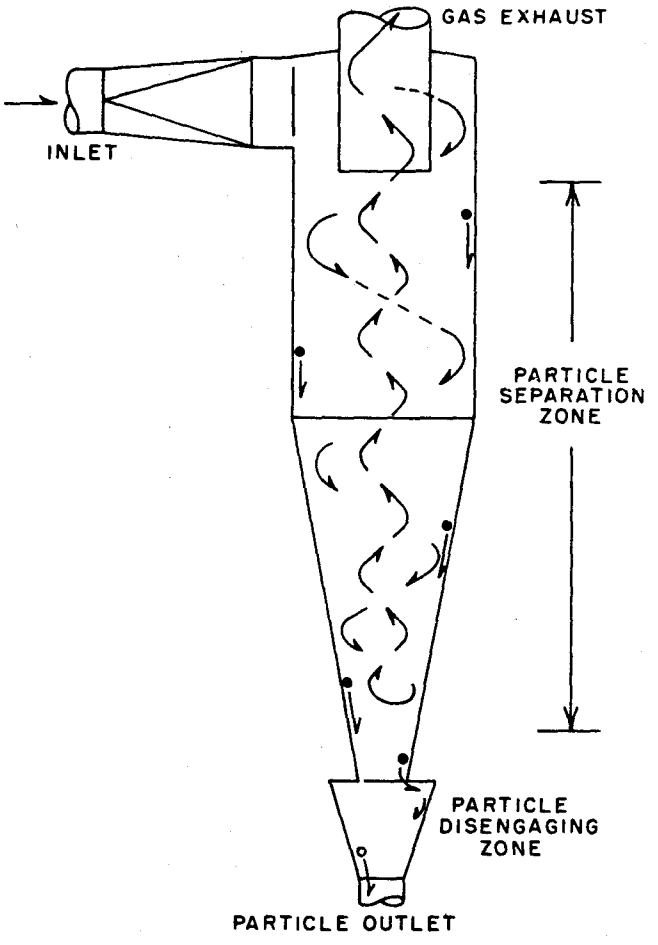

Figure 28. Cyclone collector for particles in flue gases.

To prevent this occurrence, some cyclones are equipped with disengaging zones at the outlet. As particles reach the bottom of the first cone, they drop into a second one, where their helical path sends them to the periphery, away from the return vortex. This design reduces the chance of reentrainment and increases cyclone efficiency.

4. Flow rates of the gas stream. Cyclones are designed to operate within a range of gas flow rates. If flow rates are too low, the centrifugal force is not great enough to separate the particles from the carrier gas. If flow rates are too high, then energy is wasted in pressure drop across the unit and the return vortex configuration may be disrupted. Operators should follow the manufacturer's design criteria for the specified range of flow rates.

5. Push- or pull-through systems. Cyclones can be operated either as push-through systems or under vacuum as pull-through systems. Although there is little theoretical difference in efficiency, the push-through systems must include vacuum seals on the bottom of the cyclone where the particles are discharged. Any leakage of these seals will admit air that can reentrain particles. Even though they are generally less efficient, the pull-through systems normally are used on hogged fuel boilers because push-through systems subject the induced-draft fan to extensive abrasion from particles in the flue gas.

6. Particle characteristics. As noted earlier, the size and density of particles control their settling velocity. Small particles with low settling velocities may not be able to reach the cyclone walls in the brief time that the gas is in the cyclone. Figure 29 illustrates a typical curve of cyclone efficiency for various particle sizes. Note that for a typical cyclone the probability of capture of particles whose diameters exceed 40 microns is 99 percent, whereas for particles with diameters below 10 microns it is only 64 percent.

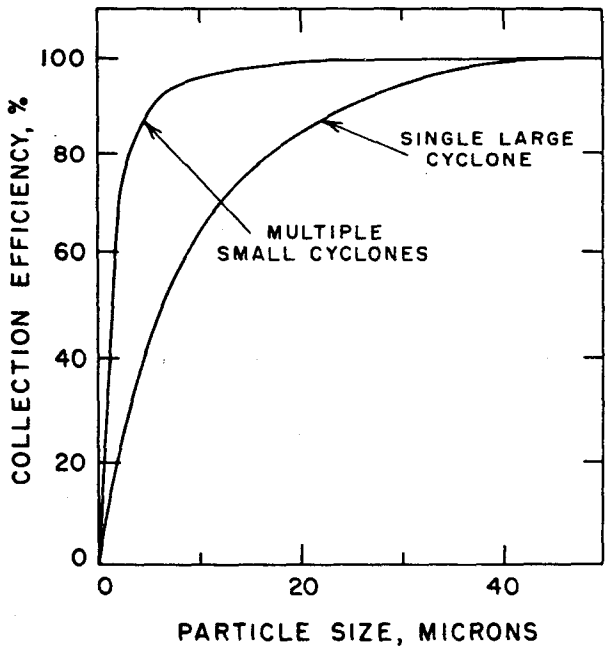

Figure 29. Relation of particle size to collection efficiency of cyclones.

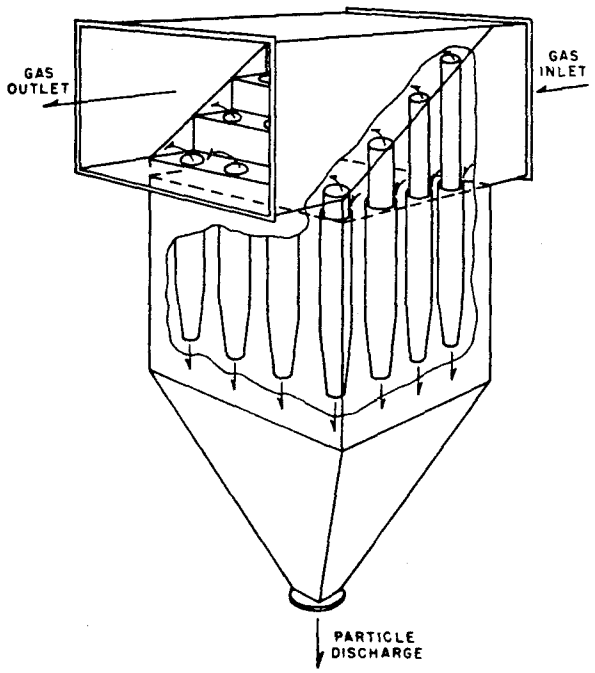

Figure 29a. Simplified diagram of a multiple cyclone.

In multiple cyclone systems the cyclones are ducted in a parallel-flow arrangement. Usually the term is applied to systems that contain 50 to 250 small-diameter cyclones, enclosed in a single box. A typical multiple-cyclone installation is pictured in Figure 29a. The inlet gas stream is ducted to a manifold cyclone inlet. The gas stream entering the top of any individual cyclone is directed through inlet guide vanes into a heical path providing the centrifugal force for separation of the particles. As with conventional large cyclones, the gas stream moves downward and then reverses direction and exits the cyclone in a return vortex. Particles that are removed from the gas stream drop into a hopper or bin.

Because the diameter of each of the multiple cyclones is much smaller than that of a large cyclone, the efficiency of particle collection is greater, particularly with small particles. Figure 29 illustrates typical collection-efficiency curves for multiple cyclones and standard large cyclones.

Most multiple-cyclone installations on hogged fuel boilers are installed upstream from the induced-draft fan to eliminate erosion by particle-laden air entering the fan. Because such an installation requires operation under vacuum, any leakage in the bin or collection hopper will cause

reentrainment of particles and will reduce collection efficiency. Leakage into a collection hopper also increases the danger of fires in the hopper. The gas stream in multiple cyclones is usually oxygen deficient because it comes from a combustion process. The hot bits of unburned carbon usually will burn rapidly if subjected to a stream of fresh air. Attention should be given also to sealing of inspection ports.

The rate of removal of material from the hopper must equal the rate of input to prevent plugging of the hopper and eventually of the individual cyclones. Inspection ports or other means of monitoring are usually provided.

A great disadvantage of multiple cyclone systems is that they are encased in a metal box that prevents regular, visual inspection of each of the cyclones inside. Because the material removed from the exhaust gases contains small amounts of ash and sand, abrasive damage to individual cyclones is common. A cyclone can be completely eroded before the operators are aware of its condition. A regular, visual inspection of each cylone is recommended. Such inspections are difficult to schedule when the boiler must be kept in service continuously.

Uneven distribution of gas to multiple cyclones can decrease their efficiency. Substantial variations in inlet

pressures within the box will cause improper flow of the flue gases, a portion of which may flow into the hopper and back up through some of the cyclone outlets, causing substantial reentrainment.

The literature contains many theoretical discussions of fractional size collection by centrifugal collectors. In operation on wood-fired boilers the inlet and outlet size distributions apparently do not differ greatly until the particle size exceeds 5 microns. Then the collector tends to selectively collect the larger particles. Table 26 gives data from a test of an experimental centrifugal collector on a boiler rated at 140,000 pounds of stream per hour. Note that both the outlet grain loading and the outlet mean particulate size remained fairly constant over the range of steam loads tested.

Table 26. EFFICIENCY TESTS OF A CENTRIFUGAL COLLECTOR

Steam load, lb/hr	Location	Particulate emission, grains/scf	Particulate emission, Mean size, μ
80,000	Inlet	0.099	3.87
	Outlet	0.080	3.38
100,000	Inlet	0.170	6.30
	Outlet	0.091	3.51
130,000	Inlet	0.213	6.01
	Outlet	0.102	3.32

Wet Scrubbers

One approach to particle control is to trap small particles on the surface of large particles, such as liquid droplets, and then collect the large particles. Devices based on this principle are called scrubbers or wet scrubbers, since most use a liquid to capture the particles.

The designer of a scrubber seeks to optimize three parameters: surface area of the liquid, contact between particles and liquid, and collection of the liquid.

Surface area of the liquid can be maximized by use of spray showers (Figure 30), venturi throat (Figure 31), water curtains, foam materials, and other techniques for converting the liquid into small droplets. (When one gallon of water is sprayed into droplets the size of a period, the surface area increases to about 300 square feet.)

Contact of the particles and the surface of the liquid is an integral feature of scrubber design. In venturi scrubbers, the area just downstream from the throat of the nozzle is extremely turbulent, increasing the probability of contact. In spray-nozzle systems, increasing the pressure drop across the nozzle increases the velocity of the droplets formed by the nozzle and promotes their impact upon the particles in the gas stream. Some scrubbers incorporate mechanical fans to aid in bringing the liquid into contact with the particles.

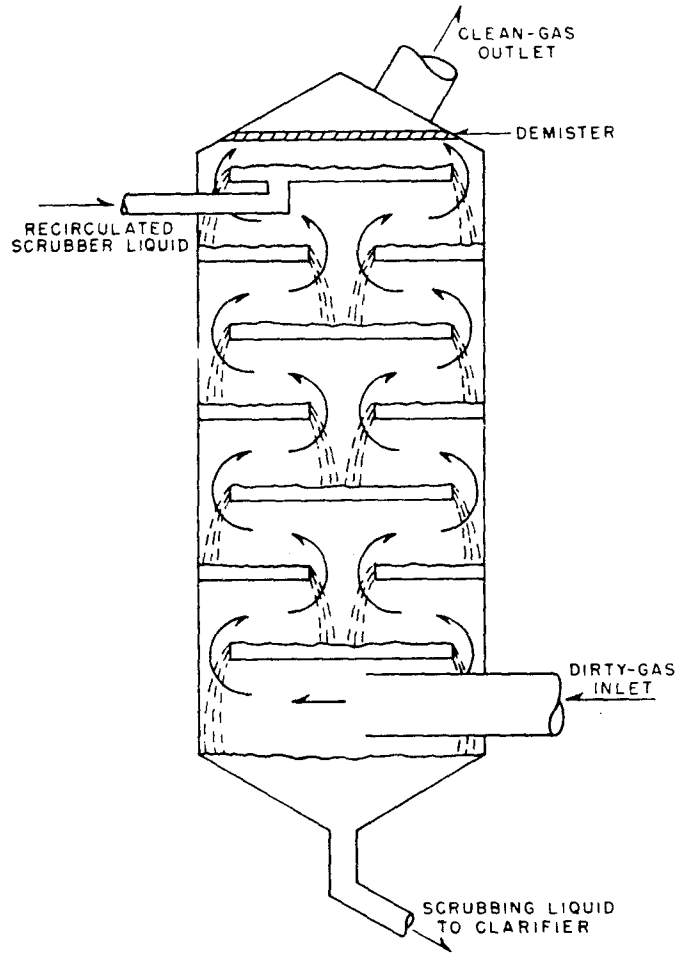

Figure 30. A cascading shower scrubber for increasing the efficiency of removing small particles from gases.

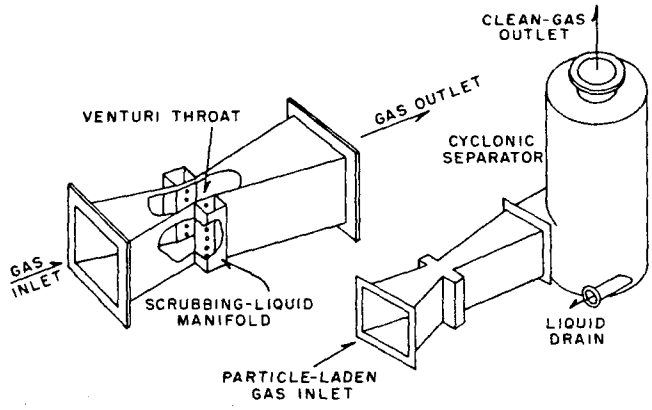

Figure 31. A venturi scrubber system in which turbulence downstream from throat increases the contact of particles and liquid droplets.

Collecting the liquid is relatively easy because of the size of the liquid droplets. A properly designed cyclone system works well in conjunction with venturi scrubbers and spray-shower systems. An enclosed liquid-curtain will keep all of the liquid in the stream except for the portion that may go off as a vapor in the exit gas stream.

The liquid used in wet scrubbers is usually water. When the systems are applied to hogged fuel boilers, the liquid becomes basic, with a pH in the range of 7.5 to 10. The scrubbing liquid evaporates because of the heat provided by the incoming flue gas. This often results in a visible plume of water vapor.

The efficiency of collecting small particles generally increases with increasing energy input to the system. The energy input may be in the form of pressure drop across liquid spray nozzles, venturi sections, collection cyclones, or other devices.

Collection efficiencies for wet scrubbers extend over a wide range. A system designed for use on boilers fired with hogged fuel, usually operates with overall collection efficiency ranging from 95 to 98 percent by weight. Collection efficiencies are higher for large particles and lower for small particles.

An advantage of wet scrubbers is that they are not subject to fire damage. If hot sparks carry over to a wet scrubber, the liguid quenches the fire quickly. The obvious disadvantage of such systems is that they generate water pollution. Particles trapped in the scrubbing liquid must be removed and the liquid recirculated. The solid particles settle out of the water in a reasonably brief time (about 30 minutes). Thus, a clarifier works well to settle the particulate. Construction is costly, however, and disposal of the solids from the clarifier is an associated problem. For example, a hogged fuel boiler with a capacity of 100,000 pounds per hour may generate 8 to 10 tons per day of solids in the exhaust gas stream. If this material is collected in a wet scrubber, the solids from the clarifier will be in the form of a slurry that is difficult to handle and dispose of. It is extremely important in designing a wet scrubbing system to make adequate provision for collection and disposal of the solids.

Corrosion and erosion are potential problems in wet scrubber systems. Corrosion problems with wet scrubbing equipment are discussed in detail in Reference 21.

Erosion can be severe in scrubbers and in sludge handling and removal systems if the particulate ash is abrasive. For one wet scrubber system, the maintenance-replacement

schedule for the sludge handling system is about 1 year. Severe erosion can increase operating costs and reduce scrubber efficiency.

Farrell and Rippee, reporting on a low-energy wet scrubbing system installed on a 180,000-pound-per-hour boiler,[22] state that typical outlet emissions run from 0.04 to 0.08 grain per standard cubic foot, with a pressure drop of only 1/2 to 1 1/2 inches of water. Table 27 summarizes the boiler emissions.

Mick[22] recently reported the problems of Georgia-Pacific in operating wet scrubbers on wood-fired boilers. He states that though the plant can meet emission standards the operational problems may dictate another control system.

Dry Scrubbers

The dry scrubber, a recently developed system, shows promise in overcoming some of the undesirable features of the wet scrubber. The dry scrubber utilizes a moving bed of granular material (called media) as the entrapment material rather than water droplets. The dirty media is shaken at the bottom of the unit and the particulate matter falls to a storage bin. The clean media is removed to a conveyor, which returns it to the top of the unit. The unit provides the following advantages:

Table 27. EMISSIONS FROM BOILER EQUIPPED WITH LOW ENERGY SCRUBBER[22]

Date	Stack	Gas			Particulate matter			
		Flow, ft^3/min	Moisture, %	Temperature, F	Loading, gr/scf	Loss, lb/day	Standard, lb/day	Inorganic, %[a]
1971[b]	1	121,000	17.1	404	0.51	6,730	1,780	54.2
1972[b]	1	111,000	19.4	413	1.44	15,660	1,896	57.6
1/15/73	North	55,200	16.4	180	0.068	526	1,700	55.6
1/15/73	South	58,900	19.7	182	0.068	535		57.3
1/25/73	North	55,200	17.4	178	0.071	545	1,790	49.0
1/25/73	South	47,800	19.5	183	0.068	437		48.6
2/6/73	North	59,400	22.5	174	0.054	419	1,945	57.5
2/6/73	South	47,100	22.7	179	0.068	418		63.9
3/19/73	North	46,400	23.5	187	0.054	316	2,070	55.9
3/19/73	South	56,800	27.2	179	0.059	408		58.2
3/20/73	North	43,400	24.3	157	0.042	237	2,070	54.6
3/20/73	South	44,600	22.2	162	0.041	243		56.3
6/5/73	North	54,300	22.6	178	0.077	547	1,890	60.3
6/5/73	South	55,200	20.9	185	0.065	473		61.6

[a] Inorganic percentage of total particulate matter.

[b] Tests in 1971 and 1972 were before scrubber installation with only one stack.

1. No water supply is required.

2. No water is discharged, since the particulate is removed as a dry material.

3. No corrosion occurs; the unit can be made of mild steel.

4. The scrubber is small. High velocity through the filter media permits small dimensions and light weight.

Dry scrubbers are being installed in several locations, and on some of the largest wood-fired boilers ever constructed (500,000 pounds of steam per hour). If they prove as efficient and trouble-free as preliminary data indicate, dry scrubbing may be the best available technology.

Extensive test data are available from various boilers with dry scrubbers. Table 28 reports data for a hogged fuel power boiler, and Table 29 reports similar data for a power boiler burning hogged fuel with salt content. Table 30 gives results of a dry scrubber test on a combination bark/coal-fired boiler; Table 31 gives results of a dry scrubber test on a combination bark/oil-fired boiler.

Electrostatic Precipitators

Although electrostatic precipitators are used widely to control particle emissions from combustion sources, they are rarely used on boilers fired with hogged fuel.

Among the many factors affecting collection efficiency in these units, an important one is resistivity of the

Table 28. EFFICIENCY OF DRY SCRUBBER ON HOGGED FUEL BOILER

Date	Media size, in.	Media gas velocity, ft/min	Media pressure drop, in. H_2O	Cyclone pressure drop, in. H_2O	Total loading, gr/dscf at 12% CO_2			Collection effieicncy, %		
					Cyclone in	Media in	Media out	Cyclone	Media	Total
1/6/75	1/4 x 1/8	125	6	1.2	2.768	0.875	0.075	68.4	91.4	97.3
1/7/75	1/4 x 1/8	170	9.3	2.0	1.486	0.609	0.080	59	86.9	94.6
1/8/75	6 - 8	150	11.8	1.4	2.542	0.800	0.070	68.5	91.3	97.3
1/8/75	6 - 8	125	9.7	1.0	4.719	0.618	0.026	86.9	95.7	99.4

Table 29. EFFICIENCY OF DRY SCRUBBER ON BOILER BURNING HOGGED FUEL WITH HIGH SALT CONTENT

Date	Media gas velocity, ft/min	Media pressure drop, in. H_2O	Cyclone pressure drop, in. H_2O	Total loading, gr/dscf at 12% CO_2			Collection efficiency, %			NaCl in dust to media, %	Collection efficiency (NaCl from media), %
				Cyclone in	Media in	Media out	Cyclone	Media	Total		
4/10	112	9.5	0.5	0.781	0.431	0.059	44.8	86.3	92.5	62.3	83.3
4/10	114	14.7	0.5	0.837	0.559	0.070	33.3	87.5	91.6	63.8	86.1
4/14	71	9.6	0.3	1.089	0.381	0.065	65.0	82.9	94.1	48.9	85.5
4/19	91	9.7	0.4	1.398	0.403	0.064	71.2	84.2	95.5	60.0	79.9
4/19	75	15.0	0.2	0.773	0.182	0.024	76.5	86.8	96.9	44.4	85.6
4/21	89	12.2	0.3	1.264	0.488	0.071	6.14	85.4	94.4	47.6	87.4
4/24	74	10.0	0.3	1.016	0.297	0.028	70.8	90.5	97.3	29.8	89.0

Table 30. EFFICIENCY OF DRY SCRUBBER ON BOILER BURNING BARK/COAL FUEL

Date	Pressure drop, in. H_2O	Velocity, ft/min	Fuel input			Particulate concentration, gr/acf		Scrubber efficiency, %	Particulate emissions, lb/MM Btu	
			Bark, tons/hr	Coal, M lb/hr	Total, MM Btu/hr	inlet	outlet		Actual	Allowed
7/16/75	3.0	100	8.5	16.3	289	0.073	0.005	92.5	0.035	0.304
7/17/75	3.2	100	18.0	19.1	411	0.150	0.007	95.6	0.048	0.304
7/17/75	4.5	125	18.0	18.5	403	0.197	0.009	95.7	0.062	0.304
7/18/75	6.6	150	17.5	15.4	358	0.193	0.017	91.0	0.118	0.304
7/18/75	5.5	125	17.8	16.1	370	0.191	0.010	94.6	0.069	0.304
7/18/75	4.8	100	17.8	15.1	357	0.084	0.006	92.7	0.041	0.304
7/21/75	6.1	100	18.7	14.6	358	0.050	0.006	89.2	0.041	0.304
7/21/75	8.5	125	18.7	15.2	366	0.185	0.007	96.1	0.048	0.304

Table 31. EFFICIENCY OF DRY SCRUBBER ON BOILER BURNING BARK/OIL FUEL

Media	Pressure drop, in. H_2O	Velocity, ft/min	Fuel input			Particulate concentration, gr/acf		Scrubber efficiency, %	Particulate emissions, lb/MM Btu	
			Bark, tons/hr	Oil, M lb/hr	Total, MM Btu/hr	inlet	outlet		Actual	Allowed
6-8	9.0	100	35	17.18	614	0.1125	0.0108	90.4	0.075	0.305
6-8	11.3	125	45	14.97	658	0.1532	0.0248	83.8	0.162	0.300
6-8	14.1	150	35	18.09	630	0.1367	0.0330	75.9	0.224	0.303
6-8	11.4	125	45	13.81	637	0.2099	0.0256	87.8	0.172	0.302
1/4x1/8	2.8	100	28	20.09	608	0.1021	0.0297	70.9	0.209	0.305
1/4x1/8	2.9	100	35	15.32	579	0.1329	0.0141	89.4	0.104	0.308
1/4x1/8	4.2	125	45	13.83	636	0.1642	0.0284	82.7	0.191	0.302
1/4x1/8	1.8	75	46	12.67	624	0.2357	0.0446	81.1	0.306	0.304
1/4x1/8	2.9	100	43	11.65	580	0.1731	0.0388	77.6	0.287	0.308

particles. Particles with low electrical resistivity, such as that of carbon, give up the negative charge to the positive plate and assume a positive charge. Since like charges are repelled, the carbon particles are pushed away from the plate and are reentrained in the gas stream. Particles having high electrical resistivity are unable to give up their negative eletric charge. As these particles build up on the collecting plate, they can form an insulating barrier and even set up a net negative charge. In either case, with excessively low or high resistivity, precipitator efficiency is reduced.

Fly ash and unburned carbon from boilers fired with hogged fuel have low electrical resistivity. The efficiency of electrostatic precipitators can be increased if the particles are conditioned by injection of a material that alters resistivity to a more appropriate operating range. Sulfuric acid mist is sometimes used in some instances to accomplish this, but can in turn cause corrosion and increase the potential for environmental pollution.

Another way of overcoming the low resistivity of particulate from wood-fired boilers is to operate the precipitator at high current levels. In practice, because of the great variability of the particulate leaving the wood-fired boiler, the precipitator must be capable of operating at high current levels even though it may be operated at normal levels most of the time.

Betchley reported in 1973[23] that only two power boilers at paper mills were equipped with electrostatic precipitators for particulate control. Both used multiple cyclone primary collectors and both were fired with coal and bark. The clue to successful operation of these units was probably the use of coal as primary fuel. The precipitator was designed to accommodate the coal, which is a more consistent fuel than wood residue. The sulfur in the coal also aided the operation of the precipitator. It is important to note that coal was the primary fuel and that less than 50 percent of the heat input was from wood.

Table 32 lists all combination-fuel-fired power boilers at paper plants in the United States.[24] The four boilers fired by coal-oil-bark/wood use coal in proportions of 66, 80, 76, and 75 percent. The corresponding wood energy inputs to these systems are 16, 7, 23, and 25 percent, respectively. The table also indicates that emissions from the power boilers fired with wood residue and coal are relatively high (0.17 to 1.2 grains per dry scf); so equipped, these boilers would have difficulty meeting most emission standards in force today.

Electrostatic precipitators are large and are costly to install. The combustion of high capital cost and potential for low efficiency has resulted in their limited use for control of emissions from boilers fired with hogged fuel.

Table 32. EMISSION DATA FROM POWER BOILERS FIRED WITH BARK/WOOD PLUS OTHER FUELS[24]

Mill number	Boiler number	Collector rating		Percent of fuel supplied, Btu basis				B/W[a] t/day	Fly ash reinjection	Gas flow rate, 10^3 dscfm	Particulate concentration, gr/dscf		Collection efficiency, %	Emission rate, lb/hr
		Pressure drop, in. H_2O	Efficiency, %	B/W[a]	Oil	Gas	Coal				Inlet	Outlet		
031	7	2		75	25	0	0	200	Yes		9.90	0.81	92	402
048	4	2.8	90	51	59	0	0	384	Yes	83		0.14		100
072	1	2.5	88	68	32	0	0	450	Yes	55	0.59	0.12	80	57
096	1	2.5	92	16	18	0	66	30	Yes	51		1.1		480
	3	2.5	92	7	13	0	80	31	Yes	51		1.2		528
107	1	4.8	92	23	1	0	76	136	Yes	91		0.18		140
113	21	3	93	25	0	0	75	200	Yes	123		0.17		180
144	4	3	90	73	27	0	0	205	Yes			0.51		
	5	3	90	82	18	0	0	305	Yes			0.30		
183	7	2.5	92	44		46	0	26	Yes	76	2.3	0.16	93	104
185	3		80	35	65	0	0	65	Yes	56		0.43		209
191	3		93	98	2	0	0	165	Yes	57	0.90	0.32	64	156
217	4	3.6	82	64	36	0	0	250	Yes	48	2.11	0.44	79	183
	5	3.0	82	57	43	0	0	250	Yes	50	3.01	0.35	88	150
218	3	3	93	31	0	69	0	360	Yes	131		0.18		202
219	2		95	100	0	0	0	145	Yes	40		0.37		127
	3	3	95	37	63	0	0	215	Yes	50		0.10		43
253	1	2.5	90	28	38	34	0	370	Yes	153	1.7	0.13	92	171
260	11	3	84	39	18	43	0	765	Yes	187	1.83	0.30	84	482
	12	2.8	84	41	20	39	0	815	Yes	156	2.10	0.51	76	682
292	3	0.2	75	100	0	0	0	70	Yes	19	1.4	0.4	71	65
272	7-8		84	25	75	0	0	400	No	198		0.6		1020
026	BB	3	97	44	56	0	0	500	No	60		0.94		488
205	2	4	96	30	70	0	0	120	No	35.5		0.52		158
	3	0.6	96	30	70	0	0	120	No	58		0.93		463
284	4	2.1	89	40	60	0	0	750	No	172	4.3	0.4	90	588
Average				48.5	31	9.2	11.3			84	2.74	0.45	83	299
Total								7337						7177

[a] Bark and wood wastes.

Baghouses

Baghouse filters are not used extensively on boilers fired with hogged fuel, largely because of fire hazard. The baghouse is a container housing cylindrical bags made of cloth. The particle-laden airstream enters the bags from the bottom. As the gas passes through the bags, the particles are trapped on the inside surface. The trapped particles are removed by various methods, such as shaking, reversing the gas flow, and impinging a high-velocity jet of air at regular intervals. In each system the goal is to make the trapped particles fall from the bag into a collection hopper.

Baghouse filters are extremely efficient, even for fine (submicron) particles, with collection efficiencies commonly greater than 99 percent. They do not require a great deal of energy to operate. Pressure drops are normally less than 10 inches of water. Because they do not use liquid, there is no visible plume and no water cleanup problem.

The disadvantages, however, may outweigh these advantages. The bags are temperature-limited, with an upper limit of about 600°F for most commercially available materials. A small fire in the ash collection hopper or a glowing ember in the flue gas, could cause extensive damage to a baghouse. If the baghouse is located downstream from

an efficient multiple-cyclone collector, however, the combustible content of the captured material generally is too low to support combustion.

The potential for fire damage is the most critical disadvantage. Others must be considered, however. For example, baghouse life is limited by wear. The constant flexing or shaking action to remove collected particles reduces normal bag life to 18 to 24 months, leading to high maintenance costs. Further, baghouses are generally large structures, and many plants do not have adequate space for this type of installation. Baghouses must be fully insulated to prevent condensation inside the bags or on cool surfaces. This is particularly important where sulfur-bearing auxiliary fuels are burned. Finally, the initial capital cost of a baghouse installation is high relative to costs of alternative control systems.

One wood-fired boiler at Spokane, Washington, has been operating with Nomex bags with an air-to-cloth ratio of 4.1 acfm per square foot of fabric. Extensive tests were run on this boiler. The results have not yet been published but were obtained by private communication.

The boiler operated at a rate of approximately 30,000 lb/hr for all tests. Flue gas from the breaching of the boiler traveled through a baffled settling chamber 20 feet

high by 8 feet in diameter, then through an induced draft fan, and 120 feet of 33-inch diameter ducting (to cool the gas stream). It then passed through a cyclone with a settling chamber, and an expanded-metal type spark arrester, and finally to the baghouse, followed by a second induced-draft fan and a dampered stack.

The inlet samples were collected after the cyclone but ahead of the spark arrester. The outlet samples were collected from a port located in the duct between the baghouse exit and the last induced-draft fan. Table 33 gives the results of this test series. Note that the grain loadings were not corrected to 12 percent CO_2 because of an Orsat instrument problem. Test observers believe that the excess air during the test was within normal operating ranges.

Other Control Devices

Many devices and combination systems now under development show promise for control of emissions to varying degrees. One of these is the Becker Sand Filter, which is an adaption of a water filtration system. The dirty gas stream enters the top of the unit and passes downward through a wetted sand bed. Water is continually sprayed onto the sand from the top. The cleaned gas is separated from the water as it leaves the bottom of the sand bed. The key to successful operation of the system is that the sand is uniformly

Table 33. TESTS OF A HOGGED FUEL BOILER EQUIPPED WITH NOMEX FILTERS

Test no.	Date	Test location	Particulate concentration (105°)		Stack temp. °F	Moisture in fuel, %	Average velocity (wet basis), ft/sec	Gas flow, acfm	Gas flow, dscf
			gr/acf	gr/dscf					
1	1/7/75	Outlet	0.0041	0.0073	278	14.78	58.7	13,148	7,470
2	1/8/75	Outlet	0.0017	0.0030	293	14.85	57.1	12,792	7,118
3	1/8/75	Outlet	0.0022	0.0040	293	15.07	57.2	12,799	7,103
4	1/8/75	Inlet	0.6609	1.4354	410	18.59	59.2	21,097	9,713
5	1/9/77	Inlet	0.7910	1.6459	413	14.73	60.7	21,625	10,392
6	1/9/75	Inlet	0.6035	1.2289	413	12.86	60.7	21,625	10,620
7	1/9/75	Outlet	0.0035	0.0066	328	15.57	57.7	12,915	6,808

graded. The device is expensive to operate because of the pressure drop (12 to 15 inches of water). Problems with water supply and water clean-up are similar to those of a wet scrubber.

Systems incorporating moving bed filters, wetted electrostatic precipitators, precoated bags in baghouses, and several other concepts may see future use.

Combination Devices

A single control device seldom provides adequate control of a wood-fired boiler. When control is limited to a cyclone or multiple cyclone, emissions probably exceed regulations. If a cyclone or multiple cyclone is not used ahead of a baghouse or scrubber, the inlet loading may be so high that the device is overloaded. Failure of some dry scrubber systems to meet environmental regulations has recently been reported. Since these dry scrubbers were used without inertial precleaners, it is conceivable that the friable particulate matter entering the scrubber was being crushed in the scrubber and emitted as very fine particulate. Installation of multiple cyclones ahead of the dry scrubbers might cure the problem. Change of the scrubber medium may be another solution.

The generally accepted primary cleaner is the multiple cyclone. For stringent control the cyclone may be followed

with a wet scrubber, a dry scrubber, a baghouse, or an electrostatic precipitator (for combination coal burners).

Table 34 summarizes the information now available on control devices for wood-fired boilers. These data describe current installations. For any proposed installation on a wood-fired boiler, the costs and design data must be developed by a qualified engineer.

OPERATOR TRAINING

Proper boiler operation is often overlooked as a means of controlling particulate emissions, even though emissions from a boiler that is operated poorly can be 10 times as great as those from the same boiler when it is operated properly. The difference is in the knowledge, skill, and diligence of the person firing the boiler. In preparation for placing a boiler in operation, the engineer who designs the boiler and related systems must be licensed, the manufacturer and contractor must be bonded and required to guarantee their work, and the boiler inspector must be licensed. In practice, this boiler can then be turned over to a fireman or stationary engineer who has received no training at all or to one having years of theoretical and practical experience. A great deal is at stake: energy conservation, air pollution control, plant safety, and efficient, uninterrupted plant operation. The boiler operator, therefore, must be the best available.

Table 34. PROPERTIES OF PARTICULATE COLLECTORS ON WOOD-FIRED BOILERS[a]

Collector type	Cost[b] $/100 acfm	Power req'd. HP/1000 acfm	Pressure drop, in. H_2O	Temp. limit, °F	Expected performance		Disposal of collected particulate	Remarks
					Effic., %	Loading, gr/scf		
Single cyclone	50	0.7	1.0 to 2.0	1000	80	0.4	Dry: landfill or charcoal	Collected material light and hard to handle
Multiple cyclone	150	1.0	1.5 to 3.0	1000	90	0.2	Dry: landfill or charcoal	Collected material light and hard to handle
Wet scrubber	180	1.7	3.0 to 8.0	1000	95	0.1	Wet: landfill or settling pond	Slurry difficult to handle; 10 gpm of water needed; visible plume
Venturi scrubber	150	3.0	15 to 30	1000	95	0.1	Wet: landfill or settling pond	Erosion may be severe; other properties same as wet scrubber
Dry scrubber	150	1.5	5.0	1000	95	0.1	Dry: landfill or charcoal	Small, lightweight
Baghouse	200	1.7	3.0	500	99	0.005	Dry: landfill or charcoal	Ultraclean; fire hazard
Multiple cyclone plus scrubber	300	3.0	8.0	1000	99	0.05	Wet: landfill or settling pond	Dry material; water required
Multiple cyclone plus ESP	400	1.5	2.0	1000	99.5	0.01	Dry: landfill or charcoal	Very expensive; ultraclean
Multiple cyclone plus dry scrubber	300	2.5	7.0	1000	99	0.05	Dry: landfill or charcoal	Still small and lightweight
Multiple cyclone plus baghouse	350	2.7	5.0	500	99.5	0.001	Dry: landfill or charcoal	Expensive; ultraclean; fire hazard

[a] Boiler capacity approximately 100,000 lb steam per hour.

[b] Does not include ductwork or fans. For new installations add 50 percent; for retrofit installations add 75 percent.

Certification of boiler operators, based on both theoretical and practical examinations, would be desirable. State and local agencies could require such examinations and could establish a required level of experience for "journeymen," the only persons eligible to be in charge of a boiler facility. Many companies are currently doing this internally with both formal and on-the-job training.

Formal Courses

Formal training for boiler operators consists of lectures, visual aids, problems, examinations, and field trips. Junge has successfully developed such a course, which he has presented several times on the West Coast. His manual[8] is an excellent guide for the student. This course has been sponsored by local community colleges, by groups of lumber industries, and by individual firms.

On-the-Job Training

Training on the job is best done by an individual company or utility. Experienced operators can provide practical training for new employees in operation of boilers and other equipment, perhaps using written or oral tests in conjunction with the work experience. Junge's manual[8] would be a valuable aid in such a program. The employer can award certificates for this type of training, as is done upon completion of a formal course. Structured on-the-job train-

ing programs have been conducted successfully in other trades for years.

INSTRUMENTATION

Proper boiler operation requires adequate, accurate instrumentation. A boiler operator should not be expected to operate within the limits required by air quality standards without instrumentation to indicate how the boiler is operating. The principal types of instruments required are those that monitor combustion, emissions, and opacity.

Combustion Instrumentation

Combustion instrumentation, such as oxygen analyzers and temperature indicators, should be considered as important boiler components. The oxygen analyzer, for example, may signal a potential malfunction. A boiler operating with twice as much excess air as the optimum not only will undergo high gas velocity through the system but will suffer an additional penalty when the particulate emission is adjusted back to 12 percent CO_2 equivalent. The operator must be aware of the ways in which combustion and particulate emissions are affected by the situation the instruments are indicating. Some especially critical instruments, such as oxygen recorders, are often connected to an alarm that gives an audio or visual signal when prescribed operating limits are exceeded.

All persons concerned with boiler operation should know the procedure for calibration of oxygen or carbon dioxide on a dry gas basis, whereas the boiler instrumentation may report the same component as a percentage of the wet gas. For example, if the flue gas is composed of the following hypothetical percentages of gases:

Nitrogen	68
Carbon dioxide	10
Oxygen	7
Water	15
	100%

the analysis on a dry basis (as indicated by an Orsat instrument) would be:

Nitrogen	80.0
Carbon dioxide	11.8
Oxygen	8.2
	100.0%

The differences in these values are significant in terms of combustion and particulate emissions.

Emission Instrumentation

Emission instrumentation is designed to indicate whether boiler emissions are within the regulation limits or are exceeding them. At present, few control agencies will allow the substitution of emission instrument records for stack tests or visual opacity readings to determine compliance.

Opacity Instrumentation

Opacity monitors installed in breeching or stacks, after all control devices, give the operator a good indication of the amount of particulate emitted to the atmosphere. These monitors are particularly useful if their readings have been correlated with values determined in stack emission tests or visual opacity readings. These instruments range from indicating "smoke meters" costing approximately $1,000 to recording, self-calibrating opacity meters costing nearly $10,000.

Equipping the opacity meter with a visual or audible alarm will let the operator know when limits are being exceeded. Such an alarm immediately signals that a change must be made in the boiler operation to bring the emissions within the prescribed range.

Use of a recording opacity meter along with other recording combustion instruments (fuel flow, air flow, steam flow, temperature, draft, etc.) will provide a permanent record, which can be analyzed to determine the optimum firing conditions for various situations. Such a record also can aid the engineering supervisors in determining how well the boiler is being operated and what maintenance may be necessary.

TV Stack Monitors

Closed-circuit television systems have been installed in many plants for visual monitoring of stack emissions. The stack monitor provides a continuous display of plume visibility. Although this indicator is useful during daylight, it is of little value at night unless the plume from the stack is well lighted. The advantages of this system is that the operator can observe the stack emissions without leaving the boiler control panel. The main disadvantage is that the operator must constantly observe the monitor.

MAINTENANCE AND OPERATION

Controlling the combustion process requires a substantial amount of complicated equipment. The following systems are needed to achieve high efficiency of operation and low levels of pollutant emission:

- Equipment for fuel sizing, drying, mixing, storage, and feeding, with special provisions for firing sanderdust, cinders, and auxiliary fuel.
- A grate system with provisions for ash removal.
- An air system with forced-draft and induced-draft fans, dampers, damper positioners, and controls.
- An air-preheater system.
- Pollution control devices to remove particles from the flue gas.
- Monitoring equipment to provide information for control of excess air.

- A heat exchanger system, equipped with soot blowers to prevent ash buildup in the gas passage.

Without proper maintenance, the various parts of these essential systems soon will fail to perform their intended functions. Many maintenance needs are obvious. For example, it is readily apparent that sliding surfaces need regular lubrication; without it, they will eventually stop sliding or be severely damaged. Other maintenance needs are not so obvious. For boilers fired with hogged fuels, two are of particular concern: maintenance of the boiler control systems and maintenance to prevent leakage of air into the system.

Most boiler control systems have pneumatic controls that are operated with compressed air at low airflow rates. Problems arise because of contamination of the compressed air. Lubricating oil and condensed water collect in the air lines, plugging the lines and coating the controls with a gummy, sticky substance. As an indication of the magnitude of the problem, consider that a control system with air flowing at 1 cubic foot per minute through control lines, uses over 500,000 cubic feet of air a year. If the compressor is equipped with an aftercooler to remove 90 percent of the entrained water, 5 gallons of water may still condense in the lines each year. Mixed with cylinder lubricating oil, this water forms a coating that can make a control system inoperative in 1 to 2 years.

Two corrective measures are recommended. First is installation of a refrigerating and filtering system to remove the impurities. Second is regular cleaning and recalibration of the boiler controls by a competent instrument technician. Major cleaning and recalibrating should be done at least every 2 years. This service is available from reputable contractors if it is not readily available in-house.

Maintenance to prevent inleakage of air is critical in efficient operation. Any uncontrolled airflow into the process results in some loss of control of the process. Because most furnaces and emission control devices are operated under slightly negative pressures, any opening in the system causes air to enter. Typical openings causing inleakage are inspection ports, cracks in the furnace casing or setting, cleanout doors, openings around soot blowers, cracks in breaching and fan casings, and fuel chutes, which can allow passage of large airflows. These various uncontrolled sources of air should be sealed tightly.

An important part of maintenance of the furnace-boiler is prompt, scheduled removal of accumulated ash from the grates and ashpit. Data recently obtained on two similar Dutch oven boilers[18] indicate the emission problems created by excessive ash buildup within the firebox.

In boiler number 1 at the University of Oregon heating plant ash was allowed to accumulate for several days within the Dutch oven furnace, building to a depth of 2 or 3 feet on top of the grates. In contrast, boiler number 3, a similar furnace operating at the same steam load, was cleaned the day before an emission test and no ash buildup on the grates was apparent. The test showed that boiler number 1 was emitting 0.245 grain per scf corrected to 12 percent CO_2 while boiler number 3 was emitting 0.118 grain per scf. At an allowable emission limit of 0.20 grain per scf, the ash buildup caused enough additional particulate emission to prevent boiler number 1 from complying with the regulations.

Schedules

The problem of ash buildup can be controlled by setting a reasonable schedule for cleaning and then adhering to the schedule. A competent engineer can observe the operation over a sufficient period of time to determine an optimum schedule for raking of the ash. This schedule should be posted in the boiler house and operators should initial it after he performs each cleaning.

In a plant with multiple boilers, the scheduling can be done to minimize plant upset and spread the workload. For example, the following schedule could apply when four simi-

lar boilers are used for steam generation with three on the line and one kept cold but on standby:

ASH CLEANING SCHEDULE

With two odd-numbered boilers and one even-numbered boiler on the line - Clean odd-numbered boilers on odd-numbered days, lower number at 0300 and higher number at 0500. Clean even-numbered boiler on even-numbered days at 0400.

With one odd-numbered boiler and two even-numbered boilers on the line - Clean odd-numbered boiler on odd-numbered days at 0300. Clean even-numbered boilers on even-numbered days, the lower number at 0200 and the higher number at 0400.

With this schedule all boiler ash cleaning would be completed between 0200 and 0600, which is assumed to be the period of lightest load on the plant. It also staggers the cleaning to maintain at least two boilers on the line.

Soot blowing is another operation that must be scheduled. Soot can be blown in compliance with regulations if the excess opacity does not exceed a specified time period, such as 2 minutes in any one hour. Any soot blowing during daylight hours, however, especially on a sunny day, may elicit complaints even though it is done in compliance with the letter of the regulations.

Maintenance operations around the boiler plant can either be scheduled (routine) or unscheduled (upset). Any scheduled plant shutdown, such as for a week at Christmas, is the time to perform major boiler repairs or changes.

This of course would require scheduling with the affected plant personnel as well as suppliers and contractors.

Written Logs

The boiler operator should maintain a written log on which he notes and initials routine readings and separately indicates nonroutine or upset readings. This written log should be checked regularly by the engineer in charge or other responsible person. If an operator learns that no attention is given to his entries in the log, he may rapidly become lax in his record keeping.

Charts and Recordings

The filing and storage of all the charts and recordings from a modern boiler plant can rapidly become a problem if space is limited. Such records usually are only for internal use by operators and engineers concerned with the boiler. Normally, a 30-day storage period is probably adequate. Persons interested in the operation should be able to get information from the charts within this time period.

If an engineer wishes to conduct a long-term study, he should request that pertinent data from the charts of interest be recorded on data sheets for his use. The values indicated on charts and recordings must be converted to digital data, either manually or by data-logging systems,

before they can be of use in engineering or statistical studies.

REGULATORY ASPECTS OF WOOD-FIRED BOILER OPERATION

Control of emissions from wood-fired boilers requires a knowledge of the fuel, the boiler, the available control equipment, and the applicable regulations. As mentioned earlier, emission regulations can take many forms. Several state and regional regulations are based on a process weight chart or emission table, which specifies the maximum allowable emission in pounds of particulate per million Btu of heat input. The pounds of particulate emitted may be obtained in a stack test. Determining the heat input to the system may be more difficult, particularly if the wood is fired concurrently with oil, gas, or coal.

Even if wood is the only fuel fired, the estimation of heat input is difficult. Seldom is the wood fuel weighed as it is fired. Also, since the moisture content of wood is usually both high and variable, it is difficult to arrive at a reasonable value for gross heat input. The problems of estimating heat input and the recommended method of determination are described in a recent publication from the National Council of the Paper Industry for Air and Stream Improvement.[25] This report covers the matter so thoroughly that it is included in its entirety as Appendix C.

Current Regulations

The regulations governing particulate emissions from wood-fired boilers vary among states and regions. These regulations are summarized in Table 35.

Examination of the regulations and their wording indicates many points for concern and discussion. For example, assume the following for simplification:

1000 Btu input = 1 pound of steam
or
1 million Btu per hour = 1000 pound of steam per hour

1 pound of dry fuel produces 10,000 Btu

1 pound of dry fuel produces 87 dscf at 0 percent excess air

1 pound of dry fuel produces 122 dscf at 50 percent excess air

68 percent excess air corresponds to 12 percent CO_2.

Suppose a boiler is steaming at 60,000 pounds of steam per hour and the particulate emission is measured at 0.10 grain per dscf corrected to 12 percent CO_2:

$$60{,}000 \frac{\text{lb steam}}{\text{hr}} \times \frac{1{,}000 \text{ Btu input}}{\text{lb steam}} = 60 \text{ million Btu per hour}$$

$$60{,}000{,}000 \frac{\text{Btu}}{\text{hr}} \times \frac{\text{lb fuel}}{10{,}000 \text{ Btu}} = 6{,}000 \frac{\text{lb fuel}}{\text{hr}}$$

$$6{,}000 \frac{\text{lb fuel}}{\text{hr}} \times 122 \frac{\text{dscf}}{\text{lb fuel}} = 732{,}000 \frac{\text{dscf}}{\text{hr}}$$

$$\frac{0.10 \text{ grain}}{\text{dscf}} \times \frac{\text{lb}}{7{,}000 \text{ grains}} \times 732{,}000 \frac{\text{dscf}}{\text{hr}}$$

$$= 10.5 \frac{\text{lb part.}}{\text{hr}}$$

Table 35. SUMMARY OF REGULATIONS FOR WOOD-FIRED BOILERS[a]

State or county	Date of reg. or Rec'd.	Particulate emission regulation: gr/dscf at 12% CO_2		Opacity, %		Opacity-sec. exemption, sec/hr		lb/10^6 Btu		lb/ton process wt.		Old/new date	Other standards; notes
		Old	New	Old	New	Old	New	Old	New	Old	New		
Alabama 1	5/75							0.12-0.50[b]		0.093-11.2[b]		None	Class 1 county - 50% + urban
Alabama 2	5/75							0.12-0.80	0.12-0.50	0.138-11.0	0.093-11.2	Stated	Class 2 county - 50% + rural
Alaska	7/72	0.15[b,c]		20[b]		180/hr[b]						N.S.	Wood waste special reg.
Arizona	5/75							0.025-0.599[b]				N.S.	Based on higher heat value
Arkansas	7/73			20[b]		N.S.				0.093-14.4[b]		N.S.	100 lb/hr max allowable
Calif., Kern Co.	7/74	0.1[b,c]	Max 10 lb/hr							0.093-14.4[b]	(10 lb/hr max)	8/71	Valley basin
Calif., Kern Co.	7/74	0.1[b,c]	EPA std							1.333-8.24[b]	(40 lb/hr max)	8/71	Desert basin
Calif., La. Co.	1/72	0.3[b,c]	Max 10 lb/hr							1.33 -9.60	0.060-8.00	1/73	
Calif., Bay Area	5/70	0.15[b]								1.33 -11.02[b]	a	N.S.	0.020-0.100 gr/scf may be subst.
Connecticut	5/74							0.20	0.10			N.S.	Btu from mfg. maximum
Delaware	5/75							0.3[b]				N.S.	Btu from mfg. maximum
District of Columbia	3/74							0.02-0.13[b]					Btu determination N.S.
Florida, Dade Co.	5/75			40[b]		180/hr[b]				1.33 -9.60[b]			
Florida	4/75			30	30	120/hr	120/hr	0.3	0.2			7/74	Stds for 30x10^6 Btu/hr plus
Georgia	5/75				20		120/hr	0.24-0.7	0.1-0.5			1/72	
Hawaii	5/75									1.33 -11.02	1.33-11.2		All sources after 1/73
Idaho	5/75			40	20	180/hr	180/hr	0.12-0.6	0.12-0.6			N.S.	Btu from heat content
Illinois, Chicago	5/75							0.2	0.1				All sources new
Illinois, Other	5/75							0.1-1.0	0.1				After 6/75
Indiana	11/74							0.8	0.6			11/74	0.1 lb/10^6 Btu, Chicago and Indianapolis areas
Iowa	5/75							0.6-0.8	0.6			N.S.	
Kansas	1/72							0.12-0.60[b]				N.S.	Btu from mfg. maximum
Kentucky	5/75							0.11-0.80	0.10-0.56			4/72	Btu from heat input
Louisiana	5/75							0.6[b]				N.S.	
Maine	5/75								0.3-0.6				All sources new after 6/75
Maryland	5/75	(Area II)	0.03-0.05					0.12-0.60				1/72	99% efficiency dust coll. rqd.
Massachusetts	3/74							0.15	0.10			3/74	
Michigan	5/75	0.2[b]		20[b]		180/hr[b]						N.S.	0.5 lb particulate/1000 lb gas
Minnesota	5/75			20[b]		260/hr[b]		0.4-0.6[b]				N.S.	Fossil fuel regulations
Mississippi	5/75	0.30[b]		40[b]		900/hr[b]						N.S.	
Missouri	4/71							0.18-0.6	0.10-0.6			4/71	Btu from mfg. maximum
Mo., Springfield Green Co.	3/74	0.02-0.10[b,c]		40	20	360/hr	360/hr	0.12-0.6[b]				N.S.	
Montana	5/74							0.2-0.6	0.12-0.6			N.S.	Btu from heat input
Nebraska	6/75							0.15-0.6[b]				N.S.	Btu from heat input
Nevada	5/75							0.044-1.08[b]				N.S.	Btu from mfg. maximum
New Hampshire	3/74			40	20	360/hr	360/hr	0.19-0.60	0.12-0.60			2/72	Btu from heat input
New Jersey	1/74							0.1-0.6				N.S.	Btu from heat input
New Mexico	5/75			20[b]		180/hr[b]						N.S.	
New York	5/74							0.6	0.136-0.600			1/72	Heat input @ normal operat.
New York City	5/74							0.09-0.40[b]				N.S.	
North Carolina	1/71							0.15-0.70[b]				N.S.	8000 Btu dry pound
North Dakota	5/74							0.80	0.180-0.600			N.S.	Btu from heat input
Ohio	5/74							0.1-0.6[b]				N.S.	Btu from heat input
Oklahoma	6/70							0.6	0.10-0.60			6/70	Btu from capacity rating
Oregon	3/74	0.2[c]	0.1[c]	40	20							3/74	
Pa. Allegheny Co.	5/75							0.08-0.40[b]				N.S.	Btu from heat input
City of Philadelphia	5/75											5/69	(Old) 0.2 lb/10^3 lb gas, (New) 0.1 lb/10^3
South Carolina	5/75			40	20	300/hr	300/hr	0.6-0.8	0.02-0.6			2/71	Btu from capacity rating
South Dakota	5/75							0.30[b]				N.S.	Btu from mfg. maximum
Tennessee	5/75							0.1-0.6	0.1-0.6			7/75	Btu from heat input
Texas	5/75							0.1-0.3[b]				N.S.	Fossil fuel regulations
Utah	1/72												Minimum 85% control
Vermont	5/75							0.1-0.5[b]				N.S.	Btu from heat input
West Virginia	5/75							0.05-0.34[b]				N.S.	Btu from total design input
Wisc. Milwaukee Co.	5/74			20[b]		300/hr[b]		0.10-0.60[b]				N.S.	Btu input to stack
Washington	5/75							0.1-0.3[b]					Btu input
Wyoming	6/75	0.20[c]	0.10[c]	40	20	900/8 hr	120/hr	0.18-0.60[b]				7/75	Btu input

[a] When range of values is given, emissions are from tables in regulations.

[b] Old or new boiler not stated.

[c] Wet or dry scf not stated.

NOT REPRODUCIBLE

$$10.5 \frac{\text{lb part.}}{\text{hr}} \times \frac{\text{hr}}{60 \text{ million Btu}} = 0.175 \frac{\text{lb part.}}{\text{million Btu}}$$

$$10.5 \frac{\text{lb part.}}{\text{lb}} \times \frac{\text{hr}}{6{,}000 \text{ lb fuel}} \times \frac{2{,}000 \text{ lb}}{\text{ton}}$$

$$= 3.5 \frac{\text{lb part.}}{\text{ton fuel}}$$

The particulate emission from this boiler may be expressed in several ways:

(1) $0.10 \frac{\text{grain}}{\text{dscf}} = 0.229 \frac{\text{gram}}{\text{sdc meter}}$

(2) $10.5 \frac{\text{pounds}}{\text{hour}}$

(3) $0.175 \frac{\text{pound}}{\text{million Btu}}$

(4) $3.5 \frac{\text{pounds}}{\text{ton of fuel}}$

Figure 32 shows these values superimposed on process weight charts for the States of Vermont and Missouri. This unit would be operating just in compliance in Vermont. In Missouri it could be emitting twice as much particulate and still be in compliance with standards for new boilers. If the boiler were classed as an "existing" boiler in Missouri, it could be emitting 0.25 grain per dscf and still be in compliance.

Figure 33 shows tha data from Table 15 and Figure 28 (assumed for 60,000 pounds of steam per hour boilers) super-

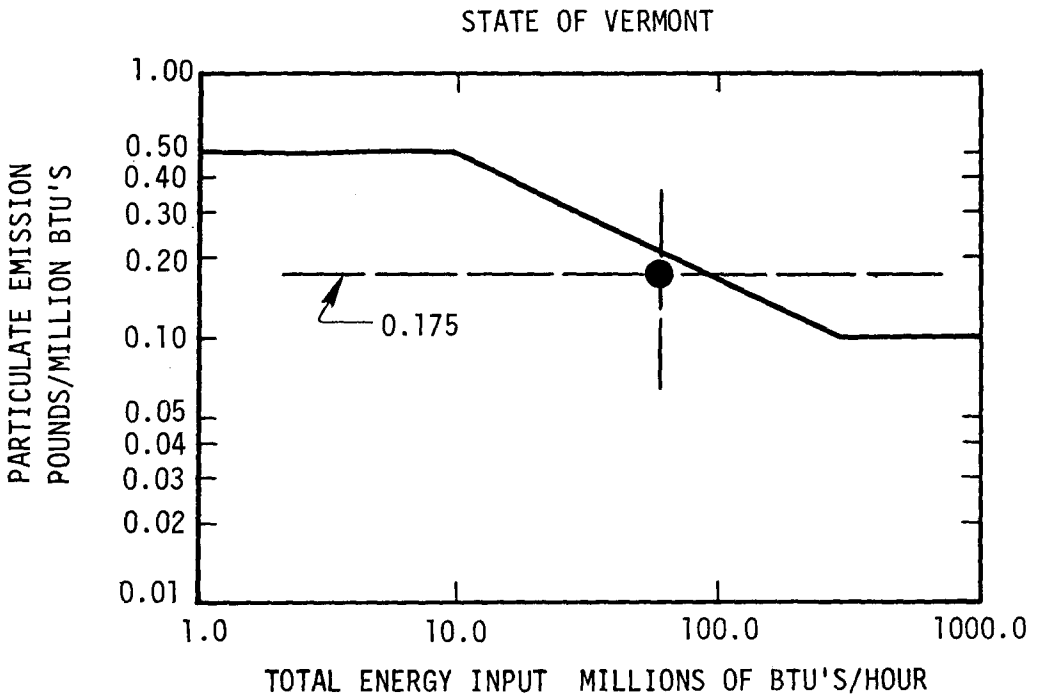

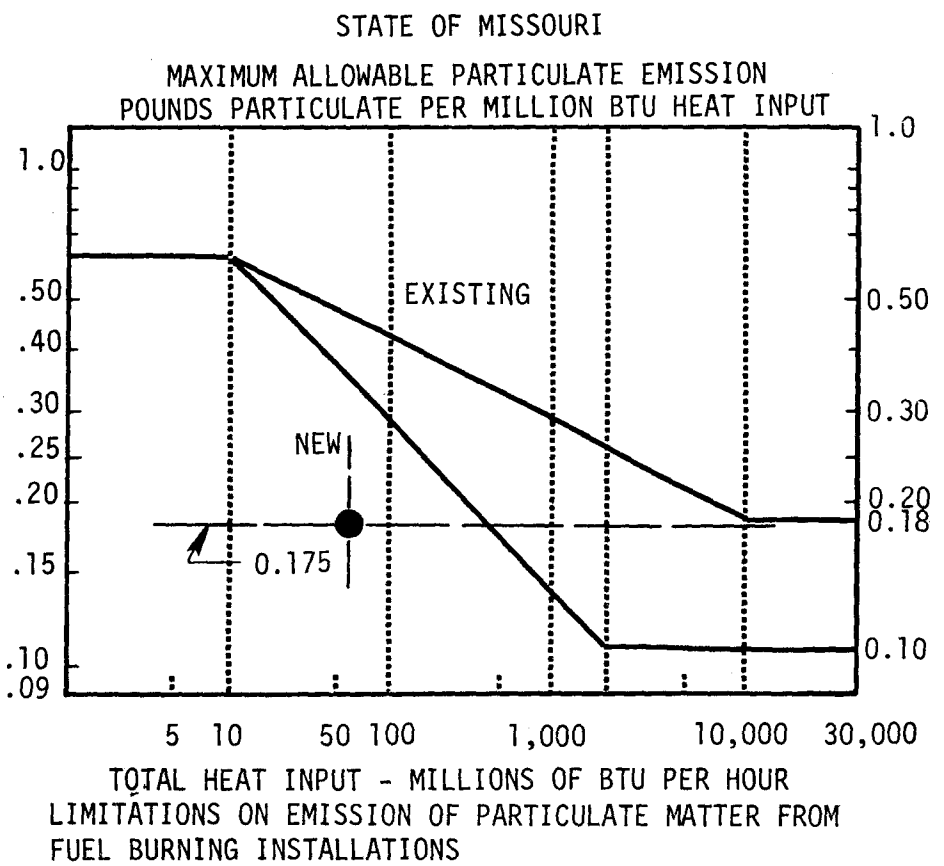

Figure 32. Process weight charts.

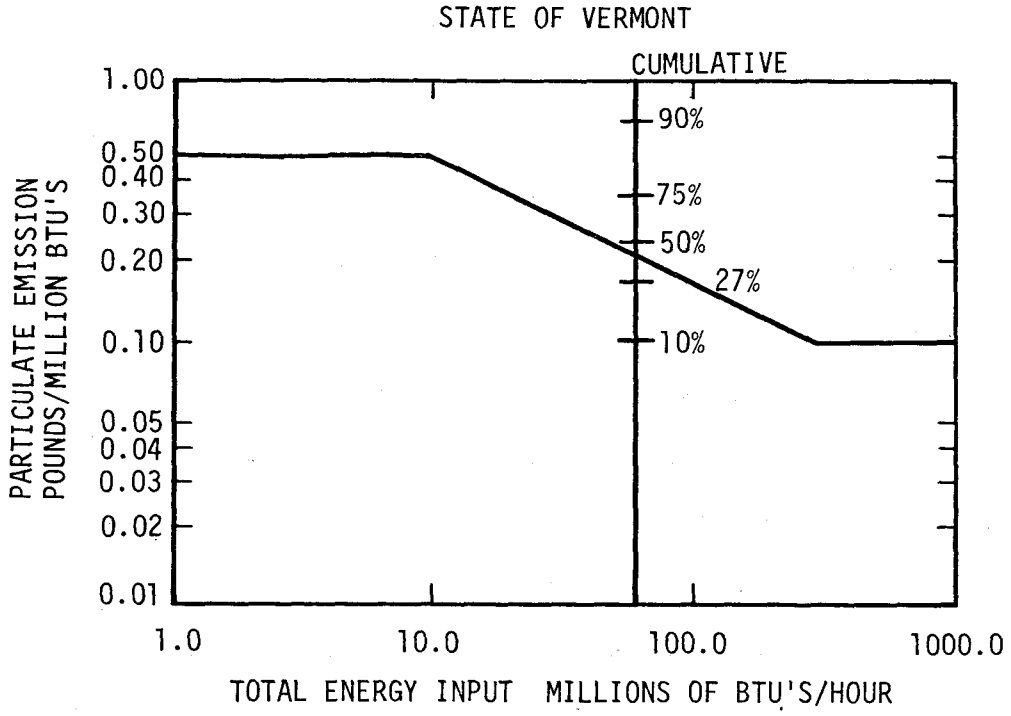

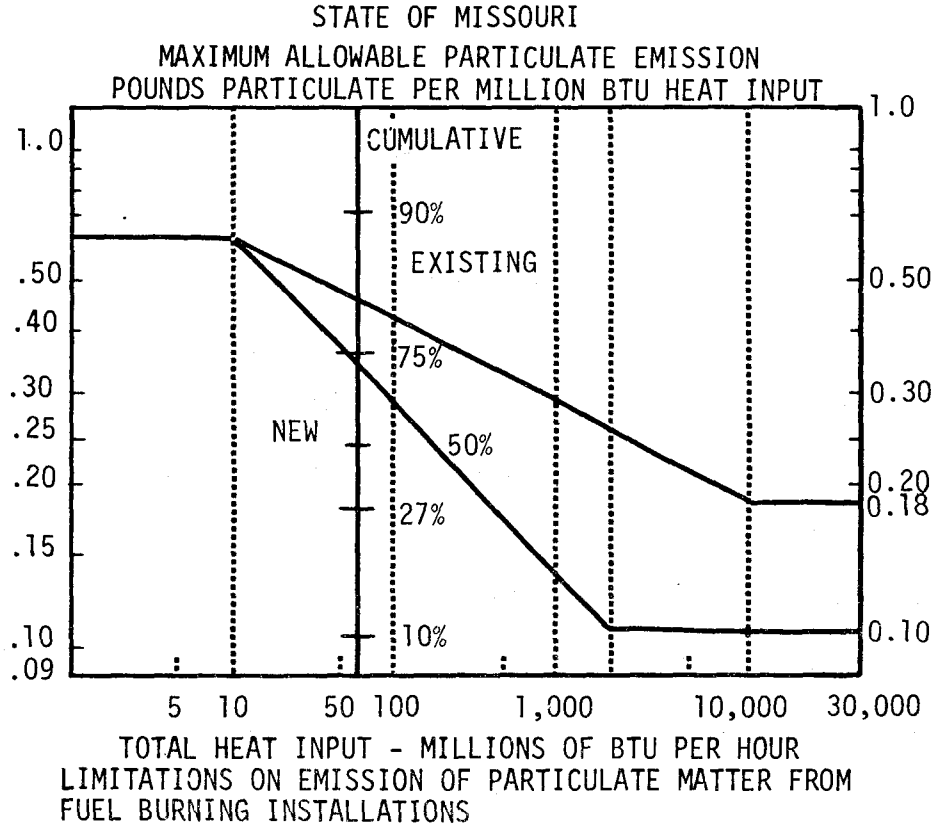

Figure 33. 135 Oregon and Washington boiler tests on two process weight charts.

imposed on the Vermont and Missouri process weight charts. Had these boilers been operating in Vermont, 42 percent would have been in compliance. In Missouri, 71 percent would have met the standard for new boilers and 82 percent would have been in compliance as existing boilers.

Regulations based on such process weight charts could give rise to another type of situation. Suppose the owners of a major forest products manufacturing complex wish to convert from oil or gas firing to wood firing. They calculate their steam demand as follows:

1. Sawmill dry kiln: 30,000 pounds/hr.
2. Plywood veneer dryer: 30,000 pounds/hr.
3. Particle board plant dryer: 30,000 pounds/hr.

Should they construct a 30,000-pound-per-hour boiler at each facility or a single 90,000-pound-per-hour boiler? In favor of one large boiler are the lower capital cost, lower operating cost for labor, fuel handling, etc., and the potential for using different boilers or furnaces to obtain maximum efficiency.

Examination of the process weight charts shows another point that the owners must consider. Figure 34 shows the two charts pertaining to Vermont and Missouri. The allowable emission values are shown in Table 36. Only the values for a new boiler in Missouri are shown.

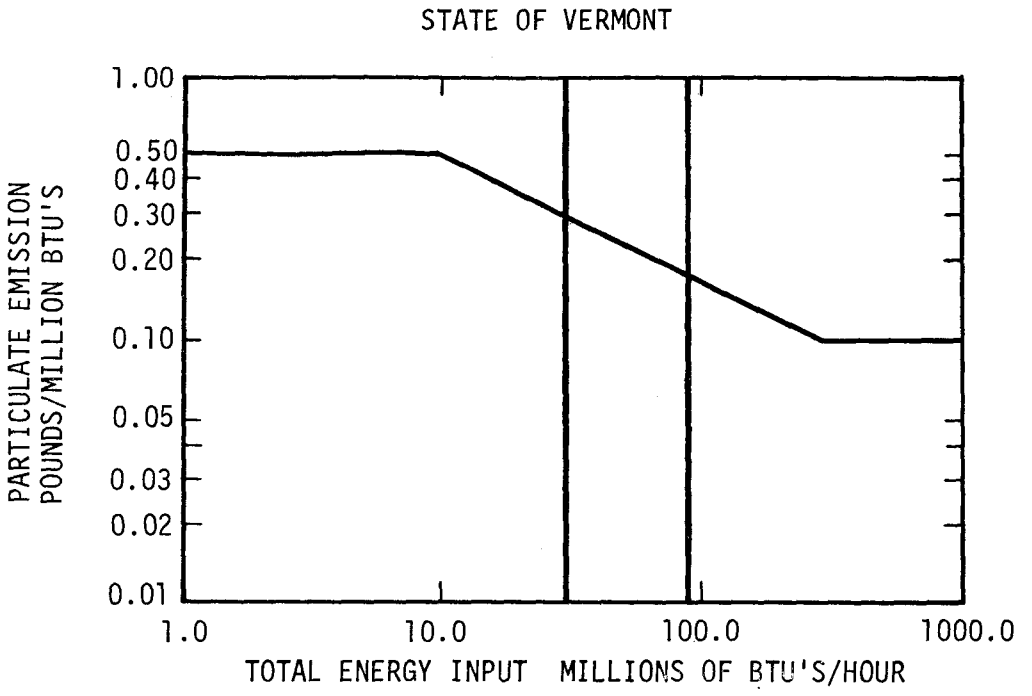

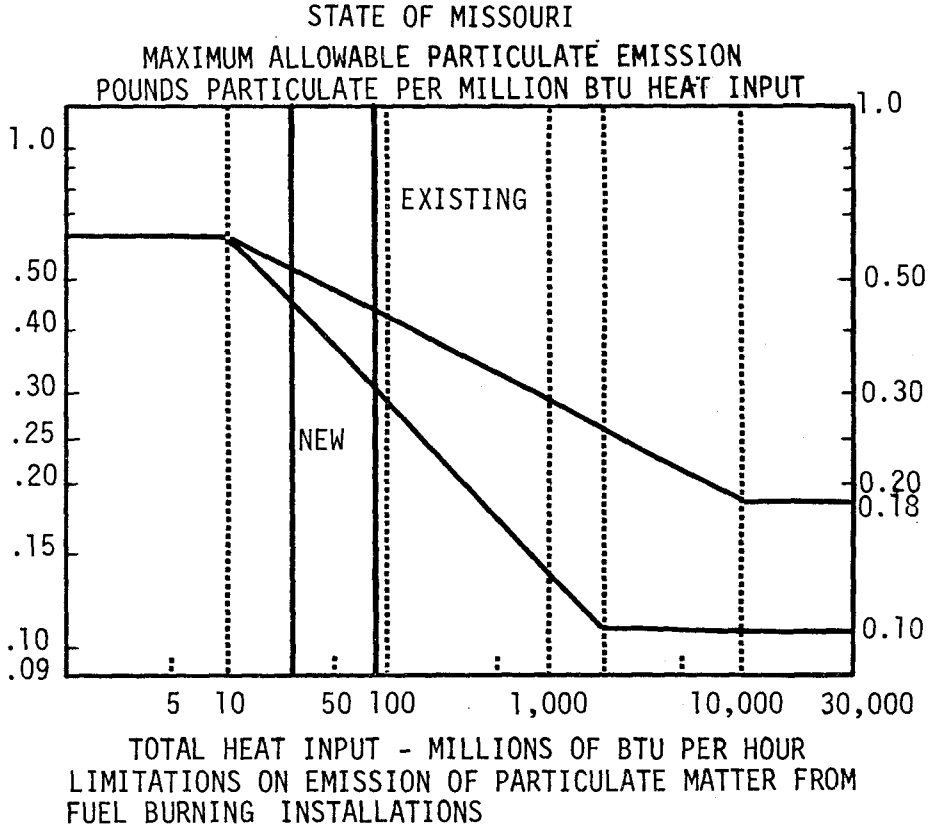

Figure 34. 30 and 90 million Btu/hour allowable emissions.

Table 36. ALLOWABLE PARTICULATE EMISSIONS FROM BOILERS IN VERMONT AND MISSOURI

Design	Vermont			Missouri		
	$lb/10^6$ Btu	gr/scf	lb/hr	$lb/10^6$ Btu	gr/scf	lb/hr
3-30,000 lb/hr	0.300	0.17	27	0.43	0.25	39
1-90,000 lb/hr	0.175	0.10	16	0.30	0.17	27

Inspection and Enforcement

The air pollution control inspector assigned to plants that operate wood-fired boilers should be thoroughly familiar with wood fuels, furnaces, and boilers. He must realize the differences and similarities among these and other types of boilers and control equipment. The use of standardized permits, forms, and records, will aid the inspector in his duties and is recommended.

Standard Forms

The Oregon-Washington wood-fired-boiler committee composed of representatives of industry, control agencies, and educational institutions has developed several forms for boiler classification, inspection, source tests, etc.[26] Agencies may wish to adopt this material as a basis for their own forms.

Standard forms should be required for reporting of source tests, since they are ameanable to computerization and tabulation of results. If all the states and regions were to adopt a uniform standard report form, this would facilitate reporting by the companies that operate in a number of states and regions.

Required Records and Charts

Company charts and records should be available for inspection by control agencies. It was recommended earlier

that the original charts be retained for 30 days. If an agency wishes further information (such as hourly opacity readings for a year) they should arrange with the facility operator to determine who is responsible for transcribing the chart data to other forms and records.

It is suggested that control agencies cross-reference their reports and records pertaining to wood-fired boilers so that the information can be retrieved easily. In preparation of this report some of the difficulty in obtaining information was caused by inadequate reference systems rather than lack of information.

Wood-fired boilers offer great potential for generation of energy from renewable fuels. If properly designed, constructed, and operated they can be expected to contribute a minimum of pollution to the atmosphere.

REFERENCES

1. Corder, S.E. Properties and Uses of Bark as an Energy Source. Paper prepared for XVI IUFRO World Congress, Oslo, Norway, June, July, 1976.

2. Food and Agricultural Organization of the United Nations. Yearbook of Forest Products for 1972. Rome, 1974.

3. Corder, S.E. Wood and Bark as Fuel. Oregon State University, Forest Research Laboratory Bulletin 14, Corvallis, Oregon, August, 1973.

4. de Lorenzi, O., Editor Combustion Engineering. First Edition, Published by Combustion Engineering-Superheater, Inc., New York, 1952.

5. Surprenant, N. et al. Preliminary Emissions Assessment of Conventional Stationary Combustion Systems. Report prepared for U.S. EPA by GCA Corp., Bedford, Mass., January, 1976.

6. Brown, O.D. Energy Generation From Wood-Waste. Paper prepared for International District Heating Association, French Lick, Indiana, June 20, 1973.

7. Energy Recovery From Solid and Wood Wastes - for Lane County Oregon. Project No. C7774.0, CH_2M/HILL, Corvallis, Oregon, 1973.

8. Junge, D.C. Boilers Fired With Wood and Bark Residues. Oregon State University, Forest Research Laboratory Bulletin 17, Corvallis, Oregon, November 1975.

9. Mingle, J.G. and R.W. Boubel. Proximate Analysis of Some Western Wood and Bark. Wood Science, 1:1, pp. 29-36, July 1968.

10. Johnson, R.C. Some Aspects of Wood Waste Preparation for Use as a Fuel. Tappi, 58(7), pp. 102-106, 1975.

11. Keller, F.R. Fluidized Bed Combustion Systems for Energy Recovery from Forest Products Industry Wastes. Paper presentation from Forest Products Research Society Meeting, Denver, Colorado, September 1975.

12. Dearborff, D. Wet Wood Waste as a Viable Fuel Supply. Paper presentation from Forest Products Research Society Meeting, Denver, Colorado, September 1975.

13. Jasper, M. and P. Koch. Suspension Burning of Green Bark to Direct-Fired High-Temperature Kilns for Southern Pine Lumber. Paper presentation from Forest Products Research Society Meeting, Denver, Colorado, September 1975.

14. Archibald, W.B. Some Design and Economic Considerations in Wood Waste Burning. In wood and bark residues for energy, Forest Research Laboratory Conference, Oregon State University, Corvallis, Oregon, February 1975.

15. Environmental Protection Agency--Standards of Performance for New Stationary Sources, Federal Register, Vol. 36, No. 247, Part II, December 23, 1971.

16. Boubel, R.W. A High Volume Sampling Probe, Journal of the Air Pollution Control Association, Vol. 21, pp. 783-787, 1971.

17. Boubel, R.W., J. Hirsch, and B. Sadri. Particulate Sampling has Gone Automatic, Proceedings of the Annual Meeting of the Air Pollution Control Association, Boston, Mass., 1975.

18. Morford, J.M. The Comparison of a High-Volume Sampling Method with EPA Method 5 for Particulate Emissions from Wood-Fired Boilers, Air Resources Center, Oregon State University, September 1975.

19. Strickland, S.R. A Comparison of the Emission Factors for the Open Burning of Agricultural and Logging Residues versus the Energy Utilization of these Residues, Project for M.S. Thesis, Department of Mechanical Engineering, Oregon State University, December 1975.

20. Cristello, J.C. An Evaluation of the Lear Siegler RM-4 Optical Transmissometer as a Continuous Particulate Monitor, Project for M.S. Thesis, Department of Mechanical Engineering, Oregon State University, July 1974.

21. Adams, A.B. Corrosion Problems with Wet Scrubbing Equipment, Journal of the Air Pollution Control Association, 26(4), pp. 303-307, 1976.

22. Mick, A.H. Wood Waste Fired Boilers: Wet Scrubber Technology, Proceedings of the Annual Meeting of the Air Pollution Control Association, Portland, Oregon, 1976.

23. Betchley, R.H. The Use of Electrostatic Precipitators on Controlled Low Odor Furnaces and Bark Burning Boilers in the Paper Industry, Paper presentation to Annual Meeting PNWIS Section of APCA, Paper 73-AP-27, November 1973.

24. Atmospheric Emissions from the Pulp and Paper Manufacturing Industry - Report on NCASI-EPA Cooperative Study Project, NCASI Technical Bulletin No. 69, February 1974.

25. A Guide to Estimating Heat Input Combination Boiler Emission Rate Calculations, NCASI Technical Bulletin No. 70, March 1974.

26. Emission Testing Standard for Wood Fuel Boilers, Presented by the Oregon-Washington 1973 Hog Fuel Boiler Study Committee, Oregon Department of Environmental Quality, November 1973.

APPENDIX A

NUMBER OF WOOD-FIRED BOILERS BY STATE*

---

* Estimates are based on a regression analysis of wood consumption by state, using the equation:

$$N = 0.0416\ Q + 12.7$$

where N = Number of boilers
Q = Wood consumption, 1000 TPY

Precision of the regression analysis: $r^2 = 0.61$

No. Boilers = 0.041564 (Total Ton/Year) + 12.7, r^2 = 0.61

State	No. of Wood Fired Boilers (* Estimated)	Industrial Consumption, 10^3 Ton/Year (5)	Commercial-Institutional Consumption 10^3 Ton/Year (5)	Total Industrial + Institutional-Commercial, 10^3 Ton/Year
Alabama	96	872	0	872
Alaska	10	104	0	104
Arizona	14	0	0	0
Arkansas	*100	2111	0	2111
California	* 69	1359	0	1359
Colorado	9	2	0	2
Connecticut	* 0	0	0	0
Delaware	0	0	0	0
Florida	* 99	2084	0	2084
Georgia	102	2286	0	2286
Hawaii	0	0	0	0
Idaho	* 61	1166	0	1166
Illinois	14	1	0	1
Indiana	* 15	48	0	48
Iowa	0	0	0	0
Kansas	2	0	0	0
Kentucky	* 16	68	2.5	70.5
Louisiana	50	1624	0	1624
Maine	35	1298	0	1298
Maryland	4	0	0	0
Massachusettes	10	3	0	3
Michigan	27	0	0	0
Minnesota	12	87	61.8	148.8
Mississippi	20	1284	3.9	1287.9
Missouri	11	15	0	15
Montana	44	632	0	632
Nebraska	0	0	0	0
Nevada	1	0	0	0
New Hamshire	13	24	0	24
New Jersey	0	0	0	0
New Mexico	3	0	0	0
New York	47	0	0	0
North Carolina	35	2615	0	2615
North Dakota	0	0	0	0
Ohio	8	9	0	9
Oklahoma	* 0	0	0	0
Oregon	318	4336	63.4	4399.4
Pennslyvania	27	154	0	154
Rhode Island	0	0	0	0
South Carolina	32	677	0	677
South Dakota	2	4	0	4
Tennessee	75	597	0	597

State	No. of Wood Fired Boilers (* Estimated)	Industrial Consumption, 10^3 Ton/Year (5)	Commercial-Institutional Consumption 10^3 Ton/Year (5)	Total Industrial + Institutional, Commercial, 10^3 Ton/Year
Texas	25	323	0	323
Utah	0	0	0	0
Vermont	30	51	0	51
Virginia	23	626	0	626
Washington	98	3771	0	3771
West Virginia	* 0	0	0	0
Wisconsin	100	414	5.6	419.6
Wyoming	4	0	0	0
TOTAL	1693	28,645	137.0	28,782

APPENDIX B

CHARACTERISTICS OF BARK FUEL

Table B-2. A SUMMARY OF SOME PUBLISHED VALUES OF PROXIMATE ANALYSES FOR BARK[1]

Species	Volatile matter	Fixed carbon	Ash
	Percent by dry weight		
Coniferous			
Fir, Douglas (*Pseudotsuga menziesii*)	70.6	27.2	2.2
Fir, Balsam (*Abies balsamea*)	77.4	20.0	2.6
Fir, Grand (*Abies grandis*)	74.9	22.6	2.5
Hemlock, Eastern (*Abies canadensis*)	72.0	25.5	2.5
Hemlock, Western (*Abies heterophylla*)	74.3	24.0	1.7
Pine, Jack (*Pinus banksiana*)	74.3	23.6	2.1
Pine, Ponderosa (*Pinus ponderosa*)	73.4	25.9	0.7
Redwood (*Sequoia sempervirens*)	71.3	27.9	0.8
Spruce, Black (*Picea mariana*)	74.7	22.5	2.8
Spruce, Red (*Picea rubens*)	72.9	23.7	3.3
Spruce, White (*Picea glauca*)	72.5	24.0	3.5
Tamarack (*Larix laracina*)	69.5	26.3	4.2
Non-Coniferous			
Alder, Red (*Alnus rubra*)	74.3	23.3	2.4
Beech, American (*Fagus grandifolia*)	75.2	16.9	7.9
Birch, Paper (*Betula papyrifera*)	80.3	18.0	1.7
Birch, Yellow (*Betula alleghaniensis*)	76.5	21.0	2.5
Elm, American (*Ulmus americana*)	73.1	18.8	8.1
Maple, Red (*Acer rubrum*)	78.1	18.9	3.0
Maple, Sugar (*Acer saccharum*)	75.1	19.9	5.0

Table B-1. A SUMMARY OF SOME PUBLISHED ULTIMATE ANALYSES OF BARK[1]

Species	Carbon	Hydrogen	Oxygen and Nitrogen	Ash
	Percent by dry weight			
Coniferous				
Fir, Douglas (*Pseudotsuga menziesii*)	53.0	6.2	39.3	1.5
Fir, Balsam (*Abies balsamea*)	52.8	6.1	38.8	2.3
Hemlock, Eastern (*Tsuga canadensis*)	53.6	5.8	40.1	2.5
Hemlock, Western (*Tsuga heterophylla*)	51.2	5.8	39.3	3.7
Pine, Jack (*Pinus banksiana*)	53.4	5.9	38.7	2.0
Pine, Scots (*Pinus silvestris*)	54.4	5.9	38.0	1.7
Spruce, Black (*Picea mariana*)	52.0	5.8	39.8	2.4
Spruce, Norway (*Picea abies*)	50.6	5.9	40.7	2.8
Spruce, Red (*Picea rubens*)	52.1	5.7	39.1	3.1
Spruce, White (*Picea glauca*)	52.4	6.4	38.2	3.0
Tamarack (*Larix laracina*)	55.2	5.9	34.7	4.2
Non-Coniferous				
Beech, American (*Fagus grandifolia*)	47.5	5.5	39.1	7.9
Birch, European White (*Betula verrucosa*)	56.6	6.8	35.0	1.6
Birch, Paper (*Betula papyrifera*)	57.4	6.7	34.1	1.8
Birch, Yellow (*Betula alleghaniensis*)	54.5	6.4	36.8	2.3
Elm, American (*Ulmus americana*)	46.9	5.3	39.7	8.1
Maple, Red (*Acer rubrum*)	50.1	5.9	41.0	3.0
Maple, Sugar (*Acer saccharum*)	50.4	5.9	39.6	4.1

Table B-4. A SUMMARY OF SOME PUBLISHED HEATING VALUES AND ASH CONTENTS FOR BARK OF NONCONIFEROUS SPECIES[1]

Species	Higher heating value[1] (Gross calorific value[1]) Kcal/kg	Btu/lb	Ash content[1] Percent
Alder, Red (*Alnus rubra*)	4,687	8,436	3.1
Aspen, Quaking (*Populus tremuloides*)	4,958	8,924	2.8
Beech, American (*Fagus grandifolia*)	4,244	7,640	7.9
Birch, European white (*Betula verrucosa*)	5,790	10,422	1.6
Birch, Paper (*Betula papyrifera*)	5,506 5,728	9,910 10,310	1.5 1.8
Birch, Yellow (*Betula alleghaniensis*)	5,319 5,111	9,574 9,200	1.7 2.3
Blacktupelo (*Nyssa sylvatica*)	4,412	7,942	7.2
Cottonwood, Black (*Populus trichocarpa*)	5,000	9,000	-
Elm, American (*Ulmus americana*)	4,121 4,222	7,418 7,600	9.5 8.1
Maple, Red (*Acer rubrum*)	4,500	8,100	3.0
Maple, Sugar (*Acer saccharum*)	4,315 4,572	7,767 8,230	6.3 4.1
Oak, Northern Red (*Quercus rubra*)	4,667	8,400	5.4
Oak, White (*Quercus alba*)	4,156	7,481	10.7
Sweetgum (*Liquidambar styraciflua*)	4,412 4,237	7,942 7,627	5.7 -
Sycamore, American (*Platanus occidentalis*)	4,237	7,909	5.8
Willow, Black (*Salix nigra*)	4,268	7,683	6.0

[1]Based on oven-dry weight.

Table B-3. A SUMMARY OF SOME PUBLISHED HEATING VALUES AND ASH CONTENTS FOR BARK OF CONIFEROUS SPECIES[1]

Species	Higher heating value[1] (Gross calorific value[1]) Kcal/kg	Btu/lb	Ash content[1] Percent
Fir, Douglas (*Pseudotsuga menziesii*)	5,611	10,100	-
Fir, Balsam (*Abies balsamea*)	5,265 5,056	9,477 9,100	2.3 2.3
Hemlock, Eastern (*Tsuga canadensis*)	5,213 4,939	9,383 8,890	1.6 2.5
Hemlock, Western (*Tsuga heterophylla*)	5,444	9,800	-
Larch, Western (*Larix occidentalis*)	4,885	8,793	1.6
Pine, Jack (*Pinus banksiana*)	5,211 4,961	9,380 8,930	1.7 2.0
Pine, Lodgepole (*Pinus contorta*)	5,997	10,794	2.0
Pine, Scots (*Pinus silvestris*)	4,775	8,595	1.7
Pine, Slash (*Pinus elliottii*)	5,343	9,618	0.6
Pine, Southern (Mixed species)	4,909	8,837	-
Pine, Spruce (*Pinus glabra*)	4,787	8,617	-
Pine, Virginia (*Pinus virginiana*)	4,680	8,424	-
Redcedar, Western (*Thuja plicata*)	4,833	8,700	-
Spruce, Black (*Picea mariana*)	4,899 4,783 5,000	8,819 8,610 9,000	2.0 2.4 -
Spruce, Engelmann (*Picea engelamannii*)	4,914	8,846	2.5
Spruce, Norway (*Picea abies*)	4,760	8,568	2.8
Spruce, Red (*Picea rubens*)	4,794	8,630	3.1
Spruce, White (*Picea glauca*)	4,739	8,530	3.0
Tamarack (*Larix laracina*)	5,006	9,010	4.2

APPENDIX C

NATIONAL COUNCIL OF THE PAPER INDUSTRY

FOR AIR AND STREAM IMPROVEMENT

AIR QUALITY IMPROVEMENT TECHNICAL BULLETIN NO. 70

A GUIDE TO ESTIMATING HEAT INPUT FOR COMBINATION BOILER EMISSION RATE CALCULATIONS

I INTRODUCTION

Through the years various methods have been developed to express the magnitude of particulate emissions from point sources. The simplest and probably first method used was concentration of mass per standard unit volume of flue gas. The units used (and still used in many instances today) were grains per standard dry cubic foot (SDCF). A concentration adjustment based on a fixed CO_2 content of the flue gas or amount of excess air above that theoretically needed for combustion has been commonly applied to measured particulate concentrations from boilers burning fossil fuels. This concentration adjustment is still used today by many regulatory agencies to standardize particulate concentration values and avoid situations where dischargers can meet a permissible concentration level by dilution.

The particulate concentration adjustment factors used for fossil fuel fired boilers have not been applied to process sources such as lime kilns or kraft recovery furnaces or a host of other industrial operations since the flue gas composition differs widely for manufacturing operations.

Another approach extensively used to express allowable particulate emissions from fossil fuel fired boilers relates heat input to the boiler to allowable emissions. The units of expression for this method are "pounds per million Btu heat input." The units of expression are used over any range of boiler loading or combustion condition.

EPA promulgated standards of performance for new stationary sources, published in the Federal Register on December 23, 1971, express allowable emission rates in pounds/million Btu input for fossil fuel fired steam generators.

Many state and local regulatory agencies have formulated particulate standards for fossil fuel fired boilers that also express permissible limits for particulates as lbs. per 10^6 Btu. In formulating particulate emission regulations for combination fuel fired boilers the same method of expression for describing permissible limits have frequently been used. It was unfortunately assumed that the same methods for accurately measuring fuel flow for fossil fuel fired power boilers existed and were used on these combination boilers. This is usually true in those cases where oil or gas are burned but not so where coal and bark are burned. In probably no more than 10% of the cases in this country where wood derived fuel is burned, are there facilities installed to weigh bark flow, although such facilities do exist.

In those cases where agencies require particulate emissions from combination boilers to be expressed as lbs./10^6 Btu's, this cannot be done by direct measurement of fuel inputs in the majority of cases. In view of these facts it is felt that a review of the methods for calculating or estimating the heat inputs to a boiler burning bark is both timely and desirable.

This report reviews the method for calculating heat inputs by measuring fuel feed rates as is recommended in the Federal Register. Examples are shown to provide the reader an idea of the accuracy of "Heat Input" calculations when applied to boilers burning wood derived fuel. Several methods for estimating heat input are demonstrated and the relative merits or pitfalls of these estimations are discussed.

II GLOSSARY OF TERMS

E = particulate emission rate in lb/10^6Btu

C = particulate concentration in grains/SDCF

SDCF = one cubic foot of dry gas at 29.92" Hg pressure and 530°R temperature

Q_f = boiler gaseous effluent flow rate in SDCFM

H_I = gaseous heat input to a boiler expressed in 10^6 Btu/hr.

H_o = heat output from a furnace in 10^6 Btu/hr.

h_{stm} = enthalpy of steam in Btu/lb. of steam

h_{fw} = enthalpy of feed water in Btu/lb. of feed water

W_s = steam generation rate of a boiler in # steam/hr

e = boiler efficiency; the ratio of boiler heat output H_o to boiler heat input, H_I

V_s = stack gas flow in SDCFM

F = fuel oil flow in GPM

B = bark feed rate in lb/hr. (oven dry basis)

f_{EA} = excess air correction; $\dfrac{20.9}{20.9 - \%\ O_2 \text{ (in flue gas)}}$

G = fuel gas flow rate in CFM

III BOILER PARTICULATE EMISSION RATE CALCULATIONS

The method for calculating particulate mass emission rate used by EPA and other agencies is in this or similar form:

$$E = \frac{CQ_f}{H_I} \times \frac{60}{7000} \qquad (1)$$

It is evident from equation 1 that three items must be measured before the emission rate E can be calculated. One is C or the particulate concentration. This value is determined in accordance with federal,state, or local procedures when compliance testing is conducted. Other methods may be used for other purposes, and a discussion of the various procedures is beyond the scope of this report. For illustrative purposes it will be assumed that the value for C in all examples in this report has been determined to be 0.1 gr/SDCF. The second term of information, Q_f, is the total stack gas flow rate as determined by a suitable method in a stack of known cross section. Again, a discussion of the procedure used to determine Q_f is beyond the scope of this report. In all examples in this report, it is assumed Q_f has been determined to be 120,000 SDCFM.

The ratio $\frac{60}{7000} \frac{\text{min-lbs}}{\text{hour-grains}}$ is a constant used to convert the particulate emission rate from grains/SDCF to lbs/hr. In the denominator of equation 1 is the total heat input to the boiler in 10^6 Btu/hr, H_I. This item of information and its determination will be the subject of the bulk of this report.

IV DETERMINING BOILER HEAT INPUT FROM OIL AND GAS

The term H_I is easily determined on straight oil fired boilers since #6 residual oil has a chemical composition that is so constant the heat content may be assumed to be 150,000 Btu gallon measured at 60°F (2), and the measurement of liquid flow is simple, accurate and commonly practiced. Likewise, the measurement of natural gas presents little problem. The carbon hydrogen content of natural gas varies causing a shift in the heat content of gas gener ly assumed to be 1050 Btu/ft^3 at 60°F and 30" Hg. (3). Caution mus therefore be taken to define heating gas heat value.

V DETERMINING BOILER HEAT INPUT FROM WOOD DERIVED FUEL

A. Fuel Moisture Content and Fuel Heating Value Related Errors in Estimating Heat Input

(1) Moisture Content - When bark is used as a fuel, the problem of measuring heat input by weighing the fuel is complicated by the fact that the moisture content of the bark can vary considerably. Wood derived fuel either on the log or subsequent to barking, is usually stored outside where it is subject to weather conditions. It may also be derived from wet or dry barking which affects moisture content causing the heat content on an "as is" basis (which is the way it is weighed when being fed to the boiler) to vary considerably. Therefore, to achieve maximum accuracy in the weight of wood derived fuel fired, several samples should be taken during the particulate test for determination of representative moisture content on a composite sample.

(2) Heating Value - Another complication arises from the varable heating value of bark (O.D. basis) which varies depending on the source species. A cursory search of the literature (2,4,5,6) gives a range of over 2,000 Btu/O.D. lb. for different species of bark and wood fuels. If the type of fuel being burned is known this range of heat value may be reduced to about ±200 Btu/O.D. lb., according to literature references.

If the heat content of a composite sample of wood fuel were determined using a bomb calorimeter, the range of uncertainty could be reduced to about ± 100 Btu/lb. Needless to say this procedure is time-consuming but it may be a desirable for fuels burned during the conduct of compliance tests.

Knowing the heat content of all fuels being burned and the feed rate, the heat input can then be determined. The following example shows actual data from a typical Southern mill combination boiler firing #6 residual oil and Southern pine bark to illustrate the degree of uncertainty in estimating heat input with inadequate fuel heating value information. The ranges of uncertainty in this example are based on differences in heating values reported in the literature and based on actual experience in measuring variables such as bark moisture content.

EXAMPLE 1. CALCULATING HEAT INPUT (H_I) WHEN USING FUEL FLOW MEASUREMENTS

I OIL DATA	VALUE	RANGE
A. Feed Rate:	15.2 GPM	±0.1
B. Heat Content:	150,000 Btu gal.	±150
C. Heat Input Due to Oil: $H_{I\text{-}oil}$ = (15.2 x 150,000 x 60)	= 136.8 x 10^6 Btu/hr.	± 1.04 x 10^6

II BARK DATA

A. Feed Rate (as is)	82,000 lb/hr.	± 1000
B. Heat Value (1)*	8,900 Btu/O.D. lb.	± 1000
(2)*	8,900 Btu/O.D. lb.	± 100
C. Average Bark Moisture	48%	± 5% (absolute-ran 43 to 53)

D. Feed Rate (O.D. basis)

$$82{,}000 \text{ lb/hr.} \times \frac{100-48}{100} = 42{,}640 \text{ lb/hr.} \pm 4{,}620$$

E. Total Heat due to Bark: $H_{I\text{-}bark}$

II-B-(1) 42,640 x 8900 = 379.5 x 10^6Btu/hr. ± 83.8 x 10^6

II-B (2) 42,640 x 8900 = 379.5 x 10^6Btu/hr. ± 46.3 x 10^6

*NOTE: Value for (1) and II-B-1 based on literature source.

Value for (2) and II-B-2 as determined by bomb calorimeter, hence the smaller uncertainty range.

III TOTAL HEAT INPUT TO BOILER

$$H_I = H_{I\text{-}oil} + H_{I\text{-}bark}$$

$$H_I = (136.8 + 379.5) \times 10^6 \text{Btu/hr.}$$

$$H_I = 516.3 \times 10^6 \text{ Btu/hr.}$$

Using the mean heat value for bark taken from the literature the uncertainty range would be ±1000 Btu/lb. bark and the value for H_I would be

$$H_I = 516.3 \times 10^6 \text{Btu/hr.} \pm 84.8 \times 10^6$$

therefore the value for H would have an uncertainty range of ± 17% if other measurements were at limits of precision.

If the heat value for bark were actually determined to be 8900 Btu/# 100 by bomb calorimeter the value for H_I would be more precise and the uncertainty limits would be reduced. In this case

$$H_I = 516.3 \times 10^6 \text{Btu/hr.} \pm 46.3 \times 10^6$$

the range for H_I could be reduced to ± 9% if other measurements were at limits of precision.

This exercise demonstrates that where heat input determinations are made when wood derived fuel is used, the accuracy of the heat input determination is much less than when straight oil or gas is burned. Inability to obtain representative samples for moisture content and inadequate fuel heating value data are problem areas even though fuel is weighed. The accuracy with which heat input can be determined is dependent on (a) accuracy of the wood derived fuel heating value, (b) inherent limits of determining moisture content of wood derived fuel,and (c) the ratio of wood derived to auxiliary fuel, the larger the ratio the greater the potential discrepancy.

B. Potential Errors in Estimating Heat Input from Steam Flow Measurements

Since probably no more than 10% of the facilities burning bark have the capability to weigh bark flow, other means must be used to determine heat input. One common method is to estimate heat input from steam generation data. In addition to steam generation rate, the temperature and pressure of the steam generated and the temperature and pressure of the feed water must be known. The enthalpy of feedwater is subtracted from that of the steam and this result is multiplied by the steam generation rate, W_s, which is expressed in lbs/hour:

$$H_o = W_s \, (h_{stm} - h_{fw}) \qquad (3)$$

Then the heat input to the boiler, H_i may be determined by the equation

$$H_i = \frac{H_o}{e} \qquad (4)$$

where e is the efficiency of the boiler. The value e, which is always less than one, is a term which is used to define the portion

of heat generated which is not absorbed by the feedwater to generate steam. Heat is lost through various ways, e.g., radiation through boiler walls, stack losses, heat required to vaporize moisture in the fuel, load on the unit, care exercised in operating it, and boiler age.

The value of e which is initially selected by the boiler manufacturer at the time of design is therefore subject to many variables beyond his control. When burning wood derived fuel possibly the greatest of these variables is fuel moisture content.

This variable alone makes it difficult to arrive at a true gross heat input from steam generation data. Since regulations which relate emission rate to heat input relate them to gross heat input the procedure at best has severe limitations.

EXAMPLE 2. ESTIMATION OF HEAT INPUT BASED ON STEAM GENERATION RATE

Assume a boiler is generating 450,000 lbs/hour of 1250 psia steam at a temperature of 900°F. The assumed boiler efficiency for this boiler is 70% (e = 0.7). The heat input is determined as follows:

From steam tables

$$h_{steam} = 1438 \text{ Btu/lb.}$$

and

$$H_{fw} = 385 \text{ Btu/lb.}$$

therefore

$$H_o = 450{,}000\ (1438-385)$$

$$H_o = 473.85 \times 10^6 \text{Btu/hr.}$$

Using a value for e of 0.7 H_I can now be calculated

$$H_I = \frac{473.85}{0.7} \times 10^6$$

$$H_I = 676.92 \times 10^6 \text{Btu/hr}$$

VI ESTIMATING COMBINATION FUEL BOILER HEAT INPUT FROM COMBUSTION GAS MEASUREMENTS

A. Discussion of Heat Input Estimation Method

When oil and unweighed wood derived sources of fuel are simultaneously burned, it can be shown that the heat input (H_i) is expressed in the following equation:

$$H_I = 282.63\ KV_S\ [20.9 - \%\ O_2] + 0.75 \times 10^6 F \qquad (5)$$

where F = fuel oil flow in GPM (#6 residual oil)

V_S = stack flow is SDCFM

K is a variable that depends upon the heat content of the bark used. In the equation a heat value of 8900 Btu/O.D. lb. is assumec If another value for heat content is used, the value for K may be determined by dividing the heat content of the bark by 8900.

$$K = \frac{\text{heat content of bark}}{8900} \qquad (6)$$

As can be seen from equation 5 the only fuel flow rate needed is that for oil. The stack flow must be accurately determined and several Orsat analyses must be made during the particulate test in order to accurately determine flue gas oxygen concentrations. These are critical values since the gas flow due to bark is determined from these values and fuel value of the bark. An ultimate analysis of the bark is not required since a median value was incorporated in the constant during development of equation 5. A survey of the literature shows that the ultimate analysis does not vary widely from species to species so a single representative ultimate analysis was universally applied to all barks. The ultima analysis used in derivation of equation 5 was:

H_2 = 5.5%

C = 56.5%

O_2 = 37.0%

N_2 = 0.4%

Ash = 0.6%

The magnitude of change in estimating heat input with bark with a different ultimate analysis will be shown.

B. Example of Use of the Combustion Gas Volume Heat Input Estimating Procedure

EXAMPLE 3. ESTIMATING BOILER HEAT INPUT USING COMBUSTION GAS VOLUMES

Assume that during the particulate test the following data were collected:

V_s = 120,000 SDCFM

#6 oil flow = 15.2 GPM

$\%O_2$ = 6.0% (average of 12 readings)

Heat content of Douglas Fir bark = 10,100 Btu/O.D. lb.

The solution for H_I is:

$$H_I = 282.63 \times \frac{10100}{8900} \times 120{,}000\ [20.9-6.0] + 0.75 \times 15.2 \times 10^6$$

$$H_I = 573.48 \times 10^6 + 11.4 \times 10^6$$

$$H_I = 584.88 \times 10^6 \text{ Btu/hr.}$$

C. Combustion Calculations Used in Development of Gas Volume Heat Input Estimating Procedure

In order to show how equation 5 was derived, this section discusses the combustion calculations applied to a combination oil and bark boiler situation.

(1) Weight and Volume of Combustion Products - The weight and volume of the products of fuel combustion were developed from the ultimate analysis. In many cases this analysis can be obtained from a literature reference. In the example used for illustration an ultimate analysis of Douglas fir bark is used.

ULTIMATE ANALYSIS OF DOUGLAS FIR BARK

ELEMENT	% BY WEIGHT	÷	MOLECULAR WEIGHT	=	MOLE %
H_2	6.2	÷	2		3.1
C	53.0	÷	12		4.42
O_2	39.3	÷	32		1.23
N_2	[illegible]	÷	[illegible]		[illegible]

COMBUSTION REACTIONS

REACTION	REACTANTS	PRODUCTS
1. $2H_2 + O_2 \rightarrow 2\ H_2O$	H_2 = 3.1 moles (from a)	H_2O= 3.1 moles
	$O_2 = \frac{3.1}{2} = 1.55$ moles	
2. $C + O_2 \rightarrow CO_2$	C = 4.42 moles (from a)	CO_2 = 4.42 moles
	O_2 = 4.42 moles	

The moles (based on 1 gram) of each component are determined by the stoichiometry of the chemical equations 1 and 2. From the total moles of reactants and products the following may be determined:

TOTAL O_2 consumed (Reaction 1 and 2)= 1.55 + 4.42 = 5.97 moles

There are 1.23 moles of O_2 already present in the bark. Therefore, the total O_2 to be supplied from air to support theoretical combustion is:

5.97 - 1.23 = 4.74 moles

The composition of normal air is: (6)

N_2 = 78.1% by volume

O_2 = 20.9% by volume

other = 1.0% by volume

Since the "other" species are generally inert, the % volume of N_2 may be considered to be 79.1% (78.1+1.0). It may be noted that % by volume is equivalent to mole percent; therefore, these values may be expressed as mole percent.

WEIGHT OF COMBUSTION PRODUCTS

Since 4.74 moles of O_2 must be derived from air, then:

$4.74 \times \frac{79.1}{20.9}$ = 17.94 moles of N_2 must also be introduced.

The products formed are therefore

1. 17.94 moles N_2
2. 4.42 moles CO_2
3. 2.75 moles H_2O

and the weight of gaseous products formed in the combustion of 1 lb. of Douglas fir bark (assuming 0% excess air) would be:

lb. mole fraction x mole weight = weight (lbs)

$0.1794 \times 28 = 5.02$ lbs N_2

$0.0442 \times 44 = 1.95$ lbs. CO_2

$0.0275 \times 18 = 0.50$ lbs. H_2O

7.47 total products

The weight of normal air needed to theoretically oxidize 1 lb. of Douglas fir bark would be

lbs. H_2 = 5.02

lbs. O_2 = 1.52

6.54

As can be seen, 6.54 lbs. of normal air is required to oxidize 1 O.D. lb. of Douglas fir bark at 0% excess air. This formed 7.47# of gaseous products (N_2,H_2O,CO_2). The small apparent material imbalance of 0.07 lbs. is due to products that are solid rather than gaseous (e.g., ash).

VOLUME OF COMBUSTION PRODUCTS (DRY GAS)

Assume 1 gram of bark is oxidized. Since 1 gram-mole of any gas occupies 22.414 liters at a pressure of 760 mm. Hg and a temperature of 0° Celsius (6), this is the same as 0.8526 cubic feet at 29.92" Hg. and 70°F, or 0.8526 SDCF.

One gram-mole of this Douglas fir bark was shown to produce 0.1794 gram-moles of N_2 and 0.0442 gram-moles of CO_2. The volume of dry gas produced is:

$$0.1794 \text{ g-moles} \times 0.8526 \frac{ft^3}{\text{g-mole}} = 0.153 \text{ SDCF}$$

and 0.0442 g-moles x 0.8526 SDCF/g-mole = 0.038 SDCF

Total gas = 0.153 + 0.038 = 0.191 SDCF

Since there are 454 grams/lb., 1 lb. of O.D. Douglas fir bark will produce:

0.191 x 454 = 86.6 SDCF of gas at 0% excess air.

VOLUME OF COMBUSTION GAS FROM OTHER FUELS (DRY GAS)

Using the procedures for determining the dry gas volume of combustion products it can be shown that:

a. Pine bark with the following ultimate analysis (5):

ELEMENT	% BY WEIGHT
H_2	5.5
C	56.5
O_2	37.0
N_2	0.4
Ash	0.6

produces 90.3 SDCF of gas per pound of bark. This compares favorably to the 86.6 SDCF of gas produced by the bark from Douglas fir. Using other reported ultimate analyses the gas volume produced by 1 pound of O.D. bark was found to vary no more than ± 5% from the volume produced by 1 lb. of O.D. bark from another species. In the absence of an ultimate analysis the figure 90.3 SDCF/lb. of bark at 0% excess air can be considered a reliable estimate regardless of bark specy.

b. No. 6 fuel oil with the following ultimate analysis (2):

ELEMENT	% BY WEIGHT
H_2	10.5
C	85.7
S	2.8
O_2N_2	0.92
Ash	0.08

Heat content = 150,000 Btu/gal. or 18,500 Btu/lb. produces

172.1 SDCF of gas per lb. of oil.

c. Natural gas with the following ultimate analysis :

ELEMENT	% BY WEIGHT
CH_4	89%
C_2H_6	5%
C_3H_8	2%
C_4H_{10}	1%
CO_2	2%
N_2	1%

Heat content=1050 Btu/ft.^{3},produces 9.1 SDCF of gas per ft.^{3} of feed gas. This may vary as much as ± 15% as a result of fuel gas composition (3).

VII DERIVATION OF HEAT INPUT FROM GASEOUS COMBUSTION PRODUCTS EQUATION FOR BARK AND OIL

Using the relationships developed in the previous section on combustion calculations and assigning a constant value to the variables of combustion product volumes from oil and bark a general equation can be derived.

The following assumptions are made:

1) 1 pound bark generates 90.3 SDCF of dry gas at 0% excess air when combusted.

2) 1 pound of oil generates 172.1 SDCF of gas at 0% excess air when combusted or 1395 SDCF/gal. oil

3) Heating value of oil is 150,000 Btu/ gallon

The following variables are measured or are the result of measurements:

1) Fuel oil flow rate = F in Gal/min

2) V_s = Stack gas flow in SDCFM

3) f_{EA} = Excess air correction to adjust V_s to 0%

$$\text{oxygen content} = \frac{20.9}{20.9 - \%\ O_2 \text{ in flue gas}}$$

4) K = A variable defined as:

By definition:

$$H_I = H_{I\text{-oil}} + H_{I\text{-bark}} \qquad \text{(Eq 6)}$$

where

$$H_{I\text{-oil}} = 150{,}000 \text{ Btu/gal} \times 60 \text{ min/hr} \times F \text{ gal/min}$$

$$= F \times 9(10)^6 \text{ Btu/hr} \qquad \text{(Eq 7)}$$

$H_{I\text{-bark}}$ = Heating value of bark Btu/hr X bark feed rate (B) lb/hr

By definition:

$$K = \frac{\text{heating value of bark}}{8900}$$

then:

$$H_{I\text{-bark}} = 8900 \times K \times B \qquad \text{(Eq 8)}$$

The bark flow rate B is:

$$B = \frac{\left(\frac{V_s \text{SDCFM}}{f_{EA}} - \begin{array}{l}\text{Gas volume}\\ \text{from oil combustion SDCFM}\end{array}\right) \times 60 \text{ min/hr}}{90.3 \text{ SDCF/lb}} \qquad \text{(Eq 9)}$$

The gas volume from oil combustion is:

$$1395F \text{ SDCFM} \qquad \text{(Eq 10)}$$

Substituting equation 10 into equation 9 we get

$$B = 0.6644\left(\frac{V_s}{f_{EA}} - 1395\ F\right) \qquad \text{(Eq 11)}$$

Substituting equation 11 into equation 8:

$$H_{I\text{-bark}} = \frac{5913\ KV_s}{f_{EA}} - 8.25\ (10)^6 \times K \times F$$

Rearranging:

$$H_{I\text{-bark}} = 5913\ KV_s - 282.63\ KV_s\ \%O_2 - 8.25 \times 10^6 KF \qquad \text{(Eg 12)}$$

Substituting equations 7 and 12 into 6:

$$H_I = 5913\ KV_s - 282.63\ KV_s\%\ O_2 - 8.25 \times 10^6 KF + 9 \times 10^6 F \qquad \text{(Eq 13)}$$

Since the effect of K in the expression $8.25 \times 10^6 KF$ is small it may be assumed to be 1 and the equation can be simplified to

$$H_I = 282.63\ [20.9KV_s - O_2\ KV_s] + 0.75 \times 10^6 F \quad \text{which} \qquad \text{(Eq 14)}$$

is equation 5.

VIII DERIVATION OF HEAT INPUT FROM GASEOUS COMBUSTION PRODUCTS EQUATION FOR BARK AND GAS

Using the relationships developed in previous sections on combustion calculations and assigning a constant value to the combustion product volumes from gas and bark,another general equation can be derived:

The following assumptions are made:

(1) 1 pound bark generates 90.3 SDCF of dry gas at 0% excess air when combusted.

(2) 1 ft^3 of feed gas generates 9.1 SDCF gas at 0% excess air when combusted.

(3) Heating value of gas is 1050 Btu/ft^3.

The following variables are measured or are the result of measurements:

(1) Gas flow rate = G in ft^3/m

(2) V_s = stack gas flow in SDCFM

(3) f_{EA} = Excess air correction to adjust V_s to 0% oxygen content =

$$\frac{20.9}{20.9 - \%\ O_2 \text{ content in flue gas}}$$

(4) K = A variable defined as:

$$\frac{\text{measured heat content of bark}}{8900}$$

By definition:

$$H_I - H_{I\text{-}gas} + H_{I\text{-}bark} \qquad \text{(Eq 15)}$$

where

$$H_{I\text{-}gas} = 1050 \text{ Btu/ft}^3 \text{ X G X 60} = 63{,}000 \text{ G Btu/hr} \qquad \text{(Eq 16)}$$

$$H_{I\text{-}bark} = \text{K X 8900 X B} \qquad \text{(Eq 8)}$$

The bark flow rate is:

$$B = \frac{\left(\frac{V_s}{f_{EA}} - \begin{matrix}\text{Gas volume from}\\ \text{gas combustion}\end{matrix}\right) \text{ X 60 min/hr}}{\text{90.3 SDCF/lb}}$$

The gas volume from gas combustion is 9.1 G SDCFM

Substituting into equation 17:

$$B = \frac{60\left(\frac{V_s}{f_{EA}} - 9.1G\right)}{90.3}$$

Rearranging:

$$H_{I\text{-}bark} = \frac{8900K\left(\frac{V_s}{f_{EA}} - 0.16\right) 60}{90.3} = \frac{5913K\ V_s}{f_{EA}} - 53800\ K\ G \qquad \text{(Eq 1}$$

Since the effect of K is small in the second part of the equation it can be assumed to be 1 and the equation can be simplified to:

$$H_{I\text{-}bark} = \frac{5913\ K\ V_s\ (20.9 - \%\ O_2) - 53800\ G}{20.9} \qquad \text{(Eq 1}$$

which is in the same form as equation 5.

The variability in ultimate analysis and heat content of gas limits the use of this general equation but does not preclude the development of a similar expression to fit the case at hand.

IX SUMMARY

(1) The potential errors in estimating heat input to a boiler when fuel is not weighed or measured have been outlined and the limitations of estimating heat input from measured steam production rates and steam characteristics emphasized.

(2) For those situations where wood derived fuel is not weighed before burning an estimating procedure which is based on measurement of the volume of the dry products of combustion and relating this measurement to the composition and heating value of the fuel was developed.

(3) The estimating procedure is (a) independent of fuel moisture content, and (b) suitable for use where wood derived fuel is burned separately or in conjunction with other fuels (if the feed rate of other fuels is measured).

(4) The procedure depends on two measurments commonly made during source particulate sampling, namely (a) stack gas volume and (b) oxygen content of the flue gas (as frequently as every 5 to 10 minutes during the sampling period).

(5) The procedure depends on a knowledge of heating value of the fuel or fuels burned and can be further refined if an ultimate analysis of the fuel or fuels is known. This would permit adjustment of the numerical constants in the general equation for estimating heat input which reflect ultimate analysis of typical fuels. The flue gas volume change associated with the minor differences in published ultimate analysis of oil and wood derived fuel sources shows this to be of minor importance in arriving at a rational estimate of heat input. Care must be used in assuming a typical ultimate analysis for natural gas however.

(6) A method of estimating emission rates from power plants burning a single fossil fuel or gas is included in the Appendix. The procedure is applicable where only one fuel is burned and does not appear to have application where wood derived fuel alone is burned unless it can consistently be demonstrated that the flue gas volume and fuel heating value relationship is consistent. Information available at this time shows that a wider range of heating value for wood derived fuels of reasonably uniform ultimate analysis indicates this will not be the case.

X LITERATURE REFERENCES

1. Federal Register, Standards of Performance for New Stationary Sources, 36:247, Part II (Dec. 23, 1971).

2. Combustion Engineering, 1st ed., Combustion Engineering, Inc., New York, New York (1967).

3. Perry, R.H., and Chilton, C.H., Chemical Engineers' Handbook, 5th ed., McGraw-Hill Book Co., New York, New York (1973).

4. Corder, S.E., "Wood and Bark as Fuel," Oregon State Forest Research Laboratory, Corvallis Research Bulletin 14, (Aug. 1973).

5. Koch, Peter, and Mullen, J.F., "Bark from Southern Pine May Find Use as Fuel." Forest Industries 98 (4): 36-37, April, 1971.

6. Hodgman, Charles D., ed., Handbook of Chemistry and Physics, 43rd ed., 1936 Chemical Rubber Publishing Co., Cleveland (1961).

7. Millikin, D.E., "Determination of Bark Volumes and Fuel Properties," Pulp and Paper Magazine of Canada 56(13): pp. 106-108 (Dec. 1955).

*U.S. GOVERNMENT PRINTING OFFICE: 1978 260-880/3 1-3