United States
Environmental Protection
Agency

Office of Air Quality
Planning and Standards
Washinton, D.C. 20460

EPA-340/1-90-001
July 1990

Stationary Source Compliance Series

EPA

Benzene Equipment Leak Inspection Manual

Printed on Recycled Paper

DISCLAIMER

This manual was prepared by Engineering-Science, Inc. for the Stationary Source Compliance Division of the U.S. Environmental Protection Agency. It has been completed in accordance with EPA Contract No. 68-02-4462, Work Assignment No. 69. The contents of this report are reproduced herein as received from the contractor. The opinions, findings, and conclusions expressed are those of the authors and not necessarily those of the U.S. Environmental Protection Agency. Any mention of product names does not constitute endorsement by the U.S. Environmental Protection Agency.

The safety precautions set forth in this manual and presented at any training or orientation session, seminar, or other presentation using this manual are general in nature. The precise safety precautions required for any given situation depend upon and must be tailored to the specific circumstances. Engineering-Science, Inc. expressly disclaim any liability for any personal injuries, death, property damage, or economic loss arising from any actions taken in reliance upon this manual or any training or orientation session, seminar, or other presentations based upon this manual.

TABLE OF CONTENTS

1. INTRODUCTION 1-1

2. REGULATORY REQUIREMENTS 2-1

2.1 Introduction 2-1

2.2 Regulatory Requirements 2-2

2.2.1 Applicability Determinations 2-2

2.2.2 Exemptions 2-3

2.2.3 Compliance Monitoring Requirements 2-4

2.2.3.1 Valves 2-5

2.2.3.2 Pumps 2-12

2.2.3.3 Compressors 2-14

2.2.3.4 Sampling Connections 2-14

2.2.3.5 Pressure Relief Devices and Connectors 2-14

2.2.3.6 Open-Ended Valves 2-15

2.2.3.7 Product Accumulator Vessels 2-15

2.2.3.8 Closed-Vent Systems 2-15

2.2.3.9 Control Devices 2-16

2.2.4 Alternatives for Emission Limitation 2-17

2.2.5 Leak Repair and Records 2-17

2.2.5.1 Leak Repair 2-17

2.2.5.2 Leak Records 2-19

2.2.6 Facility Reporting Requirements 2-21

3. FUGITIVE BENZENE EMISSION SOURCES 3-1

3.1 Process Valves 3-1

3.1.1 Gate Valves 3-2

3.1.2 Globe Valves 3-2

3.1.3 Angle Valves 3-5

3.1.4 Diaphragm Valves 3-5
3.1.5 Ball Valves 3-5
3.1.6 Butterfly Valves 3-8
3.1.7 Valve Seals and Leak Sources 3-8

3.2 Pumps 3-12

3.2.1 Centrifugal Pumps 3-12
3.2.2 Reciprocating Pumps 3-12
3.2.3 Rotary Pumps 3-14
3.2.4 Canned Motor Pumps 3-14
3.2.5 Pump Seals and Leak Sources 3-19

3.3 Compressors 3-22

3.3.1 Compressor Types 3-22
3.3.2 Compressor Seals and Leak Sources 3-22

3.4 Pressure Relief Devices 3-23

3.4.1 Types of Pressure Relief Devices 3-23
3.4.2 Emissions Sources 3-27

3.5 Sampling Connections System 3-27
3.6 Open-ended Valves and Lines 3-27
3.7 Product Accumulator Vessels 3-28
3.8 Flanges and Other Connectors 3-28
3.9 Closed Vent Systems and Control Devices 3-29

4. INSTRUMENTATION SELECTION AND OPERATION 4-1

4.1 VOC Detectors 4-1

4.1.1 Flame Ionization Detector (FID) 4-4
4.1.2 Photoionization Detector (PID) 4-4
4.1.3 Nondispersive Infrared Detector (NDIR) 4-6
4.1.4 Catalytic Combustion 4-7

4.2 Selection of Instruments 4-7

4.2.1 Detector Response and Selectivity 4-7
4.2.2 Range and Accuracy 4-8

4.2.3 Ease-of-Use 4-8
4.2.4 Safety 4-8

4.3 Instrument Calibration and Evaluation 4-10

4.3.1 Instrument Calibration Requirements and Procedures 4-10
4.3.2 Field Span Check Procedures 4-12

4.4 Instrument Maintenance Programs and Records 4-14

4.5 Instrument Performance Checks 4-15

4.5.1 Leak Checks 4-15
4.5.2 Probe Condition 4-16
4.5.3 Battery Pack Status Checks 4-17
4.5.4 Detector Condition 4-18
4.5.5 Spare Parts and Supplies 4-18

4.6 Field Checks 4-19

4.6.1 Instrument Zero 4-19
4.6.2 Instrument Response 4-19
4.6.3 Battery Condition 4-20
4.6.4 Probe/Sampling Line Leakage 4-20

4.7 Quality Assurance 4-21

5 PRE-INSPECTION 5-1

5.1 Facility Background Information Review 5-1

5.1.1 General Facility Background Information 5-2
5.1.2 Inspection Reports 5-2
5.1.3 Legal Records 5-3
5.1.4 Information Sources 5-3
5.1.5 Review of Reports 5-4

5.2 Development of the Inspection Plan 5-6

5.2.1 Plant Records 5-6
5.2.2 Inspection Monitoring 5-6

5.3 Notification 5-8

5.4 Monitoring Equipment 5-10

5.5 Safety 5-11

5.6 Reference Material 5-11

6 INSPECTIONS 6-1

6.1 Safety 6-1

6.2 Inspector's Responsibilities 6-3

6.2.1 Legal Responsibilities 6-3

6.2.2 Procedural Responsibilities 6-4

6.3 Facility Inspections 6-4

6.3.1 Entry 6-5

6.3.1.1 Arrival 6-5

6.3.1.2 Consent 6-5

6.3.2 Initial Interview 6-5

6.3.3 Evaluating the Facility Leak Monitoring Program 6-7

6.3.3.1 Observation of Calibration Procedures 6-7

6.3.3.2 Observing Leak Detection Monitoring by Plant Personnel 6-8

6.3.3.3 Spot-Check by Inspector 6-10

6.3.4 Record Inspections 6-15

6.3.5 Closing Conference 6-23

7 POST INSPECTION 7-1

7.1 Writing The Report 7-1

7.1.1 Introduction 7-2

7.1.2 Compliance Status for Regulated Equipment 7-2

7.1.2.1 Individual Source Compliance Status 7-3

7.1.2.2 Exemptions 7-4

7.1.2.3 Alternative Standards 7-4

7.1.2.4 Leak Detection Procedures 7-4

7.1.2.5 Reports and Recordkeeping 7-5

7.1.3 Data 7-5

7.1.4 Summary 7-5

7.2 Handling Confidential Business Information 7-6

8 REFERENCES 8-1

LIST OF FIGURES

FIGURE		PAGE
3-1	Gate Valve	3-3
3-2	Globe Valve with Packed Seal	3-4
3-3	Diaphragm Valve	3-6
3-4	Ball Valve	3-7
3-5	Butterfly Valve	3-9
3-6	Simple Packed Seal	3-10
3-7	Sealed Bellows Valve	3-11
3-8	Two-Stage Pump with Double-Suction Impellers	3-13
3-9	Shriver Mechanically Actuated Diaphragm Pump	3-15
3-10	Moyno Single-Rotor Screw Pump with Elastomeric Lining	3-16
3-11	Gear-Type Rotary Pump Having Two Impellers	3-17
3-12	Seal-less Canned Motor Pump	3-18
3-13	Basic Single Mechanical Seal and Double Mechanical Seal	3-21
3-14	Liquid-Film Compressor Shaft Seal	3-24
3-15	Diagram of a Spring-Loaded Safety/Relief Valve	3-25
5-1	Benzene NESHAP Inspection Preparation Checklist for Initial Reports	5-5
5-2	Benzene NESHAP Inspection Preparation Checklist for Semiannual Reports	5-7
5-3	Monitoring Survey Log Sheet	5-9
6-1	Facility Leak Monitoring Program Checklist	6-11
6-2	Equipment and Leak Identification Checklist	6-13
6-3	In-Plant Records Checklist	6-16
6-4	Control Device Checklist	6-21

LIST OF TABLES

TABLE		PAGE
2-1	Summary of Leak Detection Standards and Equipment Standards	2-6
4-1	Performance Comparison of Four Major VOC Detectors	4-2
4-2	Most Common Portable VOC Detection Instruments	4-5
4-3	Ease-of-Use of Organic Vapor Analyzers	4-9

1.0 INTRODUCTION

The Environmental Protection Agency (EPA) established regulations concerning the monitoring of benzene fugitive emissions on June 6, 1984. Promulgation of benzene emission standards resulted from the EPA determination that benzene presents a significant carcinogenic risk to human health and is therefore, a hazardous pollutant as defined in Section 112 of the Clean Air Act. The national standards limit fugitive emissions of benzene from existing and new petroleum refining and chemical manufacturing units. It covers equipment in these units that contain materials having a benzene concentration of 10 percent or more by weight. Equipment which must conform to the benzene standards includes: valves, pumps, compressors, pressure relief devices, sampling connection systems, open-ended valves or lines, flanges, product accumulator vessels, closed vent systems and control devices.

The EPA regional, state and local compliance inspectors are charged with the responsibility to determine the compliance of the regulated facilities with the standards. In order to insure uniform enforcement of the standard, guidance procedures must be established and adopted. Recognizing this need, the EPA Stationary Source Compliance Division has developed this manual which compiles the needed procedures.

This manual is intended to provide basic guidance to enable the inspector to systematically and comprehensively gather the information and conduct the benzene inspections required to determine a facility's compliance with the benzene National Emission Standards for Hazardous Pollutants (NESHAP) regulations. The manual is divided into seven chapters including the introduction. The second chapter covers the benzene NESHAP regulations presented in 40 CFR 61 Subpart A, J and V which establish the legal premise for determining facility compliance. The various types of equipment subject to the NESHAP regulations are described and the specific leak areas of each type are covered in Chapter 3. Chapter 4 presents the selection and use of various Volatile Organic Compound (VOC) leak detection equipment specified for determining compliance as well as the calibration and maintenance procedures. The preparation required for an organized and efficient facility inspection is detailed in Chapter 5. Chapter 6 covers the

inspection procedures including the record review and leak detection monitoring. The post-inspection facility compliance determination, reporting and confidential business information procedures are presented in Chapter 7.

2.0 REGULATORY REQUIREMENTS

2.1 INTRODUCTION

On January 5, 1981, the Environmental Protection Agency (EPA) proposed the national emission standard for fugitive benzene emissions (46 FR 1165) under authority of Section 112 of the Clean Air Act. The purpose of the standard is to reduce benzene emissions from fugitive emission sources. Fugitive emissions of benzene can be reduced by two types of control techniques: (1) leak detection and repair programs, and (2) equipment design and operational specifications. The leak detection and repair programs consist of monitoring potential fugitive benzene emission sources with the approved portable VOC detection instruments and then repairing or replacing any source determined to be leaking. The repairs or replacement must be completed within a specified time after discovery depending on the source, and the ability to make repairs without a process shutdown. Fugitive benzene emissions could also be reduced by installing certain control equipment. For example, fugitive emission from pumps occur primarily at the pump seal. These emissions could be reduced by installing the following equipment: sealless pumps, pumps with dual mechanical seals, or closed vent systems and control devices for collection and removal or destruction of emissions. However, because of process condition limitations, installation of control equipment is not suitable for all pump applications. Therefore, the standard requires a combination of monthly monitoring and the installation of specific control equipment to provide the greatest level of control for fugitive benzene emissions.

This chapter describes the regulatory requirements, applicability determinations, exemptions, compliance monitoring methods, alternate test methods, waivers, leak repair, recordkeeping and reporting procedures stipulated by the fugitive benzene emission regulations. A thorough understanding of the fugitive benzene emission regulation is a prerequisite before the inspector can begin an inspection. The objective of this chapter is to assist the inspector in acquiring this understanding by providing an explanation of the regulations.

2.2 REGULATORY REQUIREMENTS

Benzene emissions are regulated by the National Emission Standards for Hazardous Air Pollutants (NESHAP) found in Title 40 Part 61 of the Code of Federal Regulations (CFR), Subparts A, J, and V. Subpart A gives the general provision of the regulations. Subpart J outlines the specific standards for benzene equipment leaks, and requires that affected sources must meet the general requirements of Subpart V. Subpart V covers in detail all of the compliance regulations for equipment leaks. Subpart V is generic, or common, to all volatile hazardous air pollutants (VHAP) that have been or will be made subject to Subpart V.

2.2.1 Applicability Determinations

It is important to understand exactly what types of facilities may be subject to the benzene NESHAP, since any potential subject facility which claims exemption from the benzene standard is required to keep records which document that the exemption is valid (40 CFR 61.110 (c) (1) and 40 CFR 61.246 (i)). Presented below is a list of some of the types of facilities are potentially subject to the benzene NESHAP.

(1) Benzene Sulfonic Acid Production

(2) Benzene and/or Toluene and/or Xylene Production

(3) Chlorobenzene Production

(4) Cumene Production

(5) Cyclohexane Production

(6) Ethanol Production where benzene is used as an azeotropic distillation solvent

(7) Ethylbenzene Production

(8) Hydroquinone Production

(9) Linear Alkylbenzene Production

(10) Maleic Anhydride Production

(11) Nitrobenzene Production

(12) Petroleum Refineries

(13) Pipeline Companies and Storage Terminals

(14) Polymer Production where benzene is used as a solvent

(15) Resorcinol Production

(16) Styrene Production

(17) Phenylsilicone Production

The standard covers new and existing valves, pumps, compressors, pressure relief devices, sampling connection systems, open-ended valves or lines, flanges and other connectors, product accumulator vessels, and control devices or systems used to comply with the standard. To be covered by the regulations, the equipment must be "in benzene service" i.e., it must contain or contact a fluid (liquid or gas) with a benzene concentration of 10 percent or more by weight. All equipment "in benzene service" must be identified or marked in a permanent manner easily distinguishable for leak monitoring purposes. The two most common methods for marking or identifing subject equipment are tagging or painting.

2.2.2 Exemptions

Facilities are exempt from Subparts J and V requirements if:

- plant site is designed to produce or use less than 1000 Megagrams of benzene per year (1,100 tons per year).
- facility processes, through equipment, liquid or gaseous streams which contain less than 10 weight percent benzene.
- Sources located in coke by-product plants (these sources are covered by other regulations).

In regards to the first exemption, EPA selected a minimum cut-off of 1,000 Megagrams per year or the equivalent of 1,100 tons per year per plant site based on the

benzene design production or usage rate. EPA interprets "produce or use" to include throughput. Throughput is determined by a mass balance made during the design stages of the process operations and incorporates the accumulation of all benzene processed in one year.

The regulations which govern the second exemption stipulate that each piece of equipment within a process unit that can conceivably contain equipment in benzene service is presumed to be in benzene service unless an owner or operator demonstrates that the piece of equipment is not in benzene service. In order to determine that a piece of equipment is not in benzene service, it must be determined that the percent benzene content can be reasonably expected never to exceed 10 percent by weight. To demonstrate that the percent benzene content does not exceed 10 percent by weight, the owner or operator must use the methods described in ASTM Method D-2267. Alternatively, if agreed upon by the Administrator, the owner or operator may use engineering judgement provided it clearly demonstrates the benzene content doesn't exceed 10 percent by weight.

Additional exemptions are allowed for:

- Storage Tanks - regulations do not apply to tank breathing loss, however, associated pumps, valves and connectors may be subject.
- Welded fittings - no number or identification is required, however, if a leak is detected, it must be corrected.
- Vacuum Service - regulations only apply to equipment continuously operating at an internal pressure which is at least 5 kilopascals (20 inches of water) below ambient pressure, or at a minimum gauge vacuum of 20 inches of water (1.48 inches of mercury).

2.2.3 Compliance Monitoring Requirements

The benzene NESHAP emission standards require that fugitive emissions sources be monitored at specific schedules and after every leak repair to determine compliance. Reference Method 21, in the New Source Performance Standards, 40 CFR Part 60, Appendix A, was designated by the EPA as the acceptable technical method to determine benzene leak from these sources. Method 21 stipulates the specifications and performance

requirements which the portable VOC monitors must meet. There are several instruments available on the market that may be used for compliance monitoring. Chapter 4 covers the advantages and disadvantages of the different types.

The benzene standards places specific limits on fugitive emissions from valves, pumps, compressors, pressure-relief devices, sampling connection systems, open-ended valves or lines, flanges and other connectors, product accumulator vessels and control devices or systems. Two control techniques are employed by the standard to achieve reduction of benzene fugitive emissions. The first control method is a leak detection and repair program in which fugitive source leaks are located and repaired at regular intervals. The second control method is a preventative program in which potential fugitive sources are eliminated by either retrofitting with specified controls or replacement with leakless equipment. Specific monitoring or control equipment requirements for the equipment items subject to the benzene standard are described in the following paragraphs. A summary of these requirements is presented in Table 2.1.

2.2.3.1 Valves

Valves in gas or liquid service must be monitored monthly in compliance with the leak detection and repair program. A leak is described as a reading of 10,000 ppm or greater of benzene material. Any valve found not to be leaking for two consecutive months may switch to quarterly monitoring. If a leak is detected, the valve shall be monitored monthly until a leak is not detected for two consecutive months.

Valves must be monitored monthly to detect leaks unless:

- the valve is designated as a difficult-to-monitor valve
- the valve is designated as an unsafe-to-monitor valve
- the valve is designated for no detectable emissions

TABLE 2-1

SUMMARY OF LEAK DETECTION STANDARDS AND EQUIPMENT STANDARDS

Equipment Item	Equipment Type/Category	Standard	Comments
Valves	General	Monthly Method 21 test	Leak = 10,000 ppm or greater (If two successive months have no leaks then valve can be monitored quarterly)
	With no external actuating mechanism in contact with process fluid	No detectable emissions	Leak = 500 ppm above background Annual test
	In unsafe location		Owner to have written monitoring plan
	In difficult to monitor location (existing plants ONLY)	Minimum of annual Method 21 test	Owner to have written monitoring plan
Pumps	General	Weekly visual check AND Monthly leak detection	Leak = any liquid drips OR 10,000 ppm or greater

TABLE 2-1 (CONTINUED)

Equipment Item	Equipment Type/Category	Standard	Comments
Pumps (continued)	With dual mechanical seals and barrier fluid system	Weekly visual check	Pressure of barrier fluid greater than pressure of benzene fluid OR Degassing reservoir with controls OR Purge into process stream AND Barrier fluid not in VHAP service AND Sensor for failure (checked daily or has audible alarm) Leak = failure of seal OR Any liquid drips
	With no external shaft	No detectable emissions	Leak = 500 ppm above background Annual Method 21 test
	With closed-vent system		Must comply with closed-vent requirements
	Located at unmanned plant site	Minimum of monthly visual check and leak detection	Exempt from weekly and daily checks (leaks and/or sensor/alarm)
Compressor	General	No detectable emissions	Leak = 500 ppm above background Annual Method 21 test

TABLE 2-1 (CONTINUED)

Equipment Item	Equipment Type/Category	Standard	Comments
Compressor (continued)	Closed-Vent System		Must comply with closed-vent requirement
	Unmanned Plant Site	Minimum of monthly visual check and leak detection	Exempt from daily sensor/ alarm check
	Barrier Fluid Seal System		Pressure of barrier fluid greater than pressure of benzene fluid OR Barrier fluid vented to controls OR Purge into process stream AND Barrier fluid not in VHAP service AND Sensor for failure (checked daily or has audible alarm) AND Plant to establish criterion for leak Leak = criterion is exceeded
Sampling Connections	Closed Purge or Closed-Vent System		Return purge to process stream OR Collect and recycle purge OR Vent to control system and meet closed-vent requirements
	In-Situ	Exempt	
Product Accumulator	Closed-Vent System		Must comply with closed-vent requirements

TABLE 2-1 (CONTINUED)

Equipment Item	Equipment Type/Category	Standard	Comments
Closed-Vent Systems	Closed-Vents	No detectable emissions	Annual Method 21 test Leak = 500 ppm above background OR by visual detection
	Control devices	Monitor	Ensure operating per design
	Vapor recovery systems	95% Efficiency	
	Enclosed combustion devices	95% Efficiency 0.5 Seconds 1400°F	
	Flares	No Visible Emissions (except 5 mins/2 hour period) Flame Present Detector BTU Requirements Velocity Requirements	By Method 22 test
Open-Ended Valve and Lines	Must have cap, blind flange, plug or second valve		Shall be closed except during operation AND Second valve shall be shut first (double block and bleed valve can be open during venting but must be closed at other times)
Pressure Relief in Liquid Service, Flanges and Other Connections	General	No scheduled detection	Potential Leak = Visual, Audible, Olfactory, etc. AND Leak = 10,000 ppm or greater

TABLE 2-1 (CONTINUED)

Equipment Item	Equipment Type/Category	Standard	Comments
Pressure Relief in Gas/ Vapor Service	General	No Detectable Emissions	Leak = 500 ppm above background AND Method 21 test within 5 Days of a Release
	Closed-vent system		Must comply with closed-vent requirements

Valves designated as difficult to monitor are those which require elevating the monitoring personnel more than two meters above any permanent available support surface. Valves that cannot be safely monitored by the use of step ladders are also classified as difficult to monitor. For valves designated as difficult to monitor, an annual leak detection and repair program must be developed and followed. The description of this program must be kept in a readily accessible location.

Valves defined as unsafe to monitor are those that could, as demonstrated by the owner or operator, expose monitoring personnel to imminent hazards from temperature, pressure, or explosive process conditions. For valves designated as unsafe to monitor, an owner or operator is required to develop and follow a plan that defines a leak detection and repair program conforming with the routine monitoring requirements of the standard as much as possible, with the understanding that monitoring should not occur during unsafe conditions. There should be very few valves in benzene service that are unsafe to monitor.

Valves designated for no detectable emission must comply with the following equipment standards:

- Have no external actuating mechanism in contact with the process fluid
- Be operated with emissions less than 500 ppm
- Leak tested initially upon designation and annually

The benzene NESHAP standard allows alternatives to the valve standard described above. The owner or operator may elect to choose one of two alternative standards for valves in gas/vapor and liquid service. Both of these alternatives require one year of monthly monitoring to obtain data on which to base the alternative standard. An owner or operator selecting to comply with the provisions of either of these options must notify the Administrator 90 days before implementing the option.

The first alternative standard specifies that the percentage of leaking valves must be two percent or less within a process unit, as determined by the initial performance test and a minimum of one performance test annually thereafter. This alternative may be met by implementing any type of monitoring program and engineering controls chosen at the discretion of the owner or operator. Whenever the percentage of valves leaking is greater

than two percent, the process unit is in violation. If at any time, the owners or operators decide they no longer wish to comply with this alternative, they must submit a written notice to EPA accepting compliance with the monthly/quarterly leak detection and repair programs.

The second alternative standard specifies two skip period leak detection and repair programs. Under this alternative option, an owner or operator after notifying EPA, can skip from monthly/quarterly monitoring to a less frequent monitoring schedule, after completing a specified number of consecutive monitoring intervals with the percentage of valves leaking equal to or less than two percent. Under the first program, the owner or operator may skip to semiannual monitoring after two consecutive quarterly periods with fewer than two percent of valves leaking. Under the second program, the owner or operator may skip to annual monitoring after 5 consecutive quarterly periods with fewer than two percent of valves leaking. However, the owner or operator may not adopt semiannual monitoring and then proceed directly to annual monitoring by claiming one period of semiannual monitoring substitutes for two quarterly leak detection and repair. If the owner or operator exceeds the two percent level, the monthly/quarterly leak detection and repair program must be reinstated. However, if EPA determines that the two percent level is exceeded, an evaluation of compliance should occur.

2.2.3.2 Pumps

Pumps are required to comply with the monthly leak detection and repair program, where any leak emission over 10,000 ppm is defined as a leak. They must also be visually inspected weekly for any liquid drips. However, any pump which is located within the boundary of an unmanned plant site is exempt from the weekly visual pump seal inspection requirements [40 CFR 61.242-2(a)(2) and (d)(2)] and the daily sensor inspection requirements [40 CFR 61.242-2(d)(5)(i)] as long as each pump is visually inspected as often as practicable and at least monthly.

Alternatively, pumps may comply with the NESHAP standard by meeting the equipment specifications standards. To comply with the equipment standard, pumps must be equipped with dual mechanical seals and a barrier fluid system as specified in 40 CFR

61.242-2 (d) or designated for no detectable emission or equipped with a closed-vent system.

To be in compliance with the dual mechanical seal and barrier fluid system the following five contingencies must be satisfied.

1) Each mechanical seal must:

   (a) be operated with the barrier fluid at a pressure that is at all times greater than the pump stuffing box pressure;

   -or-

   (b) be equipped with a barrier fluid degassing reservoir that is connected by a closed-vent system to a control device that complies with the requirements of 40 CFR 61.242-11;

   -or-

   (c) be equipped with a system that purges the barrier fluid into a process stream with zero VHAP emission to atmosphere.

2) The barrier fluid must not be in VHAP service.

3) Each barrier fluid system must be equipped with a sensor that will detect failure of the seal system, the barrier fluid system or both.

4) Each pump must be visually inspected for leaks dripping from the pump seal.

5) Each sensor must be checked daily or equipped with an audible alarm. A leak is detected if there are indications of liquids dripping from the pump seal or the sensor indicates failure of the seal system the barrier fluid system or both.

Pumps must be monitored monthly unless:

- the pump is equipped with a dual mechanical seal system
- the pump is designated for no detectable emission
- the pump is equipped with a closed-vent system capable of capturing and transporting any leakage from the seal or seals to a control device that complies with the requirements.

2.2.3.3 Compressors

Compressors are required by 40 CFR 61.242-3 to be equipped with a seal system that includes a barrier fluid system and that prevents leakage of process fluid to the atmosphere. The barrier fluid system must be equipped with a sensor that will detect failure of the seal or barrier fluid system. Sensors must be checked daily or have an alarm. If the sensor detects a failure, a leak is discovered. Compressors are to be tested annually unless equipped with a closed-vent system capable of capturing and transporting any leakage from the seal to a control device that complies with the applicable requirements. However, it should be noted that compressors are rarely "in benzene service" because pure benzene is not easily compressed.

2.2.3.4 Sampling Connections

Sampling connection systems allow analysis of feedstock, intermediate or product streams to test product quality and process unit operation. To obtain representative samples for the analysis, sampling lines are generally purged first. If this flushing purge is not returned to the process, it could release benzene to the atmosphere. The standard requires sampling connection systems be equipped with either a closed purge system which eliminates emissions due to purging by returning the purge material directly to the process or a closed-vent system which collects any emissions released and vents them to a control device.

2.2.3.5 Pressure Relief Devices and Connectors

Pressure relief devices, in liquid service flanges and other connectors are excluded from routine leak detection and repair requirements. However, if any evidence of a potential leak is discovered by visual, audible, olfactory or any other detection method, (in inspector vernacular, that means seen, heard, smelled or otherwise detected) these devices must be monitored for leaks within 5 calendar days. If a leak is detected, the facility must make the first attempt at repair within 5 calendar days and must complete the repairs within 15 calendar days.

Pressure relief devices in gas or vapor service shall be operated in accordance with the no detectable emission standard (<500ppm). As an alternative, compliance may be

achieved by use of a closed-vent system capable of capturing and transporting leakage from the pressure relief device to a control device, such as a flare. The standard does not apply to the emissions discharged to relieve overpressurized systems. Pressure relief devices in gas or vapor service shall be monitored within 5 days of a pressure release to confirm that the device is operating in accordance with the no detectable emission standard (<500ppm).

2.2.3.6 Open-Ended Valves

Open-ended valves or lines shall be equipped with a cap, blind flange, plug, or a second valve which shall seal the open end at all times except during operations requiring process fluid flow through the open-ended valve or line. If a second valve is used, the standard requires the upstream valve to be closed first. This will prevent trapping process fluid between the two valves.

When a double block and bleed system is used, the bleed valve or line may only remain open during operations that require venting the line between the block valves. At all other times, the double block and bleed system must remain sealed except during operations requiring process flow through the bleed valve or line.

2.2.3.7 Product Accumulator Vessels

Product Accumulator vessels shall be equipped with a closed-vent system capable of effectively capturing and transporting any leakage from the vessel to control device.

2.2.3.8 Closed - Vent Systems

Closed-vent systems shall be operated with no detectable emission and annually monitored to confirm a less than 500 ppm instrument reading. The standard also requires that closed-vent systems be checked visually to ensure there are no leaks in the piping or ducts.

2.2.3.9 Control Devices

Vapor recovery systems such as condensers and adsorbers must be designed and operated to recover the organic vapors vented to them with an efficiency of 95 percent or greater. Enclosed combustion devices, such as thermal incinerators, catalytic incinerators, boilers, or process heaters must be designed and operated to destroy benzene emissions vented to them with an efficiency of 95 percent or greater or to provide a minimum residence time of 0.50 seconds at a minimum temperature of 760°C.

As an alternative, the use of smokeless flares are allowed provided they are designed and operated according to the following requirements:

- Must be designed and operated with no visible emissions as determined by Reference Method 22, except for a total of 5 minutes in any 2-hour period.
- Must be operated with a flame present at all times. The flame's presence can be ensured by monitoring the flare's pilot light with the appropriate heat sensor such as a thermocouple, an infrared monitor or any other equivalent device.
- Only steam-assisted, air-assisted or non-assisted flares may be used to comply with the regulation. The net heating valve of the gas being combusted must be at least 300 BTU/scf for steam-assisted or air-assisted flares, and at least 200 BTU/scf for non-assisted flares.
- Steam-assisted and non-assisted flares must be designed for and operated with an exit velocity less than 60 ft/sec, except that higher exit velocities are permitted for gases having net heating values greater than 300 BTU/scf. A maximum exist velocity of 400 ft/sec is allowed when the net heating value of the gas exceeds 1,000 BTU/scf.
- For air-assisted flares, the maximum permitted velocity increases as the net heating value of the gas being combusted increases. The maximum permitted velocity is 54.5 ft/sec at the minimum allowable heating value of 300 BTU/scf, and 115.2 ft/sec at a heating value of 1,000 BTU/scf.

2.2.4 Alternatives for Emission Limitation

The owner or operator may apply for permission to use an alternative means of emission limitation under Section 112(e)(3) of the Clean Air Act. The alternative means of emission limitation may be an equipment standard, a design standard, an operational basis standard, a work practice standard or a unique approach to demonstrate emission limitation. Approval of an alternative means of emission limitation constitutes a standard setting. For this reason, only the Emission Standards Division of U.S. EPA has the authority to grant such approvals.

Each source for which the Administrator grants permission, must achieve a reduction at least equivalent to the emission reduction attained by the required controls. If the emission limitation is achieved by means of an equipment standard, design standard or operational requirement, permission may be granted on the condition that certain operation and maintenance requirements are met to assure continued compliance. If the emission limitation is achieved by means of a work practice standard, each source requesting permission must demonstrate for a minimum period of 12 months that the emission reduction is achieved. Permission may be granted on the condition that certain operation and maintenance requirements are met to assure continued compliance. The owner or operator may also offer a unique approach to demonstrate any alternative means of emission limitation. Additionally, the manufacturers of equipment used to control equipment leaks of a VHAP may request permission for an alternative means of emission limitation.

2.2.5 Leak Repair and Records.

2.2.5.1 Leak Repair

The regulations specify what initial repair action is to be taken. For valves, fugitive leaks often occur at the valve stem packing gland. The first attempt at repair may consist of:

- tightening bonnet bolts
- replacement of bonnet bolts
- tightening of packing gland nuts

- o injection of lubricant into lubricated packing
- o others

The first attempt at repair for pressure relief devices in liquid service, flanges and other connections includes the same practices as mentioned for valves.

According to the regulations, the first attempt at repair must be initiated within five calender days after discovering the leak. The leak repairs must be completed, that is, the equipment must achieve the previous emission limit standard (i.e. less than 10,000 ppm or less than 500 ppm above background reading) within 15 calendar days.

Delay of repair is allowed when the repair is technically or physically infeasible without a process unit shutdown. For example, if a leaking valve cannot be isolated from the process stream and requires complete replacement or replacement of multiple internal parts, the valve repairs can be delayed until the next process unit shut-down. Delay of repair will also be allowed if the leaking source is isolated from the process and does not contain or contact benzene in concentrations greater than 10 percent. Delay of repair for valves is allowed when:

1) the emissions of purged material resulting from immediate repair are greater than the fugitive emissions likely to result from a delay of repair,

- AND -

2) at the time of repair, benzene emissions are collected and destroyed or vented to control devices which comply with the requirements for closed-vent systems and control devices.

In addition, delay of repair beyond a process shutdown will be allowed for valves when unforeseeable circumstances deplete the supply of valves used for repair, provided that these supplies were sufficiently stocked before the ensuing depletion occurred. A delay of repair beyond the next process unit shutdown will not be allowed unless the next shutdown occurs before 6 months have elapsed after the first process unit shutdown.

Delay of repair for pumps is allowed if:

1) repair requires the use of a dual mechanical seal system that includes a barrier fluid system;

- AND -

2) repair is completed as soon as practical, but not later than 6 months after the leak is detected.

2.2.5.2 Leak Records

The standards require recording of specific information pertaining to the monthly monitoring. When a leak is detected the following information shall be recorded in a log and shall be kept for 2 years:

- Identification numbers of leaking equipment, detection instrument used, and operator who found the leak.
- Dates of leak detected, each attempt to repair the leak, process unit shutdowns while unrepaired, and successful repair.
- "Repair delayed" if the leak was not repaired within 15 calendar days after discovery, the reasons for unsuccessful repair and the date of anticipated successful repair.
- Repair methods used.
- "Above 10,000 ppm" if the maximum instrument reading after each repair attempt is above 10,000 ppm.
- Signature of owner/operator who decided to delay repair until the process shutdown.

Each source found to be leaking must be identified with a readily visible weatherproof identification bearing the source identification number. For valves, the identification may be removed only after the source has been repaired, monitored for leaks for the next two successive months and no leaks detected during those two months. For all other equipment, the identification may be removed after repair.

2.2.6 Recordkeeping Requirements

The rationale for recordkeeping is to document information about the use of specific equipment and the results of the leak detection and repair programs for determining compliance with the standard. Recordkeeping requirements are designed to require the minimum level of industrial effort necessary to ensure effective implementation of the standard. The general equipment records to be recorded in a log are to include a list of identification numbers for all equipment (except welded fittings) subject to the standards. For all equipment under the no detectable emissions designation (less than 500 ppm above background reading) the information recorded in the log must include:

- List of identification numbers of pumps, compressors and valves subject and the signature of the owner or operator.
- List of identification numbers of pressure relief devices in gas/vapor service
- Records of compliance tests for pumps, compressors, valves and pressure relief devices which include the date, background reading and maximum instrument reading measured at the equipment.

The following information pertaining to valves shall be recorded for:

- Valves designated as unsafe to monitor - the identification number, an explanation stating why the valve is unsafe to monitor and the plan for monitoring each valve.
- Valves designated as difficult to monitor - the identification number, an explanation stating why the valve is difficult to monitor and a monitoring schedule for each valve.
- Valves complying with skip period leak detection. - The monitoring schedule and the percentage of leaking valves per period.

The following information shall be recorded for closed-vent systems and control devices:

- Detailed schematics, design specifications and piping and instrumentation diagrams,
- Dates and description of any changes in the design specifications,

- Description and rationale of parameters monitored to ensure proper control device operation and maintenance,
- Periods when the closed vent systems and control device were not operated as designed,
- Periods when the pilot light did not have flame (flares),
- Dates of start-up and shut-downs of the systems.

The following information shall be recorded for each pump and compressor with dual mechanical seals and barrier fluid systems:

- The design criteria and an explanation of the design criteria.
- Any changes to this criteria and the reasons for any changes.

Facilities claiming exemptions from the benzene standards must maintain records of the following information in a log:

- Analysis of design capacity of process unit
- Analysis of equipment that is not in VHAP service
- Information and data to demonstrate that a piece of equipment is not "in benzene service."

2.2.6 Facility Reporting Requirements

Regulations require facilities to submit two types of reports to regulatory agencies. The first is an initial report and the second is a series of semiannual reports. The facility must submit an initial report within 90 days of the effective date for existing sources or new sources having an initial startup date which precedes the effective date. For new sources, the initial report must be submitted with the application for approval of construction.

Receipt of the initial report is essential for ensuring compliance with the regulations. The initial report must include a statement that the general requirements of the benzene NESHAP standards, testing, recordkeeping and reporting are being implemented. The owner or operator of each existing or new source (i.e., building, structure, facility, installation or piece of equipment which emits or may emit benzene)

which has an initial startup date preceding the effective date, must also include the following information in the initial report to be submitted within 90 days after the effective date as required under 40 CFR 61.10(a) of the NESHAP general provisions:

- Name and address of the owner or operator
- The location of the source
- The type of hazardous pollutants emitted by the stationary source
- A brief description of the nature, size, design and method of operation of the stationary source including its design capacity and identifying each point of emission for each hazardous pollutant
- The average weight per month of the hazardous materials being processed by the source, over the last 12 months preceding the date of the report.
- A description of the existing control equipment which includes each control device for each hazardous pollutant and the estimated control efficiency (percent) of each control device.
- A statement by the owner or operator as to whether the source can comply with the standards within 90 days after the effective date.

In the case of new sources which did not have an initial start up date preceding the effective date, the initial report must specify equipment identification numbers and process unit identification, equipment types, percent by weight benzene contained in the equipment fluid, state of the process fluid (vapor or liquid) and the method of compliance with the standards (monthly leak detection or equipped with dual mechanical seals) for each piece of equipment or stationary source (i.e., building, structure, facility or installation) which emits or may emit benzene. The initial report must be submitted with the application for approval of construction.

Semiannual reports contain some of the data necessary for determining substantive compliance with the benzene NESHAP standards however, the rest of such data and procedural compliance can only be determined by inspection. Semiannual reports of all pump, valve and compressor leaks detected and the leak repair efforts within a process unit are required. Leaks must be reported for each month of the reporting period, and separately for valves, pumps and compressors. The report must include the number of leaks occurring during the reporting period, the number of leaks not repaired within 15

days, an explanation of the delay of repair and the reasons why process shutdowns were infeasible. The semiannual report must contain the results of all performance tests used to determine compliance with the no detectable emissions standard and the alternative standards for valves i.e., two percent annual leakage or skip period leak monitoring requirements. Also the report must include dates of process shutdowns during the reporting period and any revisions to the initial report.

The semiannual reporting schedule should be included in the initial report. Although not specifically required, it is desirable that the schedule also report the months of monitoring included in each semiannual report. Ideally no more than 30 days should elapse between the end of a monitoring period and the report submission. All future semiannual reports must be submitted according to the schedule unless a revised schedule is submitted.

The regulations specify additional reporting requirements for changes or modifications. For example, if the owner or operator decides to meet the provisions of alternative standards for valves, the Administrator must be notified 90 days prior to execution of the new standards. Also, an application for approval of construction or modifications must be submitted unless the new source complies with the standards, the new sources are not part of the construction of a process unit, and all of the information is submitted in the next semiannual report.

3.0 FUGITIVE BENZENE EMISSION SOURCES

The purpose of this section is to identify major sources of fugitive benzene emissions which are subject to the NESHAP regulations and to explain the control devices and leak detection or prevention programs which are required to reduce or control these emissions. Typically found in petroleum refining and chemical manufacturing units, the regulated sources include; pumps, compressors, valves, sampling lines, open-ended valves, pressure relief valves, flanges and other connectors, product accumulator vessels, closed vent systems and control devices. The sources include equipment which develop leaks due to failure of seals and, if left uncontrolled, would emit benzene to the atmosphere; equipment which emits benzene during upset or intermittent operational conditions; as well as equipment which fails to adequately capture, recycle, recover or destroy benzene pollution. Although additional equipment may emit benzene pollutants, the Agency promulgated regulations for only the aforementioned sources which are deemed to pose the most significant risks to public health.

In order to control fugitive benzene emissions, the benzene NESHAP regulations require a combination leak detection and repair program and a preventive program. The leak detection and repair program seeks to limit fugitive benzene emissions from equipment sources by requiring frequent leak detection monitoring. This program focuses monitoring efforts on detecting leaks from equipment seals and other sources. Once the leak is located, repair or replacement is performed to eliminate the leak, thereby reducing fugitive benzene emissions. The preventive program seeks to prevent and thus eliminate fugitive benzene sources. Benzene emissions are eliminated by retrofitting or replacing leak sources with leakless equipment. In other applications, benzene emissions are prevented from entering the atmosphere by requiring enclosure systems for leak areas and destruction or removal of captured emissions by control devices.

3.1 PROCESS VALVES

One of the most common pieces of equipment in a refinery or organic chemical production unit is the valve. Individually, process valves have a low emission rate, but

because of the large number of valves typically used in a production unit, as a group they usually constitute the largest source of fugitive VOC emissions.

There are several types of valves, such as globe, gate, plug, ball, and check valves. These valves can be grouped into three functional categories:

- Block which are used for on/off control.
- Control which are used for flow rate control.
- Check which are used for directional control. Since these valves do not have stems (and therefore a potential leak area), they will not be covered in this manual.

The following paragraphs are intended to familiarize the inspector with the principal types of valves, describe their operating mechanisms and identify potential leak sources.

3.1.1 Gate Valves

Gate valves (Figure 3-1) are used to minimize pressure drop in the open position and to stop the flow of fluid rather than to regulate it. Gate valves are designed in two types: inclined-seat and parallel seat. The wedge-shaped gate, inclined-seat type is most commonly used. The wedge gate is usually solid but may be flexible (partly cut into halves by a plane at right angles to the pipe), or split (completely cleft by such a plane). Flexible and split wedges minimize galling (seizure at point of contact) of the sealing surfaces by distorting more easily to match angularly misaligned seats. In the double-disk, parallel-seat type, an inclined plane device mounted between the disks converts stem force to axial force, pressing the disks against the seats, after the disks are positioned for closing. This gate assembly distorts automatically to match both angular misalignment of the seats and longitudinal shrinkage of the valve body on cooling.

3.1.2 Globe Valves

Globe valves (Figure 3-2) are a type of block valve whose name arises from the shape of the body. They are designed as either inside-screw rising stem or outside-screw rising stem. Small valves generally are of the inside-screw type, while in larger sizes the

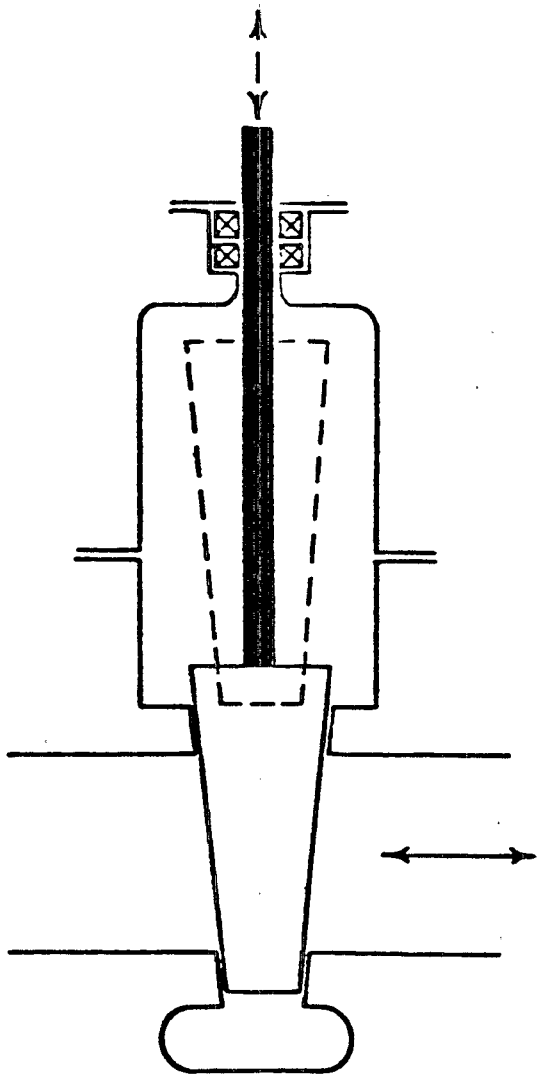

GATE VALVE[1]

FIGURE 3-1

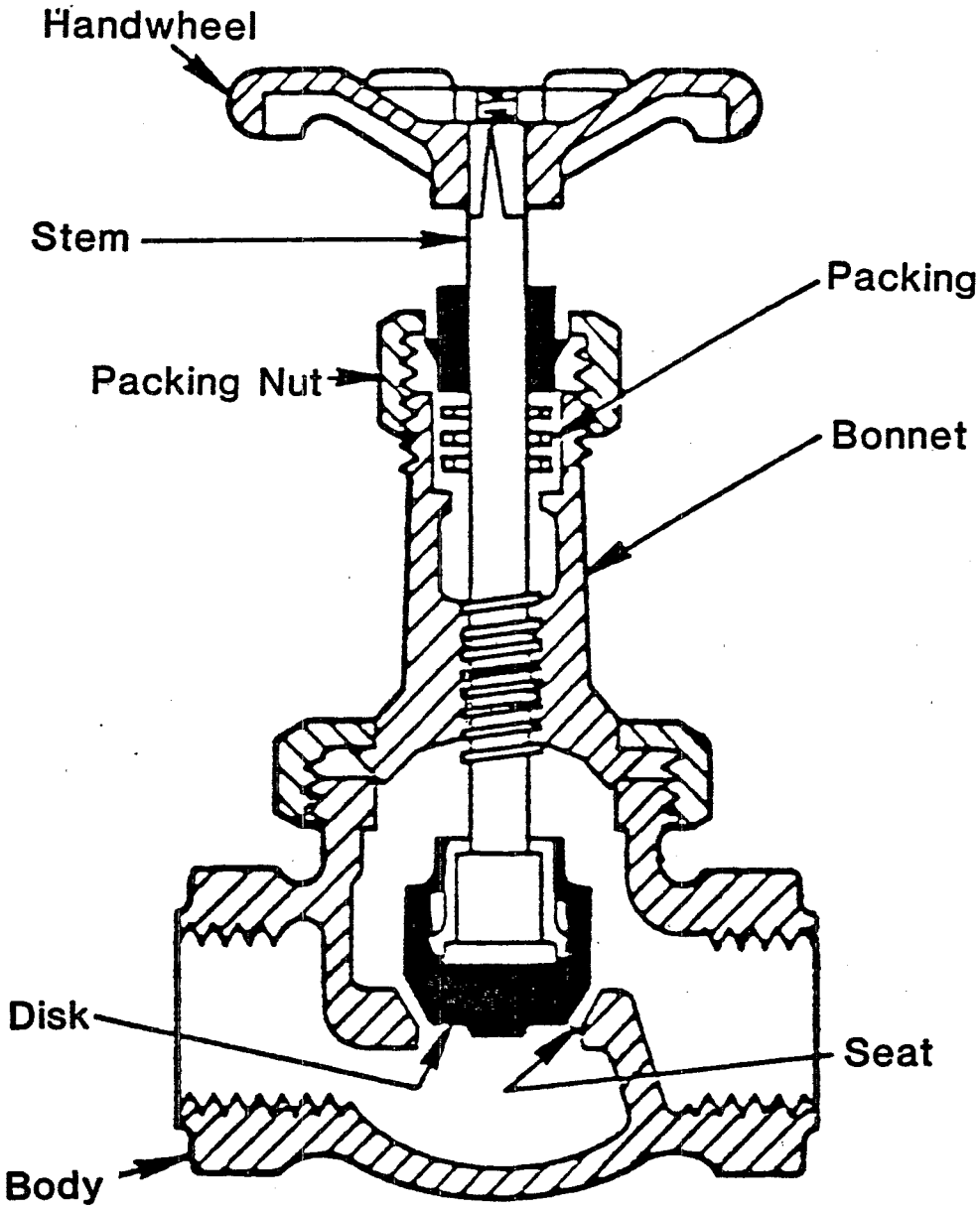

GLOBE VALVE WITH PACKED SEAL[2]

FIGURE 3-2

outside-screw type is preferred. In most designs the disks are free to rotate on the stems; this prevents galling between the disk and the seat. Globe valves are preferably installed with the higher-pressure side connected to the top of the disk. Exceptions are (1) where blocked flow caused by separation of the disk from the stem would damage equipment, or (2) where the valve is installed in seldom-used vertical drain lines in which accumulation of rust, scale, or sludge might prevent opening the valve.

3.1.3 Angle Valves

Angle valves are similar to globe valves; the same bonnet, stem, and disk are used for both. They combine an elbow fitting and a globe valve into one component with a substantial saving in pressure drop. Flanged angle valves are easier to remove and replace than flanged globe valves.

3.1.4 Diaphragm Valves

Diaphragm valves (Figure 3-3) are control valves which limit flow by manipulating a flexible diaphragm. The process fluid is separated from the valve stem by a flexible diaphragm so that the potential for leakage around the stem is eliminated. The fabric-reinforced diaphragms may be made from natural rubber, from a synthetic rubber, or from natural or synthetic rubbers faced with Teflon®. The simple shape of the body makes lining it economical. Plastic bodies, which have low moduli of elasticity compared with metals, are practical in diaphragm valves since alignment and distortion are minor problems. Diaphragm valves have excellent corrosion resistance characteristics but are limited to pressures of approximately 50 psig.

3.1.5 Ball Valves

Ball valves (Figure 3-4) as the name suggests, use a spherical element to block flow. Since the sealing element is a ball, its alignment with the axis of the stem is not essential to tight shutoff. In free-ball valves the ball is free to move axially. Pressure differential across the valve forces the ball in the closed position against the downstream seat and the latter against the body. In fixed-ball valves, the ball rotates on stem extensions, with the bearings sealed with O-rings.

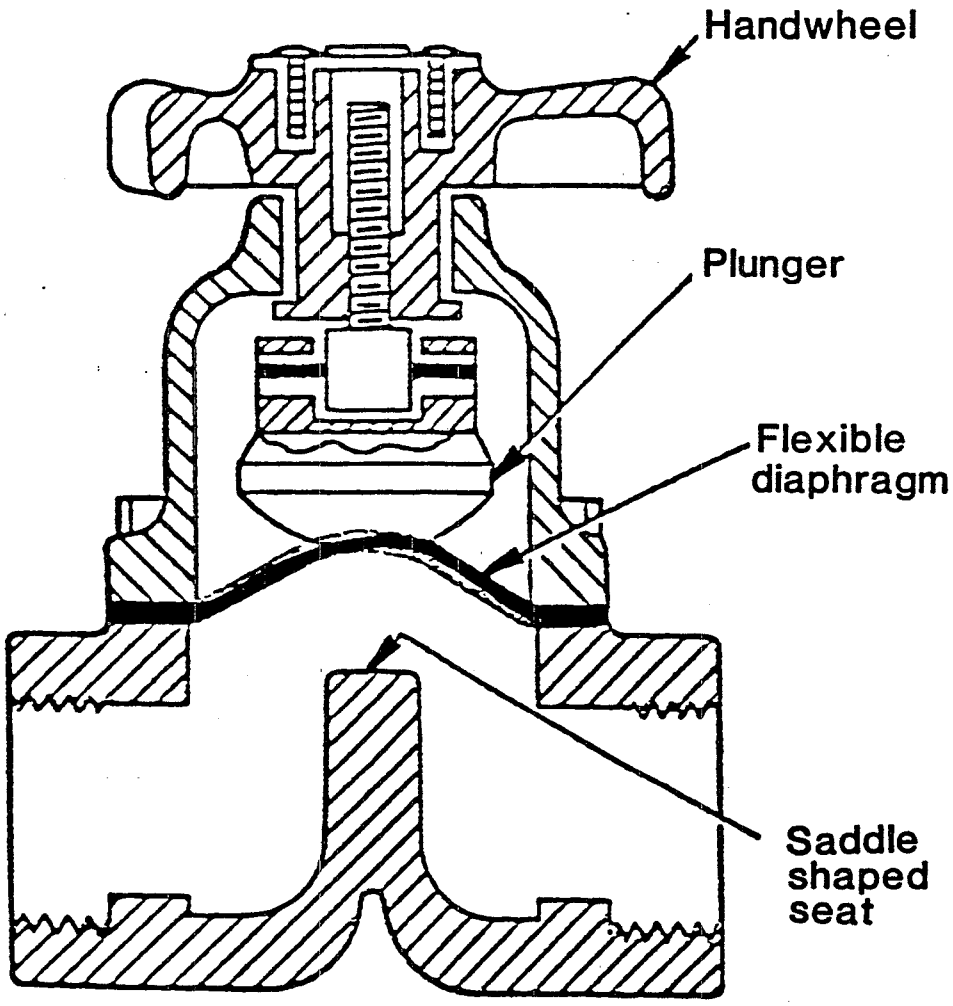

DIAPHRAGM VALVE [2]

FIGURE 3-3

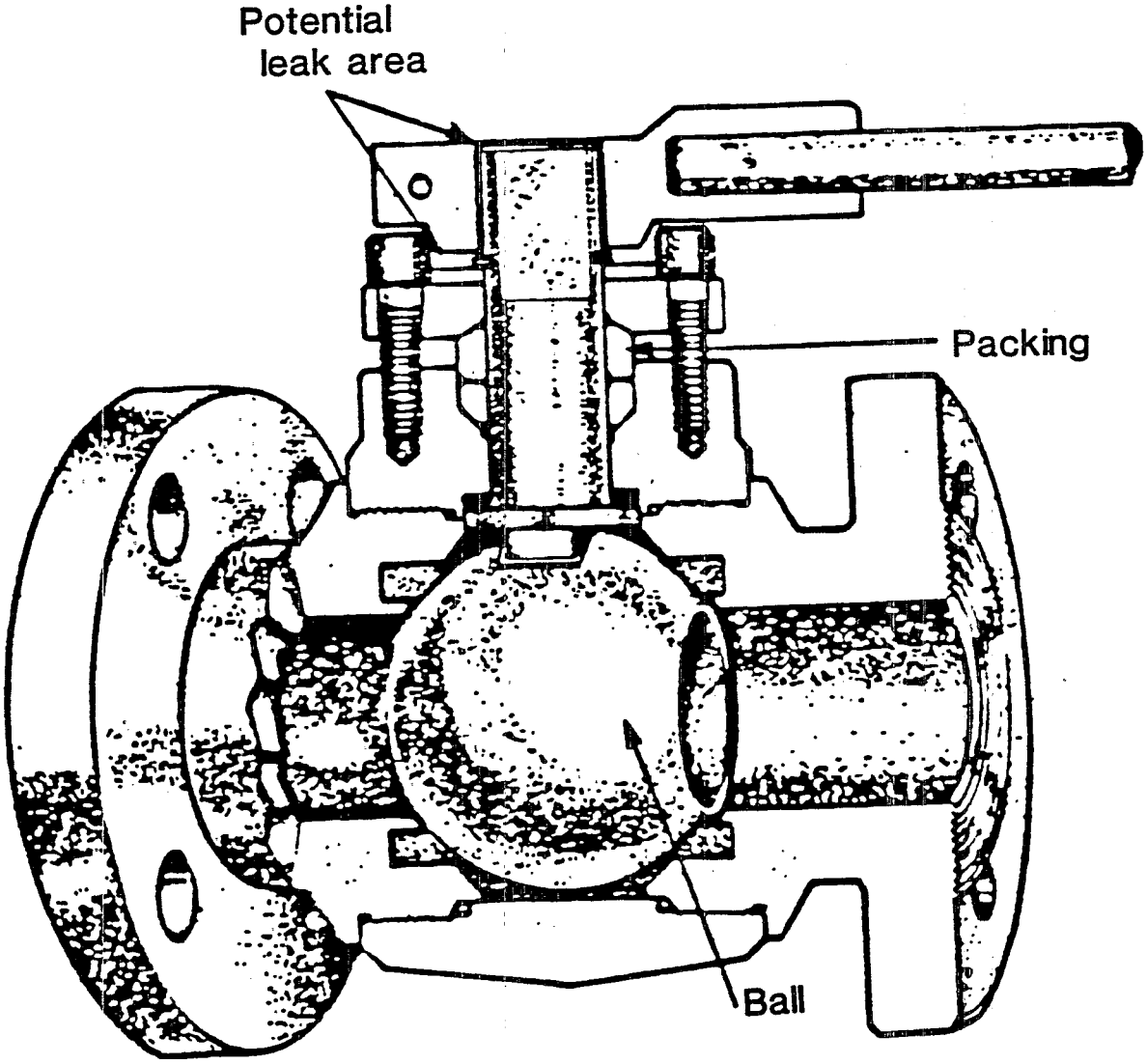

BALL VALVE[3]

FIGURE 3-4

3.1.6 Butterfly Valves

A butterfly valve (Figure 3-5) is a block valve which is essentially a flat circular plate that presses against a seal in the closed position and is held in place by fluid pressure. In the open position, the plate (which may be rounded somewhat for hydro-dynamic reasons) is parallel to the direction of flow. They occupy less space in the line than any other valves. Relatively tight sealing without excessive operating torque and seat wear is accomplished by a variety of methods, such as resilient seats, piston rings on the disk, and inclining the stem to limit contact between the portions of disk closest to the stem and the body seat to a few degrees of curvature.

3.1.7 Valve Seals and Leak Sources

Generally, the seal around the valve stem is a potential leak source on a valve. The most common type of valve stem seal is the packed seal (Figure 3-6), where a specialized packing material (lubricated braided asbestos, graphite, graphite-impregnated fibers, or Teflon® is inserted into the area around the valve stem, and then compressed by a packing gland to form a tight seal. The packing material used depends upon the valve application and configuration. At high pressures these glands must be quite tight to achieve a good seal. As the packing wears or lubricant loss occurs, the packing gland must be tightened to in order to provide a tight seal.

Elastomeric O-rings are also used for sealing process valves. These O-rings provide a good seal, but are not suitable where there is sliding motion through the packing gland, and are rarely used in high pressure service. Operating temperatures are limited by the O-ring material.

Bellows seals (Figure 3-7) are more effective for preventing process fluid leaks than are conventional packing glands or any other gland-seal arrangements. This seal incorporates a formed metal bellows that makes a barrier between the disc and body bonnet joint. The bellows is the weak point of the system and its service life can be quite variable. Consequently, the bellows seal is usually backed up with a conventional packing gland and often fitted with a leak detector in case the seal fails.

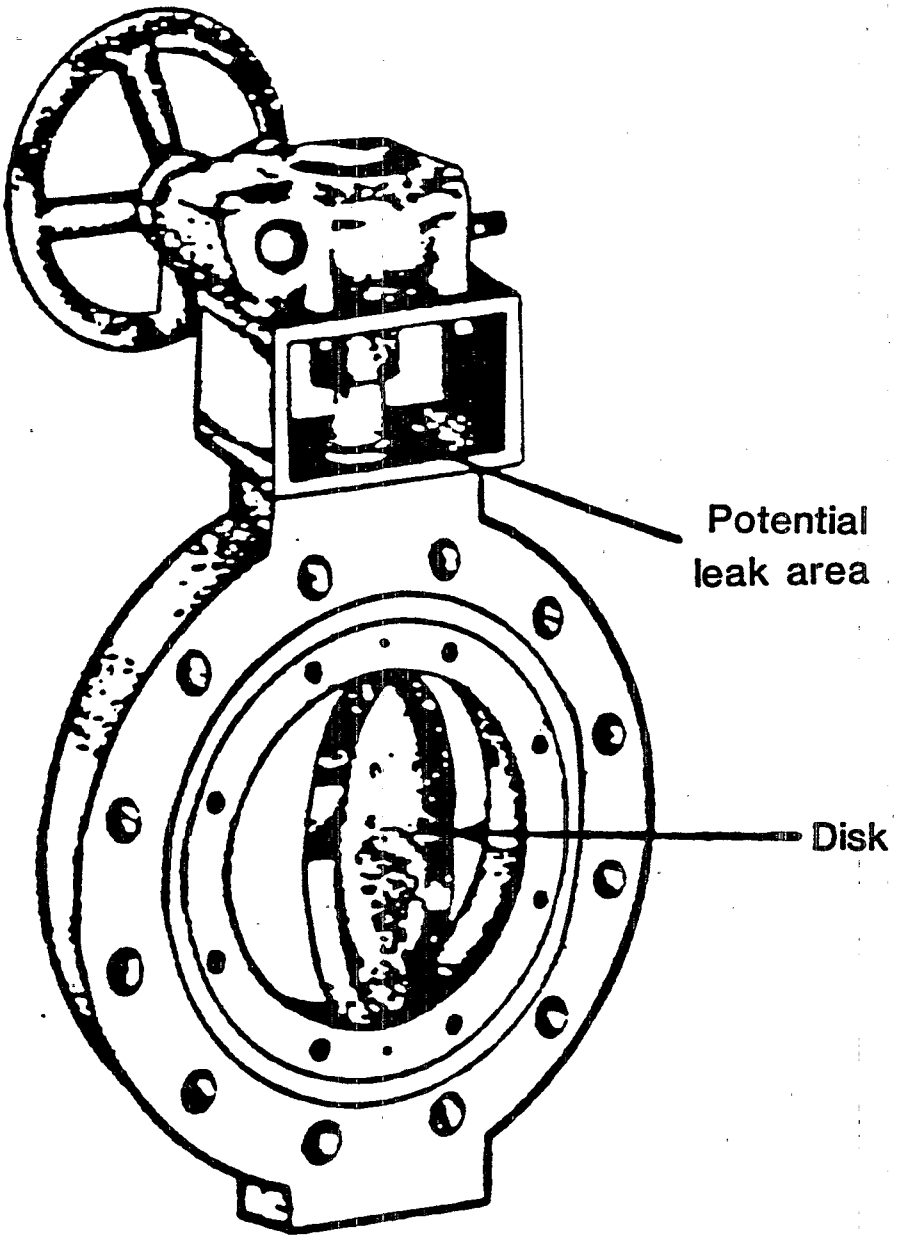

BUTTERFLY VALVE[3]

FIGURE 3-5

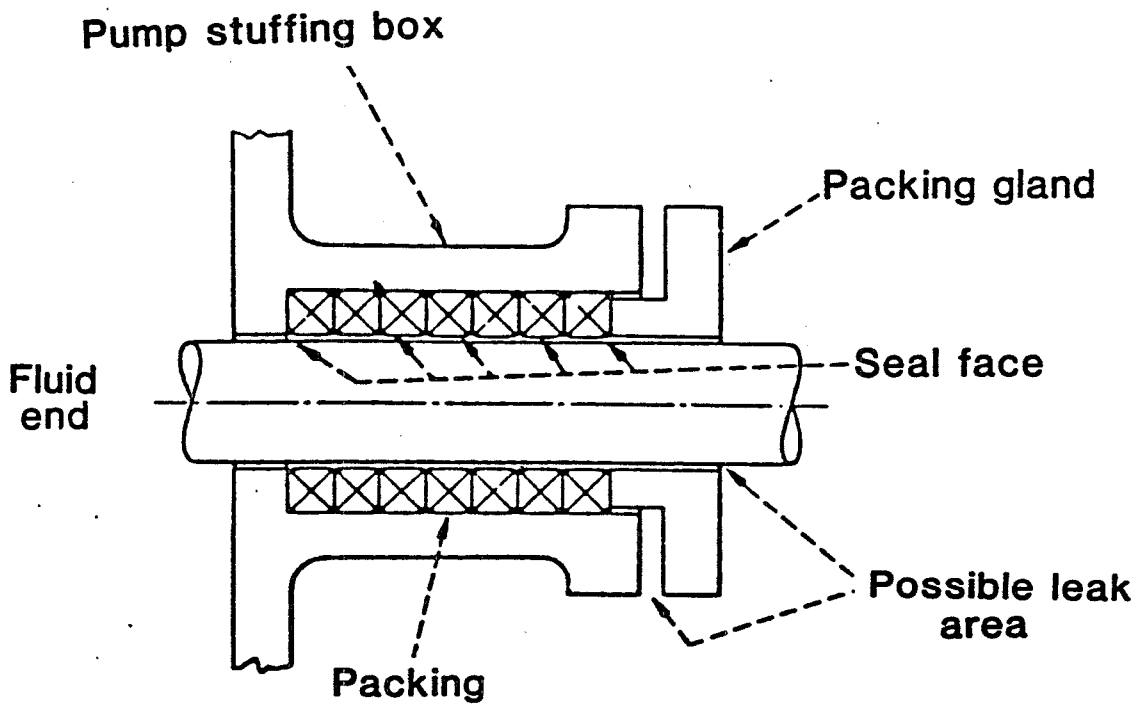

SIMPLE PACKED SEAL[2]

FIGURE 3-6

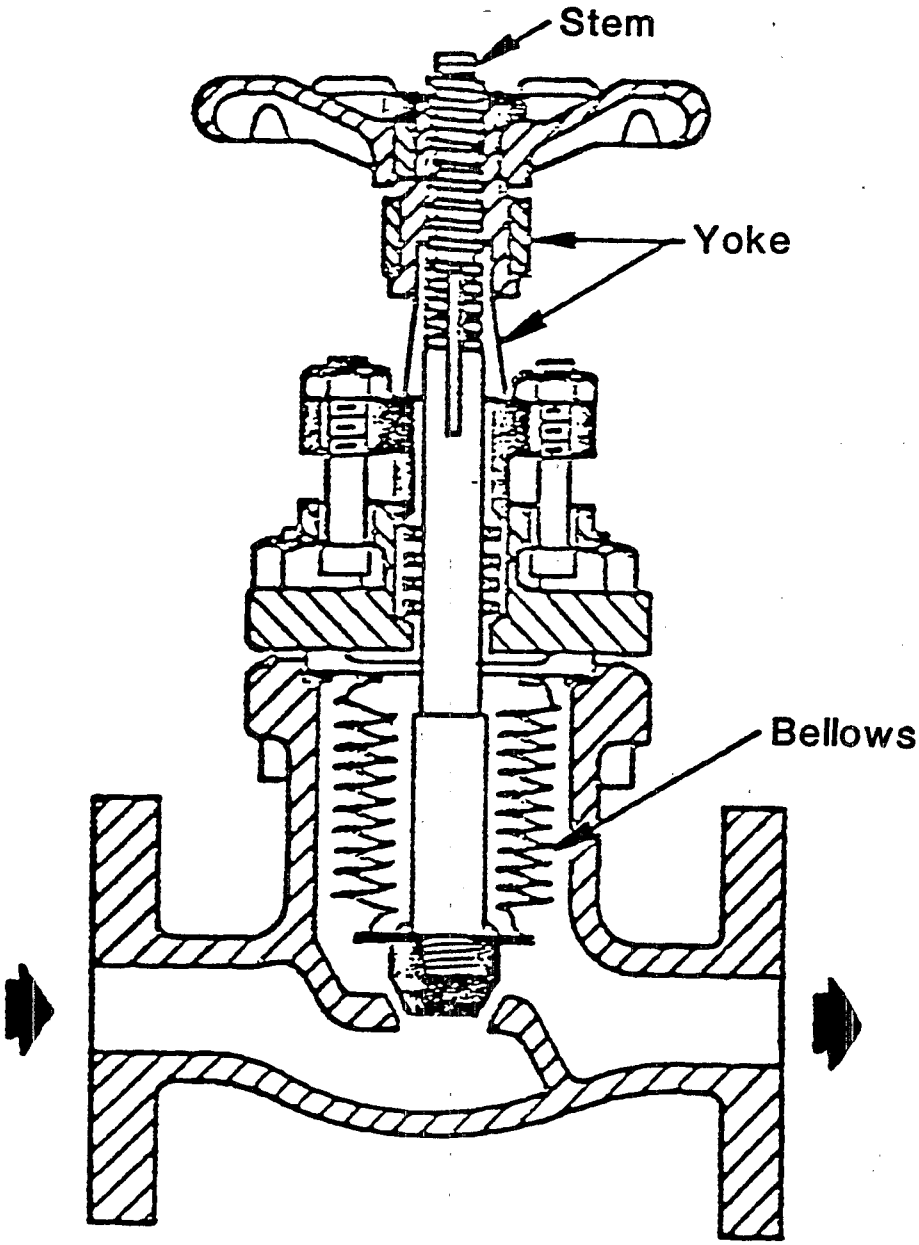

SEALED BELLOWS VALVE[2]

FIGURE 3-7

Specialized valve designs can isolate both the working parts of the valve and the environment from the process liquid. This may be done with a diaphragm seal or a weir seal. The weir seal's diaphragm may also be used to control the flow of the process fluid. In this design, a compressor component pushes the diaphragm toward the valve bottom, throttling the flow. The diaphragm and compressor are connected so that it is impossible for them to be separated under normal working conditions. When the diaphragm reaches the valve bottom, it seats firmly, forming a leak-proof seal. This configuration is recommended for fluids containing solid particles and for medium-pressure service. A valve using a diaphragm seal can become a source of fugitive emissions if that seal fails.

3.2 PUMPS

Because pumps are used extensively in the refining and organic chemical industries for moving organic fluid they are also a major potential benzene emission source. Centrifugal pumps are used most often in these industries, although positive-displacement pumps, reciprocating, rotary action pumps, and the specialized canned and diaphragm pumps are used for some applications. The following sections describe the principal pump types, their operating mechanisms, and the pump seal, the component most often responsible for fugitive emissions from pumps.

3.2.1 Centrifugal Pumps

A centrifugal pump (Figure 3-8), in its simplest form, consists of an impeller rotating within a casing. The impeller consists of a number of blades, either open or shrouded, mounted on a shaft that projects outside the casing. Impellers may have their axis of rotation either horizontal or vertical, to suit the work to be done. Closed-type or shrouded impellers are generally most efficient. Open- or semi-open-type impellers are used for viscous liquids or liquids containing solid materials and on many small pumps for general service. Impellers may be of the single-suction type (if the liquid enters from one side) or double-suction type (if it enters from both sides).

3.2.2 Reciprocating Pumps

There are three classes of reciprocating pumps; piston pumps, plunger pumps, and diaphragm pumps. In general, the action of the liquid-transferring parts of these pumps is

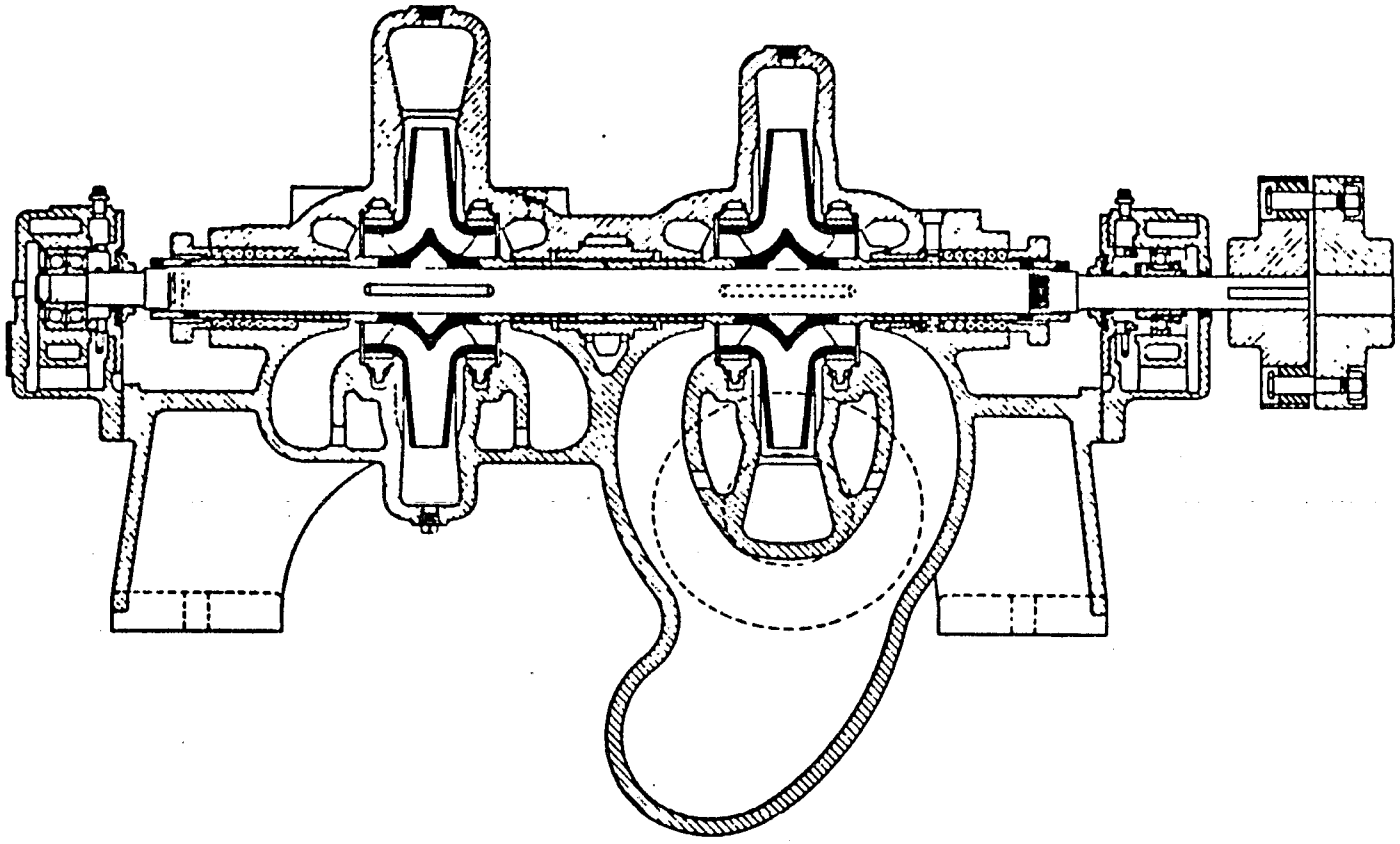

TWO-STAGE PUMP WITH DOUBLE-SUCTION IMPELLERS[1]

FIGURE 3-8

the same, a cylindrical piston, plunger, bucket, or round diaphragm being caused to pass or flex back and forth in a chamber. The device is equipped with valves for inlet and discharge of the liquid being pumped, and the operation of these valves is related in a definite manner to the motions of the piston. Diaphragm pumps (Figure 3-9) are a special case of reciprocating pumps. Their construction differs in that the reciprocating driving member is a flexible diaphragm fabricated of metal, rubber, or plastic. The chief advantage of this arrangement over other reciprocating pumps is the elimination of all packing and seals exposed to the liquid pumped.

3.2.3 Rotary Pumps

In rotary pumps (Figure 3-10) mechanical displacement of the liquid is produced by rotation of one or more members within a stationary housing. Because internal clearances are small, these pumps will only handle liquid that does not contain grit or abrasive material. When two or more impellers are used in a rotary-pump casing, the impellers will take the form of toothed-gear wheels as in Figure 3-11, of helical gears, or of lobed cams. In either case, these impellers rotate with extremely small clearance between each other and between the surface of the impeller and the casing. Referring to Figure 3-11, the two toothed impellers rotate as indicated by the arrows. The suction connection is at the bottom. As the spaces between the teeth of the impeller pass the suction opening, liquid is impounded between them, carried around the casing to the discharge opening, and then forced out through this opening. The arrows indicate this flow of liquid.

3.2.4 Canned Motor Pumps

The canned-motor pump (Figure 3-12) commands considerable attention in the chemical industry. These units are close-coupled designs in which the cavity housing the motor rotor and the pump casing are interconnected. As a result, the motor bearings run in the process liquid and all seals are eliminated. Because the process liquid is the bearing lubricant, abrasive solids cannot be tolerated. Canned-motor pumps are being widely used for handling organic solvents, organic heat-transfer liquids, and light oils, as well as many clean toxic or hazardous liquids, or where leakage is an economic problem.

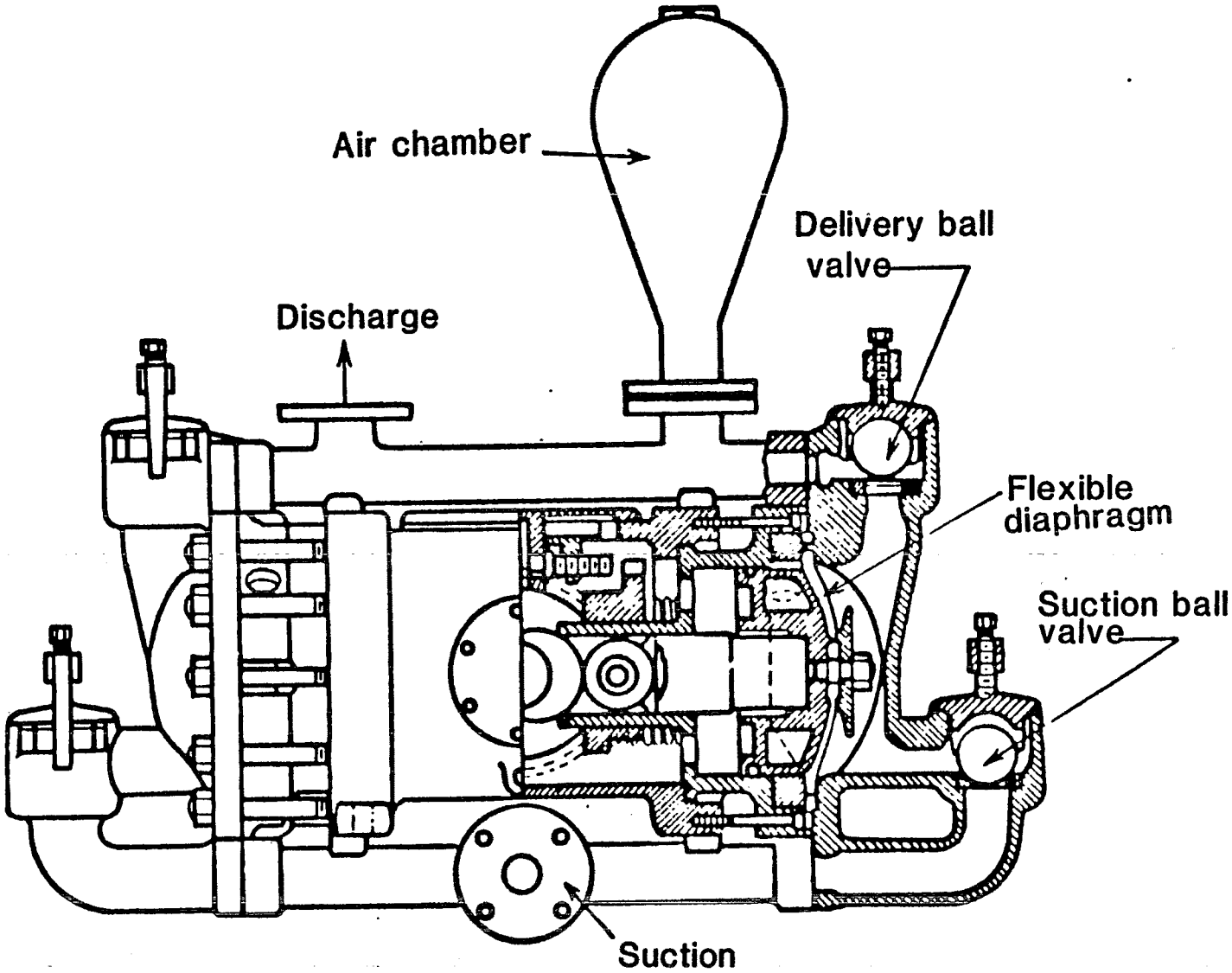

SHRIVER MECHANICALLY ACTUATED DIAPHRAGM PUMP [1]

FIGURE 3-9

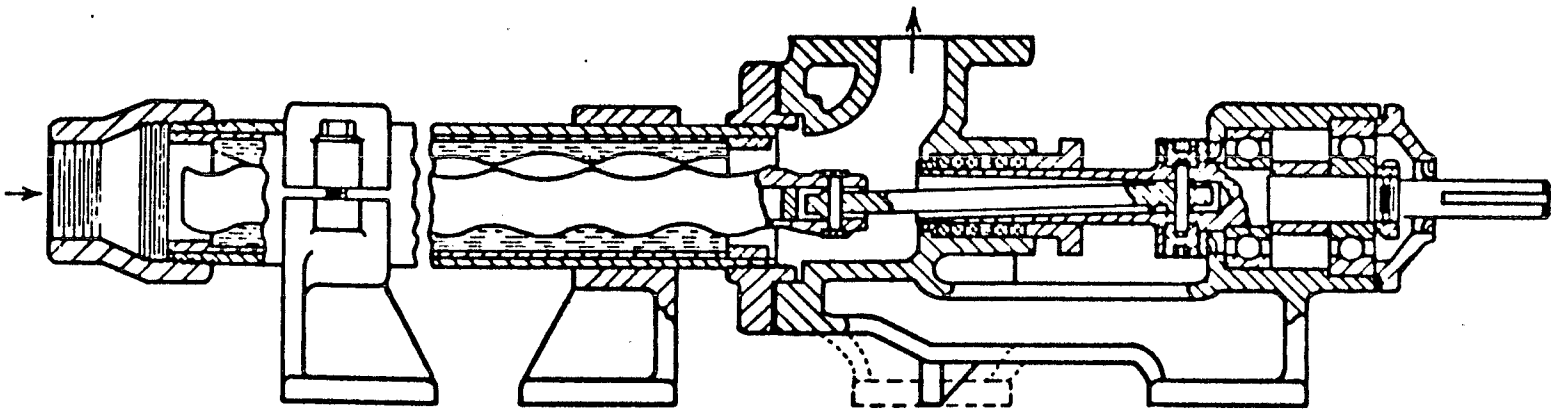

MOYNO SINGLE-ROTOR SCREW PUMP WITH ELASTOMERIC LINING[1]

FIGURE 3-10

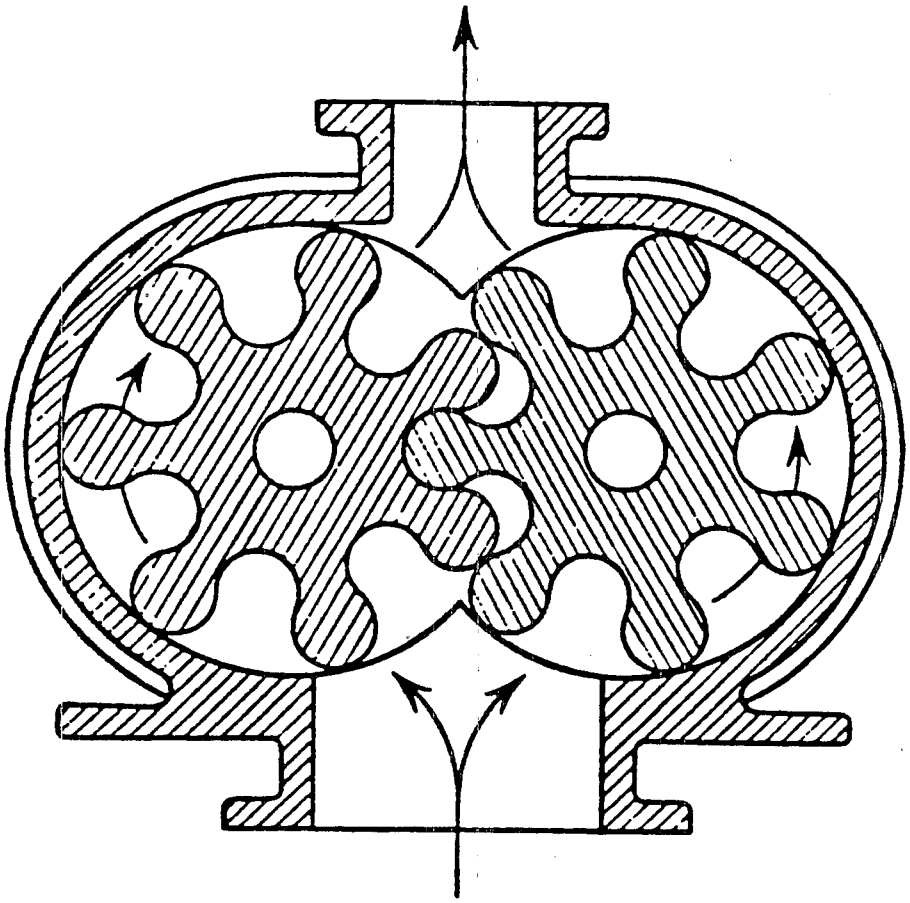

GEAR-TYPE ROTARY PUMP HAVING TWO IMPELLERS[1]

FIGURE 3-11

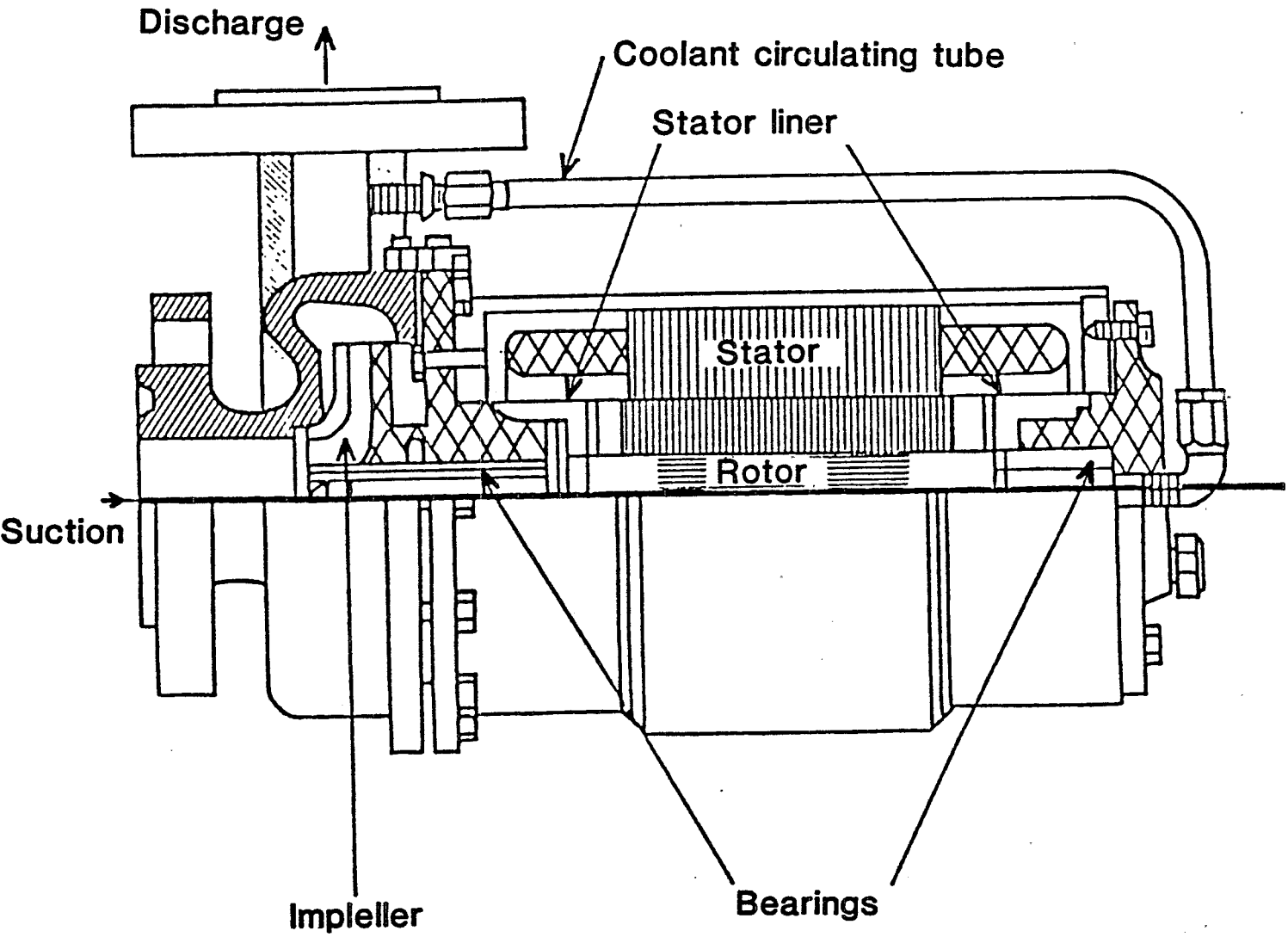

SEAL-LESS CANNED MOTOR PUMP[2]

FIGURE 3-12

3.2.5 Pump Seals and Leak Sources

The major source of fugitive benzene emissions from pumps (except for canned and diaphragm types) is the pump shaft seal. The rotating pump shaft requires a seal to isolate the pump's interior fluid from the atmosphere. When in operation, rotating shafts in pumps are usually displaced by amounts that very depending on the loads transmitted, therefore, their seals must be very flexible. Shaft lengths normally limited by such items as critical speed and allowable deflection require that seals be compact. The combination of flexibility, compactness and tightness can be difficult to achieve and maintain. The two most common seals used are packed and mechanical seals. The following description of the different types of seals is intended to provide the inspector an understanding of the impact of seal design on fugitive emission potential.

The most common type of rotating shaft seal is the packed seal which consists of packing composed of fibers which are first woven, twisted, or braided into strands, and then formed into coils, spirals, or rings. The packed seal can be used on reciprocating and rotary pumps. The packing material is compressed into a cavity or stuffing box forming a seal around the moving shaft. A packing gland is used to apply compression necessary to form a tight seal. Common packing materials are asbestos fabric, braided and twisted asbestos, rubber and duck, flax, jute, and metallic braids. The so-called plastic packings can be made with varying amounts of fiber combined with a binder and lubricant for high-speed applications. Each of these materials has a maximum temperature beyond which it may not be used, therefore, packed seals require lubrication to prevent frictional heat buildup between the seal and shaft.

To ensure initial lubrication and to facilitate installation, the basic packing materials are often impregnated with a lubricant. An effective means of renewing packing lubrication is to provide a lubricating lantern ring. The ring provides an opening for the forced feeding of oil, grease, sealed or secondary medium into the packing set, giving a constant supply of lubricant. This method is particularly effective on pumps handling volatile liquids and for the exclusion of solids from the sealing faces. Lantern rings are also employed for cooling, to provide an additional seal against leakage of liquid being pumped, and to prevent infiltration of air through the stuffing box on the pump suction side. In

packed seals where no lantern ring is used, a small amount of leakage through the packing is essential for lubrication of the seal.

The chief advantage of packing over other types of seals is the ease with which it can be adjusted or replaced. Most equipment is designed so that disassembly of major components is not required to remove or add packing rings. The major disadvantages of a packing-type seal are the necessity for frequent adjustment and the quantity of fluid flow required to lubricate it.

Mechanical seals are the most prominent seals used in industry. Mechanical seals may be classified as either single or double. Single mechanical seals (Figure 3-13), prevent leakage by means of two sealing rings, one stationary and one rotating. In a single mechanical seal, the surfaces or faces where the rotating primary ring and the stationary ring make contact are polished or precision finished to a very high degree of flatness in order to maintain contact over their entire surface, thereby creating a seal. The seal formed by the sealing faces is perpendicular to the shaft rather than parallel to it as in the packed seal. Single mechanical seals, like packed seals require lubrication to decrease frictional heat buildup. The lubricant used is often the pumped liquid or other fluids which are compatible with the fluid being pumped. Singe mechanical seals may develop leaks when the two sealing surfaces are damaged so that they no longer form a complete seal.

Dual mechanical seals are more effective than single mechanical seals in preventing leaks. Dual mechanical seals may be arranged back-to-back or in tandem. In the back-to-back arrangement, a closed cavity is formed between the two seal faces. The barrier fluid between the two seals is circulated through the cavity to lubricate and cool the seals. The barrier fluid must be maintained at a pressure greater than the pump stuffing box pressure in order for the seal to function properly. Hence, due to the pressure difference, any leakage occurring between the seals would be limited to the barrier fluid escaping into the process fluid. As long as the seals are operating properly, the barrier fluid will prevent the process fluid from contacting the environment and releasing benzene.

In the tandem dual mechanical seal arrangement, both seals are facing the same direction. The inner seal is located in the stuffing box housing. A barrier fluid, used for lubrication is maintained at a lower pressure than that of the pump stuffing box pressure. Leakage will occur from the pump stuffing box into the seal cavity containing the barrier

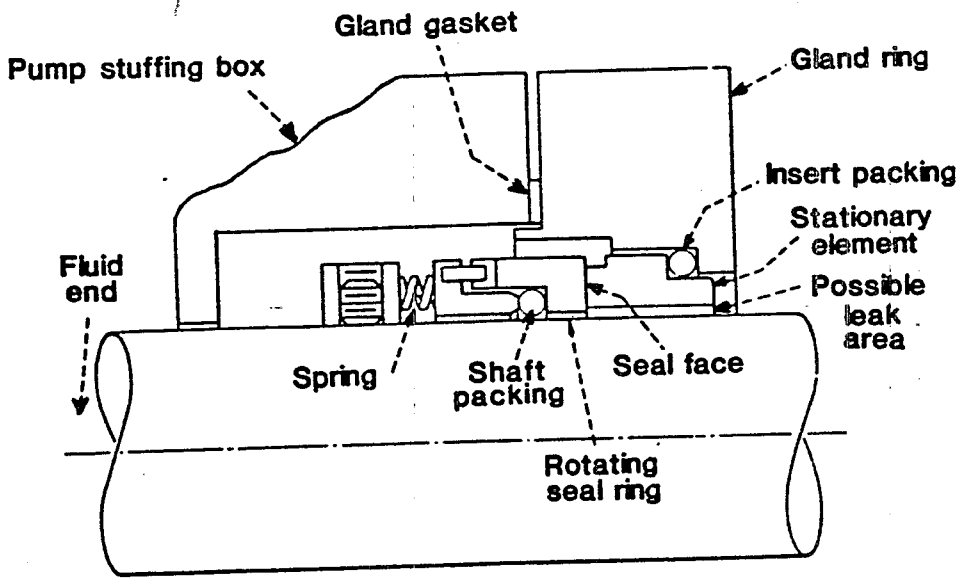

BASIC SINGLE MECHANICAL SEAL[2]

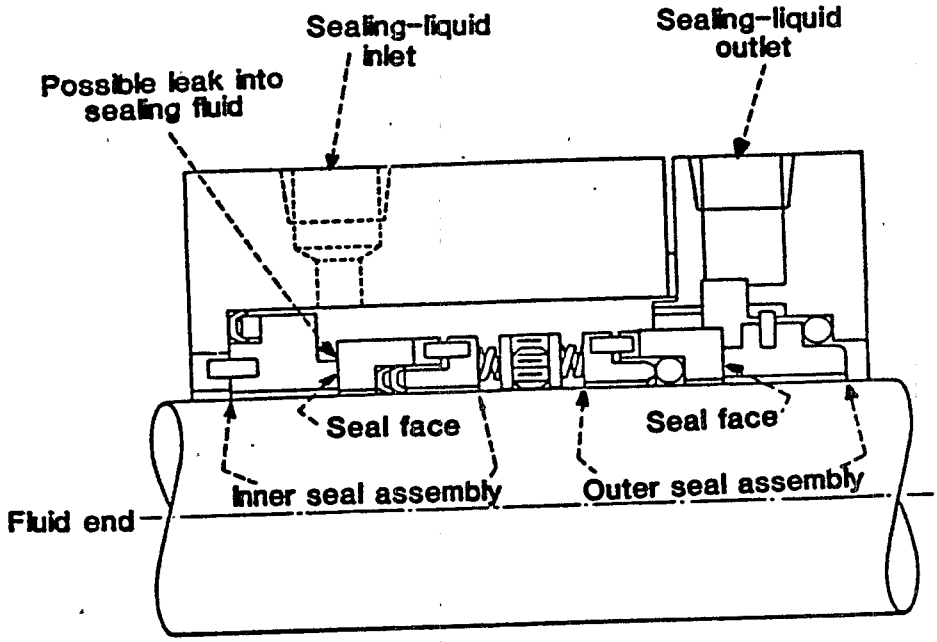

DOUBLE MECHANICAL SEAL[2]

FIGURE 3-13

fluid. To ensure that no benzene leaks occur, the barrier fluid system must be connected to a closed vent system which vents the emissions to a control device (i.e., enclosed combustion or vapor recovery).

Mechanical seals of all types find their best applications where fluids must be contained under substantial pressures. In such services, advantages of mechanical seals, as compared with conventional packed stuffing boxes, are reduced friction-power loss, elimination of wear on shaft or shaft sleeve, negligible leakage over a long service life, and freedom from periodic maintenance. On the other hand, mechanical seals are precision components and demand special handling and installation.

3.3 COMPRESSORS

Compressors are basically pumps that are used in gas service. Compressors, like pumps, can be both centrifugal and positive displacement types. They also have a shaft that requires a seal to isolate the compressor interior gas from the atmosphere. As with pumps, the possibility of a leak through this seal makes it a potential source of benzene emissions.

3.3.1 Compressor Types

Compressors may be of two types, centrifugal and rotary. The principle of a centrifugal compressor is the same as that of a centrifugal pump, the main difference being that the gas handled in the compressor is compressible while the liquids handled in a pump are practically incompressible. Rotary compressors, blowers and vacuum pumps are machines of the positive displacement type. Such units are essentially constant-volume machines with variable discharge pressure. Volume can be varied only by changing the speed or by by-passing or washing some of the capacity of the compressor.

3.3.2 Compressor Seals and Leak Sources

Fugitive benzene emissions from compressors result, for the most part, from an imperfect seal between the rotating shaft and the compressor housing. To prevent emissions, compressor seal systems may be built with all the seals described for pumps.

Mechanical contact seals for compressors are similar to the mechanical seals described for pump applications. Mechanical contact seals reduce the clearance between the rotating and stationary components to essentially zero. Oil or another suitable lubricant is applied to the seal faces. Barrier fluid reservoir degassing vents must be controlled with a closed-vent and control device system as described for pumps. Sometimes a barrier gas may be used to form a buffer between the compressed gas and the atmosphere. This system requires a clean external gas supply that is compatible with the gas being compressed. Contaminated barrier gas must be disposed of properly. The control efficiency for mechanical contact seals depends on the efficiency of the control device and the frequency of seal failures.

In addition to having seal types like those used for pumps, centrifugal compressors can be equipped with a liquid-film seal as shown in Figure 3-14. The seal is a film of oil that flows between the rotating shaft and the stationary gland. This seal is generally not subject to fugitive emissions at the seal itself, but the oil that leaves the compressor from the pressurized system side is under the system internal gas pressure and is contaminated with the benzene pollutant. When this contaminated oil is returned to the open oil reservoir, process gas and entrained benzene can be released to atmosphere. To eliminate release of emissions from the seal oil system, the reservoir must be enclosed and vented to a control device.

3.4 PRESSURE RELIEF DEVICES

Safety/relief valves are designed to release a product material from distillation columns, pressure vessels, reactors, and other pressurized systems during emergency or upset conditions. Release of material containing benzene makes this equipment an emission source. The frequency and duration of releases, however, are dependent on the operating conditions of the particular plant, and wide operational variations between plants can occur.

3.4.1 Types of Pressure Relief Devices

Safety/relief valves are required by engineering codes for applications where the pressure on a vessel or a system may exceed the maximum design level. A spring-loaded safety/relief valve, which is shown in Figure 3-15, is typically used for this service. The seal is a flat disk held in place on a seat by a spring during normal system operation. But,

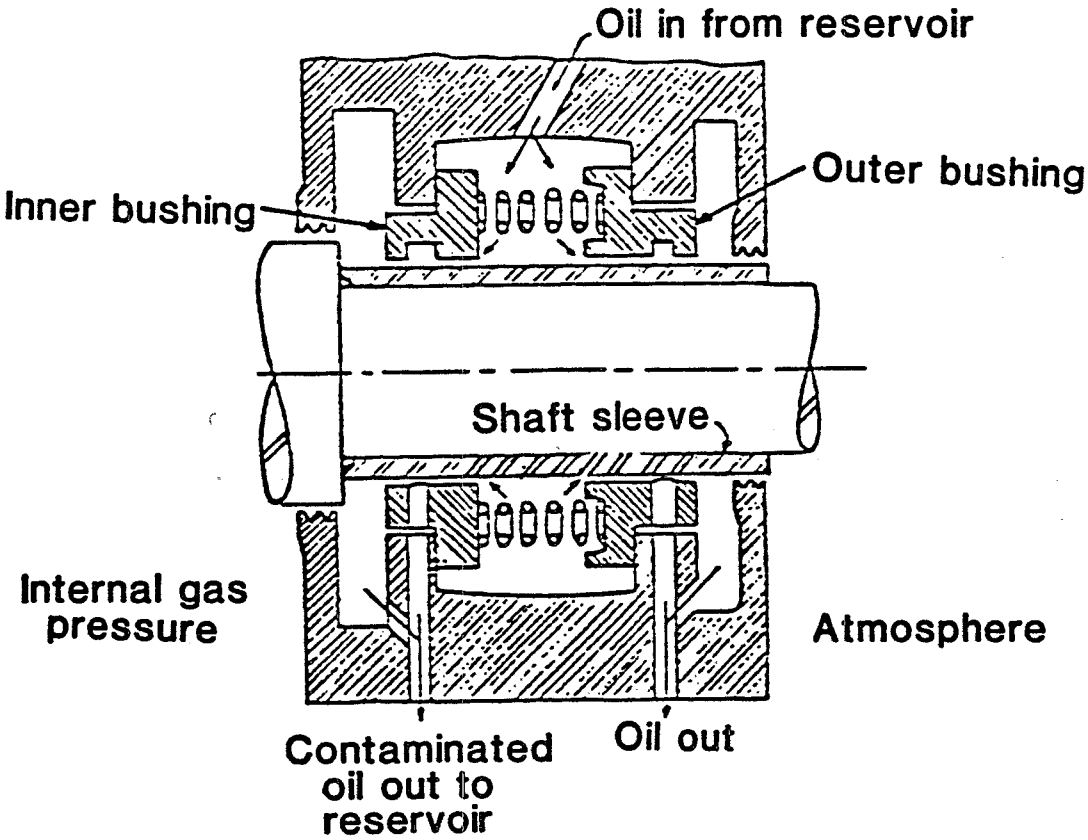

LIQUID-FILM COMPRESSOR SHAFT SEAL[2]

FIGURE 3-14

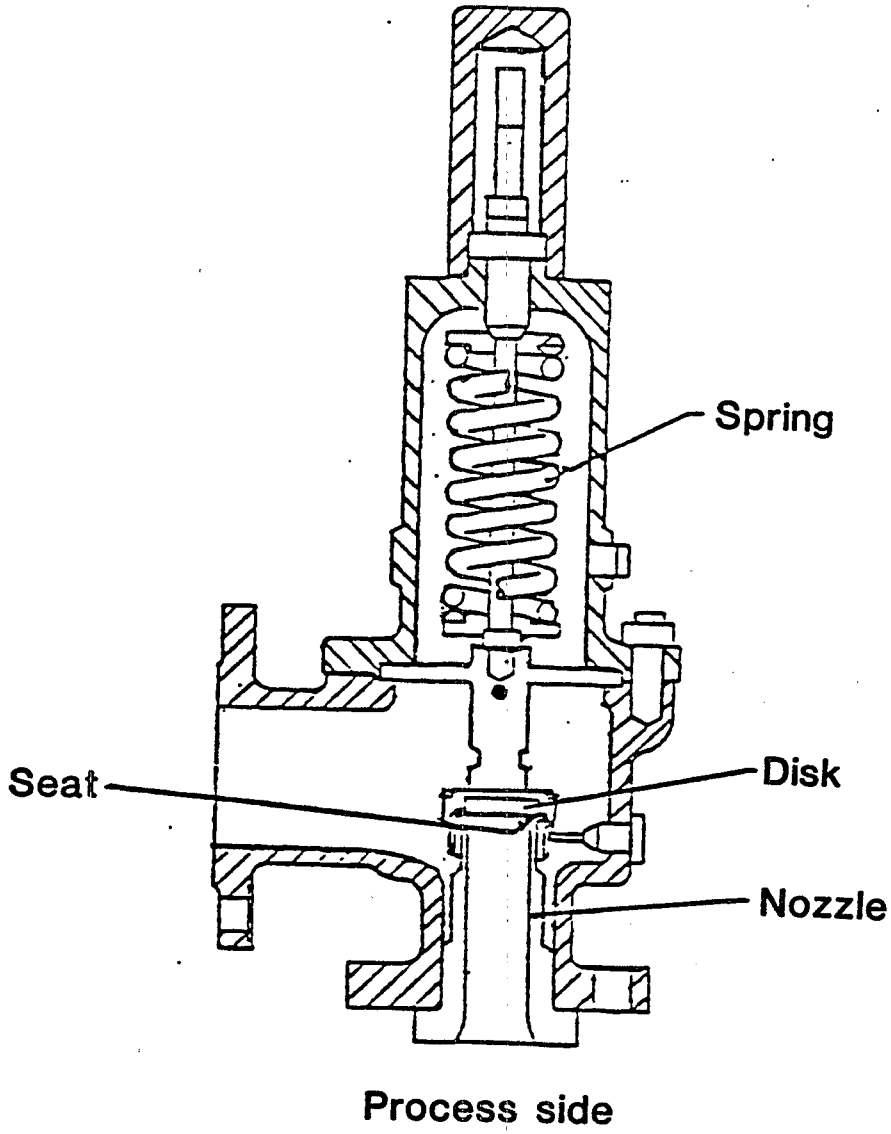

DIAGRAM OF A SPRING-LOADED SAFETY/RELIEF VALVE[2]

FIGURE 3-15

internal pressure build up will raise the disk, thereby breaking the seal and compressing the spring. Once the pressure is relieved, the disk will reseat.

Rupture disks are also commonly used on process units. These disks can be used in combination with or in place of pressure relief valves. For instance, a rupture disk can be installed upstream of a relief valve in order to prevent fugitive emissions through the relief-valve seat. Under normal conditions, the rupture disk seals the system tightly. But if its set pressure is exceeded, it will break and the relief valve will relieve the pressure. This procedure may require the use of a larger size relief valve because of operating codes. Since it is possible that the disk may rupture, the disk/valve combination may also require appropriate piping changes to prevent disk fragments from lodging in the valve, which would keep it from being reseated properly. A block valve upstream of the rupture disk may be required in order to permit in-service replacement of the disk after rupture. If the disk were not replaced, the first overpressure would result in the relief valve being the same as an uncontrolled relief valve and it might actually be worse since disk fragments may prevent proper reseating of the relief valve. In some plants, installation of a block valve upstream of a pressure relief device is common practice. In others, it is forbidden by operating or safety procedures. Tandem pressure relief devices with a three-way valve can be used to prevent operation without relief protection if block valves are not allowed.

In rupture-disk/relief-valve combinations, some provision for testing the integrity of the disk is necessary. Pressure should not be allowed to build up in the pocket between the disk and the relief valve; otherwise, the disk will not function properly. The pocket must be connected to a pressure indicator, recorder, or alarm. If the process fluid is not hazardous or toxic, a simple bubbler apparatus can be used to test the integrity of the disk by connecting the bubbler to the pocket. The control efficiency of the disk/valve combination is assumed to be 100 percent for fugitive emissions resulting from improper seating or relief valve simmering. The control efficiency would be lowered if the disk integrity were not maintained or if the disk were not replaced after rupture. The disk/valve combination has no effect on emissions resulting from overpressure relieving.

3.4.2 Emissions Sources

Sealing problems constitute the largest percentage of fugitive benzene emissions from pressure relief devices in service. Leaks through the seal on a pressure relief device may be caused by three reasons: (1) simmering or popping, (2) improper reseating of the valve after a relieving operation or (3) corrosion or degradation of the valve seat. Leaks caused by simmering occur when the operating pressure is similar to the set pressure of the valve. Leaks caused by popping occur when the operating pressure does exceed the set pressure, however, only for an extremely short period.

The advantage of a rupture disk is that it seals tightly and does not allow benzene to escape from the system under normal operation. However, when the disk does rupture, the system depressurizes until atmospheric conditions are obtained. This could result in an excessive loss of product or a corresponding excessive release of fugitive emissions. To provide control for both overpressure occurrences and any leakage that may occur, the rupture disk and relief valve may be vented to a control device such as a flare.

3.5 SAMPLING CONNECTIONS SYSTEM

Periodic analysis of feedstocks and product streams is often necessary to verify the proper operation of process units. To obtain a representative sample, purging of the sample lines is often required. During sampling procedures, the open-ended sample line is an intermittent source of fugitive emissions, since benzene emissions may be released to the atmosphere as a result of purging the vapor or liquid to the atmosphere or to open drains. To prevent emissions from reaching the atmosphere, each sampling connection system must be equipped with a closed-purge system or a closed vent system. Closed-purge systems or closed vent systems eliminate benzene emissions by one of three methods, namely: (1) returning the purged process fluid or vapor directly to the process, (2) collecting and eventually recycling the purged process material or (3) capturing and transporting all of the purged process fluid or vapor to a control device.

3.6 OPEN-ENDED VALVES OR LINES

In some process units, valves and lines are operated with a downstream line open to the atmosphere. Some examples are valves used for purging, venting or draining. In these

cases, faulty valve seats or incompletely closed valves are sources of fugitive benzene emissions, since leaks would be emitted directly to the atmosphere. Therefore, a blind, flange, cap, plug or a second valve is required to seal off the end of valves and lines when they are not in use. When installed downstream of an open-ended valve, these devices prevent valve seal leaks from reaching the atmosphere. If a second valve is used in conjunction with the first valve, the upstream valve should always be completely closed before the downstream valve is closed. This operational requirement is necessary to prevent the trapping of process fluid between the two valves.

3.7 PRODUCT ACCUMULATOR VESSELS

Product accumulator vessels include overhead and bottoms receiver vessels utilized with fractionation columns, and product separator vessels utilized in series with reactor vessels to separate reaction products. Storage tanks or vessels are exempt from the regulations unless they are surge vessels in a process unit. Only accumulator vessels which contain benzene at a level of 10 percent (in either the liquid or vapor phase), are classified as benzene emission sources under the NESHAP regulations and therefore require emission control.

Emissions from accumulator vessels occur through accumulator vessel vents and seal oil degassing system. The emissions must be controlled by a closed-vent system which captures and transports any leakage to a control device. The control device could be a closed combustion device, such as a process heater or a boiler or a vapor recovery device. Benzene emissions from accumulator vessels which contain organic compounds may produce noxious or corrosive gases if combusted. In these cases, the emissions should be vented by a closed vent system to a vapory recovery control device such as an absorber, adsorber, or condenser.

3.8 FLANGES AND OTHER CONNECTORS

Flanges and other connectors are used between sections of pipe and pieces of equipment. For the purposes of reporting and recordkeeping, the term connector refers to only flanged fittings which are not covered by insulation or other materials that prevent location of the fittings. Flanges are bolted gasket-sealed junctions used between pipe or

equipment components such as vessels, pumps or valves which may require isolation or removal. The gasket seal which is a potential leak area, makes flanges a source of fugitive benzene emissions. Flanges are generally leak-free if properly installed, but can develop leaks in the case of extreme overpressure. Flanges and other connectors are often so numerous that they cannot be isolated from the process to permit gasket replacement if a leak is detected. For on-line flanges, the only repair techniques are tightening the flange bolts or injection of a sealing fluid. In some cases, delay of repair may be allowed until the next process unit shutdown. Similar sources of benzene emissions are any joint connectors which have seals to prevent fugitive emissions. The two other major types of connectors are screwed and welded fittings. Screwed fittings may be sources of emissions when not properly tightened to form a complete seal.

3.9 CLOSED VENT SYSTEMS AND CONTROL DEVICES

One method of controlling fugitive benzene emissions from sources is to require a means of enclosing the source and venting the emissions to a control device. The operating parameters of the control device will affect the overall efficiency of the closed-vent/control device system. The closed-vent system employed must be able to collect and transport fugitive emissions to a control device. The venting system may be applied to control emissions from pump or compressor seals (or barrier fluid degassing reservoirs), pressure relief valves and product accumulator vessels. The closed-vent system itself may be a leak source if it fails to operate at the "no detectable emission" level. Similarly, the control device which receives the vented benzene emissions, becomes a leak source if it emits benzene to the atmosphere due to inadequate recovery or destruction operation. The two types of control devices which may be used to destroy benzene emissions are combustion or vapor recovery. Combustion devices consist of boilers, incinerators, process heaters or flares. Vapor recovery control devices include condensers, adsorbers and absorbers.

4.0 INSTRUMENTATION SELECTION AND OPERATION

The benzene NESHAP regulations require periodic monitoring of process equipment to determine facility adherence with the fugitive emission limitations. Reference Method 21 provides the technical procedure to be used for the emission testing. According to Reference Method 21, the inspector may select any one of the various portable VOC detection instruments available on the market as long as it meets the instrument performance specifications stipulated by the method. These monitors involve a variety of detectors that operate on several different principles. Each detector has its own advantages, disadvantages, and sensitivity.

Conducting a fugitive emissions inspection that efficiently satisfies the goals of the leak detection and repair program requires that the inspector be thoroughly familiar with all the equipment available, the important variables to consider when selecting a monitor, as well as the calibration, operation and maintenance procedures.

4.1 VOC DETECTORS

Several types of portable VOC detectors can be used either as screening tools or to meet the requirements of Reference Method 21. These include:

- Flame ionization detector (FID)
- Photoionization (ultraviolet) detector (PID)
- Nondispersive infrared detector (NDIR)
- Catalytic combustion

Each of these detectors has its peculiar advantages and disadvantages. The particular detector that is best for any given application will depend on a number of factors, such as the type and concentration VOC to be monitored, and other VOC's that may be present, and conditions at the plant (such as dust, smoke or high humidity). Table 4-1 lists typical parameters, advantages and disadvantages for each type of detector.

Table 4-1 PERFORMANCE COMPARISON OF FOUR MAJOR VOC DETECTORS

		FID	PID	Catalytic Combustion	IR
1.	Well detected VOC classes	Aliphatic, olefinic, and aromatic hydrocarbons	Aromatic and olefinic hydrocarbons, chlorinated compounds	Similar to FID	Hydrocarbons
2.	Poorly detected VOC classes	Highly oxygenated or halogenated compounds. Sulfur, nitrogen, phosphorus containing compounds also reduced response	Aliphatic hydrocarbons	Similar to FID	Highly dependent on IR absorption spectrum. Water vapor will interfere with certain compounds
3.	Typical calibration compound	Methane, propane n-hexane	Benzene, butadiene	Methane, propane n-hexane	Compound of interest or very similar compound
4.	Typical detection range, ppmv	1-10,000	1-2000 or 10-20,000 (with dilution)	Several ranges available from 10 ppm up to lower explosion limit	1-10,000 (highly dependent on specific compound)
5.	Typical calibration accuracy, %	2-10	5-10	2-10	2-10
6.	Typical calibration precision, %	2-5	2-5	2-5	2-5

Table 4-1 PERFORMANCE COMPARISON OF FOUR MAJOR VOC DETECTORS (Continued)

	FID	PID	Catalytic Combustion	IR
7. Typical response time, seconds	3-10	3-10	3-20	5-100
8. Major advantages	a) some response obtained for many organic compounds	a) detects oxygenated and chlorinated compounds not detected by FID b) no external gas supply required	a) low cost b) lighter to carry c) no external gas supply required	a) qualitative information may be obtained b) no external gas supply required
9. Major limitations	a) poor response for highly oxygenated or chlorinated compounds b) external gas supply (hydrogen) required	a) does not respond to low molecular weight aliphatic hydrocarbons b) detection of high levels may require dilution of the sample stream	a) poor response for highly oxygenated or chlorinated compounds b) not as sensitive as the other techniques	a) water vapor and other atmospheric constituents may interfere

The specifications of individual instruments vary greatly with regard to sensitivity, range, and responsiveness. Table 4-2 lists the most common monitors currently in use and the associated detection principle, range, sensitivity, and response time of each. The following sections will discuss the operating principle and limitations of each type of detector.

4.1.1 Flame Ionization Detector (FID)

Flame ionization detectors utilize a flame to supply energy to ionize the sample and then measure the charge or number of ions produced. Pure hydrogen burning in air produces very little ionization, so background effects are essentially masked by the hydrogen flame. A concentration of even 0.1 ppm of a hydrocarbon produces measurable ionization, which is a function of the number of carbon ions present. A positively charged collector surrounds the flame, and the ion current between the flame and the collector is measured electronically. The calibrated output current is read on a panel meter or chart recorder.

Organic compounds containing nitrogen, oxygen, or halogen atoms give a reduced response when compared to compounds without these atoms. The FID hydrocarbon analyzers are usually calibrated in terms of a gas such as methane or hexane, and the output is read in parts per million of carbon measured as methane or hexane.

Although nitrogen (N_2), carbon monoxide (CO), carbon dioxide (CO_2), and water vapor (H_2O) do not produce significant interferences, condensed water vapor can block the sample entry tube and the flame arrestors causing erratic readings. Also, when oxygen (O_2) content of the organic compound exceeds 4 percent, a significantly lower output reading can occur. The relative response of the FID to various organic compounds, including those with attached oxygen, chlorine, and nitrogen atoms, varies from compound to compound.

4.1.2 Photoionization Detector (PID)

In the photoionization process, ultraviolet light ionizes a molecule as follows: $R + hv = R^+ + e^-$, where R^+ is the ionized species and hv represents a photon with

TABLE 4-2 MOST COMMON PORTABLE VOC DETECTION INSTRUMENTS[a]

Monitor	Detection Principle	Range, ppm	Sensitivity	Response Time, Sec
Century OVA 108,[b] (Foxboro)	FID	1-10,000	0.5 ppm (Model 108)	2
Century OVA 128[b] (Foxboro)	FID	0-1,000	0.2 ppm (Model 128)	2
PI-101 (HNU Systems,[c] Inc.)	PID	0-20, 0-200, 0-2000	1 ppm	5
TLV Sniffer[d] (Bacharach)	Catalytic combustion	0-500, 0-5000, 0-50,000	2.0 ppm	3-20
Miran 1A[e] (Foxboro)	IR	ppm to %	1 ppm	1, 4, 10 and 40

[a] Does not necessarily represent all portable monitors currently being sold.
[b] Foxboro Company instrument manual for Century OVA 108 and Century OVA 128 Analyzers, 1989.
[c] HNU Systems, Inc. instrument manual for PI-101 Analyzer, 1989.
[d] Bacharach Inc. instrument manual for TLV Sniffer, 1987.
[e] Foxboro Company instrument manual for Miron 1A Analyzer, 1985.

energy greater than or equal to the ionization potential of the molecule. Generally all species with an ionization potential less than the ionization energy of the lamp are detected. Because the ionization potential for all major components of air (O_2, N_2, CO, CO_2, and H_2O) is greater than the ionization energy of lamps in general use, these compounds may not be detected. Lamps are categorized by their major emission spectra but they usually emit additional emissions, although much less intense, at higher energy level wavelengths. Therefore, some compounds can be detected even when their ionization potential is slightly above the lamp rating.

The sensor consists of an ultraviolet (UV) light source and an optical window which forms the base of the lamp and one side of the photoionization chamber. The chamber adjacent to the sensor contains a pair of electrodes and the sample gas inlet and outlet ports. Organic compounds within the sample gas absorb UV radiation and form positive ions. When a potential is applied to one electrode, the electrical field that is created drives ions formed by the absorption of UV light to the collector electrode, where the electrical current (proportional to the organic vapor concentration) is measured.

4.1.3 Nondispersive Infrared Detector (NDIR)

Nondispersive infrared (NDIR) spectrometry is a technique based on the broadband absorption characteristics of certain gases. Infrared radiation is typically directed through two separate absorption cells: a reference cell and a sample cell. The sealed reference cell is filled with nonabsorbing gas, such as nitrogen or argon. The sample cell is physically identical to the reference cell and receives a continuous stream of the gas being analyzed. When a particular hydrocarbon is present, the IR absorption is proportional to the molecular concentration of that gas. The detector consists of a double chamber separated by an impermeable diaphragm. Radiant energy passing through the two absorption cells heats the two portions of the detector chamber differentially. The pressure difference causes the diaphragm between the cells in a capacitor to distend and vary, changing the capacitance. This variation in capacitance, which is proportional to the concentration of the component of gas present, is measured electronically.

4.1.4 Catalytic Combustion

The catalytic combustion detector employs a heat source to oxidize organic vapors. The organic vapor is ignited in a gas cell upon contact with a heated catalyst coated filament; the resulting heat release changes the filament resistance, which is measured and related to the gas concentration.

4.2 SELECTION OF INSTRUMENTS

The selection of equipment to be used in fugitive benzene emissions inspections is based on several factors: detector response and selectivity; instrument range and accuracy; ease of use; and safety. These factors are discussed in detail in this section.

4.2.1 Detector Response and Selectivity

One important criterion in the selection of organic vapor detectors is the response of the instrument to the specific chemical or chemicals present in the gas stream. The abilities of the four major classes of organic vapor analyzers to detect different organic chemicals differ substantially.

Unfortunately, instrument response can be complex functions of numerous variables. The response depends on the chemical compound used to calibrate the organic vapor detector and on the concentration and composition of organic vapor being analyzed. Published response factors that specify the value based on the instrument-determined concentration are preferred in the selection of an instrument because they are the most consistent with the regulatory format.

Rapidity of detector response is another factor that must be considered in the choice of instrument. Short response times can speed the conduct of the inspection, and help to prevent condensation of non-volatile compounds, which can result if the probe remains for too long in a concentrated atmosphere.

4.2.2 Range and Accuracy

The ability of an instrument to measure 10,000 ppmv should be carefully considered if the instrument will be used to determine compliance with benzene regulations. As indicated in Table 4-2, only a few of the currently available units can operate at 10,000 ppmv or above. Other units can operate at this concentration only by using dilution probes. Although dilution probes can be used accurately, they can also be a source of error. Both changes in flow rate through the dilution probe and saturation of the charcoal tubes used to remove organic vapors from the dilution air can lead to errors in the indicated organic vapor concentration. Charcoal tubes have a finite limit on the amount of organic compounds that can be absorbed per unit mass of charcoal at a given temperature. The presence of high vapor concentrations in the ambient air will therefore cause rapid saturation of the charcoal. The inspector should watch for this and carry spare tubes for use should replacement be necessary. Dilution probes also complicate calibration and field span checks.

Generally, the instruments should have the desired accuracy at the concentration of interest. It should be noted that an instrument accuracy of $\pm$ 5 percent is required by Method 21.

4.2.3 Ease-of-Use

Ease of use is an important instrument selection criterion because of the conditions under which the field inspector must work. The instrument must be as light as possible because the inspector may need to walk over relatively large areas to evaluate fugitive leaks from numerous valves and other sources. In some cases, a moderate amount of climbing is also necessary. After several hours, even a light instrument can become uncomfortably cumbersome.

Table 4-3 contains information concerning the portability of some of the commercially available organic vapor instruments. As shown, the weights of the units and the manner in which they are used differ substantially. Other factors which should be considered are (1) how easy the gauge is to read, and (2) whether the zero and span adjustment knobs are sensitive (but not too much so) and lock firmly in place after

TABLE 4-3 EASE-OF-USE OF ORGANIC VAPOR ANALYZERS

Instrument Manufacturer	Type	Weight, lbs	Mode of use	Other Comments
Foxboro 108	FID	12	Shoulder strap	Readout on probe
Foxboro 128	FID	12	Shoulder strap	Readout on probe Necessary to remove cover to adjust range
Photovac 10S50	PID	26	Case with handle	Necessary to open case at each measurement site
HNU PI-101	PID	9	Shoulder strap	
TECO Model 580	PID	8	Small case with handle	
TECO Model 712	FID	14	Shoulder strap	Readout on probe
Barachach TLV Sniffer	Catalytic	5	Shoulder strap	
Miran 1A	Infrared	32	Carrying handle	Necessary to set unit down at each measurement site

calibration. Generally, the easier an instrument is to use, the more likely it will be used properly and generate data of acceptable quality.

4.2.4 Safety

All instruments used during field inspections of benzene sources must be intrinsically safe if they are to be used in potentially explosive atmospheres. Localized pockets of gas (and even particulates) within the explosive range can result from fugitive leaks and malfunctioning control devices. Intrinsic safety simply means that the instrument will not provide a source of ignition for the explosive materials when the instrument is used properly. Instrument designs are certified as intrinsically safe for certain types of atmospheres by organizations such as the Factory Mutual Research Corporation.

4.3 INSTRUMENT CALIBRATION AND EVALUATION

Instruments used to determine compliance of industrial facilities must be accurately calibrated on a routine basis. The calibration precision test, response time, and response factor tests also should be performed to confirm that the instruments are operating properly for the specific application(s). This section presents various calibration and instrument evaluation options available.

4.3.1 Instrument Calibration Requirements and Procedures

Calibration requirements for benzene instrumentation are specified in Reference Method 21. The requirements pertaining to calibration are briefly summarized here.

- The instruments should be calibrated daily.
- The gas concentration used for calibration should be close to the leak definition concentration.
- The calibration gas should be methane or n-hexane.
- A calibration precision test should be conducted every month.
- If gas blending is used to prepare gas standards, it should provide a known concentration with an accuracy of $\pm$ 2 percent.

The daily calibration requirement specified in Method 21 gives individual instrument operators some flexibility. The calibration could consist of a multipoint calibration in the lab, or it could be a single-point "span check" in the field.

Method 21 does not specify where the daily calibration takes place. Obviously it would be simpler to conduct the calibration test in the agency laboratory rather than after arrival at the plant being inspected; however, the calibration could conceivably shift sufficiently to affect the accuracy of the leak detection measurements. Because of the suspected potential for calibration shifts in all of the organic vapor analyzer types, one should consider conducting at least a single-point span check after the instrument arrives on-site and every subsequent day of testing.

Calibrations performed in the regulatory agency laboratory are conducted under more controlled conditions than calibrations that are conducted in the field because uniform day-to-day calibration gas temperatures and calibration gas flow rates can be maintained in the laboratory. Furthermore, the initial calibration test provides an excellent opportunity to confirm that the entire instrument system is working properly before it is taken into the field. The laboratory calibration data should be carefully recorded in the instrument calibration/maintenance notebook discussed later, and this calibration should be considered as the official calibration required by the regulations. A span check that differs significantly from the laboratory calibration is cause for concern, and the cause of the deviation should be determined and corrected before the inspection proceeds.

The laboratory calibration is best performed by the personnel assigned primary responsibility for the maintenance and testing of all the agency organic vapor analyzers. This ensures the use of proper and consistent procedures. If instrument problems are identified, either the instrument can be repaired or the field inspector can be issued another unit that is operating properly.

The calibration procedures for each instrument model are specified in the manufacturer's instruction manual. Material presented in this section is intended to emphasize the importance of certain calibration procedures discussed in these various instruction manuals.

Regardless of the type of VOC instrument, the flow rate of the gas during calibration should be approximately equal to the normal sampling rate of the instrument, as flow rate can influence the measured concentration. Proper flow rate is very important for the FID instruments.

The gas used for calibration must be methane or n-hexane at a known concentration of approximately, but not less than, 10,000 ppmv methane or n-hexane. A TEDLAR or MYLAR bag should be filled with the calibration gas. During calibration, the instrument simply withdraws a gas sample from the bag at a rate of 0.5 to 3.0 liters per minute, depending on its normal sampling rate and is adjusted (according to manufacturer's instructions) to give appropriate readings.

4.3.2 Field Span Check Procedures

Proper performance of the field span check is crucial to insuring the validity of the data to be collected on the inspection. This section will discuss generating calibration atmospheres, length of time spent on the span check, where the span check should be performed and the documentation that should be made of the results of the span check.

The following are some of the various means to provide a calibration gas on-site:

- Use large pressurized gas cylinders transported to inspection sites.
- Use certified gas cylinders provided by the source being inspected.
- Use disposable gas cylinders with the appropriate gas composition and concentration.

Transporting large pressurized gas cylinders is generally impracticable because most agencies do not have the vehicles necessary for this purpose. It is not safe to transport unsecured, pressurized gas cylinders in personal or State-owned cars. Furthermore, there are specific Department of Transportation (DOT) regulations governing the shipping of compressed gases. The gas cylinders are also heavy and awkward to use in the field.

Using the source's gas cylinders is certainly the least expensive approach for a regulatory agency; however, the appropriate gas cylinders are not always available. Also, the use of the source's cylinders prevents the agency from making a completely independent assessment of the VOC fugitive leaks.

Disposable cylinders of certified calibration gas mixtures are relatively simple to use because no on-site blending is necessary and the cylinders are easily transported. The calibration gas mixture may be fed to the instrument directly by using a preset regulator that provides constant gas flow and pressure; or the gas can be fed into a TEDLAR or MYLAR bag, from which it is drawn into the portable instrument.

Relatively little time is required for the span checks when portable cylinders of certified gas mixtures or transfer gas sample cylinders are used. It should be noted that the instrument warm-up must be done anyway, therefore this time should not be "charged" against the span check. The overall time commitment to the field span checks is not excessive when one considers the clear indication of organic vapor analyzer performance that these checks provide and the waste of time that would occur if a problem that could have been detected was overlooked.

The field span check should be performed as far away as possible from potential sources of fugitive VOC. The check should also be performed in areas where there are no large AC motors or other equipment that generate strong electrical fields, as such equipment can have an adverse effect on certain types of instruments (e.g., photoionization analyzers). The charcoal filter used in the "clean air" supply should be routinely regenerated or replaced to avoid the possibility of saturation. The charcoal filter should be checked occasionally for saturation by supplying a moderate, known concentration of VOC and then checking the measured exit concentration after several minutes. Spare charcoal filters should be kept with the instrument.

Data concerning the span checks (such as a plot of calibration gas concentration versus instrument reading) should be recorded in the inspector's field notes. This will demonstrate that the specific unit operated properly during the period in which compliance information was obtained at the inspection site. If gauges are provided with the

instrument, the field inspector also should occasionally note the instrument sample gas flow rate and document the flow rates occasionally during the inspection.

4.4 INSTRUMENT MAINTENANCE PROGRAM AND RECORDS

In most regulatory agencies, numerous individuals will use the portable organic vapor analyzers, and it is unrealistic to expect all of them to be fully knowledgeable concerning instrument calibration and repair. It is also unrealistic to ask each of them to make independent determinations of organic vapor analyzer response factors or other performance data obtained on a frequent basis. Therefore, one or two people should be assigned the responsibility for the overall maintenance of the instruments and records of calibrations or repairs. Persons skilled in instrument calibration and/or repair are needed for this assignment. They can make whatever nonroutine tests and measurements are necessary to ensure that the monitors continue to perform adequately. They can also instruct other agency personnel concerning the proper way to replace filters, detectors, and battery packs; to operate the unit; and to perform field span checks. The persons assigned responsibility for the instruments should become familiar with the manufacturer's operation manual and the recommended routine maintenance schedules and procedures for each instrument.

Only those persons assigned responsibility for the instruments should make any repairs other than the replacement of detectors, photoionization lamps, battery packs and particulate filters. These components can be replaced by the inspector and the replacements noted in a log or report provided to the person who has been assigned responsibility for the unit. Allowing only qualified personnel to work on the instruments reduces the chance of the intrinsic safety of an instrument being inadvertently compromised. The instruments should be returned to the manufacturers for any repairs that the people assigned responsibility for instrument maintenance cannot perform.

Records should be maintained on each instrument including: all calibrations, (field and laboratory), any response factor determinations, and all repair notes. Problems reported by field personnel should be briefly summarized in a chronological record. The file should contain at least one copy of the operating manual for the instrument and a list of all part numbers (if not included in the manual). There should also be a chronological

record of each time the instrument was used in the field, it's operator, and the location of the inspection.

4.5 INSTRUMENT PERFORMANCE CHECKS

Several instrument performance checks should be made before the inspector leaves for the job-site and during the routine screening of possible fugitive benzene sources. Preferably, the initial instrument checks should be made by the regulatory agency's instrument specialist assigned responsibility for the monitors. Brief notes concerning each day's initial instrument checks should be included in the main instrument evaluation/maintenance file kept in the instrument laboratory. The appropriate performance checks for each specific instrument can be found in the instruction manual supplied by the instrument manufacturer. The following common elements, however, should be checked regardless of the type of instrument:

- Leak checks including integrity of sample line and adequacy of pump operation
- Probe condition
- Battery pack status
- Detector condition
- Spare parts and supplies.

All of these checks can be made in a period of 5 to 15 minutes. The lost time and embarrassment that can be prevented by these checks, and proper calibrations and field checks more than compensates for the time spent in their performance. Repairs to the detectors, batteries, and probes usually can be accomplished quickly if a set of spare parts is kept on hand. Repeating these checks in the field is good procedure. The following subsections describe some of the elements to be checked before beginning field work.

4.5.1 Leak Checks

To leak check the probes on units with flow meters, the probe outlet should be plugged for 1 to 2 seconds while the sample pump is running. If the sample flow rate drops to zero, there are no significant leaks in the entire sampling line. If any detectable sample

flow rate is noted, further leak checks will be necessary to prevent dilution of the sample gas during screening tests. The leak checks involve a step-by-step disassembly of the probe/sample line starting at the probe inlet and working back toward the instrument. At each step, the probe/sample line is briefly plugged to determine if leakage is still occurring at an upstream location. Once the site of leakage has been determined, and the leak has been corrected, the probe is again briefly plugged at the inlet to demonstrate that the sample flow rate drops to zero. When more than one probe can be attached to the instrument body, each probe should be tested. Only those that can be sealed properly should be packed for field use.

When leaks are detected, there is sometimes a tendency to overtighten the fittings, especially those between the instrument body and the end of the sample line. With some types of fittings overtightening can damage the fitting and even lead to persistent leaks.

Units that do not have flow monitors should be leak-tested by installing a rotameter on the sample line as close as possible to the instrument body inlet. The leak-testing procedure described above can then be followed. Also, the sound of the pump should be noted, as this provides one qualitative means of identifying pluggage.

One report states that the catalytic combustion units should not be leak-tested by plugging the probe. According to this report, short-term loss of sample flow would lead to high detector temperatures and failure of the detector. One manufacturer, however, reports that the detector used on their instrument is the same as the detector used on a diffusion-controlled sampler and that the short-term loss of sample flow would not cause a significant problem. In case of doubt, the inspector should consult the manufacturer about the efficiency and safety of the procedure.

4.5.2 Probe Condition

The probes for some instruments can contain a number of independent components, especially those that dilute the sample before analysis. The physical condition of the probe should be visually checked before use. These checks include, but are not limited to:

- Presence of any deposits on the inside of the probe
- Presence of a clean particulate filter in the probe
- Condition of the orifice(s) used to control dilution air flow into the sample probe
- Condition of the "O" ring or other sealing assembly used to prevent inadvertent dilution of sample flow.

Any deposits found should be removed, or a different probe should be used. Cleaning instructions can be found in the manufacturer's operating manual. Generally, the probes are cleaned with acetone and then carefully purged of any acetone vapor before assembly.

4.5.3 Battery Pack Status Checks

The condition of the battery pack is particularly important to monitor because it can be a source of frequent problems. The battery level is normally tested by switching the instrument control to the "Battery Check" position and observing the dial setting. If the battery appears weak, a new battery pack should be installed. Most batteries fail because they have not been recharged sufficiently.

The nickel-cadmium batteries, used in many photoionization, catalytic and infrared instruments, must be charged for 8 to 12 hours for each 8 hours of operation. These batteries are very vulnerable to overcharging. Recent improvements in nickel-cadmium battery chargers, however, have substantially reduced the risk of overcharging. Despite a common misconception, the lead acid-gel batteries commonly used in FID instruments are not subject to overcharging, and they should be left on the battery pack recharger whenever the instrument is not in use.

During cold weather, weak batteries will operate for only a short period. In fact, if the unit is to be operated in cold conditions for most of the inspection day, it would be wise to bring a second battery pack along so the battery pack can be replaced at midday. At least one spare, fully recharged battery pack should be carried to every job-site.

4.5.4 Detector Condition

The detector is the key component within the portable VOC monitor. Inspectors may check the detector status by briefly monitoring an organic vapor source, such as certain fiber pens, liquid paper thinner, or a small sample bag. It is not generally advisable to monitor automobile exhaust because condensable organic compounds and particulate matter can deposit in the probe, partially plug the filters, and even damage the detector. A complete calibration is preferred over a brief qualitative response check since this shows only that the instrument will respond to organic vapors, but not that it was properly calibrated or operating as it should. FID instruments are checked by depressing the ignitor button for several seconds. If the unit will not ignite after repeated attempts, there may be problems with the batteries, ignitor, or hydrogen supply. Hydrogen leaks are less prevalent in newer instruments. Most of these problems cannot be solved immediately; therefore, another instrument should be used. Failure of the catalytic units to respond to organic vapor is often due to failure of the main detector cell, an easily replaced component. Problems of this sort should be detected before the instrument is released for field use.

4.5.5 Spare Parts and Supplies

Most of the instruments used on VOC inspections are sophisticated instruments rather than simple "off-the-shelf" items and each requires some spare parts and supplies to ensure that the inspection is not terminated prematurely. The instrument manual will have a list of recommended spare parts and supplies. At a minimum, spare battery packs, detectors, charcoal tubes and a small tool kit should be carried to the job-site. If the instrument has a chart recorder, spare pens and paper should be available, and for those instruments with optical surfaces, such as PID or NDIR, the inspector should have the equipment necessary to clean them.

If the facility to be inspected is expected to be especially dirty, the inspector should also have spare, clean probes and/or another complete instrument on hand. It is often much easier and faster to change equipment than to clean and recalibrate heavily contaminated instruments.

4.6 FIELD CHECKS

Due to the importance of obtaining accurate and valid data from inspection monitoring, several routine performance checks should be conducted during field work. These checks take very little time, and demonstrate adequate sensitivity and that the unit is continuing to perform in a proper manner. They also should be documented in the field notes. Loss of sensitivity of the monitoring instrument can happen gradually and will result in erroneously low detection levels of emissions. The following sections cover simple field checks that may indicate a loss of sensitivity.

4.6.1 Instrument Zero

The instrument zero should be rechecked whenever it has been exposed to very high organic vapor concentrations and whenever organic liquids may have been inadvertently sucked into the probe. The instrument zero should be checked at least twice a day, even when these conditions do not occur or are not suspected. It can be checked by sampling background air at a location up-wind of any possible VOC sources or by supplying some charcoal-filtered air to the analyzer. If the zero has drifted significantly, the probe particulate filter and the prefilter (if one is used) should be replaced. Also, the probe should either be cleaned or replaced. The instrument then should be recalibrated before the field work continues. It may be necessary (or at least, more efficient) to change to a back-up instrument in the case of severe contamination.

4.6.2 Instrument Response

The instrument response should also be checked routinely during field testing because all of the instrument types are vulnerable to operating problems that can result in reduced sensitivity or complete loss of response. In the case of FID's, exposure to very high VOC concentrations (above 70,000 ppmv) can lead to flame-out of the unit. It is sometimes difficult to hear the audible flame-out alarm over plant noise unless earphones (supplied with some models) are used. If the inspector fails to hear the flame-out alarm, he or she could miss a number of fugitive leaks. The catalytic combustion units are also vulnerable to problems when exposed to very high concentrations as the detector can reach temperatures high enough to cause some loss of the catalyst coating. If done repeatedly, this can also shorten the life of the detector. Exposure to lead-containing gasoline can lead

to poisoning of the detector catalyst. For these reasons, the response should be checked whenever the unit is "pegged."

Response problems of the photoionization and nondispersive infrared detectors result primarily from deposition of condensed organic compounds on the optical surface. The window should be cleaned at least once a day and whenever material might have been deposited as a result of exposure to high concentrations or entrained liquids. Unfortunately, contamination on the optical window is not always visible, but can be inferred from loss of sensitivity. Therefore, inspectors should simply assume the window is dirty and take the necessary time to clean the optics. Many instrument manufacturers recommend a solvent similar to methanol (instrument manufacturers should be contacted for specific recommendations) for routine cleaning. The special cleaning compound is mildly abrasive and is intended only for stubborn deposits that cannot be removed by more gentle methods.

Performing and documenting these routine mid-test checks will help to identify and solve problems that might compromise the integrity of the inspection if left undetected. An appropriate time to accomplish the checks is during the recommended monitoring breaks.

4.6.3 Battery Condition

In the case of some FID's, weak batteries will not have enough power to operate the ignitor, even though a proper reading was obtained during the battery check. This can be a problem after the FID has been operated for several hours and after a number of flame-outs have occurred. In many cases, weak batteries will not cause instrument failure, but will alter the response. Therefore, the instrument operator should check the battery condition several times during the day. This is excellent procedure for all battery-operated equipment, takes almost no time and can save much. Spare batteries should be kept on hand at all times for replacement as necessary.

4.6.4 Probe/Sampling Line Leakage

The probe and sampling line integrity should be checked several times a day by simply plugging the probe inlet. The flow rate indicated by the instrument flow meter (if

one is present) and the sound of the instrument should be noted. Any potential leaks should be corrected before work is continued.

4.7 QUALITY ASSURANCE

Quality assurance in this type of inspection program depends mainly on proper recordkeeping. Along with the instrument maintenance records discussed earlier, traceability of standards, instrument stability and history, and all calibrations and field checks should be carefully documented. The inspector should be aware at all times that a report of violations, especially one which supports legal action, will be subjected to careful review and that lack of documentation can prejudice such reports. The presence of such documentation, however, demonstrates the care and professionalism with which the inspector performs his work.

5.0 PRE-INSPECTION

Inspecting fugitive benzene emission sources is expensive and time consuming, therefore, thorough planning is a prerequisite for a successful inspection. Because of the numerous fugitive benzene emission sources typically located at the process unit subject to the benzene regulations, the inspector cannot monitor every source, but instead must choose a representative portion to conduct emission monitoring. Adequate preparation is essential to ensure the inspection is focused on obtaining the relevant information and data necessary to document compliance or noncompliance. The pre-inspection includes activities to help an inspector prepare for and efficiently conduct a comprehensive inspection (i.e., an inspection where all compliance related issues are covered). The pre-inspection involves:

- Facility background information review
- Development of an inspection plan
- Notifications
- Monitoring equipment
- Safety
- Reference material

Each of these elements are discussed in the following paragraphs. The objective of this chapter is to help the inspector develop, review and organize the best monitoring plan prior to conducting the inspection.

5.1 FACILITY BACKGROUND INFORMATION REVIEW

Collection and analysis of background information on the facility plays a crucial role in preparing for an inspection. A thorough search should uncover general background information, past inspection reports and the initial and semiannual reports submitted by the facility. These materials are obtained from Federal, State and local files as well as technical documents. The inspector should also review the Federal, State and local laws and regulations which dictate emission standards and control procedures for benzene.

Once the inspector possesses a good working knowledge of the benzene regulations, the facility reports and any waivers should be reviewed to determine past compliance.

5.1.1 General Facility Background Information

The following information should be collected and reviewed to give the inspector general background needed to focus the inspection.

- Names, titles and phone numbers of facility officials
- Maps showing facility location and potential environmental impacts from emissions (i.e., geographic relationship to nearby residential areas)
- Process flow charts and production information
- Production levels
- Changes or modifications at the plant facility
- Description and design data for control devices and relevant process equipment
- Emission sources
- Emission characterization
- Safety equipment requirements

5.1.2 Inspection Reports

The following reports should be collected and reviewed to give the inspector insight concerning the past, present and future compliance history of the facility.

- Federal and State and local compliance files
- Previous inspection reports (initial and semiannual)
- Correspondence between the facility, local, State and Federal agencies
- Past conditions of noncompliance
- Complaints and follow-up actions

5.1.3 Legal Records

The following legal records should be reviewed so the inspector understands the restrictions placed on benzene emissions, the required control procedures as well as the facility monitoring and reporting schedules necessary to comply with the benzene regulations.

- Applicable Federal, State and local regulations
- Most recent permits and permit applications for facility
- Special exemptions, alternative test methods and waivers
- Pending enforcement actions, compliance schedules and/or variances

5.1.4 Information Sources

To obtain the necessary facility background information, the inspector may use several information sources including files, applicable laws and regulations and technical documents. Most of the background information can be obtained from regional, state and local files. These files often contain inspection reports, compliance enforcement and litigation history, exemptions, waivers and alternative test methods applied for and granted or denied, correspondence between facility and federal and state regulatory agencies and complaints or history of remedial actions. The files also contain the permits which provide information on requirements, emission limitations, compliance schedules, monitoring, recordkeeping and reporting requirements. Permit applications, which should also be found in the files typically contain valuable technical information such as facility location and plant layout, pollutant characterization and points of emission or discharge, types of process units and the numbers of process units.

Benzene emissions are regulated by the National Emission Standards for Hazardous Air Pollutants (NESHAP) promulgated under Section 112 of the Clean Air Act. To conduct a fugitive benzene emission inspection, it is crucial that the inspector possess a good working knowledge of the applicable standards and associated background legal aspects. Provisions of the regulations that define the sources to be inspected, that describe what constitutes a leak, and detail facility monitoring inspection schedules should be particularly noted. This is especially true for the benzene standards because of the relative

complexity of the standard and the variety of compliance options that subject facilities may choose to incorporate. In addition, some State laws and regulations as well as local ordinances may stipulate more stringent benzene emission standards which apply to the same facility.

Additional information may be obtained from this manual, technical reports, documents and guidelines. These sources can provide specific information concerning up-to-date process control technology, advantages and limitation of different type of control equipment, inspection procedures and monitoring test equipment.

5.1.5 Review of Reports

Requirements under the NESHAP General Provisions (40 CFR 61.10) require affected sources to submit an initial report which includes general information about the facility. The initial report should be evaluated for completeness and any discrepancies or omissions should be documented in the inspector's report. To aid in evaluating the initial report for completeness, the inspector may use the checklist shown in Figure 5-1. The checklist is designed to target only specific information which should be included in the initial report. However, no checklist or guidance document should be relied on to replace the working knowledge of benzene emission standards and inspection procedures which an experienced inspector possesses. In order to establish whether or not the benzene NESHAP regulations are applicable to a facility, the inspector must check the initial report to determine if the facility uses or produces benzene at the stipulated level (greater than 1,000 Megagrams/year) and has equipment "in benzene service" (liquid or gas that is at least 10 percent benzene by weight). The applicability determination should also be cross-checked with air, wastewater (NPDES), hazardous waste (RCRA) and toxic substances (TSCA) permits.

The regulations also require sources to submit semiannual reports which contain detailed information about the results of facility emission monitoring programs, including the number of leaks detected and the subject equipment repairs. The inspector should identify any approved equivalent means of emission limitation, any approved alternative emission testing methods or alternative valve standards and review facility compliance. A

Figure 5-1

BENZENE NESHAP INSPECTION PREPARATION CHECKLIST

FOR INITIAL REPORTS

Initial Report Review for Completeness

40 CFR 61.10 Information

___ Name & address of the owner or operator

___ Location of the source

___ Brief Description of the facility's operation and design capacity

___ Average weight benzene or benzene related product processed per month

___ Primary emission control (e.g. flare, scrubber, incinerator)

___ Secondary emission control (if present)

___ Control efficiency

40 CFR 61.247(a) and 40 CFR 61.247(c) Information

___ Statement that requirements of standard are being implemented

___ List of all subject equipment including:

- ___ Type of equipment (e.g. valve or pump)
- ___ Process unit where equipment is located
- ___ Percent by weight benzene in the fluid at the equipment
- ___ Process fluid state at the equipment (gas/vapor, liquid two phase fluid)
- ___ Method of compliance with the standard (e.g. monthly leak detection and repair, equipped with dual mechanical seals)

___ Schedule for submitting semiannual reports (note in comments section)

Comments:

checklist designed to aid the inspector in evaluating the completeness of the semiannual reports is shown in Figure 5-2.

5.2 DEVELOPMENT OF THE INSPECTION PLAN

Due to time restraints and the typically large number of fugitive emission sources located at an affected facility, an inspection plan is essential to conducting a thorough and efficient inspection. Based on the review of the background information, a comprehensive inspection plan should be developed to address the activities and procedures which must be performed to achieve the objectives. The objective of the inspection plan is to determine facility compliance with the benzene NESHAP regulations. The plan typically consists of the tasks and procedures necessary to document the compliance determination, i.e., plant record review and inspection monitoring for fugitive benzene emissions.

5.2.1 Plant Records

Records which are required to be kept by the facility (and not reported) should be reviewed by the inspector during the on-site inspection. The inspector should determine prior to entry, what additional information needs to be obtained to document compliance. In particular, the inspector should identify missing information, incomplete data or reports and inconsistencies in the available background material and specifically seek to extract this information from on-site facility reports for the purpose of making a compliance determination. Likewise, if noncompliance is suspected, the inspector should concentrate efforts on obtaining necessary documentation for verification.

5.2.2 Inspection Monitoring

Due to the number of sources typical of most subject facilities, it will generally be impossible to inspect all the possible fugitive benzene emission sources during one inspection. Therefore, a selection of representative and priority sources must be made. Because the time available for field inspection is limited to a few hours, the inspection plan should select for emission inspection, those units that are most useful in the characterizing of the overall condition at the facility. In selecting the process units to be monitored, the inspector should consider the percent by weight of benzene in the process stream, allowable emission levels (less than 10,000 ppm or no detectable emission), the equipment repaired since the last inspection, the equipment designated as difficult to monitor or

Figure 5-2

BENZENE NESHAP INSPECTION PREPARATION CHECKLIST

FOR SEMIANNUAL REPORTS

Review of Semiannual Reports

___ Have the semiannual reports been submitted on the schedule indicated in the initial report? If not, please indicate appropriate due dates and submittal dates for late reports.

Comments:

Check the two most recent semiannual reports for completeness using the checklist below [40 CFR 61.247(b)]:

___ Process unit identification

___ Number of valves for which leaks were detected [40 CFR 61.242-7(b), 61.243-2]

___ Number of valves for which leaks were not properly repaired [40 CFR 61.242-7(d)]

___ Number of pumps for which leaks were detected [40 CFR 61.242-2(b), 61.242-2(d)(6)]

___ Number of pumps for which leaks were not properly repaired [40 CFR 61.242-2(c), 61.242-2(d)(6)]

___ Number of compressors for which leaks were detected [40 CFR 61.242-3(f)]

___ Number of compressors for which leaks were not properly repaired [40 CFR 61.242-3(g)]

___ For each improper (delayed) repair, the facts that explain the delay and, where appropriate, why a process unit shutdown was technically infeasible

___ Dates of process unit shutdowns during the semiannual reporting period

___ Revisions to items submitted in the initial report if changes have occurred during the reporting period

___ The results of all performance tests conducted during the reporting period on all equipment that are designated to meet the "no detectable emissions" compliance option [40 CFR 61.242-2(e), 61.242-3(i), 61.242-4(a), 61.242-7(f), 61.242-11(f)]

___ The results of all performance tests conducted during the reporting period on valves that are designated to meet the "allowable percentage of valves leaking" compliance option [40 CFR 61.243-1]

___ The results of all performance tests conducted during the reporting period on valves that are designated to meet the "skip period leak detection and repair" compliance option [40 CFR 61.243-2]

Comments:

Note: Remember to bring a copy of at least one semiannual report on the inspection so that the semiannual report data can be spot checked against the in-plant records data.

unsafe to monitor and any approved alternative method of limiting fugitive benzene emissions. Generally, the most probable "leakers" should be targeted for emission evaluation. The following factors should be considered to select equipment items for leak inspections:

- specific components identified as leakers in the past,
- type of service (e.g., gas or liquid),
- type of component (e.g., valves, pumps, flanges, relief valves),
- pressure of line,
- temperature of line,
- specific design of component (e.g., type of pump seal, type of valve, type of valve pack),
- age of equipment or component,
- volatility of specific organic compound(s) being handled.

The optimum field survey strategy focuses the primary monitoring emphasis on the following: 1) those components of process areas with a demonstrated history of high leak rates, 2) valves in gas and light liquid service, and 3) pumps in light liquid service. As part of the pre-inspection, the inspector should prepare a monitoring survey log sheet for each selected process unit. An example of a survey log sheet for identifying leaking components is shown in Figure 5-3.

5.3 NOTIFICATION

The facility management should be contacted generally one day before the inspection date unless a surprise inspection is intended. Federal inspectors should also notify appropriate State and/or local air pollution control agencies. Notification may be by telephone or letter and should include the purpose of the inspection. The inspection date and time should be set, the assistance of specific plant personnel arranged and the facility management informed to prepare or make available specific information at the time of inspection. The facility representative notified should have the authority to release data and samples and to arrange for access to conduct the inspection. Additionally, the inspector should request information about on-site safety regulations and necessary safety equipment. When additional facility information is requested prior to the inspection, a

FIGURE 5-3

MONITORING SURVEY LOG SHEET

Leak Detection and Repair Survey Log

Process unit _____ Instrument operator _____

Analyzer _____

Component	Stream composition		Tag number	Date leak located	Date maintenance performed	Component recheck after maintenance	
	Gas	Liquid				Date	Analyzer reading (ppmv)

letter may be used for notification purposes. Some of the common information requested by a notification letter includes:

- Raw materials, products, by-products and production levels
- Facility layout maps which identify process areas and discharge or emission points
- Flow diagrams for processes
- Description and design of pollution control and treatment systems
- Operation and maintenance problems that may cause violations of emission limitations
- Recent self-monitoring reports and inventories for discharges and emissions
- Files of required reports and records.

A careful search of available background information should be conducted to avoid requesting duplicate information. When requesting material, the facility should be informed of its rights to assert a claim of confidentiality (40 CFR 2.203).

5.4 MONITORING EQUIPMENT

The pre-inspection preparation includes selecting and calibrating inspection monitoring equipment. The type of equipment best suited to performing the inspection monitoring will vary according to the individual facility, and must be chosen carefully to ensure the test results will be reliable and useful. The four types of monitoring devices for Method 21 are: flame ionization, photoionization, infrared absorption and catalytic combustion. Table 4-1 identifies the advantages and limitations of each type of monitoring equipment.

Selection of the appropriate inspection monitoring equipment will be dependent on the individual facility process streams, control equipment and plant safety requirements. The pre-inspection review of background material should include determining whether the materials handled are toxic, the process conditions (i.e., temperature, pressure, percentage of benzene and maximum leak potential) and the different types of equipment to be monitored.

Prior to the inspection, the monitoring equipment should be pre-checked and calibrated to ensure equipment performance and accuracy in the field. Chapter 4 discusses in detail the pre-check and calibration procedures for the four types of monitors. It is a good idea to obtain backup instrumentation so that the inspection can be conducted without interruptions and delays due to nonoperational monitoring equipment or on-site problems.

5.5 SAFETY

Safety equipment required by the facility should be identified during the notification phone call or requested in the notification letter. Safety equipment should be checked and assembled prior to leaving for the facility to assure the safety of the inspector and to avoid being denied entry at the facility due to lack of and/or improper equipment. If the plant does not mandate personal protective equipment, the inspector should assemble, at a minimum, long-sleeved clothing made of natural fibers, a hard hat, safety shoes, safety glasses, ear plugs and a half-face chemical cartridge respirator. The cartridge should be replaced daily and whenever any odor or taste is noticed.

5.6 REFERENCE MATERIAL

As part of the pre-inspection the inspector should reproduce (preferably two-sided) all of the written material required during the inspection. Generally, these reference documents may include any or all of the following:

- Maps
- Flowcharts
- Plant layout
- Copies of regulations, waivers and test methods
- Inspection checklists and monitoring survey log sheets
- Inspection plan or agenda
- Additional facility information
- Lists of questions or items to check against facility in-plant records
- Inspectors notebook

6.0 INSPECTIONS

The purpose of the inspection is to document overall facility compliance with fugitive benzene emission limitations, leak monitoring procedures by plant personnel, and facility reporting and recordkeeping requirements. The inspectors must conduct the inspections in accordance with the Agency policies and procedures pertaining to protocol, handling of confidential information and all applicable safety rules. Also, it is the inspector's responsibility to collect factual, valid information and data which document the compliance determination and which are supportable and admissible for use in any subsequent enforcement action. This chapter presents inspection safety considerations, inspector's responsibilities in addition to the basic activities and leak monitoring techniques involved in the facility inspection process.

6.1 SAFETY

Based on studies linking occupational exposure to benzene with leukemia, EPA listed benzene as a hazardous air pollutant on June 8, 1977. Because benzene is a cumulative poison and recognized carcinogen, extreme care must be taken by inspectors to minimize or eliminate exposure. Conducting field leak detection inspections always subjects the inspector to a degree of risk. The objective of this section is to describe ways to minimize these risks through proper selection of protective equipment, and by following health and safety plant procedures and safe monitoring practices.

When facility conditions demand personal protection equipment, the inspector must know how to select and use this equipment as well as appreciate the limitations of the equipment. Any protective clothing, facial hair restrictions, ear plugs and protective equipment requirements must be established and preparations made for prior to leaving for the field inspection. All safety equipment, especially respirators should be checked out to confirm that they are in good working condition. The proper safety shoes should be worn for the existing plant conditions.

Safe inspection practices begin with a full understanding and respect for potential hazards. Before entering the process areas, the inspector should discuss potential

hazardous conditions within these areas with the appropriate plant representatives. The inspector should insist that someone from the plant accompany him or her at all times to ensure that the inspector does not inadvertently enter unsafe areas, to assist the inspector in the event of accidental gas releases within the facility, to get help if the inspector is injured, and to provide general assistance and advice regarding safety.

During the field leak monitoring inspection, the inspector should use the portable VOC detector to help determine if conditions are safe. Half-face cartridge-type respirators for organic vapors are limited to maximum concentrations of 50 ppmV. Typically, this concentration would be exceeded in the very localized area where the inspector is holding the instrument probe. Also, inspectors should avoid entering poorly ventilated areas which may have organic vapor concentrations in the breathing zone that are above the concentration limits of the respirator.

Inspectors should also be cognizant of the potential for heat stress. The physical exertion of carrying the portable analyzer, coupled with exposure to hot process equipment can lead to heat stress. Drinking plenty of fluids and scheduling rest breaks will greatly reduce the risk. Breaks are an ideal time to check the response of the portable leak detection instrument or to conduct other performance checks.

Safety should always be considered during field monitoring. Some components might be considered unsafe to monitor because process conditions include rotating equipment and hot surfaces. When using a portable VOC detector, the following safety practices are suggested:

1) Do not place a rigid probe near a moving part such as a rotating pump shaft. A short, flexible probe extension tip may be used.

2) Do not place the umbilical cord from the detector on a heated surface such as a pipe, valve, heat exchanger, or furnace.

3) Do not place the umbilical cord from the detector near rotating equipment such as pump shafts.

Some components may be difficult to reach because they are located in elevated areas. Occasionally these components might be reached by using a ladder or scaffolding. The inspector should avoid monitoring any component which is elevated more than six feet above permanent support surfaces. No heroics should be attempted in order to monitor the component.

Also, each plant will have its own safety procedures. These procedures may involve restrictions on the use of tools in certain areas. Before inspecting any facility, the safety officer should be contacted.

6.2 INSPECTOR'S RESPONSIBILITIES

The primary responsibility of inspectors is to gather the information needed to determine facility compliance with the applicable Federal, State and local regulations. To accomplish this task, the inspector must adhere to both legal, and procedural guidelines. Strict adherence to these guidelines is essential in order to collect valid information during the inspection.

6.2.1 Legal Responsibilities

It is the inspector's legal responsibility to protect trade secrets and confidential information from public disclosure as stated in Section 114(c) of the Clean Air Act. Confidential information from the inspectors standpoint may be defined as information concerning or relating to trade secrets, processes, operation, style of work, apparatus, confidential statistical data, amount or source of any income, profits, losses or expenditures which the facility discloses as confidential. The facility is entitled to make a declaration or claim of confidentiality for all information that an inspector has access to or requests. It is the inspector's responsibility to inform facility officials during the opening conference of their rights regarding confidentially claims. Information which the company is claiming confidential must be stamped or typed with a notice such as "trade secrets", "Proprietary", or "confidential business information". Alternatively, a cover sheet containing the same wording may be attached to the confidential information.

6.2.2 Procedural Responsibilities

The inspector must rely on taking physical measurements, reviewing records and observing facility operation to provide the evidence required to support a determination of compliance. The inspector must adhere to the general inspection procedures for gathering and documenting evidence to avoid the possibility of endangering any future legal proceedings on procedural grounds.

Documentation in general refers to all print material produced, copied, or taken by the inspector to provide evidence of facility compliance status. This documentation may include the inspector's field notebook, checklists, drawings, flow sheets, maps, statements, copies of records, printed material and photographs. It is important that the inspector recognize the possibility that any documents gathered or produced during the course of the inspection may eventually become part of an enforcement proceeding and assume the responsibility of ensuring that all such documents can withstand legal scrutiny.

A vital part of the documentation material is the inspector's field notebook. Because the government's case in a civil or criminal prosecution depends on the evidence gathered by the inspector, it is important that the inspector keep detailed records for each inspection. The field notebook may be used to form the premise of the inspector's report and as evidence in legal proceedings, therefore it is critical that the inspector substantiate the facts with tangible evidence i.e., pertinent observations, photographs, copies of documents, descriptions of procedures, unusual conditions, problems and statements from facility personnel. The field notebook will not remain in the inspector's possession but becomes part of the Agency's files, although copies may be made for the inspector.

6.3 FACILITY INSPECTIONS

The facility inspection is divided into five major activities, namely; entry, initial interview, evaluation of the leak monitoring program, record review, and closing interview. The following procedures are typically followed during an inspection. Most of these procedures are common to all inspections. At the inspector's discretion, however, emphasis may be given to any particular procedure(s) which will aid in making a compliance determination of the facility.

6.3.1 Entry

The Clean Air Act establishes the inspector's authorization to enter a plant for the purpose of inspection. Upon presentation of credentials, the inspector is legally authorized to enter into the plant to inspect any monitoring equipment or methods, conduct leak screening tests and access any records required to be maintained at the site. Two important considerations of plant entry are the arrival and obtaining the consent to conduct the inspections.

6.3.1.1 Arrival

The inspectors should arrive at the facility during normal working hours. Unless previously instructed otherwise, the inspector should enter through the main gate and immediately locate the plant official who was contacted during the pre-inspection facility notification process. Upon meeting the appropriate plant official, the inspector should introduce himself or herself as an inspector and present the proper credentials. The credentials must be presented whether or not identification is requested by the plant official.

6.3.1.2 Consent

Consent to inspect the plant premises must be given by the owner, operator or his representative at the time of the inspection. If the inspector is allowed to enter the premises, the entry is considered to be voluntary and consensual, unless the inspector is expressly told to leave the premises. Expressed consent is not mandatory; absence of an expressed denial constitutes consent.

6.3.2 Initial Interview

Once the inspector has identified himself or herself and been granted entry onto the plant site, the initial interview should be conducted. The objective of the interview is to inform the facility official(s) of the purpose of the inspection, the authority under which it will be conducted, and the procedures which are to be followed. A successful initial interview will aid in obtaining cooperation of the plant officials in providing relevant information and assistance. The initial interview should cover the following items:

- Inspection Objectives. The inspector should provide an outline of inspection objectives to inform the plant officials of the purpose and scope of the inspection and prevent misunderstandings.
- Inspection Agenda. The agenda will help eliminate wasted time by allowing officials to make necessary arrangements for gathering information, and conducting calibration and monitoring procedures.
- Facility Information Verification. The inspector should verify or collect the following information: the correct name and address of facility; the correct names of plant management and officials; the principal product(s); and the locations of major emission points.
- List of Records. A list of all records to be inspected during the initial conference will allow plant officials ample time to gather material.
- Accompaniment. Regulations stipulate that a facility official accompany the inspector during the inspection to provide process and operation information, identify confidential data and for safety and liability considerations.
- Safety Requirements. The inspector should inquire about plant safety regulations and procedures that he or she should follow while conducting the inspection. He or she should become familiar with emergency warning signals and plant evacuation procedures.
- Meeting Schedules. The inspector should schedule interviews with key plant personnel to allow them an opportunity to re-arrange their activities to accommodate the interview.
- Closing Conference. A specific time should be scheduled for the post-inspection meeting to allow inspectors a final chance to obtain information, and allow facility officials to ask questions and make confidentiality declarations before leaving the premises.
- Simultaneous Measurements. Plant officials should be informed of their rights to conduct their own simultaneous benzene emission measurements.
- Confidentially Claims. Plant officials should be advised of their right to request confidential treatment of trade secret information.

6.3.3 Evaluating the Facility Leak Monitoring Program

The key element of the facility inspection is evaluating the leak monitoring program. This activity includes observing facility personnel calibrate leak detection equipment, observing facility personnel perform limited leak detection monitoring on each type of equipment subject to the benzene standard, and spot-checking a representative sample of equipment sources for leaks. By performing spot-checks for leaks and observing plant personnel conduct calibrations and leak detection monitoring, the inspector verifies compliance with the leak detection program required by 40 CFR 61.245 as well as demonstrates to the regulated industry the agency's determination to actively pursue continuous facility compliance with the regulations.

6.3.3.1 Observation of Calibration Procedures

The calibration procedures and leak detection monitoring should be performed by the facility personnel who are responsible for the routine monitoring. The inspector should document the plant's ability to properly implement the standard. The instruments used to determine compliance of facilities must be calibrated on a routine basis. The calibration precision tests, response time and response factor tests reveal whether the instruments are operating properly for the specific applications. The inspector should witness the calibration procedures and note any deviations from Method 21. The Method 21 calibration requirements are:

- The instruments should be calibrated daily with two calibration standards, zero air and a calibration gas.
- The gas concentration used for calibration should be close to the leak definition concentration.
- The calibration gas should be methane or n-hexane, certified to be accurate within 2 percent and within the specified self life.
- If gas blending is used to prepare gas standards, it should provide a known concentration with an accuracy of plus or minus two percent.
- The zero air used for calibration should be certified to contain less than 10 ppm of hydrocarbon in air and within the specified shelf life.

A number of other factors can be important such as: probe cleanliness, probe leakages, gas flow rates, improper warm-up period, incorrect zero or meter adjustment. If the meter readout cannot be adjusted to the proper value, a malfunction of the analyzer is indicated and corrective actions are necessary before using the analyzer. The inspector should verify that the correct calibration gases are used and that the gases are within the proper range. The inspector should record the instrument response time, response factors and calibration precision tests.

6.3.3.2 Observing Leak Detection Monitoring By Plant Personnel

The inspector should also observe the plant personnel's technique in performing actual leak detection measurements. The plant personnel should be able to correctly monitor fugitive benzene emissions from all the equipment types at the plant site. Additionally, the plant personnel should be able to correctly determine background concentrations. Any deviations from Method 21 procedures should be noted. Techniques for correctly monitoring certain equipment items are described in the following paragraphs.

Fugitive leaks from valves occur primarily from the valve stem packing gland. This packing material is intended to seal the process gas and/or liquids from the atmosphere. As the packing lubricant is lost or the packing material wears, some volatilization or organic vapors is possible. For these types of valves, the emissions are monitored at the point where the valve stem leaves the packing gland. The normal procedure is to circumscribe the valve stem with the probe held at the stem-packing gland interface. Maintaining such a close proximity to the stem is necessary in order to obtain an accurate measurement because of the relatively poor capture effectiveness inherent in the probe design. The presence of a strong cross-draft caused by ambient wind further reduces the probe capture capability. For these reasons the proper placement of the probe is critical. It should be noted, however, that this monitoring requirement dictates that the inspector position himself or herself in the immediate vicinity of the leak because most probes are relatively short in length. To minimize inhalation hazards, the inspector should terminate any monitoring when the concentration of organic vapor in the breathing zone exceeds the maximum safe concentration of his or her specific respirator.

Valves used on the ends of drains or sample lines have two sources of leakage, the valve stem and the valve seat. Most sources use a double valve arrangement or incorporate a blind flange to protect against emission losses through the valve seat of the main shutoff valve. To confirm the adequacy of the drain or sampling line seal, the probe is usually placed at the center of the discharge pipe.

Fugitive emissions from pumps occur from the pump shaft seal used to isolate the process fluid from the atmosphere. The most commonly used seals are single mechanical seals, double mechanical seals, and packed seals. Monitoring should be executed within one centimeter of the seal and the rotating shaft. A rigid probe tip should not be used near the rotating shaft because it could break if the inspector were not able to hold the probe absolutely steady during the measurement. A flexible tip is usually added to the end of the rigid probe when sampling pumps. If the housing configuration prevents a complete traverse of the shaft periphery, sample all accessible portions. Sample all other joints on the pump or compressor housing where leakage could occur.

Most pump shafts have shaft guards that protect against entrapment in the rapidly rotating shaft. With some instruments, it is difficult to reach through the guard to the location of the shaft and shaft seal. The guard should not be removed under any circumstances, and those pumps without guards should be approached very carefully.

Care must be exercised when monitoring sources, such as valves and pumps, that handle heavy liquid streams at high temperatures. Relatively nonvolatile organic compounds can condense in the probe and detector. Both the instrument response to the emissions and the instrument return to zero may be slowed due to the condensation of these compounds. For fugitive VOC sources that have a highly variable leak rate, the maximum sustained concentration or maximum repeated concentration observed should generally be recorded.

Fugitive leaks from flanges or other connectors typically occur at the flange or connector sealing interface. For welded flanges, the probe should be positioned at the outer edge of the flange – gasket interface and monitoring should be conducted over the entire circumference of the flange. Emissions from all other connectors should be monitored with a similar traverse.

In most cases, the configuration of pressure relief devices prevents sampling at the sealing seat interface. However, for those pressure relief devices equipped with an enclosed discharge pipe, extension or horn, the sample probe inlet should be placed at the approximate center of the exhaust area relative to the atmosphere.

Certain fugitive leak sources are subject to a "no detectable emission" regulation, i.e. the difference between the background organic vapor concentration and the concentration downstream of the source should not be greater than 500 ppmV. The background concentration is determined by placing the probe 1 to 2 meters upwind of the source. If other equipment interferes with the background measurement, the upwind monitoring location can be as close as 25 centimeters.

The facility leak monitoring program checklist shown in Figure 6-1 should help the inspector assess the plant's ability to carry out the work practice requirements specified in the regulations. The inspector should note problems, including the need for further monitoring training.

6.3.3.3 Spot-Check By Inspector

The inspector should spot-check a few equipment items in benzene service for leaks, improper identification, improper tagging, or other noncompliance. Under no circumstances should the inspector conduct the leak screening tests without the aid of plant personnel familiar with the hazardous areas of the plant site. Because of the large number of potential fugitive benzene emission sources, the inspector should concentrate the field monitoring on the following:

1) Recently leaking devices
2) "No detectable emission" devices
3) Closed vent systems and control devices (insure compliance with minimum temperature, residence time, efficiency and no detectable emissions)
4) Flares (no visible emissions as determined by Reference Method 22)
5) Exempt devices (verify compliance)

FIGURE 6-1

FACILITY LEAK MONITORING PROGRAM CHECKLIST

Request a demonstration of the portable hydrocarbon detector calibration procedure. Document any deviations from Method 21.

Be sure to record:

___ Make and Model of the portable hydrocarbon detector(s)

___ Type of calibration gas (methane/n-hexane) and how it is prepared or purchased

Comments:

Have the responsible plant personnel demonstrate use of the detector in the field. Are the plant personnel familiar with the standard? Assess the plant's ability to carry out the work practice requirements specified in the regulations.

Comments:

The data obtained by inspectors must be of the highest quality reasonably possible because this data will be used to determine the compliance status of the facility. Therefore, adequate time should be allocated for the leak detection equipment span checks, response checks, and zero gas checks during the leak monitoring procedures.

While spot-checking equipment for leaks, the inspector should also verify equipment identification numbers and the proper marking of leaks (tags should be weatherproof and visible). The equipment and leak identification checklist shown in Figure 6-2 may be used in conjunction with the pre-inspection selection of equipment for leak testing. Additionally, the inspector should evaluate each standard (i.e., valve, sampling connection) individually during the inspection. Equipment pieces may not fit neatly into a single category but instead may be subject to more than one benzene equipment standard. For example, an open-ended valve on a sampling connection system may be concurrently subject to three standards; the valve standard, the open-ended valve standard and the sample connection system standard.

Furthermore, the inspector should be aware of the common potential leak screening detection problems and the necessary precautionary or corrective measures. Some of these common problems are described in the following paragraphs.

The most typical monitoring problem encountered during inspection is locating the exact site of a leaking source because once emitted, organic vapors are quickly dispersed. To alleviate the problem, the probe should be positioned perpendicular to the source and rotated very slowly while simultaneously observing the analyzer meter. Unless the probe is positioned directly in line with the emission plume, detection will be difficult.

Several organic vapor analyzer problems can be caused by monitoring gases with high VOC concentrations. At hydrocarbon concentration above 70,000 ppmv, flame-out of flame ionization detectors can occur. High concentrations of hydrocarbons can lead to very high detector temperatures and the loss of catalyst in catalytic units. Condensation of a portion of these high concentration vapors on photoionization unit lamp windows can reduce the sensitivity of the instrument. The condensation of material in the probe and sampling lines can be a problem for all types of instruments. For these reasons, the inspector should monitor the hydrocarbon concentration while slowly approaching the

FIGURE 6-2

EQUIPMENT AND LEAK IDENTIFICATION CHECKLIST

Spot check equipment for proper identification numbers and leak identification [40 CFR 61.242-(1)(d) and 61.246(b)].

___ Pumps [40 CFR 61.242-2]

Equipment ID No.:

___ Compressors [40 CFR 61.242-3]

Equipment ID No.:

___ Pressure relief devices [40 CFR 61.242-4]

Equipment ID No.:

___ Sampling connection systems [40 CFR 61.242-5]

Equipment ID No.:

___ Open ended valves or lines [40 CFR 61.242-6]

Equipment ID No.:

FIGURE 6-2

EQUIPMENT AND LEAK IDENTIFICATION CHECKLIST (CONTINUED)

___ Valves [40 CFR 61.242-7]

Equipment ID No.:

___ Pressure relief devices in liquid service, flanges and other connectors [40 CFR 61.242-8]

Equipment ID No.:

___ Product accumulator vessels [40 CFR 61.242-9]

Equipment ID No.:

* Is the above equipment marked in such a manner that it can be distinguished readily from other pieces of equipment [40 CFR 61.242-1(d)]?

** Be sure to record the monitored CVSCD parameters as specified in the Control Device Checklist.

Comments:

valve stem, pump shaft seal or other source. If the instrument gauge indicates a high concentration, the specific leak site should be approached very carefully. In some cases, the concentration will exceed the leak definition even before the probe is placed close to the leak site. Obviously, in these cases, there is no need to move the probe closer and risk affecting the performance of the detector. Furthermore, there is nothing to be gained by maintaining the probe at the leak site for two times the response time (a general rule) if the instrument already indicates a concentration above the leak.

The organic vapor analyzer probe should never be placed in direct contact with liquids during the monitoring of fugitive emissions. A portion of the liquid could be pulled into the probe which may damage the instrument detector. If there is contact with liquid, it may be necessary to clean and/or repair the instrument.

6.3.4 Record Inspections

The primary objective of the record inspections is to minimize fugitive benzene emissions through requiring adherence to the reporting and recordkeeping requirements of 40 CFR 61.246 and 61.247. From pre-inspection activities the inspector should already possess a general understanding of the plant under investigation, the processes employed, the products produced in addition to being familiar with all applicable regulations and knowing what type of information is required to determine compliance with each. This knowledge is necessary to help select those units suspected or detected as being compliance problems and to help avoid giving unnecessary attention to items in compliance or not covered by compliance regulations. The inspector, after conducting the facility leak monitoring portion of the inspection, should have a better understanding of the facility layout and its program, as well as having identified specific equipment tagged for repair which can be checked during the record review. The inspector should seek to screen the records for key data necessary to document compliance with the regulations. The types of data that are suggested for review are in-plant logs and semiannual reports.

The facility's in-plant records should be examined to determine compliance with the recordkeeping requirements in 40 CFR 61.246. The information recorded should be complete and maintained in an organized format. The in-plant records checklist shown in Figure 6-3 identifies the information which facilities are required to record

FIGURE 6-3

IN-PLANT RECORDS CHECKLIST

40 CFR 61.246(c) - Does the plant have the following information in a two year log regarding leaks located on pumps (40 CFR 61.242-2), compressors (40 CFR 61.242-3), valves (40 CFR 61.242-7), liquid SRV's, flanges, and other connectors (40 CFR 61.242-8)?

___ The instrument and operator identification numbers and the equipment identification number.

___ The date the leak was detected and the dates of each attempt to repair the leak.

___ Repair methods applied in each attempt to repair the leak.

___ "Above 10,000 ppm" if the maximum instrument reading measured by the methods specified in 40 CFR 61.245(a) after each attempt is equal to or greater than 10,000 ppm.

___ "Repair delayed" and the reason for the delay if a leak is not repaired within 15 calendar days after discovery of the leak.

___ The signature of the owner or operator (or designate) whose decision it was that repair could not be effected without a process shutdown.

___ The expected date of successful repair of the leak if a leak is not repaired within 15 calendar days after discovery of the leak.

___ The date of successful repair of the leak.

* 40 CFR 61.246(b) specifies tagging requirements for leaks of the above listed type. Select a few recently detected leaks to field check for proper tags and place them on the appropriate portion of the Equipment and Leak Identification Checklist.

** Are there any general comments regarding the frequency and duration of delayed leak repairs?

Comments:

FIGURE 6-3

IN-PLANT RECORDS CHECKLIST (CONTINUED)

40 CFR 61.246(d) - Does the plant have the following information pertaining to their closed vent system and control device (CVSCD) in a permanent log?

___ Detailed schematics, design specifications, and piping and instrumentation diagrams.

___ The dates and description of any changes in the design specifications.

___ A description of the parameter or parameters monitored [see 61.242-11(e)] to ensure that the control device is operated and maintained in conformance with its design and an explanation of why that parameter (or parameters) was selected for monitoring.

___ Periods when the CVSCD is not operated as designed. This includes periods when vents that should be controlled are bypassed to the atmosphere, a flare pilot does not have a flame, etc.

___ Dates of startups and shutdowns of the CVSCD.

* A separate checklist for control devices, Figure 6-2 is attached to gather the data needed to make a preliminary determination of whether the CVSCD conforms with the requirements of 40 CFR 61.242-11. These requirements depend on whether the control device is a vapor recovery system, an enclosed combustion device, or a flare.

Comments:

40 CFR 61.246(i) - Does the facility have the following information pertaining to equipment which is exempt from the benzene NESHAP [see 40 CFR 61.110(c)(1)] recorded in a log?

___ An analysis demonstrating the design capacity of the process unit.

___ An analysis demonstrating that equipment is not in benzene service.

Comments:

FIGURE 6-3

IN-PLANT RECORDS CHECKLIST (CONTINUED)

40 CFR 61.246(e) - Does the plant have the following information pertaining to subject equipment in a permanent log?

___ A list of identification numbers for equipment subject to the standard:

- ___ Pumps [40 CFR 61.242-2]
- ___ Compressors [40 CFR 61.242-3]
- ___ Pressure relief devices in gas/vapor service [40 CFR 61.242-4]
- ___ Sampling connection systems [40 CFR 61.242-5]
- ___ Open ended valves or lines [40 CFR 61.242-6]
- ___ Valves [40 CFR 61.242-7]
- ___ Pressure relief devices in liquid service, flanges and other connectors [40 CFR 61.242-8]
- ___ Product accumulator vessels [40 CFR 61.242-9]
- ___ CVSCD [40 CFR 61.242-11]

___ A list of identification numbers for equipment designated to meet the "no detectable emissions" compliance option including the owner/operator's authorizing this designation:

- ___ Pumps [40 CFR 61.242-2(e)]
- ___ Compressors [40 CFR 61.242-3(i)]
- ___ Valves [40 CFR 61.242-7(f)]

___ A list of identification numbers for pressure relief devices which are required to meet the "no detectable emissions" standard [40 CFR 61.242-4(a)].

___ The dates of each "no detectable emissions" compliance test, including the background level measured during each test and the maximum instrument reading measured at the equipment during each test.

- ___ Pumps [40 CFR 61.242-2(i)
- ___ Compressors [40 CFR 61.242-3(i)]
- ___ Valves [40 CFR 61.242-7(f)]
- ___ Pressure relief devices [40 CFR 61.242-4(a)]

___ A list of identification numbers for equipment in vacuum service [which are exempt per [40 CFR 61.242-1(e)].

Comments:

FIGURE 6-3

IN-PLANT RECORDS CHECKLIST (CONTINUED)

40 CFR 61.246(f) - Does the plant have the following information in a permanent log?

___ A list of all valves which are designated "unsafe to monitor" as outlined in 40 CFR 61.242-7(g).

- ___ Valve identification numbers
- ___ Explanation why each valve is unsafe to monitor
- ___ A plan for monitoring each valve

___ A list of all valves which are designated "difficult to monitor" as outlined in 40 CFR 61.242-7(h).

- ___ Valve identification numbers
- ___ Explanation why each valve is difficult to monitor
- ___ A plan for monitoring each valve

* One or two of these valves may be field inspected to verify that they are unsafe or difficult to monitor.

Comments:

40 CFR 61.246(g) - For valves complying with the "skip period leak detection and repair" compliance option [see 40 CFR 61.243-2], does the plant have a permanent log containing:

___ A schedule for monitoring.
___ The percent of valves found leaking during each monitoring period.

40 CFR 61.246(h) - Pumps and compressors that are equipped with a dual mechanical seal system pursuant to 40 CFR 61.242-2(d) or 40 CFR 61.242-3(a) must have sensors to detect failure of the seal system, the barrier fluid system, or both. The following information should be in a permanent log regarding these types of pumps and compressors:

___ For each pump, the design criterion (or parameter chosen to monitor) and an explanation of that criterion [40 CFR 61.242-2(d)(5)].

___ For each compressor, the design criterion (or parameter chosen to monitor) and an explanation of that criterion [40 CFR 61.242-3(e)(2)].

- ___ Any changes to this criterion and the reasons for the changes.

Comments:

in logs. The information contained in the control device checklist, Figure 6-4, may be used to help inspectors evaluate control device compliance with 40 CFR 61.242-11.

Examination of the logs may also reveal noncompliance due to improper or inadequate recording procedures. Facilities are in direct noncompliance under the following situations:

- o failure to report leaks and dates of repairs
- o failure to report the reason for delaying repair of leaks past an allotted time frame
- o failure to develop a schedule to observe visual emissions from flares
- o failure to perform emission testing for control devices (except in the case of flares)
- o failure to record periods when the control device is not operating

The in-plant logs and records should be examined for inconsistencies with the information presented to the regulatory agencies in the initial and semiannual reports (40 CFR 61.247). Some typical reporting inconsistencies are as follows:

- o facilities records leak testing and repair data in logs but fails to report information in semiannual reports
- o facility records periods of noncompliance for control and vent systems but only reports results of annual emission tests

The following is a list of questions the inspector should be able to answer at the conclusion of the record inspection:

1) Are in-plant records being properly kept and are semiannual reports being properly submitted?

FIGURE 6-4

CONTROL DEVICE CHECKLIST

What type of control device is used in the facility's CVSCD?

___ Vapor recovery (condensers, adsorbers, absorbers)

___ Enclosed combustion (incinerators, boilers)

___ Flares

* Use the questionnaire/checklist below that is specific for the type of control device to gather data to assess compliance with 40 CFR 61.242-11.

Comments:

Vapor Recovery Systems 40 CFR 61.242-11(b):

___ Compression/refrigeration, condensation

___ Adsorption (e.g. carbon bed filters)

___ Absorption (e.g. wet scrubbers)

Describe the control device and the critical parameters which demonstrate compliance (e.g. adsorber pressure drop/regeneration cycle time; scrubbing fluid flow rate/pressure drop; final temperature leaving condenser). What is the claimed control device efficiency? Is this efficiency measured (tested) or calculated? Obtain a copy of these test results or calculations. What are the critical control device operating parameters during the inspection (from the field or control room)?

FIGURE 6-4

CONTROL DEVICE CHECKLIST CONTINUED

Enclosed Combustion Device 40 CFR 61.242-11(c):

___ Incinerator

___ Boiler

What is the claimed control device efficiency? Is the efficiency measured (tested) or calculated? Obtain a copy of any of these test results or calculations. What is the combustion temperature during the inspection (from the field or control room)?

Flares 40 CFR 61.242-11(d):

___ Steam Assisted

___ Air Assisted

___ Non-Assisted

During normal operation, what is net heating value and exit velocity of the flare gas? Is the velocity and net heating value of the flare gas measured (tested) or calculated? Obtain copies of these test results and/or calculations. Check the flame indicating device (probably a thermocouple readout) in the field or control room for proper operation. Observe the flare for visible emissions.

2) Is all equipment in the facility that should be subject to the standard being treated as such?

3) Does the facility's closed vent system and control device (CVSCD) meet the requirements of 40 CFR 61.242-11?

4) When detected leaks are not repaired in the required time frame, are the delays justifiable in accordance with the provisions of 40 CFR 61.242-10?

6.3.5 Closing Conference

The closing conference is held with the facility personnel at the conclusion of the record and leak screening inspections. The conference is mainly designed to answer questions the facility may have, identify confidential information, and obtain last minute details and information in order to complete the mandatory inspection report. The inspector should keep the closing conference brief, refrain from making compliance judgements and cover the following topics:

- Review of Inspection Data - identify and fill in any gaps in the data collected and clear up any inconsistencies concerning technical data.
- Discussion - answer any inspection-related question from the facility personnel but politely refrain from making on-the-spot judgements concerning facility compliance or enforcement consequences.
- Declaration of Confidential Business Information - facility officials should be given the opportunity to make confidentiality claims on documents collected by the inspector. It is the inspector's responsibility to note all information claimed confidential and handle the materials accordingly.

As a final note, it should be emphasized that it is the inspector's responsibility to establish and maintain a working relationship with the facility. Offering or suggesting available resources such as technical guidelines, referring questions and concerns to other EPA personnel and discussing problems and possible solutions will indicate to the facility a professionalism that will reflect favorably on the inspector and the agency.

7.0 POST INSPECTION

Upon completion of the compliance inspection, the inspector begins the final task of determining facility compliance. The facility data contained in the initial report, the semiannual reports, as well as results of the facility record review and the inspection provide the inspector with the information to determine facility compliance with the regulations. Additional information, elaboration or clarification may come from the inspector's field notebook. The elements of the inspector's report, the overall facility compliance determination and the handling of confidential business information are presented in the following paragraphs. Although each inspector and agency may use somewhat different reporting format and confidential business information procedures, the inspector must still present the findings and support the compliance determination in a clear, concise manner.

7.1 WRITING THE REPORT

After returning from the inspection site, the inspector should begin preparing his inspection report while all the events of the inspection are still fresh in his mind. The inspector should prepare the report before he or she conducts another benzene leak detection inspection. When two or more inspections are done at one time, it becomes difficult to mentally separate one from another. Also, the inspector should call the facility to clarify any item about which he or she is uncertain. The inspector's report organizes and correlates all evidence gathered during the inspection into a concise and useable format. The report serves to record the procedures used in gathering the data, gives factual observations and evaluations drawn in determining facility compliance with the NESHAP regulations for benzene. The inspector's report will also serve as part of the evidence for any enforcement proceeding or compliance-related follow-up activities.

The inspection results are to be organized in a comprehensive, objective and accurate report. In preparing an inspection report, confidential material must be treated with care and included only if relevant to the compliance discussions. A standardized format for the inspector's report is recommended to enable accurate and efficient reviews. In addition, adopting a standardized reporting format emphasizes completeness through

uniformity of data presentation, promotes better quality reporting procedures by inspectors and is beneficial in correlating benzene leaks with noncompliance, thereby enhancing speed of review and allowing prompt response concerning any necessary enforcement proceedings. The recommended report elements are listed below:

- Introduction
- Compliance Status for Regulated Equipment
- Data
- Summary

In the following paragraphs, each of these topics will be covered in detail.

7.1.1 Introduction

The introduction should include general information concerning the plant name and address, the purpose of the investigation (benzene NESHAP), the time and date(s) when the investigation was conducted and the names of facility personnel who accompanied the investigator on the inspection. Also, the introduction should contain a brief process description and identify the regulated portion of the facility.

7.1.2 Compliance Status for Regulated Equipment

The compliance status of the facility should be addressed in this section. The benzene inspection checklists discussed in Section 6, may be used to complete this section of the report. The following summarizes the results of the benzene NESHAP inspection which should be included in the inspector's report.

(1) A thorough determination of the source compliance status according to each applicable rule (40 CFR 61.241 through 61.242-11).

(2) A general discussion addressing exemptions.

(3) A summary of any alternative standards pursuant to 40 CFR 61.243 and 61.244.

(4) A discussion of the leak detection procedures conducted as described in 40 CFR 61.245 and Reference Method 21.

(5) A discussion of the record review or the reports, records and logs which must be submitted or maintained by the facility according to 40 CFR 61.246 and 61.247.

The information should be arranged in a rule-by-rule format beginning with 40 CFR 61.242-1. Any regulations which are not applicable to the facility being investigated do not need to be addressed. Additionally, the report should identify the method (i.e., visual inspection, monitoring, record review, etc.) which was used to determine compliance. In the discussion sections, items 2-5, the inspector should attempt to elaborate and record all relevant observations which may otherwise not be documented, however, all of the information should be objective and factual. Any speculations or conclusions regarding the ultimate result of factual findings should be reserved for the summary portion of the report.

7.1.2.1 Individual Source Compliance Status

This section must address each of the following sources that are intended to operate in benzene service: pumps, compressors, pressure relief devices, sampling connection systems, open-ended valves or lines, valves, flanges and other connectors, product accumulator vessels and control devices or systems pursuant to 40 CFR 61.262-1, 61.242-2, 61.242-3, 61.242-4, 61.242-5, 61.242-6, 61.242-7, 61.242-8, 61.242-9, 61.242-10 and 61.242-11. The completed benzene inspection checklists, initial and semiannual reports and copies of in-plant logs may be used to determine compliance. Any violation, whether it is procedural or an excess emission, constitutes noncompliance. The following illustrates a typical report format:

(1) 40 CFR 61.242-1(d) - Each piece of equipment in benzene service is tagged with a permanent metallic tag. Compliance determined by visual observation.

(2) 40 CFR 61.242-2(a)(1) and 61.242-2(a)(2) - All pumps in benzene service are monitored on a monthly basis. Each pump is visually inspected on a weekly basis. The company appears to be in compliance with the requirements of this rule. Compliance determined by record review and discussions with facility personnel.

(3) 40 CFR 61.242-4 - This facility has a total of nineteen relief valves in benzene service. They operate with no detectable emissions (less than 500 ppm). The company is aware of the requirements of this rule. Compliance determined by record review and monitoring.

7.1.2.2 Exemptions

If the facility is claiming exemption(s) from the benzene NESHAP regulations, the compliance status with respect to each exemption must be discussed. The current facility operations and procedures should be compared to verify compliance with the exemption.

7.1.2.3 Alternative Standards

If the facility has requested and received permission to comply with one of the alternative standards for valves or and alternative method of emission limitation, the inspector should discuss facility compliance with the alternative standard. The inspector should evaluate whether the facility owner or operator understands the alternative standard and performs the necessary leak detection monitoring and recordkeeping required to comply with the standard. Deviations from any of the leak monitoring or recordkeeping requirements of 40 CFR 61.243 constitute a violation.

7.1.2.4 Leak Detection Procedures

The inspector's report should include a section that discusses the procedures employed in the facility leak monitoring program. The discussion should be brief and emphasize those parts of the inspection in which deviations from established performance criteria, calibration and leak monitoring procedures of Reference Method 21 are observed. The inspector should include comments regarding the portable VOC calibration information i.e., dates of calibrations, instrument response factors, calibration precision and instrument response time. Any quality assurance procedures observed or performed during the leak detection monitoring such as drift span checks, response check and zero gas checks should be noted. The inspector should also note whether the facility is operating under normal conditions and capacity on the day of inspection.

7.1.2.5 Reports and Recordkeeping

This section should present succinct conclusions regarding the accuracy and completeness of the facility's initial and semiannual reports, and all recordkeeping requirements of 40 CFR 61.246 and 61.247. The inspector should check for computational or statistical errors. The logs maintained by the facility should be reviewed with respect to completeness. The inspector should clearly reference or include in the attachment portion of the report, any evidence which establishes the elements of the violation, such as, photocopies of logs which show leaks were not repaired in the allotted time frame. Any violations observed during the record review portion of the inspection should already be noted in the benzene inspection checklists.

7.1.3 Data

Data to determine the performance compliance of the subject equipment including results of spot leak checks, copies of monitoring records of control devices, visible emission observations for flares and the inspector's completed benzene inspection checklists should be attached. The data should include all of the documents which support any noncompliance determination. The evidence should be adequate to establish the elements of the violation as indicated by the results of the inspection.

7.1.4 Summary

The summary should contain a brief overview of the inspection results, the overall compliance status of the facility and a description of any action taken as a result of the investigation. Although each agency may use somewhat different formats, the inspector should be cautioned against presenting any conclusions regarding violations in the body of the report. Ideally, the summary section is completely separate from the rest of the report and reserved for addressing facility violations. By placing the summary at the end of the report, it is easier to exclude it when releasing the report to other governmental agencies or if legal actions are pending. If noncompliance results are juxtaposed with the applicable performance specification, interpretation and review will be greatly facilitated. The following example may be used:

During the inspection, the compliance status with all applicable National Emission Standards for Hazardous Air Pollutants (NESHAP) regulations was investigated. Records and recordkeeping requirements as well as leak monitoring procedures were reviewed. The facility appears to be in compliance with these rules except the following:

(1) 40 CFR 61.245(b)(4)(ii) - The facility uses standard gas with 500 ppm benzene for calibration of portable VOC monitors. This constitutes a violation of NESHAP 40 CFR 61.245(b)(4)(ii) which requires that for calibration of VOC monitors, a standard gas at a concentration of approximately, but not less than 10,000 ppm of methane or n-hexane be used.

(2) 40 CFR 61.242-2(a)(1) - The facility has not conducted the monthly monitoring of pumps. This constitutes a violation of NESHAP 40 CFR 61.242 (a)(1) which requires that pumps be monitored for leaks on a monthly basis. The facility has conducted quarterly monitoring instead of monthly.

7.2 HANDLING CONFIDENTIAL BUSINESS INFORMATION

Industry today is increasingly sensitive to agency use and disclosure of confidential business information. The EPA established regulations governing confidential business information are covered under 40 CFR Part 2 Subpart B. Because the inspector can be held personally liable for disclosure, it is extremely important for all agencies performing benzene equipment leak inspections to adopt rules and guidelines for handling and releasing confidential business information. From the inspector's standpoint, confidential business information is defined as information received under a request of confidentiality which may concern or relate to trade secrets, processes, operational data, style of work, statistical data or financial data including amount of source of income, profits, losses or expenditives. This information may exist in the written form, in photographs or in the inspector's memory. Whenever possible, confidential business information should be referenced in a nonconfidential manner. For example, the inspector may simply refer to a document in the confidential files but present only a general description of the referenced document in his or her inspection report, thereby minimizing the risk of exposure. At all times, confidential business information should be kept in a secure, lockable file cabinet expressly dedicated for confidential information, and precautions should be made to

safeguard the confidential data. If confidential business information must be included in the inspector's report, the entire report must be treated as a confidential document.

REFERENCES

1. Perry, John H. Chemical Engineers' Handbook. Robert Perry, Cecil Chilton, Sidney Kirkpatrick, eds. McGraw-Hill Book Company. New York 1963.

2. U.S. Environmental Protection Agency. Benzene Fugitive Emissions - Background Information for Proposed Standards. EPA 450/3-80-032a. November 1980.

3. U.S. Environmental Protection Agency. Air Pollution Training Institute Course SI:417 Controlling VOC Emissions from Leaking Process Equipment - Student Guidebook. EPA 450/2-82-015 August 1982.