United States
Environmental Protection
Agency

Industrial Environmental Research
Laboratory
Research Triangle Park NC 27711

EPA-600/7-79-156
July 1979

EPA

Process Measurement Procedures: H_2SO_4 Emissions

Interagency Energy/Environment R&D Program Report

RESEARCH REPORTING SERIES

Research reports of the Office of Research and Development, U.S. Environmental Protection Agency, have been grouped into nine series. These nine broad categories were established to facilitate further development and application of environmental technology. Elimination of traditional grouping was consciously planned to foster technology transfer and a maximum interface in related fields. The nine series are:

1. Environmental Health Effects Research
2. Environmental Protection Technology
3. Ecological Research
4. Environmental Monitoring
5. Socioeconomic Environmental Studies
6. Scientific and Technical Assessment Reports (STAR)
7. Interagency Energy-Environment Research and Development
8. "Special" Reports
9. Miscellaneous Reports

This report has been assigned to the INTERAGENCY ENERGY-ENVIRONMENT RESEARCH AND DEVELOPMENT series. Reports in this series result from the effort funded under the 17-agency Federal Energy/Environment Research and Development Program. These studies relate to EPA's mission to protect the public health and welfare from adverse effects of pollutants associated with energy systems. The goal of the Program is to assure the rapid development of domestic energy supplies in an environmentally-compatible manner by providing the necessary environmental data and control technology. Investigations include analyses of the transport of energy-related pollutants and their health and ecological effects; assessments of, and development of, control technologies for energy systems; and integrated assessments of a wide range of energy-related environmental issues.

EPA REVIEW NOTICE

This report has been reviewed by the participating Federal Agencies, and approved for publication. Approval does not signify that the contents necessarily reflect the views and policies of the Government, nor does mention of trade names or commercial products constitute endorsement or recommendation for use.

This document is available to the public through the National Technical Information Service, Springfield, Virginia 22161.

EPA-600/7-79-156

July 1979

Process Measurement Procedures: H_2SO_4 Emissions

by

R. Maddalone and N. Garner

TRW Defense and Space Systems Group
One Space Park
Redondo Beach, California 90278

Contract No. 68-02-2165
Task No. 202
Program Element No. INE624

EPA Project Officer: Robert M. Statnick

Industrial Environmental Research Laboratory
Office of Energy, Minerals, and Industry
Research Triangle Park, NC 27711

Prepared for

U.S. ENVIRONMENTAL PROTECTION AGENCY
Office of Research and Development
Washington, DC 20460

ACKNOWLEDGMENT

The work was originally conducted under the EPA Project Officer Dr. R. M. Statnick, Environmental Research Center, Research Triangle Park, North Carolina. The current EPA project officer is Mr. Frank Briden. Dr. C. A. Flegal was the Program Manager and the Task Order Manager was Dr. R. F. Maddalone. The laboratory tests during the development of these procedures were done by Mr. Morton L. Kraft, Mr. David R. Moore and Mr. Maynard D. Cole. We wish to thank Mr. Steve Newton of the TVA and Mr. Ray Grote of the EPA for their review of the document. The overall review and support, during the field test program, from Mr. Richard G. Rhudy of EPRI, and Mr. Steven Newton and Mr. John Lawton of the TVA has been greatly appreciated.

CONTENTS

Page

ACKNOWLEDGEMENT ii

TABLES & FIGURES iv

1. INTRODUCTION 1

2. EQUIPMENT AND MATERIALS 3

2.1 Sampling Materials 3

2.2 Reagents and Apparatus for H_2SO_4 5

3. REQUIREMENTS 9

3.1 System Design 9

3.2 Sampling 9

3.3 Handling of Glassware 12

3.4 Calibration and Maintenance 12

3.5 Cleanliness 12

3.6 Safety 12

4. PROCEDURE 13

4.1 Probe Manufacture 13

4.2 Filter Holder Fabrication. 17

4.3 Site Equipment Set-Up and Operation. 19

4.4 Analysis Procedures 22

5. DATA MONITORING PROCEDURES 29

5.1 Acid Base Titration 29

5.2 Data Monitoring by Statistical Quality Control 30

6. MAINTENANCE SCHEDULES 32

7. TROUBLESHOOTING AND REPAIR PROCEDURES 35

8. REFERENCES 40

TABLES

Page

1. Critical Checkpoints for Controlled Condensation H_2SO_4 Sampling System. 14

2. General Maintenance Schedule 33

3. Troubleshooting and Repair 36

FIGURES

1. Vycor Sampling Liner 4

2. Controlled Condensation Coil (CCC) 6

3. Controlled Condensation System Set-Up. 10

4. Expected Coefficient of Variance (CV) of the H_2SO_4 Measurement Based on the Number of Samples Taken 11

5. Controlled Condensation System Probe Design. 16

6. Quartz Filter Holder 18

7. Controlled Condensation Field Data Sheet 21

8. Controlled Condensation Coil Rinsing Apparatus 23

9. Laboratory Data Sheet. 25

10. Statistical Quality Control Chart for Contamination Measurements 31

1. INTRODUCTION

This manual has been prepared for the Industrial and Environmental Research Laboratory of the Environmental Protection Agency, Research Triangle Park, North Carolina, as part of Task 13 of Contract No. 68-02-2165.

The technical objective of this task was to develop a stack sampling procedure for the measurement of the mass emission rate of sulfur trioxide (H_2SO_4 vapor) within a precision of ±10 percent, but not to exceed a precision of ±20 percent. The method chosen on the basis of previous experience (Task 02 of this program) was the Controlled Condensation System (CCS).

The Controlled Condensation System (CCS) is designed to measure the vapor phase concentration of SO_3 as H_2SO_4 in controlled or uncontrolled flue gas streams. This method is specifically designed to operate at temperatures up to 250°C (500°F) with 3000 ppm SO_2, 8-16 percent H_2O, and up to 9 g/m^3 (4 gr/cf) of particulate matter.

By using a modified Graham condenser, the gas is cooled to the acid dew point at which the SO_3 (H_2SO_4 vapor) condenses. The temperature of the gas is kept above the water dew point to prevent an interference from SO_2 while a heated quartz filter system removes particulate matter. The condensed acid is then titrated with 0.02 N NaOH using Bromophenol Blue as the indicator.

The CCS was evaluated under simulated stack conditions in the laboratory. This test program had three phases:

- Test the efficiency of the CCS under varying concentrations and mixtures of H_2SO_4, SO_2, O_2, H_2O, and CO_2 with and without fly ash present on the filter.
- Evaluate the CCS versus the EPA H_2SO_4 methods.
- Test the CCS inlet and outlet of an ESP at a coal-fired utility.

As a result of this test program these facts were learned about CCS:

- The average laboratory coefficient of variance was ±6 percent.
- Fly ash at the level of 0.3 g on the surface of the filter can reduce the amount of H_2SO_4 recovered by 12 percent when a 10 ppm gas stream of H_2SO_4 is passed through the system.
- Extensive field evaluation under high (11 g/m^3) mass loading and high SO_2 (4000 ppm) concentrations showed that as little as 0.1 ppm of H_2SO_4 can be detected.
- The coefficient of variance for the percentage removal of H_2SO_4 by wet scrubbers at a coal-fired utility was found to be ±18 percent. This value compares well with the ±11 percent for the estimated field accuracy.
- Oxidation of SO_2 at the recommended filter holder temperatures, 4000 ppm SO_2 and 8 percent O_2 did not occur. When fly ash from a coal-fired utility was placed on the filter, it did not have a catalytic effect under those conditions.

2. EQUIPMENT AND MATERIALS

The following sections list the materials required to fabricate duplicate CCS's.

2.1 SAMPLING MATERIALS

2.1.1 Probe Construction Materials. (Note: These materials are for a 91 cm (3-foot) probe. Longer probes can be made by increasing the dimensions presented).

- Three Vycor tubes 1.3 cm (0.5 in.) OD x 91 cm (36 in.) with a 18/9 female ball-and-socket joint placed on one end (special order, A. H. Thomas or Ace Glass, see Figure 1).
- Three glass insulated heating tapes - 1/2 inch x 72 inch; 288 watts (Fisher Sci. Co., No. 11-463-50C or equivalent).
- Three 33 inch x 1 inch OD x 0.065 inch wall 304 SS tubes used as probe sheaths.
- One dozen silicone rubber No. 6 stoppers (A. H. Thomas, No. 8747-E65).
- Glass tape (Scotch glass-fiber electrical tape).
- Four Omega (Stanford, Conn.) shielded thermocouples (I/C), (TJ36-ICSS-18G-12) with 8-foot lead.
- Four Omega (Stanford, Conn.) unshielded thermocouples (I/C), (IRCO-032 with 8-foot lead).
- Six Omega male connectors (ST-ICRO-M).
- Two six-foot heavy-duty (∿ 20A) electrical cords.
- Four 1-1/2 inch hose clamps.
- Two square yards of asbestos cloth (VWR, Atlanta, Georgia, No. 10930-009).
- Three adaptors for connecting hoses (Ace Glass, No. 5216-23).
- Two Teflon Swagelok Unions (T-810-6).

2.1.2 Train Components

- Two pumps capable of pulling 1 cfm of free air.
- Two bath controller-circulators (A. H. Thomas, No. 9840-B15 or equivalent).

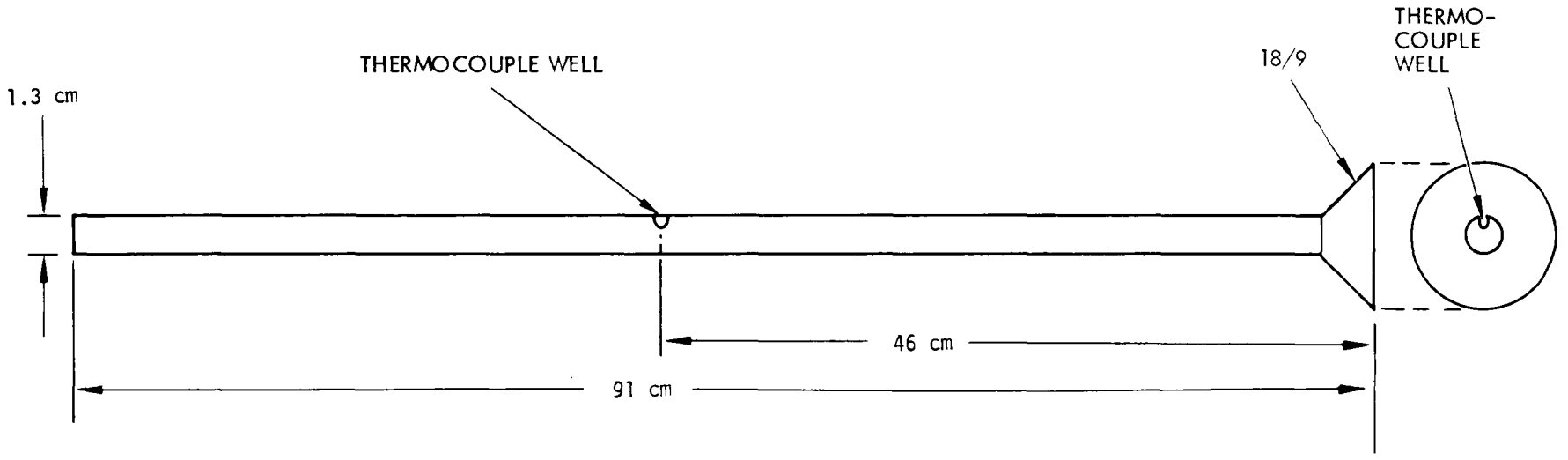

Figure 1. Vycor sampling liner.

- Fifty feet of 1/2 inch x 1/4 inch rubber tubing (A. H. Thomas, No. 9544-R57).
- Controlled Condensation Coils (CCC) — Three Graham condensors are modified to hold an enclosed 60 mm medium frit (Figure 2).
- Two insulated chests capable of holding a two-gallon bucket.
- Three glass insulated heating tapes, 3/8 inch x 24 inch, 96 watts (A. H. Thomas, No. 5954-H22 or equivalent).
- Four autotransformers, variable, 10 amp. (A. H. Thomas, No. 9461-D10 or equivalent).
- One hundred Tissuequartz filters, 37 mm diameter (Pallflex Corp., Kennedy Drive, Putnam, Conn. 06260).
- Eight pinch clamps (A. H. Thomas, No. 2841-21 or equivalent).
- Six Greenburg-Smith type impingers or equivalent.
- Sodium Carbonate, technical grade.
- Indicating silica gel (10 lbs).
- Stopcock grease (Ace Glass Co., No. 8229-10).
- Two three-inch bushings with a 1-1/8 inch hole drilled in the center.
- Two RdF digital temperature indicators-series-2000 with iron/constantan sensors.
- Two vacuum gauges (A. H. Thomas, No. 5654-B10).
- Two 0 to 100 ml/min flowmeters (Fisher Scientific Co., No. 11-164-50 or equivalent).
- Two Glass-Col heating mantles for filter system (Glass-Col, 711 Hulman St., Terre Haute, Ind., special order to fit filter holder).
- Two quartz filter holders (see Section 4.2 for design fabrication).

2.2 REAGENTS AND APPARATUS FOR H_2SO_4 TITRATION

- Carbon dioxide-free distilled water - Prepare all stock and standard solutions, and dilution water for standardization procedure, using distilled water which has a pH of not less than 6.0. If the water has a lower pH, it should be freshly boiled for 15 minutes and cooled to room temperature.

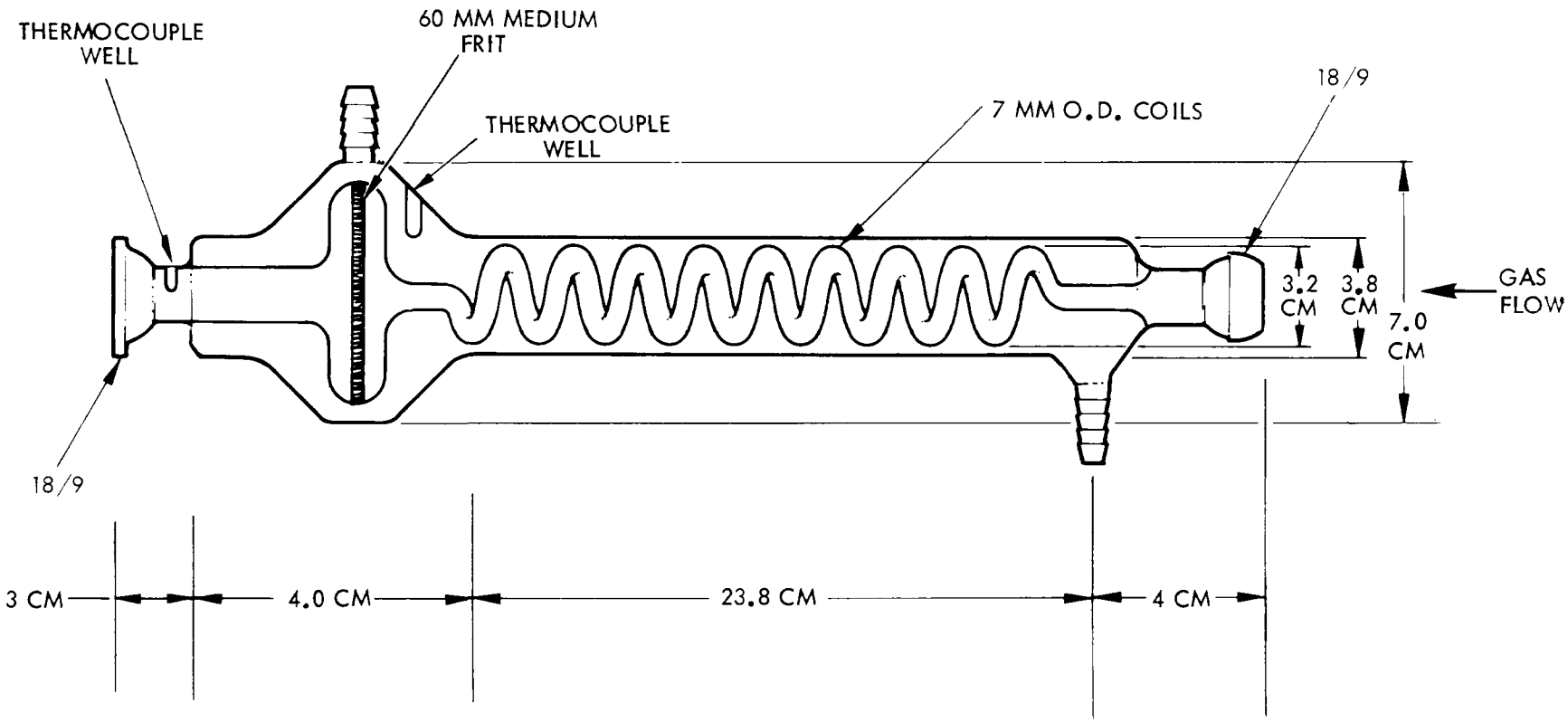

Figure 2. Controlled condensation coil (CCC).

NOTE

Deionized water may be substituted for distilled water provided that it has a conductance of less than 2 micro-ohms/cm and a pH greater than 6.0.

- NaOH pellets — Reagent grade.

- Stock 1.0 N NaOH — Dissolve 40 g of reagent grade NaOH in 1 liter of CO_2 free distilled water. Store in a Pyrex glass container with a tight-fitting rubber stopper.

- 0.0200 N NaOH — Dilute 20 ml of 1 N NaOH with CO_2 free distilled water to 1 liter. Store in a tightly rubber stoppered Pyrex glass bottle protected from atmospheric CO_2 by a soda lime tube. For best results, prepare daily. This solution will be standardized against potassium biphtalate (see Section 4.4.2).

- Potassium biphthalate ($KHC_8H_4O_4$)-Anhydrous, reagent grade.

- 0.0200 N potassium biphthalate (KHP) solution — Dissolve 4.085 g of dry (110°C for 1 hour) KHP into 1 liter of CO_2 free distilled water.

NOTE

The normality of the KHP solution equals (wt. KHP)/204.2.

- Anhydrous ethyl alcohol — U.S.P. or equivalent.

- Phenolphthalein indicator solution — Dissolve 0.05 g of reagent grade phenolphthalein in 50 ml ethyl alcohol and dilute to 100 ml with CO_2 free water.

- Bromophenol Blue indicator solution — Dissolve 0.1 g in 7.5 ml of 0.02 N NaOH. Dilute to 250 ml with CO_2-free distilled water.

- Ten milliliter micro-buret, Kimble 17132F (A. H. Thomas, No. 1993-M-30 or equivalent).

- Desiccator (A. H. Thomas, No. 3751-H10 with cover and plate to fit).

- Drierite desiccant — 5 lbs. Drierite (A. H. Thomas, No. C288-T49).

- Four Erlenmeyer flasks with 28/15 ball-and-socket joint, 125 ml (Ace Glass Co., Louisville, Ky., No. 6975 or equivalent).

- Four stoppers for 28/15 ball-and-socket joint (Ace Glass Co., No. 8263-08 or equivalent).

- Four 50 ml volumetric flasks.

- Dowex 50W-X8 cation exchange resin 20 to 50 mesh.
- Barium perchlorate trihydrate.
- 0.01 M $Ba(ClO_4)_2.3\ H_2O$ - Transfer approximately 3.9 g of reagent grade barium perchlorate trihydrate into a one-liter reagent bottle. Add enough D.I. H_2O to dissolve the salt and then dilute to the mark.
- Sulfonazo III Solution, 0.1 percent W/V — Transfer 0.025 g of Sulfonazo III into a 25-ml bottle, add water to dissolve the indicator and fill to the mark.

3. REQUIREMENTS

3.1 SYSTEM DESIGN

The SO_3 (H_2SO_4 vapor) Controlled Condensation System (CCS) consists of a heated Vycor probe, a modified Graham condenser (condensation coil), impingers, a pump and a dry test meter (see Figure 3).

3.2 SAMPLING

Since a gas or a small aerosol is being sampled, no traverse will be performed in the stack. It can be shown (Reference 7) that the average degree of stratification in the duct is ±15 percent of the mean concentration. Because of the large fluctuation in source emission rates (±65 percent), elimination of the error due to stratification will not significantly improve the sampling accuracy. For these reasons, the sample probe will be positioned at the center of the duct or stack.

It is possible to predict the expected variance in the average H_2SO_4 value. The sampling variance of an estimated average of H_2SO_4 determined from a sample of D days and H samples per day is given by:

$$\sigma_{\bar{x}}^2 = \frac{\sigma_D^2}{D} + \frac{\sigma_H^2}{H} \qquad (1)$$

where σ_D^2 is the variance between days and σ_H^2 is the variance per sample within a day. Converting this equation to terms of the coefficient of variation (CV) we have:

$$CV_{\bar{x}}^2 = \frac{CV_D^2}{D} + \frac{CV_H^2}{DH} \qquad (2)$$

From previous experience for a coal-fired utility, the CV_H was determined to be ±32.4 percent and CV_D was determined to be ±57.9 percent. Using these values, Figure 4 is generated from equation 2. Thus, if it is desired to estimate the average H_2SO_4 within 20 percent, a sampling plan of five days

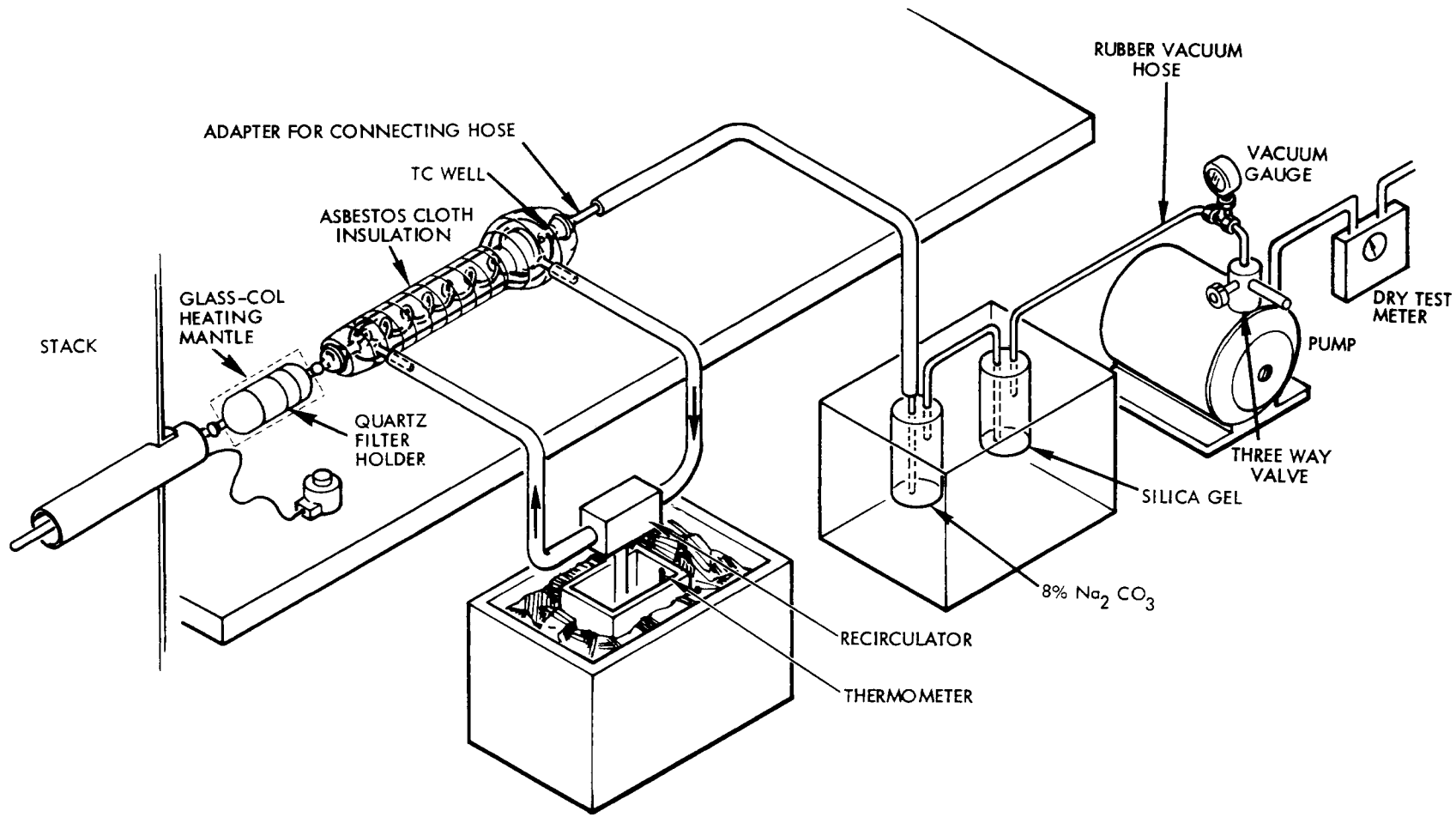

Figure 3. Controlled Condensation System Set-up.

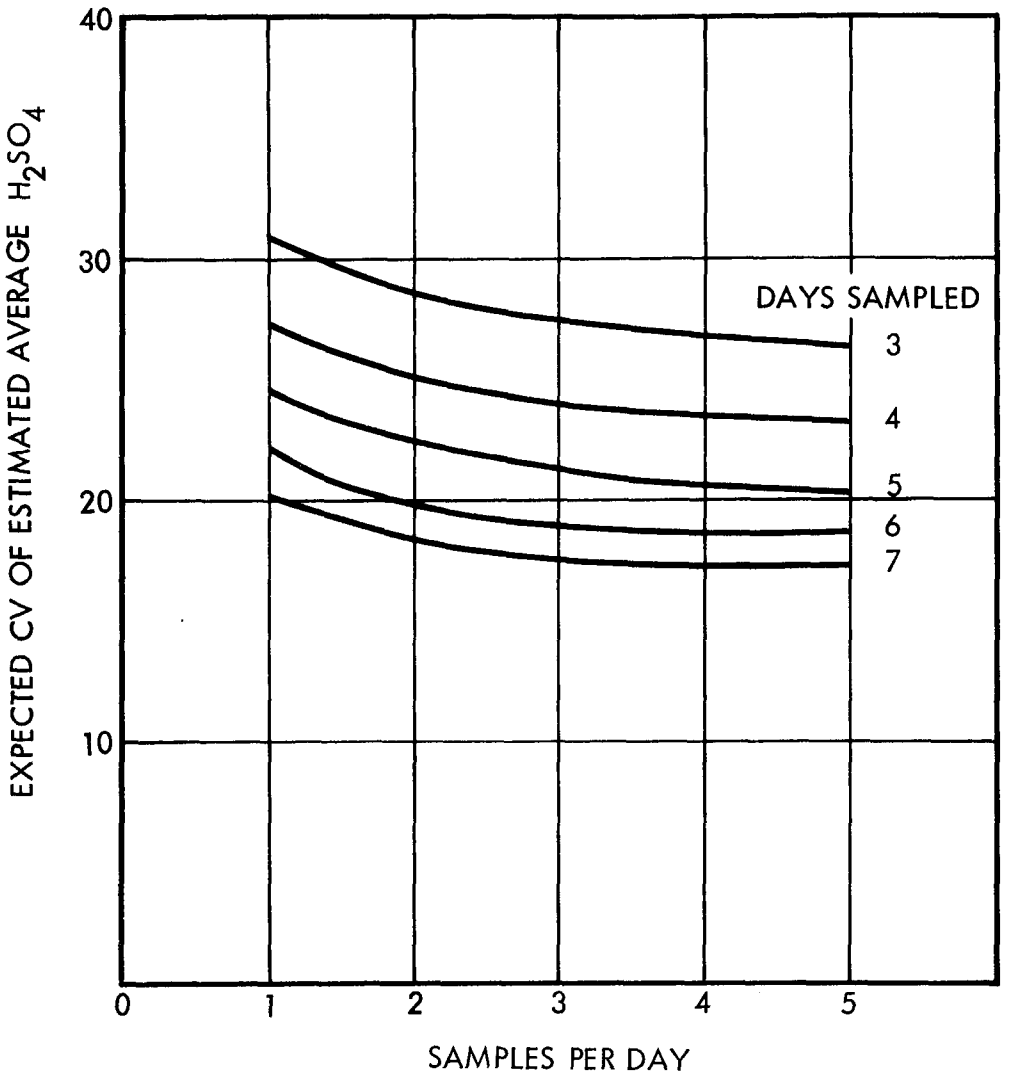

Figure 4. Expected coefficient of variance (CV) of the H_2SO_4 measurement based on the number of samples taken.

with five samples per day, or six days with two samples per day, or seven days with one sample per day is required.

3.3 HANDLING OF GLASSWARE

Because of the corrosive nature of SO_3 (H_2SO_4 vapor), only Vycor and Pyrex glassware are used. Severe mechanical shocks are to be avoided, especially when the probe is heated to 316°C (600°F). Never place any strain on glass ball joints. Clean the ball joints of grease and dirt after each run.

3.4 CALIBRATION AND MAINTENANCE

After each run the probe, connecting lines, controlled condensation coil, filter holder, and impinger system must be cleaned. The probe and connecting lines can be cleaned with a long-handle test tube brush and backflushed with high pressure air. If particulate matter adheres to the inside of the probe, rinse with D.I. water followed by acetone (or isopropyl alcohol). The impinger system is flushed out and the proper solvents are then replaced in the impinger bottles prior to the next run. The filter holder is inspected and cleaned before the next run and the filter pad is replaced. See Sections 6.0 and 7.0 for the recommended schedule of maintenance and troubleshooting activities.

3.5 CLEANLINESS

Contamination of the condensation coil rinse solutions must be avoided to prevent neutralization of the H_2SO_4. Keep the rinse solutions in a covered flask.

3.6 SAFETY

OSHA safety requirements with regard to working environment and operator safety must be met at all times. The reagents mentioned in the procedure are not extremely toxic, but misuse of any chemicals can be harmful.

4. PROCEDURE

This section contains the necessary information to build, set-up, and operate the CCS. Table 1 is a checklist of critical items giving an overview of the procedure. These critical items consist of:

- Recommended flowrates, temperatures and sampling times
- Reminders on laboratory and sampling techniques
- Specific equipment checks

While this list is provided for review prior to the sampling run, its best use is as an on-site checklist for the supervisor and quality assurance personnel during the run. During a test audit the supervisor or QA representative should initial each item successfully completed, and the entire list should be included with the documentation of that test run. The operating personnel should also have copies of the checklist for reference during the execution of the test run. Copies can be posted in the laboratory and sampling site for this purpose.

4.1 PROBE MANUFACTURE (Refer to Figure 5)

The necessary equipment is listed in Section 2.1.1. Follow correct electrical safety procedures at all times. Be sure that no sharp pieces of metal abrade any of the electrical wires.

a) Cut the 304 SS one-inch tubing into 32-inch lengths.

b) Align the shielded thermocouple (TC) as shown in Figure 5. Using the glass tape, secure the shielded thermocouple to the Vycor probe. Place the unshielded thermocouple in the thermocouple well and secure with the glass tape. Continue down the probe, securing both thermocouple leads simultaneously against the tube.

NOTE

Be careful never to kink the thermocouple or thermocouple leads.

c) Take the 72-inch glass heating tape and fold it in half.

d) Beginning 5 inches from the probe tip, wrap the probe with the glass heating tape. Make sure the heating tape is snugly up to the probe and secured every 6 inches with a wrapping of glass tape. Wrap the coils close

TABLE 1. CRITICAL CHECKPOINTS FOR CONTROLLED CONDENSATION H_2SO_4 SAMPLING SYSTEM

Checkpoint	Initials		Remarks
	Supervisor	QA Inspector	
I. Laboratory Preparation			
- Inspect and clean CCC. Both filter holder and CCC are cleaned with hot chromic acid solution and D.I. H_2O.			
- Rinse with acetone and air dry CCC.			
- Place Tissuequartz filter in filter housing.			
- Check seal between end of joint and filter.			
- Do not use grease on joints.			
- Inspect and clean all glass joints.			
II. Site Setup			
- Rinse the inside of probe prior to run.			
- Rinse probe with acetone until rinse solution is clear.			
- Perform leak test.			
- Leak rate must be less than 80 ml/min (0.003 cfm).			
- Thermocouple leads attached to probe and filter.			
- CCC water bath held at 60°C (140°F) ±1°C.			
- Leak test train.			
- Probe temperature maintained at 316°C (600°F) ±17°C.			
- Gas temperature out of filter holder held at 288°C (550°F).			
- Fresh solutions placed in impingers.			
- Fresh absorbent replaced in final impinger.			
- Adjust flowrate in system to 8 lpm.			
III. Sampling Run			
- Turn vacuum pump on just before inserting probe in the stack.			
- Check seal between probe and port to prevent any outside air from entering the stack.			
- Run test for 1 hour or until coils are frosted to 1/2 or 2/3 of their length.			
- After run cap both ends of the probe and lay in horizontal position.			
- Rinse the CCC coils into the modified Erlenmeyer flask with a maximum of 40 ml of D.I. H_2O.			
- Was any of the solution lost (ml estimated)?			
- Handle hot glassware carefully to prevent personnel injury and damage to equipment.			
- After probe has cooled, the probe is rinsed with a maximum of 40 ml. D.I. H_2O into a 125 ml Erlenmeyer.			

(continued)

TABLE 1. (continued)

Checkpoint	Initials		Remarks
	Supervisor	QA Inspector	
- Was any solution lost (ml estimated)?			
- Clean support equipment prior to next run.			
- Save filter for titration.			
IV. Laboratory Analysis			
- Clean glassware prior to titration.			
- Use Bromphenol Blue indicator.			
- Is the NaOH buret protected with a CO_2 absorbent tube?			
- When was NaOH standardized last (Date)?			
- Filter any solution that has suspended particulate.			
- Use same number of indicator drops for each titration.			
- Perform indicator blank on a volume of D.I. H_2O equal to sample aliquot used.			
- Indicator blank added to H_2SO_4 milli-equivalents found.			
- Perform all analyses in triplicate.			
V. Data Analysis Verification			
- Obtain and titrate test samples from main laboratory.			

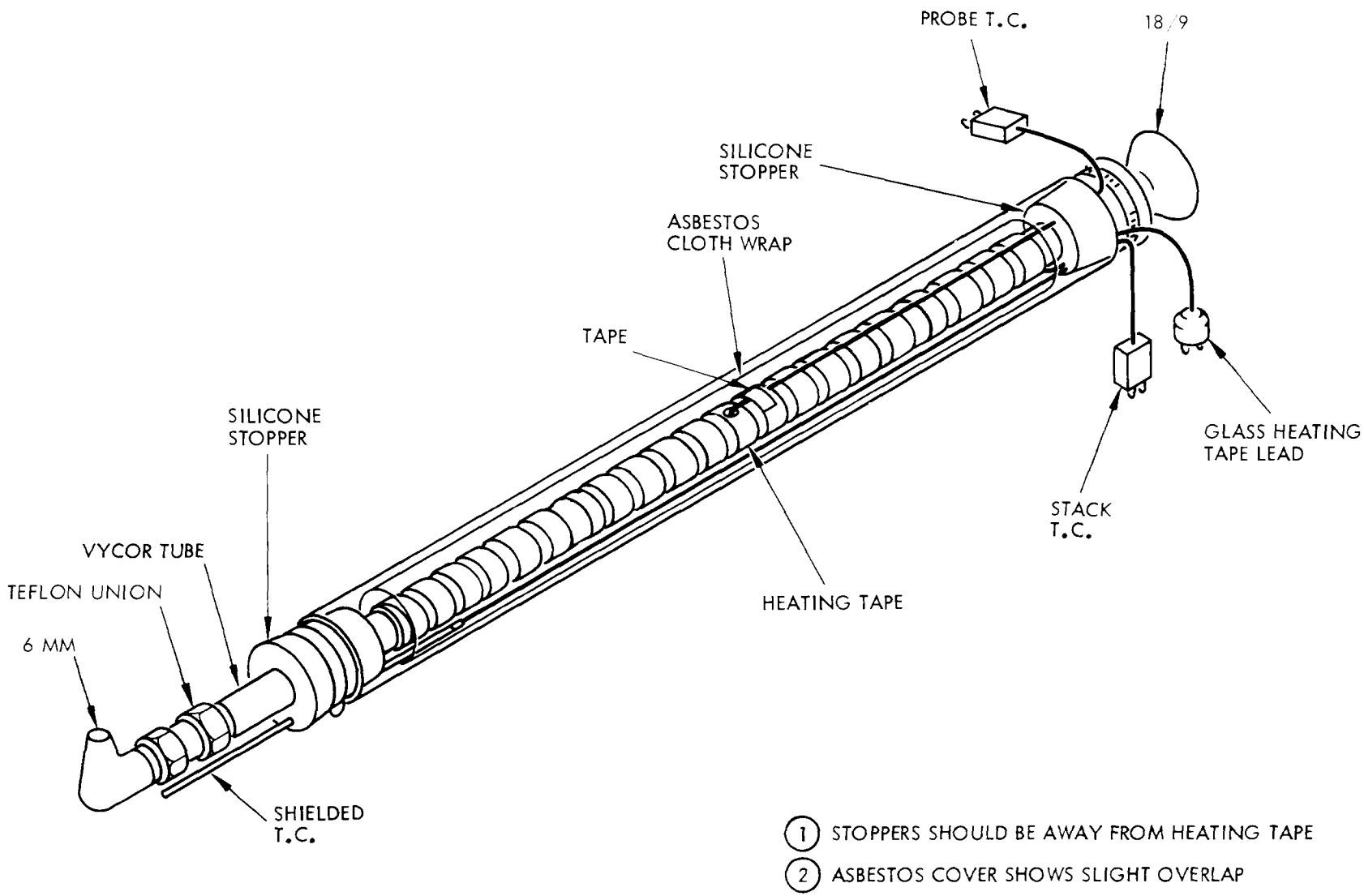

Figure 5. Controlled condensation system probe design.

enough so that the heating wire is completely used up 2 inches from the ball joint. Secure the end of the heating tape with a final wrap.

e) Bore a 9/16-inch hole into two No. 6 silicone rubber stoppers, then cut a slit vertically down one side of the stopper into the 9/16-inch hole. The slit will allow easy assembly.

f) Cut a piece of asbestos cloth approximately 30 inches long and wide enough to wrap the probe and heating tape with a 1/2 turn overlap. Tightly wrap the probe and secure the asbestos cloth with glass tape.

g) Slide the 304 SS sheath over the Vycor probe. Avoid scratching the insulation on the electrical leads. Position the sheath so that the end near the tip extends one inch past the start of the heating tape.

h) Spread the stopper open, slip it over the tip of the probe, and slide it into the 304 SS sheath. The stopper is then wired to help hold it in place. Repeat this procedure for the other end, only use a hose clamp to hold the back stopper in place.

i) Place the male quick connects on the end of the TC leads. The red TC lead goes to the negative terminal.

j) The probe should be tested in the laboratory to ensure that all parts are in order. Simply connect the heating wire to the Variac and allow the probe to heat up. Monitor the temperature to verify the TCs are functioning.

NOTE

Whenever heating up the probe, start off with very low power inputs ($\sim$5 percent) until heating starts.

k) The 0.25-inch nozzle and Teflon union (Figure 5) are attached prior to the test run. The nozzle consists of a 0.5-inch diameter quartz tube tapered to 0.25-inch at one end and a 90^{0} bend placed in the center of its 2.5-inch length.

4.2 FILTER HOLDER FABRICATION

Figure 6 details the recommended design for the quartz filter holder. This filter holder consists of a modified 40/50 standard taper quartz joint. The modifications included adding a coarse quartz frit and an extension tube

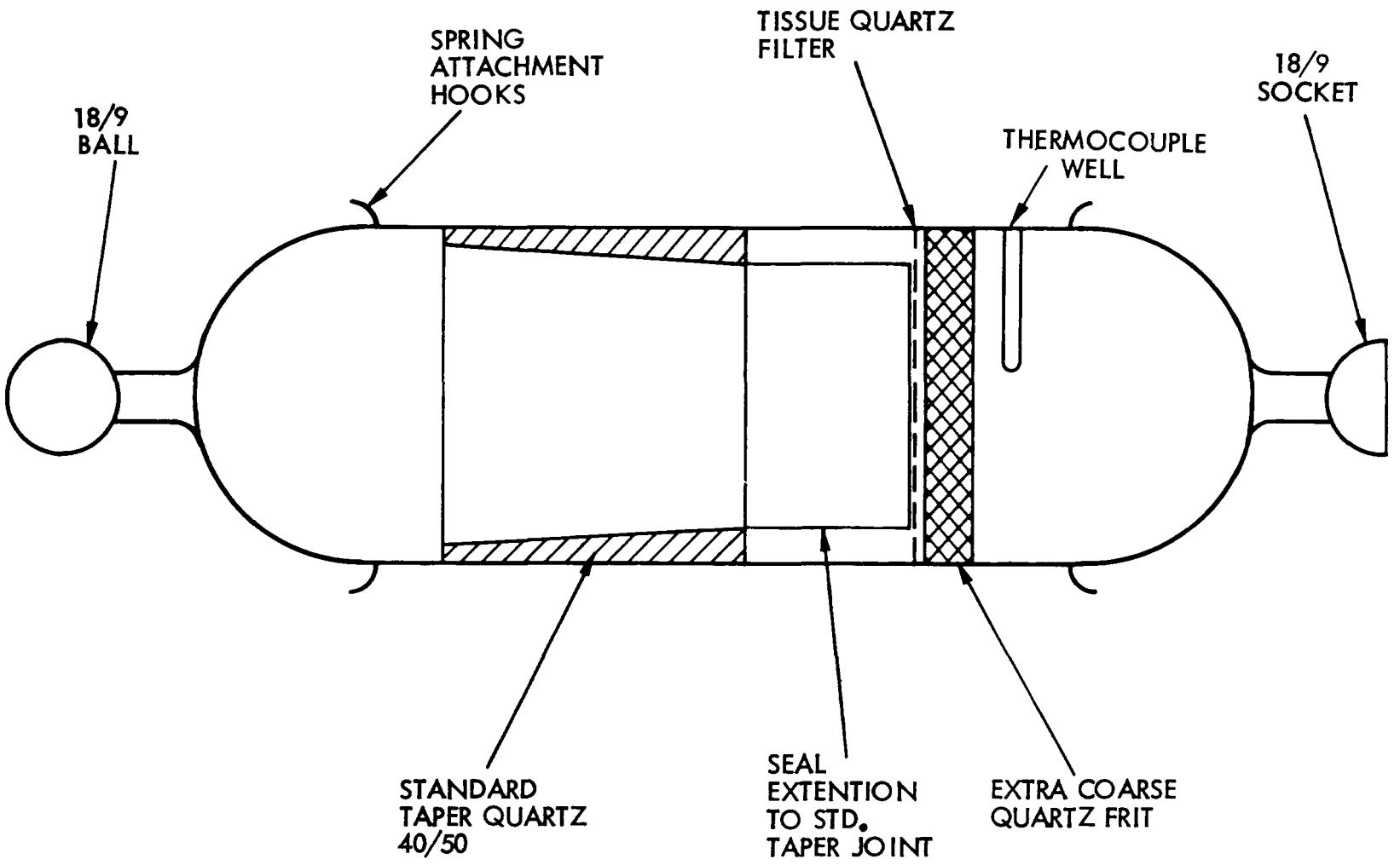

Figure 6. Quartz filter holder.

to the male joint to act as a pressure seal when the Tissuequartz filter pad is in place. Ball-and-socket (18/9) joints are used to connect the filter holder to the probe and controlled condensation coil.

NOTE

> Be sure the extension tube seals on the Tissuequartz filter. If there is not a tight seal, carefully cut a washer out of a spare Tissuequartz filter to make a seal. Do not use two filters.

4.3 SITE EQUIPMENT SETUP AND OPERATION

a) In the 3-inch port, insert a 3-inch plug with 1-inch hole.

b) Use a table or another suitable device to support the CCS (see Figure 3).

c) Prior to use, be sure the controlled condensation coil (CCC) is clean and dry. Carry the CCC to the site with each end stoppered. If any condensation appears because of temperature changes, connect the CCC to the water bath and start the circulation of the 60°C (140°F) water. This should evaporate any premature condensate.

d) With the probe still out of the stack, assemble the train as shown in Figure 3. Be sure that each ball joint is completely clean and free of dust. Because of the possibility that the greases will freeze at the temperatures employed, it is not recommended that any grease be used. Proper care of the ground glass fittings will ensure that vacuum seals are maintained. Should any ground glass fitting not seal vacuum-tight, a small amount of Apiezon H grease may be used for emergency repair. As soon as it is possible, the joint in question should be returned to the glass shop for regrinding (see Tables 2 and 3 for further suggestions).

e) Connect the flowmeter to the vacuum pump exit. Be sure that the flowmeter is vertical. Close off the end of the probe with a stopper, turn on the vacuum pump and adjust the vacuum to read 380 torr (15 in. Hg).

f) Begin measuring the flowrate with the flowmeter. If the leak rate is less than 80 ml/min (0.003 cfm), then the system is ready for use. If a leak rate greater than 80 ml/min is found, the system should be checked for loose joints and connections. The pump should also be checked and any worn parts replaced. See Tables 2 and 3 for corrective action.

g) Once the vacuum test is completed, slowly turn the three-way valve to the vent position and allow the air to bleed into the system. This must be done carefully to prevent a pressure surge from backing up the impingers. Remove the flowmeter from the system and unstopper the probe.

h) Begin heating the probe and the filter holder to 316°C (600°F) and 288°C (550°F), respectively. The heating bath should already be at 60°C (140°F). Once the skin temperatures reach these values, the run can commence.

NOTE

> During the course of the run, the filter temperature will be controlled by the gas out temperature which should be 288°C (550°F).

i) After leak testing, the pump is again turned on and the flowrate adjusted to 10 lpm (0.33 cfm) using the dry test meter and a stopwatch. The pump is turned off without readjusting the valve settings.

j) Pinch the hose at the end of the controlled condensation coil and insert the heated probe into the duct with the nozzle pointed downstream.

NOTE

> The downstream orientation of the probe nozzle will reduce the gross amount of particulate collected in the probe and filter section. Sulfuric acid aerosols should not be discriminated against because of their extremely small size, which allows them to follow the flow lines into the nozzle.

k) Turn on the pump, release the pinched hose, and obtain an initial dry gas meter reading. Throughout the run, collect the data required (see Figure 7).

l) Sample for one hour or until 1/2 to 2/3 of the length of the coils are frosted with H_2SO_4.

NOTE

> If the coil is operating properly, the H_2SO_4 will cover the inside of the coils as a thin gray-white film. If large drops of a clear liquid form and begin to block the coil, then moisture is being condensed. Either the percentage moisture has exceeded 16 percent or the temperature of the water bath has dropped below 60°C. Abort the run and check the water bath temperature with an Hg

AEROSOL SO_3
(CONTROLLED CONDENSATION)
FIELD DATA SHEET

Sample Location_____

Run #_____

Run Date/Time_____

Operator_____

Flowrate (cfm)_____

Ambient Pressure (P)_____

Reheater Air Flow Rate, acfm_____

Inlet Gas Rate, acfm_____

Sample Location SO_2 (ppm)_____

Boiler Load (mw)_____

Leak Rate_____

Time (Min)	Temperature (°F)								Gas Meter Reading, cu. ft.
	Stack	Probe	Filter		Recirc. Water	Exit Coil	Dry Gas Meter		
			Skin	Out			In	Out	
AVG.									

Figure 7. Controlled condensation field data sheet.

thermometer and confirm the percentage moisture in the gas stream. If the water bath is below 60°C, recalibrate the temperature bath control. For every percent above 16 percent H_2O, adjust the CCC temperature 2°C upward. Clean and dry the CCC, and replace the reagents in the impingers prior to restarting the run.

m) At the end of the sampling period, remove the probe from the duct and slowly shut off the pump. After the pressure drops, remove the CCC from the system without removing the water bath hoses. Carefully connect the G/R coil (Figure 8) to the Erlenmeyer flask without spilling any condensate in the tube. In 10 ml increments (up to 30 ml), use D.I. water to rinse out the CCC. Be careful to avoid introducing any dust or grease into the rinse solution. Take the rinse solution in the stoppered Erlenmeyer to the laboratory, dilute to 50 ml with CO_2-free water prior to analysis.

NOTE

Multiple rinses are recommended to ensure a quantitative wash of the coil.

n) Rinse the probe with 30 to 40 ml of D.I. H_2O after it has cooled. Take this solution back to the laboratory, and filter it through a Whatman number 1 filter into a 50 ml volumetric. Dilute this solution to 50 ml with CO_2-free water.

CAUTION

Wait until the filter has cooled before proceeding.

o) Remove the filter and any debris from the filter holder and place it into a beaker. Add 30 ml of D.I. H_2O and swirl the beaker. Filter the solution through a Whatman number 1 filter into a 50 ml volumetric. Repeat with 10 ml portions of D.I. H_2O until the volumetric is filled to the mark.

4.4 ANALYSIS PROCEDURES

Two procedures can be used to determine the amount of H_2SO_4 collected:

1) An acid/base titration using Bromophenol Blue indicator or

2) A sulfate titration using Sulfonazo III as the indicator.

Since the end points for titrations are very color dependent, the end point will probably vary slightly for each operator's sense of color. To

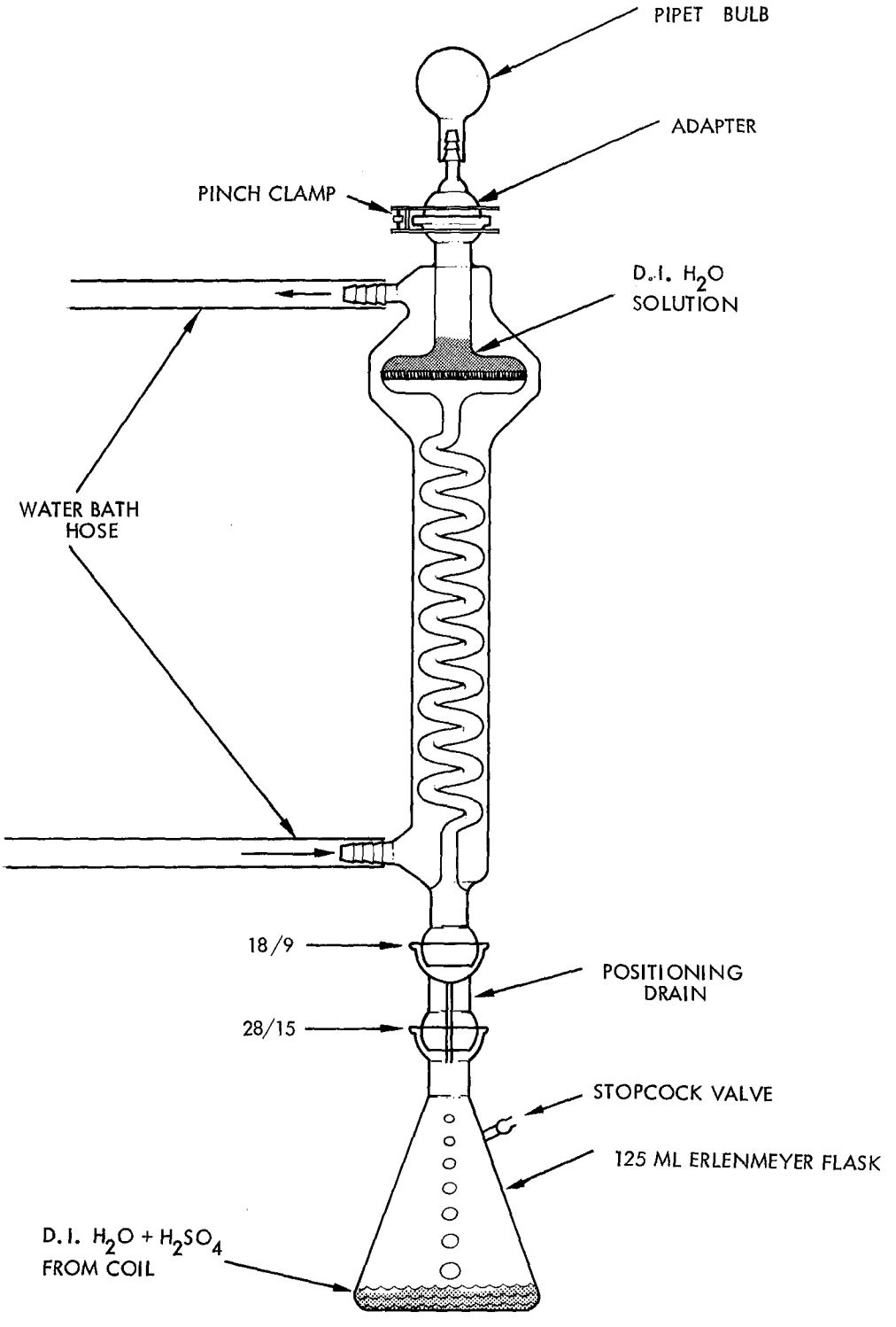

Figure 8. Controlled condensation coil rinsing apparatus.

obtain the most accurate data, the following techniques should be employed in all titrations:

- Always add the same number of drops of indicator.
- Have the same operator do the blank and sample.
- Always titrate to the same color intensity.
- Avoid parallax errors — keep eyes at the same level as the liquid meniscus and hold a white piece of paper behind it with a dark line horizontal to the table top.
- Remove air bubbles from buret tip prior to use.
- Never store reagent in buret. Always rinse out buret with a slight amount of titrant.
- Always record titrant type and volume used.

Because of the simplicity and sensitivity of the acid/base titration, it is the recommended procedure. The sulfate procedure is included in this section to act as a backup or total sulfate method if the need arises. In either case all the titrations should be done in triplicate and the results recorded on the laboratory data sheet (Figure 9).

4.4.1 Sulfate Titration Using Sulfonazo III. (Reference 6)

1) Wash the Dowex 50 W-X8 cation exchange resin with 10 percent V/V HCl. Fill a 1/2-inch I.D. ion exchange column to a 3-inch bed depth and place glass wool pads at the bottom and top of the bed. Rinse the column with deionized water until the elutant tests neutral with pH paper.

2) Transfer 0.025g of chemically pure Sulfonazo III indicator $[(NaSO_2)_2\ C_{10}\ H_2\ (OH)_2]\ (N{:}NC_6\ H_4SO_3H)_2$ to a 25 ml-bottle, add water to dissolve the indicator, and fill to the mark.

3) Transfer approximately 3.90 g of reagent grade barium perchlorate trihydrate $[Ba(ClO_4)_2.3H_2O]$ into a one-liter reagent bottle, add a small amount of distilled water to dissolve the salts, and then fill to the mark. Mix the contents of the bottle.

4) Standardize the $Ba(ClO_4)_2$ by titrating sodium sulfate. Dry the Na_2SO_4 in an oven for two hours at 125°C and allow to cool to room temperature in a desiccator. Weight out accurately in triplicate 12 to 16 mg of the Na_2SO_4 from a weighing bottle into 125 ml Erlenmeyer flasks, dissolve with 10 ml deionized water, add 10 ml acetone and three drops Sulfonazo III indicator solution, and titrate with the barium perchlorate.

AEROSOL SO_3
(CONTROLLED CONDENSATION)
LABORATORY DATA SHEET

Run #_____ Sample Location_____

Run Date/Time_____ Date Lab Analysis Completed_____

Analyst_____

Variable	Value
Aliquot Size (A)	_____(ml)
Normality of titrant (N)	_____(eq./ℓ)
ml of titrant used to titrate G/R coil rinses (v)	_____(ml)
	_____(ml)
	_____(ml)
	Avg. _____(ml)
Blank (equivalent NaOH)	_____(ml)
Net titration volume (V)	_____(ml)
Absolute dry gas meter temperature (T_m)	_____(°R)
Volume of gas sampled (V_m)	_____(ft^3)
Meter Pressure (P_m)	_____(in. Hg)
ppm H_2SO_4 (vol/vol)	_____

Normality of acid used to titrate blank (if used) _____

Figure 9. Laboratory data sheet.

5) Repeat this procedure in triplicate for the sample and blank (D.I. H_2O):

$$M = \frac{W}{(142)\ (V - v_a)}$$

Where: M = Molarity of the barium perchlorate solution, moles/liter

W = Weight of sodium sulfate titrated, mg

V = Average volume of barium perchlorate solution required for titration of sodium sulfate, ml

v_a = Average volume of D.I. water blank titration.

6) Take a 10 ml aliquot of the rinse solution and pass it through the ion exchange column at 3 ml/min. Rinse the column with 30 ml deionized water and collect the elutant and rinsings in a 50-ml volumetric flask and dilute to the mark with deionized water.

7) After every tenth use of the column, regenerate it with 100 ml of 10 percent W/V HCl at 3 ml/min flowrate and rinse until the elutant tests neutral to pH paper. Rinse the column with 50 ml of D.I. water.

8) Add 10 ml acetone and three drops of the Sulfonazo III indicator to a 10 ml aliquot of the ion exchange elutant.

9) Titrate with 0.01 M $Ba(ClO_4)_2$ using a magnetic stirrer and back lighting. The color will change from purple to blue. The end point is the point at which an additional drop of titrant does not change the color of the solution. The end point should not fade unless left standing for more than 5 to 10 minutes. Record the volume of 0.01 M $Ba(ClO_4)_2$ used to reach the end point and calculate the average titration volume. Titrate a 10 ml aliqout of D.I. water in the same fashion to obtain the titration blank.

4.4.2 Acid/Base Titration

The preferred method of analysis is the acid/base titration using Bromophenol Blue indicator. Carefully handle and store the samples in clean glassware and analyze them as soon as possible. Record all results on the laboratory data sheet.

Each acid/base indicator in this procedure will change color over a different pH range. For example:

Indicator	pH Range	Color Change
Bromphenol Blue	3.0 to 4.6	yellow to blue
Phenolphthalein	8.2 to 10.0	colorless to pink

The point measured by the indicator is simply the point at which the color change occurs. The actual end point where exactly the right amount of acid and base have reacted (equivalence point) can be close to or far away from the indicator end point. Thus Bromophenol Blue is chosen for the $NaOH/H_2SO_4$ titration, since the equivalence point occurs at about pH 3. Phenolphthalein is used for the KHP/NaOH standardization titration because the equivalence point is near pH 7.

Even though the indicators have been selected to be as close as possible to the actual end point, a small difference still exists and is called the indicator blank. The indicator blank for phenolphthalein is the amount of NaOH required to change a specific amount of water containing a known number of drops of phenolphthalein pink. This value is <u>subtracted</u> from the milliliters used to titrate the sample.

The indicator blank from Bromophenol Blue is determined in the same way (known volume and number of drops) except that a standard acid (H_2SO_4) is used to backtitrate the indicator in distilled water to a yellow color. The number of <u>milliequivalents</u> used is <u>added</u> to the amount found titrating the sample.

NOTE

> Blanks can vary with sample size and number of drops of indicator; therefore determine the indicator blank under the same conditions in which the sample is titrated.

The procedures for standardization and sample analysis follow:

1) Pipet 10 ml of the 0.0200 N KHP solution into a 125 ml wide-mouth Erlenmeyer flask.

2) Add 3 drops of the Phenolphthalein indicator. With a swirling action of the flask, titrate with 0.02 N NaOH solution until the first pink color stays. Record the volume and repeat from (1) in triplicate. Repeat this procedure using D.I. H_2O (blank).

3) Average the volume used to titrate the KPH solution. The true normality of the standard NaOH solution equals:

$$N = \frac{(0.0200)\ (10\ \text{ml})}{(\text{ml titrant} - \text{ml blank})}$$

4) To titrate the H_2SO_4 in the condensation coil, probe, and filter rinses, pipet 10 ml of one of these solutions into a 125-ml Erlenmeyer flask.

5) Add 3 drops of the Bromophenol Blue indicator to the solution and titrate to the blue end point with standard NaOH. Triplicate analyses should be performed as well as an indicator blank during the blank test titration. (See Paragraph 4.4.2). Remember this Bromophenol Blue sample blank is added to the sample value.

4.4.3 Calculation of the H_2SO_4 ppm (v/v) Concentration

Using either the sulfate or acid base titration, the concentration of SO_3 as H_2SO_4 in the flue gas stream can be calculated.

Note: The formula is based on a 50 ml original sample volume.

1) From the Field Data Sheet (Figure 7) obtain the average dry test meter temperature, volume of gas sampled and the pressure at the meter box. Record these values on the Laboratory Data Sheet. (Figure 9).

2) Using the Laboratory Data Sheet, insert the correct numbers into the following formula

for acid/base titration: $\text{ppm } H_2SO_4 = 1{,}201.9 \left(\frac{NVT_m}{AV_m P_m}\right)$

for sulfate titration: $\text{ppm } H_2SO_4 = 12{,}019 \left(\frac{MVT_m}{AV_m\ P_m}\right)$

The result is ppm (v/v) H_2SO_4 at 70°F and 29·92 in Hg.

Note: This value can be 12 percent low due to fly ash present on the filter (See Introduction).

5. DATA MONITORING PROCEDURES

The data monitoring procedures for the CCS are devoted mainly to the acid-base titration performed in the laboratory and to the monitoring of the H_2SO_4 ppm values calculated.

5.1 ACID BASE TITRATION

In order to check the accuracy of the titrations performed on the CCS samples, an independent check of the NaOH solution and titration method is required. An unknown standard sample of H_2SO_4 approximately 0.01 N should be analyzed by the lab personnel every couple of weeks. Analysis of the sample should be in triplicate and reported to 3 places (0.X Y Z). Analysis of this sample will provide information on the precision of the CCS titrations and accuracy of the results.

The procedure follows:

1) Take a 10 ml aliquot of the unknown standard.

2) Titrate in triplicate with Bromophenol Blue to the blue end point and record the number of milliliters used.

3) Determine the normality of the solution from:

$$N_A = \frac{N_B V_B}{V_A}$$

where: N_A = Normality of the acid

V_A = Volume acid aliquot taken (ml)

N_B = Normality of the base

V_B = Volume of the base used to titrate the sample (ml)

The results of the determination should not differ by more than ±10 percent within the triplicate numbers nor should the determined normality be off by more than ±10 percent.

If the values differ by more than 10 percent:

- Check the calculations and be sure the correct values have been used.
- Repeat the analysis.
- If the value is still off, restandardize the NaOH with KHP.
- Repeat the test.

5.2 DATA MONITORING BY STATISTICAL QUALITY CONTROL

In many cases where inlet and outlet information in H_2SO_4 values are measured, it was possible to monitor the SO_3 results by plotting the inlet and outlet SO_3 values. Since there is a direct correlation between outlet and inlet concentrations, a simple control chart using regression analysis can be used (Figure 10) to evaluate the data. The area between the 2 and 3σ limits is the warning zone. A point falling in this area indicates that the measurement system may be out of control. The region between the -2σ and $+2\sigma$ limits should contain, in the long run, 95 percent of all future paired measurements. The region between the -3σ and the $+3\sigma$ limits should, essentially, contain all future paired measurements of inlet and outlet contamination. A point falling outside of the 3σ limits indicates that the measurement system is out of control.

The σ limits should be based on a "large sample", say ≥ 30, of paired measurements. If, for a particular environmental situation, the sample size is less than 30, interim charts will be established using tolerance limits. Thus, the warning limits will be the (90,90) limits. That is, it is expected that 90 percent of the future observations will lie within such limits, 90 percent of the time. The rejection limits, or the limits that indicate that the system is out of control will be the (90,95) limits. That is, it is expected that 95 percent of the future observations will be within these limits 95 percent of the time. At all times:

- Check with the power plant of the scrubber control room to find out if any mechanical problems occurred during the run.
- Verify that all the laboratory numbers are correct and repeat the analysis if solution is left over.

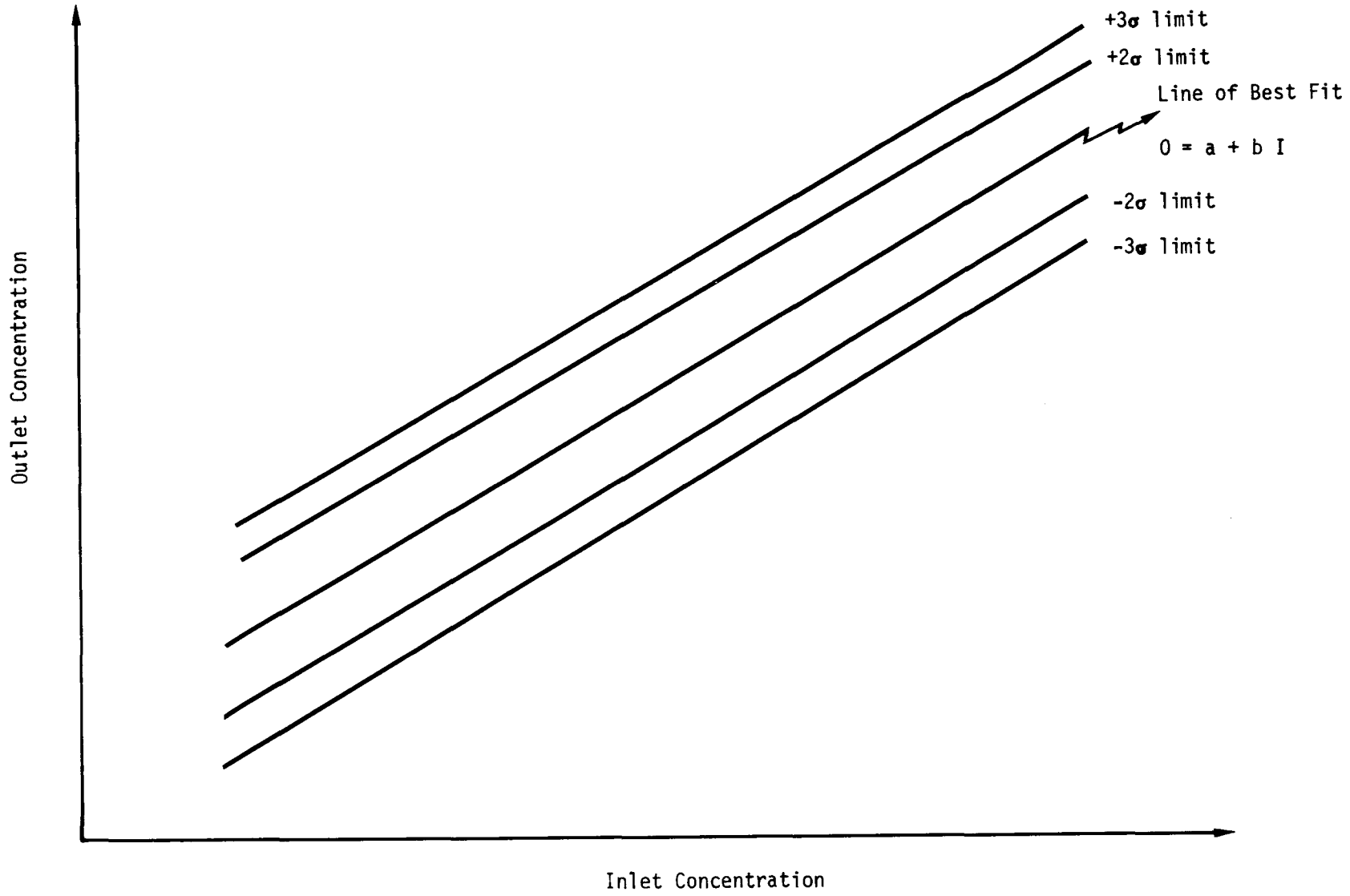

Figure 10. Statistical quality control chart for contamination measurements.

6. MAINTENANCE SCHEDULES

Table 2 details the recommended maintenance schedule. Following this schedule is imperative to prevent breakdown and to maintain the high accuracy required in the program.

TABLE 2. GENERAL MAINTENANCE SCHEDULE

Component	Maintenance Schedule By:			Calibration Procedure
	Run	Week	Month	
Probe nozzles	Inspect nozzle for damage. Brush nozzle before and after run to remove inside particulate.			Measure nozzle ID with micrometer.
Quartz probe	Before and after each run brush and rinse with reagent grade acetone or Freon then D.I. H_2O until the rinse is clean.			N/A
Impingers	Rinse out after each run with D.I. water. Inspect and clean seal area and O-rings. Leak test before each run.			N/A Leak test at 380 torr (15" Hg) and verify that a leak rate of <80 ml (0.003 cfm) is maintained.
Pump	Before each run check leak rate in pumping system.		Inspect vanes on diaphragm. Inspect and clean motor brushes.	Total leak rate in system at 380 torr (15" Hg) must be less than 80 ml/min (0.003 cfm).
Swagelok fittings	Inspect fitting, especially ferrule and seat for wear and dirt. Clean or replace fitting as required.			N/A
CCS filter holder	Inspect and clean after each run. Replace filter after each run.	Clean frit each week in hot chromic acid for 12 hours. Rinse to neutral pH with D.I. H_2O.		N/A
CCC	Inspect and clean after each run	Clean coils and frit each week in hot chromic acid for 12 hours. Rinse to neutral pH with D.I. H_2O.		N/A
NaOH solution		Standardize the stock NaOH with KHP weekly.		

(Continued)

TABLE 2. (continued)

Component	Maintenance Schedule By:			Calibration Procedure
	Run	Week	Month	
Thermocouples	Inspect lines for wear and kinks.	Clean tips of shielded TCs. Clean connector prongs with steel wool.	Calibrate thermocouples.	Calibrate TC at two points (ice-water and near boiling). Compare TC readings to mercury thermometer. Replace TC if agreement is not within 3°C (6°F).
Temperature Indicator	Clean readout of all dust.		Have electronics shop remove the back and clean the inside of the unit. Check indicated temperature with calibrated thermocouple.	Perform thermocouple calibration with readout unit using independently calibrated thermocouple. Check indicated temperature readings with calibrated thermocouple.
Connecting lines	Blow out connecting lines with air. Visually inspect exterior for wear. Especially inspect hose to fitting connections.	Flush with water and dry with clean plant air.		N/A
Dry test meter	Clean exterior.		Calibrate versus wet test meter every 3 months.	Run wet and dry test meters in series; note temperature and pressure. If dry test meter is >3% off, send to factory for recalibration.

7. TROUBLESHOOTING AND REPAIR PROCEDURES

Table 3 lists possible problems that can be encountered with the equipment used in the test program. This list should be updated by the field personnel as new problems are encountered and solved.

TABLE 3. TROUBLESHOOTING AND REPAIR

Component	General Remarks	Problem	Repair Sequence
S-Pitot Nozzles	Alignment of pitot tubes is critical. The tubes must be facing 180° with respect to each other and parallel to gas flow in the duct.	Misaligned nozzle	Return S-Pitot tubes to original 180° alignment. Align nozzles to be parallel to gas flow. Position face of nozzle to be perpendicular to gas flow.
		Damaged edge	File and buff edge to smooth oval — repeat alignment checks.
Probe Nozzles	A smooth circular edge is required for accurate sampling. Alignment of nozzle face must be perpendicular to gas flow.	Nozzle wear or damage	Loosen Swagelok fitting and realign (x-axis) nozzle face to perpendicular to gas flow.
		Misalignment	Bend nozzle neck (y-axis) so that nozzle face is perpendicular to gas flow.
Quartz Probes	Avoid mechanical shocks especially when probe is hot. Before cleaning probe with liquids, allow the probe to cool to air temperature.	Normal wear and cleanliness	Brush and rinse with acetone after each run (Note: Test brush to ensure it is not dissolved by the acetone).
Impingers	Impingers, should be cleaned with soap and water. Deposits should not be allowed to build up inside impinger. All nozzles should reach to within ±1.3 cm (0.5") of the bottom of the impinger. To ensure good seals, keep the impinger seals clean.	Normal wear and cleanliness	Rinse out with D.I. water after each use. Dry impinger to be used for moisture trap. Clean sealing edges.
		Leakage in impinger system	Check all Swagelok fittings. Inspect impinger seal area for dirt or damage. Clean area if dirt found. Use larger O-ring. If all other measures fail to locate leak, pressurize and immerse in water to find leak.

(continued)

TABLE 3. (continued)

Component	General Remarks	Problem	Repair Sequence
Thermocouples	Thermocouple (TC) leads and wire are fragile and require care in arranging the equipment set-up to prevent kinking and stripping of leads. Never pull a TC apart by pulling on the lead. Verify that the polarity is not reversed anywhere in the system. Be sure that the same type of TC wire and connectors are used in the system (Iron-constantan or chromel-alumel). Do not bend casing of shielded thermocuople.	Temperature indicator fluctuating over wide range	Locate possible short in TC wire or connectors. Once portion of wire with short is located, mark and have the wire replaced. Have readout checked by electrical shop if no external short can be found.
Temperature Indicator	Store in dust-free area.	Temperature readings fluctuating on one channel No temperature readout or fluctuating temperatures on all the channels with thermocouples attached	Check thermocouple for short in lead or connectors. Return to electronic shop for repair. Return to manufacturer if problem cannot be found.
Mantle or probe	Never exceed maximum temperature as stated in the manufacturer's manual.	No temperature rise with current on	Check electrical connections. Check main power. Check fuses and circuit breakers. Verify thermocouple connected.
Connecting lines	While these lines are either heavy vacuum hose or steel-braided Teflon lines, care should be taken to minimize weight supported by the lines and excessive mechanical abuse.	General maintenance	Replace any worn or corroded parts.
Pump	Care must be taken in shutting the pump off after a run. Rapid shutdown without bleeding air into the pumping system will cause the impingers to back up toward the filter.	Leakage (oil-free)	Check all valve and hosing connections leading to pump. If the leakage has been isolated in the pump, disassemble pump and inspect vanes for wear and replace if necessary.

(continued)

TABLE 3. (continued)

Component	General Remarks	Problem	Repair Sequence
Pump (Continued)		Leakage (diaphragm)	For leakage or low flow in diaphragm pumps check the diaphragm cover to ensure it has not vibrated loose. Remove face plate and inspect diaphragm for signs of wear or pinholes. Check the diaphragm gasket for wear; replace if necessary.
Swagelok fittings	Swagelok fittings are designed to seal with a minimum of tightening. Excessive torque applied to the fitting will eventually cause leakage.	Installation	Insert the tubing in the service. Insert the tubing into the Swagelok tube fitting. Make sure that the tubing rests firmly on the shoulder of the fitting and that the nut is finger-tight. Due to the variation of tubing diameters, a common starting point is desirable. Therefore, use a wrench to snug up the nut until the tubing will not turn (by hand) in the fitting. At this point, scribe the nut and body at the 6 o'clock position of the fitting. Now while holding the fitting body steady with a backup wrench, tighten the nut one-and-one quarter turns. Watching the scribe mark, make one complete revolution and continue to the 9:00 o'clock position.
		Reinstallation	Tubing with preswaged ferrules inserted into the fitting until front ferrule seats in fitting. Tighten nut by hand. Rotate nut about one-quarter turn with wrench (or to original one-and-one quarter tight position), then snug slightly with wrench.

(continued)

TABLE 3. (continued)

Component	General Remarks	Problem	Repair Sequence
Dry Test Meter	These meters are very sensitive to mechanical shock and should be handled with care. Corrosive gas from the stack should never be passed through the meter without prescrubbing.	Incorrect volume readings	Check meter for blockage. Check mechanical linkage for wear. Recalibrate meter.
CCS filter	The G/R filter holder is made out of quartz and especially when it is hot, mechanical shocks will cause breakage. The filter holder is designed to always be run with a filter on the quartz frit. Because of the high temperatures employed, greasing the joints is not recommended.	No seal to filter	Check extension tube. If it is not making a seal, have the glass blower repair. As a temporary repair, a washer out of Tissuequartz can be used to promote a seal.
		Gas leakage	Check thermocouple well for pinhole leak. Check alignment of ball-and-socket joints. Try to maintain linearity. Check seal at joints, clean joints, and retest. Check joints for thermal warping. Replace.
		Plugged frit	Soak in hot chromic acid cleaning bath for 12 hours. Rinse with D.I. H_2O till neutral.
CCC	The coil is an especially delicate piece of equipment. Clear visibility of the coils is necessary to maintain the water jacket's cleanliness.	Gas leakage	Check thermocouple well for pinhole leak. Check alignment of ball-and-socket joints. Try to maintain linearity. Check seal at joints, clean joint, and retest. Check joints for thermal warping. Replace. Soak in hot chromic acid cleaning bath for 12 hours. Rinse with D.I. H_2O till neutral.

8. REFERENCES

1. Federal Register, Volume 41, No. 111, pages 23061-23063.

2. Goksoyr, H. and K. Ross, J. Inst. Fuels, 35, 177 (1962).

3. Lisle, F.S. and J.D. Sensenbaugh, Combustion, 1, 12 (1965).

4. Nacovsky, W., Combustion, 1, 35 (1967).

5. Standard Methods for the Examination of Water and Wastewater, 13th Ed., pages 52-56 (1971).

6. Maddalone R., C. Zee, and A. Grant, "Procedure for Titrimetric Determination of Sulfate Using Sulfonazo III Indicator," TRW Systems, EPA Contract No. 68-02-1412, Task 6, February 14, 1975.

7. E.F. Brooks and R.L. Williams, "Technical Manual for Process Stream Volumetric Flow Measurement and Gas Sample Extraction Methodology," TRW System, EPA Contract 68-02-1412, Task 13, November 1975.

TECHNICAL REPORT DATA
(Please read Instructions on the reverse before completing)

1. REPORT NO. EPA-600/7-79-156	2.	3. RECIPIENT'S ACCESSION NO.
4. TITLE AND SUBTITLE Process Measurement Procedures: H_2SO_4 Emissions		5. REPORT DATE July 1979
		6. PERFORMING ORGANIZATION CODE
7. AUTHOR(S) R. Maddalone and N. Garner		8. PERFORMING ORGANIZATION REPORT NO.
9. PERFORMING ORGANIZATION NAME AND ADDRESS TRW Defense and Space Systems Group, One Space Park, Redondo Beach, California 90278		10. PROGRAM ELEMENT NO. INE624
		11. CONTRACT/GRANT NO. 68-02-2165, Task 202
12. SPONSORING AGENCY NAME AND ADDRESS EPA, Office of Research and Development, Industrial Environmental Research Laboratory, Research Triangle Park, NC 27711		13. TYPE OF REPORT AND PERIOD COVERED Task Final; 6/76 - 2/77
		14. SPONSORING AGENCY CODE EPA/600/13

15. SUPPLEMENTARY NOTES EPA project officer R. M. Statnick is no longer with IERL-RTP; for details, contact F. E. Briden, Mail Drop 62, 919/541-2557.

16. ABSTRACT The report gives procedures to measure H_2SO_4 vapor or aerosols in controlled or uncontrolled flue gas streams. The method was designed to operate at temperatures up to 250 C with 3000 ppm SO_2, 8-16% H_2SO_4, and up to 9 g/cu m of particulate matter. The basis of the method is the clean separation of particulate matter, H_2SO_4 vapor, and SO_2. A heated (>250 C) quartz filter system removes the particulate matter, but passes most of the H_2SO_4 vapor to a modified Graham condenser. There the gas is cooled to about 62 C to condense and collect the H_2SO_4 vapor while passing the SO_2 and H_2O vapor. The condensed acid is titrated with either NaOH using bromophenol blue indicator or $Ba(ClO_4)_2$ using Sulfonazo III as the indicator. The laboratory coefficient of variance is + or - 6% and the estimated field accuracy is + or - 11%. Flyash on the filter was shown to reduce the recovery of H_2SO_4 by 12% at the 10 ppm H_2SO_4 level. Field experiments showed that as little as 0.1 ppm H_2SO_4 could be detected.

17. KEY WORDS AND DOCUMENT ANALYSIS

a. DESCRIPTORS	b. IDENTIFIERS/OPEN ENDED TERMS	c. COSATI Field/Group
Pollution	Pollution Control	13B
Flue Gases		21B
Sulfuric Acid	Stationary Sources	07B
Vapors	Particulate	07D
Aerosols		
Sulfur Dioxide		
Dust		11G

18. DISTRIBUTION STATEMENT Release to Public	19. SECURITY CLASS *(This Report)* Unclassified	21. NO. OF PAGES 45
	20. SECURITY CLASS *(This page)* Unclassified	22. PRICE

EPA Form 2220-1 (9-73)