Complying with the Ground Water Rule: Small Entity Compliance Guide

One of the Simple Tools for
Effective Performance (STEP) Guide Series

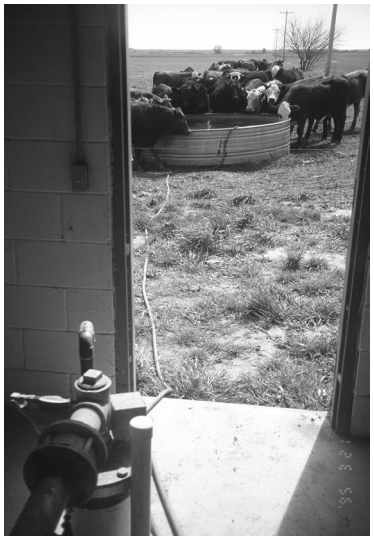

Office of Water (4607M)
EPA 815-R-07-018
www.epa.gov/safewater
July 2007

NOTICE

This guide was prepared pursuant to section 212 of the Small Business Regulatory Enforcement Act of 1996 ("SBREFA"), Pub.L. 104-121. The statements in this document are intended solely as a guide to aid you in complying with the Ground Water Rule [71 FR 65574]. In any civil or administrative action against a small business, small government, or small non-profit organization for a violation of the Ground Water Rule, the content of this guide may be considered as evidence of the reasonableness or appropriateness of proposed fines, penalties, or damages. EPA may decide to revise this guide without public notice to reflect changes to EPA's approach to implementing the Ground Water Rule or to clarify or update text. To determine if EPA has revised this guide and/or to obtain copies, contact EPA's Small Business Ombudsman Office at (800) 368-5888 or (202) 566-2822 (Washington, D.C. metropolitan calling area) or the Office of Ground Water and Drinking Water Safe Drinking Water Hotline at (800) 426-4791 (e-mail: hotline-sdwa@epa.gov).

The statutory provisions and EPA regulations described in this document contain legally binding requirements. While EPA has made every effort to ensure the accuracy of the discussion in this guidance, the obligations of the regulated community are determined by statutes, regulations, or other legally binding requirements. In the event of a conflict between the discussion in this document and any statute or regulation, this document would not be controlling.

The general descriptions provided here may not apply to particular situations based on circumstances. Interested parties are free to raise questions and objections about the substance of this guidance and the appropriateness of the application of this guidance to a particular situation. EPA and other decision-makers retain the discretion to adopt approaches on a case-by-case basis that differ from those described in this guidance where appropriate.

Printed on recycled paper

Contents

STEP #1 - Is This Guide for Me? 1

STEP #2 - What Will I Learn? 2

STEP #3 - What Is the GWR? 3
- General Requirements 3
- Compliance Timetable for Systems Serving Fewer than 10,000 People 5
- What If I Use Both Ground Water and Surface Water in My System? 6
- How Does this Rule Relate to Other Federal, State, and Local Requirements? 6

STEP #4 - What Must I Do During a Sanitary Survey? 7

STEP #5 - What Are the Triggered Monitoring Requirements? 8
- What If I Am Supplied with Ground Water by Another Water System? 8
- What If I Have More than One Ground Water Source? 9
- What If I Have Problems Collecting My Triggered Source Water Sample? 9
- Is Triggered Source Water Monitoring Always Required? 10
- Will A TCR Repeat Sample Meet the Requirements for A Triggered Source Water Sample Under the GWR? 10

STEP #6 - What Are the GWR Assessment Monitoring Requirements? 11

STEP #7 - What Am I Required to Do If I Have Any Fecal Indicator-Positive Source Water Samples? 11
- What If I Believe that a Source Water Sample that is Fecal Indicator-Positive is Due to a Lab Error or Other Cause Rather than Source Water Contamination? 12

STEP #8 - Corrective Action for Significant Deficiencies or Source Water Fecal Indicator-Positives 13
What Corrective Actions are Required Under the GWR? 13
When Does Corrective Action Have to be Completed? 13
What Are the Requirements if the State Approves Treatment/Disinfection as a Corrective Action? 14
What Are the Compliance Monitoring Requirements for Disinfection and Other Treament? 15
If I Already Provide Disinfection or Other Treatment for My System, What Requirements Apply? 16
May I Stop Treatment if the Need to Treat no Longer Exists? 16

STEP #9 - What Must I Report and What Records Must I Keep in My Files? 17
Public Notification to Consumers 17
Information Reported to the State 17
Records You Must Keep in Your Files 18

STEP #10 - Where Do I Go for Help? 19
Financial Assistance 19
Major Providers of Financial Assistance to Drinking Water Systems 20
Other Potential Sources of Financing or Financial Assistance to Drinking Water Systems 21

STEP #11 - How Do I Protect My Source Water from Contamination? 22

Appendix A: Glossary of Selected Terms Used in this Guide 23

Appendix B: Where to Obtain More Information 26

Appendix C: SDWA Primacy Agencies and Tribal Contacts 28

Appendix D: Other STEP Documents Available from EPA 35

Appendix E: Determining if a Disinfection System Provides 4-log Inactivation of Viruses 36

Appendix F: Example-Systems with More than One Ground Water Source..... 42

Additional copies of this guide are available through the Safe Drinking Water Hotline at (800) 426-4791. Please reference document number EPA 815-R-07-018. You can also download the guide from EPA's Safe Drinking Water Web site at www.epa.gov/safewater/smallsys/ssinfo.htm

Acronyms

DWSRF:	Drinking Water State Revolving Fund
EPA:	United States Environmental Protection Agency
gpm:	gallons per minute
GWR:	Ground Water Rule
MCL:	Maximum Contaminant Level
mg/l:	milligrams per liter
MWCO:	Molecular Weight Cut Off
PWS:	Public water system
SBREFA:	Small Business Regulatory Enforcement Fairness Act
SDWA:	Safe Drinking Water Act, or the "Act," as amended in 1986 and 1996
SWAPP:	Source Water Assessment and Protection Program
SWTR:	Surface Water Treatment Rule
TCR:	Total Coliform Rule
UV:	Ultraviolet light
WHP:	Wellhead Protection Program

STEP #1 - Is This Guide for Me?

This guide is designed for owners and operators of public water systems (PWSs) serving 10,000 or fewer persons that are required to comply with the Ground Water Rule (GWR). The GWR applies to all public water systems that are supplied by a ground water source, including wholesale and consecutive water systems, and public water systems that are supplied by both surface water and ground water. Consecutive systems include all systems that buy or otherwise receive some or all of their finished water from another public water system on a regular basis. The GWR does not apply to PWSs that combine all their ground water with surface water, or with ground water under the direct influence of surface water (GWUDI), prior to treatment under subpart H of Part 141 CFR ("Filtration and Disinfection").

Systems:	All PWSs that use ground water.
Sources:	Ground water sources.
Population Served:	All sizes.
Treatment:	Both treated and untreated ground water sources.

Systems that will typically find this guide useful include:

- Small towns
- Rural water districts
- Tribal systems
- Manufactured housing parks
- Home owners associations
- Small private systems
- Factories, schools, and religious institutions that have their own water supplies

Ground water sources include vertical and horizontal wells, springs, springboxes, and infiltration galleries. For the purposes of the GWR, "well" includes any structure that obtains drinking water from a source that is not regulated as a surface water source or as ground water under the direct influence of surface water. Contact your State for guidance if you have a source that is ground water under the direct influence of surface water that the State has not previously reviewed.

STEP #2 - What Will I Learn?

As a drinking water system owner or operator, your most important job is protecting the health of your customers. This guide will help you perform this job by providing information about:

- How the GWR affects your system.
- Your monitoring responsibilities under the GWR.
- Your responsibilities for correction of source water fecal contamination and significant deficiencies.
- Sources of funding for compliance with the GWR compliance requirements.

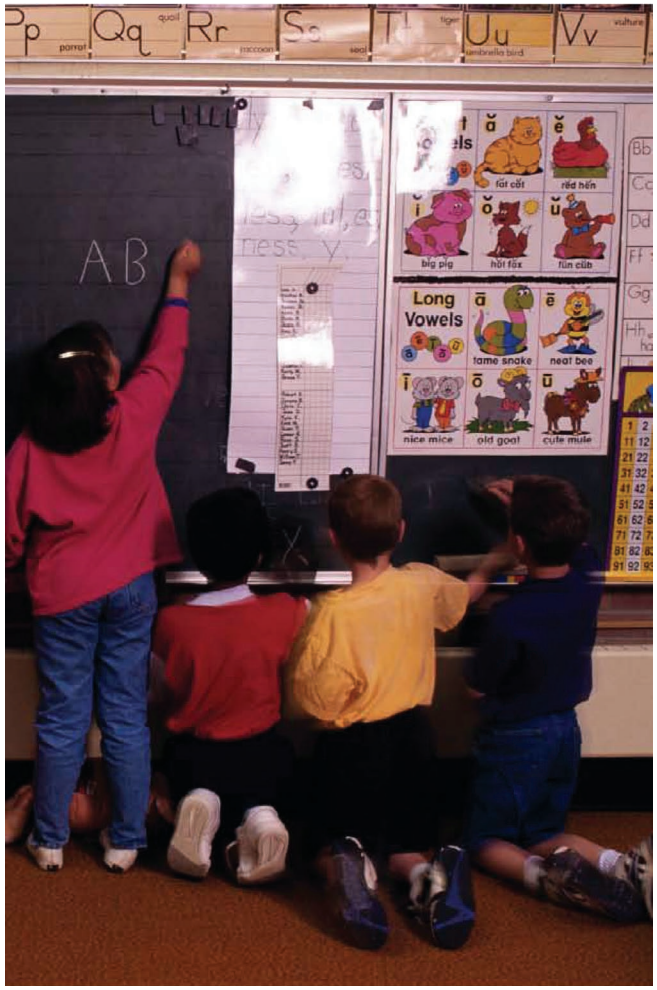

Appendix A contains a glossary of terms used both in the rule and in this guide. Appendix B lists additional resources for the GWR that you might find helpful and detailed instructions on how to order them, including how to get a complete copy of the rule. Appendix C lists contacts for States and tribes. Appendix D identifies other STEP guides that EPA has developed to assist small systems.

STEP# 3 - What Is the GWR?

The purpose of the GWR is to provide for increased protection against microbial pathogens in public water systems that use ground water sources. EPA is particularly concerned about ground water systems that are susceptible to fecal contamination since disease-causing microorganisms (pathogens) may be found in fecal contamination. The targeted, risk-based strategy of the GWR addresses risks through an approach that relies on four major components. Those components are (1) periodic sanitary surveys of systems that require the evaluation of eight critical elements of a public water system and the identification of significant deficiencies; (2) triggered source water monitoring when a system identifies a positive sample during its Total Coliform Rule monitoring and assessment monitoring (at the option of the State) targeted at high-risk systems; (3) corrective action for any system with a significant deficiency or source water fecal contamination; and (4) compliance monitoring to ensure that treatment technology installed to treat drinking water reliably achieves 99.99 percent (4-log) inactivation and/or removal of viruses.

General Requirements

To comply with the GWR, published on November 8, 2006 (71 FR 65574), systems must do the following:

- If requested by the State, provide existing information to the State to aid the State in performing a sanitary survey.
- If requested by the State, provide existing information to the State to aid the State in performing a hydrogeologic sensitivity assessment for your system.
- If required by the State, perform assessment microbial monitoring of your ground water sources.
- Collect samples from your ground water sources after a routine Total Coliform Rule (TCR) positive if you do not provide 4-log virus treatment for all your sources, and have the samples analyzed for a fecal indicator specified by the State.
- If you use ground water supplied by another public water system, report TC-positive samples in your water system to your wholesale supplier.

- Correct any significant deficiencies identified by the State or address fecal contamination of your ground water source as determined by certain positive microbial source water samples.

- Keep records and report to the State as required by the GWR.

- If you use treatment to comply with the GWR, monitor that treatment.

- Provide information and public notification to the public when required.

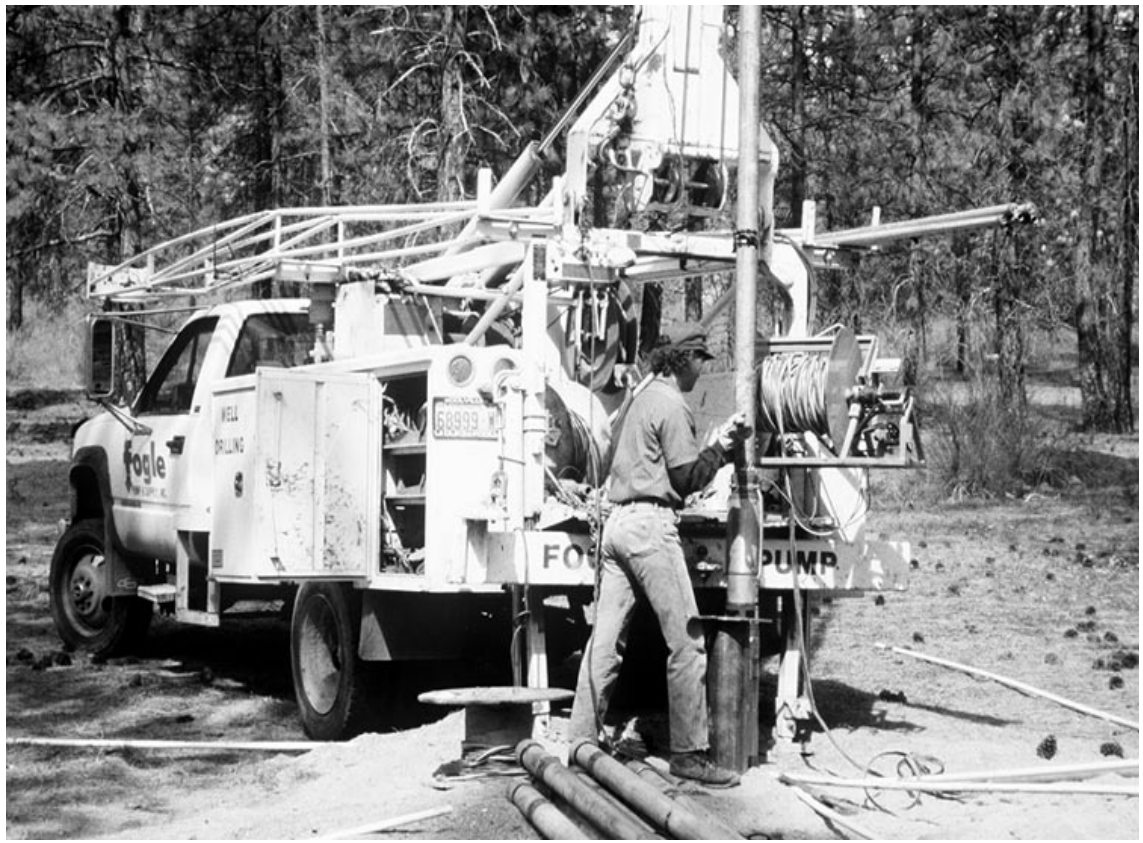

Compliance Timetable for Systems Serving Fewer than 10,000 People

GWR Requirement	Compliance Date (s)
If you do not provide 4-log virus treatment for all your ground water sources, you must meet the triggered source water microbial monitoring requirements.	Beginning December 1, 2009 (§141.402(a)).
If you use ground water supplied by another public water system, you must report any TC-positive samples in your water system to your wholesale supplier.	Beginning December 1, 2009 (§141.402(a)(4)).
You must correct source fecal contamination.	Within 120 days of notification of a fecal indicator-positive sample in any of the five additional source water samples under §141.402(a)(3), within 120 days of direction by the State to provide corrective action for an initial fecal indicator-positive source sample under §141.402(a)(2), or in accordance with a state-approved plan and schedule for correction.
You must correct significant deficiencies identified by the State.	Within 120 days of notification of the deficiency by the State or in accordance with a state-approved plan and schedule for correction (§141.403(a)).

Both wholesale and consecutive systems must comply with the GWR. Wholesale systems must conduct triggered source water monitoring if notified of a TC-positive by a consecutive system. Consecutive systems are responsible for notifying their wholesale suppliers of TC-positive samples in the consecutive system's distribution system. Consecutive systems with their own ground water sources are subject to all GWR requirements for source water monitoring for those sources.

What If I Use Both Ground Water and Surface Water in My System?

Unless all your ground water sources are combined with surface water (or GWUDI) prior to treatment under subpart H you must:

- Meet the requirements of the GWR for triggered source water monitoring (and hydrogeologic sensitivity assessments and assessment source water monitoring, if directed by the State) if you do not provide 4-log treatment of viruses for all your ground water sources.

- Meet the requirements of the GWR to correct significant deficiencies unless the State determines that the significant deficiency is in a portion of your system that is served solely by surface water.

How Does this Rule Relate to Other Federal, State, and Local Requirements?

EPA published the GWR to provide for increased protection against microbial contamination in public water systems that use ground water sources. You are still required to continue to meet all existing applicable federal requirements. You may call the Safe Drinking Water Hotline at (800) 426-4791 (e-mail: hotline-sdwa@epa.gov) for more information on other drinking water rules.

This compliance guide explains your federal compliance obligations for the GWR. There may be additional State or local drinking water regulations for public water systems using ground water sources which apply to you which are different from, or more stringent than, the Federal requirements. For more information on the regulations that apply to your system in your State, please contact your State drinking water office. State contacts can be found by calling the Safe Drinking Water Hotline at (800) 426-4791 (e-mail: hotline-sdwa@epa.gov).

STEP #4 - What Must I Do During a Sanitary Survey?

You must provide any existing information the State requests that would allow the State to perform a sanitary survey (§141.401).

STEP #5 - What Are the Triggered Monitoring Requirements?

If you do not provide at least 4-log virus inactivation and/or removal, or a state-approved combination of 4-log virus inactivation and removal, for all your ground water sources before or at the first customer, you must conduct triggered monitoring if you are notified by your laboratory of a total coliform-positive (TC-positive) sample collected under the Total Coliform Rule (TCR), 40 CFR §141.21, (§141.402(a)). This requirement is effective December 1, 2009.

For triggered monitoring, you must collect a source water sample from each well within 24 hours of being notified of a TC-positive sample and have the sample tested for the fecal indicator specified by the State (§141.402). The State may allow you to sample a single well or fewer than all your wells if you have a state-approved sampling plan. See the section entitled "Systems with more than one ground water source". Ground water source samples must be collected before any treatment is applied unless the State approves an alternate location (§141.402(e)(1)).

If any triggered monitoring sample is fecal indicator-positive, you must collect five additional source water samples from the same source within 24 hours of being notified of the fecal indicator-positive sample. However, the State may direct you to take corrective action after the first fecal indicator-positive sample. In that case, you are not required to collect the five additional samples (§141.402(a)(3)).

What If I Am Supplied with Ground Water by Another Water System?

- If you use ground water supplied by another water system and you have a TC-positive sample, you are required to notify your supplier about the positive sample within 24 hours of being notified by the laboratory of a TC-positive in your water system. You may wish to develop a notification procedure with contact information (including after-hours contacts) so that both you and your supplier can meet the requirements of the GWR.
- You are still subject to sanitary surveys, and you are required to correct any significant deficiencies identified in your system, even if you receive your entire supply from another water system.
- If you use ground water supplied by another water system, and you also have your own ground water supply, you are subject to all the requirements of the GWR, including source water monitoring after a TC-positive sample. More information on systems that use both a wholesale ground water supply and their own ground water supply can be found in the *Consecutive System Guide For the Ground Water Rule* (EPA 815-R-07-020) which is available on-line at www.epa.gov/safewater/disinfection/gwr/index.html and from the EPA Water Resource Center at (202) 566-1729 (see e-mail address in Appendix B)).

What If I Have More than One Ground Water Source?

If you have more than one ground water source and have a TC-positive sample in your distribution system, the GWR requires that you take a sample from each ground water source (each well) after a TC-positive result and test the sample for a state-approved fecal indicator (e.g., *E. coli*, coliphage, enterococci) unless you have a state-approved plan that allows to sample fewer than all of your ground water sources. The monitoring plan must identify a source water sample location that is representative of the water delivered to each TCR sampling site in your system (§141.402(a)).

A triggered source water monitoring plan can help ensure the correct source is sampled without collecting unnecessary samples. The GWR requires that a triggered source sample be collected within 24 hours of being notified of a TC-positive sample. A monitoring plan can also help you to make a decision about where to collect a sample more rapidly.

A triggered source water monitoring plan should identify every TCR monitoring site in your system (from your approved TCR monitoring plan) and the well or wells that serve that TCR monitoring site. Your monitoring plan should identify if you rotate the wells you use on a regular basis or if you use a well only during certain times of the year. With a detailed monitoring plan approved by the State, you and the State can have confidence that the correct source is being sampled after a TC-positive sample without collecting a sample from every source in your system.

What If I Have Problems Collecting My Triggered Source Water Sample?

If you cannot collect a triggered source sample within 24 hours due to circumstances beyond your control, the State may extend the 24-hour time limit on a case-by-case basis.

Is Triggered Source Water Monitoring Always Required?

Yes, unless you believe that a routine TC-positive sample is due to distribution system contamination or a distribution system deficiency, rather than source water contamination. In those cases, you may request that the State allow an exception to the triggered source water monitoring on a case-by-case basis. If the State allows such an exception:

- The State is required to make a determination that the total coliform positive sample is caused by a distribution system deficiency.
- If the State decides to waive triggered source water monitoring, the GWR requires that the State document the decision in writing.
- You should have information that demonstrates the distribution system deficiency that caused the positive sample available for the State when you make your request for a waiver.

The State can also establish criteria for distribution system conditions that will cause total coliform-positive samples. If the total coliform-positive sample was collected under conditions that meet those state-specified criteria, you are not required to conduct triggered source water monitoring. You must notify the State within 30 days of the total coliform-positive sample that met State criteria for an exception to the triggered monitoring requirements of the GWR (§141.405(a)(3)).

Will A TCR Repeat Sample Meet the Requirements for a Triggered Source Water Sample Under the GWR?

If you have a TC-positive sample and if you collect one or fewer TCR samples per month, you may use one of your TCR repeat samples to satisfy the triggered source water sample requirement of the GWR if :

- One of the required four TCR repeat samples is collected from your ground water source, and
- The sample collected from your ground water source is tested for *E. coli* (§141.402(a)(2)) and the State approves *E. coli* as a fecal indicator.

You may wish to contact your State and discuss where the sample should be collected. The GWR requires that a triggered source sample be collected within 24 hours of being notified of a TC-positive sample, so it is important that you and your State understand where the triggered source sample should be collected before a TC-positive sample occurs.

If you do not have a sample tap at or near your source, you should consider installing one. Knowing the cause of the fecal contamination (well defect, source water, or distribution system problem) will help you and the State identify the most appropriate corrective action if a fecal indicator is present in the source water.

STEP #6 - What Are the GWR Assessment Monitoring Requirements?

The State may also require you to conduct assessment source water monitoring, which requires you to regularly monitor each source (or representative sources) on a state-specified schedule (§141.402(b)). This monitoring may include regular monitoring (e.g., monthly) for an extended period (e.g., 12 months).

The State may conduct a Hydrogeologic Sensitivity Assessment (HSA) to determine if your source(s) draw(s) ground water from a sensitive hydrogeologic setting and to determine if assessment monitoring is appropriate. If the State conducts an HSA, the GWR requires that you provide the State with any existing information you have that will enable it to complete the HSA (§141.400(c)(5)).

STEP #7 - What Am I Required to Do If I Have Any Fecal Indicator-Positive Source Water Samples?

If any source water sample from your system is fecal indicator-positive (positive for *E. coli*, coliphage, or enterococci), you must take five additional source samples within 24 hours of being notified of the test result. The GWR requires that you take corrective action if any of the five source water samples collected after an initial fecal indicator-positive triggered source water sample (§141.403(a)) is positive. The State may require you to take corrective action after the initial fecal indicator-positive triggered source water sample or after any fecal indicator-positive found in assessment source water monitoring.

The GWR also requires that you notify the public (Tier 1 notice) of a fecal indicator source water positive and, if you are a community water system, that you include information about the fecal indicator-positive source water sample in your Consumer Confidence Report (CCR). See Appendix B for guidance materials available to assist you in providing public notification and in preparing your CCR.

What If I Believe that a Source Water Sample that is Fecal Indicator-Positive is Due to a Lab Error or Other Cause Rather than Source Water Contamination?

You may apply to the State and the State may invalidate a fecal indicator-positive sample if the laboratory establishes that improper sample analysis occurred or if the State has substantial grounds to believe that a sample result is due to circumstances that do not reflect source water quality.

- If the State invalidates a fecal indicator-positive sample, then the GWR requires that the State document the decision in writing.
- You should have information from the laboratory about the analysis, or information that demonstrates that the result does not reflect source water quality, available for review when you make your request.
- If the State invalidates a fecal indicator-positive source water sample, the GWR requires that you collect another source water sample and have it analyzed for the same indicator within 24 hours of being notified of the invalidation.

STEP #8 - Corrective Action for Significant Deficiencies or Source Water Fecal Indicator-Positives

What Corrective Actions are Required Under the GWR?

You must correct any significant deficiencies identified by the State during a sanitary survey. You must also take corrective action if any of the additional five source water samples collected after an initial fecal indicator-positive source water sample is also fecal indicator-positive. The State may also require you to take corrective action after the initial fecal indicator-positive source water sample or if a fecal indicator-positive sample is found during assessment source water monitoring (§141.403(a)(1)&(2)).

Corrective action includes one or more of the following:

- Eliminating the source of contamination, (e.g., remove point source, relocate waste disposal, redirect drainage, install wellhead housing),
- Correcting the significant deficiency, (e.g., repairs to well pad and seal, distribution system repairs, cross connection control),
- Providing an alternate source water, (e.g., new well, connection to another PWS), or
- Providing treatment which reliably achieves at least 99.99 percent (4-log) inactivation and/or removal of viruses before or at the first customer.

When Does Corrective Action Have to be Completed?

Unless the State directs you to take a specific corrective action, you must consult with the State (§141.403(a)(4)) regarding the appropriate corrective action within 30 days of:

- Notification by the laboratory that one of the five additional source water samples collected after the initial fecal indicator-positive source water is also fecal indicator-positive, or
- Notification by the State of a significant deficiency, or
- Notification by the State to take corrective action for the initial fecal indicator-positive sample collected after a TC-positive or for any fecal indicator-positive sample collected for assessment source water monitoring.

You must complete the corrective action(s) within 120 days of notification by the laboratory or the State, or you must:

- Develop a specific plan and schedule to complete the corrective action,
- Submit the plan and schedule to the State before the end of the same 120 day period (the State may also require you to modify the plan or schedule), and
- Comply with the state-approved plan and schedule, including interim measures (§141.403(a)(5)).

What Are the Requirements If the State Approves Treatment/Disinfection as a Corrective Action?

If the State approves or directs treatment/disinfection as a corrective action, you must provide reliable and continuous treatment that is capable of providing at least 4-log (99.99%) inactivation and/or removal of viruses (§141.404(a)). The State will determine which technologies are appropriate for achieving at least 4-log inactivation and/or removal of viruses for your system. Compliance monitoring of the disinfection process is required to evaluate the effectiveness and reliability of disinfection.

What Are the Compliance Monitoring Requirements for Disinfection and Other Treatment?

If you use **chemical disinfection** and	
(A) Your system serves **more** than 3,300 people	• You must **continuously** monitor (and maintain) the state-determined residual disinfectant concentration that provides 4-log inactivation of viruses at or before the first customer every day the system serves water to the public (§141.403(b)(3)(i)(A)).
(B) Your system serves 3,300 **or fewer** people	• You must monitor (and maintain) the state-determined residual disinfectant concentration that provides 4-log inactivation of viruses at or before the first customer every day the system serves water to the public. • You must monitor by taking a daily grab sample during the hour of peak flow or another time specified by the State. You may also use continuous monitoring. • If any daily grab sample measurement falls below the state-determined residual disinfectant concentration, you must take follow up samples every fifteen minutes until the residual disinfectant concentration is restored to the state-determined level (§141.403(b)(3)(i)(B)).

If you treat using:	
Membrane Filtration [1]	You must operate in accordance with state-specified compliance criteria under §142.16(o)(4)(v),or as provided by EPA, and demonstrate that the integrity of the membrane is intact (§141.403(b)(3)(ii)).
Alternative Treatment Technologies [2]	You must operate in accordance with state-specified compliance criteria under §142.16(o)(4)(iv) or as provided by EPA (§141.403(b)(3)(iii)).

[1] Membrane filtration technologies must have absolute molecular weight cut offs (MWCOs), or an alternate parameter that describes the exclusion characteristics of the membrane, that can reliably achieve at least 4-log virus removal.
[2] Alternative treatment technologies must achieve at least 4-log virus inactivation and/or removal alone or in combination with another treatment technology and must be approved by the State.

If I Already Provide Disinfection or Other Treatment for My System, What Requirements Apply?

- If you are providing treatment of your ground water sources in your system and the State has determined that the treatment is capable of providing 4-log inactivation and/or removal of viruses, you must meet the treatment/disinfection and compliance monitoring requirements of the GWR (§141.403(b)). You may choose to meet the triggered monitoring requirements of the GWR (see Step #5) instead of meeting the treatment/disinfection and compliance monitoring requirements.

- If your disinfection or treatment does not provide 4-log inactivation and/or removal of viruses as determined by the State, you must also meet the triggered monitoring requirements if you have a TC-positive sample (§141.402).

- Appendix E describes the kind of information the State will need in order to determine if your system provides 4-log inactivation through disinfection and an example of how 4-log inactivation through disinfection is determined.

May I Stop Treatment If the Need to Treat No Longer Exists?

You may discontinue 4-log inactivation and/or removal of viruses if the State determines that the need for 4-log inactivation and/or removal of viruses no longer exists based on State criteria, which may include an on-site investigation and source water monitoring. The State is required to document that determination in writing (§141.403(c)). Once you discontinue treatment, you will be subject to the source water microbial monitoring requirements (see Step #3) and, if a fecal indicator is found in your ground water source, the corrective action (see Step #8) and notification requirements (see Step #7).

STEP #9 - What Must I Report and What Records Must I Keep in My Files?

You must report certain information to the consumers served by your water system (§141.153, §141.202, §141.203, §141.204, §141.403(a)(7)) and to the State (§141.405(a)). You must keep additional records in your files (§141.405(b)).

Public Notification to Consumers

The GWR requires you to provide public notification to consumers if you:

- Find a fecal indicator (*e.g,. E. coli*, coliphage, enterococci) in your ground water source (Tier 1 notice within 24 hours).
- Fail to collect source water samples after a TC-positive sample or when the State requires assessment source water monitoring (Tier 3 notice within one year).
- Fail to correct source water fecal contamination or a significant deficiency within 120 days of notification or in accordance with a state-approved schedule (Tier 2 notice within 30 days).
- Have any significant deficiency that has not been corrected at the time of your next CCR (or within 12 months for non-community systems). (Public notification must be done through the next CCR for community water systems or as directed by the State for non-community water systems).
- Fail to meet the performance, monitoring or compliance requirements for any treatment provided to meet the 4-log virus treatment requirements of the GWR (Tier 2 notice within 30 days).

See Appendix B for Guidance materials available to assist you in providing public notification and in preparing your CCR.

Information Reported to the State

In addition to the reporting requirements for all drinking water regulations (see 40 CFR §141.31), you must provide the following information to the State:

- You must consult with the State regarding public notification for any fecal indicator-positive source water sample (§141.202).
- You must notify the State if you fail to meet any state-specified requirements for treatment, including, but not limited to, minimum residual disinfectant concentration, membrane operating criteria, membrane integrity, and alternate operating criteria, and you do not restore operation in accordance with any state-specified criteria or requirement within four hours (§141.405(a)(1)).
- You must notify the State within 30 days of completing any corrective action for fecal source water contamination or a significant deficiency (§141.405(a)(2)).
- If you do not conduct source water monitoring after a TC-positive because you met State criteria for an exception to the source water monitoring requirements of the GWR, you must notify the State, within 30 days of the TC-positive, that the TC-positive sample met the State criteria (§141.405(a)(3)).

Records you Must Keep in Your Files:

In addition to the record keeping requirements for all drinking water requirements (see 40 CFR §141.33), you must maintain the following information in your records (§141.405(b)):

- Documentation of any corrective actions taken for fecal indicator-positive source water samples or for significant deficiencies.
- Documentation of any special notice to the public of a fecal indicator-positive source water samples or a significant deficiency.
- Records of meeting state-specified criteria for exceptions to triggered source water monitoring and records of invalidation of fecal indicator-positive source water samples.
- Documentation of notification to the wholesale system(s) of TC-positive samples by consecutive systems.
- Records of the state-specified minimum residual disinfectant concentration, records of the lowest daily residual disinfectant concentration, and the date and duration of any failure to meet the state-specified minimum residual disinfectant concentration for more than four hours.
- Records of the state-specified compliance requirements for membrane filtration and parameters specified by the State for state-approved alternative treatment, as well as records of failure to meet the membrane operation membrane integrity or alternate treatment operating requirements for more than four hours.

STEP #10 - Where Do I Go for Help?

There are many sources of information available to help you meet the requirements in this rule.

- You can contact your State drinking water agency.
- You can review EPA's guidance manuals (see Appendix B) or contact EPA's regional drinking water office or EPA's Safe Drinking Water Hotline at (800) 426-4791 (e-mail: hotline-sdwa@epa.gov).
- You can contact your State chapters of organizations such as the National Rural Water Association and the American Water Works Association which often offer technical assistance to small facilities.

Financial Assistance

Correcting source water contamination or significant deficiencies, modifying or installing treatment, purchasing water or consolidating with another water system, and developing a new water source can be expensive. System improvements can be funded by raising rates, issuing bonds, or by successfully applying for loans or grants. The tables below provide information on some programs that may provide financial assistance to help you comply with the GWR.

Major Providers of Financial Assistance to Drinking Water Systems

Name of Program	Description	Contact Information
Drinking Water State Revolving Fund (DWSRF)	The DWSRF makes low-interest and interest-free loans to water systems to finance infrastructure improvements. States can "set aside" funds from their annual EPA grant to provide technical assistance to small systems and to finance small system improvement projects.	www.epa.gov/safewater/dwsrf/ Safe Drinking Water Hotline at (800) 426-4791
USDA Rural Development - Water and Environmental Program	This program offers loans and grants to rural areas to develop water systems and to reduce the user costs of these systems.	www.usda.gov/rus/water (202) 690-2670
State-specific Programs	Your State may offer additional funding programs.	See Appendix C.
Tribal-specific Programs	EPA makes direct grants (not loans) to Tribes through the DWSRF Tribal Set-Aside Program for improvements to water systems that serve Tribes. States and the Indian Health Service may provide additional financial assistance.	See Appendix C.

Other Potential Sources of Financing or Financial Assistance to Drinking Water Systems

Name of Program	Description	Contact Information
Community Development Block Grants (CDBG)	This program offers grants to disadvantaged cities, urban counties, and States to develop viable urban communities.	www.hud.gov/grants/index.cfm (202) 708-1112
Public Works and Infrastructure Development Grants	These grants help distressed communities overcome barriers that inhibit the growth of their local economies.	www.eda.gov/AboutEDA/Programs.xml
National Bank for Cooperatives Loan Program (CoBank)	CoBank provides loans to larger creditworthy and rural utilities.	www.cobank.com (800) 542-8072
Rural Community Assistance Partnership (RCAP)	RCAP provides loans to rural communities to help meet the financing needs of rural communities and disadvantaged populations.	www.rcap.org/ (202) 408-1273

STEP #11 - How Do I Protect My Source Water from Contamination?

You can prevent fecal contamination from threatening your drinking water source by controlling or eliminating fecal sources that are within the range of your well and by protecting the area around the wellhead from fecal contamination. EPA's Wellhead Protection Program (WHP) and Source Water Assessment and Protection Program (SWAPP) encourage pollution prevention by requiring States to assess sources of public drinking water and to develop Wellhead Protection programs. To find out more about these two programs and the tools that have been developed which may help you protect your source water, contact your State WHP or SWAPP or EPA's Safe Drinking Water Hotline at (800) 426-4791 (e-mail: hotline-sdwa@epa.gov). Information is also available at cfpub.epa.gov/safewater/sourcewater/.

The sanitary survey required under the GWR is an opportunity for you to obtain additional information about protecting and maintaining your ground water source as well as learning more about the other requirements of the GWR. The sanitary survey can identify things that you can look for during your daily rounds or routine to further protect and improve your water system. You can also use this guide to prepare questions to ask during the sanitary survey.

If the State has completed a Source Water Assessment for your ground water source and it has identified potential contamination activities near your well, you may wish to review the assessment and discuss it with your State to determine what actions you can take to better protect your ground water supply. Even if you do not control all the area surrounding your well, you may be able to take some steps to protect it.

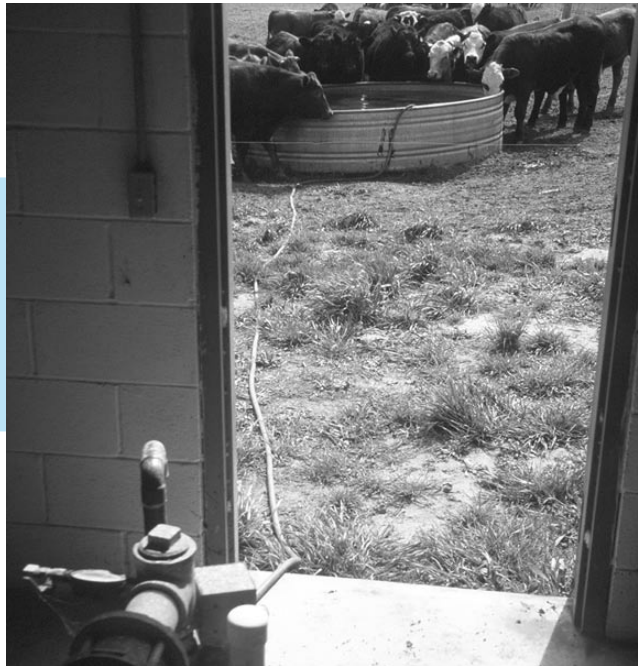

Appendix A: Glossary of Selected Terms Used in this Guide

Assessment source water monitoring - For the GWR, monitoring of ground water sources determined by the State to be vulnerable to contamination. Assessment monitoring consists of collection of source water samples and analysis of those samples for a fecal indicator specified by the State.

Community water system - A public water system which serves at least 15 service connections used by year-round residents or regularly serves at least 25 year-round residents.

Consecutive system - A public water system that receives some or all of its finished water from one or more wholesale systems. Delivery may be through a direct connection or through the distribution systems of one or more consecutive systems.

Corrective action - Action taken in response to a fecal indicator-positive source water sample or a significant deficiency. Corrective action includes one or more of the following: eliminating the source of contamination, correcting the significant deficiency, providing an alternate source water, or providing treatment which reliably achieves at least 99.99 percent (4-log) inactivation and/or removal of viruses before or at the first customer.

CT - For a chemical disinfectant (chlorine, chloramine, ozone) the result of multiplying the disinfectant residual concentration, C, by the contact time, T, in the water system from the point where the disinfectant is applied to the point where the residual is measured.

Fecal indicator-positive - A sample in which the laboratory identifies *E. coli*, coliphage, or enterococci.

Ground water system - For the purposes of the GWR, any public water system that serves ground water is a ground water system including wholesale and consecutive systems and public water systems that serve both surface water (or ground water under the direct influence of surface water) and ground water. Public water systems that combine all their ground water with surface water (or ground water under the direct influence of surface water) prior to treatment to meet the requirements of Subpart H are not subject to the requirements of the GWR.

Hydrogeologic sensitivity assessment - A methodology used to identify whether systems are obtaining ground water from hydrogeologic settings that are sensitive to fecal contamination.

Membrane Filtration - Generally, a pressure-driven or vacuum-driven process that physically excludes particles of a certain size. For the purposes of the GWR, membrane filtration includes reverse osmosis (RO), nanofiltration (NF) and any membrane filters that have absolute molecular weight cut offs (MWCOs) that can achieve 4-log virus removal.

Non-community water system - A public water system that is not a community water system.

Pathogens - Disease-causing microbial contaminants including bacteria, protozoa (*Giardia*, *Cryptosporidium*), and viruses.

Primacy agency - The agency with primary enforcement authority for the Safe Drinking Water Act. The primacy agency is referred to as the "State" in this document but this also refers to EPA and any tribal government for systems that have one of them as a primacy agency.

Sanitary survey - A "sanitary survey", as conducted by the State, includes but is not limited to an onsite review of the water source (identifying sources of contamination by using results of source water assessments or other relevant information, where available), facilities, equipment, operation, maintenance, and monitoring compliance of a public water system to evaluate the adequacy of the system, its sources and operations and the distribution of safe drinking water.

Significant deficiency - A "significant deficiency" includes, but is not limited to, a defect in design, operation, or maintenance, or a failure or malfunction of the sources, treatment, storage, or distribution system that the State determines to be causing, or has the potential for causing, the introduction of contamination into the water delivered to consumers.

Subpart H system - A public water system serving surface water or ground water under the direct influence of surface water. These systems are subject to the filtration and disinfection requirements of 40 CFR Subpart H.

Treatment technique violation - Violation of a treatment technique established in lieu of a Maximum Contaminant Level. For the GWR, this includes failure to provide corrective action for fecal contamination of a ground water source and failure to correct significant deficiencies. Treatment technique violations require the system to provide public notification, and systems in violation of treatment technique requirements are subject to enforcement actions by the State and EPA.

Triggered monitoring - For the GWR, monitoring of ground water sources after a system is notified of positive total coliform samples collected under the TCR. Triggered monitoring consists of collection of source water samples and analysis of those samples for a fecal indicator specified by the State.

UV disinfection - A disinfection process exposing the water supply to ultraviolet light (irradiation) to provide pathogen inactivation.

Well - For the purposes of the GWR, the term "well" includes springs, spring boxes, vertical and horizontal wells, infiltration galleries and any other method of delivering ground water.

Wholesale system - A wholesale system is a public water system that treats source water as necessary to produce finished water and then delivers some or all of that finished water to another public water system. Delivery may be through a direct connection or through the distribution system of one or more consecutive systems.

Appendix B: Where To Obtain More Information

EPA has developed guidance manuals to aid EPA, State agencies, and you in implementing the GWR and other rules and to help to ensure consistent implementation.

Consider the Source: A Pocket Guide to Protecting Your Source: Drinking Water Pocket Guide #3. For States, public water systems, local governments and consumers. This guide includes a discussion of Clean Water Act and Safe Drinking Water Act based regulatory and voluntary resources, tools, and management measures available for protecting drinking water sources. The Guide also includes available Best Management Practices for source water protection areas. An electronic version is available at www.epa.gov/safewater/sourcewater.

Surface Water Treatment Rule Guidance Manual. For primacy agencies and public water systems. This manual provides guidance on the applicability and regulatory requirements of the Surface Water Treatment Rule including the filtration and disinfection requirements for systems supplying surface water. The Appendices provide the basis for CT values and include guidance for determining disinfection contact, measuring disinfectant residual and means for providing redundant disinfection capability. The Appendices also include CT tables for the inactivation of *Giardia* and viruses for chlorine, chlorine dioxide and ozone.

Revised Public Notification Handbook (EPA 816-R-07-003). For public water systems required to provide public notification. This handbook provides instructions and includes templates that public water systems can use for various types of public notification. An electronic version is available at www.epa.gov/safewater/publicnotification/.

Public Notification Handbook for Transient Non-Community Water Systems (EPA 815-R-07-004). This guide was developed for transient non-community water systems. It provides instructions and includes templates that can be used for various types of public notices.

Consumer Confidence Report Rule: A Quick Reference Guide (EPA 816-F-02-026). A condensed guide that provides a brief overview of the Consumer Confidence Report Rule. An electronic version is available at www.epa.gov/safewater/ccr.

Preparing Your Drinking Water Consumer Confidence Report (CCR) Guidance for Water Suppliers (EPA 816-R-002, April 2005). This document provides information to assist drinking water systems with preparing and distributing CCRs.

For more information, contact EPA's Safe Drinking Water Hotline, (800) 426-4791, or see the Office of Ground Water and Drinking Water Web page at www.epa.gov/safewater/index.html.

To order a copy of one of these guidance manuals you may contact the US EPA Water Resource Center at (202) 566-1729 or by mail at
US Environmental Protection Agency
Water Resource Center (RC-4100)
1200 Pennsylvania Ave NW
Washington DC 20460
E-mail: center.water-resource@epa.gov

EPA expects to develop a series of guidance manuals to specifically support implementation of the Ground Water Rule. The manuals will aid EPA, State agencies, and you in consistently implementing and complying with the GWR. All of the materials will be available on the EPA Web site at www.epa.gov/safewater/disinfection/gwr.

Consecutive System Guide For the Ground Water Rule (EPA 815-R-07-020). For primacy agencies and wholesale and consecutive public ground water systems. This guide includes information on triggered monitoring, explains the responsibilities of both wholesale and consecutive systems for triggered monitoring, discusses monitoring strategies for consecutive systems with their own sources or with connections to multiple wholesale systems and for wholesale systems with multiple sources, and provides examples of triggered monitoring approaches for consecutive systems.

Corrective Action Guidance Manual. For primacy agencies and wholesale and consecutive public ground water systems. This manual provides information for ground water systems that must apply treatment techniques as a result of uncorrected significant deficiencies or fecally contaminated source water. The guidance includes technical information on selecting appropriate disinfection technologies to enable primacy agencies and PWSs to select the treatment most appropriate for a given system. It also provides technical information to States and systems on eliminating sources of contamination, utilizing alternate sources and correcting significant deficiencies for situations in which disinfection is not the selected treatment technique.

Sanitary Survey Guidance Manual for Ground Water Systems. For primacy agencies. This guidance provides information to assist States and other primacy programs in conducting sanitary surveys of ground water systems.

GWR Source Water Monitoring Methods Guidance Manual (EPA 815-R-07-019). For primacy agencies and laboratories. This manual provides guidance on triggered and assessment source water monitoring issues such as: selection of fecal indicators, sample collection and shipping, source water monitoring methods, laboratory quality assurance (QA) and quality control (QC), and evaluation of fecal indicator data. This manual also provides an overview of GWR requirements and includes frequently asked questions regarding source water monitoring.

GWR Source Assessment Guidance Manual. For primacy agencies. This manual provides information on procedures for identifying sensitive aquifers. Other risk factors are discussed with emphasis on identifying readily available factors suitable for office, rather than field determination, of risk at an individual PWS well. The guidance also lists sources of information for making determinations and includes field methods for determining the presence of a hydrogeologic barrier. EPA's recommended source water assessment monitoring is included.

Appendix C: SDWA Primacy Agencies and Tribal Contacts

Safe Drinking Water Act Primacy Agency Contacts

For additional information or to learn more about the laws in your own State, please contact your State Primacy Agency.

EPA REGION 1	**www.epa.gov/region1/eco/drinkwater/index.html**	**(617) 918-1584**
Connecticut Department of Public Health: Drinking Water Division	www.dph.state.ct.us/BRS/water/dwd.htm	(860) 509-7333
Maine Maine Department of Human Services: Drinking Water Program	www.state.me.us/dhs/eng/water/index.htm	(207) 287-2070
Massachusetts Department of Environmental Protection: Drinking Water Program	www.mass.gov/dep/water/drinking.htm	(617) 292-5770
New Hampshire Department of Environmental Services: Water Division	www.des.nh.gov/dwgb/	(603) 271-2513
Rhode Island Department of Health: Office of Drinking Water Quality	www.health.ri.gov/environment/dwq/index.php	(401) 222-6867
Vermont Vermont Agency of Natural Resources	www.anr.state.vt.us/dec/watersup/wsd.htm	(802) 241-3400
EPA REGION 2	**www.epa.gov/region02/water/drinkingwater/**	**(212) 637-3879**
New Jersey Department of Environmental Protection: Water Supply Administration	www.state.nj.us/dep/watersupply/	(609) 292-5550
New York Department of Health: Bureau of Water Supply Protection	www.health.state.ny.us/environmental/water/drinking/	(518) 402-7650

Puerto Rico Department of Health: Public Water Supply Supervision Program	www.epa.gov/region02/cepd/prlink.htm	(787) 977-5870
Virgin Islands Department of Planning & Natural Resources: Division of Environmental Protection	www.dpnr.gov.vi/dep/home.htm	(340) 773-1082
EPA REGION 3	**www.epa.gov/reg3wapd/**	**(215) 814-2300**
Delaware Delaware Health & Social Services: Division of Public Health	www.dhss.delaware.gov/dhss/dph/hsp/odw.html	(302) 744-4700
District of Columbia US EPA Region 3 Drinking Water Branch	www.epa.gov/reg3wapd/drinkingwater/	(215) 814-5806
Maryland Department of the Environment: Public Drinking Water Program	www.mde.state.md.us/programs/WaterPrograms/Water_Supply/index.asp	(410) 537-3000
Pennsylvania Department of Environmental Protection: Office of Water Management	www.depweb.state.pa.us/watersupply/cwp/	(717) 772-4018
Virginia Department of Health: Office of Drinking Water	www.vdh.state.va.us/DrinkingWater/	(804) 864-7500
West Virginia Bureau for Public Health: Department of Health and Human Resources	www.wvdhhr.org/oehs/eed/	(304) 558-6715
EPA REGION 4	**www.epa.gov/region4/water/**	**(404) 562-9345**
Alabama Department of Environmental Management: Water Supply Branch	www.adem.state.al.us/WaterDivision/Drinking/DWMainInfo.htm	(334) 271-7773
Florida Department of Environmental Protection: Drinking Water Program	www.dep.state.fl.us/water/drinkingwater/index.htm	(850) 245-8335
Georgia Department of Natural Resources: Water Resources Branch	www.gaepd.org	(404) 657-5947

Kentucky Department for Environmental Protection: Division of Water	www.water.ky.gov/dw	(502) 564-3410
Mississippi Department of Health: Division of Water Supply	www.msdh.state.ms.us/msdhsite/index.cfm/44.0.76.html	(601) 576-7518
North Carolina Department of Environment and Natural Resources: Public Water Supply Section	www.deh.enr.state.nc.us/pws/	(919) 733-2321
South Carolina Department of Health & Environmental Control: Drinking Water Program	www.scdhec.net/environment/water/dwater.htm	(803) 898-4300
Tennessee Department of Environment & Conservation: Division of Water Supply	www.state.tn.us/environment/dws/	(615) 532-0191
EPA REGION 5	**www.epa.gov/r5water/**	**(312) 886-4239**
Illinois Environmental Protection Agency: Division of Public Water Supplies	www.epa.state.il.us/water/index-pws.html	(217) 785-8653
Indiana Department of Environmental Management: Drinking Water Branch	www.in.gov/idem/	(317) 232-8603
Michigan Department of Environmental Quality: Water Bureau	www.michigan.gov/deq	(517) 373-7917
Minnesota Department of Health: Drinking Water Protection Section	www.health.state.mn.us/divs/eh/water/index.html	(651) 201-4700
Ohio Environmental Protection Agency: Division of Drinking & Ground Water	www.epa.state.oh.us/ddagw/	(614) 644-2752

Wisconsin Department of Natural Resources: Drinking Water and Ground Water	www.dnr.state.wi.us/org/water/dwg/	(608) 266-6669
EPA REGION 6	**www.epa.gov/region6/water**	**(214) 665-2757**
Arkansas Department of Health: Division of Engineering	www.healthyarkansas.com/eng/index.html	(501) 661-2623
Louisiana Office of Public Health: Safe Drinking Water Program	www.oph.dhh.louisiana.gov/engineerservice/safewater	(225) 342-7499
New Mexico Environment Department: Drinking Water Bureau	www.nmenv.state.nm.us/dwb/dwbtop.html	(505) 827-1400
Oklahoma Department of Environmental Quality: Water Quality Division	www.deq.state.ok.us/WQDnew/index.htm	(405) 702-8100
Texas Texas Commission on Environmental Quality	www.tceq.state.tx.us/nav/util_water/	(512) 239-4691
EPA REGION 7	**www.epa.gov/region7/water/dwgw.htm**	**(913) 551-7030**
Iowa Department of Natural Resources: Water Supply Program	www.iowadnr.com/water/drinking/index.html	(515) 725-0275
Kansas Department of Environmental Protection: Bureau of Water	www.kdhe.state.ks.us/pws/	(785) 296-5503
Missouri Department of Natural Resources: Water Protection and Soil Conservation Division	www.dnr.mo.gov/env/wpp	(573) 751-1300
Nebraska Department of HHS: Public Water Supply Program	www.hhs.state.ne.us/enh/pwsindex.htm	(402) 471-0521

EPA REGION 8	www.epa.gov/region08/water/	(303) 312-7021
Colorado Department of Public Health & Environment: Drinking Water Program	www.cdphe.state.co.us/wq/drinkingwater	(303) 692-3500
Montana Department of Environmental Quality: Public Water Supply Program	www.deq.state.mt.us/wqinfo/PWS/index.asp	(406) 444-4071
North Dakota Department of Health: Division of Water Quality	www.health.state.nd.us/wq	(701) 328-5210
South Dakota Department of Environment & Natural Resources: Drinking Water Program	www.state.sd.us/denr/des/drinking/dwprg.htm	(605) 773-3754
Utah Department of Environmental Quality: Division of Drinking Water	www.drinkingwater.utah.gov	(801) 536-4200
Wyoming EPA Region VIII: Wyoming Drinking Water Program	www.epa.gov/region08/water/dwhome/wycon/wycon.html	(307) 777-7072
EPA REGION 9	**www.epa.gov/region9/water/index.html**	**(415) 744-1884**
American Samoa Environmental Protection Agency	www.epa.gov/safewater/dwinfo/samoa.htm	(684) 633-2304
Arizona Department of Environmental Quality: Safe Drinking Water Section	www.azdeq.gov/environ/water/dw/index.html	(602) 771-2300
California Department of Health Services: Division of Drinking Water & Environmental Management	www.dhs.ca.gov/ps/ddwem/dwp/default.htm	(916) 449-5600
Guam Guam Environmental Protection Agency: Water Programs Division	www.guamepa.govguam.net/programs/water	(671) 475-1638

Hawaii Department of Health: Environmental Health Division	www.hawaii.gov/health/environmental/water/sdwb/index.html	(808) 586-4258
Nevada Department of Environmental Services: Safe Drinking Water Program	ndep.nv.gov/bsdw/index.htm	(775) 687-9520
EPA REGION 10	**www.epa.gov/region10/**	**(206) 553-1389**
Alaska Department of Environmental Management: Water Supply Branch	www.state.ak.us/dec/eh/dw	(907) 269-7647
Idaho Department of Environmental Quality: Water Quality Division	www.deq.state.id.us/water/	(208) 373-0194
Oregon Department of Human Services: Drinking Water Program	oregon.gov/DHS/ph/dwp/index.shtml	(971) 673-0405
Washington Department of Environmental Health: Office of Drinking Water	www.doh.wa.gov/ehp/dw/	(360) 236-3100

Tribal Contacts

For additional information or to learn more about the laws governing your tribe, use the contact information provided below.

US EPA Headquarters	**Web site**	**Phone Number**
American Indian Environmental Office	www.epa.gov/indian	(202) 564-0303
US EPA Regional Tribal Capacity Development Coordinators	**Web site**	**Phone Numbers**
EPA Region 1	www.epa.gov/region01/govt/tribes/	(888) 372-7341
EPA Region 2	www.epa.gov/region02/nations/index.html	(212) 637-3600
EPA Region 4	www.epa.gov/region04/indian/index.htm	(404) 562-9434
EPA Region 5	www.epa.gov/region5/water/stpb	(312) 353-2123
EPA Region 6	www.epa.gov/earth1r6/6dra/oejta/tribalaffairs/	(800) 887-6063
EPA Region 7	www.epa.gov/region07/government_tribal/index.htm	(913) 551-7030
EPA Region 8	www.epa.gov/region08/tribes	(303) 312-6116
EPA Region 9	www.epa.gov/region09/cross_pr/indian/index.html	(415) 972-3564
EPA Region 10	yosemite.epa.gov/r10/tribal.NSF/	(206) 553-4011
Other Contacts	**Web site**	**Phone Numbers**
Administration for Native Americans	www.acf.dhhs.gov/programs/ana	(877) 922-9262
Bureau of Indian Affairs	www.doi.gov/bureau-indian-affairs.html	(202) 208-3710
Indian Health Service	www.ihs.gov	(301) 443-3024
Native American Water Association	www.nawainc.org	(775) 782-6636

Appendix D: Other STEP Documents Available from EPA

This guide is one in a series of Simple Tools for Effective Performance (STEP) documents for small drinking water systems. The currently available STEP documents can be obtained from EPA by calling the Safe Drinking Water Hotline at (800) 426-4791 and requesting the document by its publication number. To check on the availability of STEP documents listed below as under development, go to www.epa.gov/safewater/smallsys/ssinfo.htm.

AVAILABLE NOW

Small Systems Guide to the Total Coliform Rule (TCR)
Publication number: EPA 816-R-01-017A
Published: June 2001

Complying with the Revised Drinking Water Standard for Arsenic
Publication number: EPA 816-R-02-008A
Published: August 2002

Complying with the Stage 2 Disinfectants and Disinfection Byproducts Rule: Small Entity Compliance Guide
Publication number: EPA 815-R-07-014
Published: February 2007

Complying with the Long Term 2 Enhanced Surface Water Treatment Rule: Small Entity Compliance Guide
Publication number: EPA 815-R-07-015
Published: February 2007

Small Systems Guide to Safe Drinking Water Regulations
Publication number: EPA 816-R-03-017
Published: September 2003

Strategic Planning: A Handbook for Small Water Systems
Publication number: EPA 816-R-02-015
Published: September 2003

Asset Management: A Handbook for Small Water Systems
Publication number: EPA 816-R-03-016
Published: September 2003

Source of Technical and Financial Assistance
Publication number: EPA 816-K-02-005
Published: July 2002

Complying with Stage 1 Disinfectants and Disinfection Byproducts Rule: Basic Guide
Publication number: EPA 816-B-05-004
Published: March 2006
- Supplement A
  Publication number: EPA 816-B-05-005
- Supplement B
  Publication number: EPA 816-B-05-006

Setting Small Drinking Water System Rates for a Sustainable Future
Publication Number: EPA 816-R-05-006
Published: January 2006

UNDER DEVELOPMENT

Restructuring: A Handbook for Small Water Systems

Appendix E: Determining If a Disinfection System Provides 4-log Inactivation of Viruses

The purpose of this appendix is to provide information for ground water systems that currently, or are planning to, provide chemical disinfection for their ground water supplies.

- If you are providing treatment, including disinfection, of your ground water sources in your system and the State determines that the treatment is capable of providing 4-log inactivation and/or removal of viruses and you do not conduct triggered source water monitoring after a TC-positive sample, you must meet the treatment/disinfection and compliance monitoring requirements of the GWR (§141.403).

- If your treatment system does not provide 4-log (99.99%) inactivation and/or removal of viruses, as determined by the State, you must meet the triggered monitoring requirements if you have a TC-positive sample (§141.402).

> The GWR does not require disinfection or 4-log inactivation of viruses for all ground water systems. Only those systems with significant deficiencies or documented fecal contamination are required to provide corrective actions and one option for corrective action is to provide 4-log virus inactivation through disinfection.

Inactivation of Pathogens

- Inactivation of pathogens using a chemical disinfectant (chorine, chloramine, ozone) is based on the CT concept where C is the measured concentration of the chemical disinfectant residual and T is the contact time between the point of application of the disinfectant and the point where the disinfectant residual is measured. The point where the residual is measured must be before or at the first service connection or customer (§141.403(b)).

- Once C is measured and T is determined from the flow and the size of the system components, the product C x T (CT) is compared to EPA or State information of the CT needed for the inactivation, through disinfection, of a pathogen. EPA has produced tables of CT values and your State may have information it uses for this purpose.

How does the CT concept apply to ground water systems?

- For the GWR, if a chemical disinfection system can achieve a CT at least equal to the CT needed for 4-log inactivation of viruses for the disinfectant being used, the system is not required to meet the triggered monitoring requirements of the rule. However, such a system would have to comply with the treatment and compliance monitoring requirements of the GWR and any additional requirements set by the State.

- C, the concentration of the disinfectant, is measured at or before the first customer receiving water or the first connection providing water to the public from the system. For a system using chlorine or chloramine, the residual concentration can be measured with a portable kit or with a continuous monitor using an EPA approved measurement method. A list of EPA approved methods can be found on-line at www.epa.gov/waterscience/methods or from the US EPA Water Resource Center at (202) 566-1729 (see mail address in Appendix B). Your State may have a list of approved measurement methods as well.

- T, the contact time of the disinfectant, is based on system components. T, in minutes, is determined by dividing the capacity of the system component part (pipe, storage tank), in gallons, by the flow, in gallons per minute (gpm), of the system.

How do you determine whether a ground water system is providing 4-log inactivation for the GWR?

The following examples illustrate how T is determined and how CT is calculated for a particular system. The Guidance Manual for Conducting Sanitary Surveys of Public Water Systems; Surface Water and Ground Water Under the Direct Influence (GWUDI)l (EPA 815-R-99-016), available on-line at www.epa.gov/safewater/mdbp/pdf/sansurv/sansurv.pdf or by contacting US EPA Water Resource Center at (202) 566-1729 (see mail address in Appendix B), provides additional information on determining T for a system component.

The following information is needed to determine if a chemical disinfection system is providing 4-log inactivation for the purposes of the GWR :

1. C, the measured disinfectant residual at or before the first customer or connection serving the public. It is measured in mg/l or in ppm.
2. Length (in feet) of each pipe between the point where disinfectant is applied and the point where it is measured.
3. Size (diameter) of each pipe between the point where disinfectant is applied and the point where it is measured. The diameter in inches must be converted to diameter in feet (1 inch = 1/12 foot).
4. Volume of water (in gallons) in any storage tanks used to determine CT provided by the system.

5. Maximum daily flow, in gallons per minute, (gpm) of the system. This could be as measured by a flow meter, the maximum capacity of the well pump, or another measurement acceptable to the State.

The following example illustrates how this information may be used to calculate CT and to determine if a chemical disinfection system is providing 4-log inactivation of viruses.

Example

The Redwood Road water system serves 4 commercial businesses and a service station. (See Figure E.1). The water supply is provided by a single well on the property that is operated by a pressure activated switch. The information supplied with the well pump that was purchased for the system says it has a capacity of 5 gpm. A hypochlorite solution is injected using a drum of prepared solution and an injection pump inside the well house. The operator wants to determine how much virus inactivation the disinfection system provides.

To determine the inactivation the system provides through disinfection, the operator needs to calculate the CT achieved by the hypochlorination system.

- The operator must determine T, the contact time, from the size of the system's components and measure C, the disinfectant residual concentration, at or before the first service connection.

- The operator knows the well pump has a capacity of 5 gallons per minute (gpm) from the manufacturer's information. This is the maximum flow through the water system. T, the contact time in the system is the volume (in gallons) of the system divided by the maximum flow.

- The operator knows there is 100 feet of 2 inch pipe between the well house and the first service connection, the service station. To obtain the volume in gallons of the pipe, first find the volume in cubic feet.

The diameter of the pipe is 2 inch or 2/12 feet
The area of the pipe is [π x (diameter^2)] ÷ 4 and π = 3.14, or the area of the pipe is also 0.785 x diameter^2

So the area of the pipe is 0.785 x [(2/12 feet)^2] = 0.022 sq.ft.
And the volume of pipe in cubic feet = 100 feet x (0.022 sq.ft) = 2.2 cubic feet
The volume of the pipe in gallons is 2.2 cubic feet x 7.48 gallons/cubic foot = 16.4 gallons

The contact time T in the pipe is the volume divided by the flow
T = 16.4 gallons ÷ 5 gpm = 3.3 minutes

- The operator measures the chlorine residual at the service station and finds it to be 0.5 mg/l

- So, the CT provided by the system is 0.5 mg/ l x 3.3 minutes = 1.6 mg/l-minutes.

- The CT needed for 4-log inactivation is provided in Table E.1. The operator has measured the temperature of the water as 10°C and the last chemical analysis done for the well found a pH of 7.4 for the well water.

- Looking in Table E.1 the CT for that temperature and pH for 4-log inactivation with chlorine disinfection is 6 mg/l-minutes.

- To provide 4-log inactivation, the CT provided by the system must be equal to or greater than the CT required from Table E.1 (or the ratio of CT required/CT achieved must be 1.0 or more).

Since the CT provided by the system, 1.6 mg/l-minutes, is less that the CT required from Table E.1 (6 mg/l-minutes), the system does not provide enough CT to achieve 4-log inactivation. If the system was required to provide 4-log inactivation or wished to provide it to avoid triggered monitoring, the CT provided by the system would need to be greater.

Figure E.1 – Redwood Road Water System

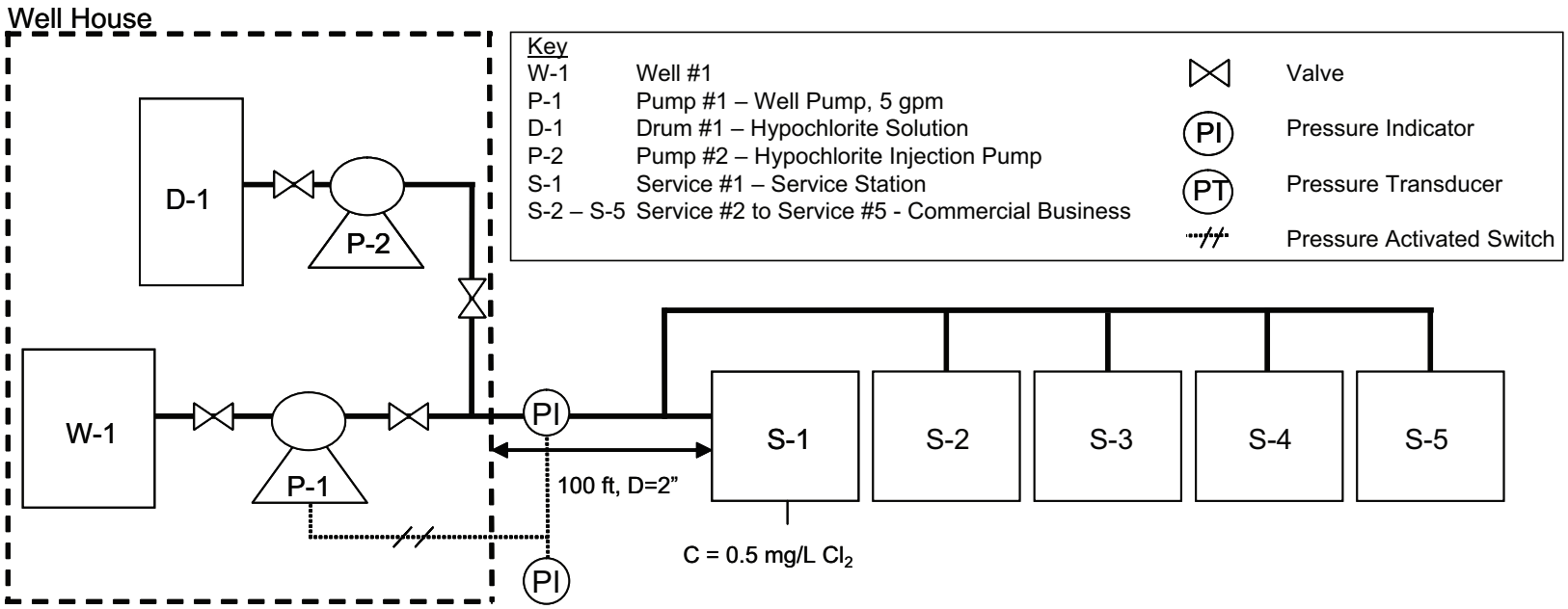

Note: Figures not drawn to scale

The GWR does not require disinfection or 4-log inactivation of viruses for all ground water systems. Only those systems with significant deficiencies or documented fecal contamination are required to provide corrective actions and one option for corrective action is to provide 4-log virus inactivation through disinfection

Table E-1
CT Values for a 4 -log Inactivation of Viruses by Free Chlorine [1,2]

	CT for a 4- log Inactivation of Viruses (mg/L-minutes)	
Temperature o C	**pH =6-9**	**pH=10**
0.5	12	90
5	8	60
10	6	45
15	4	30
20	3	22
25	2	15

[1] Adapted from Table E-7, Appendix E, Guidance Manual for Compliance with the Filtration and Disinfection Requirements for Public Water Systems Using Surface Water Sources, USEPA, 1990.
[2] Basis for values given in Appendix F, Guidance Manual for Compliance with the Filtration and Disinfection Requirements for Public Water Systems Using Surface Water Sources, USEPA, 1990.

Appendix F: Example-Systems with More than One Ground Water Source

The Burlwood Park water system serves 1,200 people. The water supply is provided by three wells. The North Well and the South Well are operated all year. The Sunset Well is operated from May through September to meet higher demands. The Sunset Well pumps into the Sunset Tank and the Sunset Tank serves the upper pressure zone of the Burlwood Park water system.

The GWR requires systems with more than one ground water source that do not provide 4-log treatment of viruses for all of their ground water sources to collect a triggered source water sample from each source after a TC-positive sample. The Burlwood Park system would need to collect two source water samples after a TC-positive in the months of October through April (North Well and South Well operating) and three source water samples after a TC-positive in the months of May through September (North, South and Sunset Wells all operating). However, if the system has a State-approved trigged monitoring plan, it can reduce the number of samples it needs to collect after a TC-positive.

Burlwood Park collects 4 TCR samples per month according to a State-approved TCR sample siting plan (See Figure F-1). The GWR triggered monitoring sample plan, Table F-1, identifies which source will be sampled for a fecal indicator for each TCR sample site and for the different seasonal source use. The sample plan allows Burlwood Park to reduce the number of source water samples collected and analyzed. If Burlwood Park can demonstrate to the State that source sample collected from either the North or South Well is representative of the water quality in both the North and South Wells, the number of triggered source water sample required after a TC-positive sample could be reduced even further. Information needed to show that the North or South well is representative of both wells would include well logs and drillers reports, water quality data, and geologic and hydrogeologic maps and information.

Figure F.1 – Burlwood Park System

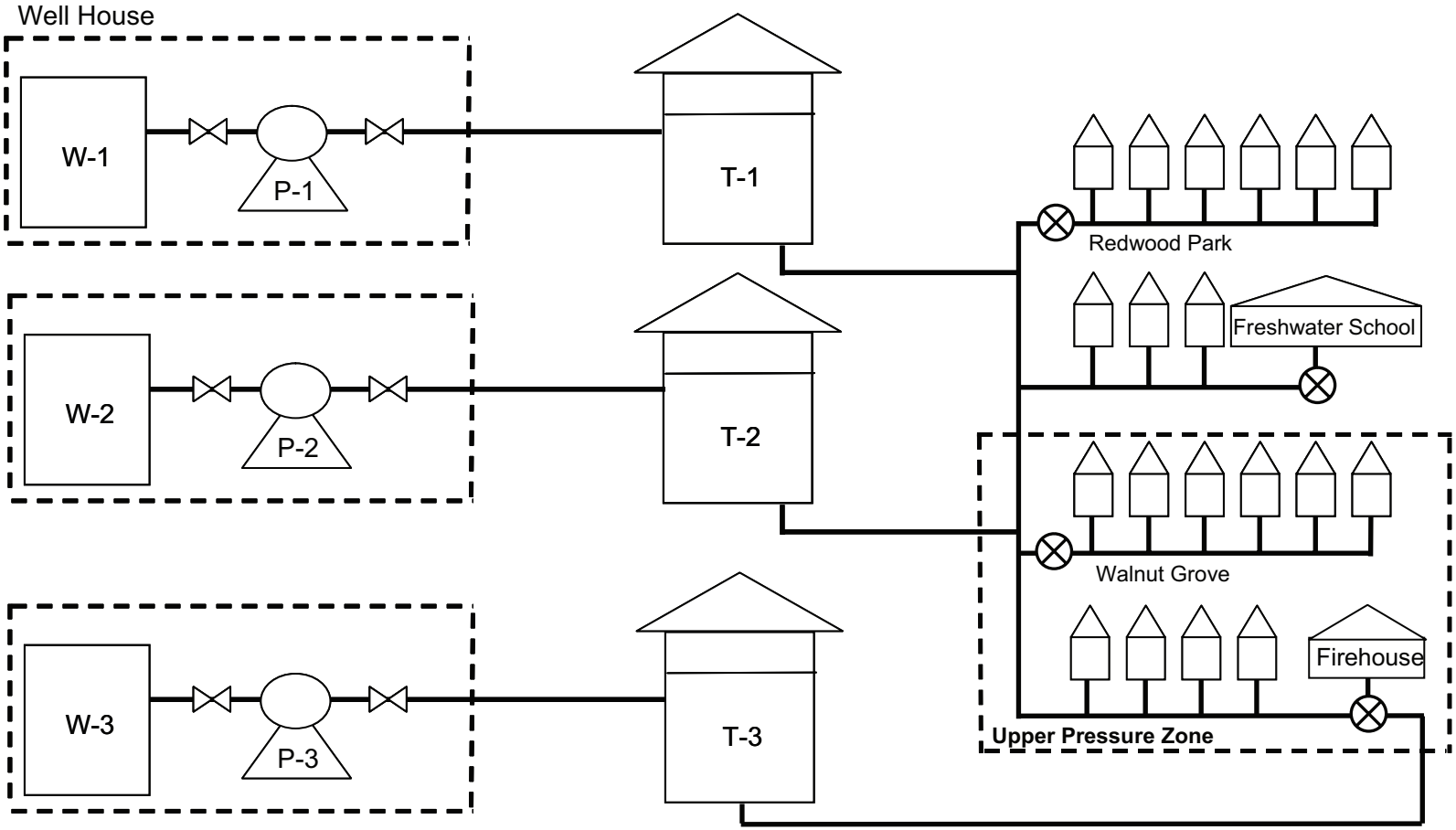

Key			
W-1	Well #1 – North Well	T-1	Tank #1 – North Well Storage Tank
W-2	Well #2 – South Well	T-2	Tank #2 – South Well Storage Tank
W-3	Well #3 – Sunset Well	T-3	Tank #3 – Sunset Well Storage Tank
P-1	Pump #1 – North Well Pump	⊗	TCR Sample Site
P-2	Pump #2 – South Well Pump	⋈	Valve
P-3	Pump #3 – Sunset Well Pump		

Note: Figures not drawn to scale

Table F-1
Burlwood PWS Triggered Monitoring Plan

TCR Sample Site	GWR Source Sample October – April	GWR Source Sample May – September
Redwood Park	North and South Well	North and South Well
Freshwater School	North and South Well	North and South Well
Walnut Grove Service	North and South Well	Sunset Well
Firehouse	North and South Well	Sunset Well