EPA-600/2-81-212
September 1981

A HAZARDOUS MATERIALS SPILL WARNING SYSTEM

by

Milton Kirsch
Robert Melvold
John Vrolyk

Rockwell International
Newbury Park, California 91320

Contract No. 68-03-2080

Project Officer

Joseph P. LaFornara
Oil & Hazardous Materials Spills Branch
Municipal Environmental Research Laboratory-Ci.
Edison, New Jersey 08817

MUNICIPAL ENVIRONMENTAL RESEARCH LABORATORY
OFFICE OF RESEARCH AND DEVELOPMENT
U.S. ENVIRONMENTAL PROTECTION AGENCY
CINCINNATI, OHIO 45268

DISCLAIMER

This report has been reviewed by the Municipal Environmental Research Laboratory-Cincinnati, U.S. Environmental Protection Agency, and approved for publication. Approval does not signify that the contents necessarily reflect the views and policies of the U.S. Environmental Protection Agency, nor does mention of trade names or commercial products constitute endorsement or recommendation for use.

FOREWORD

The U.S. Environmental Protection Agency was created because of increasing public and government concern about the dangers of pollution to the health and welfare of the American people. Noxious air, foul water, and spoiled land are tragic testimonies to the deterioration of our natural environment. The complexity of that environment and the interplay of its components require a concentrated and integrated attack on the problem.

Research and development is that necessary first step in problem solution; it involves defining the problem, measuring its impact, and searching for solutions. The Municipal Environmental Research Laboratory develops new and improved technology and systems to prevent, treat, and manage wastewater and solid and hazardous waste pollutant discharges from municipal and community sources, to preserve and treat public drinking water supplies, and to minimize the adverse economic, social, health, and aesthetic effects of pollution. This publication is one of the products of that research and provides a most vital communications link between the researcher and the user community.

One of the requirements to control pollution of our waterways by hazardous materials is a device to detect their presence. The program reported herein was designed to fulfill this need and is part of a continuing program of the Oil and Hazardous Materials Spills Branch, MERL-Ci, to detect and mitigate pollution from hazardous material spills.

Francis T. Mayo, Director
Municipal Environmental Research
Laboratory

ABSTRACT

The Environmental Protection Agency has developed a list of materials defined as hazardous substances based on their aquatic toxicity. In addition, certain materials have been designated as "priority pollutants." Often, a spill of toxic materials into a moving water stream can occur without the spiller being aware, or without the spiller notifying authorities. Accordingly, a system was needed to detect the presence of hazardous toxic materials in streams and rivers. This need has been filled by providing a spill alarm system, which was designed, fabricated, and tested prior to delivery. It consists of nonselective detection components which together serve to detect all the materials on the designated hazardous materials list, and the priority pollutants. The system was mounted in an automotive trailer and delivered to the Oil and Hazardous Materials Spills Branch in Edison, New Jersey.

This report was submitted in fulfillment of Contract 68-03-2080 by Rockwell International under the sponsorship of the U.S. Environmental Protection Agency. This report covers the period from June 28, 1974, to December 1, 1978. Rockwell work was completed as of October 1, 1977.

CONTENTS

Foreword iii
Abstract iv
Figures vi
Tables vii
List of Abbreviations and Symbols viii

1. Introduction and Summary 1
   Background 1
   Summary 2

2. Conclusions and Recommendations 6
   Conclusions 6
   Recommendations 6

3. Operation of the Hazardous Materials Spill Warning System 8
   Overview 8
   Detail 9

4. System Testing 28
   Laboratory Evaluation of Individual Detection Components. . 28
   Laboratory Evaluation of Integrated System 34
   Trailer Mounting 41
   Field Testing of the Hazardous Material
      Spill Warning System at the Rocketdyne
      Santa Susana Field Laboratory 41
   Field Testing on the Los Angeles River 45

References 47
Appendices

A. Instrument Manufacturers 48
B. Operating Instructions 51
C. Spill Alarm System Interim Report, Environmental Emergency
   Response Unit 57

FIGURES

Number		Page
1	Hazardous Material Spill Warning System, block diagram	8
2	Hazardous Material Spill Warning System, pictorial view	10
3	Hazardous Material Spill Warning System	11
4	Warning system flow diagram showing nominal flowrates	12
5	Rotary injection valve Model DC-60 TOCA	15
6	Alarm control system, schematic	17
7	Alarm control system, pictorial view	18
8	Relation between total dissolved solids and electrical conductivity	22
9	UV absorptimeter rezero fluid control system	25

TABLES

Number		Page
1	Characteristics of Prosser Pumps for Water Quality Monitoring	13
2	Hazardous Materials Detectable at the 0.1 ppm Level Above Buffer Capacity by Measurement of pH	20
3	Hazardous Materials Detectable by Oxidation-Reduction Potential	21
4	Specific Conductivity of Some Hazardous Materials in Water	22
5	Hazardous Materials that are Electrically Conducting in Aqueous Solution	23
6	Hazardous Materials Detectable by Ultraviolet Absorption	26
7	Sensitivity of Ultraviolet Absorption Sensor for Some Hazardous Materials	29
8	Carbon Contents of Aqueous Solutions of Selected Organic Compounds as Measured by the Dohrmann DC-60 Carbon Analyzer	32
9	Effect of Some Inorganic Compounds on pH, ORP, Conductivity and UV Absorption	35
10	Response of the Warning System to the Presence of Some Organic and Metal-Organic Compounds	39
11	Change in Response Due to Stream Spills of Hazardous Materials	44

LIST OF ABBREVIATIONS AND SYMBOLS

amps	-- amperes
C	-- carbon
°C	-- degrees Centigrade
cc	-- cubic centimeters
C/L	-- carbon per liter
cm	-- centimeters
CO_2	-- carbon dioxide
cps	-- cycles per second
EDTA	-- ethylenediamine tetraacetic acid
EERU	-- Environmental Emergency Response Unit
FS	-- full scale
g	-- gram
gph	-- gallons per hour
gpm	-- gallons per minute
HAHC	-- hydroxylamine hydrochloride
HCl	-- hydrochloric acid
ir	-- infrared
KCl	-- potassium chloride
KHP	-- potassium acid phthalate
L	-- liter
M	-- molar (moles per liter)
m	-- meter
mg	-- milligrams
ml	-- milliliter
mm	-- millimeter
mmho/cm	-- millimhos per centimeter
mV	-- millivolt
µm	-- micrometer
µmho	-- micromho
N	-- normal (equivalents per liter)
N_2	-- nitrogen
NaOH	-- Sodium hydroxide
nm	-- nanometers
ORP	-- oxidation-reduction potential
ppm	-- parts per million
psig	-- pounds per square inch gauge
PVC	-- polyvinylchloride
TC	-- total carbon
TOC	-- total organic carbon
TOCA	-- total organic carbon analyzer
uv	-- ultraviolet
VDC	-- volts, direct current

SECTION 1

INTRODUCTION AND SUMMARY

BACKGROUND

The legislative base upon which the development reported herein rests is the Federal Water Pollution Control Act Amendments of 1972, Public Law 92-500. In consecutive paragraphs of Section 311 of the law, it is stated that:

> "(b)(1) The Congress hereby declares that it is the policy of the United States that there should be no discharges of oil or hazardous substances into or upon the navigable waters of the United States, adjoining shorelines, or into or upon the waters of the contiguous zone."
>
> "(2)(A) The Administrator (of the Environmental Protection Agency) shall develop, promulgate, and revise as may be appropriate, regulations designating as hazardous substances, other than oil as defined in this section, such elements and components which, when discharged in any quantity into or upon the navigable waters of the United States or adjoining shorelines or the waters of the contiguous zone, present an imminent and substantial danger to the public health or welfare, including, but not limited to, fish, shellfish, wildlife, shorelines, and beaches."

Under this authority the Environmental Protection Agency concurrently began the process of designating 271 materials as hazardous, and this program to develop a warning system to detect spills of hazardous materials in natural waterways. The advance notice of this intent to designate hazardous materials was published in the August 22, 1974 issue of the Federal Register, and the proposed rules appeared in the December 30, 1975 issue with some modifications, and inclusion of harmful quantities and penalty rates. Final notice of the rules was published March 13, 1978, and amendments to the Clean Water Act of 1977 changing enforcement for chemical spills were passed on October 14, 1978. This was followed on February 16, 1979, with a series of amendments to the final rules and the designation of 28 additional hazardous materials (40CFR116). In June 1978, a court settlement involving the EPA and certain concerned plaintiffs required the EPA to identify those materials which were considered toxic. This is the "EPA Consent Decree" and as a result EPA identified 65 toxic chemicals, which formed the Toxic Pollutant List; this list was eventually expanded to 129; these chemicals are commonly referred to as Priority Pollutants, based upon frequency of occurrence in worldwide water analysis (1).

The Federal program to combat spills is dominated by three goals:

1. To prevent spills.

2. To detect spills.

3. To contain, remove, and clean up spills.

The spill alarm system was designed to advance the state of the art in detecting that a spill has occurred. Quick notification is essential to mitigating the spill effects.

The detailed list of materials designated as hazardous has undergone some changes since the initiation of the program, but such changes were expected. Detection components were therefore chosen from among nonselective candidates, each of which could respond to many materials on the list. The rationale underlying this approach was that it was more important to detect all spills of hazardous materials than to avoid false alarms caused by spills of nonhazardous materials to which the detection components would also respond. It was recognized at the outset that the sensitivity for some of the most toxic hazardous substances could be less than desirable, but this limitation was accepted as necessary to build a system from commercially available major components.

SUMMARY

A hazardous material spill warning system has been designed, fabricated, and tested. It meets the following criteria laid down when the program was started in July 1974.

1. Detection components, where possible, shall be off-the-shelf items ready for use with a minimum of modifications.

2. Detection components shall be "rugged" enough for use in an untended remote station and capable of functioning around the clock.

3. The final package shall contain components which are resistant to fouling, scaling, etc., to a degree where cleaning is necessary only once every 14 days or longer.

4. Detection components shall produce an electrical response which can be transmitted by wire or radio to a distant receiver.

5. Detection components shall remain sensitive under adverse conditions such as high flow or rapid current in a watercourse.

6. Detection components shall be capable of distinguishing between a slug of a given hazardous material(s) and concentration levels of the substances normally present in a watercourse.

7. Detection components shall not degrade any of the beneficial uses of a watercourse.

8. The final package, consisting of one or more detection components, shall be capable of sensing both organic and inorganic hazardous materials. The final package need not contain components which selectively detect the presence of each substance on the list. Rather, several detectors capable of sensing wide classes of these substances would be desirable both in terms of low initial cost and of ease of maintenance. The detectors, as stated previously, must be capable of distinguishing a slug of a hazardous substance from the materials normally present in fresh, brackish, or saline waters.

The entire instrument package is housed in an air-conditioned, 8.2-m (27-foot) automotive trailer. The warning system can, therefore, be moved conveniently from one site to another. A submersible pump in the waterway feeds the instrument package through 5-cm- (2-inch)-diameter plastic hose. The only materials added to the natural water as it passes through the trailer are small quantities of hydrochloric acid (200 ml [7 fluid ounces] of 0.5 N acid per day) as part of the determination of total organic carbon content, and a minute quantity of a biocide to reduce proliferation of bacteria and algae in a reservoir of rezero fluid.

Total water flow is about 38 L (10 gallons) per minute. Quantities of materials added are too small to affect any of the desirable uses of the water.

The detection components that have been incorporated into the integrated system are:

1. pH probe - Leeds & Northrup.

2. Oxidation-reduction potential, ORP sensor - Leeds & Northrup.

3. Electrical conductivity sensor - Leeds & Northrup.

4. Ultraviolet absorptimeter - Teledyne.

5. Total Organic Carbon Analyzer, TOCA - Dohrmann.

The strip chart recorder channel for each detection component has a built-in alarm circuit, the response level of which can be preset so that an electrical signal is transmitted when the level is exceeded. (The pH and ORP circuits have a settable alarm level below a certain limit as well as above an upper limit to the "normal" range.) When an alarm condition is reached, the following events occur:

1. A signal light on the control panel indicates which detection component produced the alarm.

2. A solenoid valve is opened for a selected time to permit collection of a 3.8-L (1-gallon) grab sample of the water for later chemical analysis.

3. A telephone dialer is actuated and transmits a prerecorded message to any chosen telephone station. The dedicated telephone receiver in use

has been outfitted with an automatic telephone answerer so that the prerecorded alarm message is recorded at the receiving station.

4. The recorder chart speeds (for all but the TOC analyzer) are increased from the normal 1.3 cm (0.5 inch) per hour to 15 cm (6 inches) per hour to show more detail. After the spilled material has passed completely through the detection components, the alarm lights are automatically turned off and after a preset time, a second relay is energized to prepare to collect a second grab sample when a second spill occurs unless the TOCA was alarmed by the first spill. After a second spill alarm, the telephone dialer sends a second prerecorded message.

Sufficient stability of the ORP, pH, and electrical conductivity detection components for a two-week period unattended operation has been available in a number of commercial instruments for some time. Stability of the ultraviolet analyzer stems from a combination of an automatic electronic rezero circuit and provision for simultaneous flushing of the sample cell with fluid to maintain a constant baseline. The total organic carbon analyzer is also equipped with an automatic rezero circuit which allows adequate zero drift control over the two-week period of unattended operation.

The integrated warning system was first tested in the laboratory. Water was recirculated from a 208-L (55-gallon) drum. Tests of individual hazardous materials were made by addition of known quantities to water in the drum to determine sensitivity levels. When no hazardous materials were added, the system ran continuously for two weeks without attention.

The entire system, mounted in the automotive trailer, was successfully moved to the Rockwell Santa Susana Field Laboratory (SSFL), where a simulated natural waterway was available for further testing the warning system. The simulated waterway is part of a wastewater control system within which are several ponds where effluents from rocket firings and other operations can be held for cleanup before discharge to the Ventura County sewage system. At low flowrates, the simulated waterway is a possible carrier for added hazardous materials which can be transported by the submersible pump to the warning system. Occasionally, as when rocket fuel tanks are purged or cleaned, the waterway carries high concentrations of organic compounds. Under both circumstances the warning system was tested at SSFL, and it responded both to hazardous materials placed in the waterway specifically for testing it, and to foreign material introduced by other operations without necessarily prior notification of the warning system personnel.

A test at the Los Angeles River was conducted successfully. Passage of a uv-absorbing material was detected, indicating introduction of some foreign substance upstream.

A field test by Mason & Hanger, the Environmental Emergency Response Unit contractor, showed that unattended operation of two weeks was not achieved. The alarms received from the system were of a continuous nature and distinction between equipment failure, zero drift, and actual spill was not possible. The results are partially attributed to the parameters of the groundwater runoff

and the soils saturated with various organic and inorganic materials present at the test site.

SECTION 2

CONCLUSIONS AND RECOMMENDATIONS

CONCLUSIONS

The warning system has been shown to be capable of detecting a wide variety of hazardous materials, and of unattended operation for a two-week period. It performed better than expected on a simulated waterway near a rocket engine test site where it was subjected to high vibration levels and extremes in water flowrates. On the Los Angeles River, where it was located 82 m (270 feet) from and 9 m (30 feet) above the stream bed, it detected a highly uv-absorbing material that took more than 40 minutes to pass the sampling point. Its usefulness in detecting spills has therefore been amply demonstrated. Suggestions for further testing and improvements will increase its usefulness and capability.

RECOMMENDATIONS

The warning system should undergo extensive field testing under a wide variety of conditions to clarify what improvements would permit longer periods of unattended operation. Such testing will need to include provision for reducing the possibility of vandalism by displaying warning signs and audible onsite as well as remote alarms in case of tampering. Tests should be conducted on waterways that differ in dissolved solids content, temperatures and frequency of pollution by hazardous materials. The grab sample collected when an alarm is produced should be analyzed qualitatively and quantitatively to determine what material(s) caused the alarm.

Improvements of several types may be made for the next generation of warning systems, and improved techniques for using the present one will increase its usefulness. Judicious placement of the submersible pump may increase the sensitivity of the system to water-insoluble floaters or sinkers. A multichannel telephone dialer may be used to identify in the transmitted message which of the individual sensors triggered the alarm signal. Improved solenoid valves should be installed to reduce the need for servicing.

At present, the TOCA alarm does not reset automatically once the material which produced the alarm is no longer present. The second grab sample circuitry will therefore not be actuated if the first alarm is, in part, the result of high TOC content in the stream. A relay arrangement to reset the TOCA alarm automatically should be installed to overcome this difficulty.

A temporary power failure will not produce any serious problem in the warning system, but it will extinguish the deuterium lamp in the uv analyzer.

Additional circuitry is required to restart the lamp automatically when power is restored. (At present, a spring-loaded switch must be momentarily engaged manually to start the deuterium lamp.)

SECTION 3

OPERATION OF THE HAZARDOUS MATERIALS SPILL WARNING SYSTEM

OVERVIEW

A block diagram (Figure 1) of some of the important components of the warning system shows the relationship among the detectors, the general flow pattern of the water sample, the grab samplers, and the alarm circuitry. A submersible pump (Prosser Model 9-04011) in the watercourse supplies a water sample continuously to the instrument package in the trailer. Most of the water flows through the redox potential (ORP), pH, and conductivity cells and back to the waterway. A small isokinetically split sidestream goes on to the homogenizer and thence to both the differential ultraviolet absorptimeter and

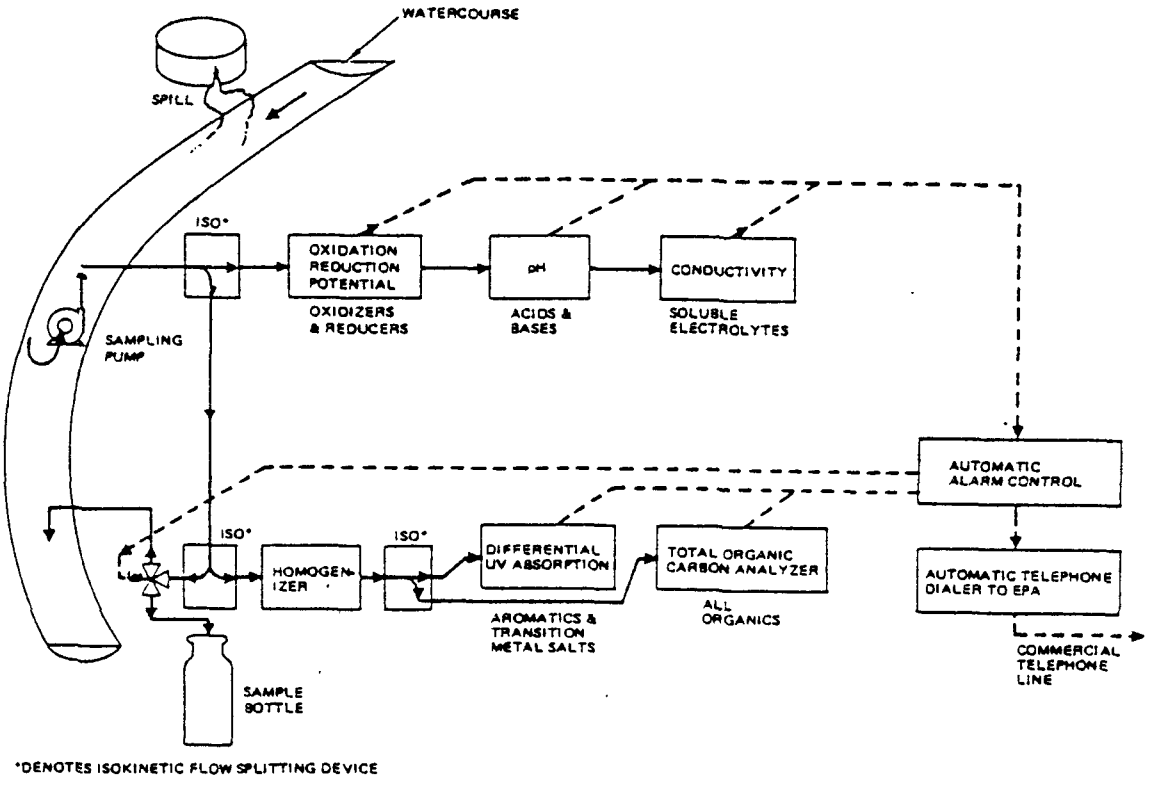

Figure 1. Hazardous Materials Spill Warning System, block diagram.

the total organic carbon analyzer. When an alarm condition is detected by any of the major detection components, a grab sample is collected in the 3.8-L (1-gallon) sample bottle and the telephone dialer sends a prerecorded message to the automatic telephone answerer.

The 8.2-m (27-foot) automotive trailer which houses the instrument package is shown in Figure 2. The system as a whole, depicted in Figure 3, consists of three main consoles. The central unit contains the Teledyne General-Purpose Analyzer, Model 611DS2, across the top. Upon its frame are mounted the Leeds & Northrup pH, ORP, and conductivity cells across the bottom front. At the back of this central unit are housed much of the auxiliary plumbing that integrates the individual major components. The right-hand console is the Dohrmann Model DC-60 Total Organic Carbon Analyzer with its built-in recorder.

To the left is the control console with the two Leeds & Northrup recorders across the top. The left-hand recorder is a three-pen type and also contains the necessary circuits to power the L&N detectors. The blue pen of the right-hand two-channel recorder is connected to the output of the Teledyne analyzer, the differential ultraviolet absorptimeter, and contains a spare channel for some device to be added later. The charts on both these recorders normally run at 1.3 cm (0.5 inch) per hour. When an alarm condition is reached on either recorder, both charts automatically speed up to 15 cm (6 inches) per hour to show more detail.

The panel below the recorders in the control console houses the timer-relays that control the solenoid valves on the grab samplers, the alarm lights, and the connections to the automatic telephone dialer.

The lower panel contains the timer and counter relays to control the flow of fluid to and from the uv rezeroing reservoir and the addition of biocide to it. The counter is actuated every hour by the rezeroing cam on the uv absorption instrument which flips a three-way solenoid valve to the position that allows fluid from the rezero reservoir, instead of sample, to flow through the uv cell. The counter resets to 24 after it reaches zero. At that time a timer-relay is engaged that energizes a solenoid valve to empty the reservoir. A second timer operates a solenoid valve to refill the reservoir with fresh fluid and a third timer controls a valve that permits addition of biocide to the reservoir for a predetermined time. The 1-liter bottle in which the biocide is stored is large enough to contain a two-week supply.

DETAIL

Water Flow

A detailed flow diagram is shown in Figure 4. The main submersible pump, placed in the waterway, and not depicted in the diagram, has manufacturer's performance characteristics listed in Table 1. The pump is surrounded by a coarse cylindrical stainless steel screen filter containing 3-mm (1/8-inch)-diameter holes. Particles smaller than this size can be easily handled by the ORP, pH, and conductivity detectors. The Raytheon homogenizer breaks down particles in this size range to 0.1 mm or less so that they can be handled by the small lines of the uv instrument and TOC analyzer.

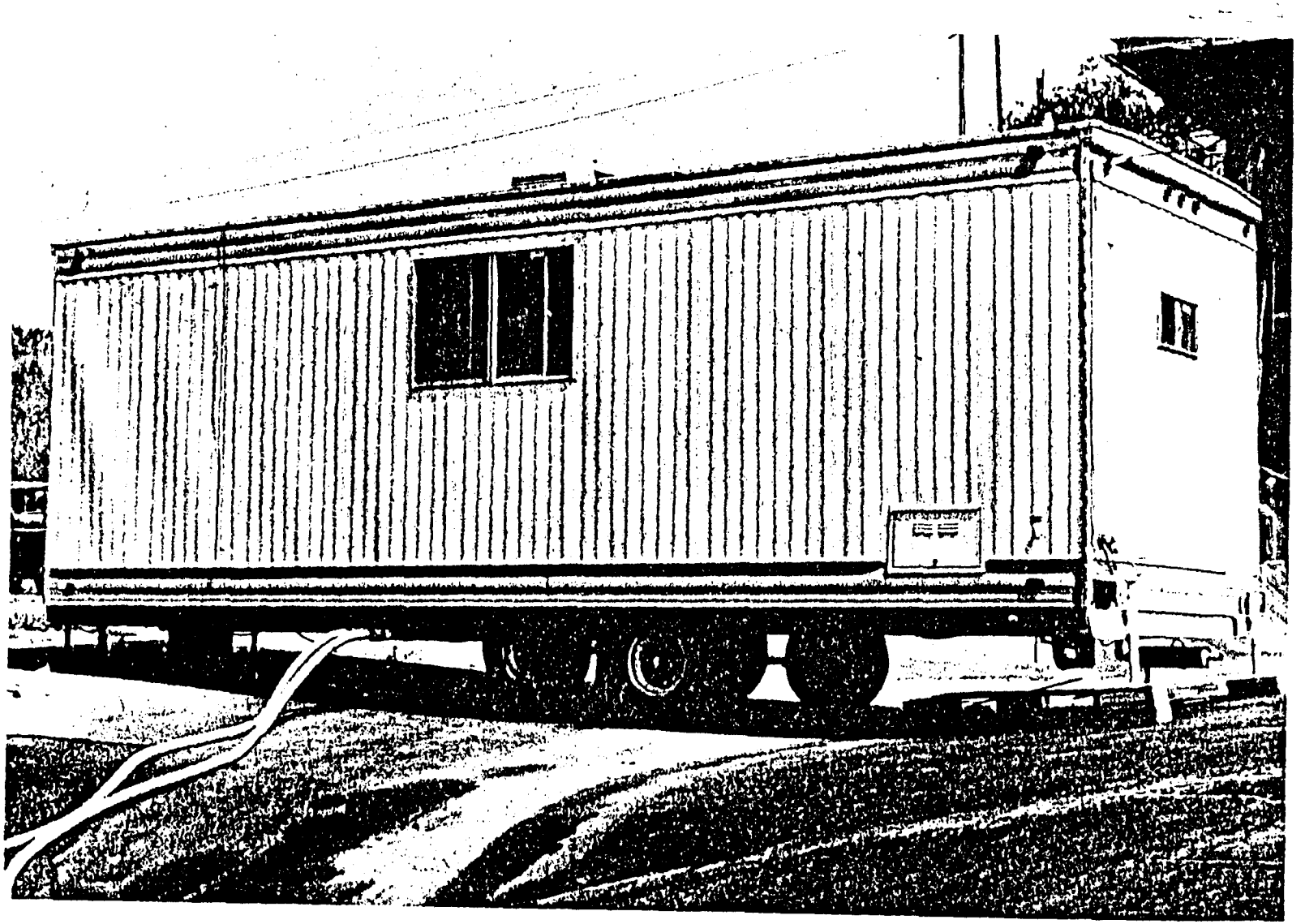

Figure 2. Hazardous Materials Spill Warning System, pictorial view.

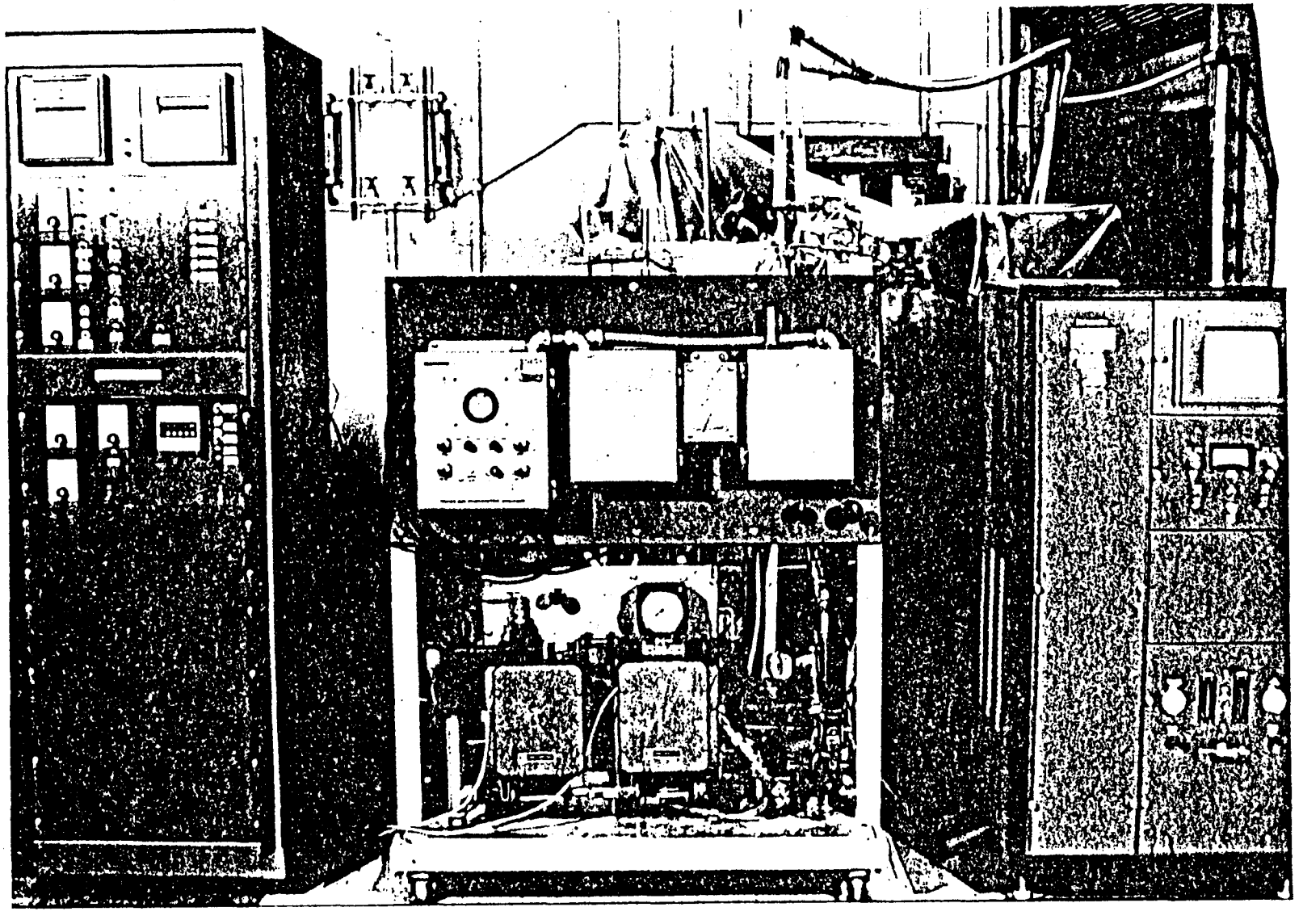

Figure 3. Hazardous Materials Spill Warning System

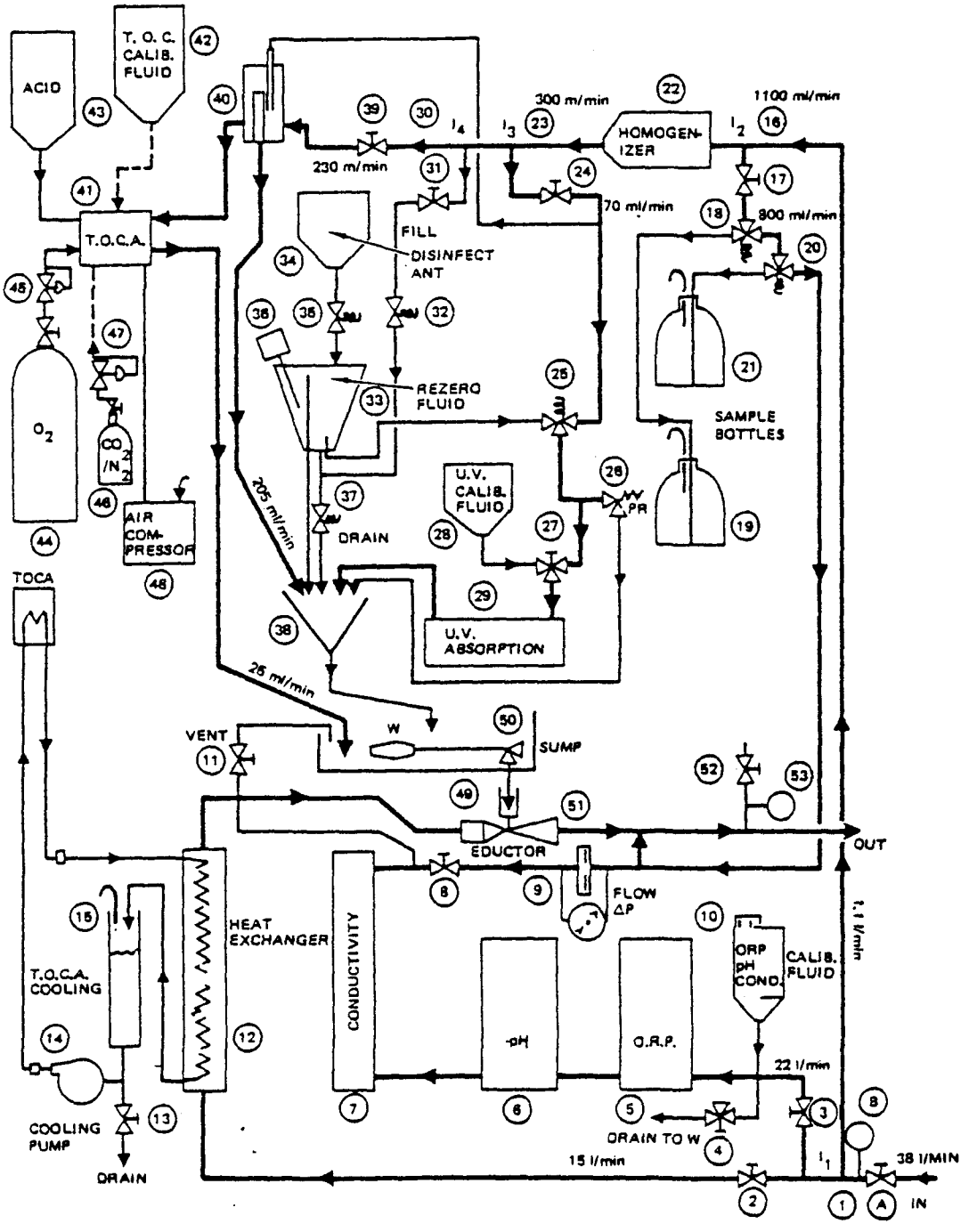

Figure 4. Warning system flow diagram showing nominal flowrates (main flow in heavy lines)

TABLE 1. CHARACTERISTICS OF PROSSER PUMPS FOR WATER QUALITY MONITORING

Maximum performance		Head loss (friction) per 30.5 m of 2.5-cm-diameter pipe	
TDH*(m)	L/minute	@ L/minute	Loss in m
3.05	144	19	0.6
6.10	140	38	2.4
9.15	132	57	5.2
12.2	121	76	8.5
15.2	106	95	12.8
18.3	95	114	18.3
21.3	79	132	24.1
24.4	61	Valve = 6.1 m of pipe	
27.4	38	Fitting = 1.5 m of pipe	

Maximum performance		Head loss (friction) per 100 feet of 1-inch-diameter pipe	
TDH* (feet)	US GPM	@ GPM	Loss in feet
10	38	5	2
20	37	10	8
30	35	15	17
40	32	20	28
50	28	25	42
60	25	30	60
70	21	35	79
80	16	Valve = 20 ft of pipe	
90	10	Fitting = 5 ft of pipe	

*TDH - Vertical distance in meters (feet) from water level to analyzer entry point plus friction loss through pipe valves and fittings plus pascals required at analyzer x 10.17×10^{-5} (psi required at analyzer x 2.31).

The heavy lines in Figure 4 show the direction of flow during normal operation of the warning system when no alarm condition exists. The numbers indicate the ideal flowrates in the various parts of the system. Of the 38 L (10 gallons) per minute supplied by the submersible pump to the trailer, 1.1 L (0.3 gallon) per minute is isokinetically split at I_1; 22 L (5.8 gallons) per minute runs through the ORP, pH, conductivity cell, and out to waste. The remaining 15 L (4 gallons) per minute serves as the heat exchange fluid to cool the recirculating liquid that acts as coolant around the insulation for the furnace on the TOC analyzer. It also acts as a constant supply for the eductor and produces the pressure drop required to flush the various small streams to waste.

The 1100 ml/minute (17.4 gallons/hour [gph]) is split just above the homogenizer, into an 800 ml/minute (12.7 gph) stream and a 300 ml/minute (4.8 gph) stream. The larger stream usually goes to waste, but it also supplies the grab sample bottles when an alarm condition is detected and the three-way solenoid valve is opened in the appropriate direction to allow filling of the bottle. The 300 ml/minute output of the homogenizer normally feeds the ultraviolet absorptimeter and TOC analyzer, 70 ml/minute (1.1 gph) going to the uv cell and 230 ml/minute (3.6 gpm) to the TOC analyzer overflow.

The TOC analyzer requires only 25 ml/minute (0.4 gph). The remainder of the 230 ml/minute flow usually overflows and goes directly to waste. Once each day, however, the excess is used to fill the uv rezero reservoir automatically. When that operation occurs, a small quantity of biocide is also added from the disinfectant reservoir to produce a concentration of about 5 ppm of quaternary ammonium chloride to keep down algae growth.

Once per hour the rezero fluid automatically flushes out the uv cell at the same time as the electronic rezero circuit is engaged. This feature maintains a stable baseline for the uv output signal over the two-week period of unattended operation. The rezero fluid reservoir is conical and Teflon-lined so that particulate matter will not accumulate at the bottom, but will be swept out when it is emptied. The stirring motor, with which it is provided, maintains a water quality representative of that in the watercourse.

The TOC analyzer operates semicontinuously. The water sample is pumped continuously by a Masterflex pump at the rate of 25 ml/min (0.4 gph), and hydrochloric acid is added just before entry of the mixture to an air sparger where the carbon dioxide produced by the inorganic carbon compounds is stripped off. The sample containing only organic carbon compounds is then fed to the injector valve which incorporates several unique features. As shown in Figure 5, the injector face is continuously flushed with fresh fluid delivered by the sparger. The opening through which a constant volume of sample is injected into the furnace is flushed once to waste just before the entire injection port is turned to position it over the combustion tube and the fresh sample is forced into the furnace. Combustion of the sample at 900° C in a stream of oxygen converts all the carbon remaining in the water sample to carbon dioxide. The carbon dioxide content in the gas is sensed by a nondispersive ir-absorption unit. The strip-chart recorder can be made direct-reading by calibration with both a known concentration of carbon dioxide in a gas and a standard solution of potassium hydrogen phthalate. The injection valve

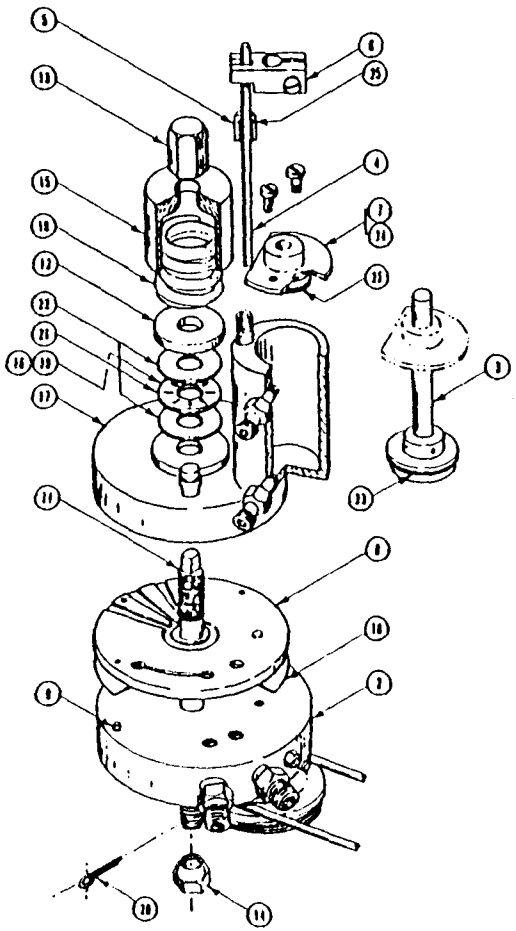

ITEM	DESCRIPTION	PART NO.
1	FINAL ASSEMBLY, ROTARY INJECTION VALVE	835-200
2	ASSEMBLY, WELDED BASE	835-202
3	ASSEMBLY, PISTON	835-203
4	PLUNGER	835-204
5	PLUNGER NUT	835-205
6	CROSS LINK	835-206
7	PISTON CAP	835-207
8	TEFLON DISC	835-208
9	LOCATING PIN	835-209
10	NEOPRENE GASKET	835-210
11	SPRING LOAD SHAFT	835-211
12	THRUST WASHER	835-212
13	SHAFT TOP NUT	835-213
14	UNIVERSAL NUT	835-214
15	SPRING RETAINER	835-215
16	DISCHARGE TUBE (HIDDEN)	835-242
17	PRESSURE PLATE, WELDED ASSEMBLY	835-243
18	COMPRESSION SPRING	080-697
19	UNION TEE ¼"SS (HIDDEN)	080-953
20	COTTER PIN	090-007
21	BEARING	090-634
22	THRUST RACE	090-636
23	O-RING No. 018	100-434
24	O-RING No. 010	100-447
25	O-RING No. 006	100-456

Figure 5. Rotary injection valve Model DC-60 TOCA (from Dohrmann manual).

operation frequency is determined by a selector switch that allows injection at 5-, 10-, 15-, 30-, 60-, or 180-minute intervals.

The entire warning system operates with the addition of insignificant quantities of extraneous materials to the waterway. The TOC analyzer consumes about 200 ml of 0.5 N hydrochloric acid per day to remove carbonate and bicarbonate from the water sample. With the normal total flow through the warning system of 38 liters per minute (10 gpm), this amount of hydrochloric acid corresponds to the introduction of 0.07 ppm (1.8×10^{-6} N) HCl to the effluent from the warning system if no inorganic carbon is present in the influent water. This concentration of acid is not enough to affect any beneficial uses of the waterway.

The rezero system for the ultraviolet absorptimeter requires a small (5 ppm) concentration of a quaternary ammonium chloride as a biocide to reduce algae growth. Each day, about 3.8 L (1 gallon) of the rezero fluid (primarily natural water from the watercourse being monitored) flows through the uv cell. The biocide present in the effluent will have a concentration of 3.4×10^{-4} ppm, assuming normal flow through the entire system, much too small to affect the beneficial uses of the waterway.

Alarm Control System

The alarm control system wiring diagram appears in Figure 6 and the corresponding front panel on the control console is shown pictorially in Figure 7. From the wiring diagram, it is seen that closure of any one of the single-pole, single-throw alarm switches, which occurs when the predetermined "normal" range of any one of the variables is exceeded, results in turning on the appropriate signal light and transmission of a signal to the time-delay relay TR_1. This relay fulfills several functions, the most obvious of which is to open the solenoid valve, SV_1 (18 of Figure 4), for a selected time to allow filling of the first grab sample bottle. When the alarm condition that triggered TR_1 no longer exists, the transfer relay TR_3 serves as a monitor to permit actuation of TR_2 if sufficient (preset) time elapses before the next alarm signal occurs. Then the second grab sample bottle is filled as a result of the solenoid valve SV_2 (20 of Figure 4) being opened for a selected time.

The occurrence of each alarm condition with sufficient "normal" operation between them also actuates one channel of a dual-channel automatic telephone dialer. Each channel is connected through a relay in parallel with the alarm signal light of each spill circuit. The device dials any selected telephone number and transmits a prerecorded message that announces the occurrence of the spill. The announcement can be made to an ordinary telephone if it is answered when the number is dialed. However, to avoid the need for continuous human monitoring of the receiving telephone, an automatic telephone answerer has been connected to the dedicated telephone receiving line. The Phonemate Remote 9000 records the message received from the automatic telephone dialer. This model includes a useful feature for this application. The answerer can be interrogated from any telephone by use of a pocket-size, battery-powered tone key that is coded to the answerer. Whether an alarm has occurred can be determined by calling the telephone answerer periodically without requiring constant surveillance of the telephone line.

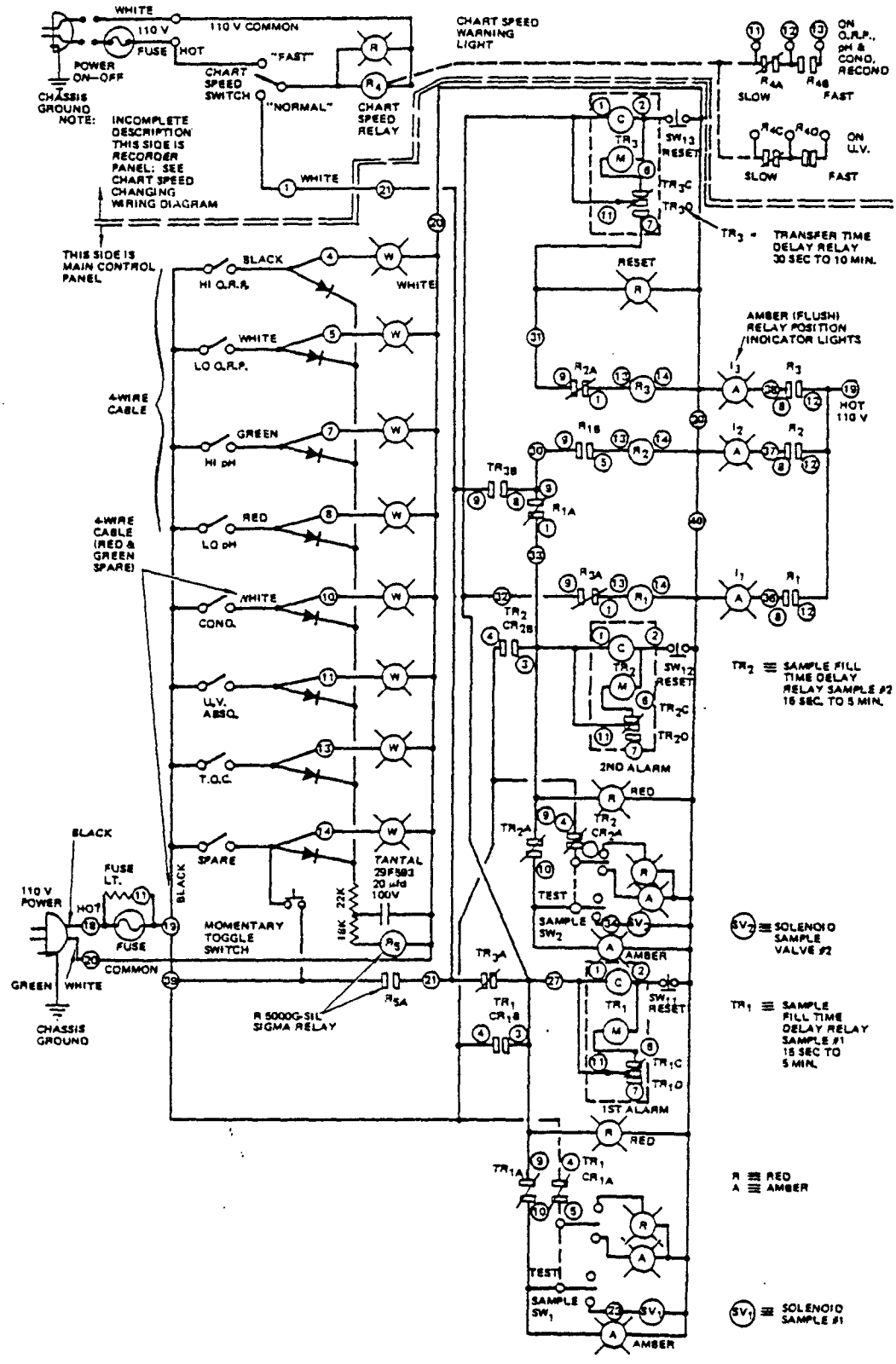

Figure 6. Alarm control system schematic.

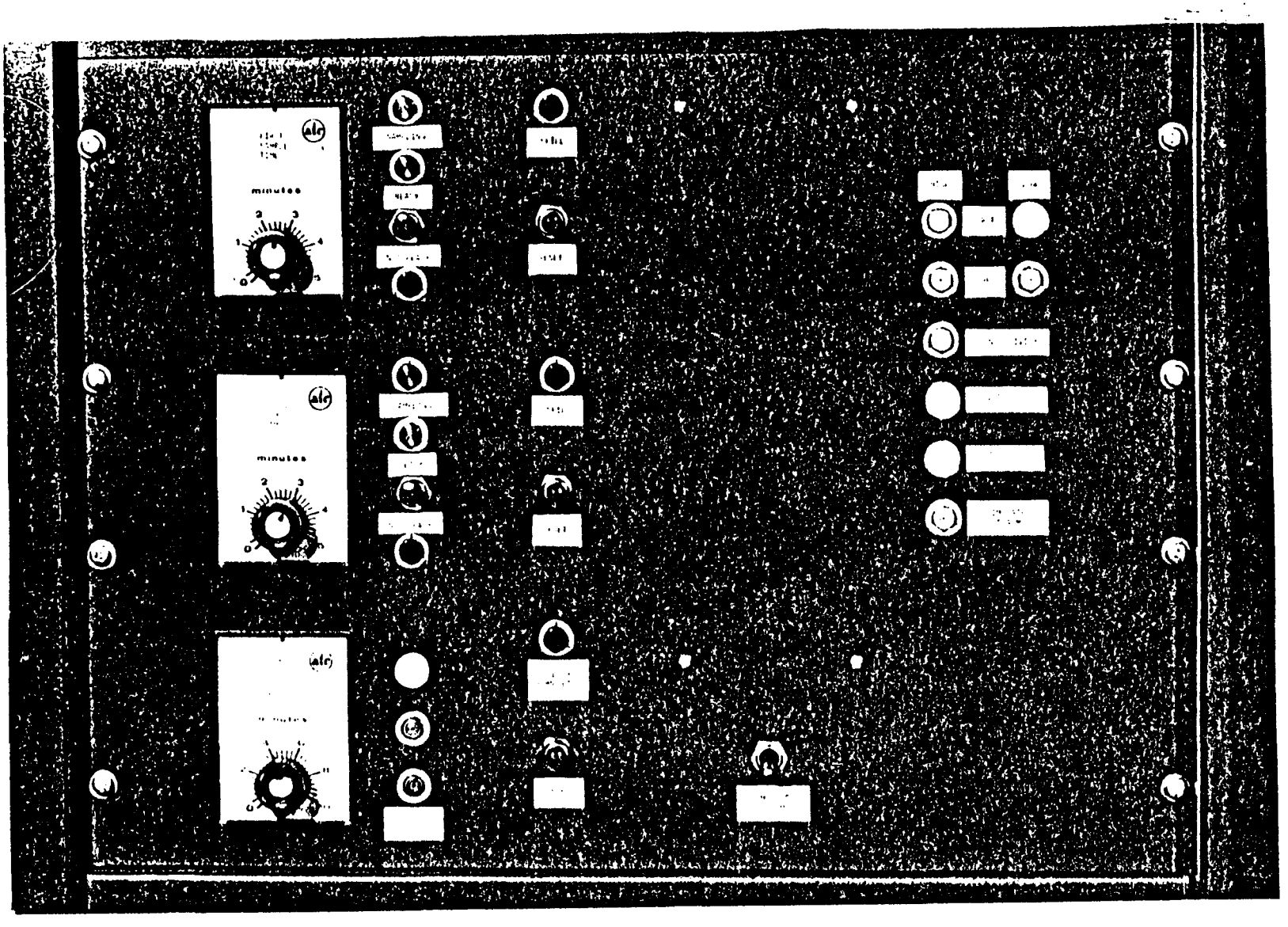

Figure 7. Alarm control system, pictorial view.

Detector Probes

The warning system was designed to detect as many as possible of the materials designated as hazardous by the EPA that appeared in 40CFR116 and the Consent Decree.

pH Probe--

The substances detected by the pH electrode at a concentration of about 0.1 ppm above the buffer capacity of the watercourse are listed in Table 2. This list assumes an equivalent weight of about 100 and a detection limit of 1 pH unit above or below that of the natural waterway. If the alarm conditions are to be preset for below pH 6.5 or above pH 8.5, strong acids or bases would have to be present in the water sample at a concentration level of more than 3×10^{-6} equivalents per liter (i.e., at about 0.3 ppm) above the buffer capacity of the natural water. The substances listed are either strong acids or bases or form strong acids or bases rapidly in contact with water. Weak acids and bases or substances that react with water to form them will also be detected by the pH electrode, but at higher concentration levels that depend on the strength of the acid or base.

Oxidation-Reduction Potential Sensor--

Hazardous substances detectable by the oxidation-reduction potential (ORP) electrode are listed in Table 3. Because redox equilibria are often established slowly and because of the variable oxygen content of the water, it is difficult to calculate precisely the concentration level at which each of these substances is detectable. The complexity of processes that normally occur in natural water leads to the measurement of a mixed potential. Despite the difficulty of interpreting the ORP precisely, it is claimed to be useful in detecting spills of chemicals (2) and it is for this purpose that the ORP electrode was included in the warning system.

Conductivity Sensor--

The electrical conductivity detector responds to water-soluble electrolytes. Hazardous substances that fall into this category are most salts (organic and inorganic), weak and strong acids and bases and substances that react with water to form them. Specific electrical conductivities of some typical hazardous materials are listed in Table 4 at a concentration level of one weight percent (3). For many salts the specific conductivity falls within a fairly narrow range at the one weight percent concentration level. The electrical conductivity is approximately directly proportional to concentration at lower concentrations. Hence the sensitivity of the electrical conductivity detector is roughly independent of the particular soluble salt that has been spilled. Strong acids and bases are more highly conducting than salts, but are generally detectable at lower concentration levels by the pH detector than by electrical conductivity.

The sensitivity of the conductivity sensor to detect a spill depends on the background conductivity of the natural water which is in turn related directly to the total dissolved (inorganic) solids in the water. This relation is shown graphically in Figure 8 (3).

TABLE 2. HAZARDOUS MATERIALS DETECTABLE AT THE 0.1-PPM LEVEL ABOVE BUFFER CAPACITY BY MEASUREMENT OF pH

Strong Acids or Acid Forming	Strong Bases or Base Forming
Acetyl bromide	Calcium carbide
Acetyl chloride	Calcium hydroxide
Antimony tribromide	Calcium oxide
Antimony pentachloride	Diphenylhydrazine
Arsenic trichloride	Potassium hydroxide
Benzoyl chloride	Sodium
Chlorine	Sodium hydroxide
Chlorosulfonic acid	Sodium methylate
Chlorophenol	Sodium sulfide
Chromic acid	
Dichlorophenol	
Hydrochloric acid	
Nitric acid	
Pentachlorophenol	
Phenol	
Phosphoric acid	
Phosphorus oxychloride	
Phosphorus pentasulfide	
Phosphorus trichloride	
Sulfuric acid	

If it is assumed that a sudden 20-percent increase in conductivity can be reliably ascribed to a spill of an electrolyte, this would correspond to an increase of about 20 ppm in the dissolved solids content of a river with about 100 ppm natural dissolved solids, such as the Columbia River (3). However, in

TABLE 3. HAZARDOUS MATERIALS DETECTABLE BY OXIDATION-REDUCTION POTENTIAL

Ammonium bisulfite	Potassium chromate
Ammonium hypophosphite	Sodium bichromate
Ammonium oxalate	Sodium chromate
Ammonium persulfate	Iron (II) compounds (3)
Ammonium sulfide	Hydroxylamine
Ammonium sulfite	Lead compounds
Ammonium thiosulfate	Mercury compounds
Arsenic compounds	Phosgene
Cadmium compounds	Nickel compounds
Calcium arsenite	Nitrosomines
Calcium hypochlorite	Potassium permanganate
Chlorine	Resorcinol
Ammonium bichromate	Selenium compounds
Chromic acid	Silver compounds
Chromous chloride	Sodium bisulfite
Calcium chromate	Sodium arsenite
Copper compounds	Sodium hypochlorite
Potassium arsenite	Thallium sulfate
Potassium bichromate	Zinc compounds

the Rio Grande River with its 791 ppm dissolved solids (3), the same criterion would be met only if the spill produced a 160-ppm increase in the dissolved solids content.

The more than 150 hazardous substances detectable by the electrical conductivity increase produced when they are spilled in natural water are listed in Table 5 (3, 4). Many of them are not detected by the other sensors in the warning system package. Although more sensitive instruments are available for detecting certain species, e.g., specific ion electrodes for particular metallic ions or anions, their selectivity would complicate the instrument package by requiring that many specific electrodes be incorporated into the device.

Ultraviolet Absorptimeter--

The differential ultraviolet absorption instrument records the ratio of the sample absorption at two wavelengths determined by the choice of optical filters inserted in a rapidly rotating filter wheel. As outfitted for the warning system, the absorptimeter is equipped with a 390-nm filter as the reference wavelength and a 230-nm filter for the measuring wavelength. The

TABLE 4. SPECIFIC CONDUCTIVITY OF SOME HAZARDOUS MATERIALS IN WATER
(Concentration = 1 weight percent)

Substance	Specific Conductivity (mmho/cm)	Substance	Specific Conductivity (mmho/cm)
Acetic acid	0.7	Nitric acid	56.1
Ammonia	0.7	Phosphoric acid	10.1
Cadmium chloride	5.3	Potassium chromate	10.8
Cupric sulfate pentahydrate	5.4	Potassium dichromate	7.3
		Potassium hydroxide	38.3
Formic acid	2.4	Potassium permanganate	6.9
Hydrochloric acid	92.9	Sodium dichromate	6.9
Lead nitrate	5.4	Sodium hydroxide	48.6
Nickel sulfate	5.8	Sulfuric acid	47.8

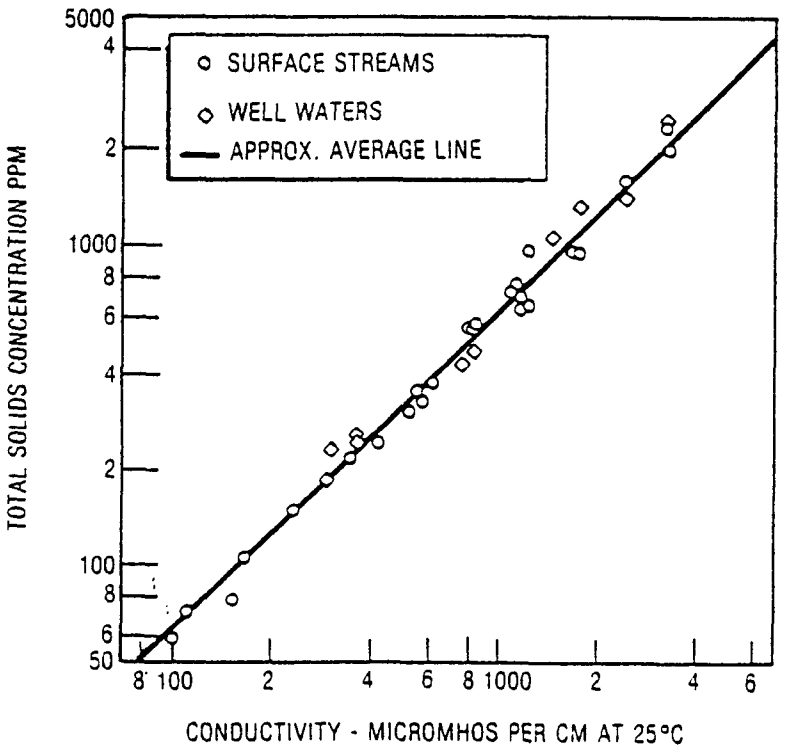

Figure 8. Relation between total dissolved solids and electrical conductivity (3).

TABLE 5. HAZARDOUS MATERIALS THAT ARE ELECTRICALLY CONDUCTING IN AQUEOUS SOLUTION

Substance	No. of Compounds*	Substance	No. of Compounds*
Acetyl bromide	-	Nitric acid	-
Acetyl chloride	-	Phosphoric acid	-
Aluminum sulfate	-	Phosphorus trichloride	-
Ammonia	-	Potassium hydroxide	-
Ammonium compounds	26	Potassium permanganate	-
Antimony trichloride	-	Selenium dioxide	-
Arsenic compounds	6	Sodium selenite	-
Benzoyl chloride	-	Sodium	-
Beryllium compounds	3	Sodium bisulfite	-
Cadmium compounds	3	Sodium bifluoride	-
Calcium compounds	4	Sodium fluoride	-
Chlorine	-	Sodium hydrosulfide	-
Chlorosulfonic acid	-	Sodium hydroxide	-
Chromium compounds	14	Sodium hypochlorite	-
Cobalt compounds	4	Sodium methylate	-
Copper compounds	8	Sodium nitrite	-
Cyanide compounds	4	Sodium phosphate	-
Dodecylbenzenesulfonic acid salts	4	Sodium sulfide	-
Hydrochloric acid	-	Sulfuric acid	-
Iron compounds	9	Uranium compounds	4
Lead fluoborate	-	Vanadium compounds	2
Lead nitrate	-	Zinc compounds	13
Mercury compounds	3	Zirconium compounds	6
Nickel compounds	5		

*Number of compounds in class on Hazardous Substances List.

measuring wavelength selected was chosen because the absorption of many inorganic complexes increases rapidly with decreasing wavelength below 240 nm. The sensitivity for detection of many aromatic organic compounds is still high at the 230-nm measuring wavelength. The choice will therefore provide better sensitivity for many inorganic complexes than the more usual choice of 254 nm. This higher measuring wavelength is also frequently chosen because of the high intensity of a mercury arc lamp at 254 nm. On the other hand, the continuous emission spectrum produced by the deuterium lamp in the model used for the warning system allows more flexibility in the choice of reference and measuring wavelengths than can be available from a light source such as a mercury arc lamp. For some purposes it may be desirable to choose another combination of wavelengths. This change requires only replacement of the filters in the filter wheel of the Teledyne General Purpose Analyzer.

The Teledyne instrument has a built-in electronic rezeroing system which is engaged every hour and lends baseline stability. Associated with this system is provision for an auxiliary system to flush out the sample cell with fluid stored in a reservoir. The electronic control for this rezero fluid system is shown in Figure 9. The rezero fluid is replaced once each day and biocide is added to reduce proliferation of living matter. This hourly flushing of the cell simultaneous with electronic rezero aids in the maintenance of a stable zero reading over an extended period.

A *partial list of hazardous substances detectable by the ultraviolet absorptimeter* appears in Table 6.

Total Organic Carbon Analyzer--

All organic compounds are detectable by the Dohrmann Model DC-60 Total Organic Carbon (TOC) Analyzer. This instrument operates semicontinuously. Samples can be injected at intervals no less than 5 minutes apart. After removal of the inorganic carbon compounds, a controlled sample volume is injected into a high-temperature furnace where oxygen converts all the organic carbon into carbon dioxide. The quantity of carbon dioxide in the effluent gas is measured in a nondispersive infrared unit and is related to the organic content of the original water sample. The entire process takes place automatically and periodic electronic rezeroing and a stable infrared detection system combine to make zero drift small over the two-week unattended period.

When the first alarm includes triggering by the TOCA, the second alarm will not occur, since the TOCA alarm is not reset automatically when the alarming material passes the sampling point.

The water sample passes through a homogenizer before it arrives at the small (1.5-mm- [0.059-inch-] -diameter lines in the ultraviolet and TOC detectors. The Raytheon homogenizer consists of a conical ceramic rotor with adjustable clearance between it and the ceramic stator allowing variable extent of comminution of particles. Suspended solid material is reduced in size to ≈ 100 μm.

Detector Calibration

Calibration of the major detection components is accomplished by

TABLE 6. HAZARDOUS MATERIALS DETECTABLE BY ULTRAVIOLET ABSORPTION

Aromatic Organic	Aromatic Organic
Acenaphthene	Methoxychlor
Aldrin/Dieldrin	Naphthalene
Aniline	Nitrobenzene
Benzene	Nitrophenols
Benzidine	Pentachlorophenol
Benzoic acid	Phenol
Benzonitrile	Phthalate esters
Benzoyl chloride	Polychlorinated biphenyls
Benzyl chloride	Polynuclear aromatic hydrocarbons
Chlordane	Quinoline
Chlorinated benzenes	Resorcinol
Chlorinated naphthalene	Styrene
Chlorinated phenols	Toluene
Cresol	TCDD
Dichlorobenzedine	Trichlorophenol
DDT	Xylene
2,4-D (acid)	Xylenol
2,4-D (esters)	
2,4,5,T-(acid)	
2,4,5,T-(esters)	
Dinitrobenzene	
Dinitrophenol	
Diphenylhydrazine	
Endrin	
Ethylbenzene	
Fluoranthene	
Guthion	
Heptachlor	
Kelthane	

Inorganic	No. of Compounds*
Cobalt compounds	4
Copper compounds	8
Iron compounds	9
Nickel compounds	5
Sodium nitrite	
Uranium compounds	4

* Number of compounds in class on Hazardous Substances List.

following instructions in the individual operating manuals. To perform these calibrations, the following solutions are required:

1. Commercially available buffer solutions at pH 4 and 7 to calibrate the pH electrode.

2. Solutions of potassium chloride of concentrations that exhibit about the same electrical conductivity as that of the waterway.

3. Potassium hydrogen phthalate, 10 ppm, to calibrate the uv absorptimeter. [The material(s) causing high uv absorption at 230 nm may not be identified; this calibration therefore does not suffice to assign a concentration to the spilled material.]

4. Potassium hydrogen phthalate, 375 ppm, to calibrate the TOC analyzer.

5. Zobell solution to calibrate the redox potential electrode. The composition of this solution is:

   0.003 M potassium ferricyanide
   0.003 M potassium ferrocyanide
   0.1 M potassium chloride

   The redox potential of this solution as measured by a platinum electrode versus a saturated calomel electrode is given as:

   $$E \text{ (observed)} = 0.185 + 0.00164\ (25-t^{\circ}C)\ (5).$$

Calibration of the detection components should be performed at least once per month, and more frequently if a malfunction is suspected.

Other Materials Required

In addition to the calibration solutions, other materials required for the operation of the warning system for the two-week period are:

1. Biocide for the uv rezero fluid - one liter, 300 ppm aliphatic quaternary ammonium chloride.

2. TOC analyzer acid - three liters 0.5 N hydrochloric acid.

3. TOC analyzer compressed gas - 240 cubic feet (STP) oxygen to oxidize the organic compounds in the water sample to carbon dioxide and water.

SECTION 4

SYSTEM TESTING

LABORATORY EVALUATION OF INDIVIDUAL DETECTION COMPONENTS

The major detection components were first placed into operation as they were received and tested briefly to become familiar with their individual characteristics. The Leeds & Northrup pH, ORP, and conductivity detection components were treated as a single unit since their power supplies and recorder circuits were housed in a single cabinet.

Ultraviolet Absorptimeter

The Teledyne photometric analyzer was the first detection component to be placed in operation. Its sensitivity to detect some of the substances on the hazardous materials list in distilled water was determined using the 230-nm measuring wavelength and the 390-nm reference wavelength with which the instrument was delivered, and the 2.54-mm (0.1-inch) -thick optical cell. Solutions of known concentration of various materials were prepared by dissolving weighed quantities of various solids in distilled water and making up to volume in volumetric flasks.

Lower concentrations were prepared from these stock solutions by successive dilution. Flow of sample through the 2.54-mm (0.1-inch) absorption cell was alternated with flow of distilled water, using a manual valving arrangement. The instrument output was recorded on a Sargent Type SR strip-chart recorder initially, and later on a Hewlett-Packard Model 7100B recorder. The difference in signal between sample and distilled water was plotted against the sample concentration, and at low concentrations the plots were generally linear. The results were expressed as a concentration at which the hazardous material would produce an alarm signal of 0.5 mV.

For benzene, a solution was prepared in distilled water by injecting a volume of benzene measured with a microliter syringe into water and making up to a known volume. Various lower concentrations were prepared by dilution. The benzene-in-water solutions were fed by gravity from a reservoir through rubber and polypropylene tubing to the absorption cell. The benzene may have been strongly sorbed by the tubing, so that the actual concentration flowing through the uv absorption cell may have been less than in the reservoir.

The Aldrin tests were done by starting with a saturated solution of the Technical grade insecticide in water, filtering the excess undissolved solid and diluting the solution tenfold. The actual concentration of Aldrin, or in

fact, the identity of the uv absorbing species in the test solution, is not determined.

The results are listed in Table 7. Both the concentration required to produce a signal of 0.5 mV and the sensitivity in mV/ppm are tabulated. The results for benzene are subject to error because of likely loss in the tubing connections between the sample reservoir and the uv absorption cell.

The results listed in Table 7 were obtained using distilled water as the reference liquid. Natural water may very well exhibit some uv absorption itself at the 230-nm measuring wavelength. This natural absorption would act as a background above which the spilled hazardous material would have to absorb to provide an alarm signal. Incidentally, sodium nitrate, which is not a hazardous material, apparently absorbs less strongly than sodium nitrite, which is on the hazardous materials list.

The electronic stability was measured and found to be adequate. However, zero drift was observed as a result of condensation of moisture on the windows. This problem was overcome by installing a muffin fan in the instrument and providing a vent in the light source housing. Circulation of air through the previous stagnant areas around the flow cell essentially prevented moisture condensation.

TABLE 7. SENSITIVITY OF ULTRAVIOLET ABSORPTION SENSOR FOR SOME HAZARDOUS MATERIALS

Material	Concentration, ppm, to produce 0.5 mV alarm signal	Sensitivity, mV/ppm
Potassium hydrogen phthalate	0.4	1.25
Resorcinol	0.5	1.0
Benzene*	23	0.022
Sodium nitrate	0.9	0.56
Sodium nitrite	0.5	1.0
Copper sulfate	4.9	0.10
Aldrin	1/10 saturation	--

* See text for possible explanation of benzene loss during tests.

Malfunctions in the uv absorptimeter observed during the nearly two years of intermittent operation included the following:

1. An operational amplifier (the Extended Voltage Amplifier) failed. Satisfactory operation resulted when the component was replaced with a standard off-the-shelf unit.

2. A solid-state voltage regulator that supplies the rest of the electronics with a stable ± 15 VDC was replaced.

3. The deuterium lamps required periodic replacement.

4. The entire instrument was serviced by a factory representative in September 1977, before testing at the Los Angeles River. Several components were upgraded during this procedure.

ORP, pH, Electrical Conductivity

The Leeds & Northrup module, consisting of pH, electrical conductivity, and oxidation-reduction potential (ORP) sensors, together with the power supply-recorder unit, was installed in a flow loop to permit evaluation of its performance.

The flow loop employed the Prosser submersible pump immersed in a 208-liter (55-gallon) drum to circulate about 180 liters of water at a rate of 30 liters per minute through the three housings which contained the individual sensors. A means was also provided to isolate the sensing points from the flow loop and to replace the fluid surrounding the sensors with a calibration fluid.

The recorder was first calibrated utilizing electrical potentials simulating outputs from the sensors. The sensor and measuring instrument-recorder combinations were then further calibrated by comparing indicated instrument output with the known values of standard solutions that had been checked with laboratory instruments. The above three parameter sensing systems appeared to be functioning properly.

The Leeds & Northrup recorder and the alarm level set points associated with the ORP, pH, and conductivity sensors were checked and found functioning properly. Measurements were made of the dead-band inherent in the mechanical alarm level set points. A dead-band of between 1/3 and 1/2 of 1 percent of full scale was measured, which is entirely acceptable.

A preliminary experiment simulating a spill of calcium hypochlorite was made by suddenly adding one gram of $Ca(ClO)_2$ to 135 liters of tap water which was being circulated through the sensing flow loop. This caused a change of 240 mV in the oxidation-reduction potential which was more than enough change than required to give an alarm indication. Similarly, 25 cc of acetic acid added to 135 liters of tap water changed the pH from 8.1 to 4.8, again enough to activate the alarm relay for pH on the low side. The addition of 19 grams of NaOH then caused a similar upper alarm signal to be given since the pH was raised to about 9.2.

The electrical conductivity was driven off scale on the high side after addition of the sodium hydroxide, giving an additional alarm signal for high conductivity.

Samples of the circulating fluid were taken at intervals and measured with calibrated laboratory instruments. Good agreement was obtained between all three process sensors and their respective laboratory counterparts.

The stability of the above three measurement systems with respect to line voltage variations was also determined. The pH and ORP outputs were found to be virtually independent of line voltage variations between 90 and 120 volts. The conductance was found to change about 2 percent of span in the same direction as the line voltage over the above range of line voltages. This stability was considered to be adequate when compared to conductivity variations to be found in a natural watercourse.

The Leeds & Northrup instruments have required no repair since they were placed in operation.

TOC Analyzer

The Dohrmann Model DC-60 Process Total Organic Carbon Analyzer (TOCA) selected was a high-sensitivity unit equipped with two operating ranges, 0-10 and 0-500 mg carbon (C) per liter. Its performance was checked following the operating instructions supplied with the instrument and found to be within specifications.

To gain experience in the operation of the TOCA and to provide information on the carbon content of in-house distilled and tap waters, distilled and tap water streams with and without the addition of acid and subsequent sparging were monitored by the TOCA. Results showed no inorganic carbon and very little organic carbon (considerably less than 1 mg C per liter sample) present in the distilled water, confirming the belief that standards for calibration of the TOCA could be formulated using the distilled water as received. Tap water exhibited a much greater total carbon (TC) level than the distilled water and a tenfold decrease to TOC when the sample stream was acidified and sparged.

The instrument was calibrated using a standard solution of potassium hydrogen phthalate containing 7.5 mg C per liter. Solutions of several organic compounds in distilled water were prepared containing 9.0 mg C per liter. The results obtained in both the TC and TOC modes of operation of the instrument are shown in Table 8. The results show that the aqueous solutions of chloroform and chlorobenzene produced extremely low TOC values. This effect appears to be principally due to the sparging (in the TOC mode) of the aqueous solutions of these volatile, hydrophobic organic compounds. However, even without the acid sparging, their respective TC values were somewhat lower than nominal.

Another interesting phenomenon was observed in the case of nitrobenzene, i.e., both the TC and TOC values appeared to approach a steady-state value asymptotically. This behavior is probably due to absorption of the nitrobenzene by the Tygon tubing used for fluid transfer lines in the DC-60. Support of this belief was obtained subsequent to the nitrobenzene runs; about

TABLE 8. CARBON CONTENTS OF AQUEOUS SOLUTIONS* OF SELECTED ORGANIC COMPOUNDS AS MEASURED BY THE DOHRMANN DC-60 CARBON ANALYZER

Organic Compounds	TC		TOC	
	Average	Range	Average	Range
Acetic acid**	8.9	8.8-8.95	8.6	8.6-8.7
Chlorobenzene**	3.0	2.7-3.2	0.1	0.1-0.1
Chloroform**	4.3	4.2-4.4	0.3	0.1-0.5
Methanol	9.4	9.2-9.6	8.7	8.45-9.15
Nitrobenzene**	7.1	6.8-7.5	5.3	4.75-5.8
Pyrogallol***	8.9	8.8-9.1	8.6	8.4-8.8
Tannic acid***	7.8	7.7-8.2	7.7	7.4-8.8

* All monitored solutions were formulated to a TOC of 9 mg C/l, and all data are listed in units of mg C/l.

** On December 30, 1975 Hazardous Substances List.

*** On August 22, 1974 Hazardous Substances List.

a dozen distilled water injections were required before the TOC readout fell to the nominal value of 0.1 mg C per liter for distilled water. Replacement of the manufacturer-supplied Tygon tubing with Teflon tubing may eliminate this absorption problem. The remaining organics produced TOC values close to their nominal values.

When the TOCA was operated on an around-the-clock basis, with injection of a water sample at 5-minute intervals, several minor problems were eliminated one at a time by slight modifications in procedure and/or in the instrument. Chloride deposition in the ir-sample cell was reduced/eliminated by decreasing the concentration of hydrochloric acid used in the sparging process from 3N to 0.5N. The plunger of the rotary injection valve tended to bind over a period of time; its operation was greatly improved by replacing the bare stainless steel plunger with a Teflon-coated one supplied by the manufacturer. The operation of the gas-liquid separator was improved and simplified and pressure buildup prevented by changing the position of one of the lines and leaving it open to the air.

Other malfunctions were observed during extended operation of the TOCA and were corrected. Introduction of water samples containing sufficiently high carbon contents to exceed the alarm levels did not always produce an alarm. This malfunction was the result of defective or failed components on the clock/

overrange circuit board. This board was upgraded, on being returned to the manufacturer, and placed back into service.

Another difficulty manifested itself in the following symptom: a 375 mg C per liter potassium hydrogen phthalate (KHP) solution registered a response in the high ir range, "HI OPER" function position (although lower than usual), yet a 7.5 mg C per liter KHP solution did not register a response in the low ir range, "LO OPER" function position, with all other aspects of the operation appearing normal. While tests were being conducted which showed that the ir module was responsive to CO_2/N_2 span gas in both range settings, it was observed that the recorder pen responded (in the detector output position) by first moving downscale before returning and moving upscale, the normal procedure being to move directly upscale. It was this peculiarity which essentially led to a definition of the problem and its ultimate resolution. The problem was caused by an unbalance between the reference and sample cells in their module, a situation that (according to Dohrmann engineers) occurs periodically and which can be and was adjusted electronically.

The Homogenizer

Although it is not a detection component, one of the important parts of the warning system is the Raytheon Model 2650 homogenizer. This device is capable of reducing the size of particles from 6 mm (1/4 inch) to 100 to 1200 μm, depending on adjustments with the small throughputs necessary to feed the uv and TOC sensors. (As shown in Figure 4, the nominal flowrate through the homogenizer is 300 ml/minute, or about 4.8 gallons/hour -- much smaller than the minimum flowrate for which most on-stream homogenizers are designed.)

Two major problems were encountered with the homogenizer as received, aside from relatively minor leaks that were eliminated by judicious use of Teflon tape. The homogenizer was first installed and used in February 1976, and the first major difficulty traceable to it was plugging of all downstream lines in May 1976 after several continuous runs in the laboratory, the last one of six days' duration. Despite efforts to continue the test by repeatedly cleaning valves and lines to the uv and TOC, and reassembling the system, flow below the homogenizer remained far less than nominal. When the homogenizer was disassembled, the aluminum housing was found to be badly corroded. A substantial quantity of gelatinous material, apparently aluminum hydroxide, covered the inside surface of the housing. The presence of this material would explain the observed impediment to flow.

After removing the gelatinous deposit on the aluminum housing, an attempt was made to reduce the rate of corrosion by applying a water-repellent silicone coating, Union Carbide L-31. This coating was not sufficiently impervious and/or adherent to prevent formation of more aluminum hydroxide during the next continuity test. Accordingly, the aluminum housing was replaced by one fabricated from stainless steel. This improvement entirely eliminated the line-plugging due to corrosion products.

After a 19-day continuity run made in July 1976 with the stainless steel housing, the homogenizer was again the cause for terminating the test. On this occasion, the ceramic conical stator separated from its mount and came into

contact with the rotor. Both rotor and stator were considerably abraded and produced a quantity of fines that plugged the downstream lines. The homogenizer was then returned to the manufacturer for repair. Since its reinstallation in the warning system, the homogenizer has operated satisfactorily in both laboratory and field tests.

LABORATORY EVALUATION OF INTEGRATED SYSTEM

The integrated system was evaluated in the laboratory by continuously pumping a tap water sample from a 208-liter (55-gallon) drum through the entire system using the Prosser pump immersed in water in the drum. Recirculating the same water resulted in a gradual but considerable temperature rise. To prevent undue overheating, a portion of the water was withdrawn and replaced with fresh tap water. Only when a hazardous material was added to the water in the drum was the partial replacement temporarily stopped to assess the effect of the addition. Between additions of different hazardous materials, the rate of water replacement was increased to accelerate flushing one material out of the system before testing the next. Usually, whatever alarm condition was produced by the hazardous material was eliminated by flushing before the next hazardous material was added.

During a period when the TOC Analyzer was not in operation, a number of inorganic materials were added incrementally to about 180 liters (50 gallons) of water in the drum. The response of the other four detection components is shown in Table 9. For many of the inorganic materials tested, the increase of electrical conductivity that they produce will serve as the means for their detection. However, several of the colored materials would be detected at lower concentration levels by the differential uv absorption. This observation applies also to colorless nitrates, such as lead nitrate and ammonium nitrate, which will be detected more reliably by the uv device than the other three sensors.

The effect of ammonium dichromate on the uv device results from its stronger absorption at the reference wavelength of 390 nm than at the measuring wavelength of 230 nm. The measured differential absorption of the water, therefore, falls in the presence of ammonium dichromate. Only 11 ppm of the salt (2 grams in 180 liters) is sufficient to produce a differential uv absorption that is negative under the stated conditions.

During these tests the alarm levels were set as follows: pH ±0.5, ORP ±10% of full scale, conductivity +10 μmho/cm, uv +0.5 mV. Under these alarm settings, all the inorganic materials tested would have produced an alarm from one or more of the sensors at the 16 ppm level or less except zirconium oxychloride. It should be noted that although these alarm settings are adequate for the tap water in use, it was recognized that they would probably need to be reset for a natural waterway. In particular, the electrical conductivity alarm level setting would depend on the baseline conductivity of the water.

Organic and metal-organic compounds were tested, usually when the TOC analyzer was operating, by the same incremental addition of weighed quantities to 180 liters of recirculated tap water in the drum. The results are displayed in Table 10. For several common nonvolatile water-soluble organic compounds such as acetic anhydride, benzoic acid, phenol, diethylamine, and

TABLE 9. EFFECT OF SOME INORGANIC COMPOUNDS ON pH, ORP, CONDUCTIVITY AND UV ABSORPTION

Material	pH	ORP % Full Scale	Conductivity µmhos/cm	UV Absorption % Full Scale
Tap water (180 liters)	7.8	64	319	5.0
Potassium permanganate				
1 g	7.8	64	328	6.5
Tap water	8.6	64	319	5.0
Potassium permanganate				
1 g	8.5	62	328	6.5
+ 1 g	8.5	61	333	9.5
+ 1 g	8.6	60	338	11.0
+ 1 g	8.7	60	343	14.5
Tap water	8.5	65	324	5.0
Cupric chloride (anhydrous)				
1 g	8.3	66	328	5.0
+ 1 g	8.2	66	333	8.0
+ 2 g	7.9	67	338	12.5
Tap water	8.6	67	324	5.5
Ammonium nitrate				
1 g	8.6	60	333	9.0
+ 1 g	8.5	59	345	11.8
+ 1 g	8.5	58	348	14.5
+ 1 g	8.5	57	357	17.5
+ 1 g	8.4	55	367	20.0

(continued)

TABLE 9. (continued)

Material		pH	ORP % Full Scale	Conductivity μmhos/cm	UV Absorption % Full Scale
Tap water		8.4	65	324	5.0
Ammonium carbonate					
	1 g	8.5	55	328	5.0
	+ 1 g	8.6	51	343	5.0
Tap water		8.2	68	324	5.0
Zirconium oxychloride					
	1 g	8.3	71	328	5.0
	+ 1 g	8.3	71	328	5.0
Tap water		8.6	72	328	5.0
Ammonium chloride					
	1 g	8.5	64	343	5.1
	+ 1 g	8.5	57	357	5.1
Tap water		8.6	69	324	5.0
Ammonium hydroxide (concentrated)	1.75 ml	9.0	53	338	5.0
	+ 1.75 ml	9.2	50	346	5.0
Ammonium dichromate					
	1 g	8.4	58	333	4.0
	+ 1 g	8.2	57	343	< 0.0
Ammonium bifluoride					
	1 g	8.2	58	333	5.0
	+ 1 g	8.0	57	348	5.0

(continued)

TABLE 9. (continued)

Material		pH	ORP % Full Scale	Conductivity µmhos/cm	UV Absorption % Full Scale
Ammonium persulfate					
	1 g	8.4	57	328	5.0
	+ 1 g	8.4	55	338	5.0
Tap water		8.5	71	318	5.0
Aluminum fluoride					
	1 g	8.5	70	328	5.0
	+ 1 g	8.5	70	328	5.0
Cupric nitrate					
	1 g	8.4	70	328	6.0
	+ 1 g	8.1	58	333	7.0
Lead nitrate					
	1 g	8.4	68	323	7.2
	+ 1 g	8.3	67	326	8.2
Sodium hydroxide					
	1 g	9.1	69	343	5.4
	+ 1 g	9.3	64	348	5.4
Nitric acid (70%)					
	1.4 g	8.3	74	328	5.9
	+ 1.4 g	8.0	77	333	6.4
Potassium hydroxide					
	1 g	9.2	74	333	5.0
	+ 1 g	9.5	77	348	5.0

(continued)

TABLE 9. (continued)

Material	pH	ORP % Full Scale	Conductivity µmhos/cm	UV Absorption % Full Scale
Nickel nitrate				
1 g	8.4	71	338	5.4
+ 1 g	8.4	72	348	5.4
Phosphoric acid (85%)				
1.2 g	8.0	75	333	5.0
+ 1.2 g	7.8	76	338	5.0

UV absorption - full scale ≡ 5.0 mV output.

Alarm settings - pH ±0.5, ORP ±10% full scale, conductivity +10 µmho/cm, UV +10% full scale.

TABLE 10. (continued)

Material	Concentration ppm (Total)	Concentration ppm (C)	ΔpH	ΔORP % Full Scale	ΔConductivity μmhos/cm	ΔUV Absorption % Full Scale	TOC % Full Scale
Benzoic acid	5.5	3.8	0	0	0	27	30
	11	7.6	0	0	0	60	45
Chlorobenzene	6	3.8	0	2	5	0	0
	12	7.7	0	2	5	0	0
	270	173	0	2	5	17	*
Phenol	6.6	5.1	0	0	0	10	30
	12.1	9.3	0	-2	0	20	55
Chloroform	8.2	0.83	0	0	0	0	0
	16.4	1.66	0	0	0	0	0
	400	40.4	0	0	0	0	30
Diethylamine	3.8	2.5	0.2	-9	5	3	30
	7.6	5.0	0.3	-13	10	7	*
Paraformaldehyde	5	2	0	-2	5	0	10
	10	4	0	-14	5	0	20
	65	26	0	-22	5	3	>100
Resorcinol	5.5	3.6	0	-18	0	60	20
	11	7.2	0	-36	0	>100	50

Responses listed are changes from tap water baseline.
TOC full scale ≡ 10 ppm carbon.
UV absorption full scale ≡ 5 mV output.
* Sufficient time was not allowed for full response to develop before next addition.
** Benzene added in the form of one liter of saturated solution.

resorcinol, the response of the TOC analyzer (calibrated to measure 10 ppm carbon at full scale) was nearly quantitative. For volatile, water-insoluble compounds, the response is noticeably less because the sparging treatment to which the sample is subjected removes a considerable fraction of the material before it is injected into the furnace. Even with this drawback, however, benzene and chloroform do not escape detection when present in large concentration.

One facet of the laboratory evaluation consisted of running the entire system continuously for as long as possible. A 19-day period of continuous operation was achieved with only minor interruptions, which it should now be possible to improve upon since various parts of the system have been upgraded. This continuous run was terminated because of a serious failure of the homogenizer. The ceramic stator separated from its mount, fell against the rotor, and a large quantity of abrasive fines was produced. The fines plugged the downstream lines, necessitating dismantling and cleanout. The homogenizer was returned to the manufacturer for repair and since its return it has operated satisfactorily.

TRAILER MOUNTING

Following the laboratory evaluation phase, the components of the warning system were mounted in an 8.2-m (27-foot) automotive trailer for increased mobility. The custom-built trailer was provided with inlet and outlet for the water sample, and large integral eye bolts to which tiedowns could be attached for holding the major components in place during transport. The central (uv) console is permanently in position in the trailer attached to the plastic inlet and outlet lines. The control console is placed in the aft corner of the trailer with Ethafoam padding protecting it from damage, and several tiedowns keep the console in position. The Dohrmann DC-60 TOC Analyzer is placed on a custom-built pad and also tied down for transport. Connections between the TOC Analyzer and the rest of the system are undone to simplify moving from one site to another. The mounting arrangements have been demonstrated to be adequate for several short moves of the warning system from one site to another, and for transcontinental shipment as well.

FIELD TESTING OF THE HAZARDOUS MATERIALS SPILL WARNING SYSTEM AT THE ROCKETDYNE SANTA SUSANA FIELD LABORATORY

The hazardous material spill warning system trailer was moved to the Rocketdyne Santa Susana Field Laboratory (SSFL) in March 1977. It was located at the Alfa I Test Stand flame deflector channel, about 15 m (50 feet) from a creek bed. The submersible pump was placed in the creek after first rechanneling the creek to accommodate it. Thirty m (100 feet) of 5-cm (2-inch) reinforced PVC tubing connected the pump to the trailer and an additional 30 m (100 feet) of tubing returned the effluent to the creek downstream of the pump. A right-angle, sharp-crested weir was installed 100 m (390 feet) upstream of the pump to permit determination of the stream flowrate.

Water to the creek bed was provided by "natural runoff" from a set of sprinklers hooked up to the SSFL water reclamation system. The water from the sprinklers flowed approximately 100 m (390 feet) down a hillside containing

vegetation indigenous to the area and then entered the stream 100 m (390 feet) upstream of the weir.

The warning system equipment consoles and associated gear, which had been anchored securely for the trip, were untied and reconnected in the usual operational configuration prior to engaging the system. In a logical, stepwise fashion, the warning system modules and various subsystems were activated, checked out, and placed on stream. With the SSFL water reclamation sprinklers running and the stream flowing at flowrates up to 240 L (63 gallons) per minute (measured at the weir), the submersible pump was engaged and system mainstream flow was obtained. Mainstream flow, which is monitored by ORP, pH, and conductivity sensors, was held at 20 to 22 L (5.3 to 5.8 gallons) per minute. Flow to the uv absorptimeter and the TOCA was held at 1.1 L (.29 gallon) per minute and was obtained by opening the valves to the small-bore tubing after the homogenizer was engaged.

With flow in these small-bore lines and with the TOCA furnace cooling water pump operating, the uv absorptimeter and the TOCA were turned on. The respective readouts appeared normal, except for the conductivity, which was off scale, apparently because of the high specific conductivity of the stream. The original conductivity cell, therefore, was replaced with a higher cell-constant conductivity cell.

All of the sensor alarm cams and alarm pots required readjustment from the laboratory tap water settings to the new "natural" waterway conditions. The only sensors that were calibrated in situ with standard solutions during field trials at SSFL were the conductivity, TOC, and uv absorptimeter. The reason for this was that only these sensors had been modified after all the sensors had been originally calibrated in the laboratory using standard solutions. (The conductivity system was modified by the exchange of conductivity cells, the TOCA by its being used in the "HI OPER" range position rather than the original "LO OPER" mode, and the uv absorptimeter by the replacement of a deuterium lamp, cleaning of cell windows, and the adjusting of circuit board pots.)

The conductivity system was calibrated using KCl solutions of selected specific conductivity. Solutions of 0.01 and 0.02N KCl were prepared and, with specific conductivities at 25°C of 1413 and 2765 μmhos/cm, respectively, produced a calibration constant of 57.5 μmhos/cm/percent full scale with the new, higher cell-constant conductivity cell in the system.

The TOCA was calibrated using a 375-ppm C:KHP solution. The usual procedure involves adjusting a calibration circuit pot so that the TOCA readout for this solution reads 75 percent of full scale. Thus, a full-scale deflection would read 500 ppm. As a result of the calibration, the background reading fell from 30 to 20 ppm carbon.

The uv absorptimeter was calibrated using KHP solutions which were passed through the uv cell and the response measured on the uv recorder. A 50-ppm KHP solution was higher than the full-scale reading, while a 25-ppm solution was close to 50 percent full scale.

With the entire warning system in operation, spills of selected hazardous chemicals were conducted. Spills of resorcinol, hydroxylamine hydrochloride (HAHC), and aluminum sulfate were performed by adding usually 28.4 g of a chemical sample to 500 ml of stream water, stirring the mixture, and then dumping it into the stream approximately 50 m (165 feet) upstream of the submersible pump. The measured changes in response of the various sensors to the spills of these hazardous materials in the stream are listed in Table 11. (Baseline values for each sensor just before the spill are indicated by the value after the slash [/].)

With a weir-measured flowrate of approximately 260 L (70 gallons) per minute, it took 10 minutes for the warning system to first sense the resorcinol spills. Both the uv absorptimeter and the TOCA alarmed with resorcinol. With a weir-measured flowrate of 180 L (48 gallons) per minute, the first response of the warning system to the HAHC and the EDTA occurred after 15 minutes, although the EDTA did not alarm for another 15 minutes. The HAHC alarmed the ORP and affected the pH, while the EDTA alarmed the TOCA. Aluminum sulfate alarmed the pH after 10 minutes at a weir flowrate of 220 L (58 gallons) per minute. In general, the data show that the hazardous materials spill warning system has the capability of responding to a wide variety of compounds within a reasonable period of time. This timely behavior allows the grabbing of a sample of stream water at the time of the alarm so that a representative sample will be available for later chemanalysis.

During the time that the warning system was being field tested at SSFL, a number of improvements were made to the system. The telephone dialer was received and installed in the trailer. It was hooked up to the warning system electronics through two relays connected individually to the first and the second spill warning circuits. The telephone dialer tape was then programmed so that channel A described the first spill and channel B the second.

A Phone-Mate telephone recording device was received and connected to a dedicated telephone line. This device provides the warning system with the capability for taping any incoming telephone-dialer messages so that the operator does not have to be present at a specific telephone station to receive a warning system phone call. In addition, the Phone-Mate has a remote playback feature which permits the operator to call the unit from any telephone and interrogate the device to determine if a spill has occurred. The telephone dialer, coupled with the telephone recorder, provides the hazardous spills warning system with an unparalleled ability for unattended operation.

Further, a gel-cell battery was connected to the telephone dialer as part of a fail-safe capability built into the system. If the 110-volt power fails after an alarm is tripped or if power interruptions occur, the dialer can still operate up to 6 hours on the battery charge.

To prevent the TOCA furnace cooling water pump from cavitating, the plumbing line at the base of the original 1-inch standpipe, which is the water reservoir for the cooling subsystem, was rerouted. The water line now is shorter with fewer bends and does not cross directly over the warm pump motor. Also, the 1-inch-diameter standpipe was replaced with a 1½-inch one, and this greatly improved the cooling capacity of the subsystem.

TABLE 11. CHANGE IN RESPONSE DUE TO STREAM SPILLS OF HAZARDOUS MATERIALS

SPILL MATERIAL	WEIR FLOW-RATE (L/min)	TIME FOR SYSTEM TO ALARM (min)	ORP (% F.S.)†	pH (pH units)	CONDUCTIVITY (% F.S.)†	U.V. (% F.S.)†	TOC (% F.S.)†
Resorcinol	260	-	14/14	8.7/8.6	12/12	100/6	5.5/3
Resorcinol	260	10	13/13	8.8/8.7	12/12	100/10	5.5/3
Resorcinol	260	10	12/13	8.8/8.7	12/12	100/15	8.5/3.5
HAHC	180	15	6/21	7.5/7.9	12/12	4/4	2.5/2.5
EDTA	180	30	9/9	7.9/8.0	12/12	6/6	4/2.5
Resorcinol	180	15	17/17	8.1/8.1	12/12	100/28	2.5/2
Resorcinol	60	25	8/8	7.9/7.9	12/12	>80/14	5.5/3.5
Resorcinol	60	25	8/8	8.0/8.0	12/12	100/14	6/3.5
Resorcinol	60	25	8/8	8.0/8.0	12/12	100/10	6/3.5
Al Sulfate	260	-	27/28	7.0/7.4	10/10	0/0	3/3
EDTA	260	-	28/29	7.2/7.3	11/11	1/0	4/3*
EDTA	220	25	29/28	7.4/7.5	11/11	0/0	4/3*
Al Sulfate†	220	10	26/28	6.6/7.6	11/11	23/0**	4/3
Resorcinol	220	10	25/27	8.1/8.0	11/11	100/1	6/3

All spill samples were prepared in a concentration of 28.4 g per 500 ml of stream water (except † which was prepared in a concentration of 142 g per 500 ml of stream water) and then the mixtures were dumped into the stream 50 m upstream of the submersible pump.

*These changes in TOC value were small because of extremely low TOCA sample flow due to plugging of the first isokinetic flow splitter.

**This response is believed to have been due to some foreign matter which had entered the stream; this can happen since the stream was uncontrolled.

† % F.S. = % Full Scale.

Although a full two-week unattended test run was not actually achieved at the SSFL test site, much valuable information on the practical aspects of operating the system was obtained. This knowledge was collected from testing under conditions considerably more severe and demanding than the system would normally encounter in practice. Since the trailer was located about 100 m (330 feet) from an installation on which rocket engines were periodically test-fired, the warning system was exposed to much higher levels of mechanical shock and vibration than it would normally have to withstand. The system was essentially unaffected by these high vibration levels.

The test firings were preceded and followed by water purges, which introduced much larger volumes of water than usual, upstream of the sampling pump. This large flow loosened debris and silt and piled it around the pump, necessitating temporary removal of the pump and cleaning of the immediate area to maintain proper flow through the warning system. More important, these purges also carried quantities of organic solvent or hydrocarbon fuel. The petroleum fuel was detected by the uv absorptimeter when it was in operation immediately after a purge. This observation constituted the first detection of a spill of a hazardous material by the warning system.

Since each engine firing included several test stand water purges, the stream background readings were continually and dramatically changing on those days when firings were scheduled. For this reason, either an operator would have to be continuously on hand at the trailer to reset the warning system so that it could continue operating uninterruptedly, or the system would have to be placed on standby until the stream perturbation had abated. A number of times the latter course was selected as the more desirable and it was for this reason, especially, that a series of short test periods were obtained rather than the desired uninterrupted two-week test. Of course, hazardous chemical spills probably would not occur in actual practice with such a frequency as they did during the SSFL test trials and, thus, the degree of attention demanded by the warning system in actual field use would be reduced considerably.

FIELD TESTING ON THE LOS ANGELES RIVER

With the cooperation and assistance of the Los Angeles County Flood Control District, Water Quality Section, possible sites for testing the warning system on the Los Angeles River were investigated. Of several possible locations, the one selected (Dominguez pumphouse) provided the best security and a convenient source of power. The trailer was inside a doubly fenced area out of sight of most individuals who might use the flood control channel for recreational purposes, such as bicycling. It was about 80 m (270 feet) from, and 10 m (30 feet) above the watercourse in the middle of the concrete-lined channel.

The depth of the water, about 12 cm (5 inches), was insufficient to cover the submersible pump completely when it lay horizontally in the river. A first attempt to run the warning system under these conditions produced too little flow and pressure to fill the uv cell. Only the Leeds & Northrup module could provide any data. The water characteristics were: pH = 9.0, conductivity = 1490 to 1610 μmho/cm, ORP = 4 percent of full scale. The conductivity was higher than that required to produce an alarm at the preset value of 20 percent full scale.

The following week, the area of the watercourse was sandbagged just downstream of the pump so that the effective water depth in the region of the pump was increased to 18 cm (7 inches). This change produced a nominal water flowrate and pressure at the inlet to the warning system in the trailer, despite the horizontal and vertical distance between the stream and the instruments. The uv absorptimeter was started up after adequate flow was established. The conductivity alarm was reset to 35 percent of full scale (approximately 2000 μmho/cm) and the system was allowed to monitor the stream. After about 1½ hours of stable operation with pH at 9.0, ORP at 2 to 4 percent full scale, conductivity at 1670 μmho/cm, and uv absorption at 0, uv absorption increased rapidly and climbed off scale. This high value of uv absorption was exhibited for more than 40 minutes. During this period, the rezero function operated automatically with water from the river placed in the rezero reservoir before the highly absorbing material passed the sampling site. When the high uv absorption condition persisted, the system was also rezeroed manually to check that the instrument was operating properly. After staying off scale for 45 minutes, the uv trace came back on scale and returned to zero within 5 minutes, showing definitely that a highly absorbing material had passed the sampling point.

The high uv absorption was not accompanied by any significant change in pH, ORP, or conductivity. The TOC content of the grab sample collected was not significantly different from the baseline. However, the uv absorptimeter is more sensitive to certain organic compounds than the TOCA. Therefore, it is certainly possible that some organic compounds, to which the uv analyzer responds strongly, may not affect the TOC noticeably.

Additional field tests were performed by Mason & Hanger, contractor for the EERU. These tests are discussed in Appendix C.

REFERENCES

1. Shackelford, J., and L. Keith. Frequency of Organic Compounds Identified in Water. EPA-600/476-062, U.S. Environmental Protection Agency, Cincinnati, Ohio, 1976.

2. Ciaccio, L.L., et al. Water and Water Pollution Handbook, Vol. 4. Marcel Dekker, Inc., New York, New York, 1973. p. 1488.

3. Lange, N.A. Handbook of Chemistry. McGraw-Hill Book Co., Inc., New York, New York, 1961. 1969 pp.

4. Camp, T.R. Water and Its Impurities. Reinhold Publishing Co., New York, New York, 1963. p. 132.

5. Langmuir, D. E_h-pH Determination. Procedures in Sedimentary Petrology, Robert E. Carver, ed. Wiley-Interscience, New York, New York, 1971. p. 617.

APPENDIX A

INSTRUMENT MANUFACTURERS

At the beginning of the program, when selection of particular instruments had to be started, there was a variety of process-type pH, ORP, and conductivity instruments commercially available. The selection of the Leeds & Northrup instruments was somewhat arbitrary, but conditioned in part by their time-honored reputation in the field of process instruments and the availability of recorders with chart speed that could be increased when a set point was exceeded.

The possible selection of ultraviolet absorptimeter was limited to the two commercially available instruments made by duPont or Teledyne. Of these, the built-in electronic rezero and the possibility of hourly flushing of the uv cell, along with the single beam feature, argued strongly for the Teledyne General Purpose Analyzer. The particular model selected, 611DS2, incorporates a deuterium light source (which makes possible selection of a wider variety of measuring and reference wavelengths than the more common mercury arc source). Reference and measuring wavelengths actually in use are 390 nm and 230 nm respectively.

The most difficult detection component to select was the Total Organic Carbon Analyzer. No completely satisfactory instrument was available. On-line instruments were claimed to be available by Astro Ecology, Delta, Dohrmann and Raytheon. The Astro and Raytheon instruments were continuous instruments. However, both were subject to substantial zero drift that appeared to make them unsuitable for operation for an unattended period of two weeks. The Delta instrument appeared not to be quite ready for delivery within the required time frame. Hence, the Dohrmann Model DC-60 was chosen for the instrument package. Its major shortcoming is that it operates semicontinuously; a sample is injected into the furnace no more frequently than once every 5 minutes. This discontinuous operation, however, leads to certain advantages. Fouling of the furnace may be slower than with the continuously operating instruments. In addition, the Dohrmann instrument employs a more stable nondispersive IR unit for the measurement of the carbon dioxide produced than the other available furnace-type TOC analyzers.

A partial list of manufacturers contacted appears in Table A-1.

TABLE A-1. PARTIAL LIST OF INSTRUMENT MANUFACTURERS CONSULTED

Aquatronics Inc.
4th & Cumberland Streets
Philadelphia, PA 19133
(215)739-0695

Astro Ecology Corporation
P.O. Box 58159
Houston, TX 77058
(713)332-2484

Balsbaugh Laboratories Inc.
25 Industrial Park Road
So. Hingham, MA 02043
(617)749-1860

Beckman Instruments Inc.
2500 Harbor Boulevard
Fullerton, CA 92634
(714)871-4848

Bendix Corporation
Environmental Science Division
1400 Taylor Avenue
Baltimore, MD 21204
(301)825-5200

Buchler Instruments Division
1327 Sixteenth Street
Fort Lee, NJ 07024
(201)224-3333

Chondra Tech Inc.
1053 Shary Circle
Concord, CA 94518
(415)825-4533

Delta Scientific Corp.
120 E. Hoffman Ave.
Lindenhurst, NY 11757
(516)884-4422

Dohrmann Division-Envirotech
3240 Scott Boulevard
Santa Clara, CA 95050
(408)249-6000

E. I. DuPont de Nemours & Co.
Instrument Products Division
Monrovia, CA 91016
(213)357-2111

Ecologic Instrument Corp.
132 Wilbur Place
Bohemia, NY 11716
(516)567-9000

Enviro Control Inc.
960 Thompson Avenue
Rockville, MD 20852
(301)881-2660

Gilson Medical Electronics
3000 West Beltline
Middleton, WI 53562
(608)836-1551

Great Lakes Instruments Inc.
7552 North Teutonia Avenue
Milwaukee, WI 53209
(414)351-1250

Hach Chemical Company
P.O. Box 907
Ames, IA 50010
(515)232-2533

Honeywell Inc.
6620 Telegraph Road
Los Angeles, CA 90040
(213)723-6611

(continued)

TABLE A-1 (continued)

Inter Ocean Systems Inc.
3510 Kurtz St.
San Diego, CA 92110
(714)299-4500

Ionics Instrument Division
65 Grove Street
Watertown, MA 02172
(617)926-2500

Instrumentation Specialties Company
P.O. Box 5347
Lincoln, NE 68505
(402)464-0231

Kernco Instruments Inc.
19 Walt Whitman Road
Huntington Station, NY 11746
(516)427-4354

Leeds and Northrup
1360 S. Anaheim Blvd., Ste 225
Anaheim, CA 92805
(213)924-1647

Martek Instruments Inc.
879 West 16th Street
Newport Beach, CA 92660
(714)645-1170

Montedoro-Whitney Corporation
P.O. Box 1401
San Luis Obispo, CA 93401
(805)543-7337

Raytheon Company
Submarine Signal Division
West Main Street
Portsmouth, RI 02871
(401)847-8000

Technicon Industrial Systems
840 Tenth Street
Manhattan Beach, CA 90266
(213)374-5528

Teledyne Analytical Instruments
333 W. Mission Dr.
San Gabriel, CA 91776
(213)283-7181

Uniloc, Inc.
17401 Armstrong Ave.
Santa Ana, CA 92705
(714)546-8700

Wallace and Tiernan Division
25 Main Street
Belleville, NJ 07109
(201)759-8000

Wesmar Industrial Systems Division
905 Dexter Avenue North
Seattle, WA 98109
(206)285-2420

Weston and Stack Inc.
446 Lancaster Ave.
Malvern, PA 19355
(215)647-2400

APPENDIX B

OPERATING INSTRUCTIONS

INSTALLATION AND INITIAL STARTUP

Check all systems for damage. Lower the trailer jacks and block them so the trailer will be essentially level. Care should be taken when untying the instrument consoles. Remove the tie-downs which hold the consoles in place and put them out of the way in a drawer. Arrange both the control console and the total organic carbon analyzer (TOCA) so they sit side by side with, and face the same direction as, the uv absorptimeter/flow loop console. The uv console remains in place facing toward the trailer doors. (Be careful during arrangement of the consoles not to put any tension on electrical wiring connecting the control console and the uv console.) Anchor the TOCA by lowering the front support bolts.

Additional Equipment Required (to be supplied by user)

1. A 110-volt, 60-cps line capable of delivering 60 amps should be connected to the trailer if there is sufficient power available at the site. As an alternative system, the portable generator installed in the trailer would provide up to 12 hours of operation at nominal power levels with one filling of the gasoline tank (50 L).

2. A phone line will have to be installed for the telephone dialer. (It is important that the operator reprogram the telephone dialer tape to correspond to the new circumstances under which the warning system will be used.)

3. A source of potable water should be available for the personnel using the trailer.

4. The trailer's toilet facilities should be hooked up to onsite disposal facilities. An alternative would be to provide a chemical or other toilet separate from the trailer.

5. A supply of chemicals and reagents should be on hand, including distilled water, potassium acid phthalate (KHP), Zobell solution, hydrochloric acid (HCl), and a biocide.

6. Compressed gases, including oxygen, and 400 ppm CO_2 in N_2, and appropriate pressure regulators are also required.

7. Chart paper for the two L&N recorders and the Dohrmann TOCA recorder should be provided.

8. A dedicated telephone jack for the automatic telephone answerer must be installed at the receiving station.

Service Connections

All instrument console main power switches should be turned off before any power cords are connected.

Submersible Pump/Main Flow

1. Place the submersible pump in the stream. As long as it is completely submerged, it does not matter if it is positioned in a vertical or horizontal attitude.

2. Connect a suitable length of 5-cm (2-inch) PVC tubing to the submersible pump and attach it to the main flow inlet to the trailer. Likewise, attach a similar length of tubing to the trailer main flow outlet and run it to a point downstream of the pump.

3. Uncoil suitable lengths of electrical extension cord to reach from the trailer to the pump and attach to the trailer through outside demand-pump hatch.

4. After checking the main flow valve (A)* and opening it a little, open valve (2)* half way and plug in the power cord to the submersible pump. Observe main pressure gauge (B) while opening valve (A) slowly. Bring pressure up to 20 psig and adjust valve (3) so that main flow measured by flowmeter (9) is 21 L (5.5 gallons) per minute. Check to see that flow is properly exiting return line.

Control Console

Place the first and second spill switches in the "not ready" position, the chart speed switch in the "low" position, and the counter switch "off." (The main power switch to the uv module located on the front panel of the uv control box should be off.) Unplug homogenizer (22) cord from electrical plug-in strip in the rear of the control console.

1. Attach TOCA alarm cable to labelled terminal strip in rear of control console. Connect the wire lugs to terminal positions 4 and 18, numbered from left to right.

2. Plug main control console power cord into nearest wall outlet. The "not-ready" lights should come on.

3. Remove polyethylene sheet pen protectors which have been inserted between pens and chart paper in both L&N recorders.

---

* Numbers and letters in parentheses refer to items so identified in Fig. 4.

4. Turn on each L&N recorder. The switch can be reached by opening recorder door and depressing latch on right front of recorder while carefully pulling chassis out. Do not pull chassis completely out! The power switch is located on the right side toward rear.

TOCA

All external connections are located at the rear of the instrument (41). Make sure master power switch and pump module switch are off.

1. Hook up the TOCA cooling water system located in the rear of the uv console by connecting to the TOCA the two copper lines attached to the two diagonal angle-iron support struts of the uv console. The strut nearest the TOCA contains the cooling water return line and should be connected to the "cooling water out" fitting; the strut farthest from the TOCA contains the cooling water supply line and should be connected to the "cooling water in" fitting. Top off water in TOCA cooling water stand pipe (15) located behind uv absorptimeter front panel.

2. Plug the TOCA main power cord and the TOCA cooling water pump power cord to their nearest respective wall outlet. Check for water flow and leaks in the TOCA cooling water system.

CAUTION

With TOCA main power cord plugged in and TOCA master power switch off, some terminals within the TOCA are HOT! Use care.

3. Turn on TOCA master power switch. Red light should come on. Set cycle interval for 3 hours. (Since the TOCA furnace will be warming up, the operator can periodically monitor furnace temperature by observing meter on TOCA front panel while alternating readout between upper and lower furnace zones by means of front panel switch.)

4. Attach pressure regulator (45) to oxygen K-bottle (44) and then attach copper line from reactant gas fitting at rear of TOCA to the regulator. With regulator set for zero delivery pressure, open main cylinder valve. Set regulator pressure for 40 psig. Observe pressure of 1 to 2 psi on "reaction zone pressure" gauge on pump module front panel. Reactant flowmeter should read approximately 40 mm. Check for proper gas flow through the system by removing right side panel from TOCA and inserting the free end of Tygon tubing from ir analyzer gas outlet into a container with a few centimeters of water. A steady stream of gas bubbles should emerge from the tube.

5. Prepare a 0.5 N HCl solution and place in the 3.8-L (1-gallon) plastic container (43) behind the TOCA. Hook up 3-mm (1/8-inch) Tygon line with special connector to acid inlet at the rear of the TOCA for delivery of acid.

6. Remove air compressor (48) from cabinet and attach air line to rear of TOCA at fitting labelled "compressed air." Plug compressor power cord into appropriate outlet at rear of TOCA. Observe air pressure gauge on pump module front panel to see that pressure holds between 30-40 psig. A pressure relief valve on compressor will relieve pressure above that setting. Verify a setting of approximately 20 mm on the sparge air flowmeter on pump module front panel.

7. Attach copper sample flow line from TOCA overflow device (40) to rear TOCA "sample inlet" connection. The return line consisting of Tygon tubing attaches to a fitting so labelled in the nearest diagonal support strut of the uv console.

UV Absorptimeter Console (Flow Loop)

1. Prop end of absorptimeter ozone transfer tube (exiting right-hand box on front panel) between trailer window and outside screen.

2. Turn on uv absorptimeter master power switch. (This will probably cause a uv alarm signal on control console. Ignore for the time being.) Continue turning switch to start position and release. Being spring-loaded, it will return to "on" position. Check to see if deuterium arc lamp is lit by briefly looking (while wearing plastic safety glasses) through the ozone transfer tube at the top of the right-hand box.

3. Open valve (39) to the TOCA overflow device (40).

4. Plug in homogenizer power cord in rear of main power console.

5. Observe flow to the TOCA overflow device and, thence, to funnel (38) and sump (49). Check to see that float valve (50) is operating properly and water is leaving sump to the eductor (51).

6. Open valve (24) and observe flow to the uv absorption cell (29) by watching outflow to funnel (38).

7. Plug power cord of stirrer (36) for uv rezero fluid reservoir (33) into wall outlet. Leave stirrer switch in off position.

8. Open valve (31) about one and one-half turns.

OPERATION

It is expected that all sensors have been calibrated in accordance with instructions in their individual operating manuals. All alarm settings have been selected based on information developed from field trials conducted by Rocketdyne. However, due to the likelihood of variations in background from one location to another, adjustment of the alarm settings from nominal may be necessary. ORP, pH, and conductivity alarms are adjustable at the cams located within the three-pen L&N recorder. The uv absorption alarm level is controlled by an adjustment pot on the front panel of the uv control box,

while the TOCA alarm is set by an alarm level pot located within the TOCA programmer/integrator module.

1. Switch on stirrer (36). Flip counter switch on front panel of control console to "on" position. Push and release "start" button and then push and release "advance" button until counter advances from 24 to 0. At this point the uv rezero fluid reservoir will start emptying. At appropriate times preset on the respective timers, the reservoir will stop emptying, start filling, add disinfectant, and stop filling. Upon completion of this cycle, the uv absorptimeter will be ready for operation. It will now automatically rezero its baseline once an hour against the reservoir fluid background.

2. Remove right side panel from TOCA. Attach jumper cable between the two wires on top of pump module housing near front of console. This step bypasses the pump module flow interruption, shutdown circuit. Flip pump switch (located on front panel) to "on" position. If flowmeter lights and pumps do not go on, momentarily depress red reset button located just below jumper connections on pump module housing. Observe movement of bubbles through pump tubing and advance of acid solution through tubing to air sparger in rear of pump module. When no further flow discontinuities are observed (usually about 5 minutes after starting pumps), remove jumper cable and replace right side panel to TOCA.

3. Turn TOCA cycle interval switch to 5-minute injection cycle. Set TOCA function switch (pull out programmer/integrator module) to "HI OPER" position and push "program start" button momentarily. Observe that the TOCA rotary injector valve is now following a programmed sequence of commands involving injection of a sample from the flow stream into the TOCA furnace. The TOCA will now operate automatically with injections and readouts occurring once every 5 minutes.

4. Check grab sample bottles (19) and (21) to see that they are empty. Open valve (17) approximately six turns. Check control console to ensure that no alarm condition exists. Push the reset buttons on the alarm panel of the control console and throw the first and second spill switches from "not ready" to "ready." The warning system will now automatically record the responses of the sensors, close alarm circuits if preset alarm levels are exceeded, and grab a sample of the stream fluid if an alarm occurs. (Up to two samples can be grabbed, if there is a discontinuity in the alarm signal after a preset period of time. Such a condition could occur in the event of two separate hazardous material spills, unless the first spill is that of an organic material.)

5. Plug telephone dialer transformer into wall outlet. Open lid to telephone dialer and turn switch to "on" position. The warning system is now ready to automatically call any number(s) and message(s) that have been preprogrammed on the cartridge tape.

6. Connect the telephone recording device to a phone pickup. The device can now receive and record automatically any incoming phone messages, such as those from the telephone dialer. Also, the remote playback feature allows the operator to interrogate the device from another phone.

SYSTEM SHUTDOWN

1. Turn off telephone dialer.

2. Set TOCA cycle interval switch for 3 hours. Turn off TOCA pump module and TOCA master power switches. (Again, the operator can periodically monitor the furnace temperature by observing meter on TOCA front panel.) Unplug air compressor power cord at rear of TOCA. Open the air compressor pressure relief valve by pulling out the spring-loaded red knob for a few seconds until the pressure bleeds down completely.

3. Turn off uv master power switch on front panel of uv control box. Check to see that deuterium lamp is no longer lit.

4. Close valves (39) and (31).

5. Unplug main control console power cord. This will turn off the homogenizer and L&N recorders.

6. Close valve (24). Observe that water flows into funnel (38) have ceased.

7. Insert pen protectors between pens and chart paper in both L&N recorders.

8. Switch off stirrer (36).

9. When the TOCA furnace temperature falls below 400° C the TOCA cooling water pump can be unplugged.

10. Turn off oxygen regulator valve.

11. Unplug electrical extension cord to the submersible pump and then close main flow valve (A).

12. Unplug TOCA power cord. This completes system shutdown.

APPENDIX C

SPILL ALARM SYSTEM REPORT
ENVIRONMENTAL EMERGENCY RESPONSE UNIT

Mason & Hanger - Silas Mason Co., Inc.
Edison, New Jersey 08837

Contract No. 68-03-2647

ABSTRACT

The Spill Alarm System was transferred to the Environmental Emergency Response Unit in November 1977. The initial shakedown consisted of minor repairs and the checkout of individual components. Short-term tests were conducted using specific materials to produce response and alarm from the detection components. A long-term test was set up on Mill Brook at a site adjacent to the Kin-Buc landfill in Edison, New Jersey. The Spill Alarm System was successfully used for emergency field response at Pittston, Pennsylvania, from October 19, 1979, to November 16, 1979.

This report covers a period from January 1978 to and including March 1981.

BACKGROUND

The Spill Alarm System was developed for the U.S. Environmental Protection Agency, Oil and Hazardous Materials Spills Branch, Edison, New Jersey, by the Rocketdyne Division, Rockwell International, Canoga Park, California, under Contract No. 68-03-2080. The system was designed to detect spills of hazardous materials in natural waterways.

The instrument package is installed in a modified air-conditioned 8.2-meter (27-foot) camping trailer. The detection components that have been incorporated into the instrument package are a pH meter, oxidation-reduction potential cell, electrical conductivity cell, ultraviolet adsorptimeter, and total organic carbon analyzer. A strip chart recorder channel with an adjustable alarm sensor is associated with each detection component. Upon detection of a concentration of hazardous material exceeding the alarm level of any of the detection components, an alarm indication is sent via automatic telephone equipment to a designated telephone where the alarm indication is recorded.

SHAKEDOWN

The Spill Alarm Trailer was first tested by the Environmental Emergency Response Unit (EERU) at the U.S. Environmental Protection Agency facility in

Edison, New Jersey. The system was set up for short-term testing by recirculating water from a 208-liter (55-gallon) container. Tests of the individual detection components were made by the addition of known amounts of hazardous materials into the water stream. This method enabled the operator to establish a background zero and note response and alarm of each detection component.

Several problems were encountered during the checkout of the detection components. The peristaltic pumps in the Total Organic Carbon Analyzer malfunctioned and were replaced. An examination of the pumps revealed the lubricant in the gear box had hardened and overheating was suspected of causing the problem. A cooling fan was installed in the unit to improve reliability and prevent overheating of the pumps. Plugging of small lines and tubing caused intermittent flow problems, especially in the sample feed to the ultraviolet absorptimeter cell. Air pressure was used to blow out the plugged line and small pieces of plastic were found to be the cause. After replacing most of the small tubing, the problem was traced to a section of vinyl-lined stainless steel tubing. Erratic operation of the Total Organic Carbon Analyzer was traced to a defective pyrolysis tube requiring replacement of the heating unit and thermocouples. On June 2 the initial checkout was completed and the system was operating satisfactorily. The system was subsequently operated for approximately 2 months with a minimum of attendance.

FIELD TEST

On August 18, 1978, the Spill Alarm System was moved to a site on Mill Brook adjacent to the Kin-Buc landfill in Edison, New Jersey. The system was set up approximately 60 meters (195 feet) from the stream bed. A submersible pump with 2.5-cm (1-inch) vinyl tubing was used to pump the sample water to the Spill Alarm System and return to the stream. Numerous problems were encountered during the 4 months the system was located at the landfill site. The majority of the problems were associated with the Total Organic Carbon Analyzer and the ultraviolet absorptimeter. The water-cooling system on the Total Organic Carbon Analyzer malfunctioned and required replacement. The cooling system had no indicators for the pressure of the water being circulated in the system. A flow meter and pressure gauge were added to the cooling system for visual monitoring of flow and for adjustment of proper operating temperature. The small tubing connected to the ultraviolet cell continued to plug and stop sample flow, causing the system to alarm. This plugging was attributed to solids passing through the homogenizing unit. Subsequent investigation revealed that the abrasive wheel in the homogenizer had fractured and particles of the abrasive wheel were plugging the system tubing. The homogenizer was replaced with a 500-micron cartridge filter to completely remove any solids present in the water sample.

The time frame of 2 weeks unattended operation was never achieved. The alarms received from the system were of a continuous nature and distinction between equipment failure, zero drift, and actual spill were not possible. The results are partially attributed to the parameters of the groundwater runoff and the soils saturated with various organic and inorganic materials present at the test site.

The Spill Alarm System was returned to the EERU facility for winterization and maintenance on December 29, 1978.

FIELD RESPONSE

During the month of October 1979 the services of the Environmental Emergency Response Unit (EERU) were requested in Pittston, Pennsylvania, by EPA Region III, to monitor mine discharge water that was contaminated with a multitude of unknown chemicals and oil.

Oil spills on the Susquehanna River were traced to an abandoned coal mine, locally known as The Old Butler Mine, that discharged from 4 to 12 million gallons of water per day into the Susquehanna. The source of the contamination was suspected to be a chemical salvage company that had been illegally using the old mine as a chemical waste disposal site.

EERU responded on October 19, 1979, with the Spill Alarm trailer and auxiliary equipment. On October 22, 1979, the On-Scene Coordinator (OSC) for EPA Region III requested additional EERU equipment for support operations. The Spill Assessment van and the Mobile Office/Decontamination Trailer were dispatched from Edison and were on site at Butler Mine the following morning. The mine drainage was continually monitored for total organic carbon, uv adsorption, oxidation/reduction potential, pH, and conductivity. The EERU crew and equipment were released by EPA Region III in November 1979.

TECHNICAL REPORT DATA
(Please read Instructions on the reverse before completing)

1. REPORT NO. EPA-600/2-81-212	2.	3. RECIPIENT'S ACCESSION NO.
4. TITLE AND SUBTITLE A Hazardous Materials Spill Warning System		5. REPORT DATE September 1981
		6. PERFORMING ORGANIZATION CODE
7. AUTHOR(S) Milton Kirsch, Robert Melvold, John Vrolyk		8. PERFORMING ORGANIZATION REPORT NO. RI/RD77-263
9. PERFORMING ORGANIZATION NAME AND ADDRESS Rockwell International Corporation Environmental Monitoring & Services Center 2421 W. Hillcrest Drive Newbury Park, California 91320		10. PROGRAM ELEMENT NO.
		11. CONTRACT/GRANT NO. 68-03-2080
12. SPONSORING AGENCY NAME AND ADDRESS Municipal Environmental Research Laboratory-Cin.,OH Office of Research and Development U.S. Environmental Protection Agency Cincinnati, Ohio 45268		13. TYPE OF REPORT AND PERIOD COVERED Final Report (June 74-Dec 78)
		14. SPONSORING AGENCY CODE EPA/600/14

15. SUPPLEMENTARY NOTES

Contact: Ira Wilder (201) 321-6635

16. ABSTRACT

The Environmental Protection Agency has developed a list of materials defined as hazardous substances based on their aquatic toxicity. In addition, certain materials have been designated as "priority pollutants." Often, a spill of toxic materials into a moving water stream can occur without the spiller being aware, or without the spiller notifying authorities. Accordingly, a system was needed to detect the presence of hazardous toxic materials in streams and rivers. This need has been filled by providing a spill alarm system, which was designed, fabricated, and tested prior to delivery. It consists of nonselective detection components which together serve to detect all the materials on the designated hazardous materials list, and the priority pollutants. The system was mounted on an automotive trailer and delivered to the Oil and Hazardous Materials Spills Branch in Edison, New Jersey.

This report was submitted in fulfillment of Contract 68-03-2080 by Rockwell International under the sponsorship of the U.S. Environmental Protection Agency. This report covers the period from June 28, 1974, to December 1, 1978. Rockwell work was completed as of October 1, 1977.

17. KEY WORDS AND DOCUMENT ANALYSIS

a. DESCRIPTORS	b. IDENTIFIERS/OPEN ENDED TERMS	c. COSATI Field/Group
Hazardous Materials Warning Systems Monitors Recording Instruments Design Water	pH Conductivity UV Absorption Total Organic Carbon Analysis Unattended Operation	13B

18. DISTRIBUTION STATEMENT Release to public	19. SECURITY CLASS (This Report) Unclassified	21. NO. OF PAGES 68
	20. SECURITY CLASS (This page) Unclassified	22. PRICE

EPA Form 2220-1 (9-73)