United States
Environmental Protection
Agency

Solid Waste and
Emergency Response
(5305W)

EPA530-R-97-037d
NTIS: PB97-177 455
June 1992

EPA

Background Document for Capacity Analysis for Newly Listed Wastes and Hazardous Debris to Support 40 CFR 268 Land Disposal Restrictions (Final Rule)

Volume 4:
Appendix C - Background Data for Incineration and Cement Kiln Capacity (Part 3)

Information Resources Center
US EPA (3404)
401 M Street, SW
Washington, DC 20460

Printed on paper that contains at lest 20 percent postconsumer fiber

CD2F-50048

NOTICE
If the filmed image is less clear than this Notice it is due to the quality of the document being filmed.

Background Document for Capacity Analysis for Newly Listed Wastes and Hazardous Debris to Support 40 CFR 268 Land Disposal Restrictions (Final Rule)

CD2F 003

Volume 4: Appendix A - Background Data for Incineration and Cement Kiln Capacity (continued)

United States Environmental Protection Agency
Office of Solid Waste
401 M Street, N.W.
Washington, D.C. 20460

0 5 9 1

June 1992

The following information included in EPA's commercial combustion capacity update are included in this document:

Volume 1: Cement Kiln Recycling Coalition surveys

- Ash Grove Cement, Chanute, Kansas
- Ash Grove Cement, Foreman, Arkansas
- Ash Grove Cement, Louisville, Nebraska
- Ash Grove Cement West, Clancy, Montana
- Ash Grove Cement West, Nephi, Utah
- Blue Circle Cement, Atlanta, Georgia
- Blue Circle Cement, Tulsa, Oklahoma
- ESSROC Cement Group, Logansport, Indiana
- ESSROC Cement Group, San Juan, Puerto Rico
- ESSROC Cement Group, Speed, Indiana
- Giant Cement, Harleyville, South Carolina
- Heartland Cement, Independence, Kansas
- Keystone Cement, Bath, Pennsylvania
- Lafarge, Alpena, Michigan
- Lafarge, Demopolis, Alabama
- Lafarge, Fredonia, Kansas

Volume 2: Cement Kiln Recycling Coalition surveys

- Lafarge, Paulding, Ohio
- Lone Star Industries, Greencastle, Indiana
- Medusa Cement, Clinchfield, Georgia
- Medusa Cement, Wampum, Pennsylvania
- National Cement, Lebec, California
- River Cement, Festus, Missouri
- Southdown, Brooksville, Florida
- Southdown, Fairborn, Ohio
- Southdown, Knoxville, Tennessee
- Southdown, Louisville, Kentucky
- Southdown, Odessa, Texas
- Southdown, Pittsburgh, Pennsylvania

Volume 3: Incinerator capacity surveys

- Aptus, Coffeyville, Kansas
- Aptus, Tooele, Utah
- Chemical Waste Management, Chicago, Illinois
- Chemical Waste Management, Port Arthur, Texas
- Chemical Waste Management, Sauget, Illinois
- Rhone-Poulenc, Baton Rouge, Louisiana
- Rhone-Poulenc, Houston, Texas

NOTICE
If the filmed image is less clear than this Notice it is due to the quality of the document being filmed.

CD2F 003

0 5 9 2

Volume 3: Incinerator capacity surveys (continued)

- Rollins, Bridgeport, New Jersey
- Rollins, Baton Rouge, Louisiana
- Rollins, Deer Park, Texas
- Ross, Grafton, Ohio
- ThermalKEM, Rock Hill, South Carolina

Other background information

NOTICE
If the filmed image is less clear than this Notice it is due to the quality of the document being filmed.

CD2F 003

0 5 9 3

Survey Responses Contained in this Document

Volumes 2 and 3: Appendix A contain surveys completed by firms that are connected with fuels substitution, own cement kilns, and act as fuels blenders, regarding the capacity to burn hazardous wastes under regulation since November 1984 ("newly listed" wastes.) The survey was sponsored by the Cement Kiln Recycling Coalition (CKRC), and completed survey forms were returned to EPA to evaluate and incorporate into the Agency's effort to determine the commercial combustion capacity available in May 1992. In addition to requesting information regarding liquid, containerized solid, dry solid, pumpable and nonpumbable sludge hazardous waste fuel combustion capacity of kilns they own or operate, the survey asked respondents about hazardous waste fuel storage capacity and fuels processing capability, the fuels blenders from whom they receive their hazardous waste (if applicable), and the physical and chemical specifications their fuels must meet.

Volume 4: Appendix A contains voluntary capacity update responses from companies that own commercial hazardous waste incinerator facilities. In addition to supplying information regarding their present and future capacity to burn liquids, pumpable sludges, non-pumpable sludges, containerized solids, and bulk solids, the capacity update form included engineering specifications of incinerator unit(s) at facility, debris and soil acceptance criteria, and waste code acceptability. This document also contains facilities that are expected to come on-line by July 1994. EPA contacted appropriate state regulatory agencies to determine the status of those facilities. Telephone logs of conversations clarifying capacity information can be found at the end of this document.

Some facilities requested that all or part of the information they submitted be maintained as Confidential Business Information. Their responses are included in this document, with the confidential information deleted. Their complete responses can be found in the CBI room at EPA headquarters in Washington, D.C.

The data contained in these capacity update responses was used in EPA's capacity analysis as discussed in Chapter 2 of *Background Document for Capacity Analysis for Newly Listed Wastes and Contaminated Debris To Support 40 CFR 268 Land Disposal Restrictions (Final Rule)*.

NOTICE
If the filmed image is less clear than this Notice it is due to the quality of the document being filmed.

CD2F 003

0 5 9 4

NOTICE
If the filmed image is less clear than this Notice it is due to the quality of the document being filmed.

CD2F 003

0595

Incinerator Surveys

NOTICE
If the filmed image is less clear than this Notice it is due to the quality of the document being filmed.

A. Facility Information

1. Respondent Name and Title: Randy Shaner Planning Control Manager

Company: Aptus Coffeyville, Kansas

Phone Number: (800) 292-2550

Fax Number: 316) 251-1095

Name of Caller: Prakash Ramaswamy

Date of Call: July 30, 1991

Time of Call: 9:45 AM EST

2. Number of units currently burning RCRA hazardous waste at this facility: 1

Number of units expected to shutdown by July 1994: 0

Additional units expected to come on line by July 1994: 0

Total number of units expected to burn RCRA hazardous wastes at this at the facility by July 1994: 1

3. Has this facility undergone any physical or regulatory changes in the past 2 years that have changed it's capacity? If so, briefly explain.

Can burn RCRA waste as of July 2, 1991
Aptus has been burning PCB waste. The facility has received a permit to burn RCRA wastes

CD2F 003

0 5 9 6

A. Facility Information (ctd.)

4. What is the current overall utilization of this facility's incineration capacity for following physical forms of waste?

Liquids	_____%
Pumpable Sludges	_____%
Nonpumpable Sludges	_____%
Bulk Solids	_____%
Containerized Solids	_____%
Total	_____%

NOTICE
If the filmed image is less clear than this Notice it is due to the quality of the document being filmed.

CD2F 003

0 5 9 7

B. Permit Issues

1. Have you received a final RCRA Part B permit? If not, when do you expect to receive a RCRA Part B permit?

yes

2. What other permit(s) are required (e.g. NPDES, Air Emission)? By when? What is the current status of these permit(s)?

Air Emission, TSCA permit to burn PCBs.

NOTICE
If the filmed image is less clear than this Notice it is due to the quality of the document being filmed.

CD2F 003

0598

B. Permit Issues (ctd.)

3. What RCRA wastes are currently permitted? If more convenient, please fax list. Are all units authorized for same RCRA codes? If not, please specify RCRA codes accepted for each unit.

Public Information will mail or fax list of waste that can be accepted.

4. Are you adding any waste codes to your permit? Which ones? When do you expect approvals?

Not at this time

5. What types of wastes do you generally reject?

Sending list of unacceptable wastes

NOTICE
If the filmed image is less clear than this Notice it is due to the quality of the document being filmed.

CD2F 003

0599

C. Constituent Limitations/ Maximum Feed Rates

1. Do you accept brominated wastes (e.g., activated alumina containing ethylene dibromide or phenolic polymers containing methyl bromide)? What is your maximum bromine limit (e.g., pounds per hour or maximum concentration in feed)?

Total Halogen Limit is 1000 lbs/hr

Amended 8/1/91 → Bromine limit may be lower if brominated compounds produce problems in the scrubber system

D. Container types that can be Received at the Facility

1. Do you accept liquids, pumpable sludges, nonpumpable sludges, and solids in the following forms?

Container Type	Liquid	Pumpable Sludge	Nonpumpable Sludge	Solid
Lab Pack	✓	✓	✓	✓
Drums (What Sizes?)	✓	✓	✓	✓
Cubic Yard Box				
Cubic Yard Bag				✓
Roll-off			✓	✓
Dumptrailer				✓
Tanker	✓			
Pressure Tanker (Cusco)		(must be able to be [illegible] or pumped in containers only)		
Railcar	✓			✓
Barge				
Other (Specify)				D.O.T. [illegible] containers

NOTICE
If the filmed image is less clear than this Notice it is due to the quality of the document being filmed.

CD2F 003

0600

9. Do you accept debris? Please indicate if you accept the following types of debris, and any limitations or conditions of acceptance.

Hazardous Waste Contaminated Debris Acceptance			
Type of Debris	Accept Now (Y/N)	Plan to Accept By June 94 (Y/N)	Acceptance Conditions (e.g. particle size)
Common Cloth Materials (e.g., rags, mop heads, blankets, or clothing)			
Personal Protection Equipment (e.g., Tyvex suits)			
Paper or Cardboard Materials			
Filter Cartridges			
Wood Materials			
Rubber Objects (e.g., tires, hoses)			
PVC Pipe			
Other Plastic Debris			
Glass Debris			
Ceramic Debris (e.g., semiconductors)			
Metal Objects (e.g., pipes, valves, pumps, nuts and bolts)			
Asbestos Materials (e.g., shingles, insulation)			
Non-Soil Geologic Material (e.g., rocks)			
Concrete Debris			
Refractory Brick			
Other Bricks			
Slag			
Intact Batteries			
Battery Cases			
Electronic Components (e.g., printed circuit boards)			
Electrical Wires, Switches, etc.			

NOTICE
If the filmed image is less clear than this Notice it is due to the quality of the document being filmed.

CD2F 003

0 6 0 1

F. **Incinerator Unit Specific Capacity Sheet**

1. Unit #: [each question in Section F will be addressed for each unit] _____

2. Unit Type: Slagging Rotary Kiln

3. Thermal Rating:(M BTU/ Hour) 61.9

4. Status: Currently Operating (Y/N) ✓ Planned for _____ 19___

If this kiln is currently not operating, please indicate current physical and/or regulatory status (e.g. preparing permit, permit submitted, performing trial burns, kiln under construction).

_____

_____

_____

_____

_____

_____

_____

5. Average operating hours per year accounting for scheduled and unscheduled "down time".
_____ Hours/ Year

NOTICE
If the filmed image is less clear than this Notice it is due to the quality of the document being filmed.

CD2F 003

0 6 0 2

6. Please describe the waste feed mechanisms used to feed RCRA hazardous wastes to this unit.

Liquids:

Direct Injection into [redacted] unit

Pumpable Sludges:

[redacted] must be containerized (see containerized solids)

Nonpumpable Sludges:

must be containerized (see containerized solids)

Containerized Solids:

Ramfeed

NOTICE
If the filmed image is less clear than this Notice it is due to the quality of the document being filmed.

CD2F 003

0 6 0 3

6. Bulk Solids:

Deepfreed

7. Please indicate the RCRA hazardous waste volume burned in this unit, it's permitted capacity, and practical capacity in the table below.

Type of Waste	Amount burned during first 6 months of 1991 (Tons)	Maximum Permitted Waste Capacity (Tons/ Year) or (Pounds/Hour)	Maximum Practical Waste Feed Capacity (Tons/Year) or (Pounds/Hour)
Liquids	0	35,855	
Pumpable Sludges	0		
Nonpumpable Sludges	0	25,000 Tons	
Containerized Solids	0		
Bulk Solids	0		
Total	0	60855	

7a. Were the waste volumes received during the first 6 months of 1991 typical of what you expect to receive over the next year? If not, how do you expect waste volumes to change after the next 6 months? 1 year? (i.e. provide the percentage increase or decrease of each waste form that you anticipate.)

Aplus recently ~~has~~ began accepting RCRA wastes. Acceptance of RCRA vs TSCA will depend on market conditions. For the remainder of the year, RCRA waste is expected to be approx 10% of waste accepted at facility.

NOTICE
If the filmed image is less clear than this Notice it is due to the quality of the document being filmed.

CD2F.003

0 6 0 4

8. Please indicate the amount of RCRA hazardous waste contaminated debris and soil burned and your capacity to burn debris and soil by filling in the table below.

Type of Waste	Amount burned during first 6 months of 1991 (1991)	Maximum Permitted Waste Capacity (Tons/ Year) or (Pounds/ Hour)	Maximum Practical Waste Feed Capacity (Tons/ Year) or (Pounds/Hour)
Debris	0		
Soils	0	Max for soils is. 85,000	Ton/

8a. Are soil volumes and capacities of soil accounted for in the Bulk Solid category of Table #7? If not, what categories do they fall under? Please provide percentages of soil under those categories.

N/A

8b. Are debris volumes and capacities accounted for in the Bulk Solid category of Table #7? If not, what categories do they fall under? Please provide percentages of debris under those categories.

N/A

NOTICE
If the filmed image is less clear than this Notice it is due to the quality of the document being filmed.

CD2F 003

0605

G.

Future Capacity of Commercial Incinerators

1. What other physical changes (e.g., changes to feed systems, storage area) are planned for this facility that will change it's capacity by July, 1994? Describe the change and the resulting change in capacity by waste form (i.e. the increase or decrease by waste form.)

permit modification to expand liquid storage area

2. What other regulatory changes are planned for this facility that will change it's capacity.? Describe the change and the resulting change in capacity by waste form.

none

NOTICE
If the filmed image is less clear than this Notice it is due to the quality of the document being filmed.

CD2F 003

0 6 0 6

G. **Other Factors to Determine Future Capacity of Commercial Incinerators (Ctd.)**

3. Are you prohibited from receiving any RCRA hazardous wastes from <u>any</u> states? If so, which states?

no

4. Are you limited to receiving a maximum amount of RCRA hazardous waste from any states? If so, which states and what is maximum amount?

no

NOTICE
If the filmed image is less clear than this Notice it is due to the quality of the document being filmed.

CD2F 003

0 6 0 7

NOTICE
If the filmed image is less clear than this Notice it is due to the quality of the document being filmed.

CD2F 003

0608

A. Facility Information

1. Respondent Name and Title: Sherla J. Barber, Mgr. Environmental Planning

Company: Aptus

Phone Number: 801 521 9040

Fax Number: 801 521 9009

Name of Caller:

Date of Call: August 12, 1991

Time of Call: 2:00 p.m.

2. Number of units currently burning RCRA hazardous waste at this facility: 0

Number of units expected to shutdown by July 1994: 0

Additional units expected to come on line by July 1994: 1

Total number of units expected to burn RCRA hazardous waste at this at the facility by July 1994: 1

3. Has this facility undergone any physical or regulatory changes in the past 2 years that have changed it's capacity? If so, briefly explain.

Aptus received a RCRA permit on March 20, 1990. The RCRA permit allowed construction of the incinerators and waste storage facilities. The 720 hour shakedown is slated for Nov/Dec 1991, with a trial burn in January 1992.

NOTICE
If the filmed image is less clear than this Notice it is due to the quality of the document being filmed.

4. Facility Information (ctd.)

a. What is the current overall utilization of this facility's incineration capacity for following physical forms of waste?

Liquids	0	%
Pumpable Sludges	0	%
Unpumpable Sludges	0	%
Bulk Solids	0	%
Containerized Solids	0	%
Total	0	%

NOTICE
If the filmed image is less clear than this Notice it is due to the quality of the document being filmed.

B.

Permit Issues

1. Have you received a Final RCRA Part B permit? If not, when do you expect to receive a RCRA Part B permit?

yes 3/30/90

2. What other permit(s) are required (e.g. NPDES, Air Emissions)? By whom? What is the current status of these permit(s)?

We have a permit for short-term operation pending trial burn results verification. The final permit is expected in Aug 1992.
TSCA approval is still outstanding

NOTICE
If the filmed image is less clear than this Notice it is due to the quality of the document being filmed.

Permit Issues (cont.)

2. What RCRA wastes are currently permitted? If more convenient, please fax list. Are all units authorized for same RCRA codes? If not, please specify RCRA codes accepted for each unit.

All RCRA codes EXCEPT K044; K045; K047; K064; K065; K066; K088; K090; K091; P006; P009; P065; P081; P112; U006; U020; U023; U033; U096; U133; U160; U189; U234

4. Are you adding any waste codes to your permit? Which ones? When do you expect approvals?

yes F032, F033, F034 F037 F038.

90 days from September ~~1, 1990~~ 1991

5. What types of wastes do you generally reject?

~~Very likely except for those requiring special handling. Acids, bases, etc. values~~

~~Radioactives, DOT A & B explosives,~~ Water reactives, except in lab packs, pyrophorics, Shock sensitives, Compressed Gases,

C. Constituent Limitations/ Maximum Feed Rates

1. Do you accept brominated wastes (e.g., activated alumina containing ethylene dibromide or phenolic polymers containing methyl bromide)? What is your maximum bromine limit (e.g., pounds per hour or maximum concentration in feed)?

yes. ~~[illegible]~~ 4100 lb/hr

D. Container types that can be received at the facility

1. Do you accept liquids, pumpable sludges, nonpumpable sludges, and solids in the following forms?

Container Type	Liquid	Pumpable Sludge	Nonpumpable Sludge	Solid
Lab Pack				
Drums (What Sizes?) all DOT sizes +85gal	✓	✓	✓	✓
Cubic Yard Box		✓	✓	✓
Cubic Yard Bag		✓	✓	✓
Roll-off		✓	✓	✓
Dumpcraflex		✓	✓	✓
Tanker	✓			
Pressure Tanker (Dumps)	✓			
Railcar				
Barge				
Other (Specify)				

direct feed

NOTICE
If the filmed image is less clear than this Notice it is due to the quality of the document being filmed.

CD2F 003

0 6 1 2

9. Do you accept debris? Please indicate if you accept the following types of debris, and any limitations or conditions of acceptance.

Hazardous Waste Contaminated Debris Acceptance			
Type of Debris	Accept Now (Y/N)	Plan to Accept By June 94 (Y/N)	Acceptance Conditions (e.g. particle size)
Common Clerk Materials (e.g. rags, mop heads, blankets, or clothing)	Y	Y	none (no restrictions)
Personal Protection Equipment (e.g. Tyvec suits)	Y	Y	no restrictions
Paper or Cardboard Materials	Y	Y	"
Filter Cartridges	Y	Y	"
Wood Materials	Y	Y	"
Rubber Objects (e.g. tires, hoses)	limited	limited	times slipping, tires don't work well together
PVC Pipe	Y	Y	no restrictions
Other Plastic Debris	Y	Y	"
Glass Debris	Y	Y	"
Ceramic Debris (e.g. semiconductors)	Y	Y	"
Metal Objects (e.g. pipes, valves, pumps, tools and tools)	Y	Y	Must be shreddable
Asbestos Materials (e.g. shingles, insulation)	N	N	
Non-Soil Ecologic Material (e.g. weeds)	Y	Y	Must be grindable to minimum - must be shreddable
Concrete Debris	Y	Y	" "
Refractory Brick	N	N	
Other Bricks	N	N	
Slag	N	N	
Metal Barrels	N	N	
Battery Cases	N	N	
Electronic Components (e.g. printed circuit boards)	Y	Y	Must be shreddable
Electrical Wires, Switches, etc.	Y	Y	" "

NOTICE
If the filmed image is less clear than this Notice it is due to the quality of the document being filmed.

10. Please explain any debris acceptance conditions noted on the Table #9.

Must be shreddable. We pick up debris w/ a 2 yd³ clamshell to a shredder hopper. All "rock" will come out as "rock" and we send off-site to a commercial landfill — thus no net advantage of incinerating rock unless organic material is mixed in

11. Do you accept soils? If so, under what conditions or limitations?

Yes. No particular restrictions

NOTICE
If the filmed image is less clear than this Notice it is due to the quality of the document being filmed.

CD2F 003

0 6 1 4

V.

Incinerator Unit Specific Capacity Sheet

1. Unit #: (each question in Section P will be addressed for each unit)

2. Unit Type: slagging rotary kiln w/ after-burner chamber

3. Thermal Rating: (M BTU/ Hour) 120 mm Btu/hr combined

4. Status: Currently Operating (Y/N) N Planned for Mo/Yr 1991

If this kiln is currently not operating, please indicate current physical and/or regulatory status (e.g. preparing permit, permit submitted, performing trial burns, kiln under construction).

Trial burn plan is in the class 3 modification process. Trial burn ~~[illegible]~~ is tentative for Jan 1992. 720 hour shakedown is Nov/Dec 91

5. Average operating hours per year accounting for scheduled and unscheduled "down time". 7,760 Hours/ Year

NOTICE
If the filmed image is less clear than this Notice it is due to the quality of the document being filmed.

6. Please describe the waste feed mechanisms used to feed RCRA hazardous wastes to this unit.

Liquids:

a) From 400,000 gal liquid tank farm to kiln: ABC 90 lb/min capacity
b) Direct burn vessel to front wall - 6 gal/min
c) Aqueous waste to kiln: abc - 60 lb/min capacity

Pumpable Sludges:

35,000 gal sludge tanks pumped via cement type pump through 4" line to kiln front wall. Material is extruded to the kiln

Nonpumpable Sludges:

Fed via clamshell or container and roll to the kiln front wall

Contaminated Solids:

Fed from 1240 yd³ tanks via clamshell to apron feeder to kiln front wall. Solids can be shredded as shredder is in the bulk solids building. Solids in drums can be fed via kiln front wall elevator.

NOTICE
If the filmed image is less clear than this Notice it is due to the quality of the document being filmed.

6. Bulk Solids:

Placed in 1200 yd³ bulk solids tank farm (3 tanks 2-570 yd³ & 1-200 yd³). Can be shredded before moved by clamshell to screw feeder to kiln front will feed chute.

7. Please indicate the RCRA hazardous waste volume burned to this unit, its permitted capacity, and practical capacity in the table below.

Type of Waste	Amount burned during first 6 months of 1991 (Tons)	Maximum Permitted Waste Capacity (Tons/Year) or (Pounds/Hour)	Maximum Practical Waste Feed Capacity (Tons/Year) or (Pounds/Hour)
Liquids	0	16,200	12,000
Pumpable Sludges	0	10,000 lbs/hr	
Nonpumpable Sludges	0	4,000 lbs/hr	4,000 lbs
Containerized Solids	0	12,000 lbs/hr	
Bulk Solids	0	10,000 lbs/hr	
Total		58,200 lbs/hr	28,000 lbs/hr

depends on Trial Burn Results

7a. Were the waste volumes received during the first 6 months of 1991 typical of what you expect to receive over the next year? If not, how do you expect waste volumes to change after the next 6 months? 1 year? (i.e. provide the percentage increase or decrease of each waste form that you anticipate.)

a typo - we are in starting bringing on one storage type at a time. we expect bulk solids & drums to increase dramatically. high Btu liquids will decrease.

NOTICE
If the filmed image is less clear than this Notice it is due to the quality of the document being filmed.

8. Please indicate the amount of RCRA hazardous waste contaminated debris and soil burned and your capacity to burn debris and soil by filling in the table below.

Type of Waste	Amount burned during first 6 months of 1991 (1991)	Maximum Permitted Waste Capacity (Tons/ Year) or (Pounds/Hour)	Maximum Practical Waste Feed Capacity (Tons/ Year) or (Pounds/Hour)
Debris	-0-	16,000 lbs/hr	
Soils	-0-	16,000 lbs/hr	

> 16,000

8a. Are soil volumes and capacities of soil accounted for in the Bulk Solid category of Table #7? If not, what categories do they fall under? Please provide percentages of soil under those categories.

Bulk Solids can all be soil - could be 100%

8b. Are debris volumes and capacities accounted for in the Bulk Solid category of Table #7? If not, what categories do they fall under? Please provide percentages of debris under those categories.

Bulk Solid can all be debris - could be 100%

NOTICE
If the filmed image is less clear than this Notice it is due to the quality of the document being filmed.

G.

Future Capacity of Commercial Incinerators

1. What other physical changes (e.g., changes to feed systems, storage area) are planned for this facility that will change it's capacity by July, 1994? Describe the change and the resulting change in capacity by waste form (i.e. the increase or decrease by waste form.)

May add one more sludge tank at 30,000 gal. Too soon to tell on storages

2. What other regulatory changes are planned for this facility that will change it's capacity? Describe the change and the resulting change in capacity by waste form.

Are permitted to use 120,000 gal liquids. Market trend of liquids, i.e., cement kilns staying out of hazardous waste incineration would make us a million product

NOTICE
If the filmed image is less clear than this Notice it is due to the quality of the document being filmed.

CD2F 003

0619

G. Other Factors to Determine Future Capacity of Commercial Incinerators (Cont.)

3. Are you prohibited from receiving any RCRA hazardous wastes from any states? If so, which states?

No

4. Are you limited to receiving a maximum amount of RCRA hazardous waste from any states? If so, which states and what is maximum amount?

No

NOTICE
If the filmed image is less clear than this Notice it is due to the quality of the document being filmed.

CD2F 003

0290

Chicago Illinois

NOTICE
If the filmed image is less clear than this Notice it is due to the quality of the document being filmed.

A. **Facility Information**

1. Respondent Name and Title: Rudy Vingris - Marketing Manager

   Company: Chemical Waste Management

   Phone Number: (708) 215-1618

   Fax Number: (708) 215-1528

   Name of Caller: _____

   Date of Call: _____

   Time of Call: _____

2. Number of units currently burning RCRA hazardous waste at this facility: 1

   Number of units expected to shutdown by July 1994: 1

   Additional units expected to come on line by July 1994: 0

   Total number of units expected to burn RCRA hazardous wastes at this at the facility by July 1994: 1

3. Has this facility undergone any physical or regulatory changes in the past 2 years that have changed it's capacity? If so, briefly explain.

   No

CD2F 003

0 6 2 1

A. Facility Information (ctd.)

4. What is the current overall utilization of this facility's incineration capacity for following physical forms of waste? CBI

Liquids	_____%
Pumpable Sludges	_____%
Nonpumpable Sludges	_____%
Bulk Solids	_____%
Containerized Solids	_____%
Total	_____%

NOTICE
If the filmed image is less clear than this Notice it is due to the quality of the document being filmed.

CD2F 003

0 6 2 2

B. Permit Issues

1. Have you received a final RCRA Part B permit? If not, when do you expect to receive a RCRA Part B permit?

In September 1989 Part B application was denied. Appeal was made before the Illinois Pollution Control Board.
Hearing is scheduled for October 1991

2. What other permit(s) are required (e.g. NPDES, Air Emission)? By when? What is the current status of these permit(s)?

(1) USEPA Region 5 Interim Status acknowledged 3/10/80
(2) Region 5 approval to incinerate PCBs received 9/83 - no expiration date
(3) Illinois Dept. of Nuclear Safety License for GC detectors - expires 3/31/95
(4) IEPA Division of Land Pollution OP # 1981-046-OP - no expiration
(5) IEPA Division of Land Pollution # 0316000058 - no expiration
(6) IEPA Division of Air Pollution Control # 031600AGG7 - expires [illegible]
(7) Illinois Int'l Port Authority to Conduct Business
(8) City of Chicago Fuel Oil Storer Permit
(9) City of Chicago Flammable Liquid Storage Permit
(10) City of Chicago Liquid Waste Handling Facility Permit
(11) City of Chicago Certificate of Operation issued upon [illegible]
(12) MWRDGC Sewer Permit # 74-325
(13) MWRDGC Connection Permit # 81-CH-05 with waiver # 26197218

NOTICE
If the filmed image is less clear than this Notice it is due to the quality of the document being filmed.

CD2F 003

0 6 2 3

B. Permit Issues (ctd.)

3. What RCRA wastes are currently permitted? If more convenient, please fax list. Are all units authorized for same RCRA codes? If not, please specify RCRA codes accepted for each unit.

Currently, CWM-CS is negotiating a revised waste analysis plan that will affect to a greater extent, what RCRA waste is permitted.
Once negotiations have been finalized (~January 1992), CWM-CS will be able to provide this information.

4. Are you adding any waste codes to your permit? Which ones? When do you expect approvals?

N/A

5. What types of wastes do you generally reject?

NRC regulated radioactive wastes, wastes prohibited from land disposal, explosive wastes, shock sensitive waste asbestos, dioxin contaminated materials, flash point <100°F(%) - consent decree certain mercury contain wastes -

NOTICE
If the filmed image is less clear than this Notice it is due to the quality of the document being filmed.

CD2F 003

0624

C. Constituent Limitations/ Maximum Feed Rates

1. Do you accept brominated wastes (e.g., activated alumina containing ethylene dibromide or phenolic polymers containing methyl bromide)? What is your maximum bromine limit (e.g., pounds per hour or maximum concentration in feed)?

Yes, in limited quantities - 5-10000 lbs per year

D. Container types that can be Received at the Facility

1. Do you accept liquids, pumpable sludges, nonpumpable sludges, and solids in the following forms?

Container Type	Liquid	Pumpable Sludge	Nonpumpable Sludge	Solid
Lab Pack	No	No	No	Yes
Drums (What Sizes?)	No	30 gal. Poly	30 gal. Poly	All sizes
Cubic Yard Box	No	No	No	No
Cubic Yard Bag	No	No	No	No
Roll-off	No	No	No	No
Dumptrailer	No	No	No	No
Tanker	Yes	No	No	No
Pressure Tanker (Cusco)	Yes	No	No	No
Railcar	Yes	No	No	No
Barge	No	No	No	No
Other (Specify)				
Steel Drums	Yes	Yes	Yes	Yes

NOTICE
If the filmed image is less clear than this Notice it is due to the quality of the document being filmed.

CD2F 003

0 0 2 5

9. Do you accept debris? Please indicate if you accept the following types of debris, and any limitations or conditions of acceptance.

Hazardous Waste Contaminated Debris Acceptance			
Type of Debris	Accept Now (Y/N)	Plan to Accept By June 94 (Y/N)	Acceptance Conditions (e.g. particle size)
Common Cloth Materials (e.g., rags, mop heads, blankets, or clothing)	Y	Y	Must be Containerized
Personal Protection Equipment (e.g., Tyvex suits)	Y	Y	Must be Containerized
Paper or Cardboard Materials	Y	Y	Must be Containerized
Filter Cartridges	Y	Y	must be Containerized
Wood Materials	Y	Y	must be Containerized
Rubber Objects (e.g., tires, hoses)	Y	Y	must be Containerized
PVC Pipe	Y	Y	must be Containerized
Other Plastic Debris	Y	Y	Must be Containerized
Glass Debris	Y	Y	Must be Containerized
Ceramic Debris (e.g., semiconductors)	N	N	
Metal Objects (e.g., pipes, valves, pumps, nuts and bolts)	Y	Y	must be Containerized
Asbestos Materials (e.g., shingles, insulation)	N	N	
Non-Soil Geologic Material (e.g., rocks)	Y	Y	Must be Containerized
Concrete Debris	N	N	
Refractory Brick	N	N	
Other Bricks	N	N	
Slag	N	N	
Intact Batteries	N	N	
Battery Cases	N	N	
Electronic Components (e.g., printed circuit boards)	Y	Y	Must be Containerized
Electrical Wires, Switches, etc.	Y	Y	must be Containerized

NOTICE
If the filmed image is less clear than this Notice it is due to the quality of the document being filmed.

CD2F 003

0 6 2 6

10. Please explain any debris acceptance conditions noted on the Table #9.

All debris must not have a physical dimension greater than one foot. Debris is reviewed on a case-by-case basis due to its wide variance in physical and chemical nature.

11. Do you accept soils? If so, under what conditions or limitations?

Soils are accepted on a limited basis and must be delivered in fiber or plastic drums not exceeding 250 lbs. each.

NOTICE
If the filmed image is less clear than this Notice it is due to the quality of the document being filmed.

CD2F 003

0 6 2 1

F. **Incinerator Unit Specific Capacity Sheet**

1. Unit #: [each question in Section F will be addressed for each unit]

2. Unit Type: Rotary Kiln secondary combustion chamber

3. Thermal Rating:(M BTU/ Hour) 120 MBtu/hour

4. Status: Currently Operating (Y/N) N Planned for _____ 19___

If this kiln is currently not operating, please indicate current physical and/or regulatory status (e.g. preparing permit, permit submitted, performing trial burns, kiln under construction).

CWM-CS has been shut down since February 14, 1991. Start-up is dependent upon successful trial burn and final renegotiated WAP. As of September 19, 1991, CWM-CS is still shut down.

5. Average operating hours per year accounting for scheduled and unscheduled "down time".
CBI Hours/ Year

NOTICE
If the filmed image is less clear than this Notice it is due to the quality of the document being filmed.

CD2F 003

0628

6. Please describe the waste feed mechanisms used to feed RCRA hazardous wastes to this unit.

Liquids:

Drums decant or bulk tank truck unloading to bulk storage tanks. Transfer from storage tanks to blending tanks. Transfer from blending tank to incinerators and injection via atomizer.

Pumpable Sludges:

Not accepted

Nonpumpable Sludges:

Drum conveyor transfers drums to airtight charging box. Ram feeds containers to the incinerators' primary chamber.

Containerized Solids:

Drum conveyor transfers drums to airtight charging box. Ram feeds containers to the incinerators' primary chamber

NOTICE
If the filmed image is less clear than this Notice it is due to the quality of the document being filmed.

CD2F 003

0 6 2 9

6. Bulk Solids:

Not applicable

7. Please indicate the RCRA hazardous waste volume burned in this unit, it's permitted capacity, and practical capacity in the table below. CBI

Type of Waste	Amount burned during first 6 months of 1991 (Tons)	Maximum Permitted Waste Capacity (Tons/ Year) or (Pounds/Hour)	Maximum Practical Waste Feed Capacity (Tons/Year) or (Pounds/Hour)
Liquids			
Pumpable Sludges			
Nonpumpable Sludges			
Containerized Solids			
Bulk Solids			
Total			

7a. Were the waste volumes received during the first 6 months of 1991 typical of what you expect to receive over the next year? If not, how do you expect waste volumes to change after the next 6 months? 1 year? (i.e. provide the percentage increase or decrease of each waste form that you anticipate.)

CBI

NOTICE
If the filmed image is less clear than this Notice it is due to the quality of the document being filmed.

CD2F 003

0 6 3 0

8. Please indicate the amount of RCRA hazardous waste contaminated debris and soil burned and your capacity to burn debris and soil by filling in the table below. CBI

Type of Waste	Amount burned during first 6 months of 1991 (1991)	Maximum Permitted Waste Capacity (Tons/ Year) or (Pounds/ Hour)	Maximum Practical Waste Feed Capacity (Tons/ Year) or (Pounds/Hour)
Debris			
Soils			

8a. Are soil volumes and capacities of soil accounted for in the Bulk Solid category of Table #7? If not, what categories do they fall under? Please provide percentages of soil under those categories.

CBI

8b. Are debris volumes and capacities accounted for in the Bulk Solid category of Table #7? If not, what categories do they fall under? Please provide percentages of debris under those categories.

CBI

NOTICE
If the filmed image is less clear than this Notice it is due to the quality of the document being filmed.

CD2F 003

0 6 3 1

G.

Future Capacity of Commercial Incinerators

1. What other physical changes (e.g., changes to feed systems, storage area) are planned for this facility that will change it's capacity by July, 1994? Describe the change and the resulting change in capacity by waste form (i.e. the increase or decrease by waste form.)

Changes in capacity will be greatly effected by the planned trial burn and renegotiated WAP.

2. What other regulatory changes are planned for this facility that will change it's capacity.? Describe the change and the resulting change in capacity by waste form.

Negotiations are in process, therefore, other regulatory changes are not predictable now.

NOTICE
If the filmed image is less clear than this Notice it is due to the quality of the document being filmed.

CD2F 003

0632

G. **Other Factors to Determine Future Capacity of Commercial Incinerators (Ctd.)**

3. Are you prohibited from receiving any RCRA hazardous wastes from <u>any</u> states? If so, which states?

No

4. Are you limited to receiving a maximum amount of RCRA hazardous waste from any states? If so, which states and what is maximum amount?

No

NOTICE
If the filmed image is less clear than this Notice it is due to the quality of the document being filmed.

CD2F 003

0 6 9 3

Port Arthur, Texas

A. **Facility Information**

1. Respondent Name and Title: Rudy Diegers

Company: Chemical Waste Management

Phone Number: (708) 318-1615

Fax Number: (708) 318-1522

Name of Caller:

Date of Call:

Time of Call:

2. Number of units currently burning RCRA hazardous waste at this facility: 1

Number of units expected to shutdown by July 1994: 0

Additional units expected to come on line by July 1994: 0

Total number of units expected to burn RCRA hazardous wastes at this at the facility by July 1994: 1

3. Has this facility undergone any physical or regulatory changes in the past 2 years that have changed it's capacity? If so, briefly explain.

Yes - the incinerator at Port Arthur is new and started operation in 1990. Several permit modifications have been issued primarily relating to operating parameters.

NOTICE
If the filmed image is less clear than this Notice it is due to the quality of the document being filmed.

CD2F 003

0 6 3 4

A. Facility Information (ctd.)

4. What is the current overall utilization of this facility's incineration capacity for following physical forms of waste? CBI

Liquids	_____%
Pumpable Sludges	_____%
Nonpumpable Sludges	_____%
Bulk Solids	_____%
Containerized Solids	_____%
Total	_____%

NOTICE
If the filmed image is less clear than this Notice it is due to the quality of the document being filmed.

CD2F 003

0 6 3 5

B. **Permit Issues**

1. **Have you received a final RCRA Part B permit? If not, when do you expect to receive a RCRA Part B permit?**

Yes 6/7/89
Amended for stabilization 6/6/90
Amended for trial burn 2/22/91

2. **What other permit(s) are required (e.g. NPDES, Air Emission)? By when? What is the current status of these permit(s)?**

Deepwell - issued 9/-/79
- Renewal application 10/17/89 (expect issuance first quarter 1992)
- No migration petition issued 5/3/90
• NPDES - issued 6/17/91. Draft renewal 12/17/89
• TSCA - expect issuance in first quarter 1992.
• Above grade - landfill permit - expect issuance first quarter of 1992.

NOTICE
If the filmed image is less clear than this Notice it is due to the quality of the document being filmed.

CD2F 003

0 6 3 6

B. Permit Issues (ctd.)

3. What RCRA wastes are currently permitted? If more convenient, please fax list. Are all units authorized for same RCRA codes? If not, please specify RCRA codes accepted for each unit.

See attached list of waste codes

4. Are you adding any waste codes to your permit? Which ones? When do you expect approvals?

The following waste codes have been added to the RCRA permit recently: TC codes (D018-D043), F025, F032, F037, F038, and F039

5. What types of wastes do you generally reject?

The following wastes are prohibited: radioactive, dioxin, explosive under 49 CFR 173, municipal garbage, infectious wastes and containerized gaseous waste. Physical types of wastes generally rejected: Bulk solids that are sloppy, free liquids, incompatible liquids/sludges, containers that are very volatile / > 20 mm Btu/charge.

NOTICE
If the filmed image is less clear than this Notice, it is due to the quality of the document being filmed.

CD2F 003

0 6 6 7 7

PT Arthur

(HW 50212 - 001)

EPA HAZARDOUS WASTES CODES Accepted

D001,
D002, D003, D004, D005, D006, D007, D008, D009, D010, D011, D012,
D013, D014, D015, D016, D017, D018 -D043 (Inclusive)

F001, F002, F003, F004, F005, F006, F007, F008, F009, F010, F011,
F012, F019, F024, F025, F032, F037, F038, F039

K001, K002, K003, K004, K005, K006, K007, K008, K009, K010, K011,
K013, K014, K015, K016, K017, K018, K019, K020, K021, K022, K023,
K024, K025, K026, K027, K028, K029, K030, K031, K032, K033, K034,
K035, K036, K037, K038, K039, K040, K041, K042, K043, K044, K045,
K046, K047, K048, K049, K050, K051, K052, K060, K061, K062, K064,
K065, K066, K069, K071, K073, K083, K084, K085, K086, K087, K088,
K090, K091, K093, K094, K095, K096, K097, K098, K099, K100, K101,
K102, K103, K104, K105, K106, K107, K108, K109, K110, K111, K112,
K113, K114, K115, K116, K117, K118, K123, K124, K125, K126, K131,
K132, K136, K137, K138

P001, P002, P003, P004, P005, P006, P007, P008, P009, P010, P011,
P012, P013, P014, P015, P016, P017, P018, P020, P021, P022, P023,
P024, P026, P027, P028, P029, P030, P031, P033, P034, P036, P037,
P038, P039, P040, P041, P042, P043, P044, P045, P046, P047, P048,
P049, P050, P051, P054, P056, P057, P058, P059, P060, P062, P063,
P064, P065, P066, P067, P068, P069, P070, P071, P072, P073, P074,
P075, P076, P077, P078, P081, P082, P084, P085, P087, P088, P089,
P092, P093, P094, P095, P096, P097, P098, P099, P101, P102, P103,
P104, P105, P106, P107, P108, P109, P110, P111, P112, P113, P114,
P115, P116, P118, P119, P120, P121, P122, P123

U001, U002, U003, U004, U005, U006, U007, U008, U009, U010, U011,
U012, U014, U015, U016, U017, U018, U019, U020, U021, U022, U023,
U024, U025, U026, U027, U028, U029, U030, U031, U032, U033, U034,
U035, U036, U037, U038, U039, U041, U042, U043, U044, U045, U046,
U047, U048, U049, U050, U051, U052, U053, U055, U056, U057, U058,
U059, U060, U061, U062, U063, U064, U066, U067, U068, U069, U070,
U071, U072, U073, U074, U075, U076, U077, U078, U079, U080, U081,
U082, U083, U084, U085, U086, U087, U088, U089, U090, U091, U092,
U093, U094, U095, U096, U097, U098, U099, U101, U102, U103, U105,
U106, U107, U108, U109, U110, U111, U112, U113, U114, U115, U116,
U117, U118, U119, U120, U121, U122, U123, U124, U125, U126, U127,
U128, U129, U130, U131, U132, U133, U134, U135, U136, U137, U138,
U139, U140, U141, U142, U143, U144, U145, U146, U147, U148, U149,
U150, U151, U152, U153, U154, U155, U156, U157, U158, U159, U160,
U161, U162, U163, U164, U165, U166, U167, U168, U169, U170, U171,
U172, U173, U174, U176, U177, U178, U179, U180, U181, U182, U183,
U184, U185, U186, U187, U188, U189, U190, U191, U192, U193, U194,
U196, U197, U200, U201, U202, U203, U204, U205, U206, U207, U208,
U209, U210, U211, U213, U214, U215, U216, U217, U218, U219, U220,
U221, U222, U223, U225, U226, U227, U228, U234, U235, U236, U237,
U238, U239, U240, U243, U244, U246, U247, U248, U249, U328, U353,
U359

NOTICE
If the filmed image is less clear than this Notice it is due to the quality of the document being filmed.

CD2F 003

0638

C. Constituent Limitations/ Maximum Feed Rates

1. Do you accept brominated wastes (e.g., activated alumina containing ethylene dibromide or phenolic polymers containing methyl bromide)? What is your maximum bromine limit (e.g., pounds per hour or maximum concentration in feed)?

1,607 pounds per year

D. Container types that can be Received at the Facility

1. Do you accept liquids, pumpable sludges, nonpumpable sludges, and solids in the following forms?

Container Type	Liquid	Pumpable Sludge	Nonpumpable Sludge	Solid
Lab Pack	Yes	Yes	Yes	Yes
Drums (What Sizes?)	No	No	Yes up to 55 gal.	Yes up to 55 gal
Cubic Yard Box	no	no	no	Yes
Cubic Yard Bag	NO	NO	NO	Yes
Roll-off	NO	NO	NO	Yes
Dumptrailer	NO	NO	NO	Yes
Tanker	Yes	Yes	NO	NO
Pressure Tanker (Cusco)	Yes	Yes	NO	NO
Railcar	NO	NO	NO	NO
Barge	NO	NO	NO	NO
Other (Specify)	NO	NO	NO	NO

NOTICE
If the filmed image is less clear than this Notice it is due to the quality of the document being filmed.

CD2F 003

0 6 7 9

NOTICE
If the filmed image is less clear than this Notice it is due to the quality of the document being filmed.

CD2F 003

0 6 4 0

9. Do you accept debris? Please indicate if you accept the following types of debris, and any limitations or conditions of acceptance.

Hazardous Waste Contaminated Debris Acceptance			
Type of Debris	Accept Now (Y/N)	Plan to Accept By June 94 (Y/N)	Acceptance Conditions (e.g. particle size)
Common Cloth Materials (e.g., rags, mop heads, blankets, or clothing)	Y	Y	in containers
Personal Protection Equipment (e.g., Tyvex suits)	Y	Y	in containers
Paper or Cardboard Materials	Y	Y	rolloff or container
Filter Cartridges	Y	Y	must be shreddable
Wood Materials	Y	Y	must be shreddable
Rubber Objects (e.g., tires, hoses)	N	Y	must be shreddable
PVC Pipe	Y	Y	must be shreddable
Other Plastic Debris	Y	Y	must be shreddable
Glass Debris	N	Y	must be shreddable
Ceramic Debris (e.g., semiconductors)		Y	must be shreddable
Metal Objects (e.g., pipes, valves, pumps, nuts and bolts)	Y	Y	in containers
Asbestos Materials (e.g., shingles, insulation)	Y	Y	containers or shreddable
Non-Soil Geologic Material (e.g., rocks)	Y	Y	up to 3' Ø
Concrete Debris	Y	Y	up to 3' Ø
Refractory Brick	Y	Y	up to 3' Ø
Other Bricks	Y	Y	up to 3' Ø
Slag	Y	Y	up to 3' Ø
Intact Batteries	Y	Y	container, lead lined
Battery Cases	Y	Y	must be shreddable
Electronic Components (e.g., printed circuit boards)	Y	Y	must be shreddable
Electrical Wires, Switches, etc.	Y	Y	must be shreddable

10. Please explain any debris acceptance conditions noted on the Table #9.

- All steel objects must be in containers.
- wood must be < 6' long and < 6" x 6"
- Large objects must be shreddable or crushable
- Lead/acid batteries in containers only - and have a lead limit

11. Do you accept soils? If so, under what conditions or limitations?

Yes - must not ignite when subjected to a flash point of 140°F

NOTICE
If the filmed image is less clear than this Notice it is due to the quality of the document being filmed.

CD2F 003

0 6 4 1

F. **Incinerator Unit Specific Capacity Sheet**

1. Unit #: [each question in Section F will be addressed for each unit]

2. Unit Type: Rotary Kiln

3. Thermal Rating:(M BTU/ Hour) 150m Btu/hour

4. Status: Currently Operating (Y/N) Y Planned for _____ 19___

If this kiln is currently not operating, please indicate current physical and/or regulatory status (e.g. preparing permit, permit submitted, performing trial burns, kiln under construction).

5. Average operating hours per year accounting for scheduled and unscheduled "down time".
CBE Hours/ Year

NOTICE
If the filmed image is less clear than this Notice it is due to the quality of the document being filmed.

CD2F 003

0 6 4 2

6. Please describe the waste feed mechanisms used to feed RCRA hazardous wastes to this unit.

Liquids:

- Centrifugal/positive displacement pumps from tanks or trucks
- Through atomizing nozzles

Pumpable Sludges:

- Positive displacement pumps from tanks or trucks
- Through pipe nozzles/lances.

Nonpumpable Sludges:

- Through bulk solids after mixing with drying agent or dry solids
- Through a Kanor shredder
- Through a chute

Containerized Solids:

- Through a ram feeder

NOTICE
If the filmed image is less clear than this Notice it is due to the quality of the document being filmed.

CD2F 003

0643

6. Bulk Solids:

- Received in a building, primary shredding by a KOMAR.
- Transported via conveyor to a sheer shredder
- Transported by conveyor to a weigh bin
- Charged to kiln by a chute
- Shredders can be by-passed

7. Please indicate the RCRA hazardous waste volume burned in this unit, it's permitted capacity, and practical capacity in the table below. CBI

Type of Waste	Amount burned during first 6 months of 1991 (Tons)	Maximum Permitted Waste Capacity (Tons/ Year) or (Pounds/Hour)	Maximum Practical Waste Feed Capacity (Tons/Year) or (Pounds/Hour)
Liquids			
Pumpable Sludges			
Nonpumpable Sludges			
Containerized Solids			
Bulk Solids			
Total			

7a. Were the waste volumes received during the first 6 months of 1991 typical of what you expect to receive over the next year? If not, how do you expect waste volumes to change after the next 6 months? 1 year? (i.e. provide the percentage increase or decrease of each waste form that you anticipate.)

CBI

NOTICE
If the filmed image is less clear than this Notice it is due to the quality of the document being filmed.

CD2F 003

0 6 4 4

8. Please indicate the amount of RCRA hazardous waste contaminated debris and soil burned and your capacity to burn debris and soil by filling in the table below. CBI

Type of Waste	Amount burned during first 6 months of 1991 (1991)	Maximum Permitted Waste Capacity (Tons/ Year) or (Pounds/ Hour)	Maximum Practical Waste Feed Capacity (Tons/ Year) or (Pounds/Hour)
Debris			
Soils			

8a. Are soil volumes and capacities of soil accounted for in the Bulk Solid category of Table #7? If not, what categories do they fall under? Please provide percentages of soil under those categories.

CBI

8b. Are debris volumes and capacities accounted for in the Bulk Solid category of Table #7? If not, what categories do they fall under? Please provide percentages of debris under those categories.

CBI

NOTICE
If the filmed image is less clear than this Notice it is due to the quality of the document being filmed.

CD2F 003

0645

G.

Future Capacity of Commercial Incinerators

1. What other physical changes (e.g., changes to feed systems, storage area) are planned for this facility that will change it's capacity by July, 1994? Describe the change and the resulting change in capacity by waste form (i.e. the increase or decrease by waste form.)

We currently have permitted storage which has not been constructed. We may construct the additional tankage based on the demand.
The above grade landfill permit includes a pre-process building which will allow repackaging of containers and bulk to meet feed limitations.

2. What other regulatory changes are planned for this facility that will change it's capacity.? Describe the change and the resulting change in capacity by waste form.

TSCA approval will allow PCB incineration. CERCLA approval is expected.

NOTICE
If the filmed image is less clear than this Notice, it is due to the quality of the document being filmed.

CD2F 003

0646

G. **Other Factors to Determine Future Capacity of Commercial Incinerators (Ctd.)**

3. Are you prohibited from receiving any RCRA hazardous wastes from <u>any</u> states? If so, which states?

No

4. Are you limited to receiving a maximum amount of RCRA hazardous waste from any states? If so, which states and what is maximum amount?

No

NOTICE
If the filmed image is less clear than this Notice it is due to the quality of the document being filmed.

CD2F 003

0 6 4 7

Sauget, Illinois

A. Facility Information

1. Respondent Name and Title: Rudy Vingris - Marketing Manager - Incinerator

Company: Chemical waste Management

Phone Number: (708) 818-1618

Fax Number: (708) 818-1522

Name of Caller:

Date of Call:

Time of Call:

2. Number of units currently burning RCRA hazardous waste at this facility: 4

Number of units expected to shutdown by July 1994: 0

Additional units expected to come on line by July 1994: 0

Total number of units expected to burn RCRA hazardous wastes at this at the facility by July 1994: 4

3. Has this facility undergone any physical or regulatory changes in the past 2 years that have changed it's capacity? If so, briefly explain.

The unit 4 incinerator was started up in 1989. Unit 4 has a total thermal release capacity of 50 mm Btu/hr.

NOTICE
If the filmed image is less clear than this Notice it is due to the quality of the document being filmed.

CD2F 003

0 6 4 8

A. Facility Information (ctd.)

4. What is the current overall utilization of this facility's incineration capacity for following physical forms of waste? CBI

Liquids	_____%
Pumpable Sludges	_____%
Nonpumpable Sludges	_____%
Bulk Solids	_____%
Containerized Solids	_____%
Total	_____%

NOTICE
If the filmed image is less clear than this Notice it is due to the quality of the document being filmed.

CD2F 003

0649

B. Permit Issues

1. Have you received a final RCRA Part B permit? If not, when do you expect to receive a RCRA Part B permit?

Yes

2. What other permit(s) are required (e.g. NPDES, Air Emission)? By when? What is the current status of these permit(s)?

Air permits - site is operating under consent order which incorporates the air permits.

Wastewater pre-treatment in effect.

NOTICE
If the filmed image is less clear than this Notice it is due to the quality of the document being filmed.

CD2F 003

0 6 5 0

B. Permit Issues (ctd.)

3. What RCRA wastes are currently permitted? If more convenient, please fax list. Are all units authorized for same RCRA codes? If not, please specify RCRA codes accepted for each unit.

All except unacceptable codes list

4. Are you adding any waste codes to your permit? Which ones? When do you expect approvals?

Not at the current time

5. What types of wastes do you generally reject?

Explosives, radioactive and mixed wastes, dioxin and related wastes, PCB's and wastes contained in compressed gas cylinders

NOTICE
If the filmed image is less clear than this Notice it is due to the quality of the document being filmed.

CD2F 003

0651

Post-it™ brand fax transmittal memo 7671 | # of pages ▸ 1

To:	From:
Co.: B.	Co.: TWI
Dept.	Phone #
Fax # 301-218-1522	Fax #

NOTICE
If the filmed image is less clear than this Notice it is due to the quality of the document being filmed.

TRADE WASTE INCINERATION

UNACCEPTABLE MATERIALS

PART B (SECTION VIII)

F020
F021
F022
F023
F026
F027
F028

K001

Asbestos
PCBs (>50 ppm)

P009 - Ammonium Picrate (gas)
P031 - Cyanogen (gas)
P033 - Cyanogen Chloride (gas)
P056 - Fluorine (gas)
P063 - Hydrogen Cyanide (gas)
P095 - Phosgene (gas)
P096 - Phosphine (gas)

U075 - Dichlorodifluoromethane (>0.1%)
U121 - Trichloromonofluoromethane (>0.1%)
U134 - Hydrogen Fluoride (gas)
U225 - Tribromomethane (>0.1%)

Radioactives (other than deregulated C^{14} and H^{3})

K107
K108
K109
K110

THIRD THIRD SPECIFIED TECHNOLOGY CODES

D006 (Cadmium Batteries)
D008 (Lead Acid Batteries)

K061 (High Zn subcategory)
K069

P076 - Nitric Oxide
P078 - Nitrogen Dioxide

CODES RESTRICTED DUE TO LOW TREATMENT STDS OR SITE POLICY

D017	K022	K060	U151	K085
F010	K028	K099	K011	K087
F024	K043	K104	K013	
			K014	

ACCEPTABLE AS APPENDIX IV OR V LABPACK ONLY

P015

REV. 4/25/91

CD2F 003

0 0 5 2

C. Constituent Limitations/ Maximum Feed Rates

1. Do you accept brominated wastes (e.g., activated alumina containing ethylene dibromide or phenolic polymers containing methyl bromide)? What is your maximum bromine limit (e.g., pounds per hour or maximum concentration in feed)?

Very limited amounts - no permit limit, <1/2% of feed
Operational limit

D. Container types that can be Received at the Facility

1. Do you accept liquids, pumpable sludges, nonpumpable sludges, and solids in the following forms?

Container Type	Liquid	Pumpable Sludge	Nonpumpable Sludge	Solid
Lab Pack	Yes	Yes	Yes	Yes
Drums (What Sizes?)	55 to 85gal.	55 to 85gal.	55 to 85gal.	55 to 85gal
Cubic Yard Box	No	No	No	Yes
Cubic Yard Bag	No	No	No	Yes
Roll-off	No	No	No	Yes
Dumptrailer	No	No	No	Yes
Tanker	Yes	Yes	No	No
Pressure Tanker (Cusco)	No	No	No	No
Railcar	No	No	No	No
Barge	No	No	No	No
Other (Specify)				
Heated Tanker	Yes	No	No	No

NOTICE
If the filmed image is less clear than this Notice it is due to the quality of the document being filmed.

CD2F 003

0 6 5 3

9. Do you accept debris? Please indicate if you accept the following types of debris, and any limitations or conditions of acceptance.

Hazardous Waste Contaminated Debris Acceptance			
Type of Debris	Accept Now (Y/N)	Plan to Accept By June 94 (Y/N)	Acceptance Conditions (e.g. particle size)
Common Cloth Materials (e.g., rags, mop heads, blankets, or clothing)	Yes	Yes	In drums
Personal Protection Equipment (e.g., Tyvex suits)	Yes	Yes	In drums
Paper or Cardboard Materials	Yes	Yes	In drums
Filter Cartridges	Yes	Yes	In drums
Wood Materials	Yes	Yes	In drums
Rubber Objects (e.g., tires, hoses)	Yes	Yes	In drums
PVC Pipe	Yes	Yes	In drums
Other Plastic Debris	Yes	Yes	In drums
Glass Debris	Yes	Yes	In drums
Ceramic Debris (e.g., semiconductors)	Yes	Yes	In drums
Metal Objects (e.g., pipes, valves, pumps, nuts and bolts)	Yes	Yes	In drums
Asbestos Materials (e.g., shingles, insulation)	No	No	
Non-Soil Geologic Material (e.g., rocks)	Yes	Yes	In bulk <4" size
Concrete Debris	Yes	Yes	In bulk <4" size
Refractory Brick	Yes	Yes	In bulk <4" size
Other Bricks	Yes	Yes	In bulk <4" size
Slag	Yes	Yes	In bulk <4" size
Intact Batteries	Yes	Yes	In drums <5lb
Battery Cases	Yes	Yes	In drums
Electronic Components (e.g., printed circuit boards)	Yes	Yes	In drums
Electrical Wires, Switches, etc.	Yes	Yes	In drums

NOTICE
If the filmed image is less clear than this Notice it is due to the quality of the document being filmed.

CD2F 003

0654

10. Please explain any debris acceptance conditions noted on the Table #9.

Debris is primarily accepted in drums due to material handling difficulties.

11. Do you accept soils? If so, under what conditions or limitations?

Yes. In bulk if they are less than 4" in diameter or in drums.

Yes - must not ignite when subjected to a flash point of 140°F.

NOTICE
If the filmed image is less clear than this Notice it is due to the quality of the document being filmed.

CD2F 003

0 6 5 5

F. **Incinerator Unit Specific Capacity Sheet**

1. Unit #: [each question in Section F will be addressed for each unit] 1

2. Unit Type: Fixed hearth

3. Thermal Rating:(M BTU/ Hour) 14

4. Status: Currently Operating (Y/N) Yes Planned for _____ 19___

If this kiln is currently not operating, please indicate current physical and/or regulatory status (e.g. preparing permit, permit submitted, performing trial burns, kiln under construction).

5. Average operating hours per year accounting for scheduled and unscheduled "down time". CBI Hours/ Year

NOTICE
If the filmed image is less clear than this Notice it is due to the quality of the document being filmed.

CD2F 003

0 0 5 5 0

F. **Incinerator Unit Specific Capacity Sheet**

1. Unit #: [each question in Section F will be addressed for each unit] 3

2. Unit Type: Fixed hearth

3. Thermal Rating:(M BTU/ Hour) 16

4. Status: Currently Operating (Y/N) Yes Planned for _____ 19___

If this kiln is currently not operating, please indicate current physical and/or regulatory status (e.g. preparing permit, permit submitted, performing trial burns, kiln under construction).

5. Average operating hours per year accounting for scheduled and unscheduled "down time".
CRI Hours/ Year

NOTICE
If the filmed image is less clear than this Notice it is due to the quality of the document being filmed.

CD2F 003

0 6 5 7

F. Incinerator Unit Specific Capacity Sheet

1. Unit #: [each question in Section F will be addressed for each unit] 4

2. Unit Type: Rotary kiln

3. Thermal Rating:(M BTU/ Hour) 50

4. Status: Currently Operating (Y/N) yes Planned for _____ 19____

If this kiln is currently not operating, please indicate current physical and/or regulatory status (e.g. preparing permit, permit submitted, performing trial burns, kiln under construction).

5. Average operating hours per year accounting for scheduled and unscheduled "down time".
CBI Hours/ Year

NOTICE
If the filmed image is less clear than this Notice it is due to the quality of the document being filmed.

CD2F 003

0658

6. Please describe the waste feed mechanisms used to feed RCRA hazardous wastes to this unit.

For All Units

Liquids:

Drum decant or bulk unloading to storage tanks. Transfer to blending tanks, transfer to atomizers for injection to the incinerator.

Pumpable Sludges:

Drum decant or bulk unloading to storage tanks. Tank transfer to sludge lance for injection to incinerator

Nonpumpable Sludges:

Steel drums are repackaged to burnable containers (fiber or plastic). Burnable containers are ram fed to the incinerator.

Containerized Solids:

Steel drums are repackaged to burnable containers (fiber or plastic). Burnable containers are ram fed to the incinerator.

NOTICE
If the filmed image is less clear than this Notice it is due to the quality of the document being filmed.

CD2F 003

0 6 5 9

For All Units

6. Bulk Solids:

Only at Unit #4. Waste is received in pits. Transferred via clamshell to rem. feeder

7. Please indicate the RCRA hazardous waste volume burned in this unit, it's permitted capacity, and practical capacity in the table below. CBI

Type of Waste	Amount burned during first 6 months of 1991 (Tons)	Maximum Permitted Waste Capacity (Tons/ Year) or (Pounds/Hour)	Maximum Practical Waste Feed Capacity (Tons/Year) or (Pounds/Hour)
Liquids			
Pumpable Sludges			
Nonpumpable Sludges			
Containerized Solids			
Bulk Solids			
Total			

7a. Were the waste volumes received during the first 6 months of 1991 typical of what you expect to receive over the next year? If not, how do you expect waste volumes to change after the next 6 months? 1 year? (i.e. provide the percentage increase or decrease of each waste form that you anticipate.)

CBI

NOTICE
If the filmed image is less clear than this Notice it is due to the quality of the document being filmed.

CD2F 003

0 6 6 0

8. Please indicate the amount of RCRA hazardous waste contaminated debris and soil burned and your capacity to burn debris and soil by filling in the table below. CBI

Type of Waste	Amount burned during first 6 months of 1991 (1991)	Maximum Permitted Waste Capacity (Tons/ Year) or (Pounds/ Hour)	Maximum Practical Waste Feed Capacity (Tons/ Year) or (Pounds/Hour)
Debris			
Soils			

8a. Are soil volumes and capacities of soil accounted for in the Bulk Solid category of Table #7? If not, what categories do they fall under? Please provide percentages of soil under those categories.

CBI

8b. Are debris volumes and capacities accounted for in the Bulk Solid category of Table #7? If not, what categories do they fall under? Please provide percentages of debris under those categories.

CBI

NOTICE
If the filmed image is less clear than this Notice it is due to the quality of the document being filmed.

CD2F 003

0661

G.

Future Capacity of Commercial Incinerators

1. What other physical changes (e.g., changes to feed systems, storage area) are planned for this facility that will change it's capacity by July, 1994? Describe the change and the resulting change in capacity by waste form (i.e. the increase or decrease by waste form.)

A material processing facility may be built which would increase containerized solids processing but would not necessarily impact incineration capacity

2. What other regulatory changes are planned for this facility that will change it's capacity.? Describe the change and the resulting change in capacity by waste form.

None

NOTICE
If the filmed image is less clear than this Notice it is due to the quality of the document being filmed.

CD2F 003

0 6 6 2

G. Other Factors to Determine Future Capacity of Commercial Incinerators (Ctd.)

3. Are you prohibited from receiving any RCRA hazardous wastes from any states? If so, which states?

No

4. Are you limited to receiving a maximum amount of RCRA hazardous waste from any states? If so, which states and what is maximum amount?

NO

NOTICE
If the filmed image is less clear than this Notice it is due to the quality of the document being filmed.

CD2F 003

0663

Baton Rouge, La.

A. Facility Information

1. Respondent Name and Title: Mr William Fu - Marketing Manager

Company: Rhône-Poulenc

Phone Number: (203) 925-3300

Fax Number: (203) 925-3656

Name of Caller: Prakash Ramaswamy

Date of Call: August 19, 1991

Time of Call: 4:30 PM (EST)

2. Number of units currently burning RCRA hazardous waste at this facility: 2

Number of units expected to shutdown by July 1994: 0

Additional units expected to come on line by July 1994: 0

Total number of units expected to burn RCRA hazardous wastes at this at the facility by July 1994: 2

3. Has this facility undergone any physical or regulatory changes in the past 2 years that have changed it's capacity? If so, briefly explain.

no

NOTICE
If the filmed image is less clear than this Notice it is due to the quality of the document being filmed.

CD2F 003

0664

A. Facility Information (ctd.)

4. What is the current overall utilization of this facility's incineration capacity for following physical forms of waste? CBI

Liquids _____%
Pumpable Sludges _____%
Nonpumpable Sludges _____%
Bulk Solids _____%
Containerized Solids _____%
Total _____%

NOTICE
If the filmed image is less clear than this Notice it is due to the quality of the document being filmed.

CD2F 003

0665

B. Permit Issues

1. Have you received a final RCRA Part B permit? If not, when do you expect to receive a RCRA Part B permit?

Yes

2. What other permit(s) are required (e.g. NPDES, Air Emission)? By when? What is the current status of these permit(s)?

NPDES
State Air Emissions
Permits are final
TWC Permit

NOTICE
If the filmed image is less clear than this Notice it is due to the quality of the document being filmed.

CD2F 003

0 6 6 6

NOTICE
If the filmed image is less clear than this Notice it is due to the quality of the document being filmed.

B. Permit Issues (ctd.)

3. What RCRA wastes are currently permitted? If more convenient, please fax list. Are all units authorized for same RCRA codes? If not, please specify RCRA codes accepted for each unit.

Of the newly listed wastes the facility can accept the following; F037, F038, U035, U353, K117 K115 K139, K138, D018 - D043

4. Are you adding any waste codes to your permit? Which ones? When do you expect approvals?

Mr. Fu was uncertain

5. What types of wastes do you generally reject?

PCB's, Dioxins, Radioactives, Infectious, Municipal garbage, explosives.
Of the newly listed wastes; U359, K123-K126, K136, K141 - K145, K147, K148

CD2F 003

0 0 6 7

C. Constituent Limitations/ Maximum Feed Rates

1. Do you accept brominated wastes (e.g., activated alumina containing ethylene dibromide or phenolic polymers containing methyl bromide)? What is your maximum bromine limit (e.g., pounds per hour or maximum concentration in feed)?

Facility can accept brominated wastes. Due to insufficient amount of brominated waste accepted, this facility cannot determined if there is a maximum operating limit. There is no permitted maximum limit.

D. Container types that can be Received at the Facility

1. Do you accept liquids, pumpable sludges, nonpumpable sludges, and solids in the following forms?

Container Type	Liquid	Pumpable Sludge	Nonpumpable Sludge	Solid
Lab Pack				
Drums (What Sizes?)				
Cubic Yard Box				
Cubic Yard Bag				
Roll-off				
Dumptrailer				
Tanker	✓	✓		
Pressure Tanker (Cusco)	✓	✓		
Railcar	✓	✓		
Barge				
Other (Specify)				

NOTICE
If the filmed image is less clear than this Notice it is due to the quality of the document being filmed.

CD2F 003

0668

9. Do you accept debris? Please indicate if you accept the following types of debris, and any limitations or conditions of acceptance.

Hazardous Waste Contaminated Debris Acceptance			
Type of Debris	Accept Now (Y/N)	Plan to Accept By June 94 (Y/N)	Acceptance Conditions (e.g. particle size)
Common Cloth Materials (e.g., rags, mop heads, blankets, or clothing)	N	N	
Personal Protection Equipment (e.g., Tyvex suits)	N	N	
Paper or Cardboard Materials	N	N	
Filter Cartridges	N	N	
Wood Materials	N	N	
Rubber Objects (e.g., tires, hoses)	N	N	
PVC Pipe	N	N	
Other Plastic Debris	N	N	
Glass Debris	N	N	
Ceramic Debris (e.g., semiconductors)	N	N	
Metal Objects (e.g., pipes, valves, pumps, nuts and bolts)	N	N	
Asbestos Materials (e.g., shingles, insulation)	N	N	
Non-Soil Geologic Material (e.g., rocks)	N	N	
Concrete Debris	N	N	
Refractory Brick	N	N	
Other Bricks	N	N	
Slag	N	N	
Intact Batteries	N	N	
Battery Cases	N	N	
Electronic Components (e.g., printed circuit boards)	N	N	
Electrical Wires, Switches, etc.	N	N	

NOTICE
If the filmed image is less clear than this Notice it is due to the quality of the document being filmed.

CD2F 003

0 6 6 9

10. Please explain any debris acceptance conditions noted on the Table #9.

N/A

11. Do you accept soils? If so, under what conditions or limitations?

N/A

NOTICE
If the filmed image is less clear than this Notice it is due to the quality of the document being filmed.

CD2F 003

0670

F. **Incinerator Unit Specific Capacity Sheet**

1. Unit #: [each question in Section F will be addressed for each unit] 1

2. Unit Type: Sulfur Recovery Furnace

3. Thermal Rating:(M BTU/ Hour) 150 MBTU/hr

4. Status: Currently Operating (Y/N) _____ Planned for _____ 19___

If this kiln is currently not operating, please indicate current physical and/or regulatory status (e.g. preparing permit, permit submitted, performing trial burns, kiln under construction).

5. Average operating hours per year accounting for scheduled and unscheduled "down time".
CBI Hours/ Year

NOTICE
If the filmed image is less clear than this Notice it is due to the quality of the document being filmed.

CD2F 003

0 6 7 1

NOTICE
If the filmed image is less clear than this Notice it is due to the quality of the document being filmed.

F. **Incinerator Unit Specific Capacity Sheet**

1. Unit #: [each question in Section F will be addressed for each unit] 2

2. Unit Type: Sulfur Recovery Furnace

3. Thermal Rating:(M BTU/ Hour) 150 MBTU/hr

4. Status: Currently Operating (Y/N) ____ Planned for _____ 19___

If this kiln is currently not operating, please indicate current physical and/or regulatory status (e.g. preparing permit, permit submitted, performing trial burns, kiln under construction).

5. Average operating hours per year accounting for scheduled and unscheduled "down time".
CBI Hours/ Year

CD2F 003

0 6 7 2

6. Please describe the waste feed mechanisms used to feed RCRA hazardous wastes to this unit.

Liquids:

Liquid is directly fed from tanker or railcar into furnace.

Pumpable Sludges:

Pumpable sludges are usually blended in tanks. If pumpable sludges are viscous enough, they may be pumped directly into furnace

Nonpumpable Sludges:

N/A

Containerized Solids:

N/A

NOTICE
If the filmed image is less clear than this Notice it is due to the quality of the document being filmed.

CD2F 003

0 0 6 1 3

6. Bulk Solids:

NA

7. Please indicate the RCRA hazardous waste volume burned in this unit, it's permitted capacity, and practical capacity in the table below. CBI

Type of Waste	Amount burned during first 6 months of 1991 (Tons)	Maximum Permitted Waste Capacity (Tons/ Year) or (Pounds/Hour)	Maximum Practical Waste Feed Capacity (Tons/Year) or (Pounds/Hour)
Liquids			
Pumpable Sludges			
Nonpumpable Sludges			
Containerized Solids			
Bulk Solids			
Total			

7a. Were the waste volumes received during the first 6 months of 1991 typical of what you expect to receive over the next year? If not, how do you expect waste volumes to change after the next 6 months? 1 year? (i.e. provide the percentage increase or decrease of each waste form that you anticipate.)

CBI

NOTICE
If the filmed image is less clear than this Notice it is due to the quality of the document being filmed.

CD2F 003

0 6 7 4

8. Please indicate the amount of RCRA hazardous waste contaminated debris and soil burned and your capacity to burn debris and soil by filling in the table below.

Type of Waste	Amount burned during first 6 months of 1991 (1991)	Maximum Permitted Waste Capacity (Tons/ Year) or (Pounds/ Hour)	Maximum Practical Waste Feed Capacity (Tons/ Year) or (Pounds/Hour)
Debris	0	0	0
Soils	0	0	0

8a. Are soil volumes and capacities of soil accounted for in the Bulk Solid category of Table #7? If not, what categories do they fall under? Please provide percentages of soil under those categories.

N/A

8b. Are debris volumes and capacities accounted for in the Bulk Solid category of Table #7? If not, what categories do they fall under? Please provide percentages of debris under those categories.

N/A

NOTICE
If the filmed image is less clear than this Notice it is due to the quality of the document being filmed.

CD2F 003

0 0 7 5

G.

Future Capacity of Commercial Incinerators

1. What other physical changes (e.g., changes to feed systems, storage area) are planned for this facility that will change it's capacity by July, 1994? Describe the change and the resulting change in capacity by waste form (i.e. the increase or decrease by waste form.)

Blending tanks are to be constructed in order to enlarge storage capacity.

2. What other regulatory changes are planned for this facility that will change it's capacity.? Describe the change and the resulting change in capacity by waste form.

No

NOTICE: If the filmed image is less clear than this Notice it is due to the quality of the document being filmed.

CD2F 003

0676

G. **Other Factors to Determine Future Capacity of Commercial Incinerators (Ctd.)**

3. Are you prohibited from receiving any RCRA hazardous wastes from <u>any</u> states? If so, which states?

No

4. Are you limited to receiving a maximum amount of RCRA hazardous waste from any states? If so, which states and what is maximum amount?

No

NOTICE
If the filmed image is less clear than this Notice it is due to the quality of the document being filmed.

CD2F 003

0 6 7 1

Houston, Texas

A. Facility Information

1. Respondent Name and Title: Mr. William Fu Marketing Manager

Company: Rhône - Poulenc

Phone Number: (203) 925-3300

Fax Number: (203) 925-3656

Name of Caller: Prekash Ramaswamy

Date of Call: August 19, 1991

Time of Call: 4:30 pm (EST)

2. Number of units currently burning RCRA hazardous waste at this facility: 1

Number of units expected to shutdown by July 1994: 0

Additional units expected to come on line by July 1994: 0

Total number of units expected to burn RCRA hazardous wastes at this at the facility by July 1994: 1

3. Has this facility undergone any physical or regulatory changes in the past 2 years that have changed it's capacity? If so, briefly explain.

no

NOTICE
If the filmed image is less clear than this Notice it is due to the quality of the document being filmed.

CD2F 003

0678

NOTICE
If the filmed image is less clear than this Notice it is due to the quality of the document being filmed.

A. Facility Information (ctd.)

4. What is the current overall utilization of this facility's incineration capacity for following physical forms of waste? CBI

Liquids	_____%
Pumpable Sludges	_____%
Nonpumpable Sludges	_____%
Bulk Solids	_____%
Containerized Solids	_____%
Total	_____%

CD2F 003

0 6 7 9

B. Permit Issues

1. Have you received a final RCRA Part B permit? If not, when do you expect to receive a RCRA Part B permit?

Yes

2. What other permit(s) are required (e.g. NPDES, Air Emission)? By when? What is the current status of these permit(s)?

NPDES
State Air Emissions
Permits are final
TWC Permit

NOTICE
If the filmed image is less clear than this Notice it is due to the quality of the document being filmed.

CD2F 003

0688

NOTICE
If the filmed image is less clear than this Notice it is due to the quality of the document being filmed.

CD2F 003

0 6 8 1

B. Permit Issues (ctd.)

3. What RCRA wastes are currently permitted? If more convenient, please fax list. Are all units authorized for same RCRA codes? If not, please specify RCRA codes accepted for each unit.

Of the newly listed wastes the facility can accept the following; F037, F038, U238, U353, K117, K118 K131, K132, D018 - D043

4. Are you adding any waste codes to your permit? Which ones? When do you expect approvals?

Mr. Fu was uncertain

5. What types of wastes do you generally reject?

PCBs, Dioxins, Radioactives, Infectious, municipal garbage, explosives
Of the newly listed wastes; U359, K123-K126, K136, K141-K145, K147, K148

NOTICE
If the filmed image is less clear than this Notice it is due to the quality of the document being filmed.

C. Constituent Limitations/ Maximum Feed Rates

1. Do you accept brominated wastes (e.g., activated alumina containing ethylene dibromide or phenolic polymers containing methyl bromide)? What is your maximum bromine limit (e.g., pounds per hour or maximum concentration in feed)?

Facility can accept brominated wastes. Due to insufficient amount of brominated waste accepted, this facility cannot determined if there is a maximum operating limit. There is no permitted maximum limit

D. Container types that can be Received at the Facility

1. Do you accept liquids, pumpable sludges, nonpumpable sludges, and solids in the following forms?

Container Type	Liquid	Pumpable Sludge	Nonpumpable Sludge	Solid
Lab Pack				
Drums (What Sizes?)				
Cubic Yard Box				
Cubic Yard Bag				
Roll-off				
Dumptrailer				
Tanker	✓	✓		
Pressure Tanker (Cusco)	✓	✓		
Railcar	✓	✓		
Barge				
Other (Specify)				

CD2F 003

0682

NOTICE
If the filmed image is less clear than this Notice it is due to the quality of the document being filmed.

CD2F 003

0 6 8 3

9. Do you accept debris? Please indicate if you accept the following types of debris, and any limitations or conditions of acceptance.

Hazardous Waste Contaminated Debris Acceptance			
Type of Debris	Accept Now (Y/N)	Plan to Accept By June 94 (Y/N)	Acceptance Conditions (e.g. particle size)
Common Cloth Materials (e.g., rags, mop heads, blankets, or clothing)	N	N	
Personal Protection Equipment (e.g., Tyvex suits)	N	N	
Paper or Cardboard Materials	N	N	
Filter Cartridges	N	N	
Wood Materials	N	N	
Rubber Objects (e.g., tires, hoses)	N	N	
PVC Pipe	N	N	
Other Plastic Debris	N	N	
Glass Debris	N	N	
Ceramic Debris (e.g., semiconductors)	N	N	
Metal Objects (e.g., pipes, valves, pumps, nuts and bolts)	N	N	
Asbestos Materials (e.g., shingles, insulation)	N	N	
Non-Soil Geologic Material (e.g., rocks)	N	N	
Concrete Debris	N	N	
Refractory Brick	N	N	
Other Bricks	N	N	
Slag	N	N	
Intact Batteries	N	N	
Battery Cases	N	N	
Electronic Components (e.g., printed circuit boards)	N	N	
Electrical Wires, Switches, etc.	N	N	

10. Please explain any debris acceptance conditions noted on the Table #9.

N/A

11. Do you accept soils? If so, under what conditions or limitations?

N/A

NOTICE
If the filmed image is less clear than this Notice it is due to the quality of the document being filmed.

CD2F 003

0 6 8 4

F. **Incinerator Unit Specific Capacity Sheet**

1. Unit #: [each question in Section F will be addressed for each unit] _____

2. Unit Type: Sulfur Recovery Furnace

3. Thermal Rating (M BTU/ Hour) 150 MBTU/hr

4. Status: Currently Operating (Y/N) _____ Planned for _____ 19___

If this kiln is currently not operating, please indicate current physical and/or regulatory status (e.g. preparing permit, permit submitted, performing trial burns, kiln under construction).

_____

_____

_____

_____

_____

_____

_____

5. Average operating hours per year accounting for scheduled and unscheduled "down time".
CBI Hours/ Year

NOTICE
If the filmed image is less clear than this Notice it is due to the quality of the document being filmed.

CD2F 003

0 6 8 5

6. Please describe the waste feed mechanisms used to feed RCRA hazardous wastes to this unit.

Liquids:

Liquid is directly fed from tanker or railcar into furnace.

Pumpable Sludges:

Pumpable sludges are usually blended in tanks. If pumpable sludges are viscous enough, they may be pumped directly into furnace

Nonpumpable Sludges:

N/A

Containerized Solids:

N/A

NOTICE
If the filmed image is less clear than this Notice it is due to the quality of the document being filmed.

CD2F 003

0 6 8 6

6. Bulk Solids:

NA

7. Please indicate the RCRA hazardous waste volume burned in this unit, it's permitted capacity, and practical capacity in the table below. CBI

Type of Waste	Amount burned during first 6 months of 1991 (Tons)	Maximum Permitted Waste Capacity (Tons/ Year) or (Pounds/Hour)	Maximum Practical Waste Feed Capacity (Tons/Year) or (Pounds/Hour)
Liquids			
Pumpable Sludges			
Nonpumpable Sludges			
Containerized Solids			
Bulk Solids			
Total			

7a. Were the waste volumes received during the first 6 months of 1991 typical of what you expect to receive over the next year? If not, how do you expect waste volumes to change after the next 6 months? 1 year? (i.e. provide the percentage increase or decrease of each waste form that you anticipate.)

CBI

NOTICE
If the filmed image is less clear than this Notice it is due to the quality of the document being filmed.

CD2F 003

0 6 8 7

8. Please indicate the amount of RCRA hazardous waste contaminated debris and soil burned and your capacity to burn debris and soil by filling in the table below.

Type of Waste	Amount burned during first 6 months of 1991 (1991)	Maximum Permitted Waste Capacity (Tons/ Year) or (Pounds/ Hour)	Maximum Practical Waste Feed Capacity (Tons/ Year) or (Pounds/Hour)
Debris	0	0	0
Soils	0	0	0

8a. Are soil volumes and capacities of soil accounted for in the Bulk Solid category of Table #7? If not, what categories do they fall under? Please provide percentages of soil under those categories.

N/A

8b. Are debris volumes and capacities accounted for in the Bulk Solid category of Table #7? If not, what categories do they fall under? Please provide percentages of debris under those categories.

N/A

NOTICE
If the filmed image is less clear than this Notice it is due to the quality of the document being filmed.

CD2F 003

0 6 8 8

G.

Future Capacity of Commercial Incinerators

1. What other physical changes (e.g., changes to feed systems, storage area) are planned for this facility that will change it's capacity by July, 1994? Describe the change and the resulting change in capacity by waste form (i.e. the increase or decrease by waste form.)

Blending tanks are to be constructed in order to enlarge storage capacity.

2. What other regulatory changes are planned for this facility that will change it's capacity.? Describe the change and the resulting change in capacity by waste form.

No

NOTICE
If the filmed image is less clear than this Notice it is due to the quality of the document being filmed.

CD2F 003

0689

G. **Other Factors to Determine Future Capacity of Commercial Incinerators (Ctd.)**

3. Are you prohibited from receiving any RCRA hazardous wastes from <u>any</u> states? If so, which states?

No

4. Are you limited to receiving a maximum amount of RCRA hazardous waste from any states? If so, which states and what is maximum amount?

No

NOTICE
If the filmed image is less clear than this Notice it is due to the quality of the document being filmed.

CD2F 003

0 6 9 0

NOTICE
If the filmed image is less clear than this Notice it is due to the quality of the document being filmed.

A. Facility Information

1. Respondent Name and Title: STEPHEN W. CANGE ENVIRONMENTAL COMPLIANCE SPECIALIST

Company: ROLLINS ENVIRONMENTAL SERVICES (LA) INC.

Phone Number: (504) 778-1234

Fax Number: (504) 778-3510

Name of Caller: PRODASH RAMASWAMY

Date of Call:

Time of Call:

2. Number of units currently burning RCRA hazardous waste at this facility: 1

Number of units expected to shutdown by July 1994: 0

Additional units expected to come on line by July 1994: 0

Total number of units expected to burn RCRA hazardous wastes at this at the facility by July 1994: 1

3. Has this facility undergone any physical or regulatory changes in the past 2 years that have changed it's capacity? If so, briefly explain.

DECREASING LANDFILL SPACE HAS REDUCED OVERALL FACILITY CAPACITY DURING PAST TWO YEARS — INCINERATION CAPACITY APPROXIMATELY THE SAME

CD2F 003

0691

A. Facility Information (ctd.)

4. What is the current overall utilization of this facility's incineration capacity for following physical forms of waste?

Liquids	65 %
Pumpable Sludges	5 %
Nonpumpable Sludges	0 %
Bulk Solids	0 %
Containerized Solids	30 %
Total	100 %

NOTICE
If the filmed image is less clear than this Notice it is due to the quality of the document being filmed.

CD2F 003

0692

NOTICE
If the filmed image is less clear than this Notice it is due to the quality of the document being filmed.

CD2F 003

0 6 9 3

B. Permit Issues

1. Have you received a final RCRA Part B permit? If not, when do you expect to receive a RCRA Part B permit?

FINAL RCRA PART B PERMIT IS CURRENTLY PENDING. DATE OF FINAL APPROVAL IS UNKNOWN. THIS FACILITY IS CONTINUING TO OPERATE UNDER INTERIM STATUS...

2. What other permit(s) are required (e.g. NPDES, Air Emission)? By when? What is the current status of these permit(s)?

NPDES - CURRENTLY OPERATING UNDER PERMIT # LA0003824S - NEWLY ISSUED PERMIT IS UNDER APPEAL

AIR - CURRENTLY OPERATING UNDER LA AIR PERMIT # 8 - NEW AIR PERMIT APPLICATION HAS BEEN SUBMITTED TO LA. DEQ AIR DIVISION

NOTICE
If the filmed image is less clear than this Notice it is due to the quality of the document being filmed.

B. Permit Issues (ctd.)

3. What RCRA wastes are currently permitted? If more convenient, please fax list. Are all units authorized for same RCRA codes? If not, please specify RCRA codes accepted for each unit.

PART A LIST WILL BE FAXED.

4. Are you adding any waste codes to your permit? Which ones? When do you expect approvals?

NO WASTE CODE ADDITIONS PENDING AT PRESENT

5. What types of wastes do you generally reject?

DIOXINS, PCBS, EXPLOSIVES, RADIOACTIVES, MEDICAL/INFECTIOUS, GASES/CHLORDANES

CD2F 003

0 6 0 4

NOTICE
If the filmed image is less clear than this Notice it is due to the quality of the document being filmed.

C. Constituent Limitations/ Maximum Feed Rates

1. Do you accept brominated wastes (e.g., activated alumina containing ethylene dibromide or phenolic polymers containing methyl bromide)? What is your maximum bromine limit (e.g., pounds per hour or maximum concentration in feed)?

2.5 lb BR/pky, 34 lb BR/hour

D. Container types that can be Received at the Facility

1. Do you accept liquids, pumpable sludges, nonpumpable sludges, and solids in the following forms?

Container Type	Liquid	Pumpable Sludge	Nonpumpable Sludge	Solid
Lab Pack	X	X	X	X
Drums (What Sizes?)	1 - 85gal	up to 85gal	up to 85gal	up to 85gal
Cubic Yard Box	no	~~S&E or DLF~~ no	~~S&E or DLF~~ no	~~S&E or DLF~~ no
Cubic Yard Bag	no	no	no	no
Roll-off	no	S&E or DLF	S&E or DLF	S&E or DLF
Dumptrailer	no	"	"	"
Tanker	yes	yes	no	no
Pressure Tanker (Cusco)	yes	no	no	no
Railcar	yes	no	no	no
Barge	no	no	no	no
Other (Specify)		fiber or plastic drums	fiber or plastic drums	fiber or plastic drums

S&E = stabilization & encapsulation for wastes which meet organic treatment standards, but not metals treatment standards
DLF = direct landfill for residues which meet all treatment standards

CD2F 003

0 0 6 9 5

NOTICE
If the filmed image is less clear than this Notice it is due to the quality of the document being filmed.

9. Do you accept debris? Please indicate if you accept the following types of debris, and any limitations or conditions of acceptance.

Hazardous Waste Contaminated Debris Acceptance			
Type of Debris	Accept Now (Y/N)	Plan to Accept By June 94 (Y/N)	Acceptance Conditions (e.g. particle size)
Common Cloth Materials (e.g., rags, mop heads, blankets, or clothing)	Y	Y	in filter or plastic drums - max 200#
Personal Protection Equipment (e.g., Tyvex suits)	Y	Y	" ~~max 200#~~
Paper of Cardboard Materials	Y	Y	"
Filter Cartridges	Y	Y	"
Wood Materials	Y	Y	"
Rubber Objects (e.g., tires, hoses)	Y	Y	"
PVC Pipe	Y	Y	"
Other Plastic Debris	Y	Y	"
Glass Debris	Y	Y	"
Ceramic Debris (e.g., semiconductors)	Y	Y	"
Metal Objects (e.g., pipes, valves, pumps, nuts and bolts)	Y	Y	<2 ft length <50 lb in drums
Asbestos Materials (e.g., shingles, insulation)	Y	Y	Per LAC regulations
Non-Soil Geologic Material (e.g., rocks)	Y	Y	in filter or plastic drums max 20#
Concrete Debris	Y	Y	"
Refractory Brick	Y	Y	for $ $15
Other Bricks	Y	Y	"
Slag	Y	Y	"
Intact Batteries	Y	Y	not specified so as sulphuric acid/lead
Battery Cases	Y	Y	"
Electronic Components (e.g., printed circuit boards)	Y	Y	heavy metals limitations
Electrical Wires, Switches, etc.	Y	Y	"

CD2F 003

0 6 9 6

NOTICE
If the filmed image is less clear than this Notice it is due to the quality of the document being filmed.

CD2F 003

10. Please explain any debris acceptance conditions noted on the Table #9.

1) Not to exceed 200lb/package - weight limitation
2) " " " 1 million BTU/pkg
3) must meet heavy metals acceptance guidelines
4) Treatment standards must be consistently achievable
5) plastic or fiber drums

11. Do you accept soils? If so, under what conditions or limitations?

Same as above.

0 6 9 7

NOTICE
If the filmed image is less clear than this Notice it is due to the quality of the document being filmed.

F. **Incinerator Unit Specific Capacity Sheet**

1. Unit #: [each question in Section F will be addressed for each unit]

2. Unit Type: ROTARY KILN, LODDBY (LIQUID) BURNER & AFTERBURNER

3. Thermal Rating:(M BTU/ Hour) 95,600,000 (PERMITTED HEAT RELEASE)

4. Status: Currently Operating (Y/N) Y Planned for ____ 19__

If this kiln is currently not operating, please indicate current physical and/or regulatory status (e.g. preparing permit, permit submitted, performing trial burns, kiln under construction).

5. Average operating hours per year accounting for scheduled and unscheduled "down time".
~6500 Hours/ Year

CD2F 003

0698

NOTICE
If the filmed image is less clear than this Notice it is due to the quality of the document being filmed.

6. Please describe the waste feed mechanisms used to feed RCRA hazardous wastes to this unit.

Liquids:

ATOMIZED UNDER AIR PRESSURE INTO KILN, LOOPS & AND AFTER BURNER

Pumpable Sludges:

PUMPED INTO ROTARY KILN

Nonpumpable Sludges:

NOT ACCEPTED FOR DIRECT FEED INTO UNIT - ONLY ACCEPTED AS CONTAINERIZED WASTE

Containerized Solids:

FED INTO ROTARY KILN VIA CONVEYOR BELT

CD2F 003

0 6 9 9

NOTICE
If the filmed image is less clear than this Notice it is due to the quality of the document being filmed.

6. Bulk Solids:

NOT ACCEPTED FOR INCINERATION

7. Please indicate the RCRA hazardous waste volume burned in this unit, it's permitted capacity, and practical capacity in the table below.

Type of Waste	Amount burned during first 6 months of 1991 (Tons)	Maximum Permitted Waste Capacity (Tons/ Year) or (Pounds/Hour)	Maximum Practical Waste Feed Capacity (Tons/Year) or (Pounds/Hour)
Liquids	13,140.5		
Pumpable Sludges	796		
Nonpumpable Sludges	0		
Containerized Solids	5122.5		
Bulk Solids	0		
Total	19,159	21,732 #/HR	

7a. Were the waste volumes received during the first 6 months of 1991 typical of what you expect to receive over the next year? If not, how do you expect waste volumes to change after the next 6 months? 1 year? (i.e. provide the percentage increase or decrease of each waste form that you anticipate.)

YES — SHOULD BE APPROXIMATELY THE SAME

CD2F 003

0 7 0 0

NOTICE
If the filmed image is less clear than this Notice it is due to the quality of the document being filmed.

CD2F 003

8. Please indicate the amount of RCRA hazardous waste contaminated debris and soil burned and your capacity to burn debris and soil by filling in the table below.

Type of Waste	Amount burned during first 6 months of 1991 (1991)	Maximum Permitted Waste Capacity (Tons/ Year) or (Pounds/ Hour)	Maximum Practical Waste Feed Capacity (Tons/ Year) or (Pounds/Hour)
Debris	SOIL - UNABLE TO DERIVE.	SOIL & DEBRIS	
Soils	THESE FIGURES	LIMITED BY SPLITTER	

8a. Are soil volumes and capacities of soil accounted for in the Bulk Solid category of Table #7? If not, what categories do they fall under? Please provide percentages of soil under those categories.

No - CONTAMINATED SOLIDS <5%

8b. Are debris volumes and capacities accounted for in the Bulk Solid category of Table #7? If not, what categories do they fall under? Please provide percentages of debris under those categories.

No - CONTAMINATED SOLIDS <20%

0 7 8 1

NOTICE
If the filmed image is less clear than this Notice it is due to the quality of the document being filmed.

G.

Future Capacity of Commercial Incinerators

1. What other physical changes (e.g., changes to feed systems, storage area) are planned for this facility that will change it's capacity by July, 1994? Describe the change and the resulting change in capacity by waste form (i.e. the increase or decrease by waste form.)

NONE ANTICIPATED FOR INCINERATOR — LANDFILL CAPACITY EXPECTED TO CONTINUE TO DECREASE

2. What other regulatory changes are planned for this facility that will change it's capacity.? Describe the change and the resulting change in capacity by waste form.

FINAL PART B PERMIT CONDITIONS COULD RESULT IN CAPACITY CHANGES FOR INCINERATION DUE TO OPERATING CONSTRAINTS

CD2F 003

0 7 0 2

G. **Other Factors to Determine Future Capacity of Commercial Incinerators (Ctd.)**

3. Are you prohibited from receiving any RCRA hazardous wastes from any states? If so, which states?

NO

4. Are you limited to receiving a maximum amount of RCRA hazardous waste from any states? If so, which states and what is maximum amount?

NO

NOTICE
If the filmed image is less clear than this Notice it is due to the quality of the document being filmed.

CD2F 003

0703

A. Facility Information

1. Respondent Name and Title: Todd Raba, Sales Manager
Maxine Weldman, Technical Representative

Company: ROLLINS ENVIRONMENTAL SERVICES (NJ), INC.

Phone Number: (609) 467-3100

Fax Number: (609) 467-1040

Name of Caller: _____

Date of Call: _____

Time of Call: _____

2. Number of units currently burning RCRA hazardous waste at this facility: 1

Number of units expected to shutdown by July 1994: 0

Additional units expected to come on line by July 1994: 1

Total number of units expected to burn RCRA hazardous wastes at this at the facility by July 1994: 2

3. Has this facility undergone any physical or regulatory changes in the past 2 years that have changed it's capacity? If so, briefly explain.

Installation of Direct Burn Pad

Closure of Guardhouse Drum Pad

NOTICE
If the filmed image is less clear than this Notice it is due to the quality of the document being filmed.

CD2F 003

0 7 0 4

A. Facility Information (ctd.)

4. What is the current overall utilization of this facility's incineration capacity for following physical forms of waste?

Liquids	69 %
Pumpable Sludges	5 %
Nonpumpable Sludges	-- %
Bulk Solids	-- %
Containerized Solids	26 %
Total	100 %

NOTICE: If the filmed image is less clear than this Notice it is due to the quality of the document being filmed.

CD2F 003

0 7 0 5

B. Permit Issues

1. Have you received a final RCRA Part B permit? If not, when do you expect to receive a RCRA Part B permit?

Yes

2. What other permit(s) are required (e.g. NPDES, Air Emission)? By when? What is the current status of these permit(s)?

See Attached.

NOTICE
If the filmed image is less clear than this Notice it is due to the quality of the document being filmed.

CD2F 003

0 7 0 6

B. Permit Issues (ctd.)

3. What RCRA wastes are currently permitted? If more convenient, please fax list. Are all units authorized for same RCRA codes? If not, please specify RCRA codes accepted for each unit.

See Attached.

4. Are you adding any waste codes to your permit? Which ones? When do you expect approvals?

All waste codes listed in 40 CFR 261 except "dioxin" codes. RES (NJ) is "constantly" adding waste codes as they are promulgated.

5. What types of wastes do you generally reject?

TSCA regulated waste, dioxins, explosives, radioactive, poison A's, asbestos, see attached list.

NOTICE
If the filmed image is less clear than this Notice it is due to the quality of the document being filmed.

CD2F 003

0 7 0 7

ROLLINS
ENVIRONMENTAL SERVICES

NOTICE
If the filmed image is less clear than this Notice it is due to the quality of the document being filmed.

June 24, 1991

TO: Maury Hunt

FROM: Lewis R. Schoenberger LRS

SUBJECT: List of Permits

Permit	Date Issued	Expiration Date	Required Renewal Application Date
RCRA (0809D1HP01)	03/31/90 Revised- 09/29/90 04/04/91 05/14/91	03/31/94	09/30/93
NJPDES (NJ0005240)	08/10/87	02/14/89	08/18/88 RES(NJ) submitted renewal application.
Air Permit for Incinerator/ Tank Farm - Incinerator Operating (Log No. 821118)		This will eventually supersede 68328 (listed below)	
Air Permit for Incinerator/ Tank Farm - Incinerator not Operating (040073)	08/14/79	08/12/94	05/12/94
Air Permit - Incinerator Stack (68328)	08/19/84 (With numerous 90 day extensions)	07/13/91	N/A (Temporary permit automatically renewed)
Air Permit - Tank 323 (70293)	12/18/84	06/10/96	03/10/96
Air Permit - Preaeration Tank V-203 (Log. No. 88-1679)			
Air Permit - Cooling Tower (78964)	08/27/87	08/10/95	05/10/95
Air Permit - Lime Slaker (70539)	01/18/85	01/18/95	10/18/94
Air Permit - Sludge Dryer/ Condenser (85318)	07/29/88 (With numerous 90 day extensions)	07/13/91	N/A (Temporary permit automatically renewed)

RES 50-25HS

CD2F 003

0 7 0 8

NOTICE
If the filmed image is less clear than this Notice it is due to the quality of the document being filmed.

CD2F 003

Air Permit - Hot Oil Heater (80903)	12/18/87	12/18/92	09/18/92
Air Permit - 200 HP Steam Boiler (73816)	01/17/86	01/17/96	10/17/95
Air Permit - Cooling Tower (92136)	09/07/89 (With numerous 90 day extensions)	08/27/91	N/A (Temporary permit automatically renewed)
Air Permit - T-312 (96812)	07/24/90	07/24/95	04/24/95
Air Permit - Approval to Alter T-312 (01903371)	07/27/90	07/27/91	N/A (Permit to replace T-312)
DRBC Permit - Permit for Drum Storage and Basins B104, B108, B111, B112, B113 and B122 (D69-152-1)	09/27/72	N/A	N/A
DRBC Permit - Groundwater Abatement (D69-152-2)	11/08/72	N/A	N/A
DRBC Permit - Scrubber Water and Biosystem Clarifier (D69-152-3)	07/31/74 Amended 6/17/75, 12/17/75, 12/8/76, 3/30/77, 7/1/77, 11/30/77	N/A	N/A
DRBC Permit - Groundwater Abatement Well (D70-170)	09/25/74	N/A	N/A
DRBC Permit - Surface Water Supply (D-72-49)	09/25/74	N/A	N/A
DRBC Permit - Cooling Tower and 1.2M gal Wastewater Storage Tanks (D-84-38)	09/22/87	N/A	N/A
DRBC Permit - New Clarifier and Memtek (D-88-26)	05/25/88	N/A	N/A
Water Front Development - Permit to construct kiln storage, kiln staging area, emergency water bldg., fire water tank, new truck and pump pads, storm water tank, closure of inpoundments (87-0251-1)	07/02/87	07/02/92	N/A

0709

NOTICE
If the filmed image is less clear than this Notice it is due to the quality of the document being filmed.

Stream Encroachment - Permit for earthen berm, 2 storm water outfalls, place fill and construct various buildings for incineration (13580)	07/21/87	08/07/92	A new permit application will be required by, at least, 2/7/92
Regulated Medical Waste Intermediate Handler (0809D1HP01)	05/01/91	N/A	N/A
B206 & B207 Closure Plan (NJPDES Permit 5240)	06/28/88	07/28/93	N/A
L Series Lagoon Closure Plan (NJPDES Permit 5240)	06/28/88	07/28/93	01/28/93
Guardhouse Drum Pad Closure Plan (under RCRA Permit)	04/06/90	Approx. 10/06/90 Closure is still on going. NJDEP is aware of delays. Closure responsibility shifted to 3008(h) interim measures work plan.	N/A

LRS\ne

CD2F 003

0 7 1 0

NOTICE
If the filmed image is less clear than this Notice it is due to the quality of the document being filmed.

CD2F 003

AUTHORIZED WASTES

(A) Wastes Accepted For Incineration

The permittee is authorized to accept the following hazardous wastes for storage, blending and incineration:

NJDEP Hazardous Waste Number	Description of Hazardous Waste
D001	Ignitable, not otherwise classified
D002	Corrosive, not otherwise classified
D003	Reactive, not otherwise classified The permittee shall not accept a solid waste that exhibits characteristics of reactivity if a representative sample of the waste has any of the following properties: a. It forms potentially explosive mixtures with water. b. It is capable of detonation or explosive reaction if it is subjected to a strong initiating source or if heated under confinement. c. It is readily capable of detonation or explosive decomposition or reaction at standard temperature and pressure. d. It is a forbidden explosive as defined in 49 CFR 173.51, or a Class A explosive as defined in 49 CFR 173.53 or a Class B explosive as defined in 49 CFR 173.88.
D004	Arsenic by EP Toxicity test
D005	Barium by EP Toxicity test
D006	Cadmium by EP Toxicity test
D007	Chromium by EP Toxicity test
D008	Lead by EP Toxicity test
D009	Mercury by EP Toxicity test
D010	Selenium by EP Toxicity test
D011	Silver by EP Toxicity test
D012	Endrin (1,2,3,4,10,10-hexachloro-1, 7-epoxy, 1,4,4a,5,6,7,8,8a-octahydro-1, 4-endo, endo-5,8-diamethano naphthalene) by EP Toxicity test

D013 Lindane (1,2,3,4,5,6-hexachloro-cyclohexane, gamma isomer) by EP Toxicity test

D014 Methoxychlor (1,1,1, trichloro,2,2-bis (p-methoxy phenyl)) ethane by EP Toxicity test

D015 Toxaphene ($C_{10}H_{10}Cl_8$) by EP Toxicity test

D016 2,4-D, (2,4-Dichlorophenoxy acetic acid) by EP Toxicity test

D017 2,4,5-TP Silvex (2,4,5-Trichlorophenoxypropionic acid) by EP Toxicity test

D018 - D043

F001 The following spent halogenated solvents used in degreasing; tetrachloroethylene, trichloroethylene, methylene chloride, 1,1,1-trichloroethane, carbon tetrachloride, and chlorinated fluorocarbons; all spent solvent mixtures/blends used in degreasing containing, before use, a total of 10 percent or more (by volume) of one or more of the above halogenated solvents or those solvents listed in F002, F004 and F005; and still bottoms from the recovery of these spent solvent mixtures.

F002 The following spent halogenated solvents: tetrachloroethylene, methylene chloride, trichloroethylene, 1,1,1-trichloro-1, 2-2-trifluoroethane, o-dichlorobenzene, trichlorofluoromethane, and 1,1,2-trichloroethane; all spent solvents mixtures/blends containing, before use, a total of 10 percent or more (by volume) of one or more of the above halogenated solvents or those listed in F001, F004, or F005; and the spill bottoms from the recovery of these spent solvents and spent solvent mixtures.

F003 The following spent non-halogenated solvents: xylene, acetone, ethyl acetate, ethyl benzene, ethyl ether, methyl isobutyl ketone, n-butyl alcohol, cyclohexanone, and methanol; all spent solvent mixtures/blends containing, before use, a total of 10 percent or more (by volume) of one or more of the non-halogenated solvents listed above or those solvents listed in F001, F002, F004 and F005; and the still bottoms from the recovery of these spent solvents and spent solvent mixtures.

F004 The following spent non-halogenated solvents: cresols and cresylic acid, and nitrobenzene; all spent solvent mixtures/blends containing, before use, a total of 10 percent or more (by volume) of the above non-halogenated solvents listed in F001, F002, and F005; and all still bottoms from the recovery of these spent solvents and spent solvent mixtures.

NOTICE
If the filmed image is less clear than this Notice it is due to the quality of the document being filmed.

CD2F 003

0 7 1 2

F005 The following non-halogenated solvents: toluene, methyl ethyl ketone, carbon disulfide, isobutanol, pyridine, benzene, 2-ethoxyethanol, and 2-nitropropane; all spent solvent mixtures/blends containing, before use, a total of 10 percent or more (by volume) of one or more of the non-halogenated solvents listed above or those solvents listed in F001, F002 or F004; and still bottoms from the recovery of these spent solvents and spent solvent mixtures.

F006 Wastewater treatment sludges from electroplating operations except from the following processes: (1) sulfuric acid anodizing of aluminum; (2) tin plating on carbon steel; (3) zinc plating (segregated basis) on carbon steel; (4) aluminum, or zinc-aluminum plating on carbon steel; (6) chemical etching and milling of aluminum.

F007 Spent plating bath solutions from electroplating operations.

F008 Plating bath sludges from the bottom of plating baths from electroplating operations where cyanides are used in the process.

F009 Spent stripping and cleaning and bath solutions from electroplating operations where cyanides are used in the process.

F010 Quenching bath sludge from oil baths from metal heat treating operations where cyanides are used in the process.

F011 Spent cyanide solutions from salt bath pot cleaning from metal heat treating operations.

F012 Quenching wastewater treatment sludges from metal heat treating operations where cyanides are used in the process.

F032 F034 35 37 38

K001 Bottom sediment sludge from the treatment of wastewater from wood preserving processes that use creosote and/or pentachlorophenol.

K002 Wastewater treatment sludge from the production of chrome yellow and orange pigments.

K003 Wastewater treatment sludge from the production of molybdate orange pigments.

K004 Wastewater treatment sludge from the production of zinc yellow pigments.

K005 Wastewater treatment sludge from the production of chrome green pigments.

K006 Wastewater treatment sludge from the production of chrome oxide green pigments (anhydrous and hydrated).

NOTICE
If the filmed image is less clear than this Notice it is due to the quality of the document being filmed.

CD2F 003

0 7 1 3

K007	Wastewater treatment sludge from the production of iron blue pigments.
K008	Oven residue from the production of chrome oxide green pigments.
K009	Distillation bottoms from the production of acetaldehyde from ethylene.
K010	Distillation side cuts from the production of acetaldehyde from ethylene.
K011	Bottom stream from the wastewater stripper in the production of acrylonitrile.
K013	Bottom stream from the acetonitrile column in the production of acrylonitrile.
K014	Bottom from the acetonitrile purification column in the production of acrylonitrile.
K015	Still bottoms from the distillation of benzyl chloride.
K016	Heavy ends or distillation residues from the production of carbon tetrachloride.
K017	Heavy ends (still bottoms) from the purification column in the production of epichlorohydrin.
K018	Heavy ends from fractionation in ethyl chloride production.
K019	Heavy ends from the distillation of ethylene dichloride in ethylene dichloride production.
K020	Heavy ends from the distillation of vinyl chloride in vinyl chloride monomer production.
K021	Aqueous spent antimony catalyst waste from fluoromethanes production.
K022	Distillation bottom tars from the production of phenol/acetone from cumene.
K023	Distillation lights ends from the production of phthalic anhydride from naphthalene.
K024	Distillation bottoms from the production of phthalic anhydride from naphthalene.
K025	Distillation bottoms from the production of nitro-benzene by the nitration of benzene.

NOTICE
If the filmed image is less clear than this Notice it is due to the quality of the document being filmed.

CD2F 003

0 7 1 4

K026	Stripping still tails from the production of methyl ethyl pyridines.
K027	Centrifuge and distillation residues from toluene diisocyanate production.
K028	Spent catalyst from the hydrochlorinator reactor in the production of 1,1,1-trichloroethane.
K029	Waste from the production streams stripper in the production of 1,1,1-trichloroethane.
K030	Column bottoms or heavy ends from the combined production of trichloroethylene and perchloroethylene.
K031	By-products salts generated in the production of MSMA and cacodylic acid.
K032	Wastewater treatment sludge from the production of chlordane.
K033	Wastewater and scrub water from the chlorination of cyclopentadiene in the production of chlordane.
K034	Filter solids from the filtration of hexachlorocyclopentadiene in the production of chlordane.
K035	Wastewater treatment sludges generated in the production of creosote.
K036	Still bottoms from toluene reclamation distillation in the production of disulfoton.
K037	Wastewater treatment sludges from the production of disulfoton.
K038	Wastewater from the washing and stripping of phorate production.
K039	Filter cake from the filtration of diethylphosphorodithoric acid in the production of phorate.
K040	Wastewater treatment sludge from the production of phorate.
K041	Wastewater treatment sludge from the production of toxaphene.
K042	Heavy ends or distillation residues from the distillation of tetrachlorobenzene in the production of 2,4,5-T.
K043	2,6 dichlorophenol waste from the production of 2,4-D.
K048	Dissolved air flotation (DAF) float from the petroleum refining industry.
K049	Slop oil emulsion solids from the petroleum refining industry.

NOTICE
If the filmed image is less clear than this Notice it is due to the quality of the document being filmed.

CD2F 003

0 7 1 1 5

K050	Heat exchanger bundle cleaning sludge from the petroleum refining industry.
K051	API separator sludge from the petroleum refining industry.
K052	Tank bottoms (leaded) from the petroleum refining industry.
K071	Brine purifications muds from the mercury cell process in chlorine production, where separately prepurified brine is not used.
K073	Chlorinated hydrocarbon wastes from the purification step of the diaphragm cell process using graphite anodes in chlorine production.
K083	Distillation bottoms from aniline production.
K084	Wastewater treatment sludges generated during the production of veterinary pharmaceuticals from arsenic or organo-arsenic compounds.
K085	Distillation or fractionation column bottoms from the production of chlorobenzenes.
K086	Solvent washes and sludges, caustic wastes and sludges or water washes and sludges from cleaning tubs and equipment used in the formulation of ink from pigments, driers, soaps, and stabilizers containing chromium and lead.
K087	Decanter tank tar sludge from choking operations.
K093	Distillation light ends from the production of phthalic anhydride from orthoxylene.
K094	Distillation bottoms from the production of phthalic anhydride from orthoxylene.
K095	Distillation bottoms from the production of 1,1,1-trichloroethane.
K097	Vacuum stripper discharge from the chlordane chlorinator production of chlordane.
K098	Untreated process wastewater from the production of toxaphene.
K099	Untreated wastewater from the production of 2,4-D.
K101	Distillation tar residues from the distillation of aniline-based compounds in the production of veterinary pharmaceuticals from arsenic or organo-arsenic compounds.

NOTICE
If the filmed image is less clear than this Notice it is due to the quality of the document being filmed.

CD2F 003

0 7 1 6

K102	Residue from the use of activated for decolorization in the production of veterinary pharmaceuticals from arsenic or organo-arsenic compounds.
K103	Process residues from aniline extraction from the production of aniline.
K104	Combined wastewater streams generated from nitrobenzene/aniline production.
K105	Separated aqueous stream from the reactor product washing step in the production of chlorobenzenes.
K106	Wastewater treatment sludge from the mercury cell process in chlorine production.
K111	Product wash waters from the production of dinitrotoluene via nitration of toluene.
K112	Reaction by-product water from the drying of toluenediamine via hydrogenation of dinitrotoluene.
K113	Condensed liquid light ends from purification of toluenediamine in the production of toluenediamine via hydrogenation of dinitrotoluene.
K114	Vicinals from the purification of toluenediamine in the production of toluenediamine via hydrogenation of dinitrotoluene.
K115	Heavy ends from the purification of toluenediamine in the production of toluenediamine via hydrogenation of dinitrotoluene.
K116	Organic condensate from the solvent recovery column in the production of toluene diisocyanate via phosgenation of toluenediamine.
X721	Waste automotive crankcase and lubricating oils from automotive service and gasoline stations, truck terminals and garages.
X722	Waste oil and bottom sludge generated from tank clean-outs from residential /commercial fuel oil tanks.
X723	Waste oil and bottom sludge generated by gasoline stations when gasoline and oil tanks are tested, cleaned, or replaced.
X724	Waste petroleum oil generated when tank trucks or other vehicles or mobile vessels are cleaned, including, but not limited to, oily ballast water from product transport units of boats, barges, ships or other vessels.

NOTICE
If the filmed image is less clear than this Notice it is due to the quality of the document being filmed.

CD2F 003

X725 Oil spill cleanup residue which: (A) is contaminated beyond saturation; or (B) the generator fails to demonstrate that the spill material was not one of the listed hazardous waste oils.

X726 The following used and unused waste oils; metal working oils; turbine lubricating oils; diesel lubricating oils; and quenching oils.

X728 Bottom sludge generated from the processing, blending, and treatment of waste oil in waste oil processing facilities.

NOTICE
If the filmed image is less clear than this Notice it is due to the quality of the document being filmed.

CD2F 003

0 7 1 8

All "P" and "U" hazardous wastes listed in N.J.A.C. 7:26-8.15 except for the waste specified in Condition 3(c) of Section II and the hazardous waste listed below:

P009	Ammonium picrate
P041	Phosphoric acid, diethyl p-nitrophenyl ester
P065	Fulminic acid, mercury (III) salt
P081	Nitroglycerine
P092	Phenylmercuric acetate
P112	Tetranitromethane
U050	1,2-benzphenanthiene

Non-listed, non-characteristic waste streams classified as hazardous waste by the generator or the Department because of the presence of hazardous waste constituents listed below:

C103	Acetonitrile
C104	Warfarin & Salt
C105	2-Acetylaminofluorene
C108	Acrolein
C109	Acrylamide
C110	Acrylonitrile
C111	Aflatoxins
C112	Aldrin
C113	Allyl alcohol
C115	4-Aminobiphenyl
C116	Mitomycin C
C117	5-(Aminomethyl) 3-isoxazolol
C118	4-Aminopyridine
C120	Aniline
C128	Azaserine
C131	Benz (C) acridine
C132	Benz (A) anthracene
C133	Benzene
C135	Benzenethiol
C136	Benzidine
C138	Benzo (B) fluoranthene
C139	Benzo (J) fluoranthene
C140	Benzo (A) pyrene
C141	Benzotrichloride
C142	Benzyl chloride
C144	Bis (2 chloroethoy) methane
C145	Bis (2-chloroethyl) ether
C146	Naphthylamine mustard
C147	Bis (2-chloroisopropyl) ether
C148	Bis (chloromethyl) ether
C149	Bis (2-erhylhexyl) phthalate
C150	Bromoacetone
C151	Bromomethane
C152	4-Bromophenyl phenyl ether
C156	4,6-Dinitro-O-sec-butyl phenol
C160	Carbon disulfide

NOTICE
If the filmed image is less clear than this Notice it is due to the quality of the document being filmed.

CD2F 003

0 7 1 9

C162	Chlordane (A and G isomers)
C163	Chlorinated benzenes, N.O.S.
C164	Chlorinated ethane, N.O.S.
C165	Chlorinated naphthalene, N.O.S.
C166	Chlorinated phenol, N.O.S.
C167	Chloroacetaldeyde
C168	Chloroalkyl ethers, N.O.S.
C169	P-Chloroaniline
C170	Chlorobenzene
C172	Chloroprene
C173	P-Chloro-m-cresol
C175	2-Chloroethyl vinyl ether
C176	Chloroform
C177	Chloromethane
C178	Chloromethyl methyl ether
C179	2-Chlorononaphthalene
C180	2-Chlorophenol
C181	1-(O-chloropheny) thiourea
C183	Chlorotoluene, N.O.S.
C185	Chrysene
C186	Citrus red no. 2
C188	Creosote
C189	Crotonaldehyde
C191	Cyanogen
C195	2-Cyclohexyl-4,6-dinitrophenol
C198	DDD
C199	DDE
C200	DDT
C202	Dibenz (A,H) acridine
C203	Dibenz (A,J) acridine
C204	Dibenz (A,H) anthracene
C205	7H-Dibenzo (C,G) carbozole
C206	Dibenzo (A,E) pyrene
C207	Dibenzo (A,H) pyrene
C208	Dibenzo (A,I) pyrene
C209	1,2-Dibromo-3-chloropropane
C210	1,2-Dibromethane
C211	Dibromethane
C212	Di-N-butyl phthalate
C213	Dichlorobenzene, N.O.S.
C214	3,3-Dichlorobenzidine
C215	1,1-Dichloroethane
C216	1,2-Dichloroethane
C217	Trans-1, 2-dichloroethane
C218	Dichloroethylene, N.O.S.
C219	1,1-Dichloroethylene
C220	Dichloromethane
C221	2,4, Dichlorophenol
C222	2,6-Dichlorophenol
C223	2,4-Dichlorophenoxyacetic acid (2,4-D)
C226	1,2-Dichloropropane
C227	Dichloropropanol, N.O.S.

NOTICE
If the filmed image is less clear than this Notice it is due to the quality of the document being filmed.

CD2F 003

0 1 2 0

C228	Dichloropropene, N.O.S.
C229	1,3-Dichloropropene
C230	Dieldrin
C234	1,2-Diethylhydrazine
C237	Diethyl phthalate
C246	7,12-Dimethylbenz (A) anthracene
C247	3,3-Dimethylbenzidine
C248	Dimethycarbamoyl chloride
C249	1,1-Dimethylhydrazine
C250	1,2-Dimethylhydrazine
C253	A,A-Dimethylphenethylamine
C255	Dimethyl phthalate
C256	Dimethyl sulfate
C257	Dinitrobenzene, N.O.S.
C258	4,6-Dinitro-O-cresol and salts
C262	Di-n-octyl phthalate
C263	1,4-Dioxane
C266	Di-n-propylnitrosamine
C269	Endosulfan
C270	Endrin and metabolites
C279	Fluoranthene
C281	2-Fluoroacetamide
C283	Formaldehyde
C284	Gycidyladehyde
C285	Halomethane, N.O.S.
C286	Heptachlor
C288	Hexachlorobenzene
C289	Hexachlorobutadiene
C291	Hexachlorocyclopentadiene
C292	Hexachloroethane
C294	Hexachlorophene
C295	Hexachloropropene
C297	Hydrazine
C300	Ideno (1,2,3-CD) pyrene
C310	Maleic Anhydride
C317	3-Methylchlorolanthrene
C319	Methyl ethyl ketone (MEK)
C320	Methyl hydrazine
C321	2-Methylacetonitrile
C322	Methyl methacrylate
C329	Naphthalene
C330	1,4-Naphthoquinone
C331	1-Naphthalene
C332	2-Naphthalene
C337	Nicotine and salts
C340	Nitrobenzene
C346	Nitroglycerine
C357	N-Nitrosomethylethylamine
C371	Parathion
C372	Pentachlorobenzene
C373	Pentachloroethane
C374	Pentachloronitrobenzene (PCBN)

NOTICE
If the filmed image is less clear than this Notice it is due to the quality of the document being filmed.

CD2F 003

0 7 2 1

C377	Phenol
C385	Phthalic acid ethers, N.O.S.
C386	Phthalic anhydride
C387	Polychlorinated Biphenyl, N.O.S. (less than fifty (50) ppm)
C396	Pyridine
C398	Saccharin
C406	Sodium Cyanide
C410	1,2,4,5-Tetrachlorobenzene
C412	Tetrachloroethane, N.O.S.
C413	1,1,1,2-Tetrachloroethane
C414	1,1,2,2-Tetrachloroethane
C415	TETC (Tetrachloroethylene)
C416	Tetrachloromethane
C417	2,3,4,6-Tetrachlorophenol
C419	Tetraethyl lead
C433	Toluene
C434	Toluene diamine
C436	Toluene diisocyanate
C437	Toxaphene
C438	Tribromomethane
C439	1,2,4-Trichlorobenzene
C440	1,1,1-Trichloroethane
C441	1,1,2-Trichloroethane
C442	TRIC (Trichloroethylene)
C443	Trichloromethanethiol
C448	Trichloropropane, N.O.S.
C449	1,2,3-Trichloropropane
C459	Vinyl chloride
C463	Acetophenone
C464	Benzene (dichloromethyl)
C465	Butyl benzyl phthalate
C467	Chlorinated fluorocarbons, N.O.S.
C468	Cresol
C469	1,4-Dichloro-2 butene
C470	Dichlorodifluoromethane
C472	Ethyl methacrylate
C477	Isobutyl alcohol
C480	Methacrylonitrile
C483	Paraldehyde
C488	Tetrachlorodibenzofurans
C490	Trichloromonofluoromethane
C491	Trypan blue
C492	O-Dichlorobenzene
C493	M-Dichlorobenzene
C494	P-Dichlorobenzene
C497	3-Chloropropene

NOTICE
If the filmed image is less clear than this Notice it is due to the quality of the document being filmed.

CD2F.003

0 7 2 2

NOTICE
If the filmed image is less clear than this Notice it is due to the quality of the document being filmed.

CD2F 003

(B) Management of Non-Hazardous Wastes

1) The permittee is authorized to accept and incinerate the following non-hazardous wastes:

NJDEP Waste Number	Description of Waste
X900	Non-hazardous-Liquid waste: N.O.S.
X905	Non-hazardous-Gas waste: N.O.S.
X910	Non-Hazardous-Solid waste: N.O.S.

2) All non-hazardous wastes listed in Condition 3 (B) 1 above shall be managed as hazardous wastes in full compliance with N.J.A.C. 7:26-1 et seq. and the terms of this permit, except the non-hazardous storage areas authorized in Condition 2 (A) 9, Section II.

3) All shipments of non-hazardous wastes shall be accompanied by a completed hazardous waste manifest, using the NJDEP authorized non-hazardous waste numbers listed in Condition 3 (B) 1 above.

4) On-site storage of non-hazardous wastes shall be counted toward the permittee's authorized storage capacity.

5) The permittee shall not accept or incinerate Class C explosives as defined in 49 CFR 173.100.

(C) Wastes Accepted for Transfer Only

The permittee is authorized to accept containers of the following hazardous wastes in addition to the wastes listed in Condition 3 (A) Section II, for storage for periods of one hundred eighty (180) days or less, and subsequent transfer of the containers to an authorized off-site hazardous waste facility:

P010	Arsenic
P011	Arsenic pentoxide
P012	Arsenic trioxide
P015	Beryllium dust
P087	Osmium oxide
P107	Strontium sulfide
P113	Thallic oxide
P114	Thallium (I) selenide
P115	Thallium (I) sulfide
P119	Vanadic acid, ammonium salt
P120	Vanadium pentoxide
P122	Zinc phosphide (concentration greater than 10%)
U032	Chromic acid, calcium salt
U134	Hydrofluoric acid
U135	Hydrogen sulfide

0 7 2 3

U151	Mercury
U189	Phosphorus sulfide
U203	Safrole
U204	Selenious acid
U215	Thallium (I) carbonate
U216	Thallium (I) chloride
U217	Thallium (I) nitrate

The permittee shall store these wastes only in their original containers and shall not remove the wastes from their original containers unless a damaged container needs to be over-packed.

(d) The permittee shall not accept wastes containing polychlorinated biphenyls (PCBs) at a concentration greater than fifty (50) parts per million or greater than any future concentration limit set by Federal Agencies or the Department.

NOTICE
If the filmed image is less clear than this Notice it is due to the quality of the document being filmed.

CD2F 003

0 7 2 4

NOT ACCEPTABLE AT RES(NJ)

D003E
D006CB
D008LB
D009HM
F019
F020
F021
F022
F023
F024
F025
F026
F027
F028
K028
K043
K044
K045
K046
K047
K060
K061HZ
K061LZ
K062
K069CS
K069NCS
K071HM
K071LM
K096
K099
K100
K106HM
K106LM
P009
P010
P011
P012
P015
P019
P041
P056
P065HM
P065LM
P076
P078
P081
P087
P092HM
P092LM
P107
P112
P113
P114
P115
P119
P120
P122
U032
U050
U134
U135
U151HM
U151LM
U189
U203
U204
U205
U214
U215
U216
U217

CB - Cadmium Battery
CS - Calcium Sulfate
E - Explosive
HM - High Mercury (>=260mg/kg) (>=16mg/kg for K071)
HZ - High Zinc (>15%)
LM - Low Mercury (<260 mg/kg) (<16mg/kg for K071)
LZ - Low Zinc (<15%)
NCS - Non-Calcium Sulfate

NOTICE
If the filmed image is less clear than this Notice it is due to the quality of the document being filmed.

CD2F 003

0125

C. Constituent Limitations/ Maximum Feed Rates

1. Do you accept brominated wastes (e.g., activated alumina containing ethylene dibromide or phenolic polymers containing methyl bromide)? What is your maximum bromine limit (e.g., pounds per hour or maximum concentration in feed)?

Not accepted at this time.

D. Container types that can be Received at the Facility

1. Do you accept liquids, pumpable sludges, nonpumpable sludges, and solids in the following forms?

Container Type	Liquid	Pumpable Sludge	Nonpumpable Sludge	Solid
Lab Pack	Y	Y	Y	Y
Drums (What Sizes?)	20, 30, 40 55	20, 30, 40, 55	20, 30, 40, 55	20, 30, 40, 55
Cubic Yard Box	N	N	N	N
Cubic Yard Bag	N	N	N	N
Roll-off	N	N	N	N
Dumptrailer	N	N	N	N
Tanker	Y	Y	N	N
Pressure Tanker (Cusco)				
Railcar	N	N	N	N
Barge	N	N	N	N
Other (Specify)		Y		
		auger sludge trucks		

NOTICE
If the filmed image is less clear than this Notice it is due to the quality of the document being filmed.

CD2F 003

0 7 2 6

9. Do you accept debris? Please indicate if you accept the following types of debris, and any limitations or conditions of acceptance.

Hazardous Waste Contaminated Debris Acceptance			
Type of Debris	Accept Now (Y/N)	Plan to Accept By June 94 (Y/N)	Acceptance Conditions (e.g. particle size)
Common Cloth Materials (e.g., rags, mop heads, blankets, or clothing)	Y		
Personal Protection Equipment (e.g., Tyvex suits)	Y		
Paper or Cardboard Materials	Y		
Filter Cartridges	Y		
Wood Materials	Y		
Rubber Objects (e.g., tires, hoses)	Y		
PVC Pipe	Y		
Other Plastic Debris	Y		
Glass Debris	Y		
Ceramic Debris (e.g., semiconductors)	Y		
Metal Objects (e.g., pipes, valves, pumps, nuts and bolts)	Y		metals limits, must be certain size
Asbestos Materials (e.g., shingles, insulation)	N		
Non-Soil Geologic Material (e.g., rocks)	Y		
Concrete Debris	Y		
Refractory Brick	Y		
Other Bricks	Y		
Slag	Y		
Intact Batteries	Y		no nickel, lead, zinc
Battery Cases	Y		
Electronic Components (e.g., printed circuit boards)	Y		
Electrical Wires, Switches, etc.	Y		

NOTICE
If the filmed image is less clear than this Notice it is due to the quality of the document being filmed.

CD2F 003

0 7 7 1

NOTICE
If the filmed image is less clear than this. Notice it is due to the quality of the document being filmed.

CD2F 003

0 7 2 8

10. Please explain any debris acceptance conditions noted on the Table #9.

11. Do you accept soils? If so, under what conditions or limitations?

Yes. Must be containerezed and within permit limitations.

NOTICE
If the filmed image is less clear than this Notice it is due to the quality of the document being filmed.

F. **Incinerator Unit Specific Capacity Sheet**

1. Unit #: [each question in Section F will be addressed for each unit] *

2. Unit Type: Combination rotary kiln/liquid injection incinerator.

3. Thermal Rating:(M BTU/ Hour) 35/70

4. Status: Currently Operating (Y/N) Y Planned for _____ 19___

If this unit is currently not operating, please indicate current physical and/or regulatory status (e.g. preparing permit, permit submitted, performing trial burns, unit under construction).

5. Average operating hours per year accounting for scheduled and unscheduled "down time".
Confidential Hours/ Year

* Rotary reactor type unit has been approved in the site Part B and will be on line in 1993. Unit will handle low BTU solids/sludges.

CD2F 003

0129

6. Please describe the waste feed mechanisms used to feed RCRA hazardous wastes to this unit.

Liquids:

T-OX into afterburner.
Aspirated from tank farm.
Direct burn from tanker.

Pumpable Sludges:

PDP

Nonpumpable Sludges:

Direct kiln via convevor and elevator.

Containerized Solids:

Direct kiln via convevor and elevator.

NOTICE
If the filmed image is less clear than this Notice it is due to the quality of the document being filmed.

CD2F 003

0 7 7 0

NOTICE
If the filmed image is less clear than this Notice it is due to the quality of the document being filmed.

CD2F 003

6. Bulk Solids:

Currently not accepting bulk solids.

7. Please indicate the RCRA hazardous waste volume burned in this unit, it's permitted capacity, and practical capacity in the table below.

Type of Waste	Amount burned during first 6 months of 1991 (Tons)	Maximum Permitted Waste Capacity (Tons/ Year) or (Pounds/Hour)	Maximum Practical Waste Feed Capacity (Tons/Year) or (Pounds/Hour)
Liquids	26,457,000	Pounds per Hour	Pounds per Hour
Pumpable Sludges	2,532,000	Kiln 7,000	Kiln 10,000
Nonpumpable Sludges	*	Loddby 6,875	Loddby 7,000
Containerized Solids	9,016,000	Afterburner 4,800	Afterburner 5,000
Bulk Solids	Not Accepted	MAXIMUM TOTAL CAPACITY 15,575	TOTAL 22,000
Total	38,005,000		

7a. Were the waste volumes received during the first 6 months of 1991 typical of what you expect to receive over the next year? If not, how do you expect waste volumes to change after the next 6 months? 1 year? (i.e. provide the percentage increase or decrease of each waste form that you anticipate.)

Yes.

* Non-pumpable sludges are accepted in containers, but are solidified and disposed of as a containerized solid.

8. Please indicate the amount of RCRA hazardous waste contaminated debris and soil burned and your capacity to burn debris and soil by filling in the table below.

Type of Waste	Amount burned during first 6 months of 1991 (1991)	Maximum Permitted Waste Capacity (Tons/ Year) or (Pounds/ Hour)	Maximum Practical Waste Feed Capacity (Tons/ Year) or (Pounds/Hour)
Debris			
Soils	776,926		

8a. Are soil volumes and capacities of soil accounted for in the Bulk Solid category of Table #7? If not, what categories do they fall under? Please provide percentages of soil under those categories.

No bulk solid, but containerized solids.

8b. Are debris volumes and capacities accounted for in the Bulk Solid category of Table #7? If not, what categories do they fall under? Please provide percentages of debris under those categories.

No bulk solid, but containerized solids.

NOTICE
If the filmed image is less clear than this Notice it is due to the quality of the document being filmed.

CD2F 003

0 1 1 1 2

G. **Future Capacity of Commercial Incinerators**

1. What other physical changes (e.g., changes to feed systems, storage area) are planned for this facility that will change it's capacity by July, 1994? Describe the change and the resulting change in capacity by waste form (i.e. the increase or decrease by waste form.)

Construction of a direct aspiration station; Construction of a 3,000 drum warehouse; Construction of a rotary reactor and associated feed systems - solid/sludge thermal processing unit (will add 35,000 tons per year of capacity); Construction of a new tank farm; Construction of a rail spur.

2. What other regulatory changes are planned for this facility that will change it's capacity.? Describe the change and the resulting change in capacity by waste form.

See above.

NOTICE
If the filmed image is less clear than this Notice it is due to the quality of the document being filmed.

CD2F 003

0 7 1 1 3

G. **Other Factors to Determine Future Capacity of Commercial Incinerators (Ctd.)**

3. Are you prohibited from receiving any RCRA hazardous wastes from <u>any</u> states? If so, which states?

No restrictions on out-of-state receipts.

4. Are you limited to receiving a maximum amount of RCRA hazardous waste from any states? If so, which states and what is maximum amount?

None.

NOTICE
If the filmed image is less clear than this Notice it is due to the quality of the document being filmed.

CD2F 003

0 7 3 4

NOTICE
If the filmed image is less clear than this Notice it is due to the quality of the document being filmed.

CD2F 003

A. Facility Information

1. Respondent Name and Title: Mr. Rusty Dunn Environmental Manager

Company: Rollins Environmental Services, (Deer Park Texas)

Phone Number: (713) 930-2480

Fax Number: (713) 478-2108

Name of Caller: Prakash Ramaswamy

Date of Call: August 14, 1991

Time of Call: 11:40 AM - 12:15 PM

2. Number of units currently burning RCRA hazardous waste at this facility: 5 2 RK, 1 Fluidized Bed Rotary Reactor, 2 Afterburners (Liquids)

Number of units expected to shutdown by July 1994: 0

Additional units expected to come on line by July 1994: 0

Total number of units expected to burn RCRA hazardous wastes at this at the facility by July 1994: 5

3. Has this facility undergone any physical or regulatory changes in the past 2 years that have changed it's capacity? If so, briefly explain.

1989 Rotary Reactor was brought on line. Information about this unit will be in this form.

0 7 1 5

NOTICE
If the filmed image is less clear than this Notice it is due to the quality of the document being filmed.

A. Facility Information (ctd.)

4. What is the current overall utilization of this facility's incineration capacity for following physical forms of waste?

Liquids	_____%
Pumpable Sludges	_____%
Nonpumpable Sludges	_____%
Bulk Solids	_____%
Containerized Solids	_____%
Total	_____%

Did not know. Permits does not specify what can be physical state primarily are allowed to be burned. Looking at specific kilns date, have it looks like 50-55% of wastes burned are solid/sludges

CD2F 003

0 7 7 6

B. **Permit Issues**

1. Have you received a final RCRA Part B permit? If not, when do you expect to receive a RCRA Part B permit?

yes, ~~they~~ Rollins has a Part B Permit

2. What other permit(s) are required (e.g. NPDES, Air Emission)? By when? What is the current status of these permit(s)?

NPDES
State of Texas Waste Water Discharge Permit

Misc. Air Emissions is incorporated into Final Part B Permit

NPDES - State Permit are final they at this time do not require revisions

NOTICE
If the filmed image is less clear than this Notice it is due to the quality of the document being filmed.

CD2F 003

0 7 3 7

NOTICE
If the filmed image is less clear than this Notice it is due to the quality of the document being filmed.

CD2F 003

0 7 3 8

B. Permit Issues (ctd.)

3. What RCRA wastes are currently permitted? If more convenient, please fax list. Are all units authorized for same RCRA codes? If not, please specify RCRA codes accepted for each unit.

All RCRA codes except for 7 Dioxin wastes: F020-F023, F026, F027, F028

4. Are you adding any waste codes to your permit? Which ones? When do you expect approvals?

Trying to obtain Dioxin codes F020-F023, F026-F028 and since those approved shortly later this year or next year

5. What types of wastes do you generally reject?

Dioxins - Dioxin bearing compounds explosives radioactive cadavers water or reactives

C. Constituent Limitations/ Maximum Feed Rates

1. Do you accept brominated wastes (e.g., activated alumina containing ethylene dibromide or phenolic polymers containing methyl bromide)? What is your maximum bromine limit (e.g., pounds per hour or maximum concentration in feed)?

Yes, Rollins Deerpark [illegible] accept Brominated waste. No permit or operational restrictions

D. Container types that can be Received at the Facility

1. Do you accept liquids, pumpable sludges, nonpumpable sludges, and solids in the following forms?

Container Type	Liquid	Pumpable Sludge	Nonpumpable Sludge	Solid
Lab Pack	✓	✓	✓	✓
Drums (What Sizes?) 5gall - 55gal	✓	✓	✓	✓
Cubic Yard Box			✓	✓
Cubic Yard Bag				✓
Roll-off			✓	✓
Dumptrailer			✓	✓
Tanker	✓	✓		
Pressure Tanker (Cusco)	✓	✓		
Railcar	✓			
Barge				
Other (Specify)				

NOTICE
If the filmed image is less clear than this Notice it is due to the quality of the document being filmed.

CD2F 003

0719

9. Do you accept debris? Please indicate if you accept the following types of debris, and any limitations or conditions of acceptance.

Hazardous Waste Contaminated Debris Acceptance			
Type of Debris	Accept Now (Y/N)	Plan to Accept By June 94 (Y/N)	Acceptance Conditions (e.g. particle size)
Common Cloth Materials (e.g., rags, mop heads, blankets, or clothing)	Y	Y	See section #10
Personal Protection Equipment (e.g., Tyvex suits)	Y	Y	
Paper or Cardboard Materials	Y	Y	
Filter Cartridges	Y	Y	
Wood Materials	Y	Y	
Rubber Objects (e.g., tires, hoses)	Y	Y	
PVC Pipe	Y	Y	
Other Plastic Debris	Y	Y	
Glass Debris	Y	Y	
Ceramic Debris (e.g., semiconductors)	Y	Y	
Metal Objects (e.g., pipes, valves, pumps, nuts and bolts)	Y	Y	
Asbestos Materials (e.g., shingles, insulation)	N	N	
Non-Soil Geologic Material (e.g., rocks)	Y	Y	
Concrete Debris	Y	Y	
Refractory Brick	Y	Y	
Other Bricks	Y	Y	
Slag	Y	Y	
Intact Batteries	N	N	
Battery Cases	N	N	
Electronic Components (e.g., printed circuit boards)	Y	Y	
Electrical Wires, Switches, etc.	Y	Y	

NOTICE
If the filmed image is less clear than this Notice it is due to the quality of the document being filmed.

CD2F 003

0 7 4 0

NOTICE
If the filmed image is less clear than this Notice it is due to the quality of the document being filmed.

10. Please explain any debris acceptance conditions noted on the Table #9.

All debris must be able to fit in 85 gallon Drum.

11. Do you accept soils? If so, under what conditions or limitations?

Yes, Billing accept soil in containerized and Bulk quantity. Only limitation is it contains chemical explosive or radioactives. All Bulk soil go to System D which has the Fluidize Bed Rotary Reactor.

CD2F 003

0 7 4 1

F. **Incinerator Unit Specific Capacity Sheet**

1. Unit #: [each question in Section F will be addressed for each unit]

2. Unit Type: System #1 Rotary Kiln / with Lobby Liquid Fired Afterburner

3. Thermal Rating:(M BTU/ Hour) 180 M BTU / hr - Rotary kiln 100 MBTU Afterburner 80 MBT

4. Status: Currently Operating (Y/N) ✓ Planned for _____ 19___

If this kiln is currently not operating, please indicate current physical and/or regulatory status (e.g. preparing permit, permit submitted, performing trial burns, kiln under construction).

5. Average operating hours per year accounting for scheduled and unscheduled "down time". 7426 Hours/ Year

85% (open 7 days, 24 hours/day)

NOTICE
If the filmed image is less clear than this Notice it is due to the quality of the document being filmed.

CD2F 003

0 7 4 2

6. Please describe the waste feed mechanisms used to feed RCRA hazardous wastes to this unit.

Liquids:

Atomizing Air Gun feeds liquid

Pumpable Sludges:

Concrete Pump (did not have Flow Rate on hand)

Nonpumpable Sludges:

Repacked into Drums & then placed into Elevator Feed

Containerized Solids:

Elevator Feed

NOTICE
If the filmed image is less clear than this Notice it is due to the quality of the document being filmed.

CD2F 003

0743

NOTICE
If the filmed image is less clear than this Notice it is due to the quality of the document being filmed.

6. Bulk Solids:

N/A

7. Please indicate the RCRA hazardous waste volume burned in this unit, it's permitted capacity, and practical capacity in the table below. for System #1

Type of Waste	Amount burned during first 6 months of 1991 (Tons)	Maximum Permitted Waste Capacity (Tons/ Year) or (Pounds/Hour)	Maximum Practical Waste Feed Capacity (Tons/Year) or (Pounds/Hour)
Liquids	12750 Tons	N/A	11700 lb/hr est
Pumpable Sludges	12750 Tons	N/A	11700 lb/hr est
Nonpumpable Sludges		N/A	
Containerized Solids		N/A	
Bulk Solids	none	N/A	
Total	25500 Tons	23400 lb/hr (13400 lb/hr RK, 8000 lb/hr AF)	23400 lb/hr

He did not have actual numbers but estimate that 50% solid sludge & was ratio that was fed in.

7a. Were the waste volumes received during the first 6 months of 1991 typical of what you expect to receive over the next year? If not, how do you expect waste volumes to change after the next 6 months? 1 year? (i.e. provide the percentage increase or decrease of each waste form that you anticipate.)

yes

CD2F 003

0 7 4 4

8. Please indicate the amount of RCRA hazardous waste contaminated debris and soil burned and your capacity to burn debris and soil by filling in the table below.

Type of Waste	Amount burned during first 6 months of 1991 (1991)	Maximum Permitted Waste Capacity (Tons/ Year) or (Pounds/ Hour)	Maximum Practical Waste Feed Capacity (Tons/ Year) or (Pounds/Hour)
Debris	est. 640 Tons	N/A	N/A
Soils	est. 3190 Tons	N/A	N/A

8a. Are soil volumes and capacities of soil accounted for in the Bulk Solid category of Table #7? If not, what categories do they fall under? Please provide percentages of soil under those categories.

yes Contaminated Soil makes up 85% of all solid

8b. Are debris volumes and capacities accounted for in the Bulk Solid category of Table #7? If not, what categories do they fall under? Please provide percentages of debris under those categories.

yes, Debris makes up 5% of all solid

NOTICE
If the filmed image is less clear than this Notice it is due to the quality of the document being filmed.

CD2F 003

0 7 4 5

X

NOTICE
If the filmed image is less clear than this Notice it is due to the quality of the document being filmed.

F. **Incinerator Unit Specific Capacity Sheet**

1. Unit #: [each question in Section F will be addressed for each unit]

2. Unit Type: System #2 Rotary Kiln / Fluidized Bed Rotary Reactor / Loddby L. Afterburn

3. Thermal Rating:(M BTU/ Hour) 213,000,000 BTU / Hour
RK: 80 MBT
RR: 36 MBTU
AF: 100 MBT

4. Status: Currently Operating (Y/N) ✓ Planned for _____ 19___

If this kiln is currently not operating, please indicate current physical and/or regulatory status (e.g. preparing permit, permit submitted, performing trial burns, kiln under construction).

5. Average operating hours per year accounting for scheduled and unscheduled "down time".
7426 Hours/ Year

85% (open 7 days 24 hours/day)

CD2F 003

0 7 4 6

NOTICE
If the filmed image is less clear than this Notice it is due to the quality of the document being filmed.

6. Please describe the waste feed mechanisms used to feed RCRA hazardous wastes to this unit.

Liquids:

Atomizing Air Gun feeds liquid

Pumpable Sludges:

Concrete Pump -

Nonpumpable Sludges:

Repacked into drums, placed into elevator feed or put into Fluidized Bed Rotary Reactor

Containerized Solids:

Elevator Feed

CD2F 003

0 7 4 7

NOTICE
If the filmed image is less clear than this Notice it is due to the quality of the document being filmed.

6. Bulk Solids:

Clamshell / Shredder for Fluidized Bed Rotary Reactor only!

7. Please indicate the RCRA hazardous waste volume burned in this unit, it's permitted capacity, and practical capacity in the table below. For System #2

Type of Waste	Amount burned during first 6 months of 1991 (Tons)	Maximum Permitted Waste Capacity (Tons/ Year) or (Pounds/Hour)	Maximum Practical Waste Feed Capacity (Tons/Year) or (Pounds/Hour)
Liquids	11,900 Tons	N/A	11,200 lb/hr
Pumpable Sludges	22,100	N/A	20,800 lb/hr (est)
Nonpumpable Sludges		N/A	
Containerized Solids		N/A	
Bulk Solids		N/A	
Total	34000 Tons	32,000 lb/hr	32,000 lb/hr

T 8000 lb/hr RK
12000 lb/hr RK
8000 lb/hr AF

7a. Were the waste volumes received during the first 6 months of 1991 typical of what you expect to receive over the next year? If not, how do you expect waste volumes to change after the next 6 months? 1 year? (i.e. provide the percentage increase or decrease of each waste form that you anticipate.)

For this system 65% solid/sludge 35% liquid
This ratio will not change

CD2F 003

0748

8. Please indicate the amount of RCRA hazardous waste contaminated debris and soil burned and your capacity to burn debris and soil by filling in the table below.

Type of Waste	Amount burned during first 6 months of 1991 (1991)	Maximum Permitted Waste Capacity (Tons/ Year) or (Pounds/ Hour)	Maximum Practical Waste Feed Capacity (Tons/ Year) or (Pounds/Hour)
Debris	1,105 Tons	N/A	N/A
Soils	5,525 Tons		

8a. Are soil volumes and capacities of soil accounted for in the Bulk Solid category of Table #7? If not, what categories do they fall under? Please provide percentages of soil under those categories.

yes 85% of all solid is soil

8b. Are debris volumes and capacities accounted for in the Bulk Solid category of Table #7? If not, what categories do they fall under? Please provide percentages of debris under those categories.

yes 5% of all solid is debris

NOTICE
If the filmed image is less clear than this Notice it is due to the quality of the document being filmed.

CD2F 003

0749

NOTICE
If the filmed image is less clear than this Notice it is due to the quality of the document being filmed.

G.

Future Capacity of Commercial Incinerators

1. What other physical changes (e.g., changes to feed systems, storage area) are planned for this facility that will change it's capacity by July, 1994? Describe the change and the resulting change in capacity by waste form (i.e. the increase or decrease by waste form.)

Implement system (e.g. gas injection) to so that Rollins can accept pressurized cylinders. There are no changes that will affect capacity for liquids/sludge/solid in the next 3 years.

2. What other regulatory changes are planned for this facility that will change it's capacity.? Describe the change and the resulting change in capacity by waste form.

None. The facility is permitted to construct another Fluidized Bed Rotary Reactor, but it will not be constructed before July 1994

CD2F 003

0 7 5 0

G. **Other Factors to Determine Future Capacity of Commercial Incinerators (Ctd.)**

3. Are you prohibited from receiving any RCRA hazardous wastes from <u>any</u> states? If so, which states?

no

4. Are you limited to receiving a maximum amount of RCRA hazardous waste from any states? If so, which states and what is maximum amount?

no

NOTICE
If the filmed image is less clear than this Notice it is due to the quality of the document being filmed.

CD2F 003

0 7 5 1

A. Facility Information

1. Respondent Name and Title: Eric Chohan Supervisor Marketing Research

Company: Ross Incineration Services

Phone Number: (916) 748-2200

Fax Number: (916) 748-1399

Name of Caller: Prakash Ramaswamy

Date of Call: August 06, 1991

Time of Call: 11:30 AM - 12:25 PM (EST)

2. Number of units currently burning RCRA hazardous waste at this facility: 1

Number of units expected to shutdown by July 1994: 0

Additional units expected to come on line by July 1994: 0

Total number of units expected to burn RCRA hazardous wastes at this at the facility by July 1994: 1

3. Has this facility undergone any physical or regulatory changes in the past 2 years that have changed it's capacity? If so, briefly explain.

Currently Replacing old unit with new unit. Sludge/solid capacity will increase but overall (total) capacity will remain the same.

NOTICE
If the filmed image is less clear than this Notice it is due to the quality of the document being filmed.

CD2F 003

0152

A. Facility Information (ctd.)

4. What is the current overall utilization of this facility's incineration capacity for following physical forms of waste? CBI

Liquids _____%
Pumpable Sludges _____%
Nonpumpable Sludges _____%
Bulk Solids _____%
Containerized Solids _____%
Total _____%

NOTICE
If the filmed image is less clear than this Notice it is due to the quality of the document being filmed.

CD2F 003

0 7 5 3

B. Permit Issues

1. Have you received a final RCRA Part B permit? If not, when do you expect to receive a RCRA Part B permit?

Received Federal Part B in August 1988
Operating on state Interim status; expect permit in June 1992

2. What other permit(s) are required (e.g. NPDES, Air Emission)? By when? What is the current status of these permit(s)?

Ohio state Air Permits for the following:
Incinerator unit
Tank Farms
Condenser Equipment
Sandblasting unit

NOTICE
If the filmed image is less clear than this Notice it is due to the quality of the document being filmed.

CD2F 003

0 7 5 4

B. Permit Issues (ctd.)

3. What RCRA wastes are currently permitted? If more convenient, please fax list. Are all units authorized for same RCRA codes? If not, please specify RCRA codes accepted for each unit.

Of the new codes: D018-D043

4. Are you adding any waste codes to your permit? Which ones? When do you expect approvals?

F037, F038; expected October, 1991
K117 - etc., dependent on market conditions and difficulty of approvals from the state.

5. What types of wastes do you generally reject?

At this time, F037, F038, K117, K118, K123-K126, K131, K132, K136, K141-K145, K147, K148
PCBs > 50ppm, Radioactive, mixed, medical, infectious, pressurized cylinders, Asbestos

NOTICE
If the filmed image is less clear than this Notice it is due to the quality of the document being filmed.

CD2F 003

0155

C. Constituent Limitations/ Maximum Feed Rates

1. Do you accept brominated wastes (e.g., activated alumina containing ethylene dibromide or phenolic polymers containing methyl bromide)? What is your maximum bromine limit (e.g., pounds per hour or maximum concentration in feed)?

Yes, no specified permit limit, but usually take no more than 5% (total) bromine per wastestream. If particular wastestreams >5%, generator may be requested to repack into smaller quantities.

D. Container types that can be Received at the Facility

1. Do you accept liquids, pumpable sludges, nonpumpable sludges, and solids in the following forms?

Container Type	Liquid	Pumpable Sludge	Nonpumpable Sludge	Solid
Lab Pack	✓	✓	✓	✓
Drums (What Sizes?)	✓	✓	✓	✓
Cubic Yard Box			✓	✓
Cubic Yard Bag			✓	✓
Roll-off		✓	✓	✓
Dumptrailer			✓	✓
Tanker	✓	✓		
Pressure Tanker (Cusco)	✓	✓		
Railcar				
Barge				
Other (Specify)				
Pallets	✓	✓	✓	✓
mesh screen cages	For	Aerosols	only	

NOTICE
If the filmed image is less clear than this Notice it is due to the quality of the document being filmed.

CD2F 003

0156

NOTICE
If the filmed image is less clear than this Notice it is due to the quality of the document being filmed.

CD2F 003

0 7 5 7

9. Do you accept debris? Please indicate if you accept the following types of debris, and any limitations or conditions of acceptance.

Hazardous Waste Contaminated Debris Acceptance			
Type of Debris	Accept Now (Y/N)	Plan to Accept By June 94 (Y/N)	Acceptance Conditions (e.g. particle size)
Common Cloth Materials (e.g., rags, mop heads, blankets, or clothing)	Y	Y	see next page
Personal Protection Equipment (e.g., Tyvex suits)	Y	Y	
Paper or Cardboard Materials	Y	Y	
Filter Cartridges	Y	Y	
Wood Materials	Y	Y	
Rubber Objects (e.g., tires, hoses)	Y	Y	
PVC Pipe	Y	Y	
Other Plastic Debris	Y	Y	
Glass Debris	Y	Y	
Ceramic Debris (e.g., semiconductors)	N	N	
Metal Objects (e.g., pipes, valves, pumps, nuts and bolts)	Y	Y	
Asbestos Materials (e.g., shingles, insulation)	N	N	
Non-Soil Geologic Material (e.g., rocks)	Y	Y	
Concrete Debris	Y	Y	
Refractory Brick	Y	Y	
Other Bricks	Y	Y	
Slag	Y	Y	
Intact Batteries	N	N	
Battery Cases	N	N	
Electronic Components (e.g., printed circuit boards)	N	N	
Electrical Wires, Switches, etc.	N	N	

10. Please explain any debris acceptance conditions noted on the Table #9.

All debris must be smaller than 3'x3'x3' and less than 60 pounds in weight.

11. Do you accept soils? If so, under what conditions or limitations?

Yes currently accepting in 55gallon containers. Bulk soils must be repacked into drums. With new unit on line, soil may be repacked into 3'x3'x3' Boxes

NOTICE
If the filmed image is less clear than this Notice it is due to the quality of the document being filmed.

CD2F 003

0158

F. **Incinerator Unit Specific Capacity Sheet**

1. Unit #: [each question in Section F will be addressed for each unit] CBI

2. Unit Type: CBI

3. Thermal Rating:(M BTU/ Hour) CBI

4. Status: Currently Operating (Y/N) _____ Planned for _____ 19___

If this kiln is currently not operating, please indicate current physical and/or regulatory status (e.g. preparing permit, permit submitted, performing trial burns, kiln under construction).

CBI

5. Average operating hours per year accounting for scheduled and unscheduled "down time".
CBI Hours/ Year

NOTICE
If the filmed image is less clear than this Notice it is due to the quality of the document being filmed.

CD2F 003

0759

6. Please describe the waste feed mechanisms used to feed RCRA hazardous wastes to this unit. CBI

Liquids:

CBI

Pumpable Sludges:

CBI

Nonpumpable Sludges:

CBI

Containerized Solids:

CBI

NOTICE
If the filmed image is less clear than this Notice it is due to the quality of the document being filmed.

CD2F 003

0 7 6 0

NOTICE
If the filmed image is less clear than this Notice it is due to the quality of the document being filmed.

6. Bulk Solids:

CBI

7. Please indicate the RCRA hazardous waste volume burned in this unit, it's permitted capacity, and practical capacity in the table below. CBI

Type of Waste	Amount burned during first 6 months of 1991 (Tons)	Maximum Permitted Waste Capacity (Tons/ Year) or (Pounds/Hour)	Maximum Practical Waste Feed Capacity (Tons/Year) or (Pounds/Hour)
Liquids			
Pumpable Sludges			
Nonpumpable Sludges			
Containerized Solids			
Bulk Solids			
Total			

7a. Were the waste volumes received during the first 6 months of 1991 typical of what you expect to receive over the next year? If not, how do you expect waste volumes to change after the next 6 months? 1 year? (i.e. provide the percentage increase or decrease of each waste form that you anticipate.)

CBI

CD2F 003

0 7 6 1

8. Please indicate the amount of RCRA hazardous waste contaminated debris and soil burned and your capacity to burn debris and soil by filling in the table below. CBI

Type of Waste	Amount burned during first 6 months of 1991 (1991)	Maximum Permitted Waste Capacity (Tons/ Year) or (Pounds/ Hour)	Maximum Practical Waste Feed Capacity (Tons/ Year) or (Pounds/Hour)
Debris			
Soils			

8a. Are soil volumes and capacities of soil accounted for in the Bulk Solid category of Table #7? If not, what categories do they fall under? Please provide percentages of soil under those categories.

CBI

8b. Are debris volumes and capacities accounted for in the Bulk Solid category of Table #7? If not, what categories do they fall under? Please provide percentages of debris under those categories.

CBI

NOTICE
If the filmed image is less clear than this Notice it is due to the quality of the document being filmed.

CD2F 003

0762

G.

Future Capacity of Commercial Incinerators

1. What other physical changes (e.g., changes to feed systems, storage area) are planned for this facility that will change it's capacity by July, 1994? Describe the change and the resulting change in capacity by waste form (i.e. the increase or decrease by waste form.)

CBI

2. What other regulatory changes are planned for this facility that will change it's capacity.? Describe the change and the resulting change in capacity by waste form.

CBI

NOTICE
If the filmed image is less clear than this Notice it is due to the quality of the document being filmed.

CD2F 003

0 7 6 7

G. Other Factors to Determine Future Capacity of Commercial Incinerators (Ctd.)

3. Are you prohibited from receiving any RCRA hazardous wastes from <u>any</u> states? If so, which states?

No

4. Are you limited to receiving a maximum amount of RCRA hazardous waste from any states? If so, which states and what is maximum amount?

No

NOTICE
If the filmed image is less clear than this Notice it is due to the quality of the document being filmed.

CD2F 003

0 7 6 4

NOTICE
If the filmed image is less clear than this Notice it is due to the quality of the document being filmed.

A. Facility Information

1. Respondent Name and Title: Al Trujillo, Product Manager

Company: Thermal KEM

Phone Number: (803) 329-9690

Fax Number: (803) 329-9689

Name of Caller: _____

Date of Call: _____

Time of Call: _____

2. Number of units currently burning RCRA hazardous waste at this facility: 1

Number of units expected to shutdown by July 1994: 0

Additional units expected to come on line by July 1994: 1

Total number of units expected to burn RCRA hazardous wastes at this at the facility by July 1994: 2

3. Has this facility undergone any physical or regulatory changes in the past 2 years that have changed it's capacity? If so, briefly explain.

Increases in storage and incineration capacity were permitted as class 3 modifications Part B - HWSW permits as a result of the OTC Rule.

CD2F 003

0 7 6 5

A. Facility Information (ctd.)

4. What is the current overall utilization of this facility's incineration capacity for following physical forms of waste? CBI

Liquids _____%
Pumpable Sludges _____%
Nonpumpable Sludges _____%
Bulk Solids _____%
Containerized Solids _____%
Total _____%

NOTICE
If the filmed image is less clear than this Notice it is due to the quality of the document being filmed.

CD2F 003

0 7 6 6

B. Permit Issues

1. Have you received a final RCRA Part B permit? If not, when do you expect to receive a RCRA Part B permit?

Yes

2. What other permit(s) are required (e.g. NPDES, Air Emission)? By when? What is the current status of these permit(s)?

POTW - Permit to discharge treated scrubber water
Air Permit
Both permits are currently in effect

NOTICE
If the filmed image is less clear than this Notice it is due to the quality of the document being filmed.

CD2F 003

0767

B. Permit Issues (ctd.)

3. What RCRA wastes are currently permitted? If more convenient, please fax list. Are all units authorized for same RCRA codes? If not, please specify RCRA codes accepted for each unit.

All OTC codes as well as F037, F038 and the K codes were added as a class 1 permit modification and can be managed at facility.

4. Are you adding any waste codes to your permit? Which ones? When do you expect approvals?

No

5. What types of wastes do you generally reject?

Explosive, Radioactive, Infectious, PCB-TSCA, and Ammo

NOTICE
If the filmed image is less clear than this Notice it is due to the quality of the document being filmed.

CD2F 003

0 7 6 8

C. Constituent Limitations/ Maximum Feed Rates

1. Do you accept brominated wastes (e.g., activated alumina containing ethylene dibromide or phenolic polymers containing methyl bromide)? What is your maximum bromine limit (e.g., pounds per hour or maximum concentration in feed)?

Yes, less than 5% in feed

D. Container types that can be Received at the Facility

1. Do you accept liquids, pumpable sludges, nonpumpable sludges, and solids in the following forms? CBI

Container Type	Liquid	Pumpable Sludge	Nonpumpable Sludge	Solid
Lab Pack				
Drums (What Sizes?)				
Cubic Yard Box				
Cubic Yard Bag				
Roll-off				
Dumptrailer				
Tanker				
Pressure Tanker (Cusco)				
Railcar				
Barge				
Other (Specify)				

NOTICE
If the filmed image is less clear than this Notice it is due to the quality of the document being filmed.

CD2F 003

0169

DCN PH2A012
COMMENTER Beazer East
RESPONDER JLABIOSA
SUBJECT WOOD11
SUBJNUM 012
COMMENT Specifically, EPA discusses the Penta Task Force's and the American Wood Preserving Institute's concerns that promulgation of concentration limits for dioxin/furan hazardous constituents in Hazardous Waste F032 may discourage commercial incineration facilities from treating this waste. 61 Fed. Reg. 21420. For the record, Beazer also submitted comments which were critical of EPA's proposal to establish dioxin/furan constituent concentration limits as LDRs for F032. It was and continues to be Beazer's belief that selection of incineration as the Best Demonstrated Available Technology ("BDAT") will bring cleanups of wood treating sites to a halt due to a lack of capacity at off-site incineration facilities, negative community reaction for on-site incineration facilities and skyrocketing treatment costs. Beazer recommended that EPA omit the dioxin/furan constituents from the LDR constituents of concern for Hazardous Waste No. F032. Beazer cited several reasons for not including dioxin/furan as part of the F032 LDRs, to wit: (1) EPA's failure to scientifically demonstrate and support the risk from low level exposure to dioxin/furans; (2) the problematic nature of the analytical method used for detecting dioxin/furans; and (3) the non-availability of incineration capacity for treatment of large quantities of soil and debris which may contain F032.
RESPONSE

EPA is not persuaded by the commenter's arguments that the regulation of D/F in F032 is not necessary or that such proposal would delay treatment of F032. EPA points out that these constitents are toxic to the human health and the environment and that D/F constituents also supported the listing of F032 as a hazardous waste under Subtitle C of RCRA. (See Background Document for the Listing of Wood Treater Wastes (F032, F034, and F035)) As the commenter may be aware, EPA's existing guidance documents on the management of contaminated media at wood preserving sites also identify D/F constituents as RCRA constituents to be addressed during the design of clean up treatment options and within the scope of Record of Decisions. Further, EPA existing soil guidance documents for wood preserving sites also identify incineration and thermal desorption as treatment options capable of meeting clean up levels and treatment standards under the LDRs. (See Presumptive Remedies for Soils, Sediments, and Sludges at Wood Treater Sites (Directive 9200.5-162, also published under NTIS: PB-95-963410); Technology Selection Guide for Wood Treater Sites (EPA 540-F-93-020 or Pub.9360.0-46FS); and Contaminants and Remedial Options at Wood

Preserving Sites.(EPA/600/R-92/182).)

Finally, the majority of commenters were more supportive of EPA's proposal to co-promulgate both treatment limits and an alternative compliance treatment standard of combustion, "CMBST", for the regulation of D/F in F032. Like EPA, these commenters felt that such approach can create more available capacity, based on empirical experience with F024 wastes.

DCN PH2A012
COMMENTER Beazer
RESPONDER JLABIOSA
SUBJECT WOOD11
SUBJNUM 012
COMMENT In our comments to the proposed Phase IV rulemaking, we discussed the unavailability of any commercial incinerator which could meet the proposed 1 part per billion LDR concentration standard for dioxin/furan, aside from the Aptus facility in Coffeyville, Kansas. The instant proposal would allow incineration or combustion of the wastes by facilities with destruction removal efficiencies ("DRE") of 99.99% rather than the 99.9999% DRE required for "dioxin-listed" wastes. 40 C.F.R. 266.104(a)(3). Theoretically, this alternative LDR treatment standard should increase the availability of incineration and combustion facilities to manage F032 wastes.
RESPONSE

It appears that the commenter was concerned that since the BDAT model supporting numerical limits for D/F constituents was based on six 9's Destruction and Removal Efficiency (DRE) incinerators, facilities seeking compliance with the numerical limits in RCRA incinerators, cement kilns, or other industrial furnaces achieving a four 9's DRE were likely to fail the proposed UTS limits. It also appears from EPA's discussions in the preamble and the BDAT Background Document for F032, F034, and F035 that at least one facility was permitted to treat D/F containing wastes as difficult to treat as F032. This led the commenter to believe that EPA was considering limiting the combustion of F032 to a six 9's DRE-RCRA combustion device. EPA is clarifying, therefore, that in today's rule EPA is not amending 264.343 (a) (2) or 266.104 (a) (3) to compel the combustion of F032 or F024 in a six 9's Destruction and Removal Efficiency combustion device. Nor has EPA proposed that the combustion of F032 or F024 is only conducted in a six 9's or a four 9's DRE - RCRA combustion device.

It should be noted that although the BDAT combustion technologies supporting the development of UTS limits for D/F regulated in nonwastewater forms of F032 and F024 met a RCRA incineration performance of six 9's DRE performance, the modeled compliance treatment alternative of "CMBST" was based on the performance a four 9's DRE - RCRA 264 Subpart O, rotary kiln incinerator combusting F024. Data from the F024 incineration study shows that a well designed and well operated four 9's DRE incinerator can also meet the proposed limits of 1 ppb for nonwastewater forms of F024.

Based on this information, EPA believes that RCRA Omnibus permit authorities can be used under 40 CFR 264, Subpart O and 40 CFR 266 to ensure that the combustion of F032 (and F024) is conducted in a well designed and well operated combustion

devices and thus, minimizing the release or generation of D/F during combustion. This adopted approach may be superseded by the outcome of the proposed MACT limits for D/F arising from combustion devices schedule for promulgation in the April 1998.

Facilities seeking the combustion of F032 in an incinerator regulated under a 40 CFR 265, Subpart O do not qualify for a "CMBST" treatment standard, unless they are able to make a demonstration of equivalent performance to a permitted incinerator or to a BIF. F032 residues arising from all other 40 CFR 265 units must meet the applicable UTS numerical limits for each regulated D/F constituent as a prerequisite to land disposal.

EPA believes that promulgation of this revised suboption 3, fully addresses the concerns of the commenters, fully addresses the capacity concerns raised by the commenters, and that this suboption is protective of the human health and the environment.

DCN PH2A013
COMMENTER Georgia Department of Natural Resources, EPD
RESPONDER JLABIOSA
SUBJECT WOOD11
SUBJNUM 013
COMMENT The Georgia Department of Natural Resources, Environmental Protection Division (EPD) has reviewed the above notice of data availability and would like to take this opportunity to provide additional comments on the issue of treatment capacity for soils contaminated with F032 wastes. Specifically, the State of Georgia may be unique in the nation for having a very substantial amount of this material on hand that will likely place a strain on the capacity of virtually any treatment methodology that is ultimately selected for F032 wastes.
RESPONSE

EPA is addressing the commenter's concerns in today's rule.

DCN PH2A021
COMMENTER J. H. Baxter
RESPONDER JLABIOSA
SUBJECT WOOD11
SUBJNUM 021
COMMENT In its comments on the August 1995 proposal. J.H. Baxter made clear that the cost of incineration and lack of available capacity would impose a real, unwarranted hardship on many members of the wood preserving industry. Suboption 1 appears to address this problem by expanding the number of facilities available to treat F032 wastes. In the very limited time made available to comment on this proposal, J.H. Baxter has tried to ascertain the impact it would have if implemented. We understand from sources in the waste disposal industry that implementation of suboption 1 should result in adequate capacity. Further, J.H. Baxter has been informed that it should not cause the dramatic price increase for disposal of F032 that will occur if the original proposal is implemented. J.H. Baxter has not been able to obtain any meaningful information on the impact of suboptions 2 and 3. Therefore, J.H. Baxter remains very concerned that either of these are unlikely to yield the same benefits. They both will result in a smaller universe of approved combustion facilities and in higher prices. Therefore, J.H. Baxter urges EPA to adopt suboption 1, not suboptions 2 or 3 when the final Phase IV rule is issued. If EPA is interested in proceeding with suboptions 2 or 3, it, along with OMB, must carefully assess the benefits and burdens of these proposals, as well as the impact on the regulated community. To obtain meaningful public input, EPA also should provide additional time for comment.
RESPONSE

Economic considerations have no bearing in the development of treatment standards under the LDR. EPA is relying solely on treatment management alternatives allowed under Section 3004(m) of HSWA, which EPA believes enable the reduction of short- and long-term risks associated with the disposal of Dioxin and Furan (D/F) constituents in F032 wastes.

EPA is promulgating treatment standards that set numerical limits for the regulation of Dioxin and Furan (D/F) hazardous constituents in F032. In response to comments from the Penta Task Force and the American Wood Preserving Institute, the EPA has also proposed and is promulgating in today's rule an alternative compliance treatment

standard that sets combustion ("CMBST") as a treatment method for D/F constituents in F032.

EPA has promulgated, however, a revised "CMBST" compliance alternative which limits the availability of the "CMBST" to those combustion devices in compliance with applicable combustion standards in the 40 CFR 264 , Subpart O, or 266. F032 wastes combusted in combustion devices operating under 266 or 264 do not have to monitor the concentrations of D/F left behind in combustion residues. However, the facilities must meet UTS numerical limits applicable to each organic and metal constituent regulated in F032 as a prerequisite to land disposal.

It should be emphasized that facilities seeking the combustion of F032 in an incinerator regulated under a 40 CFR 265 Subpart O do not qualify for a "CMBST" treatment standard, unless they are able to make a demonstration of equivalent performance to a permitted incinerator or to a BIF. F032 residues arising from all other 40 CFR 265 units must meet the applicable UTS numerical limits for each regulated D/F constituent as a prerequisite to land disposal.

EPA's authority to prescribe treatment limits or methods of treatment under the LDR are set under section 3004 (m) of HSWA. Under such HSWA provisions, EPA is directed to set treatment standards that would reduce short- and long-term threats to the human health and the environment. EPA believes that Omnibus permit authorities under RCRA and other available environmental federal/state laws can be used to support the establishment of 3004(m) treatment standards and thus, to prescribed appropriate technological controls on treatment methods prescribed for these wastes. EPA has promulgated specific performance standards for the operation of incinerators combusting certain acutely toxic wastes that contain D/F constituents (see 40 CFR 264.343 (a) (2) and 50 FR 2005, January 14, 1985). EPA has promulgated similar kinds of technology treatment standards for hazardous wastes regulated under §268.42 and hazardous debris §268.46. These specific treatment standards under §§268.42 and 268.46 prescribe treatment methods and EPA has relied on permit authority, federal/state air emission standards, or promulgated operational technology performance requirements to ensure that the technology treatment methods are protective of the human health and the environment.

DCN PH2A003
COMMENTER Penta Task Force
RESPONDER JLABIOSA
SUBJECT WOOD12
SUBJNUM 003
COMMENT The Penta Task Force is comprised of the two U.S. manufacturers of penta -- Vulcan Chemicals, a division of Vulcan Materials Company, and KMG-Bernuth, Inc. Penta is the chlorophenolic chemical used in wood preserving processes that generate F032 waste. Accordingly, the Penta Task Force is profoundly affected by the Agency's August, 1995 Phase IV LDR proposal and the May 10, 1995 Notice of Data Availability.
RESPONSE

EPA is addressing the commenter's concerns in today's final rule.

DCN PH2A009
COMMENTER Dow Chemical Company
RESPONDER JLABIOSA
SUBJECT WOOD12
SUBJNUM 009
COMMENT The Dow Chemical Company (Dow) appreciates this opportunity to comment on this important Notice of Data Availability and respectfully submits these comments on the notice published in the May 10, 1996 Federal Register pages 21,418 - 21,422. Dow is only submitting comments on item 2 Treatment Standards for Wood Preserving Waste F032, and Potentially, F024.
RESPONSE

EPA is addressing the commenter's concerns in today's final rule.

DCN PH2A010
COMMENTER EDF
RESPONDER JLABIOSA
SUBJECT WOOD12
SUBJNUM 010
COMMENT These comments are submitted to the U.S. Environmental Protection Agency (EPA) in response to the Agency's notice of data availability (NODA) related to the land disposal restrictions (LDR) program under the Resource Conservation and Recovery Act (RCRA). EPA's NODA was published in the Federal Register at 61 FR 21418 (May 10, 1996). Description of the Commenter EDF is a national non-profit environmental advocacy organization with more than 300,000 members dedicated to the protection of human health and the environment by inter alia, eliminating unnecessary exposure to hazardous substances, including hazardous wastes. EDF members live, work, and recreate in areas immediately affected by the improper management of hazardous and industrial wastes, including the hazardous wastes addressed in this NODA. EDF participates extensively in RCRA implementation and oversight, including activities in the regulatory, legislative, and judicial contexts. The NODA Generally Though published under the title "Notice of Data Availability", the current notice largely requests comment on issues for which the Agency lacks data, has never proposed regulatory language, and/or never articulated a rationale or methodology for reaching a particular position. In many cases, the only material on which EPA seeks comment is the position of other commenters.
RESPONSE

EPA believes that it clearly presented certain issues for supplemental comment in a legitimate manner. The issue is whether there should be an alternative means of compliance for the CDD/CDF standards. EPA proposed an alternative whereby monitoring was unnecessary if treatment was conducted in certain types of devices. The basis for the alternative standard was that if the device is combusting efficiently and demonstrates compliance with all other organic standards through monitoring, compliance with CDD standards would also be demonstrated. EPA has adopted essentially this approach in the final rule, the alternative being available only to combustion devices subject to at-the stack controls which show efficient combustion conditions (these are BIFs and permitted incinerators, all of whom would be subject to continuous CO or HC standards, and in some cases, to at-the-stack CDD/CDF controls, plus interim status incinerators able to demonstrate equivalent performance.) EPA believes that this level of combustion is a valid alternative way of

expressing BDAT for the CDDs in the wood preserving wastes.

DCN PH2A010
COMMENTER EDF
RESPONDER JLabiosa
SUBJECT WOOD12
SUBJNUM 010
COMMENT Conclusion EPA should abandon issues raised in the NODA not ripe for consideration in this rulemaking, and promulgate the necessary treatment standards as expeditiously as possible reflecting the comments expressed herein.
RESPONSE

EPA believes that the revised suboption 3 allowing the combustion of F032 and F024 in combustion devices regulated under 40 CFR 264 Subpart O, and 40 CFR 266 Subpart H, fully addresses EDF concerns that these wastes are combusted in a manner that will achieve the numerical CDD standard. The Agency's experience with F024 wastes, which can achieve these same standards (as established initially in the June 1989 Second Third rulemaking), demonstrates that combustion properly conducted can treat CDDs to this level. See also information in the BDAT Background Document for these wood preserving wastes. EPA believes it is warranted to adopt this alternative standard, because a) the standard is equally effective at minimizing threats posed by land disposal of wood preserving wastes; and b) the alternative creates desirable flexibility and is likely to provide more available treatment capacity for these wastes, thus further minimizing threats by increasing the likelihood that treatment will occur promptly. EPA's past experience with F024 wastes again supports these conclusions.

EPA has deferred the proposed MACT standard for the combustion of F032 and F024 to the MACT rule, scheduled for promulgation in April 1998. EPA believes that adoption of such proposed treatment standard for F024 and F032 may impose regulatory burden on the combustion industry while technical issues on the proposed air emission for D/F-MACT limit are still being deliberated. EPA believes that the existing CO/HC standards, plus at-the-stack controls on D/F, are adequate to assure that the treatment standard for D/F will be met without analysis. EPA's experience with F024 wastes in 1989 lends credence to commenters' concerns that there will be insufficient capacity without this compliance alternative. EPA therefore has decided to adopt it.

DCN PH2A011
COMMENTER Vinyl Institute
RESPONDER JLabiosa
SUBJECT WOOD12
SUBJNUM 011
COMMENT On behalf of our client, the Vinyl Institute (VI), a division of The Society of the Plastics Industry, Inc. (SPI), we are pleased to submit the following comments on the above-captioned matter. 61 Fed. Reg. 21,418 (May 10, 1996). As discussed below, we support suboption 1 as it relates to F024 wastes.
RESPONSE

EPA is addressing the commenter's concerns in today's final rule.

DCN PH2A012
COMMENTER Beazer East
RESPONDER JL
SUBJECT WOOD12
SUBJNUM 012
COMMENT EPA has identified three suboptions for implementation of the proposed alternative treatment method. Suboption 1 would apply the existing F024 combustion treatment standard to F032. Suboption 2 would establish the incineration/combustion alternative standard but would require the combustion unit to achieve a dioxin/furan emission standard. Thus, such units would be required to install controls to limit the potential for forming and emitting dioxin/furan emissions into the atmosphere or adsorption into the waste. EPA has suggested that the dioxin/furan emission standard proposed by EPA under the Clean Air Act, that is, a maximum toxicity equivalent emission standard of 0.2 mg/dscf for combustion units burning RCRA-hazardous wastes, could be a requirement of the combustion alternative treatment standard. Under this suboption, any RCRA-permitted or interim status combustion device capable of meeting the 0.20 mg/dscf standard would be allowed to combust F032. The third suboption would limit the combustion of F032 waste to combustion devices that have been permitted (i.e., Suboptions 1 and 2 would apply to interim status and fully-permitted facilities but under Suboption 3 only fully-permitted facilities could accept hazardous waste). 61 Fed. Reg. 21421.
RESPONSE

In today's final rule, EPA is promulgating, as proposed, numerical limits and an alternative compliance treatment standard for the regulation of each Dioxin and Furan (D/F) constituent regulated in F032 and F024. After reviewing public comments, EPA decided not to promulgate suboptions 1 and 2. In addition, EPA amended the proposed suboption 3 and promulgated a revised combustion --"CMBST" --- treatment standard alternative that meets BDAT under the Land Disposal Restrictions. The revised "CMBST" standard is only available for those units operating pursuant to permit conditions under 40 CFR 264, Subpart O, or operating under the Part 266 standards for BIFs. F032 or F024 wastes treated pursuant to the "CMBST" treatment compliance alternative do not have to be monitored to see if the numerical limits for D/F constituents have been achieved. However, the other organic and metal constituents must be analyzed to assure they meet the applicable UTS limit as a prerequisite to land disposal.

Facilities who choose to combust F032 or F024 in an incinerator operating pursuant to 265 provisions must meet the applicable treatment limit for each one of the regulated D/F constituents, organics, and metals as a prerequisite to land disposal. EPA also believes that facilities operating a Part 265 incinerator that can demonstrate to EPA that their combustion device operates in a manner that conforms to the combustion controls achieved by Part 264 incinerators or Part 266 BIFs may qualify for the CMBST treatment standard pursuant to a treatability variance under 268.42(b). (See Final Background Document for Wood Preserving Wastes F032, F034, and F035, April 15, 1997, and today's preamble discussion.)

DCN PH2A012
COMMENTER Beazer
RESPONDER JLabiosa
SUBJECT WOOD12
SUBJNUM 012
COMMENT Beazer East, Inc. ("Beazer"), and its subsidiaries and affiliates with headquarters in Pittsburgh, Pennsylvania, hereby submit comments in response to the United States Environmental Protection Agency's ("EPA's" or the "Agency's") notice of data availability for the Land Disposal Restrictions Phase IV Proposed Rule - Issues Associated with Clean Water Act Treatment Equivalency, and Treatment Standards for Wood Preserving Wastes and Toxicity Characteristic Metal Wastes, 61 Fed. Reg. 21418, May 10, 1996 (hereinafter referred to as the "Notice"). On August 22, 1995, EPA proposed the Land Disposal Restriction ("LDR") Phase IV rule ("proposed Phase IV rulemaking") (60 Fed. Reg. 43654) which, among other things, set forth proposed treatment standards for newly listed and characteristic wastes. Beazer provided comments to the August 22, 1995 Notice of Proposed Rulemaking which addressed the proposed LDRs for wood preserving wastes F032, F034 and F035. These comments are incorporated by reference as if fully set out herein. See, Comments of Beazer East, Inc. Regarding the August 22, 1995 Notice of Proposed Rulemaking and Request for Comment on Land Disposal Restrictions - Phase IV, November 17, 1995. In the instant Notice, EPA discusses certain data and comments that it has received in response to the proposed Phase IV rulemaking and requests comments on certain issues raised by the Phase IV proposal commenters. 61 Fed. Reg. 21419.
RESPONSE

EPA is addressing the commenter's concerns in today's final rule.

DCN PH2A014
COMMENTER Env. Technologies Intl
RESPONDER JLABIOSA
SUBJECT WOOD12
SUBJNUM 014
COMMENT II. Treatment Standards for Wood Preserving Waste F032, and Potentially F024 In this NODA, EPA has suggested three alternative treatment standards for F032 wood preserving wastes. 61 FR at 21420-21. ETC is considering these alternatives in greater detail and will provide supplemental comment.
RESPONSE

EPA did not receive supplemental comments from ETC with regard to the proposed "CMBST" treatment standard alternative and each one of the three proposed not mutually exclusive suboptions.

DCN PH2A015
COMMENTER CKRC
RESPONDER JLABIOSA
SUBJECT WOOD12
SUBJNUM 015
COMMENT In the following paragraphs, CKRC comments on specific concerns raised within each NDA option to set an alternative treatment standard for F032 wastes that the Agency has published for comment, but stresses the importance of our fundamental process concern as it is applicable to each specific issue identified in this comment letter.
RESPONSE

After reviewing public comments, EPA concurs with the commenter that promulgation of regulatory performance requirements for combustion technologies treating D/F constituents in F032 and F024 will ultimately be addressed in the MACT rule and that finalizing the MACT standards at this time is premature. The standards are only proposed, and may well undergo change as a result of public comments received. EPA intends to finalize the proposed MACT standards in April 1998. EPA believes further that until MACT standards are promulgated, standards for permitted incinerators and for BIFs (which may be supplemented by conditions adopted pursuant to permit writer's omnibus authority, upon a proper site-specific demonstration of need) are sufficient to assure that D/F in the waste will be destroyed to the level of the treatment standard. The particular controls are those assuring proper combustion efficiency, and, for some units, at-the-stack D/F standards. EPA therefore has modified its proposal.

DCN PH2A016
COMMENTER DuPont
RESPONDER JLABIOSA
SUBJECT WOOD12
SUBJNUM 016
COMMENT DuPont is pleased to submit one original, two paper and one computer disk ASCII file copy of our comments on the Environmental Protection Agency's notice of data availability for Land Disposal Restrictions Phase IV Proposed Rule--Issues Associated With Clean Water Act Treatment Equivalency, and Treatment Standards for Wood Preserving Wastes and Toxicity Characteristic Metal Wastes published in the Federal Register on May 10, 1996. DuPont is a generator and treater of hazardous wastes which are potentially impacted by this rulemaking, once final. If there are questions regarding any of the information provided in this package, please call me at 302-774-8056. DuPont appreciates your consideration of these comments.
RESPONSE

EPA is addressing the commenter's concerns in this final rule.

DCN PH2A021
COMMENTER J. H. Baxter
RESPONDER JLABIOSA
SUBJECT WOOD12
SUBJNUM 021
COMMENT J.H. Baxter & Company (J.H. Baxter) submits these comments on the information set forth in the above-referenced notice. J.H. Baxter is a family-owned company in the wood preserving industry. J.H. Baxter is very concerned about the potential impact of the proposed regulations on the industry and submitted comments on EPA's August 1995 Notice proposing land disposal restrictions for certain wood preserving wastes. Two aspects of EPA's May 10 Notice concern J.H. Baxter: 1) treatment standards for F032 wastes; and 2) excluding wood preserving waste waters from the definition of solid waste.
RESPONSE

EPA is addressing the commenter's concerns in today's final rule.

DCN PH4P113
COMMENTER Chemical Manufacturers Association
RESPONDER JL
SUBJECT WOOD12- "Non Detection Limits"
SUBJNUM 113
COMMENT

B. EPA should allow concentration-based as well as technology-based criteria to satisfy BDAT for metals in nonwastewater forms of F032, F034, and F035.

In the preamble, EPA indicates that for metal in nonwastewater forms of F032, F034, and F030, stabilization is BDAT for chromium (total), and that vitrification is BDAT for arsenic. Use of the word "is" and not the phrase standards "... are based on" implies that the Agency intends to allow only the use of these specific technologies to treat these constituents to levels below which these wastes may be land disposed. However, the regulatory language in the table at 268.40 indicates that the nonwastewater standards for arsenic and chromium are numerical standards CMA has commented in the past that it generally favors concentration-based treatment standards for BDAT and that it supports the allowance of technology-based standards as an alternative to, and not as a replacement for, concentration-based standards. We maintain this position. Although the Agency and CMA may not currently be aware of technologies other than stabilization and vitrification that could be used to treat for chromium and arsenic in the wastes described above, we favor the flexibility afforded by a concentration-based standard which would allow any technology that can meet these levels as an alternative. CMA requests that the preamble language be modified to clarify that any technology that can meet the levels indicated in the table may be used.

In addition, EPA is proposing F032 wastewater and nonwastewater standards that would require meeting a concentration that does not exceed 1 ppb (or 1 ug/kg) for all the PCDD and PCDF homologue and isomer constituents proposed for regulation for F032 wastes. Even if a 1 ug/kg level is achievable for PCDD and for PCDF, analytical limitations may preclude UTS levels this low.

Normally when EPA sets treatment standards for a waste constituent, a procedure is followed in which both an "accuracy correction factor" and a "variability factor" are applied to the concentration of the constituent observed in the treatment data that supports the standard. See, Final Best Demonstrated Available Technology (BDAT) Background Document for Universal Treatment

Standards Volume A: Universal Treatment Standards for Wastewater Forms of Wastes, 52 (July 1994). The accuracy correction factor is used to account for analytical limitations in the available treatment performance data, and the variability factor is used to correct for variations in waste treatment, sampling, analytical techniques and procedures, and other factors that affect treatment performance.

However, we are not sure if EPA accounted for variability and accuracy in setting the universal treatment standards for nonwastewater forms of these organic wastes We urge EPA to do so. As CMA has previously written in its July 9, 1993 comments on the May 24,1993 Interim final rule on land disposal restrictions for ignitable and corrosive characteristic wastes whose treatments standards were vacated, organic wastestreams are not easily analyzed for constituents at very low concentrations. CMA reiterates its previous recommendation that EPA explicitly states that, given approved test methods, nondeductible levels of constituents are equivalent to zero concentration and should also be applied this the setting of UTS levels.

RESPONSE

The commenter raised four issues and EPA's responses to such comments follow below:

1. Clarification that EPA is setting numerical limits for the regulation of Arsenic and Chromium (total) in wastewater and nonwastewater forms of F032.

EPA is clarifying in today's final rule that EPA is promulgating UTS limits for the regulation of Arsenic and Chromium (total) in F032, F034, and F035. Since EPA is establishing UTS limits that are expressed as maximum concentrations of these metals allowed for land disposal, the use of any treatment technologies capable of meeting the UTS limits is not prohibited except for those that may constitute impermissible dilution.

2. "Analytical Difficulties" may preclude the establishment of UTS limits for F032.

EPA's lacks data from the commenter to assess what kind of technical difficulties will be encountered during the analysis of F032 wastes.

After reviewing the characterization data of the Penta Group, the reported analytical difficulties, and F032 Characterization studies; EPA has concluded that the reported

"difficulties" appear to represent more the unfamiliarity of chemists performing the chemical analyses with D/F recommended test methods rather than real flaws in the test method. EPA believes further that the alleged "difficulties" can easily be overcome by routine laboratory clean-up procedures and the use of appropriate solvents and other laboratory calibration techniques. EPA has enhanced, therefore, the discussion of these recommended procedures and calibration techniques in the BDAT Background Document. ***Also, see the Administrative Record supporting today's Phase 4 final rule for the technical document titled: Background Paper Addressing Technical Issues Related to Analysis of F032 Wood Preserving Wastes for Dioxins and Furans, dated June 19, 1996.***

3. EPA should correct the D/F limits for accuracy and variability.

Several commenters were correct in pointing it out that EPA did not correct the proposed UTS limits for D/F in F032 with accuracy and variability factors, as typically done in the calculation of treatment standards of other hazardous constituents prohibited from land disposal. EPA did not adjust the proposed UTS limits for D/F constituents, nor EPA is doing so in today's final rule, as explained below.

The UTS treatment limits are based on combustion technologies that EPA believes will meet the proposed UTS limits for D/F in F032 as long as the combustion of F032 is conducted in a device that is well designed and well operated. EPA concluded in the Solvents and Dioxins rule that a six-nines Destruction and Removal Efficiency (DRE) combustion device can routinely achieve the promulgated limit (see January 18, 1986, 51 FR (1733-1735)). Based on the performance of a four-nines DRE rotary kiln incinerator burning F024, EPA believes that a four-nines DRE unit that is well designed and operated can also meet the promulgated UTS limits for D/F (see June 1, 1990, 55 **FR** (22580-22581). Although none of the submitted comments or data appear to support the revisions to D/F limits proposed by the commenters, EPA may revisit this issue in a separate rulemaking if new data become available.

However, EPA points out to the commenter that EPA generally allows deviations from the promulgated treatment limits to concentration of up to one order of magnitude above the applicable treatment standard (i.e. the numerical UTS limit) prescribed in the 40 CFR 268.40, for the ashes arising from combustion devices. EPA refers to such treatment limits allowances as the analytical detection limit (compliance) alternative. Facilities seeking the disposal of such combustion ashes must satisfy the provisions in the 40 CFR 268.40 (d) (1) through (3) and 268.7 (b) (5) (iii). (Also, see June 1, 1990, 55 **FR** (22541-22542).)

In addition, EPA has set an alternative compliance treatment standard that sets combustion "CMBST" as a treatment standard for D/F for nonwastewater forms of F032. To qualify for a "CMBST" treatment standard, the combustion device should be operated under a 40 CFR 264 Subpart O or under a 266 operating permit and the Permit writer

will use his/her Omnibus power authorities to determine if a combustion device seeking to treat F032 can be deemed well operated and well designed combustion devices. If deemed a well operated and designed combustion device, the facility will not have to monitor the concentrations of D/F constituents in wastewater and nonwastewater forms arising from the combustion of F032. EPA feels therefore that such alternative compliance treatment standard fully addresses the concerns raised by the commenters.

4. Proposal that "nondetection limits" are equivalent to zero detection.

EPA believes the commenter is concern that a detection limit in a treated waste above a UTS numerical limit may fail to meet the applicable treatment standard even if the targeted analyte is below the detection limit. EPA believes that a "nondetection limit" is not feasible way to address this concern. EPA believes that a constituent shown below a particular targeted detection limit means that the constituent is either destroyed by the employed technology, mask in the waste residue due to matrix interferences, or it could be measured in concentrations below the targeted detection limit. As a result, it could be possible that the constituent of LDR concern is still above the applicable UTS limit should the targeted selection limit be above the UTS promulgated limit. Therefore, EPA believes that a facility could still be deemed in violation of the applicable limit if EPA detects such constituent above its UTS limit.

However, EPA points out to the commenter that EPA generally allows deviations from the promulgated treatment limits to concentration of up to one order of magnitude above the applicable treatment standard (i.e. the numerical UTS limit) prescribed in the 40 CFR 268.40, for the ashes arising from combustion devices. EPA refers to such treatment limits allowances as the analytical detection limit (compliance) alternative. Facilities seeking the disposal of such combustion ashes must satisfy the provisions in the 40 CFR 268.40 (d) (1) through (3) and 268.7 (b) (5) (iii). (Also, see June 1, 1990, 55 FR (22541-22542).) Another option available to the commenter is to verify if the waste of concern is different from the one supporting the UTS limit and seek from EPA a treatability variance pursuant to provisions in the 40 CFR 268.44.

RESPONSE TO PUBLIC COMMENTS ON THE PROPOSED PHASE IV LAND DISPOSAL RESTRICTION RULE:

Wood Preserving Wastes

Office of Solid Waste
U.S. Environmental Protection Agency

April 15, 1997

INTRODUCTION

EPA proposed the Phase IV Land Disposal Restriction (LDR) rule in August 1995 to regulate decharacterized wastewaters and several newly listed hazardous wastes.[1] As part of the proposed rule, the Agency solicited and received public comments. This document reviews EPA's response to comments that relate to the Regulatory Impact Analysis (RIA) conducted for the proposed Phase IV rule.[2] We discuss below only those comments related to the analysis of the costs, benefits, and economic impacts of the proposed rule.[3] We also exclude discussion of comments on the portion of the proposed rule addressing decharacterized wastewaters. In March 1996 Congress passed the Land Disposal Program Flexibility Act, a statute that essentially postpones any decision on potential regulation of decharacterized wastewaters until EPA conducts a study of the risks posed by units that manage these wastes. We also exclude discussion of comment on the portion of the proposed rule addressing treatment standards for TC metals. The Agency is reproposing treatment standards for TC metal nonwastewaters. Responses to public comments made on the TC metals portion of the proposed rule will be addressed in the response to comments document for the final rule.

In several instances, comments on the proposed rule led EPA to initiate new analysis to reflect the concerns of commentors and to incorporate their suggestions for improving the impact assessment. We identify below the major issues raised in the comments and describe the analysis that we performed in response. We address each of the major issues commentors raised for the Phase IV LDR rule regarding treatment standards proposed for newly identified wood preserving wastes.

WOOD PRESERVING LDRS

Summary of Comments

Commentors on the portion of the rule that establishes LDRs at UTS levels for wood preserving wastes focused on three major issues: (1) commentors in the wood preserving industry suggested that the economic impact of establishing dioxin treatment standards based on "six nines" incineration is very large and is underestimated in the RIA because they disagree with both

---

[1] EPA, "Land Disposal Restrictions -- Phase IV," 60 FR 43654, August 22, 1995.

[2] See *Regulatory Impact Analysis of the Phase IV Land Disposal Restriction Rule*, which can be found in the docket for this rule.

[3] In most cases we have not addressed the wide range of comments that deal with EPA's selection of specific policy options. Examples of such comments include arguments related to the Agency's decision to regulate specific constituents, the suitability of granting compliance variances to certain industries, and the basis for selecting concentration standards. EPA's response to these comments is summarized in the preamble to the final rule.

the cost per ton and tonnage affected estimates in the RIA (e.g., estimates of tonnage affected did not include quantities of remedial waste at wood preserving sites); (2) commentors supported language in the rule that would provide exemptions for recycling of wood preserving wastewaters; and (3) commentors expressed some concern about differences in the quantity estimates in the capacity analysis and RIA (the difference was substantial, approximately an order of magnitude) and 4) commentors expressed concern that EPA had underestimated costs of the proposed rule for media (e.g., soil and groundwater) contaminated with wood preserving waste. Most of the commentors expressed similar concerns and most referred explicitly to the comments of the American Wood Preservers Institute.

EPA's Response

EPA's revised RIA addresses most of the concerns of commentors. First, [[[revisions to the proposed rule allow for less stringent "four nines" incineration of wood preserving wastes affected by the rule. EPA reconsidered its suggestion that these wastes be combusted only in units meetings a "six nines" standard. This was not required in the listing rule itself, and is not warranted in any case since these wastes are not listed as acute hazardous -- the principal dcc/dcf contaminant are HCDD/HCDFs, not the more toxic TCDD/TCDFs. As a result of this change, the estimated unit costs for incineration dropped substantially, from approximately $6,000 per ton to a range of $1,000 to $1,500 per ton, depending on whether the waste contains both organic and metal hazardous constituents (wastes that contain both types of constituents are more costly to treat to UTS standards). EPA has also evaluated the option of treating newly identified wood preserving wastes in other combustion units such as cement kilns and the economic feasibility of this option.

Second, the final rule affirms an exclusion for recycling of certain wood preserving wastewaters -- this assumption is reflected in the cost and affected waste analysis conducted for the revised RIA, as it was in the RIA supporting the proposed rule.

Third, EPA devoted considerable effort to developing revised estimates of the total quantity of affected waste that accurately affect the legitimate uncertainty in measuring these quantities using existing sources of information. The revised RIA now incorporates a range of estimates, with the low end of this range based on the waste-per-unit-product approach employed in the RIA for the proposed rule and the high end of this range reflecting quantities of wood preserving wastes reported in EPA's Biennial Reporting System. After careful efforts to correct for differences in the manner in which the data were collected and interpreted, the two estimates nonetheless still differ by a factor of five. Differences in these estimates reflect that BRS estimates include some undetermined amount of soil and debris not captured in the waste-per-unit-production approach, and may also reflect some uncertainty over the physical form of the waste as reported in the BRS. Using a range of estimates is a reasonable method to reflect these uncertainties in evaluating the quantity of affected wastes.

EPA also explored the possibility of updating affected waste estimates that rely on the waste-per-unit-product approach used in the proposed RIA, but found that the wood preserving

industry no longer sponsors development of the comprehensive, detailed estimates of industry production necessary to implement this approach. Recent industry data collection efforts may not represent trends in the industry as a whole, and do not provide information at the detailed level necessary to update the waste-per-unit-product approach. The result of EPA's efforts to improve estimates of the impact of wood preserving LDRs are summarized in Exhibits 1 and 2 below.

Exhibit 1

QUANTITY ESTIMATES FOR NEWLY LISTED WOOD PRESERVING WASTES BY PRESERVATIVE TYPE

Preservative Type (Wastecode)	Number of Generating Facilities[a]	Low-End, Micklewright-based Quantity (tons)[b]	High-End, BRS-based Quantity (tons)[c]
Wastewaters[d]			
Creosote (F034)	40	284,375	446
Creosote/Inorganic (F034)	18	55,220	0
Chlorophenol (F032)	19	56,754	12,761
Chlorophenol/Inorganic (F032)	12	34,632	0
Chlorophenol/Creosote (F032)	6	37,193	0
Chlorophenol/Inorganic/Creosote (F032)	12	77,835	0
Inorganic (F035)	362	0[e]	59
TOTAL	469	546,009	13,260
Nonwastewaters[f]			
Creosote (F034)	40	1,086	1,671
Creosote/Inorganic (F034)	18	242	8,751
Chlorophenol (F032)	19	348	2,385[g]
Chlorophenol/Inorganic (F032)	12	240	1,645[g]
Chlorophenol/Creosote (F032)	6	170	1,165[g]
Chlorophenol/Inorganic/Creosote (F032)	12	424	2,907[g]
Inorganic (F035)	362	1,350	284
TOTAL	469	3,860	18,808

[a] Number of active facilities data was taken from the 1993 Micklewright report; BRS data indicate a total estimate of over 200 facilities generating primary newly listed wood preserving wastes.

[b] Quantity estimates are based on data from *Wood Preservation Statistics-1993: A Report to the Wood-Preserving Industry in the United States* (Tables 7 and 8) and waste generation rates from *Regulatory Impact Analysis for the Final Listing of Certain Wood Preserving Wastes* (Exhibit 2-17).

[c] Quantity estimates are based on data from "Revised Wood Preserving Estimates," a memorandum from ICF Incorporated to EPA's Capacity Programs Branch, June 18, 1996 and include an unknown amount of soil and debris.

[d] Includes quantity estimates for wastewaters and preservative drippage.

[e] No wastewaters/preservative drippage are generated. Facilities recycle/reuse all of their F035 wastewaters.

[f] Includes quantity estimates for process solid residuals. Spent formulations are assumed to be minimal, and therefore are not affected by the proposed Phase IV restrictions.

[g] In the BRS scenario, we were unable to directly classify all F032-bearing wastes. Therefore, we have allocated the total F032-bearing waste quantity (8,102 tons) according to the proportions in the Micklewright scenario.

Exhibit 2

ESTIMATED INCREMENTAL TREATMENT COSTS OF THE PROPOSED RULE: NEWLY LISTED WOOD PRESERVING WASTES

Preservative Type (Wastecode)	Waste Quantity Affected (tons)	Total Costs (in millions)		Incremental Treatment Cost Attributable to Phase IV LDRs (in millions)
		Combined LDR Treatment and Subtitle C Disposal[a]	Subtitle C Land Disposal (Baseline)	
Creosote (F034)	1,086 to 1,671	$1.0 to $1.6	$0.2 to $0.3	$0.8 to $1.3
Creosote/Inorganic (F034)	242 to 8,751	$0.3 to $10.4	$0.1 to $1.6	$0.2 to $8.8
Chlorophenol (F032)	348 to 2,385	$0.3 to $2.2	$0.1 to $0.6[d]	$0.3 to $1.[illegible]
Chlorophenol/Inorganic (F032)	240 to 1,645	$0.3 to $2.0	$0.1 to $0.3	$0.2 to $1.[illegible]
Chlorophenol/Creosote (F032)	170 to 1,165	$0.2 to $1.1	$0.1 to $0.2	$0.1 to $0.[illegible]
Chlorophenol/Inorganic/Creosote (F032)	424 to 2,907	$0.5 to $3.5	$0.1 to $0.5	$0.4 to $2.[illegible]
Inorganic (F035)[b]	1,350 to 284	$0.7 to $0.1	$0.3 to $0.1	$0.4 to $0.4
TOTAL[c]	**3,860 to 18,808**	**$3.3 to $20.9**	**$0.7 to $3.7**	**$2.5 to $17.1**

Note: Cost estimates are based on information from both the low-end, Micklewright and high-end, BRS-based scenarios and are for Phase IV affected nonwastewaters only. F032 and F034 wastewaters are treated and discharged to a POTW and F035 wastewaters are recycled/reused.

a Incineration costs for F032 and F034 nonwastewaters assume a 99.99 percent destruction and removal efficiency rate.

b The values in the F035 range appear in descending order to maintain the format within the range: the first value references the low-end Micklewright scenario, while the second value references the high-end, BRS scenario. This is reflected in the totals.

c Totals may not add due to rounding.

d Baseline costs for F032 include incineration costs for 180 tons of F032/D037-mixed waste regulated by Phase II LDRs.

Finally, because environmental media contaminated by wood preserving wastes is being granted a capacity variance for two years, no costs from the Phase IV final rule will be incurred during this time period. Beyond this time period, any remaining remediation of these contaminated media still have a series of alternatives that would preclude the need to incinerate these media as commenters claim. In-situ treatment of these media are exempt from LDR treatment standards. Second, placement of wood preserving remediation wastes into or within a Corrective Action Management Units (CAMU) designated by the Regional Administrator does not constitute land disposal. 40 CFR §264.552(a)(1). Third, the alternative treatment standard for dioxins and furans for F032 wastes allows combustion in a wider range of units (e.g., cement kilns) at a lower cost than in the proposed rule. Fourth, hazardous debris can be treated using alternative treatment standards provided at 40 CFR §268.45. Finally, prospective EPA rulemakings such as the Hazardous Waste Identification Rule for contaminated media should be in effect at the end of the capacity variance

period and afford some regulatory relief through the promulgation of generic exit levels for hazardous constituents. For these reasons. EPA believes that it is inappropriate to attribute treatment costs to the Phase IV final rule for wood preserving contaminated media.

Contact: Bill Fu, Marketing Manager

Company: Rhone-Poulenc, Shelton, Connecticut

Phone: (203) 925-3300

Date: 8/19/91

Caller: Prakash Ramaswamy

Subject: Hazardous waste incineration capacity of all of Rhone-Poulenc's facilities.

Report of Discussion:

Mr. Fu provided updates on all incinerators owned by Rhone-Poulenc. Mr. Fu provided present and future capacities, waste acceptance,and permit status for each facility. He requested that information pertaining to capacities be classified as CBI.

NOTICE
If the filmed image is less clear than this Notice it is due to the quality of the document being filmed.

CD2F 003

0 7 8 8

Contact: Steve Change, Environmental Compliance Specialist

Company: Rollins, Baton Rouge, Louisiana

Phone: (504) 778-3607

Date: 8/20/91

Caller: Prakash Ramaswamy

Subject: Update of facility's hazardous waste incineration capacity.

Report of Discussion:

Explained and faxed capacity update form to Mr. Change. He indicated that form will be completed and returned.

NOTICE
If the filmed image is less clear than this Notice it is due to the quality of the document being filmed.

CD2F 003

0 7 8 9

NOTICE
If the filmed image is less clear than this Notice it is due to the quality of the document being filmed.

Contact: Eric Chokan, Supervisor of Marketing and Research

Company: Ross Incineration Services, Grafton, Ohio

Phone: (216) 748-2200

Date: 8/26/91

Caller: Prakash Ramaswamy

Subject: Update of facility's hazardous waste incineration capacity.

Report of Discussion:

Mr. Chokan provided present and future capacities for the facility, waste types accepted, permit status, RCRA waste codes on permit, and engineering specifications of incinerator. He requested the information be classified as CBI.

CD2F 003

0 7 9 0

Contact: Rudy Vingris, Marketing Manager

Company: Chemical Waste Management, Oak Brook, Illinois

Phone: (708) 218-1618

Date: 8/27/91

Caller: Prakash Ramaswamy

Subject: Capacity update for all of CWM's commercial incinerator facilities (SCA, TWI, Port Arthur)

Report of Discussion:

Explained and faxed capacity update form to Mr. Vingris. He indicated that form will be completed and returned. He also requested that information to capacities be classified as CBI.

NOTICE
If the filmed image is less clear than this Notice it is due to the quality of the document being filmed.

CD2F 003

0 7 9 1

Contact: Amos Weineke, Customer Service

Company: Aptus, Coffeyville, Kansas

Phone: (800) 292-2558

Date: 9/18/91

Caller: Prakash Ramaswamy

Subject : Confirm that facility accept F037/F038 wastes.

Report of Discussion:

Mr. Weineke confirmed that the facility can accept F037/F038 wastes.

NOTICE
If the filmed image is less clear than this Notice it is due to the quality of the document being filmed.

CD2F 003

0 7 9 2

Contact: Maxine Weldman, Technical Representative

Company: Rollins Environmental, Bridgeport, New Jersey

Phone: (609) 497-3100

Date: 9/18/91

Caller: Prakash Ramaswamy

Subject : Confirm that facility can accept F037/F038 wastes.

Report of Discussion:

Ms. Weldman confirmed that the facility can accept F037/F038 wastes.

NOTICE
If the filmed image is less clear than this Notice it is due to the quality of the document being filmed.

CD2F 003

0793

Contact: Edward Limb, Manager of RCRA Engineering Section

Company: Ohio Environmental Protection Agency, Columbus, Ohio

Phone: (614) 644-3020

Date: 10/07/91

Caller: Prakash Ramaswamy

Subject : Permit status, expected start up date for the Waste-Tech commercial hazardous waste incinerator in East Liverpool, Ohio.

Report of Discussion:

Mr. Limb reported that the facility received a final Part B permit in 1984 and that trial burns are scheduled for May 1992. He indicated that the facility will be on-line in February 1993.

NOTICE
If the filmed image is less clear than this Notice it is due to the quality of the document being filmed.

CD2F 003

0 7 9 4

Contact: Cheryl Hying, Engineer

Company: Utah Department of Environmental Quality, Division of Solid and Hazardous Waste, Salt Lake City, Utah

Phone: (801) 538-6170

Date: 11/12/91

Caller: Prakash Ramaswamy

Subject: Permit status, expected start up date for the USPCI commercial hazardous waste incinerator in Tooele, Utah

Report of Discussion:

Ms. Hying reported that the facility received a Part B from the state on November 1, 1991. She also reported that the facility is currently under construction and that trial burns are expected to start in late 1992. She estimates that facility should be on-line late in 1993.

NOTICE
If the filmed image is less clear than this Notice it is due to the quality of the document being filmed.

CD2F 003

0 7 9 5

Contact: Glenn Dively, Environmental Engineer

Company: Nebraska Department of Environmental Control, Lincoln Nebraska

Phone: (801) 538-6170

Date: 11/12/91

Caller: Prakash Ramaswamy

Subject: Permit status, expected start up date for the Waste-Tech commercial hazardous waste incinerator in Kimbell, Nebraska.

Report of Discussion:

Mr. Dively reported that the facility will receive a Draft Part B permit from the state in March 1992 to began construction of the incinerator and associated facilities and that trial burns are expected in November 1992. He indicated, barring any unexpected delays, the facility should be on-line in October 1993.

NOTICE
If the filmed image is less clear than this Notice it is due to the quality of the document being filmed.

CD2F 003

0 7 9 6

Contact: Rusty Lundberg, Manager of Planning and Project Development Section

Company: Utah Department of Environmental Quality, Division of Solid and Hazardous Waste, Salt Lake City, Utah

Phone: (801) 538-6170

Date: 11/12/91

Caller: Prakash Ramaswamy

Subject: Permitted capacities for the USPCI commercial hazardous waste incinerator facility in Tooele, Utah.

Report of Discussion:

Mr. Lundberg reported that the facility will have a total permitted capacity of 130,000 tons per year. He also indicated that the facility submitted a TSCA permit to USEPA (Region VIII) for burning PCB contaminated wastes.

NOTICE
If the filmed image is less clear than this Notice it is due to the quality of the document being filmed.

CD2F 003

0 7 9 1

NOTICE
If the filmed image is less clear than this Notice it is due to the quality of the document being filmed.

CEMENT KILN
FOLLOW-UP INFORMATION

CD2F 003

0 7 9 8

NOTICE
If the filmed image is less clear than this Notice it is due to the quality of the document being filmed.

Contact: Joe Galbraith

Company: EPA Region 7

Phone: (913) 551-7051

Date: 2 March, 1992

Caller: Lisette Lambregts

Subject: Issues pertaining to Region 7 cement kilns burning hazardous wastes.

Report of Discussion:

Compliance: Mr. Galbraith believes all facilities in Region 7 are progressing pretty smoothly toward certification. Two may be close (Heartland and Lafarge) but he believes they will all make it by the August 1992 deadline. Some have already completed test burns.

BTU limits: Should go away in Missouri and Nebraska, those two states haven't indicated any interest in setting up new regulations. Kansas will still have a 5 or 6,000 BTU/lb minimum, and a tax system for wastes under the minimum. Blenders will be able to "blend up", but the proportion of wastes under 5,000 BTU/lb will be taxed as if it were going to an incinerator.

Public opposition: Always exists, but he doesn't believe there is any opposition that will prevent kilns from burning wastes after 21 August, 1992.

CD2F 003

0 1 9 9

Contact: Ruben Casso

Company: EPA Region 6

Phone: (215) 655-6785

Date: 2 March, 1992

Caller: Lisette Lambregts

Subject: Issues pertaining to Region 6 cement kilns burning hazardous wastes.

Report of Discussion:

Discussion focused on Ash Grove, Foreman, AR, which is the only Region 6 kiln burning solids.
Compliance: Mr. Casso believes they are on schedule and should have no problem certifying compliance by 21 August 1992.

BTU limitation on kilns and blenders: Mr. Casso believes that *blenders* will still have to abide by a minimum BTU limit or 5,000 BTU/lb.

Public opposition: Mr. Casso isn't aware of any real threat to hazardous waste burning. There is always public opposition, and they'll know the extent of it better after the public comment period.

NOTICE
If the filmed image is less clear than this Notice it is due to the quality of the document being filmed.

CD2F 003

0 8 0 0

NOTICE
If the filmed image is less clear than this Notice it is due to the quality of the document being filmed.

Contact: Eric Hansen

Company: Ash Grove Cement

Phone: (913) 451-8900

Date: 5 March, 1992

Caller: Lisette Lambregts

Subject: Petroleum refining waste combustion capacity and inconsistencies between API and CKRC survey results.

Report of Discussion:

Mr. Hansen could not comment on how API conducted their questionnaire, because he does not recall speaking with them. It is possible for them to be "at capacity" on a given day in the winter, when the kilns are rotating through their routine downtime for maintenance, but over the course of the year they have excess capacity.

Mr. Hansen said that he always gives the same response when anybody asks about capacity: they have excess capacity for solids and liquids. Solids capacity is approximately half utilized, which transiates to approximately 10,000 tons of available capacity per year per kiln in each of Ash Grove's seven kilns. Also, they are not at their technical limit for solids burning, and their current "maximum practical capacity" could be increase still further. If the material is available, the capacity will follow shortly. Capacity is driven by demand.

Mr. Hansen said that relative to other hazardous wastes, F037 and F038 are ideal kilns feed because they have low metals and moderate BTU content.

CD2F 003

0 0 0 1

NOTICE
If the filmed image is less clear than this Notice it is due to the quality of the document being filmed.

Contact: Tom Patterson

Company: Louisiana Department of Environmental Quality

Phone: (514) 342-1354

Date: 10 March, 1992

Caller: Lisette Lambregts

Subject: BTU for Louisiana blenders

Report of Discussion:

Louisiana's interpretation of the sham recycling policy is that wastes under 5,000 BTU/lb do not add heating value, and are therefore being incinerated, not recycled. This will not change after kilns certify compliance with the BIF rule.

CD2F 003

0 8 0 2

Contact: Dan Nugent

Company: Heartland Cement

Phone: (215) 866-4400

Date: 10 March, 1992

Caller: Lisette Lambregts

Subject: Petroleum refining waste combustion capacity, and inconsistencies between API and CKRC survey results.

Report of Discussion:

At the time of the API/Gossman call, he had only been in his position for a month, and was still learning the ropes. He might have said he didn't know if they accepted K048-52, F037 and F038, and API conservatively took that as a no. Mr. Nugent said Ed Morton (Cemtech) would certainly know.

He does not know whether they are currently burning these wastes, but believes they are burning primarily solvents in their hazardous waste fuel program. Mr. Nugent believes Heartland is currently burning at their Missouri permitted limit. They are in the process of revising their permit to increase volumes and range of wastes accepted. They are hoping to combine test burns for this permit modification with their BIF test burns this spring.

NOTICE
If the filmed image is less clear than this Notice it is due to the quality of the document being filmed.

CD2F 003

0 8 0 0 3

Contact: Joe Ford

Company: Medusa Cement

Phone: (412) 535-4311

Date: 10 March, 1992

Caller: Lisette Lambregts

Subject: Petroleum refining waste combustion capacity and inconsistencies between API and CKRC survey results.

Report of Discussion:

Does not recall speaking with API or Gossman, but uncertain. Uncertain whether they accept F037 and F038 wastes.

NOTICE
If the filmed image is less clear than this Notice it is due to the quality of the document being filmed.

CD2F 003

0 8 0 4

NOTICE
If the filmed image is less clear than this Notice it is due to the quality of the document being filmed.

INCINERATOR
FOLLOW-UP INFORMATION

CD2F 003

0 8 0 5

Contact: Shaun Rooke, Waste Approval Manager

Incinerator: Aptus, Kansas

Location: Coffeyville, Kansas

Phone: (800) 292-2558

Date: 3 March 1992

Caller: Prakash Ramaswamy

Report of Discussion:

Current status of facility to accept K-listed (K048-K052) and F-listed (F037, F038) petroleum refining wastes:

- Mr. Rooke indicated that the facility is permitted to accept K048-K052, F037, and F038 wastes but is currently not accepting K048-K052 wastes due to cyanide treatment standards. The issue is not a technical restriction but rather a management decision. Mr. Rooke stated that F037/F038 wastes can be accepted but it will depend on cyanide concentration.

Methods of shipment of K-listed petroleum refining wastes to facility:

- The facility is currently not accepting any K-listed petroleum refining wastes. Mr. Rooke noted that previous shipments of K-listed petroleum refining wastes in roll-off bins were rejected due to free liquid in the roll-off bins.

NOTICE
If the filmed image is less clear than this Notice it is due to the quality of the document being filmed.

CD2F 003

0 8 0 6

Contact: Sharla Barber, Manager of Environmental Planning

Incinerator: Aptus, Utah

Location: Tooele, Utah

Phone: (801) 521-9040

Date: 5 March 1992; 6 April 1992

Caller: Prakash Ramaswamy

Report of Discussion:

This new facility is presently conducting trial burns. The facility expects to complete the trial burn process in May, 1992.

Current status of facility to accept K-listed (K048-K052) and F-listed (F037, F038) petroleum refining wastes:

The facility can accept K048- K052 wastes but it cannot accept F037 and F038 wastes. The issue is not a technical restriction but rather a permitting limitation. Ms. Barber hopes that the facility will be permitted to accept F037/F038 by May 1992, but considers that an optimistic estimate.

Current methods of shipment of K-listed petroleum refining wastes to facility:

- Ms. Barber reported that all K-listed petroleum refining wastes except one load have been shipped in roll-off bins. The exception was a pressure tanker which was rejected due to the sludge's viscosity.

Frequency of K-listed wastes being received by the facility:

- The facility began burning waste on Dec. 16, 1991. The facility is currently accepting approximately forty cubic yards per day in roll-off bins.

Rejection rates of petroleum refining wastes at facility:

- Ms Barber reported that the one load of K-listed petroleum refining waste which was considered a pumpable sludge was rejected by the facility. The 40% water/ 60% sludge mixture was shipped in a pressure tanker. The load was rejected because the sludge portion had a viscosity greater than the 10,000 maximum centpoise operating limit of the cement pump used at the facility.

NOTICE
If the filmed image is less clear than this Notice it is due to the quality of the document being filmed.

CD2F 003

0 0 0 7

- Ms. Barber reported that the consistency of the dewatered K-listed petroleum refining sludges has been amenable to the bulk solid feed system.

Feed systems at facility that currently process or have the ability to process petroleum refining wastes:

- Pumpable sludges: Ms Barber indicated that pumpable sludges with viscosities less than 10,000 centipoise can be incinerated as a pumpable sludge. Pumpable sludges can be shipped in bulk tankers. The waste does not have to be colloidal in nature, but any material settling out of solution must have a viscosity less than 10,000 centpoise.

- Bulk solids: Ms. Barber indicated that the apron feeder/clamshell system is amenable to dewatered petroleum refining filtercakes.

- Containerized Solids: Ms. Barber reported that petroleum refining wastes can be processed at the facility in containers. She indicated there are no operational or technical restrictions to incinerating K-listed petroleum refining sludges in containerized form.

Operating capacity of facility:

- Bulk Solids: The facility has burned up to 12,000 lb/hr during trial burns. The facility is considering negotiating with the state to change the current permitted rate of 10,000 lb/hr, to 12,000 lb/hr. Ms. Barber indicated that the facility can operate at this rate for 18 hours per day but she estimates that the facility will operate 13 hours/day when the facility becomes fully operational.

- Containerized Solids: The facility is currently burning 20 55-gallon drums per hour. Ms. Barber indicated that this facility will be able to burn containerized solids at this rate for 13 hours per day when the facility becomes fully operational.

- Pumpable sludges: The facility is currently burning 5,000 lb/hr. Ms. Barber estimates that the facility will be able to burn pumpable sludges at this rate for 13 hr/day when the facility becomes fully operational.

Other factors that could affect available capacity:

- Storage space at the facility is limited to 12,000 yd^3 for bulk solids and 35,000 gallons for pumpable sludges.

NOTICE
If the filmed image is less clear than this Notice it is due to the quality of the document being filmed.

CD2F 003

0 0 0 8

- Ms Barber indicated that because the facility is new, most of the problems that are inhibiting available capacity involve administrative aspects of the facility, i.e. waste profile review, lab sample turnaround, scheduling for slots, etc.

- Ms. Barber indicated that TSCA waste i.e. PCBS, will not be make up a large percentage of bulk solid wastestreams accepted by the facility. Present market conditions indicate that PCBs will be shipped in liquids or containerized form.

NOTICE
If the filmed image is less clear than this Notice it is due to the quality of the document being filmed.

CD2F 003

0 8 0 9

Contact: Sharla Barber, Manager of Environmental Planning

Incinerator: Aptus, Utah

Location: Tooele, Utah

Phone: (801) 521-9040

Date: 4 June 1992

Caller: Prakash Ramaswamy

Report of Discussion:

This new facility completed trial burns in May 1992. The facility is expecting to receive trial burn results in July 1992.

Current status of facility to accept K-listed (K048-K052) and F-listed (F037, F038) petroleum refining wastes:

- The facility can accept K048-K052 wastes but it cannot accept F037 and F038 wastes. Ms. Barber indicated that a Class II modification will be submitted shortly in order to add the newly listed petroleum refining waste codes to the facility's permit. Ms Barber hopes that the facility will be permitted to accept F037/F038 wastes by August 1992.

Frequency of K-listed wastes being received by the facility:

- The facility is currently accepting approximately forty cubic yards per day in roll-off bins.

Current and planned capacity of the facility:

- Current available, utilized, and planned capacity has not changed since previous discussions with Ms. Barber. Ms. Barber indicated that facility's capacity, and any associated limitations will be dependent on trial burn results.

Anticipated increase of newly-listed petroleum refining wastes received by facility:

- The facility presently can not accept F037/F038 wastes. Ms. Barber indicated that the facility is not planning to reserve capacity for F037/F038 wastes when the facility becomes permitted to burn those wastes.

NOTICE
If the filmed image is less clear than this Notice it is due to the quality of the document being filmed.

CD2F 003

0 8 1 0

Contact: Mark Gynn

Company: Chemical Waste Management

Location: Oak Brook, Illinois

Phone: (708) 218-1749

Date: 6 March 1992

Caller: Prakash Ramaswamy

Report of Discussion:

Mr. Gynn believes that there is not enough nationwide treatment capacity for F037/F038 wastes. He indicated that F037-F038 wastes will have a lower heat content value than the minimum usually required for fuel blenders. Mr. Gynn provided a list of fuel blending facilities that have sludge/solid processing capability. The facilities are GSX/Laidlaw, USPCI, and Safety Kleen. Mr. Gynn confirmed current management practices of facilities within the CWM system that could process/treat wastes that have physical characteristics similar to F037/F038 wastes.

K048-K052 wastes are currently processed in one of two ways:

- Pumpable sludges (in containerized form) are shipped, processed, and repacked into burnable containers at CWM, (Emelle, Alabama). Repackaged wastes are then shipped to either CWM, Sauget, Illinois (TWI) or CWM, Port Arthur, Texas.

- Bulk solids with low heat content, water content, and high solids content can be shipped directly to CWM, Port Arthur, Texas.

NOTICE
If the filmed image is less clear than this Notice it is due to the quality of the document being filmed.

CD2F 003

0 8 1 1

NOTICE
If the filmed image is less clear than this Notice it is due to the quality of the document being filmed.

CD2F 003

0 0 1 2

Contact: Darrell Lentz

Company: Rhone-Poulenc Basic Chemicals Co.

Phone: 504-359-3735

Date: 27 February, 92

Caller: Gary Light

Subject: Petroleum Refining Waste Management at Rhone-Poulenc (RP)

Report of Conversation:

Current Management of K048-52

RP's Baton Rouge plant currently receives K048-52 from 3 major refineries, and is in the process of approving waste profiles for several additional refineries. Some DAF float (K048) is also carrying the F037/38 codes. The Baton Rouge plant received 14,000 tons of petroleum refining wastes in 1991, which it incinerated as pumpable sludge. The facility did see an increase in the second half of 1991, but it was not due to new waste generation. The increase came from a contract for a waste stream that had been going to another commercial treatment facility.

Market Factors

By the end of 1992, RP expects to see declines in the amount of petroleum wastes it receives as it loses customers to on-site thermal drying and delisting. RP also anticipates more petroleum refining sludges going to cement kilns. This facility has seen wide variability in the heating value of petroleum refining wastes, and noted that cement kilns often rely on "cutting" the sludges with higher heating value wastes to ensure a consistent mix. Blenders play a key role in this process, and RP is aware of cases where winter shutdowns at cement kilns have caused delays for waste generators.

Capacity for F037/38

RP's Baton Rouge facility is limited by its storage capacity. Under current constraints, the Baton Rouge facility could accept about one third more petroleum refining wastes than it is currently receiving. The facility plans to complete a 157,000-gallon tank in October 1992. This tank will greatly increase the facilities practical throughput capacity.

Contact: Rusty Dunn, Waste Approval Manager

Incinerator: Rollins

Location: Deer Park, Texas

Phone: (713) 930-2420

Date: 4 March 1992, 9 March 1992

Caller: Prakash Ramaswamy

Report of Discussion:

Current status of facility to accept K-listed (K048-K052) and F-listed (F037, F038) petroleum refining wastes:

- The facility is permitted to accept K048-K052, F037, and F038 wastes.

Current methods of shipment of K-listed wastes received by facility:

- Currently 95% of petroleum refining wastes are being shipped in roll-off bins. He stated that dewatered K-listed sludges have a "crumbly" not a "tacky" consistency.
- Mr. Dunn indicated that less than 5% of K048-K052 wastes are shipped in containers.

Rejection rates of K-listed wastes shipped to facility:

- Mr. Dunn could not report rejection rates for the facility.

Frequency of petroleum refining wastes received by facility:

- The facility regularly accepts K-listed petroleum refining waste. Mr. Dunn did not see an increase of K048-K052 wastes being shipped to the facility during the second half of 1991.

Feed systems at facility that currently process or have the ability to process petroleum refining wastes:

- Pumpable sludge: Mr Dunn indicated that dewatered filtercakes are not amenable to the facility's pumpable sludge system.

NOTICE
If the filmed image is less clear than this Notice it is due to the quality of the document being filmed.

CD2F 003

0 0 1 3

- Bulk solids: Mr. Dunn reported that to be amenable to the bulk feed system, wastes should have a water content less than 40% and a heat content less than 5,000 BTU/lb. He indicated that K048-K052 wastes that have been shipped have met these criteria. He indicated the facility can add drying agents to the waste to decrease moisture content, but this has not been required for K-listed petroleum refining wastes. Bulk solids at the facility are processed exclusively through the rotary reactor. The facility is currently processing 90 cubic yards (three 30 cubic yard bins) per day. Mr. Dunn indicated that the facility can process 150 cubic yards per day under current storage capacity limitations of 100 roll-off bins. According to Mr. Dunn, current available capacity is 20 roll-off bins.

- Containerized solids: Mr. Dunn reported that there is no technical restriction for incinerating K-listed petroleum refining wastes at the facility. Mr. Dunn reported that currently one-third of container throughput capacity is being utilized. Storage capacity for containers is 25,000 drums. Mr. Dunn did not provide available capacity for container storage.

- Nonpumpable sludges: Mr. Dunn indicated that nonpumpable sludges for this facility should have been distributed between containerized solids and bulk solids in EPA's capacity analysis. He believes that for treatment train #1, all nonpumpable sludge capacity should have been classified as containerized solids capacity. For train #2, nonpumpable sludge capacity should have been distributed evenly between containerized solids capacity and bulk solids capacity.

NOTICE
If the filmed image is less clear than this Notice it is due to the quality of the document being filmed.

CD2F 003

0 8 1 4

NOTICE
If the filmed image is less clear than this Notice it is due to the quality of the document being filmed.

Contact: Mr. Rusty Dunn

Incinerator: Rollins Environmental Services (TX) Incorporated

Phone: (713) 930-2420

Date: 20 May 1992

Caller: Gary Light

Subject: Incineration capacity for F037/F038

Mr. Dunn indicated that the Deer Park facility is currently receiving a significant quantities of K048-52, and that the rotary reactor system is largely dedicated to these wastes. Mr. Dunn provided the following information regarding the facility's capacity for petroleum refining sludges including F037 and F038:

- The rotary reactor is limited to 33 million BTUs per hour;
- The average heating value of K048 to K052 wastes received at the facility is somewhere in the area or 3,000 to 4,000 BTUs per pound;
- The rotary reactor is operational 85 percent of the time on average;
- The facility currently receives about 3 roll-off bins of K048-52 per day, and each 30 yard bin contains roughly 20 tons of waste;
- Under current storage limitations, the facility could receive an average of 5 roll-off bins per day;
- The only reason the facility would reject additional K048-52 would be if a particular waste contained very high metals levels (e.g., thousands of parts per million of lead, arsenic, or chromium). Mr Dunn could not estimate the fraction of petroleum refining wastes that are currently rejected;
- The facility also has the capacity to repackage wastes into drums on site to feed them to one of the two rotary kilns;
- The two rotary kilns currently operate in slagging mode, but could be run in non-slagging mode and 50 percent dedicated to petroleum refining sludges if warranted by demand. Such a change would add roughly 4,000 pounds per hour of capacity for F037 and F038, but would displace other wastes.
- The facility is taking new customers and was planning to shutdown the rotary

CD2F 003

0 0 1 5

reactor over Memorial Day Weekend due to a lack of waste.

NOTICE
If the filmed image is less clear than this Notice it is due to the quality of the document being filmed.

CD2F 003

0 0 1 6

Contact: Eric Chokan

Incinerator: Ross Incineration

Location: Grafton, Ohio

Phone: (216) 748-2172

Date: 11 March 1992

Caller: Prakash Ramaswamy

Report of Discussion:

Current status of facility to accept K-listed (K048-K052) and F-listed (F037, F038) petroleum refining wastes:

- The facility can accept K-listed (K048-K052) wastes and F-listed (F037, F038) wastes.

Current methods of shipment of K-listed wastes received by facility:

- The company received K-listed wastes in 1991 in bulk solids form.

Frequency of petroleum refining wastes received by facility:

- The facility began receiving K-listed petroleum refining wastes during the summer of 1991. During the second half of 1991, the volumes of K-listed shipped to the facility decreased due to increased competition from the cement kiln industry.

Capacity: A replacement kiln came on-line in December 1991. Maximum and available capacity estimates for the replacement kiln were not readily available, but Mr. Chokan offered to provide maximum and available capacity estimates at a later date.

NOTICE
If the filmed image is less clear than this Notice it is due to the quality of the document being filmed.

CD2F 003

0 8 1 7

NOTICE
If the filmed image is less clear than this Notice it is due to the quality of the document being filmed.

Contact: Al Pagano

Company: Dupont Chambers Works

Phone: (609) 540-4106

Date: 5 March, 1992

Caller: Lisette Lambregts

Subject: F039 (leachate) treatment

Report of Discussion:

They generate and receive multi-source leachate (F039) sludges and solids from offsite. After the variance expires May 8, 1992 they intend to burn it in an on-site incinerator.

He did caution that if anything happens to the incinerator, they may need to store the waste temporarily, or even send it off site. Currently the incinerator is working fine, and they are not planning to ship F039 sludges and solids to commercial combustion facilities after the variance expires.

CD2F 003

0 8 1 8

NOTICE
If the filmed image is less clear than this Notice it is due to the quality of the document being filmed.

Contact: Mark Moses

Company: GE Waterford

Phone: (518) 233-2254

Date: 3 March, 1992

Caller: Lisette Lambregts

Subject: F039 (leachate) treatment

Report of Discussion:

They do not like to respond to phone surveys, but he did indicate that the expiration of the variance will not affect them.

CD2F 003

0 0 1 9

NOTICE
If the filmed image is less clear than this. Notice it is due to the quality of the document being filmed.

Contact: Jerry Hoppee

Company: Chemical Waste Management, CID Landfill

Phone: (312) 646-6660

Date: 3 March, 1992

Caller: Lisette Lambregts

Subject: F039 (leachate) treatment

Report of Discussion:

They have not received any F039 sludges and solids in the last year.

CD2F 003

0 0 2 0

NOTICE
If the filmed image is less clear than this Notice it is due to the quality of the document being filmed.

Contact: Roger Fuchs

Company: Chemical Waste Management, CID Landfill

Phone: (312) 646-6660

Date: 9 March, 1992

Caller: Lisette Lambregts

Subject: F039 generation and management

Report of Discussion:

After the expiration of the multi-source leachate variance on 8 May 1992, they will treat F039 sludges and solids on site through lime stabilization and sludge drying. Sludges will not go off site, and will not require commercial combustion capacity.

CD2F 003

0 8 2 1

NOTICE
If the filmed image is less clear than this Notice it is due to the quality of the document being filmed.

INTERMEDIATE PROCESSORS
FOLLOW-UP INFORMATION

CD2F 003

0 8 2 2

CADENCE CHEMICAL RESOURCES, INC.
ONE MARINE DRIVE · MICHIGAN CITY, INDIANA 46360
219 879-0371 · FAX 219 879-0590

NOTICE
If the filmed image is less clear than this Notice it is due to the quality of the document being filmed.

May 3, 1990

Mr. William K. Reilly
Administrator
U.S. Environmental Protection Agency
401 M Street, S.W.
Washington, D.C. 20460

Dear Mr. Reilly:

We are most disturbed by Don R. Clay's memo of April 24, 1990 regarding the "Third Third Final Rule" for the RCRA land ban. We understand you intend to sign the final rule no later than May 8.

Our basic problem is with the last paragraph of the memo. Mr. Clay announces his intent to recommend a one-year national capacity variance for all K048-52 wastes. He states: "Our analysis indicates that there is currently inadequate treatment capacity for generated K048-52 wastes."

As May 8 is only a few days away, we must urgently call your attention to the fact that there is currently available treatment capacity for a significant portion of this waste, and that more treatment capacity will soon be available. We strongly urge you to consider this information in making your final decision.

Cadence has developed and patented technologies for recycling hazardous waste fuel (HWF) for use in cement kilns. (See attached patent.) Along with cement companies such as Ash Grove Cement Company and Southdown, Inc., we have several HWF-burning projects now fully underway and several more coming on-line in the next few months.

Unlike others who manage HWF for cement kilns, our patented technology involves the use of "solid" (non-pumpable) HWF. We have kept EPA personnel closely informed of developments in the solids area, and EPA has obtained extensive stack test data from our cement kilns both from EPA's testing and our own which clearly show the environmental integrity of our process. Many K048-52 waste streams are readily usable as solid HWF in facilities using the Cadence technology.

CD2F 003

We have commented extensively on your pending proposals relating both to industrial furnace burning and to the "Third Third." In those comments, we have submitted extensive documentation of the efficacy of our process. Based on data we and others have submitted, EPA has found that cement kilns are "ideally suited" devices to burn HWF. 52 Fed. Reg. 1698b, May 6, 1987.

In the past, availability of cement kiln HWF capacity has been a key factor in EPA's decision not to grant national capacity variances for certain wastes (such as "California list HOCs"). EPA also specified "fuel substitution" as BDAT for several waste codes in the "Third Third" proposal, and EPA personnel have made clear to us that this was done in large part to avoid granting national capacity variances.

Thus, EPA's consistent policy has been to fully consider cement kiln capacity before granting national capacity variances, and we fear that Mr. Clay's recommendation is a clear departure from this policy. The result will be that -- contrary to congressional and agency policy -- large volumes of wastes will go untreated before land disposal even though the treatment capacity for such wastes exist.

Before turning to the specifics of our capacity, I should note that we must alert you to a few basic legal concerns over Mr. Clay's recommendation. First, EPA never proposed to grant a blanket national capacity extension for K048-52 wastes. It proposed an extension only for those constituents for which EPA was proposing more stringent BDAT controls than specified in the First Third. In fact, because of some confusion in the Third Third preamble in this respect (54 Fed. Reg. 48472), our representative contacted Ms. Bassi, the EPA "national capacity" contact listed in the preamble. She explained quite clearly on February 23 that EPA was not proposing an extension with respect to the unchanged standards.

Second, we believe EPA is without authority to "move" waste codes from the First to the Third Third once final standards have been set for them. EPA certainly did not propose to do this. In fact, in a discussion on an analogous situation in the Third Third proposed preamble, EPA stated: "Any other interpretation would result in EPA's extending the date of a prohibition beyond the dates established by Congress, and therefore beyond EPA's legal authority." 54 Fed. Reg. 48489.

As to Mr. Clay's key assumption -- a lack of capacity -- we can offer the following information for your consideration. Ash Grove currently has available a maximum annual capacity to accept

NOTICE
If the filmed image is less clear than this Notice it is due to the quality of the document being filmed.

CD2F 003

0 8 2 4

105,000 tons of K048-K052 wastes.[1] This capacity exists at the following authorized and operating Ash Grove kilns:

Foreman, Arkansas facility
- Kiln #2 22,000 tons
- Kiln #3 22,000 tons

Chanute, Kansas facility
- Kiln #1 26,000 tons
- Kiln #2 26,000 tons

Louisville, Nebraska facility
- Kiln Hum 10,000 tons
- Kiln ACL 26,000 tons

(Of this total capacity of 132,000 tons, only 27,000 tons are currently being used, leaving 105,000 tons currently available.)

In addition to the Ash Grove kilns, Southdown is in the final stages of authorization for two kilns located in Louisville, Kentucky and Knoxville, Tennessee. Each is expected to be operating by August, 1990. The Louisville kiln will have a maximum annual capacity of 26,000 tons, and the Knoxville kiln a capacity of 70,000 tons. Together they will add another 96,000 tons of annual capacity. Thus, the combined maximum capacity that will be available by August, 1990 is 201,000 tons.

Both Ash Grove and Southdown are also in the process of retrofitting facilities or seeking necessary approvals to burn HWF at additional facilities. It is anticipated that in 1991 an additional 131,000 tons of capacity will become available at the following facilities:

---

[1] In our January 8, 1990 comments on the Third Third regulations we indicated that 90,000 tons of annual capacity existed for solids energy recovery. That estimate did not include the Louisville ACL kiln that has since come on-line. Also, modifications to the solids feed mechanism have allowed kilns to increase the rate of admitting solids, thereby increasing capacity.

NOTICE
If the filmed image is less clear than this Notice it is due to the quality of the document being filmed.

CD2F 003

0 8 2 5

NOTICE
If the filmed image is less clear than this Notice it is due to the quality of the document being filmed.

CD2F 003

0 0 2 6

Ash Grove
Foreman, Arkansas
Kiln #1 26,000 tons

Southdown
Fairborn, Ohio 27,000 tons
Odessa, Texas 26,000 tons

3rd Licensee[2] 52,000 tons

We are aware that past EPA studies have assumed a need for as much as 600,000 tons of capacity per year. However, our analysis demonstrates that the total quantity of such wastes generated is actually about 350,000-400,000 tons annually.

Our numbers are based on a survey of K048-K052 wastes undertaken by Cadence in January 1990 to determine how many of these wastes are capable of being used for energy recovery. One hundred fifteen (115) of the 181 active refineries in the United States responded with data on volumes of K048-K052 hazardous wastes generated, dewatering processes employed, and disposal options used. Our analysis of this current data indicates that past EPA estimates significantly over-estimate the amount of waste generated and thus, the treatment capacity needed. We believe the current reduction in the total quantity of wastes generated is the result of several factors, including a reduction in the number of refineries now operating, more widespread use of modern dewatering techniques, and waste minimization efforts by the refineries.

Since heat content is an important consideration in the use of any fuel source, Cadence analyzed samples received from 22 refineries at the 5000 Btu level, since this is a commonly used minimum level when evaluating wastes for energy recovery applications. Our analysis shows that 25-30% of these K048-K052 wastes are above 5000 Btu per pound and thus, can be used for energy recovery in cement kilns.

In addition, by modifying current dewatering techniques to eliminate the use of filter aids, filter cakes in the 4000-4500 Btu/pound range could be increased to 5000-5500 Btu/pound. Our

---

[2] Active negotiations are underway to license an additional company, currently permitted to receive HWF fuel, to use the Cadence patent for burning solid HWF.

current evaluation indicates that such changes could make an additional 20-25% of K048-K052 wastes available for use in energy recovery.

In sum, it appears that of the 350,000-400,000 tons of K048-K052 wastes currently generated, an estimated 125,000 to 175,000 tons could be used for energy recovery with Cadence's technology. And as demonstrated above, available capacity exists to handle these wastes.

You may note from the data supplied above that some of our capacity is not currently available, but is projected to become available within the next six months. This should not be a problem, as all generators of these wastes can store on-site for 90 days even if they are not RCRA T/S/D facilities. For those that are T/S/D facilities, they may store on-site for up to one year if they are accumulating for valid land ban treatment.

At the very least our data suggest that a one-year extension is wholly unwarranted. In light of the fact that we have capacity on-line now and will have additional capacity on-line in six months, we urge as an alternative that only a 6-month extension be granted. Although we believe our start-up projections to be accurate, EPA would always have the discretion to grant further variances if our projections prove incorrect. EPA has previously recognized that this approach is more consistent with congressional intent to ban land disposal at the earliest possible time. (See 51 Fed. Reg. 1693, column 2, January 14, 1986.)

Finally, at a minimum EPA must exclude from any national capacity variance petroleum refining wastes capable of being used for energy recovery. Our data clearly demonstrate adequate existing capacity for these wastes. As EPA itself stated in the preamble to the Third Third regulations "there is clearly no reason to grant national capacity variances when EPA can define a reasonable subcategory for prohibited wastes for which there exists treatment capacity." (54 Fed. Reg. 46474, column 3.) In excluding K048-K052 wastes capable of being used for energy recovery from any national variance EPA should consider the need to discourage practices designed to lower the Btu content so as to make these wastes unusable for energy recovery.

NOTICE
If the filmed image is less clear than this Notice it is due to the quality of the document being filmed.

CD2F 003

0 0 2 7

Thank you for your consideration of these comments.

Very truly yours,

Theodore J. Reese

Theodore J. Reese
President

NOTICE
If the filmed image is less clear than this Notice it is due to the quality of the document being filmed.

CD2F 003

0 8 2 8

United States Patent [19]

Benoit et al.

[11] Patent Number: 4,850,290

[45] Date of Patent: Jul. 25, 1989

[54] **[illegible] FOR ENERGY RECOVERY FROM SOLID HAZARDOUS WASTE**

[75] Inventors: Michel R. Benoit, Greene, R.I.; Eric R. Hansen, Shawnee, Kans.; Theodore J. Reese, Michigan City, Ind.

[73] Assignees: Ash Grove Cement Company, Overland Park, Kans.; Cadence Chemical Resources, Inc., Michigan City, Ind.

[21] Appl. No.: 275,402

[22] Filed: Nov. 23, 1988

[51] Int. Cl.[4] F23G 7/04

[52] U.S. Cl. 110/346; 110/237; 110/238; 110/246

[58] Field of Search 110/346, 237, 238, 246

[56] References Cited

U.S. PATENT DOCUMENTS

3,572,524	3/1971	Muckenhoun .	
3,832,651	7/1974	Harris et al. .	
3,923,091	12/1975	Yoshida et al. .	
3,986,624	10/1976	Cates, Jr. et al. .	
3,987,916	10/1976	Cates, Jr. et al. .	
4,022,629	5/1977	Garrett et al. .	
4,081,285	3/1978	Pennell .	
4,238,237	12/1980	Jarrett et al. .	
4,295,823	10/1981	Ogawa et al. .	
4,315,712	2/1982	Seglias	110/346 X
4,318,713	3/1982	Lee et al. .	
4,374,704	2/1983	Young .	
4,389,242	6/1983	Baker et al. .	
4,419,943	12/1983	Feurholdt	110/237

OTHER PUBLICATIONS

"Hazardous Waste as Supplemental Fuel for Cement Kilns", Peters, Higgins, and Chadbourne, Proc. Natl. Waste Process Conf., 12th, 1986.

"Burning Hazardous Waste in Cement Kilns", Chadbourne and Heimstetter, presentation at the 76th Annual Meeting of the Air Pollution Control Association, Atlanta, Ga. 6/19-24/83.

Primary Examiner—Edward G. Favors

[57] ABSTRACT

A method is described for environmentally sound usage of combustible hazardous waste in an operating rotary kiln. The method is particularly adapted for disposal of solid hazardous wastes, optionally in the form of a blended waste homogenate, packaged in sealable containers. The containers are used as fuel modules and charged into a rotary kiln cylinder where kiln gas temperatures range from about 950° to about 1200° C. to achieve high destruction and removal efficiencies.

20 Claims, 2 Drawing Sheets

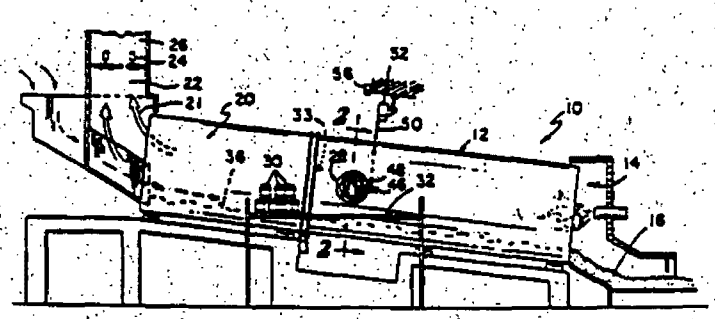

NOTICE
If the filmed image is less clear than this Notice it is due to the quality of the document being filmed.

CD2F 003

0 8 2 9

METHOD FOR ENERGY RECOVERY FROM SOLID HAZARDOUS WASTE

FIELD OF THE INVENTION

The present invention relates to use of hazardous wastes in rotary kilns. More particularly, this invention is directed to a method for accomplishing environmentally sound disposal of hazardous wastes comprising combustible waste solids and the recover their available energy values in mineral processing kilns.

BACKGROUND AND SUMMARY OF THE INVENTION

Solid combustible wastes have always been generated by industry. Many of such wastes, because of their flammable or toxic character, are categorized by applicable environmental regulations as "hazardous wastes". Prior to governmental regulation of the disposal of such materials, they were disposed of by dumping in landfill operations. Significant environmental damage has been cause by those practices. With recently enacted environmental regulations imposing severe restrictions on landfill-type disposal of hazardous wastes, the only viable means for their safe disposal has been by thermal treatment, typically at high cost in specialized hazardous waste incinerators equipped with extensive emission control devices.

Cement kilns have received favorable review from both federal and state environmental regulatory agencies as providing ideal conditions for disposal of combustible waste materials. Not only does the burning of hazardous waste in operating kilns allow recovery of energy values from hazardous wastes, but also, because of their high operating temperatures, long residence times and their ability to provide favorable conditions for the chemical combination of inorganic residues into the active compounds of portland cement, such operations provide ideal conditions for environmental sound disposal of combustible hazardous waste materials.

However, because of problems unique to the handling and burning of solid hazardous waste in operating kilns, regulation compliant disposal of hazardous wastes in operating kilns has been limited to combustible liquid or "pumpable" hazardous waste. Liquid waste materials are easily blended with each other and with conventional fuels to provide homogeneous liquids that can be burned in the gaseous phase at the firing end of the kiln with little or no modification of kiln burner configuration. Solid hazardous wastes, however, can occur in a multiplicity of forms, from hard crystalline solids to viscous, sticky sludges. They are not easily blended and they present significant engineering challenges for their safe handling and delivery into rotary kilns. Further, the burning of combustible solids in the firing chamber of a kiln faces other practical problems. Hazardous waste solids are not easily dispersed into the flame of the burning primary fuel. If waste solids are charged into the primary combustion zone, they will necessarily come into contact with the mineral bed at a very critical time in the clinker-forming process. It is important for the formation of quality clinker, both in terms of color and performance, that oxidizing conditions be maintained in the clinker-forming zone of the kiln. Charging combustible solids onto the forming clinker at temperatures in excess of 1300° C. can create reducing conditions in the forming clinker and adversely affect cement quality.

Before promulgation of existing EPA air quality regulations, it was a practice to charge combustible solid waste into the cold end of the kiln with the to-be-processed mineral materials. Such practices continue in countries where emission standards are not in effect or not enforced. Today, however, without added expensive emission control equipment, combustible solid hazardous waste cannot be charged to the cold end of the kiln and still allow the kiln to operate in compliance with environmental regulations controlling kiln emissions. Combustible solid hazardous waste by definition can contain a wide range of volatile organic substances. Combustible hazardous waste solids, added with the raw material to the "cold" or upper end of a conventional kiln, without combustion gas afterburners or other emission control equipment, results in unacceptable levels of hydrocarbon emissions. As the raw material and waste solids move down the kiln cylinder to higher and higher temperature zones, volatile components are driven off into the effluent gases at temperatures below those required for thermal degradation of the volatilized components. The result is discharge of a significant amount of the volatile compounds into the atmosphere. Particulate residue fuels with low volatiles content can be added either to the mineral material introduced at the cold end of the kiln or to the calcining zone with efficient energy value usage and apparently without notable problems with hydrocarbon emission levels. See, for example, U.S. Pat. No. 4,022,629 and references cited therein.

Combustible hazardous waste solids represent a significant potential source of inexpensive energy to the energy intensive mineral processing industry. However, concerns about waste handling, plant engineering, end-product quality and emission control has deterred kiln operators from taking advantage of the inexpensive energy values available through burning of hazardous waste solids. That has been true particularly in view of the availability of, and the environmentally sanctioned use of, hazardous waste liquids as inexpensive alternate fuels for kiln operations. However, with the promulgation of environmental regulations imposing severe restriction on land disposal of solid hazardous wastes, and the limited availability (and high costs) of EPA-approved complete combustion facilities, there has been a significant effort directed toward the development of alternate means for safe disposal of solid hazardous wastes. The present invention evolved from that effort.

One object of this invention is to provide a safe, environmentally acceptable method for disposal of hazardous waste materials, including particularly hazardous waste solids, which contain significant levels of combustible and/or toxic organic compounds and toxic inorganic substances. It is another object of this invention to provide a method of recovering energy values of solid combustible hazardous waste materials and of using such materials to provide up to 40% or more of the energy requirements of kiln operation. The method is fully compliant with applicable environmental emission regulations, and it also allows for the most efficient use of the waste materials as fuel in the process without compromising quality of the processed mineral product.

One aspect of the invention comprises a unique configuration of hazardous waste processing, packaging (containerization), and kiln charging techniques which enables kilns to use controlled quantities of hazardous

NOTICE
If the filmed image is less clear than this Notice it is due to the quality of the document being filmed.
CD2F 003
0 8 3 0

NOTICE
If the filmed image is less clear than this Notice it is due to the quality of the document being filmed.

CD2F 003

0 8 3 1

wastes as supplemental fuel while maintaining compliance with environmental emission standards and minimizing the risk of personal injury to individuals handling of the waste products.

This has been practiced by preparing fuel modules of containerized hazardous wastes. Most preferably the hazardous waste is packaged in portions having energy values within a predetermined energy value range. The fuel modules are charged into an operating kiln at a point where the temperature and process conditions assure environmentally sound disposal of both volatile and non-volatile waste components and where energy and material content of the waste material most efficiently contribute to the mineral processing operation. Containers of the combustible hazardous waste are charged to the kiln at regular intervals at a point in the kiln where kiln gas temperatures range from about 950° to about 1200° C., more preferably from about 950° C. to about 1100° C. These temperatures are high enough to assure complete combustion of volatilized components but not so high that where the process is conducted in a mineral processing kiln, the presence of the combustible non-volatile portion of the charged waste in the mineral bed creates conditions detrimental to product quality.

One embodiment of the invention is an apparatus that enables the charging of solid fuel or containerized fuel through the wall of a rotating kiln cylinder. A port, preferably with a mechanical closure in the kiln cylinder wall is aligned with a drop tube inside the kiln cylinder. The drop tube prevents hot mineral material in the kiln from escaping through the port or contacting the closure. Fuel is delivered to the kiln through the port and the drop tube at predetermined times during kiln cylinder rotation.

Blending hazardous waste material to form hazardous waste homogenates prior to containerization facilitates process control and minimizes perturbation of kiln operation conditions by assuring some uniformity (from container to container) in terms of waste composition, form, energy value and combustion characteristics. Containerization of the hazardous waste, preferably as a hazardous waste homogenate, not only provides a safe and convenient means for handling and shipping of hazardous wastes, but it also seems to play an important role in the satisfactory degradation of the contained waste, particularly the volatile portion, in the kiln. Sealed containers of hazardous wastes are charged into the kiln at a point where kiln gas temperatures are high enough to decompose or complete combust volatile components driven into the gas stream. It is important that the volume of volatile components not exceed the capacity for their complete combustion in the gas stream. With the hazardous waste in sealed containers or modules, release of the volatile components of the contained hazardous waste into the kiln gas stream occurs over a period of time commensurate with the time for melting or disintegration of the container itself. Containerization of the waste therefore minimizes the potential for overloading the complete combustion capacity of the kiln gas stream with volatile organics. The result is a destruction and removal efficiency (DRE) of principal organic hazardous constituents (POHC's) of 99.99% and higher for the process.

Introduction of the containerized waste in the 950°-1200° zone of the kiln not only assures acceptable complete combustion of volatile components but also enables efficient use and disposal of the non-volatile components. Combustible non-volatile components are burned while in contact with the calcining mineral material allowing for high heat transfer efficiency. The inorganic components of the non-volatile residue come into immediate contact with and react chemically with the free calcium oxide forming in the mineral bed to become incorporated into the cement materials and rendered non-hazardous.

BRIEF DESCRIPTION OF THE DRAWINGS

FIG. 1 is a schematic representation of a conventional rotary kiln equipped with the present fuel charging apparatus.

FIG. 2 is a cross-sectional view of the kiln cylinder taken along the line 2—2 of FIG. 1.

FIG. 3 is a cross-sectional view taken along line 2—2 of the kiln cylinder in FIG. 1 rotated about 90°.

FIG. 4 is a cross-sectional view of the fuel charging apparatus taken along the line 4-3 in FIG. 3.

FIG. 5 is similar to FIG. 3 illustrating an alternate embodiment of the charging apparatus.

FIG. 6 is a partial cross-sectional view of the apparatus shown in FIG. 5 with the kiln cylinder rotated about 30°.

FIG. 7 is a partial cross-sectional view of the upper end of a preheater/precalciner type kiln modified to carry out the inventive process.

DETAILED DESCRIPTION OF THE PREFERRED EMBODIMENT

This invention relates to a method for achieving environmentally sound disposal of combustible hazardous waste in an operating rotary kiln. Rotary kilns can be of the conventional type or of the so-called preheater or precalciner type. Common to each, however, is a heated, rotating cylinder containing in-process mineral material. In the widely used commercial process for the production of cement clinker, cement raw materials are calcined and "clinkered" by passing finely divided raw materials through a rotating inclined rotary kiln or kiln cylinder. The requisite temperatures for processing the mineral material are achieved by burning fuel such as gas, fuel oil, powdered coal and the like in the gaseous atmosphere at the lower end of the kiln with the gases moving countercurrent to the solids through the rotating kiln cylinder. With the high temperatures required for the process, fuel costs constitute a significant factor in the ultimate cost of the product. Presently fuel costs are often reduced through burning of pumpable liquid hazardous wastes, alone or in combination with conventional fuels.

In what is known as long dry or wet process kilns the entire mineral heating process is conducted in the rotating kiln cylinder. The cylinder is typically 10 and 12 feet or more in diameter and 300-500 feet in length and is inclined so that as the cylinder is rotated, raw materials fed into the upper end of the kiln cylinder move toward the lower "fired" end where the final clinkering process takes place and the product clinker is discharged for cooling and subsequent processing. Temperatures in the fired clinkering zone of the kiln range from about 1300° C. to about 1600° C. Gas temperature in the kiln decreases to as low as about 150°-200° C. at the upper mineral material receiving end of so-called wet process kilns. Somewhat higher gas temperatures exist in the upper end of dry process kilns.

Preheater or precalciner kilns have, in addition to the inclined rotating kiln cylinder fired at the lower dis

charge end, an apparatus for preheating or precalcining the mineral material before it is charged into the upper end of the rotating kiln cylinder. The kiln is typically much shorter than kiln cylinders in conventional long dry and wet process kilns. The gas temperatures inside the rotating kiln cylinder of a precalciner type kiln ranges from about 1300° to about 1600° C. at the fired discharge end to about 950°-1200° C. at its uppermost end.

In the present method, combustible hazardous waste, preferably combustible hazardous waste solids, are containerized and charged into the kiln to contact the mineral material at a point along the length of the kiln cylinder where the kiln gas temperatures ranges from about 950° C. to about 1200° C. In a conventional long dry and wet process rotary kiln, that range of gas temperatures is typically found in the kiln cylinder in a zone that corresponds approximately to the middle axial one-third portion of the kiln cylinder. In a preheater or precalciner type rotary kiln, the specified gas temperature ranges exist in about the upper one-third portion of the rotary kiln cylinder.

Hazardous wastes which can be charged to a kiln for disposal in accordance with this invention typically have volatile components, which are volatilized from the waste material as it contacts the hot mineral material, and non-volatile components comprising both combustible high molecular weight organic materials and non-combustible inorganic materials. It is critical to the environmental integrity of the present process that the volatile components entering the kiln gases are destroyed or complete combusted before being discharged from the kiln. Complete combustion of the volatile components is a function of gas temperature, residence time, and oxygen content. Thus, incomplete combustion evidenced by high hydrocarbon emissions or high carbon monoxide levels in the waste gas stream, could mean that the gas temperature at the point of complete combustion is too low, that there was insufficient oxygen to complete combustion either because of low kiln gas oxygen or because of unusually high volatile concentration, or insufficient residence time. It has been found that under normal kiln operating conditions where the hazardous waste is containerized and charged into the kiln where kiln gas temperatures are in a range from about 950° to about 1200° C., the process can be conducted consistently and continuously with a DRE of POHC's at 99.99% and higher.

Hazardous waste destruction efficiency of the process can be monitored as a function of carbon monoxide and/or total hydrocarbons in the effluent gas stream. Each kiln modified to carry out the present process can be calibrated, for example during a test burn of containerized solid hazardous waste, so that carbon monoxide concentration in exhaust gases can be utilized as a direct indication of the DRE of the ongoing process. Thus, for example, carbon monoxide concentration ranging from about 100-2000 parts per million can be determined to correspond to a defined range of hydrocarbon emissions. Continuous monitoring of effluent gases assures full compliance with applicable environmental regulations and consistent product quality.

"Environmentally sound disposal" as used in the description of the invention means disposal of the hazardous waste with a destruction and removal efficiency of principal organic hazardous constituents of at least 99.99% and correspondingly minimal emissions of other possible environmental contaminants. The hazardous waste materials that can be processed in accordance with this invention can be derived from a wide variety of industrial sources and can assume an equally wide range of forms and chemical compositions. They can be in the form of hard solids, sludges, viscous tar-like residues, and often consist of high molecular weight organic resins. The term "hazardous waste" is intended to refer to those waste products designated as hazardous under applicable environmental regulations, particularly those that are so categorized because of their inherent toxicity and/or flammability or their content of toxic and/or flammable materials. While the process is particularly adapted to destruction of combustible hazardous waste solids, volatile constituents of typical solids are readily tolerated and safely and effectively complete combusted in the process.

It is contemplated that this process finds application, too, for thermal treatment of soils contaminated with toxic and/or combustible hazardous compounds.

The hazardous waste materials are containerized for safe shipment and handling and for complete combustion control of volatile constituents in the process. Further, to facilitate control of kiln operating conditions, it is preferred that hazardous waste materials for use in the process be collected, optionally categorized so that hard solids can be comminuted and blended with other hazardous waste materials to form a hazardous waste homogenate. Individual lots of hazardous waste homogenates can also be categorized in terms of ash content, volatiles, halogen content and energy value per unit weight. Portions of the waste homogenate are then packaged into sealed containers adapted to be charged into a rotary kiln in accordance with the present disposal process utilizing, for example, the charging apparatus illustrated in FIGS. 1-4. Each container is filled to contain an amount of hazardous waste or hazardous waste homogenate so that each container has an energy value within a predetermined energy value range and then sealed. Thus, a specific example was a 1000-container lot of "fuel modules" for use in this invention that had an energy value (heat of combustion), including that of the container itself, of 300,000 to 500,000 BTU. The resulting container-to-container consistency in combustion properties and energy values facilitated process control for production of a mineral product within specifications and promoted the maintenance of kiln operating conditions appropriate for environmentally sound disposal of the hazardous waste materials charged into the process.

One form of hazardous waste which has been successfully utilized in this process is a by-product of the production of liquid waste fuels already marketed by Cadence Chemical Resources under the name CHEM FUEL® for burning in kiln operations. The solid hazardous waste by-product consist of the non-volatile and non-extractable residues which consist principally of high molecular weight resins, polymers and residual volatiles. Preferably the hazardous waste containerized for use in the present process should have a BTU value of greater than 5,000 BTU/lb. Free liquids in the solid waste materials should be minimized. If present, they may be absorbed using an organic absorbent material such as ground corncobs or similar BTU contributing material.

Sealable containers for the hazardous waste should be fully compliant with applicable Department of Transportation standards for containment/shipment of hazardous waste materials. Sealable steel pails or drums are

NOTICE
If the filmed image is less clear than this Notice it is due to the quality of the document being filmed.

CD2F 003

0 0 3 2

preferred. The container contributes both energy (iron is oxidized in the higher temperature zones near the discharge end of the kiln) and material (iron oxides) to the process chemistry. Other containers such as fiber and plastic may also be used. The size of the containers are dependent on the energy value of the hazardous waste targeted for disposal and the capacity of the kiln to receive such containers.

In a representative embodiment of the invention a homogenate of hazardous waste solids having a minimum energy value (heat of combustion) of 6,000 BTU/lb, a chlorine content of less than 6.66% and PCB's at less than 50 ppm is packaged in six-gallon steel pails conforming to DOT Specification 17H or 17A. The pails are open head containers with sealable lug-type covers. The pails are 26 gauge steel bodies and lids for net contents of less than 60 lbs. and 24 gauge steel bodies and lids where the net weight of the contents is greater than 60 lbs. and less than 80 lbs. The combustible waste material is filled into the pails which are then sealed and the gross weight of each pail is marked on the lid. Each pail is then marked with the necessary labels and markings to conform with DOT, state and other regulations. It is desirable that the homogeneity of the hazardous waste material be such that there not be more than 3,000 BTU/lb difference between containers in any given lot of containers.

Performance of the present method for achieving environmentally sound disposal of combustible hazardous waste in conventional long dry and wet process kilns is achieved by a novel charging apparatus comprising a port in the wall of the kiln cylinder, a drop tube extending from the port into the kiln cylinder and positioned so that the mineral material in the kiln will not pass through the port or contact the port closure during rotation of the kiln cylinder, means for receiving the fuel and positioning same for passage through the port, and means for applying a force to said containerized fuel sufficient to move the fuel from the receiving and positioning means through the port and drop tube and into the kiln cylinder. Preferably a closure is provided for the port along with means for actuating the closure to open and close the port at predetermined times during rotation of the kiln cylinder.

FIG. 1 illustrates a conventional long dry and/or wet process kiln 10 having kiln cylinder 12 with lower fired end 14 where processed mineral material 16 is discharged from cylinder 12. Mineral material is charged to the upper end 20 of kiln cylinder 12 and moves down kiln cylinder 12 as it is rotated about its axis at a rate of about 1 to about 3 times per minute. Exhaust gases from kiln 10 may be treated to remove particulates at emission control station 22 utilizing bag filters or electrostatic precipitators (not shown). The flow of gases through kiln cylinder 12 is controlled by blowers 24 which direct the exhaust gases through stack 26. A solid fuel charging apparatus 28 is located at approximately the mid-point of kiln cylinder 12.

Fuel modules 30 are located on elevated platform 32 from which they are loaded into charging apparatus 28 as the kiln cylinder 12 rotates. A thermocouple 33 is located about 10 to about 50 feet downstream (uphill) from charging apparatus 28 to monitor gas temperature in kiln cylinder 12.

Referring to FIG. 2, charging apparatus 28 consists of drop tube 34 extending into the kiln cylinder a distance greater than the maximum depth of mineral bed 36. Drop tube 34 communicates with port 38 in wall 40 of kiln cylinder 12. Port 38 also communicates with fuel receiving chute 42. Fuel receiving chute 42 is designed so that when fuel module 30 is received in chute 42, fuel module 30 is positioned in alignment with port 38.

With reference to FIGS. 2 and 3, closure 44 is provided for port 38. Pivoted lever 46 is provided for actuating closure 44 between a port-opened position (FIG. 3) and a port-closed position (FIG. 2). Closure 44 is biased in the closed position by spring 48 cooperating with lever 46. Lever 46 is positioned so that as kiln cylinder 12 rotates to a point where port 38 is near its highest position during rotation of kiln cylinder 12, lever 46 contacts fixed cam 50 through a predetermined arc of rotation of kiln cylinder 12 to move lever 46 from the biased port-closed position to the port-opened position so that fuel module 30 falls with force of gravity from receiving chute 42 through port 38 and drop tube 34 and onto mineral bed 36. As the kiln cylinder 12 is rotated past eh position where the fuel module 30 is transferred into the kiln cylinder, lever 46 moves past cam 50 and the closure returns to its biased port-closed position. Cam 50 is positioned on cam mount 52 which can be moved from an apparatus-operating position (shown in FIG. 5) to a position where cam 50 does not contact lever 46 during rotation of kiln cylinder 12.

Closure 44 is positioned relative to port 38 and sized so that when it is in the port-closed position, clearance is allowed for air flow into kiln cylinder 12 under the influence of negative pressure in kiln cylinder 12 effected by blowers 24. Air flow through port 28 around closure 44 and into kiln cylinder 12 through drop tube 34 helps to cool closure 44 and drop tube 34. Air temperature in kiln cylinder 12 in the vicinity of drop tube 34 ranges from about 950° C. to about 1200° C. Drop tube 34 must be constructed of a material which can withstand those thermally harsh conditions over long periods of time. It is preferably constructed of an alloy protected by refractory 35. One alloy found suitable for construction of the drop tube 34 is an alloy sold by Duralloy Blaw-Knox under the trademark SUPER 22-H.® That alloy is a patented high strength alloy designed for service to 2250° F. (1230° C.). Its stated chemical composition is as follows: nickel, 46–50%; carbon, 0.40–0.60%; chromium, 26.0–30.0%; manganese, 1.50% max.; silicon, 1.75% max.; tungsten, 4.00–6.00%; molybdenum 0.50% max.; cobalt, 2.50–4.00%; sulfur, 0.04% max.; and phosphorus 0.04% max.

Sensor 54 is positioned to detect transfer of fuel module 30 through port 38 and into kiln cylinder 12. An audible or visible signal is generated to indicate that the transfer is complete.

In operation, fuel module 30 is loaded from elevated platform 32 into kiln cylinder mounted fuel receiving chute 42 as it passes elevated platform 32. As kiln cylinder 12 is rotated and fuel receiving chute 42 approaches a near vertical position, fixed cam 50 contacts pivoted lever 46 moving closure to the port-opened position allowing fuel module 30 to drop through port 38 and drop tube 34 and onto mineral bed 36. As kiln cylinder continues its rotation and pivoted lever 46 moves past fixed cam 50, the closure is returned to the port-closed position by action of spring 48 on pivoted lever 46.

With reference to FIG. 5 there is illustrated a second embodiment of a fuel module charging configuration. Drop tube 134 communicates with port 138 and extends radially inwardly into the kiln cylinder. Fuel receiving chute 142 is stationary and mounted immediately above

NOTICE
If the filmed image is less clear than this Notice it is due to the quality of the document being filmed.
CD2F 003
0 8 3 3

the rotating kiln cylinder. Stationary fuel receiving chute 142 is positioned so that it comes into alignment with port 138 and drop tube 134 once on each revolution of kiln cylinder 112. A fuel module retaining rail 60 is mounted circumferentially on the exterior of kiln cylinder 112 at an axial position in alignment with both port 138 and stationary fuel receiving chute 142 and having rail terminii 62, 64 at opposite edges of port 138 so that when fuel module 30 is positioned in receiving chute 142 it rides on retaining rail 60 until rail terminus 62 of retaining rail 60 clears fuel module 30 at a point where receiving chute 142, port 138 and drop tube 134 are in alignment, and fuel module 30 falls under the force of gravity through port 138 and drop tube 134 onto the mineral bed as is shown in FIG. 6. Fuel module retaining rail 60 and port 138 are enclosed in fixed annular housing 145 which helps to control air infiltration into kiln cylinder 112 through port 138. As kiln cylinder 112 rotates and rail terminus 64 clears the fuel receiving chute 142, the next fuel module can be transferred to receiving chute 142.

With reference to FIG. 7, fuel modules 30 can be delivered directly into the mineral bed 236 in the upper end 220 of rotary kiln cylinder 212. In normal operation, mineral material is preheated by the heat contained in the exhaust gases. In precalciner operations, fuel is added to the riser duct 266 and combusts either with excess air in the kiln gas or additional air provided through a separate duct 269. The energy released by this combustion is absorbed by the mineral material before entering the kiln. This preheated mineral material travels down a duct parallel to the fuel module delivery tube 270 and then down ramp 268 and into upper end 220 of inclined rotating kiln cylinder 212 where thermal processing of the mineral material is completed as it moves down rotating kiln cylinder 212. A fuel module delivery tube 270 is installed at the upper end of ramp 268 at the base of preheater/precalciner riser duct 266. Delivery tube 270 has a ceramic lined portion 272 proximal to the base of the riser duct 266 and is equipped with master gate valve 274 and upper and lower gate valves 276 and 278, respectively, operated during the fuel module loading procedure. The delivery tube is configured so that a fuel module entering the base of riser duct 266 through delivery tube 270 has sufficient momentum to carry it quickly down ramp 268 and onto the mineral bed 236 in upper end 220 of rotary kiln cylinder 212. Fuel modules are charged into the kiln through delivery tube 270 at predetermined intervals ranging from about 30 seconds to about 2 minutes usually one every 60 seconds.

In operation, a fuel module is delivered to the kiln by the following procedure. With lower gate valve 278 closed, upper gate valve 276 is opened and fuel module 30 is loaded into upper end 280 of delivery tube 270. Upper gate valve 276 is closed and at the predetermined time, lower gate valve 278 is opened to allow fuel module 30 to fall down delivery tube 270 across ramp 268 and onto mineral bed 236.

It is contemplated that waste fuel modules could also be delivered into the upper portion of the kiln cylinder of a precalciner type kiln utilizing, for example, the charging apparatus illustrated in FIGS. 2-4. The apparatus can be positioned at a point, along the upper one-third portion of the rotary kiln cylinder where the kiln gas temperatures range from about 950° to about 1200° C., more preferably between about 950° C. and 1100° C.

Measurements of destruction and removal efficiency and particulate emissions has already been conducted on a precalciner rotary kiln having a construction substantially as illustrated in FIG. 7. A test burn was conducted in which 10% of the process energy came from solid hazardous waste derived fuel introduced in steel containers onto the mineral bed in the upper end of the rotary kiln cylinder. The tests were conducted with a specially prepared surrogate waste derived fuel spiked with chlorinated hydrocarbons. The containerized fuel was fed into the process at a rate of 3900 lbs/hr. The destruction and removal efficiency was found to be well in excess of 99.99% in all tests.

Comparable results were obtained in a conventional long dry and wet process rotary kiln (12' × 450') fired at the rate of 150-250 million BTU's per hour of coal, gas or liquid hazardous waste derived fuel. During a test burn a specially prepared surrogate waste derived fuel enriched in paint pigments, to give maximum heavy metal input, and spiked with at least 5% trichlorobenzene was used. The principal component of the solid waste was high molecular weight non-volatile polymers and resins obtained as a by-product of the production of liquid hazardous waste derived fuel. The waste blend was packaged in 24 gauge steel pails with sealable lug-type covers and were introduced to the mid-point of the rotary kiln cylinder, at a rate of one (1) container per minute. At 5% trichlorobenzene, the POHC input was about 3.25 lbs/minute. During the test burn, the concentrations of carbon monoxide, nitrogen oxide, oxygen and sulfur dioxide in the exit gases were monitored as well as mineral material feed rate, fuel rate, kiln speed, and gas temperatures at various points along the length of the kiln cylinder. Throughout the test run, the gas temperature was monitored by a thermocouple 12 feet downstream (uphill) of the point of introduction of the waste fuel modules. This temperature was maintained above 925° C. at all times. Preliminary data collected during the test burn predicts a DRE providing a high margin of safety for environmentally sound destruction of solid hazardous waste.

What is claimed is:

1. A method for achieving environmentally sound disposal of hazardous waste in an operating rotary kiln comprising a heated, rotating cylinder containing in-process mineral material, said method comprising the steps of packaging said hazardous waste in containers and charging the containerized hazardous waste into the kiln to contact the mineral material at a point along the length of the kiln cylinder where the kiln gas temperature ranges from about 950° C. to about 1200° C.

2. The method of claim 1 wherein the rotary kiln is a conventional long dry or wet process rotary cement kiln fired at its discharge end and the containerized hazardous waste is charged into the kiln cylinder at a point along the middle axial one-third portion of the kiln cylinder.

3. The method of claim 2 wherein the containerized hazardous waste is charged through a port in the kiln cylinder wall.

4. The method of claim 1 wherein the operating rotary kiln is a preheater or precalciner type rotary kiln having a preheater portion upstream from a rotating kiln cylinder having an upper end for receiving preheated mineral material from the preheater portion and a fired lower end where mineral material is discharged from the kiln, and wherein the containerized hazardous

NOTICE
If the filmed image is less clear than this Notice it is due to the quality of the document being filmed.

CD2F 003

0 0 3 4

waste is charged directly into the upper end of the kiln cylinder.

5. The method of claim 4 wherein the containerized hazardous waste is charged through a port in the kiln cylinder wall.

6. The method of claim 1 further comprising the step of blending the hazardous wastes to form a hazardous waste homogenate for packaging in said containers.

7. The method of claim 1 wherein the packaging of the hazardous waste is carried out so that each container of hazardous waste has an energy value content within a predetermined energy value range.

8. The method of claim 7 wherein the hazardous waste is sealed in metal containers.

9. The method of claim 8 further comprising the step of blending the hazardous wastes to form a hazardous waste homogenate for packaging in said containers.

10. The method of claim 9 wherein the kiln gas temperature at the point of charging ranges from about 950° C. to about 1100° C.

11. The method of claim 9 wherein the containerized waste is charged through a port in the kiln cylinder wall.

12. The method of claim 1 wherein the containerized hazardous waste is charged into the kiln at a point where the kiln gas temperature ranges from about 950° C. to about 1100° C.

13. The method of claim 12 wherein the containerized hazardous waste is charged through a port in the kiln cylinder wall.

14. The method of claim 13 further comprising the step of blending the hazardous wastes to form a hazardous waste homogenate for packaging in said containers.

15. An improved method for recovery of energy values from hazardous wastes in an operating rotary kiln comprising a heated, rotating cylinder containing mineral material, said method comprising the steps of packaging said hazardous waste in sealable containers and charging the containerized hazardous waste into the kiln to contact the mineral material at a point along the length of the kiln cylinder where the kiln gas temperature ranges from about 950° C. to about 1200° C.

16. The method of claim 15 wherein the rotary kiln is a conventional long dry or wet process rotary cement kiln fired at its discharge end and the containerized hazardous waste is charged into the kiln cylinder at a point along the middle axial one-third portion of the kiln cylinder.

17. The method of claim 16 wherein the containerized hazardous waste is charged through a port in the kiln cylinder wall.

18. The method of claim 15 wherein the operating rotary kiln is a preheater or precalciner type rotary kiln having a preheater portion upstream from a rotating kiln cylinder having an upper end for receiving preheated mineral material from the preheater portion and a fired lower end where mineral material is discharged from the kiln, and wherein the containerized hazardous waste is charged directly into the upper end of the kiln cylinder.

19. The method of claim 15 further comprising the step of blending the hazardous wastes to form a hazardous waste homogenate for packaging in said containers.

20. The method of claim 15 wherein the packaging of the hazardous waste is carried out so that each container of hazardous waste has an energy value content within a predetermined energy value range.

* * * * *

NOTICE
If the filmed image is less clear than this Notice it is due to the quality of the document being filmed.

CD2F 003

0 8 3 5

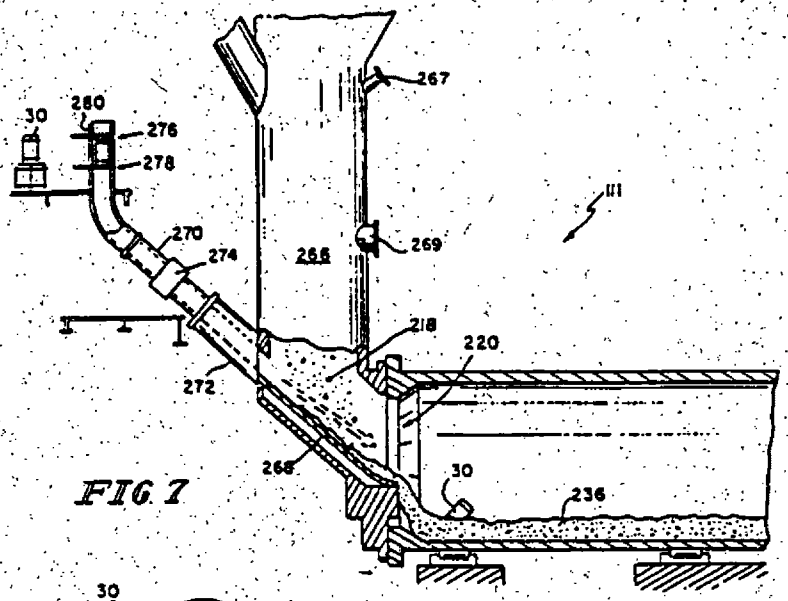

FIG. 7

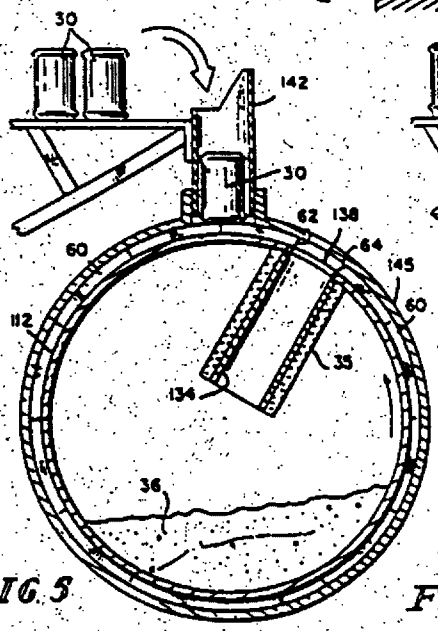

FIG. 5

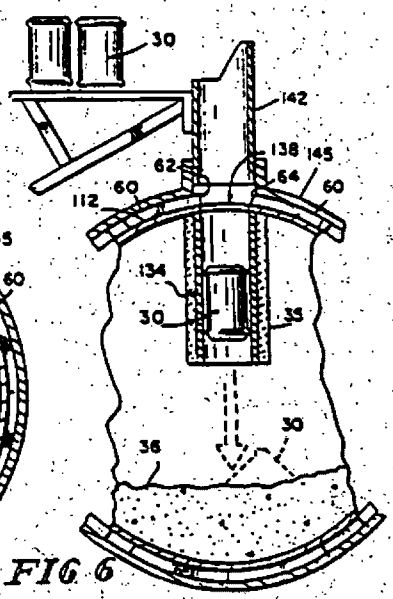

FIG. 6

NOTICE
If the filmed image is less clear than this Notice it is due to the quality of the document being filmed.

CD2F 003

0836

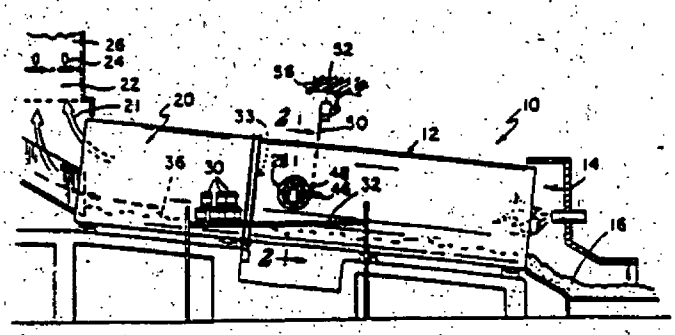

FIG. 1

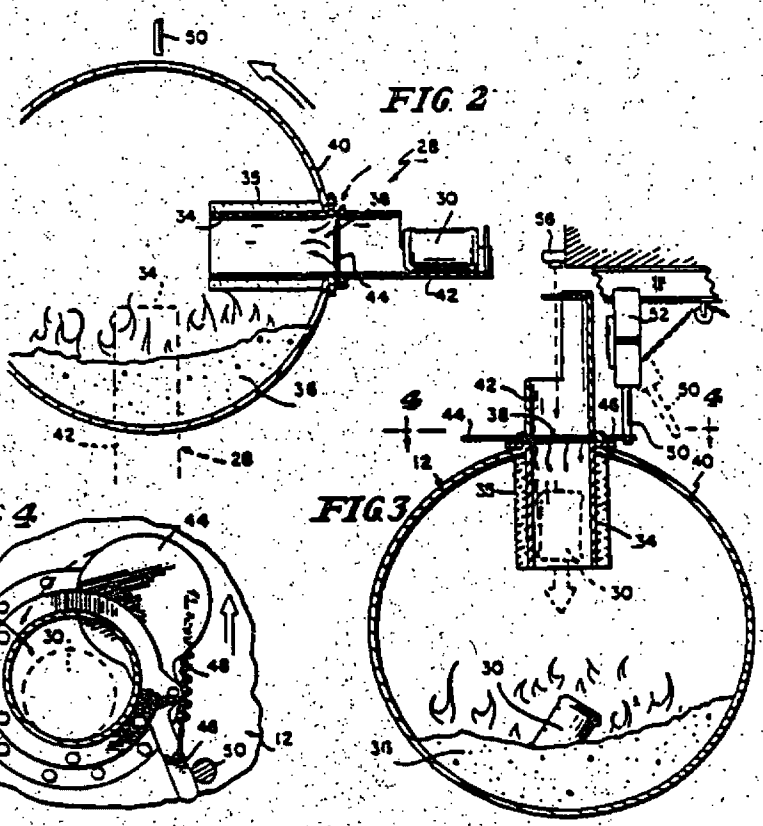

FIG. 2

FIG3

NOTICE
If the filmed image is less clear than this Notice it is due to the quality of the document being filmed.

CD2F 003

0 8 3 7

Contact: Reginald Miller, Technical Representative (313) 778-9089
Charles Binkey, Environmental Compliance Manager (313) 824-5418

Processor: PetroChem Processing Inc.

Phone: see contacts

Location: Detroit, Michigan

Date: 27 February, 1992, 28 February 1992

ICF Contact: Prakash Ramaswamy

Report of Discussion:

PetroChem Processing Inc. is a T/S/D facility that accepts wastes in containers and bulk liquid tankers. The facility only accepts wastes that have heat content values greater than 5,000 BTU/lb. PetroChem repackages sludges and solids into 6-gallon burnable containers for shipment to cement kilns.

Current status of facility to accept K048-K052, F037, and F038 wastes:

- The facility is permitted to accept K048-K052, F037, and F038 wastes

Volumes of K-listed petroleum refining wastes currently being accepted and processed by facility:

- Mr. Binkey indicated that PetroChem regularly accepts K048-K052 wastes. The facility receives the K-listed petroleum refining wastes in containerized form. Mr. Binkey could not estimate volumes of K-listed wastes accepted and processed in 1991.

- PetroChem operates one mobile process unit. The K048-K052 wastes are slurried on site and shipped to Ash Grove in a bulk tanker (one 5,000 gallon tanker/day). Mr. Binkey could not estimate how much of the K-listed waste is blended for each tanker or the down time for the unit.

Current processing and storage capacity of facility (for all wastes):

- Mr. Binkey provided current maximum processing capacity and utilized capacity estimates. Maximum practical capacity is 70,000 gallons/day. Currently utilization is 50,000 gallons/day. Available capacity is 20,000 gallons/day. Mr. Binkey could not categorize these volumes by physical types of waste.

NOTICE
If the filmed image is less clear than this Notice it is due to the quality of the document being filmed.

CD2F 003

0 8 3 8

- Mr. Binkey stated that 792 six-gallon pails are shipped to cement kilns on a daily basis.

Physical forms of wastes accepted by facility:

- The facility accepts liquids, non-pumpable sludges, pumpable sludges, and solids. All forms of waste except liquids must be containerized.

Heat content restrictions imposed on wastes accepted by facility:

- Because of permit requirements, the facility can only accept materials that have heat contents greater than 5,000 BTU/lb. The facility is considering to lower the minimum to 2,500 BTU/lb when the cement kilns certify compliance with the BIF Rule.

BIF Rule impact on the facility:

- Mr. Binkey indicated that permit can be modified within a brief period of time after kilns complete compliance certification.

Cement Kilns utilized:

- Ash Grove (Chanute, Foreman, Louisville),
- Dixie Cement (Knoxville, Tenn)

Incinerators utilized: N/A

Waste packaging for cement kilns:

- Waste is repacked into 6-gallon containers. Mr. Binkey could not provide process mechanisms of repackaging unit.

NOTICE
If the filmed image is less clear than this Notice it is due to the quality of the document being filmed.

CD2F 003

0 0 3 9

Contact: Bill Clarke, Facility Sales Manager

Processor: GSX/Laidlaw

Location: Crowley, Louisiana

Phone: (318) 783-3624

Date: 2 March 1992

ICF Contact: Prakash Ramaswamy

Report of Discussion:

GSX/Laidlaw is a T/S/D facility that accepts wastes in containers, cubic yard bags, bulk tankers, and roll-off bins. The facility repackages the wastes for shipment to either commercial hazardous waste incinerators or cement kilns. The facility repackages sludges and solids that have heat content values greater than 5,000 BTU/lb into 6-gallon burnable containers for shipment to cement kilns owned by Ash Grove or resuspends sludges and solids with heat content value greater than 5,000 BTU/lb into a liquid slurry for bulk shipment to River Cement. Wastes not meeting the minimum heat content requirements of cement kilns are repackaged or shipped directly to hazardous waste incinerators. GSX/Laidlaw also provides off-site processing services for clients. Telephone discussions with GSX representatives focused on K-listed petroleum wastes processed at the Crowley, Louisiana facility and processing capacities of off-site treatment units owned and operated by GSX.

Current status of facility to accept K-listed (K048-K052) and F-listed (F037,F038) petroleum refining wastes:

- The facility is permitted to accept K048-K052, F037, and F038 wastes.

Rejection rate of petroleum refining wastes at facility:

- Mr. Clarke indicated that wastes shipped to facility are pretreated on-site at refiners, therefore the rejection rate is 0%.

Volumes of K-listed petroleum refining wastes being accepted and processed:

- Mr. Clarke indicated that the facility regularly accepts K048-K052 wastes. He estimated that the facility accepts between 375 and 500 tons of K-listed petroleum refining wastes per month. He indicated that the 98% of K-listed petroleum refining wastes are shipped in roll-off bins to the facility.

NOTICE
If the filmed image is less clear than this Notice it is due to the quality of the document being filmed.

CD2F 003

0 0 4 0

- Mr. Clarke indicated that less than 2% of K-listed wastes are shipped in containers to the facility. He stated that there are no technical restraints for having petroleum refining sludges shipped in containers as long as the waste meets minimum heat content requirements.

Current storage and processing capacities of facility (for all wastes):

- For containerized wastes, Mr. Clarke estimates that the facility is capable of accepting 10,000 55-gallon drums per month and is currently receiving 6,000 drums per month.

- For bulk solids, Mr. Clarke estimated that the facility is capable of accepting sixty roll-off bins/month and is currently receiving forty roll-off bins/month.

Physical forms of wastes accepted by facility:

- The facility accepts liquids, nonpumpable sludges, pumpable sludges, and solids. These physical forms of waste are accepted in bulk tankers, containers, cubic yard bags, and roll-off bins. (Waste packing protocol must meet D.O.T specs)

Heat content restrictions imposed on wastes accepted by facility:

- Permit requires that the facility can only accept material that has a heat content greater than 5,000 BTU/lb.

BIF Rule impact on the facility:

- Mr. Clarke is uncertain on how the state is going to respond to BIF Rule. Mr. Clarke believes that fuel processors in Louisiana are not going to change minimum heat content requirements in the coming year.

Cement Kilns utilized:

- Ash Grove (Foreman)
- River Cement (Festus)

Incinerators utilized: N/A

Waste packaging for cement kilns:

- Waste is repacked into 6-gallon containers for shipment to Ash Grove. 40% of all waste is repackaged into 6-gallon containers.

NOTICE
If the filmed image is less clear than this Notice it is due to the quality of the document being filmed.

CD2F 003

0 8 4 1

- Solids are resuspended and shipped via bulk tanker to River Cement. Presently 60% of all waste is processed for bulk tanker shipment.

Other capacity related issues:

- One factor that affects facility capacity is the seasonal operation of cement kilns. Several of the cement kilns that GSX utilize are down for maintenance during Dec.,Jan.,and Feb. During this period, outgoing shipments are reduced by 50%.

- GSX/Laidlaw operates between 40 and 50 mobile plate and frame filter presses that provide on-site dewatering of K-listed petroleum refining sludges. Between 20 and 30 filter presses are in Texas and between 10 and 20 filter presses are in Louisiana. Plate and frame filter presses can reduce water content in sludge to 35-40%. Each filter press produces between 20 and 45 cubic yards of filtercakes per week. Throughput volumes of filter presses are based on filter presses operating eighty hours per week. GSX uses various types of organic filter media to enhance heat content in resulting filter cakes. Mr. Clarke indicated that dewatered sludges that meet the 5,000 BTU/lb requirement are transported to the Growley, Louisiana facility to be blended as fuel for cement kilns.

- GSX also uses thermal dryers in conjunction with plate and frame filter presses. Mr. Clarke stated that the filter press/thermal dryer system can reduce moisture content of sludge to less than 5%.

NOTICE
If the filmed image is less clear than this Notice it is due to the quality of the document being filmed.

CD2F 003

0 8 4 2

Contact: Ed Tobia

Processor: GSX/Laidlaw

Location: Houston, Texas

Phone: (713) 467-3433

Date: 2 March 1992

ICF Contact: Prakash Ramaswamy

Report of Discussion:

This phone discussion focused on GSX's off-site pretreatment operations of petroleum refining wastes in the Gulf Coast region.

Mr. Tobia stated that GSX currently operates four mobile thermal dryers units. Three are in California and one is in Texas. The thermal dryer unit in Texas is used for processing F037/F038 wastes. The refinery is using the thermal dryer/filter press combination in order to delist the waste for that particular facility. Mr. Tobia indicated that the maximum processing capacity for the units that GSX operates is 2 tons/hour. The dryers are designed to operate 24 hour/day. Mr. Tobia indicated that the practical maximum capacity of thermal dryers is 1.5 tons/hour based on a 40% sludge/60% water mixture. Mr. Tobia believes that the F037/F038 filtercakes being produced at this particular refinery have heat content values ranging between 1,500 to 2,000 BTU/lb. He noted that diatomacous earth, a material with no heat content value, is used as the filter aid. The resulting filtercake has the consistency of fly ash and a moisture content of 5%. Mr. Tabia believes that there is a shortage of thermal dryer units available for drying petroleum refining sludges. He indicated that there are several competitors, but most own one or two thermal dryers.

NOTICE
If the filmed image is less clear than this Notice it is due to the quality of the document being filmed.

CD2F 003

0 8 4 3

Contact: Steve Chandlin

Processor: GSX/Laidlaw

Location: Bakersfield, California

Phone: (805) 835-5801

Date: 2 March 1992

ICF Contact: Prakash Ramaswamy

Report of Discussion:

This phone discussion focused on GSX's off-site pretreatment operations of petroleum refining wastes in California.

Mr Chandlin indicated that GSX operates three thermal dryers in California

- Thermal dryer #1 is currently being used in conjunction with a plate and frame filter press to pretreat K048-K052 sludges at a local refinery. The system is processing 1.5 tons per hour. The system is in operation for 24 hours/day, 4 days per week. The sludge is filter pressed using a coke product filter aid and dryed at a temperature between 350-500 °F. Mr. Chandlin stated that 40 tons per week is currently being shipped to cement kilns. 90% of the filtercakes are transported in roll-off bins, 5% are shipped in cubic yard bags, and 5% are shipped in containers. Mr. Chandlin indicated that the filter press/thermal dryer unit can reduce moisture level to less than 10%.

- Thermal dryer #2 is currently waiting for reassignment.

- Thermal Dryer #3 is undergoing minor repair.

Mr. Chandlin indicated that there is a shortage of thermal dryers. He stated that there is no available capacity for the GSX thermal dryers operating in California. Mr. Chandlin estimates that there are twelve mobile thermal dryers currently operating nationwide.

Mr. Chandlin believes that the F037/F038 wastes will have a lower heat content value than that of the K048-K052 wastes, but that adding filter media with higher heat content and by adjusting retention time of the dryer should enhance heat content of the resulting F037/F038 filtercake.

NOTICE
If the filmed image is less clear than this Notice it is due to the quality of the document being filmed.

CD2F 003

0 8 4 4

Contact: Dave Parker, Project Manager
Albert Williams, Process Control Supervisor

Processor: OHM Group

Location: Marrow, Georgia

Phone: (404) 362-8902

Date: 9 March 1992, 10 March 1992

ICF Contact: Prakash Ramaswamy

Report of Discussion:

OHM Group is a T/S/D facility that accepts wastes in containers, bulk tankers, and roll-off bins. The facility repackages the wastes for shipment to either commercial hazardous waste incinerators or cement kilns. PetroChem repackages sludges and solids that have heat content values greater than 5,000 BTU/lb into 6-gallon burnable containers for shipment to cement kilns. Wastes not meeting the minimum heat content requirements of cement kilns are repackaged or shipped directly to hazardous waste incinerators.

Current status of facility to accept K048-K052, F037, and F038 wastes:

- The facility can accept K048-K052 wastes. The facility has applied for F037, F038 wastes and expects approval from the state within six months.

Volumes of K-listed wastes currently being accepted and processed by facility:

- Mr. Parker could not estimate the volumes of K-listed petroleum wastes accepted and processed in 1991. Mr. Parker could not indicate whether K048-K052 wastes were shipped to the facility in roll-off bins or in containerized form.

Current processing and storage capacity of facility (for all wastes):

- Mr. Parker stated that the maximum throughput (taking storage and processing factors into consideration) is two hundred 55-gallon drums per day. Mr. Parker indicated that 50% of that capacity is available. Mr. Williams indicated that between 75 and 100 55-gallon drums are processed daily. The maximum roll-off bin storage and processing capacity is two roll-off bins per week. Container storage is limited to 165,000 gallons at any given time.

Physical forms accepted by facility:

NOTICE
If the filmed image is less clear than this Notice it is due to the quality of the document being filmed.

CD2F 003

0 0 4 5

- The facility accepts liquids, containerized solids and bulk solids. The bulk solids must not contain free liquids.

Heat content restrictions at facility:

- Facility can only accept material that has a heat content greater than 5,000 BTU/lb if it is going to be blended into fuel. Material less than 5,000 BTU/lb is accepted, but it must be brokered to an incinerator. Mr. Williams indicated that between 60% and 70% of K048-K052 wastes are shipped to cement kilns and between 30% and 40% are shipped to commercial incinerators.

BIF Rule impact on the facility:

- Mr. Williams does not expect that the BIF Rule will not alter heat content restrictions

Cement kilns utilized:

- Ash Grove (Chanute, Foreman, Louisville)
- ESSROC (Indiana)
- Southdown (Knoxville, Tenn)

Incinerators utilized:

- Rollins
- Ensco

Waste packaging for cement kilns:

- Waste is removed manually or via Bobcat from roll-off bins. The material is then packed into 55 gallon drums. The 55 gallon drums are processed through an automated system which repacks material into 6-gallon pails.

NOTICE
If the filmed image is less clear than this Notice it is due to the quality of the document being filmed.

CD2F 003

0 8 4 6

Contact: Tony Lavinwood

Company: Allworth

Phone: (615) 379-3215

Date: 10 March, 1992

Caller: Lisette Lambregts

Subject: Packaging capacity

Report of Discussion:

Their hazardous waste fuel packaging capacity is 18,533 tons per year, and they are currently operating at just over half of this.

They have submitted a permit modification to be able to handle K048-52 and F037/38, and expect it to be approved this week or next.

NOTICE
If the filmed image is less clear than this Notice it is due to the quality of the document being filmed.

CD2F 003

0 8 4 7

NOTICE
If the filmed image is less clear than this Notice it is due to the quality of the document being filmed.

CD2F003

0 8 4 8

Contact: Tom Scott

Company: Cadence

Date: 10 March, 1992

Callers: Gary Light, James Hsu, Prakash Ramaswamy, Lisette Lambregts

Subject: Packaging capacity

Report of Discussion:

Cadence operates two types of mobile packaging equipment: pailers and baggers. Pailers fill six-gallon pails, and ideally take material that is slightly sticky. Baggers fill 10.5 gallon bags, and ideally take material that is well-dried. F037 and F038 wastes would go straight from a filter press to a pailer, but would need to be thermally dried before going to a bagger. Mr. Scott indicated that industry is moving toward increased drying, to minimize the amount of water that must be transported to treatment facilities. The cost of containers is a consideration also; each bag costs less than $1 and pails cost about $2. Baggers are designed to fill five 10.5-gallon bags per minute, and have been tested as high as 7.5 bags per minute. Mr. Scott estimates that baggers normally average three bags per minute. Generally, the baggers are less complicated than the pailers, and therefore require less maintenance and are operational a greater percentage of the time. Mr. Scott estimates that baggers are operational 90 percent of the time, pailers 80 percent.

Cadence operates one bagger and one pailer at Ash Grove's Kansas facility. The pailer has an operational limit of about 14,000 tons per year. Cadence also operates a bagger at a remediation site in Calcasieu, Louisiana, one idle in a warehouse in Kansas, and one leased to a processor in Texas. The pailer at Ash Grove, Kansas is receiving K048-52. From January to April 1991 it receive 1,500 tons. The machine currently operates one or two shifts per day, but could operate three if there was sufficient demand. They have not run into storage problems, but the ideal system would be for wastes to be packaged on site at refineries. Mr. Scott indicated they are 90 percent certain of one contract to lease mobile packaging machine to a refinery, 75 percent certain of another, and less than 50 percent certain of two others. After moving, baggers can be set up in one-two days, pailers in two-four. They have not had trouble with permitting these units, as officials have regarded them as packaging, not processing. However, refineries that operate dryers generally require processing permits. Currently Mr. Scott is not aware of any dewatering contractors that have packaging equipment. Many refineries are adding dryers.

Packaging capacity is a bottleneck for utilizing containerized solids capacity in cement kilns, but they have not run into real problems except for a few months in the winter.

Mr. Scott believes that if all the water is eliminated from F037 and F038, most would

have a heating value greater than 5,000 BTU/lb. It is difficult to filter all water out without using organic filter aids. Mr. Scott does not believe that the use of organic filter aids constitutes "blending up" due to the intrinsic value of the aids themselves (from 6,000 to 9,000 BTU/lb with some as high as 12,000 or 13,000 BTU/lb), but rather, that diatomaceous earth acts as a diluent. Organic filter aids merely avoid masking the inherent heating value of the wastes.

NOTICE
If the filmed image is less clear than this Notice it is due to the quality of the document being filmed.

CD2F 003

0 0 4 9

NOTICE
If the filmed image is less clear than this Notice it is due to the quality of the document being filmed.

LATE INFORMATION

CD2F 003

0 8 5 0

JUN 30 1992

NOTICE
If the filmed image is less clear than this Notice it is due to the quality of the document being filmed.

CD2F 003

0 8 5 1

NOTE

SUBJECT: Meeting with CKRC Re HC Controls Under the BIF Rule

FROM: Bob Holloway, Chief
Combustion Section

TO: BIF Docket

On May 1, 1992, representatives of the Cement Kiln Recycling Coalition (CKRC) met with OSW representatives to discuss CKRC's concerns with complying with the HC provisions of the BIF rule. See attached list of attendees.

CKRC expressed their concern that kilns feeding raw materials with high organic content and that subsequently have high HC levels (greater than about 40 ppmv and up to 250 ppmv) may not be able to comply with the alternative HC provisions of the BIF rule even if the rule is amended to allow a 10 ppmv HC variability factor. (Based on previous discussions with CKRC and reevaluation by the Agency, the Agency plans to issue a technical amendment to the BIF rule to redefine the baseline HC level that cannot be exceeded when burning hazardous waste as the HC level that is achieved when the kiln is not burning hazardous waste and is operated under conditions to minimize HC emissions plus 10 ppmv.)

CKRC asserts that the baseline HC level (i.e., when not burning hazardous waste) varies substantially over time (i.e., week to week or month to month, not hour to hour) for kilns with relatively high HC levels from raw material (i.e., greater than about 40 ppmv). CKRC indicated that they did not fully understand the factors that caused the baseline HC level to vary, but it appeared to be a function of variability of organic content of the raw material and variability of the amount of the organic compounds desorbed from the raw material that are actually combusted rather than emitted as HC. The fraction of organics that are combusted rather than emitted as HC will vary as the temperature profile in the kiln changes. In turn, there can be a number of operating factors that affect changes in the temperature profile.

Given that the baseline for kilns with high HC levels can vary substantially over time and that the industry does not fully understand the factors that cause the variability, the industry is concerned that some facilities may not be able to comply with the alternative HC provisions of the BIF rule. Accordingly, CKRC asked if there was some way affected facilities could have additional time to try to manage the problem. We indicated that the rule would be implemented on the schedule promulgated -- cement facilities have until 8/21/92 to submit Part B applications, request a case-by-case time extension for compliance with the HC controls, and receive approval for the time extension in an agreement that includes a HC limit based on

the baseline level adjusted by the variability factor of 10 ppmv (if the Agency so amends the rule, as planned).

NOTICE
If the filmed image is less clear than this Notice it is due to the quality of the document being filmed.

CD2F 003

0 0 5 2

Attendees:

CKRC

Eric Hansen, Ashgrove Cement
Bob Schriber, Lafser & Schreiber
Mike Benoit, Cadence Chemical
Dick Stoll, Freedman, Levy, Kroll & Simonds

VMD

Bob Holloway, Combustion Section
Shiva Garg, Combustion Section
Lori Stoll, Radian Corporation

NOTICE
If the filmed image is less clear than this Notice it is due to the quality of the document being filmed.

CD2F 003

0 8 5 3

UNITED STATES ENVIRONMENTAL PROTECTION AGENCY
WASHINGTON, D.C. 20460

OFFICE OF
SOLID WASTE AND EMERGENCY RESPONSE

NOTICE
If the filmed image is less clear than this Notice it is due to the quality of the document being filmed.

CD2F 003

0054

MEMORANDUM

SUBJECT: Cement Kiln Combustion Capacity for Hazardous Waste at Cadence Facilities and BIF Rule Impacts (CBI)

FROM: Les Otte, Chief
Analysis and Land Disposal Restriction Section

TO: Phase I LDR Regulatory Record

The purpose of this call on May 18, 1992, was to discuss several subjects including the impact of the Boiler and Industrial Furnace (BIF) rule compliance requirements on capacity for sludges and solids at cadence facilities. Mr. Benoit summarized his knowledge to date concerning Ash Grove's facilities capability to meet the BIF rule requirements as of August 1992 for the 20 ppm hydrocarbon emission limits certification. He reported that one of the Ash Grove facilities was having difficulty meeting the 20 ppm hydrocarbon limit. The Ash Grove Chanute, Kansas facility, routinely emits above the 20 ppm hydrocarbon limit when not utilizing hazardous waste derived fuel. The reason for the high and irregular hydrocarbon baseline was believed to be the result of natural organic materials within the feed materials. Both the source of the high levels of hydrocarbons and the irregular level of hydrocarbon emissions need to be understood and controlled in order for compliance. He also indicated that the other Ash Grove facilities were in various stages of developing, testing, and providing documentation to the Regional offices for compliance with the 20 ppm hydrocarbon emission limit.

Printed on Recycled Paper

Benigna Carroll 6/1/92

NOTICE
If the filmed image is less clear than this Notice it is due to the quality of the document being filmed.

CD2F 003

0 8 5 5

MEMORANDUM OF TELEPHONE DISCUSSION

DATE: May 19, 1992 TIME: 2-3 pm

PARTICIPANTS: HAZARDOUS WASTE TREATMENT COUNCIL

Richard Fortuna, Executive Director
David Case

EPA

Steven Silverman, Office of General Counsel
Benigna Carroll, Waste Management Division

PURPOSE: On May 13, 1992, Mrs. Carroll requested updated information from the Council on the continued management of and treatment capacity for soils contaminated with Third - Third wastes whose national capacity variance expired May 8, 1992. This discussion resulted from that request.

DISCUSSION: Mr. Silverman explained that EPA recently received some information that there are concerns about and some disruptions with the management of mercury, arsenic, and organic constituent contaminated soils which were under the national capacity variance that expired May 8, 1992.

Mr. Fortuna said he received about a half dozen of calls about treatment capacity for mercury, and arsenic (soils and non-soil wastes). However, he said he had no updated information on either concerns about or capacity for treating organic contaminants in soils.

Mrs. Carroll explained that EPA's methodology for capacity analysis requires information on available off-site commercial capacity whose treatment technologies currently are:

- -retorting for high concentrations of mercury,
- -vitrification for high concentrations of arsenic, and
- -primarily incineration (off-site commercial) for organic constituents.

Mr. Fortuna also noted that the situation with the treatment of contaminated debris differs from that of the treatment of contaminated soil. For debris, there are materials handling constraints and the treatment industry needs time to bring on line technologies whose standards are expected to be finalized at the end of June. For soils, current treatment technologies are applicable; however, treatment capacity may be limited.

AGREEMENTS: Mr. Fortuna agreed to provide us additional information on available capacity of Council members for treating these soils especially soils contaminated with organic constituents.

NOTICE
If the filmed image is less clear than this Notice it is due to the quality of the document being filmed.

Contact: Ann Elizabeth Lovett, Hazardous Waste Treatment Council (HWTC)

Date: June 2, 1992

Callers: Bengie Carroll, EPA and Gary Light, ICF Inc.

Subject: Clarification of HWTC's Capacity Information Submittal of June 1, 1992

Report of Discussion:

Purpose:

On June 1, 1992, the HWTC sent a facsimile to Bengie Carroll of EPA/OSW/CPB summarizing the results an internal survey of HWTC's member firms to determine available capacity for soil, Organic Toxicity Characteristic (OTC) wastes, and F037 and F038 petroleum refining wastes. This telephone call was intended to clarify this information.

Background on the HWTC Survey:

The HWTC was initiated in the fall of 1991. It initially focussed on contaminated soil. After several attempts by HWTC to encourage its members to respond, 14 companies provided information. This information varied considerably in detail. When HWTC realized that EPA was reevaluating capacity for F037 and F038, it compiled the information without additional follow-up and clarification that was intended.

Definition Of Available Capacity:

EPA sought clarification on whether the capacity information represented maximum capacity or whether the estimates represented available capacity net of current utilization. Ms. Lovett was uncertain of how the capacity terms were defined in the survey, but offered to send the actual form used to solicit the information. Ms. Lovett also pointed out that it was unclear how the capacity estimates accounted for existing contracts to receive F037 and F038.

Specificity of Capacity Types:

EPA sought clarification on whether the capacity information provided accounted for waste-specific constraints of F037 and F038 (e.g., heating value and physical form constraints). Ms. Lovett indicated that the capacity information was requested only at the technology and waste code level.

Firm or Facility Capacity Information:

EPA sought clarification regarding whether the capacity information provided was

CD2F 003

0 0 5 6

available at a facility-specific level or whether such information, which was noted as necessary for EPA's capacity analysis, was available. Ms. Lovett indicated that the information was provided to HWTC on a firm-wide basis and that she did not have authority to provide firm-specific information.

Commercial Status of Solvent Extraction Capacity:

EPA sought to clarify whether the reported solvent extraction capacity was from fixed-site commercial facilities or from on-site operations at petroleum refineries. Ms. Lovett was unable to clarify.

CPS Capacity:

EPA sought to clarify what was meant by container processing of solids. Ms. Lovett was unable to clarify.

Follow-up:

Ms. Lovett offered to talk to Richard Fortuna and/or Bill Ziegler to determine whether they would be able to clarify the information for EPA and whether HWTC would provide survey responses from specific firms.

NOTICE
If the filmed image is less clear than this Notice it is due to the quality of the document being filmed.

CD2F 003

0 0 5 7

NOTICE
If the filmed image is less clear than this Notice it is due to the quality of the document being filmed.

CD2F 003

0 8 5 8

Contacts: Bill Zeigler, Ann Elizabeth Lovett

Company: Hazardous Waste Treatment Council

Phone:

Date: 3 June, 1992

Caller: Bengie Carroll (EPA), Lisette Lambregts (ICF), Gary Light (ICF), Prakash Ramaswamy (ICF)

Subject: Updated Capacity Information

Report of Discussion:

Background and Purpose:

The purpose of the conference call was to clarify the information provided by HWTC in its June 1, 1992 letter to Bengie Carroll. In the spring of 1992, HWTC conducted a survey, and learned that approximately 10 commercial combustion facilities have available treatment capacity. Much of this is in the form of new equipment or aquisitions, which we would not have been reported by HWTC members last August. EPA began the discussion by explaining that it defines "available" capacity as capacity that is in place, tested, permitted, and not utilized. EPA also noted the need for facility-specific information to confirm and reconcile with other information.

ThermalKEM Expansion:

ThermalKEM now owns and operates a lightweight aggregate facility (2 kilns) in New York that it acquired from Norlite. They have updated the air pollution control system, and are permitted as an incinerator (the state of NY requires BIFs be permitted as incinerators) as of last Thursday. They burn similar feeds as cement kilns, cannot take soils, have never burned F037/8, require wastes greater than 5 or 6,000 BTU/lb. Are most concerned about metals (14 metals in permit). Will begin operating week of 10 June 1992. Sample analysis takes 2 weeks.

Clarification:

The capacity estimates they faxed to EPA were aggregated, by facility, and also by waste type. EPA explained that we have conducted a facility specific capacity analysis, and that it is difficult to compare their data with EPA's. For the F037/8 capacity analysis it is also important to break apart available capacity by feed system. HWTC data reported only "excess", or available capacity, as interpreted by the respondents. EPA is interested in also having maximum, and utilized volumes, for comparison to its own data.

HWTC could not estimate rejection rates, commenting that few of their members have seen F037/8 and suspects that the F wastes they have seen are also carrying the K048-52 codes. They also commented that, contrary to API's assertion, the amounts of K wastes have been decreasing and that they suspect generators have been relabeling K wastes as F wastes.

Followup:

Facility specific information is not available at this time, but HWTC agreed to get approval from its members and provide facility specific capacity information.

NOTICE
If the filmed image is less clear than this Notice it is due to the quality of the document being filmed.

CD2F 003

0 0 5 9

C - 81

HAZARDOUS WASTE TREATMENT COUNCIL

HWTC

1440 New York Avenue, N.W.
Suite 310
Washington, D.C. 20005
(202) 783-0870

HAZARDOUS WASTE TREATMENT COUNCIL
1440 New York Avenue, NW
Suite 310
Washington, DC 20005

Phone: 202/783-0870
Fax: 202/737-2038

NOTICE
If the filmed image is less clear than this Notice it is due to the quality of the document being filmed.

Date: 6/1/92

PLEASE DELIVER (ASAP) THE FOLLOWING PAGES TO:

Name: Benji Carroll

Company: EPA

Phone No: -

Fax No: 703/308-8604

Note(s): Capacity information.
cc: Steve Silverman

FROM:

Name: Richard C. Fortuna, Executive Director

Company: Hazardous Waste Treatment Council

Total Number of Pages (Including Cover) 5

If there is a problem and you do not receive all of the following pages, please contact _____ at the Treatment Council offices at the above number.

Made from recycled paper

CD2F 003

0 8 6 0

NOTICE
If the filmed image is less clear than this Notice it is due to the quality of the document being filmed.

CD2F 003

1) Cement kiln recycling

Three of the 14 companies use cement kiln recycling technologies to treat these wastes, with a current overall available capacity of 270,000 T/Y and 69,624,000 G/Y. One company noted that organic liquids only are planned for the two plants that should be on line by the end of 1992. Another noted that for the treatment of F037 and F038 petroleum refining wastes, the material must have a minimum fuel value of 5,000 BTU/lb. The cement kilns have capacity to treat the following wastes: OTC wastes (230,000 T/Y and 62,600,000 g/y); contaminated soil (1,000,000 G/Y); F037 and F038 petroleum refinery wastes (20,000 T/Y and 18,600,000 G/Y); F032, F034 and F035 (20,000 T/Y and 10,400,000 G/Y); and K088 (24,000 G/Y).

Available cement kiln recycling capacity of 294,500 T/Y and 87,624,000 G/Y is expected on line by the end of 1993. Treatment of the following wastestreams will be available at that time: OTC wastes (254,500 T/Y and 90,800,000 G/Y); contaminated soil (24,500 T/Y and 5,000,000 G/Y); F037 and F038 (44,500 T/Y and 22,600,000 G/Y); F032, F034 and F035 (44,500 T/Y); and K088 wastes (24,500 T/Y and 24,000 G/Y). One company anticipates it will have two additional RCRA waste facilities permitted by the end of 1996 with an additional overall capacity of 24,500 T/Y.

2) High-temperature incineration

Seven of the 14 companies use incineration to treat these wastes. Current available capacity is 328,505 T/Y, ranging from companies with 9,000 T/Y capacity to ones with 109,000 T/Y. Several companies noted that this capacity is newly available, but is already dedicated to particular customers or wastestreams. Also, in many cases, the incinerators are permitted for all the wastestreams, so they listed overall capacity without breaking it down further. Incineration is currently used to treat the following wastes with the capacity, if separately specified, noted parenthetically: OTC waste (54,000 T/y); contaminated soil (12,005 T/y); F037 and F038 petroleum wastes 67,000 T/y); F032, F034 and F035 wastes; and K088 wastes. One company noted that treatment by incineration is followed by chemical stabilization of inorganics, but this is probably standard practice among all companies.

Incineration capacity by the end of 1993 is expected to be 662,500 T/y. Capacity for the following wastestreams should be available: OTC wastes (42,000 T/Y); contaminated soils (87,000 T/y); F037 and F038

0 8 6 1

petroleum refinery wastes (60,500 T/y); K088 (50,000 T/y). One company noted that it is unlikely to add F032, F034 and F035 capacity due to anticipated inability or difficulty in meeting BDAT for related constituents. That company added that it is unlikely to pursue a permit for K088 because aluminum potliners are not well suited for incineration.

3) Inorganic Stabilization

One of the 14 companies uses inorganic stabilization technology with a current available capacity of 252,000 T/y of wastewater. The technology is used to treat OTC wastes (134,000 T/y wastewater); and contaminated soils (118,000 T/y). For 1993 the available capacity is expected to remain at 252,000 T/y.

4) Solvent Extraction

Two of the 14 companies use solvent extraction to treat F037 and F038 petroleum refinery wastes, with a current available treatment capacity of 220,000 T/y. Only one of these companies plans to expand its capacity by the end of 1993 -- at which point it could have a total treatment capacity of 560,000 T/y. Additional capacity can be added at the rate of 175,000 tons every six months. The only factor restraining this potential capacity is lack of demand, with potential capacity sitting idle.

5) Mobile waste-derived-fuel processing unit

One of the 14 companies uses MWDF technology, and has a current capacity of 40,800 T/y with an expansion to 163,200 T/y expected by the end of 1992. This technology is currently used to treat the following wastes: OTC wastes; contaminated soils; and F037/F038 petroleum refinery wastes. By the end of 1993, the company anticipates available capacity of 301,920 T/y for the same three wastestreams. Additional expansion at the rate of 85 percent/year is planned through CY95. The company noted that additional expansion of capacity is dependent on neither permitting nor technology problems, but solely on business needs, "Whether the market for organic hazardous waste needs expansion due to insufficient capacity in competing technologies."

NOTICE
If the filmed image is less clear than this Notice it is due to the quality of the document being filmed.

CD2F 003

0 0 6 2

6) Cyanide Alkaline Chlorination

One of the 14 companies uses cyanide alkaline chlorination technology with a current available capacity of 118,000 T/y. This technology is used to treat contaminated soils. For 1993 the available capacity is expected to remain at 118,000 T/y.

7) Container processing system

One of the 14 companies uses CPS technology, and has a current capacity of 12,800 T/y, available for OTC wastes, contaminated soils, and F037/F038 petroleum refinery wastes. By the end of 1993, the company anticipates available capacity of 19,200 T/y for the same three wastestreams. The company anticipates further growth at a rate of 25 percent/yr through CY95.

8) Wastewater treatment

One of the 14 companies uses wastewater treatment technology with a current available capacity of 18,200,000 G/y. This is available for: OTC wastes; F037 and F038 petroleum refinery wastes (10,400,000 G/y) and F032, F034 and F035 wastes (10,400,000 G/y). No additional capacity is planned for 1993. This company notes that with the wastewater treatment technology it treats aqueous wastes with typically <100 ppm total organics.

NOTICE
If the filmed image is less clear than this Notice it is due to the quality of the document being filmed.

CD2F 003

0 0 6 3

NOTICE
If the filmed image is less clear than this Notice it is due to the quality of the document being filmed.

CD2F 003

0864

ATTACHMENT A

TOTAL AVAILABLE CAPACITY AND SOME DEDICATED CAPACITY BY WASTESTREAM *

	1992	1993
OVERALL CAPACITY	1,364,505 T/Y 87,824,000 G/Y	2,218,120 T/Y 105,824,000 G/Y
OTC Wastes	594,000 T/Y 80,800,000 G/Y	751,620 T/Y 90,800,000 G/Y
Contaminated Soils	424,005 T/Y 1,000,000 G/Y	422,620 T/Y (50,000 T/Y) 5,000,000 G/Y
F037 and F038 Petroleum Refinery Wastes	319,800 T/Y 29,000,000 G/Y	996,120 T/Y 33,000,000 G/Y
F032, F034 and F035 Wastes	20,000 T/Y 10,400,000 G/Y	44,500 T/Y 10,400,000 G/Y
X028 Wastes	24,000 G/Y	74,500 T/Y 24,000 G/Y

* Note: The capacity listed for each individual wastestream is only an indication of the capacity available for that wastestream. Some capacity can be used for more than one wastestream, hence the capacity for individual wastestreams exceeds the actual total overall capacity available.

C - 86

HAZARDOUS WASTE TREATMENT COUNCIL

HWTC

1440 New York Avenue, N.W.
Suite 310
Washington, D.C. 20005
(202) 783-0870

NOTICE
If the filmed image is less clear than this Notice it is due to the quality of the document being filmed.

HAZARDOUS WASTE TREATMENT COUNCIL
1440 New York Avenue, NW
Suite 310
Washington, DC 20005

Phone: 202/783-0870
Fax: 202/737-2038

Date: 6/12/92

PLEASE DELIVER (ASAP) THE FOLLOWING PAGES TO:

Name: Benji Carroll

Company: U.S. EPA

Phone No: _____ Fax No: 703/308-8604

Note(s): Attached is a copy of the survey that was sent out to our membership. 14 companies responded. Bill Ziegler will be available to discuss the survey results Wed. morning at 10:00 a.m. Please call to confirm.

FROM:

Name: Ann Elizabeth Lovett

Company: Hazardous Waste Treatment Council

Total Number of Pages (Including Cover) 4

If there is a problem and you do not receive all of the following pages, please contact the Treatment Council offices at the above number.

Made from recycled acid-free fiber

CD2F 003

0 8 6 5

NOTICE
If the filmed image is less clear than this Notice it is due to the quality of the document being filmed.

CD2F 003

0 0 6 6

HWTC CAPACITY SURVEY

ANPRM 2, October 24, 1991

1. What type of technology do you have for treatment or remediation of contaminated soil?

   For OTC wastes?

   For F037, and F038 petroleum refining wastes?

2. Please identify the available treatment technologies your company has for eas waste listed below and indicate the unutilized treatment capacity for each technology. Please take additional space if necessary.

Waste Type	Unutilized Capacity by Technology			
	1	2	3	4
OTC Waste				
Contaminated Soil				
F037, F038				
F032, F034 F035				
K088				

3. What treatment capacity are you currently planning that could be available in 1993 or later for these types of waste?

Waste Type	Future Capacity by Technology			
Technology	1	2	3	4
OTC Waste				
Contaminated Soil				
F037, F038				
F032, F034 F035				
K088				

4. What are the key factors in making this capacity available?

Permitting:

Business Decision:

Availability of Technology/Equipment:

Other (please explain):

NOTICE
If the filmed image is less clear than this Notice it is due to the quality of the document being filmed.

CD2F 003

0 8 6 7

5. Remediation Companies

Please describe the capacity your company has for remediation of contaminated soil. How many tons/year of soil do you remediate currently? How many additional ton/year of soil could you manage in the future, if the land disposal restrictions created additional capacity demand, and the GA Guidance was adopted as BDAT?

NOTICE
If the filmed image is less clear than this Notice it is due to the quality of the document being filmed.

CD2F 003

0 0 6 8

Contact: Mike Benoit

Company: Cadence Chemical Resources

Phone: 401-392-0151

Date: 6/8/92

Caller: Gary Light

Subject: Combustion Capacity at Cadence Facilities and BIF Rule Impacts (Non-CBI Version)

Report of Conversation:

Cadence Chemical Resources manages the hazardous waste program and/or licenses its solid hazardous waste fuel technology to Ash Grove Cement Company, Southdown Incorporated, and ESSROC Cement Group. The purpose of this call was to resolve discrepancies in available capacity estimates for these facilities and to clarify the nature and extent of reported problems cement kilns are having as they attempt to certify compliance with hydrocarbon emission limits required by the BIF rule to maintain interim status as a hazardous waste facility. Confidential Business Information (CBI) contained in a CBI version of this report has been removed in this Non-CBI version.

Available Capacity at Each Kiln Equipped with the Cadence System

Mr. Benoit summarized his estimation of capacity at each cement kiln unit as follows. Each kiln nominally feeds one container (pail or bag) to a kiln per minute (this generally corresponds to one container per rotation of the kiln). Each pail typically contains 55 pounds of waste, and each kiln operates 85 percent of the year (accounting for winter shutdown and other maintenance). Consequently, each kiln can readily accept 40 tons of waste per day (or approximately two truckloads per day). This corresponds to about 12,400 tons of waste per year. If warranted by demand, each kiln could roughly double this throughput by either stacking a second container on the feed chute used for wet process kilns or by doubling the cycle rate of automated feed systems used on preheater-type kilns. In general Mr. Benoit estimates that this "doubling" would actually be possible about 50 percent of the time without potentially compromising BIF rule compliance. Mr. Benoit added that petroleum refining wastes are particularly amenable to such "doubling" due to their low heating value and relatively consistent physical and chemical properties compared to other waste fuels.

NOTICE
If the filmed image is less clear than this Notice it is due to the quality of the document being filmed.

CD2F 003

0 8 6 9

NOTICE
If the filmed image is less clear than this Notice it is due to the quality of the document being filmed.

Ash Grove Capacity

Seven kilns at three Ash Grove facilities are configured with the Cadence technology: two preheater kilns in Louisville, Nebraska; three wet process kilns in Foreman, Arkansas; and two wet process kilns in Chanute, Kansas. Only two of the three kilns at Ash Grove's Foreman, Arkansas facility generally operate at any given time. Therefore, Mr. Benoit estimated that Ash Grove's total capacity while feeding one pail per minute is roughly 75,000 tons per year (12,400 tons per year at each of six kilns). For wastes, such as petroleum refining sludges, that are relatively easy to feed at a rate of two pails per minute, Mr. Benoit estimated Ash Grove's capacity to be 110,000 tons per year (18,600 tons per year at each of six kilns feeding one pail per minute half of the time and two pails per minute half of the time). In 1991, Ash Grove burned 2,300 truckloads of wastes containing roughly 20 tons each or a total of 46,000 tons of containerized wastes. Therefore, Mr. Benoit estimated that Ash Grove has roughly 29,000 tons per year of excess capacity burning only one pail per minute (75,000 - 46,000 tons per year) or about 64,000 tons per year (110,000 - 46,000) if they feed two containers per minute about half of the time they are operating.

Southdown Capacity

Southdown Incorporated currently operates one preheater kiln at the Dixie Cement plant in Knoxville, Tennessee. Mr Benoit did not provide specific maximum or utilized capacity estimates for this facility, but he noted that his discussion of capacity for each individual kiln applies to any kiln equipped with the Cadence technology. He did report that this facility has received authorization to burn K048-K052 and has begun burning this waste. He also noted that the facility has raised its permitted mercury limit, which had previously been an obstacle to the facility's ability to accept certain wastes. Mr. Benoit did not know if the facility had received approval of its permit modification to accept F037 and F038, but he believed it had.[1]

ESSROC Capacity

Mr. Benoit reported that ESSROC's facility in Logansport, Indiana has recently equipped its two wet process kilns with the Cadence system. The facility has been receiving containerized solids since August 1991. The facility is permitted for K048-K052 and has been burning K048-K052 as a slurry through the Cemtech suspension system. It has burned little, if any, K048-K052 in containers. Mr. Benoit believes the ESSROC facility is also permitted for F037 and F038, but he was not certain[2]. Like other kilns equipped with the

[1] On June 22, 1992, Mr. Benoit submitted comments on this report confirming that the Dixie Cement plant is authorized for F037 and F038.

[2] On June 22, 1992, Mr. Benoit submitted comments on this report confirming that the ESSROC plant in Logansport, Indiana is authorized for F037 and F038.

CD2F 003

0 0 7 0

Cadence system, each of the two kilns at this facility has a capacity of 20 tons per day or about 12,400 tons per year burning one pail per minute.

BIF Hydrocarbon Limits

Mr. Benoit acknowledged that some cement kilns are experiencing difficulty with the 20 ppm hydrocarbon emission limits required to certify compliance with the BIF rule interim status requirements. He reported that only one of the facilities that use the Cadence system, Ash Grove's Chanute, Kansas facility, routinely emits above 20 ppm hydrocarbon from raw materials and is therefore having difficulty meeting BIF rule requirements. He provided the following information on the status of BIF interim status compliance certification at each of the cement kilns equipped with the Cadence process. Ash Grove has submitted Certification of Compliance (COC) forms for one kiln at the Foreman Arkansas facility, is conducting tests for a second kiln in July, and is working on an equivalency certification for the third kiln (equivalency certification allows identical units to certify compliance based on testing of only one of the units). Ash Grove conducted COC testing at the Louisville, Nebraska facility in May and plans to submit COC forms by late July. Ash Grove is having trouble at its Chanute, Kansas facility because the facility hydrocarbon emissions from raw materials are routinely above 20 ppm, and these levels vary unpredictably. Mr. Benoit does not expect the facility to cease hazardous waste operations, but it may have to seek a case-by-case extension of the deadline for certifying BIF rule compliance. If necessary, the facility will implement a technology that Ash Grove has developed and is seeking to patent. This technology is designed to enable the kilns to comply with the BIF hydrocarbon limits. ESSROC has completed COC testing at its Logansport, Indiana facility and will submit COC forms by late July. Southdown/Dixie has tested and certified its kiln in Knoxville, Tennessee.

NOTICE
If the filmed image is less clear than this Notice it is due to the quality of the document being filmed.

CD2F 003

0 8 7 1