United States
Environmental Protection
Agency

Solid Waste and
Emergency Response
(5305W)

EPA530-R-97-037e
NTIS: PB97-177 463
June 1992

EPA

Background Document for Capacity Analysis for Newly Listed Wastes and Hazardous Debris to Support 40 CFR 268 Land Disposal Restrictions (Final Rule)

Volume 5:
Appendix D - Category 1 Facilities for the F037 and F038 Capacity Analysis

Printed on paper that contains at lest 20 percent postconsumer fiber

CD2F-S0049

NOTICE
If the filmed image is less clear than this Notice it is due to the quality of the document being filmed.

Background Document for Capacity Analysis for Newly Listed Wastes and Hazardous Debris to Support 40 CFR 268 Land Disposal Restrictions (Final Rule)

CD2F 003

Volume 5: Appendix D - Category 1 Facilities for the F037 and F038 Capacity Analysis

United States Environmental Protection Agency
Office of Solid Waste
401 M Street, N.W.
Washington, D.C. 20460

0 8 7 3

June 1992

APPENDIX D

CATEGORY 1 FACILITIES

D.1 Interview Guide

D.2 Recent Information Obtained from Refinery Visits

D.3 Recent Information Submitted by Category 1 Facilities
[Note: Some Catagory 1 facilities have declared their information confidential. This information is in the RCRA CBI docket.]

NOTICE
If the filmed image is less clear than this Notice it is due to the quality of the document being filmed.

CD2F 003

0 0 7 4

NOTICE
If the filmed image is less clear than this Notice it is due to the quality of the document being filmed.

CD2F 003

0 8 7 5

D.1 Interview Guide

F037 F038 WASTE CAPACITY ANALYSIS -- REFINERY INTERVIEW

STATE:

COMPANY:

ADDRESS:

CONTACT: PHONE NUMBER:

POSITION: (FAX NUMBER):

REFERENCE:

DATE: TIME:

CALLER: EXTENSION:

Notes:

- CBI claims?
- Fill out responses to attached interview guide
- Need to fax information to contact person?
- Items contact will send:

- Miscellaneous notes:

NOTICE
If the filmed image is less clear than this Notice it is due to the quality of the document being filmed.

CD2F 003

0 8 7 6

NOTICE
If the filmed image is less clear than this Notice it is due to the quality of the document being filmed.

CD2F 003

0 8 7 7

F037 AND F038 QUESTIONS

We have developed a preliminary series of questions to aid in our understanding of how the new F037 and F038 waste listing and proposed land ban will affect refineries. These questions involve not only F037 and F038 wastes, but expand to K048-K052 and TC wastes, discuss past and future waste water treatment facility modifications, on site treatment, etc., in order for us to get an understanding of the whole picture and how everything interrelates. In addition to gaining an overall understanding of the issues, we want to discover any unique problems or treatability issues that refineries may have associated with these wastes. Please complete the questions below on separate pieces of paper and mail to Ms. Jo-Ann Bassi (U.S. EPA) before June 1, 1991.

1.0 Waste Water Treatment Facility

- 1.1 What is your current configuration (schematic) ?
- 1.2 How segregated is your system, stormwater vs. process water?
- 1.3 What modifications have been made in the last 5 years?
- 1.4 What were the driving forces behind these modifications?
- 1.5 What future modifications are planned?
- 1.6 What are the driving forces behind these modifications?
- 1.7 How have the K048-K052, TC and F037/F038 rulings and land bans affected the facility in terms of modifications, operation, capacity, etc.?

2.0 K048-K052 and TC Wastes

- 2.1 What is your estimated rate of generation and land disposal of K048-K052 and TC wastes?
- 2.2 How do you currently treat, recycle or dispose of these wastes and are there any foreseeable changes in the treatment, recycling or disposal?
- 2.3 How have the waste generation rates changed with the hazardous waste ruling and land ban?

2.4 • Have there been any upstream or waste water treatment facility operating changes to reduce the amount of these wastes generated and how effective are these changes?

2.5 • Will the proposed F037 and F038 land ban affect the amount of these wastes produced?

2.6 • How much of these wastes are stockpiled in containers or surface impoundments?

2.7 • What are the chemical and physical characteristics of the currently generated and stockpiled wastes (ie. are they dewatered, do they have significant btu value, etc.)?

2.8 • How will these characteristics change with any planned facility modifications and operating changes?

2.9 • What quantity of your secondary treatment waste, such as sludge from the aggressive biological units, is categorized as TC waste?

3.0 F037 and F038 Wastes

3.1 • Is there a current estimate of the amount of F037 and F038 wastes generated?

3.2 • Is there an estimate of the amount of F037 and F038 wastes stockpiled in containers or surface impoundments?

3.3 • What are you currently doing with the stockpiled waste and what are your future plans?

3.4 • What are the chemical and physical characteristics of both the currently generated and the stockpiled wastes?

3.5 • What is your current treatment, recycle or disposal method and how will this change with the land ban?

3.6 • What are the capacities of these treatment, recycle and disposal methods in relationship to F037 and F038 wastes?

NOTICE
If the filmed image is less clear than this Notice it is due to the quality of the document being filmed.

CD2F 003

0 0 1 8

3.7 • Are there any planned changes, either physical or operational, to deal with the land ban and how will these changes affect K048-K052 waste generation?

3.8 • Is it possible to reduce F037/F038 or K048-K052 wastes by putting more of a load on the aggressive biological units?

4.0 General

4.1 • What are your offsite treatment options and are the unique features of your waste that would limit the treatability options?

4.2 • What modifications have been done or are planned upstream to reduce the amount of waste generated in the waste water treatment facility (eg. pretreatment, source control, segregation, etc.)?

4.3 • Will the BIF rulings affect any of the current disposal options, onsite, captive or commercial?

4.4 • Is there a preference on producing F037/F038 wastes or K048-K052 wastes in terms of handling or disposal?

4.5 • What is the frequency of cleanout for the various waste water treatment units (eg. API, DAF, storage tank, surface impoundments, etc.) ?

While some of these questions are very specific, we realize that initially not all of the exact quantities, etc. will be available. The main purpose of the questions is to get an overall understanding, to get a feel for how much planning is taking place, how much data is available, and what are the unique problems that the refineries will encounter.

NOTICE
If the filmed image is less clear than this Notice it is due to the quality of the document being filmed.

CD2F 003

0 0 7 9

D.2 Recent Information Obtained from Refinery Visits

The refineries visited by EPA are listed below.

- Chevron (El Segundo, CA)
- Ultramar (Wilmington, CA)
- Amoco (Whiting, IN)
- Amoco (Texas City, TX)

NOTICE
If the filmed image is less clear than this Notice it is due to the quality of the document being filmed.

CD2F 003

0 8 8 8 0

F037 AND F038 WASTE CAPACITY ANALYSIS:
DATA USE AND TRACKING SHEET

Refinery: Chevron - El Segundo Refinery
State: California

Data sources available:

_x_ Petroleum refinery visits/voluntary submission

_x_ National Survey of Hazardous Waste Treatment, Storage, Disposal, and Recycling Facilities (TSDR survey)

__ National Survey of Hazardous Waste Generators

__ Biennial report/state reporting requirements

__ California hazardous waste data base

_x_ Petroleum refinery data base (PRDB)

__ No-migration petitions

Basis for F037 and F038 waste estimation:

EPA used data provided by Chevron (El Segundo Refinery) because it was the most recent and the only source that describes F037 and F038 waste generation and management. Other sources were used only in comparison with the refinery's data submission.

F037 and F038 waste estimates:

F037/8 (routine) = 2,600 tons/yr of dewatered cake resulting from 44,800 tons/yr of wet sludge from holding tanks, and IAF units (assuming reported daily quantities are generated 365 days/year).

Chevron El Segundo reports no other F wastes than those identified above.

NOTICE
If the filmed image is less clear than this Notice it is due to the quality of the document being filmed.

CD2F 003

0001

MEMORANDUM

EL SEGUNDO REFINERY
May 23, 1991

F037 & F038 Waste Issues

Mr. Bob Goeltz & James Hsu:
ICF Kaiser Engineers

Listed below are our responses to your list of questions regarding Refinery F Wastes:

WASTE WATER TREATMENT FACILITY

- *What is your current configuration (schematic)?*

See attached schematic.

- *How segregated is your system, stormwater vs. process water?*

We have two systems: one handles process contacted wastewater and the other handles water that has not had contact with any process streams. They do not meet until after treatment is complete.

- *What modifications have been made in the last 5 years?*

We have added new storage tanks for wastewater. These tanks are used in the event the water does not meet the effluent standards in our NPDES permit. The treated water is then returned to these tanks for further treatment before discharge. Three new IAF's have been installed, one treats the water from the desalters at the crude units and the other two treat water before discharge under our NPDES permit (it joins another unit already in this service).

- *What were the driving forces behind these modifications?*

NPDES permit compliance.

- *What future modifications are planned?*

None.

- *What are the driving forces behind these modifications?*

N/A

- *How have K, TC and F rulings and Land Bans affected the facility in terms of modifications, operations, capacity, etc.?*

We have made changes to our operation to provide more segregation between our systems that produce K and F waste.

K AND TC WASTES

- *What is your estimated rate of generation and land disposal of K and TC wastes?*

We produce approximately 10 tons per day of dewatered K waste. This material is then fed to our Thermal Distillation Unit (TDU) for oil recovery where the resulting material for land disposal is reduced to roughly 3 tons per day.

NOTICE: If the filmed image is less clear than this Notice it is due to the quality of the document being filmed.

CD2F 003

0882

We do not produce any continuous streams of TC waste. We expect that some intermittent sources will produce TC waste (i.e. spills, tank cleaning sludge, filters), but we do not have estimates available for this generation.

- *How do you currently treat, recycle or dispose of these wastes and are there any foreseeable changes in the treatment, recycling or disposal?*

We currently feed about 200 BPD of K waste to our Coker using the Mobil Oily Sludge Coking process. The remaining K waste is dewatered using a centrifuge or filter press and then fed to TDU. The solids from TDU meet the landban standards for the organics, but fail for nickel and cyanides. As a result, the solids are sent off-site for neutralization and stabilization prior to disposal.

TC waste is currently sent off-site for disposal. We expect that after we improve the operation of TDU, we may have enough capacity to feed sludges or contaminated soil that fails the benzene TC limit. We would expect that any benzene contaminated material processed at TDU would pass the TC limit and would then be considered non-hazardous.

- *How have the waste generation rates changed with the hazardous waste ruling and Land Ban?*

The total generation of sludges generated from our wastewater system has not changed since the land ban went into effect. However, we are taking steps to make sure that sludges that are not K waste do not mix with K waste streams to minimize the generation of K waste.

- *Have there been any upstream or waste water treatment facility operating changes to reduce the amount of these wastes generated?*

See above.

- *Will the new F Waste Land Ban affect the amount of these wastes produced?*

We expect that we will have improved the operation of TDU by the time the F waste land ban goes into effect, so that there will be capacity to feed F waste. This will reduce the amount of F waste to disposal by 65%.

- *How much of these wastes are stockpiled in containers or surface impoundments?*

Since F waste and TC waste go directly to disposal, none of this material is stockpiled. Since our K waste is fed to TDU, the amount of material stored on-site varies depending on the current generation of K waste and the feed rate of TDU.

- *What are the chemical and physical characteristics of the currently generated and stockpiled wastes (ie. are they dewatered, do they have significant btu value, etc.)?*

The K waste which is fed to TDU has been dewatered (~35% solids). Testing has shown the material has a low BTU value between 1000 and 2000 BTU/lb.

- *How will these characteristics change with any planned facility modifications and operating changes?*

No change is expected.

- *Are any of your secondary treatment waste, such as sludge from the aggressive biological units, categorized as TC waste?*

No. The biomass from our activated sludge unit has been tested and is non-hazardous.

F WASTES

- *Is there a current estimate of the amount of F Wastes generated?*

Our current generation of F waste is roughly 700 barrels per day which results in about 7 tons per day of dewatered cake.

NOTICE
If the filmed image is less clear than this Notice it is due to the quality of the document being filmed.
CD2F 003
0003

- *Is there an estimate of the amount of F Wastes stockpiled in containers or surface impoundments?*
We are not stockpiling any F waste.

- *What are you currently doing with the stockpiled waste and what are your future plans?*
N/A.

- *What are the chemical and physical characteristics of both the currently generated and stockpiled wastes?*
N/A.

- *What is your current treatment, recycle or disposal method and how will this change with the land ban?*
F waste is currently dewatered and then sent out for land disposal. By the time the F waste land ban goes into effect, we expect there will be capacity at TDU to feed F waste.

- *What are the capacities of these treatment, recycle and disposal methods in relationship to F Waste?*
After the current operating problems at TDU are solved, we expect the TDU feed capacity to be approximately 9000 tons per year which will keep up with our F and K waste generation which is estimated at 6500 tons per year.

- *Are there any planned changes, either physical or operational, to deal with the land ban and how will these changes affect K Waste generation?*
We are looking at various operational changes in our Effluent Treatment Plant that may reduce the amount of F waste generation.

- *Is it possible to reduce F or K Wastes by putting more of a load on the aggressive biological units?*
No, the aggressive biological treatment unit (our Effluent Treatment Plant) is already fully loaded. Also, the state of California does not allow the treatment or disposal of listed waste in a wastewater treatment unit without a Hazardous Waste Treatment permit which the Refinery does not have.

GENERAL

- *What are your offsite treatment options and are there unique features of your waste that would limit the treatability options?*
In our investigation of off-site treatment options as an alternative to our TDU, we have found that our K waste has too low of a BTU value to be accepted by cement kilns. Incineration is the only other treatment option we have researched. In general, we have found very limited incineration capacity available. Plus several of the incinerators can only accept waste in small containers (drums or boxes) which requires repackaging of all our waste. As a contingency plan, we have active profiles for incineration at the Port Arthur incinerator. However, we would be limited on the amount we could ship due to the high moisture content of our cake. We were instructed that we would have to go through an additional drying step on our cake to send large volumes of our waste to the incinerator.

- *What modifications have been done or are planned upstream to reduce the amount of waste generated in the waste water treatment facility (eg. pretreatment, source control, segregation, etc.)?*
The Refinery has made extensive efforts in the past to reduce the amount of wastes entering the drainage systems and to insure our waste streams are properly segregated.

- *Will the BIF rulings affect any of the current disposal options, onsite, captive or commercial?*
No.

NOTICE
If the filmed image is less clear than this Notice it is due to the quality of the document being filmed.
CD2F 003
0 0 8 4

- *Is there a preference on producing F Waste or K Waste in terms of handling or disposal?*

F Waste is preferred over K Waste because the land bans are not in effect for F Wastes yet.

- *What is the frequency of cleanout for the various waste water treatment units (eg. API, DAF, storage tank, surface impounds, etc.)?*

Float from IAF, DAF units and the forebay are generated on a continuous basis as well as slop oil emulsion from the recovered oil system. Sludges from the waste water tanks and API separators are each cleaned out about once a year.

NOTICE
If the filmed image is less clear than this Notice it is due to the quality of the document being filmed.

CD2F 003

0 0 8 8 5

SIMPLIFIED WASTEWATER FLOW DIAGRAM
F037 & F038 GENERATION

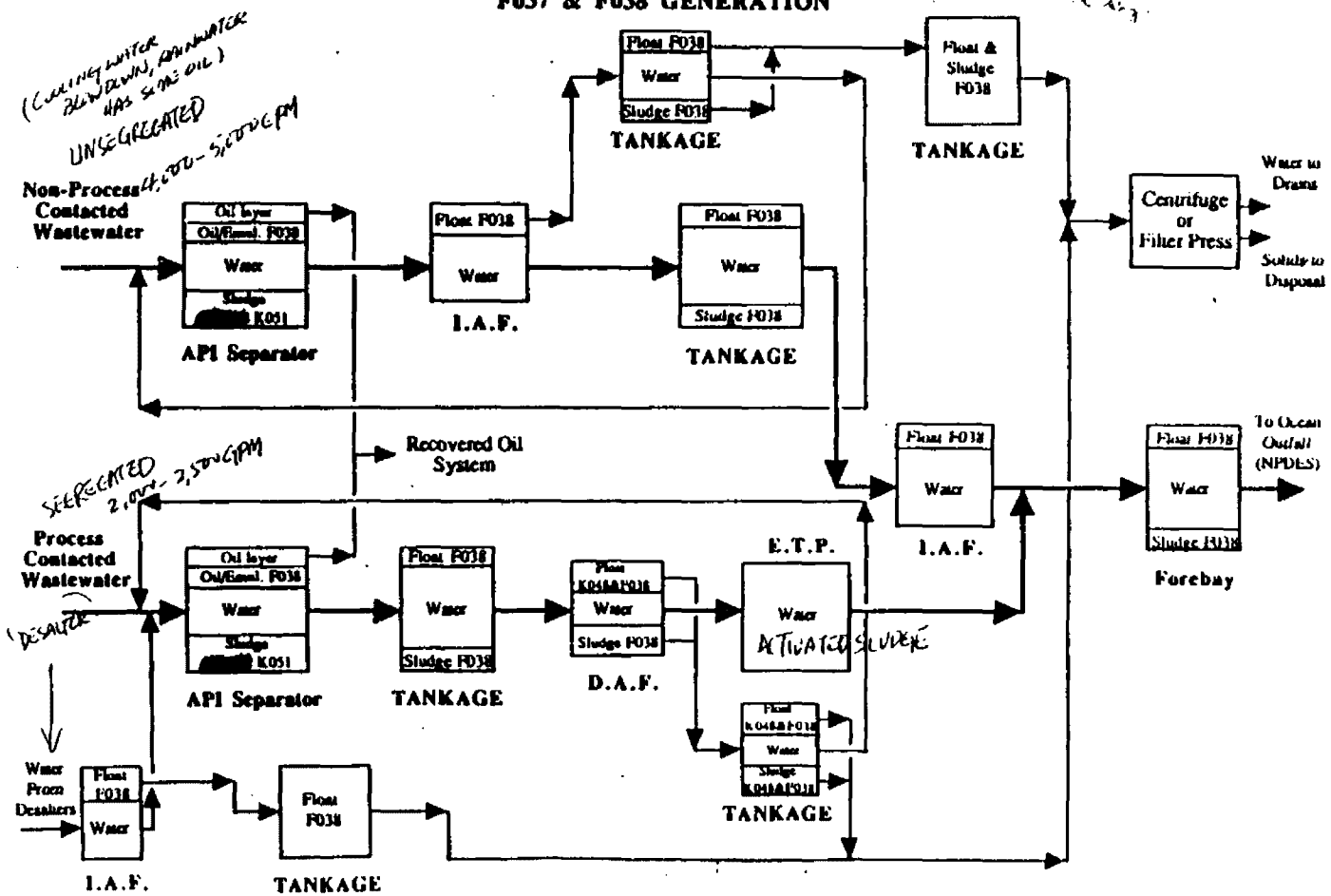

NOTICE
If the filmed image is less clear than this Notice it is due to the quality of the document being filmed.

SIMPLIFIED WASTEWATER FLOW DIAGRAM
F037 & F038 GENERATION

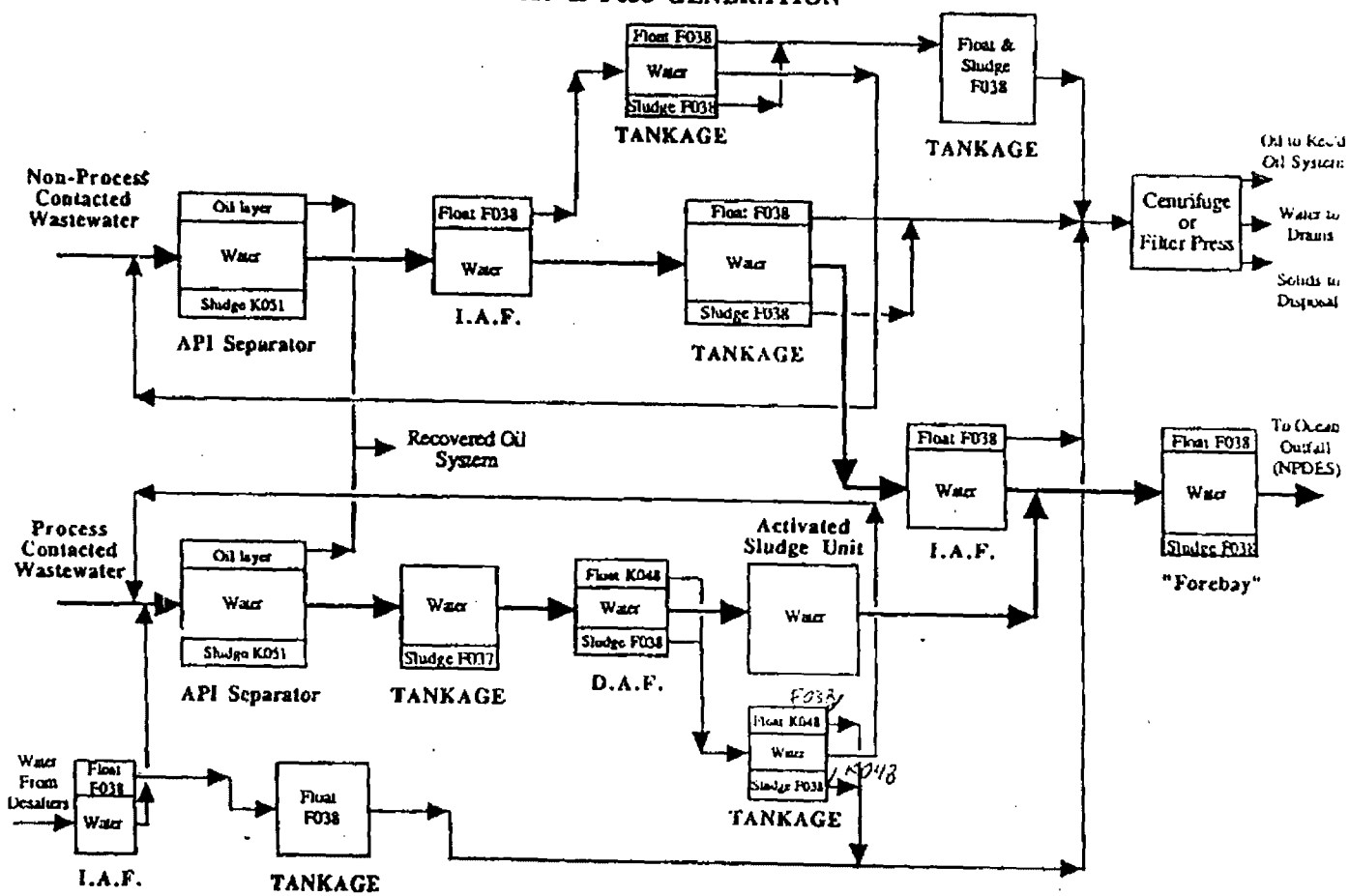

CRTC ENVIRONMENTAL-JSC TEL:(1)-415-620-1580

NOTICE
If the filmed image is less clear than this Notice it is due to the quality of the document being filmed.

CD2F 003

0881

NOTICE
If the filmed image is less clear than this Notice it is due to the quality of the document being filmed.

CD2F 003

0888

F037 AND F038 WASTE CAPACITY ANALYSIS:
DATA USE AND TRACKING SHEET

Refinery: Ultramar - Wilmington Refinery
State: California

Data sources available:

_x_ Petroleum refinery visits/voluntary submission

_x_ National Survey of Hazardous Waste Treatment, Storage, Disposal, and Recycling Facilities (TSDR survey)

__ National Survey of Hazardous Waste Generators

__ Biennial report/state reporting requirements

_x_ California hazardous waste data base

_x_ Petroleum refinery data base (PRDB)

__ No-migration petitions

Basis for F037 and F038 waste estimation:

EPA used data provided by Ultramar (Wilmington refinery) because it was the most recent and the only source that describes F037 and F038 waste generation and management. Other sources were used only in comparison with the refinery's data submission.

F037 and F038 waste estimates:

F037/8 (routine) - 50 tons/year from PPI and IAF units, and from sewer cleanouts.

F037 - 383 tons/yr. from periodic clean out of junction box.

Ultramar reports no other F wastes than those identified above.

TRIP REPORT[1]
ULTRAMAR REFINERY VISIT (5/24/91)

Ultramar Attendees: Les Norton
Steve Faichney
Willy Nakahara

EPA Attendees: Jo-Ann Bassi (OSW)
Bob Goeltz (ICF Inc.)
James Hsu (ICF Inc.)

REFINERY DESCRIPTION

The Ultramar refinery in Wilmington, California, previously owned by Champion, is the only refinery in the United States owned by Ultramar, a British company. The refinery produces primarily gasoline, processing up to 68 thousand barrels of crude oil per day. The crude refining area was built in 1950, and the refinery's octane processing area was built in 1960. The facility reports an average water outfall of 850 thousand gallons per day.

The facility has reduced the source of sludges by paving and by segregation of non-contact process water streams from contact wastewater streams in the last five years.

Plans for future modifications include:

- Increasing surge capacity and primary effluent quality.
- More recycling of non-contact waters back to processing.
- Keeping dirt out of the system. By paving, Ultramar expects that waste sludge generation would decrease by 10 percent.
- Retrofitting the basin to reduce vapors.

According to Ultramar, existing and future regulations concerned with water quality have resulted in generation of more sludge. The wastewater treatment sludge ruling will not change current petroleum refining waste generation rates.

WASTEWATER TREATMENT SYSTEM

Exhibit 1 presents a simplified wastewater treatment flow diagram showing wastewater treatment sludge generation for the Ultramar Wilmington

---

[1] This report provides a general description of a particular petroleum refinery, and then discusses the refinery's wastewater treatment system, generation of K048-K052, F037, and F038 wastes, and waste management practices. This report has been developed based on observations by EPA (with support from ICF Inc.), and has been supplemented by information provided by the refinery.

NOTICE
If the filmed image is less clear than this Notice it is due to the quality of the document being filmed.

CD2F 003

0 0 0 9

Refinery.

Non-process contacted wastewaters (containing only about 5-15 ppm oil and grease but having a high total solids content), including boiler blowdown, stripped sour water, cooling tower blowdown, and other streams, are treated in a DAF unit. The DAF float, K048, containing 5% solids, is sent to the MOSC (Mobil Oil Sludge Coking) unit.

Process contacted wastewaters, which are approximately 15-25% oil and 5-10% solids, pass through a treatment train which includes a diversion box, a parallel plate interceptor (PPI), IAF units, and tankage. The PPI generates a sludge which is sent to the MOSC process (approximately 10% solids). The oil layer is sent to the desalter/coker wastewater treatment train, and the water layer from the PPI is sent to an IAF unit. The IAF float, F037, is sent to the MOSC unit.

Treated water from both process contacted and non-contacted streams is delivered to an air flotation unit sump before being recycled as utility water or diverted to the forebay to the county sewer.

Desalter water, coker wastewater streams, and crude and slop tank drainage (which is not particularly "dirty"), go through a series of tanks before being centrifuged to break the oil/water/solids emulsion. Sludges from the centrifuge, an F038 waste containing about 20% solids, are sent to MOSC processing. Oil is recovered by means of a second PPI, and the water from this separation process is finally delivered to the previously mentioned diversion box that receives process contacted waters as . The PPI separator sludge, an F037 waste, is sent to the MOSC unit.

PETROLEUM REFINING WASTE GENERATION

Non-process contacted wastewater float generated in the DAF unit is generally about 5% solids. The parallel plate interceptor sludge (F037) from process contacted wastewaters is approximately 10% solids. Sludges from the centrifuge treating desalter water are about 20% solids. These floats and sludges generated in wastewater treatment are dewatered to 20% solids in a centrifuge before being fed to the MOSC process. Approximately 6 tons/week (312 tons/year) of sludge are sent to MOSC processing (222 CA waste). The MOSC can handle no more than 8% solids in the feed stream.

Air flotation units and tankage also generate some sludges. Ultramar does not have an estimate for the generation of these sludges.

Ultramar reports that all K wastes (DAF and IAF float, and oil/water/solids sludges) generated since 1988 and F wastes generated since 1989 are fed to the Mobil Oily Sludge Coking (MOSC) process. The MOSC process currently treats about 1,750 barrels per month of sludge, which is only about 50% of capacity.

In the past, the typical generation rate of wastewater treatment sludges totalled on average about 800 tons per year. In 1986, 301 tons of K048, 217 tons of K051, and 1194 tons of "oily sewer sludge" (now F037-F038) was generated. The high generation rate of sludge that year was due to a cleanout operation. In 1987, 723 tons of K048, 369 tons of K051, and 49 tons of "oily

NOTICE
If the filmed image is less clear than this Notice it is due to the quality of the document being filmed.

CD2F 003

0 0 0 0

sewer sludge" was generated. Generation of "oily sewer sludge" amounted to 46 tons in 1988.

F wastes generated from sewer cleanout are similar to the PPI separator sludge. Petroleum refining wastes generated at this facility contain no chromium or lead. However, because Ultramar uses hydrofluoric acid alkylation, some fluorine is present in the waste.

The diversion box is cleaned out as needed. Ultramar estimated that 1,500 barrels of sludge (F037) are generated from each cleanout.

WASTE MANAGEMENT PRACTICES

The facility accepts no offsite wastes. K, TC, and F wastes are all delivered to the MOSC process. Ultramar keeps the solids content of the MOSC feed at less than 8 percent. The coke produced contains no more than 0.5% ash. Junction boxes and sumps around refinery processes are cleaned out with a hydroblast vacuum truck and put into temporary storage and subsequently used in the cokers. If a volume of greater than 1000 barrels is generated, then a contractor with portable treatment capabilities (e.g., filter press, centrifuge) is called to treat the excess waste and send it off-site for disposal.

The IAF units tend to be more efficient than DAF units. Both types of units are cleaned out once or twice a year.

Ultramar commented that cement kilns in California (Labec systems designs was mentioned) appear to show interest only in liquid wastes.

NOTICE
If the filmed image is less clear than this Notice it is due to the quality of the document being filmed.

CD2F 003

0 8 9 1

NOTICE
If the filmed image is less clear than this Notice it is due to the quality of the document being filmed.

ULTRAMAR HAZARDOUS WASTE SUMMARY

		AFU FLOAT	API SLUDGE
			TOTAL 800 tons
K wastes	1986	301 tons	217 tons
	1987	723 tons	369 tons
	1988	-0-	-0-
	1989	-0-	-0-
	1990	-0-	-0-
"Oily Sewers" F037,F038	1986	1194 tons	
	1987	49 tons	
	1988	46 tons	TYPICAL GEN. 50 TONS/YR.
	1989	-0- NOSC	
	1990	-0- NOSC	

Mobil Oil Sludge Coking Process - 1,750 barrels per month.
NOT NEAR CAPACITY? 50% OF CAPACITY
ABOUT 500#/BARREL
HazWasSum - 1.5% ASH

50% SOLIDS CAKE BELOW 55% CAKE DRY TO TOUCH

CD2F 003

0 0 8 9 2

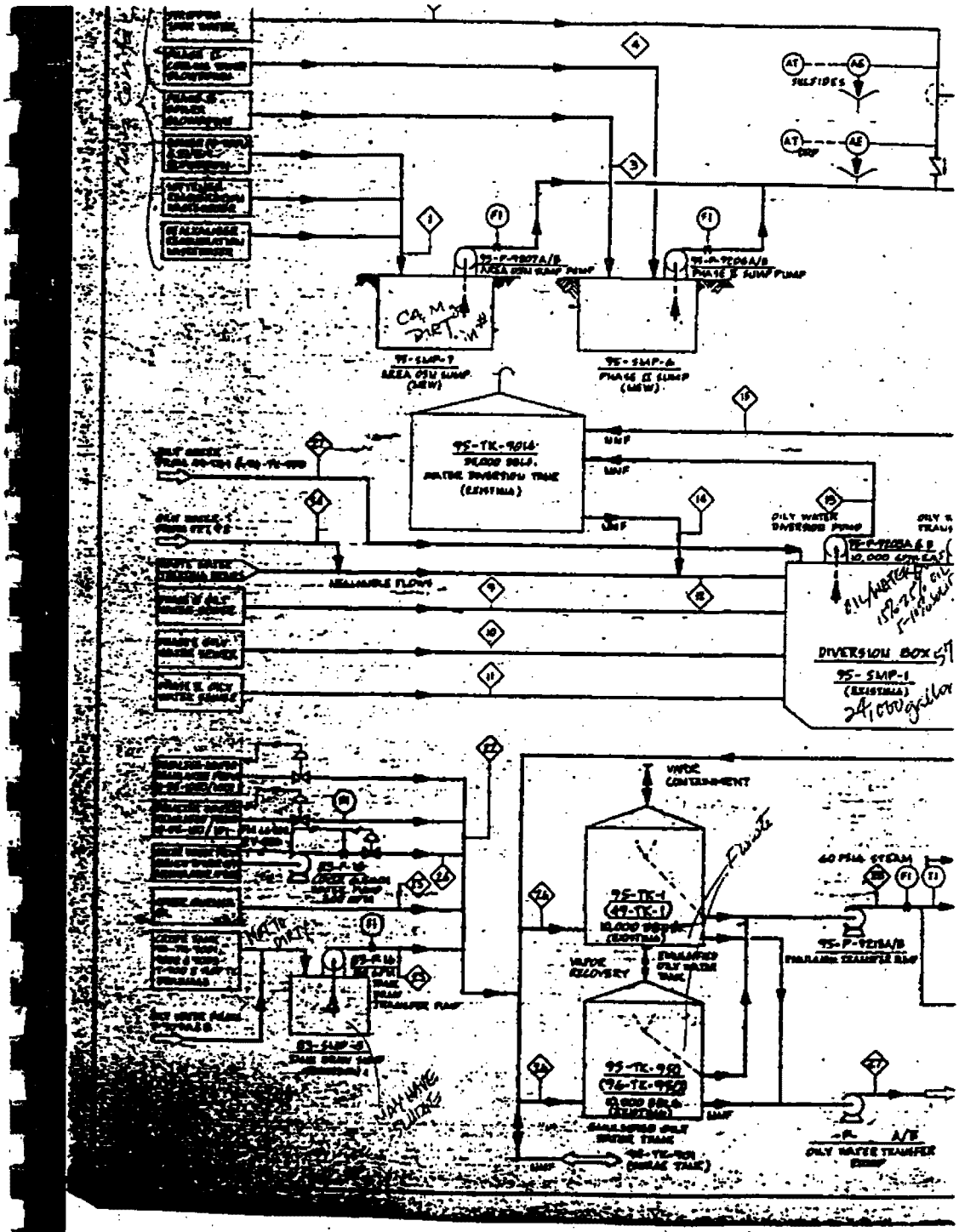

NOTICE
If the filmed image is less clear than this Notice it is due to the quality of the document being filmed.

CD2F 003

0893

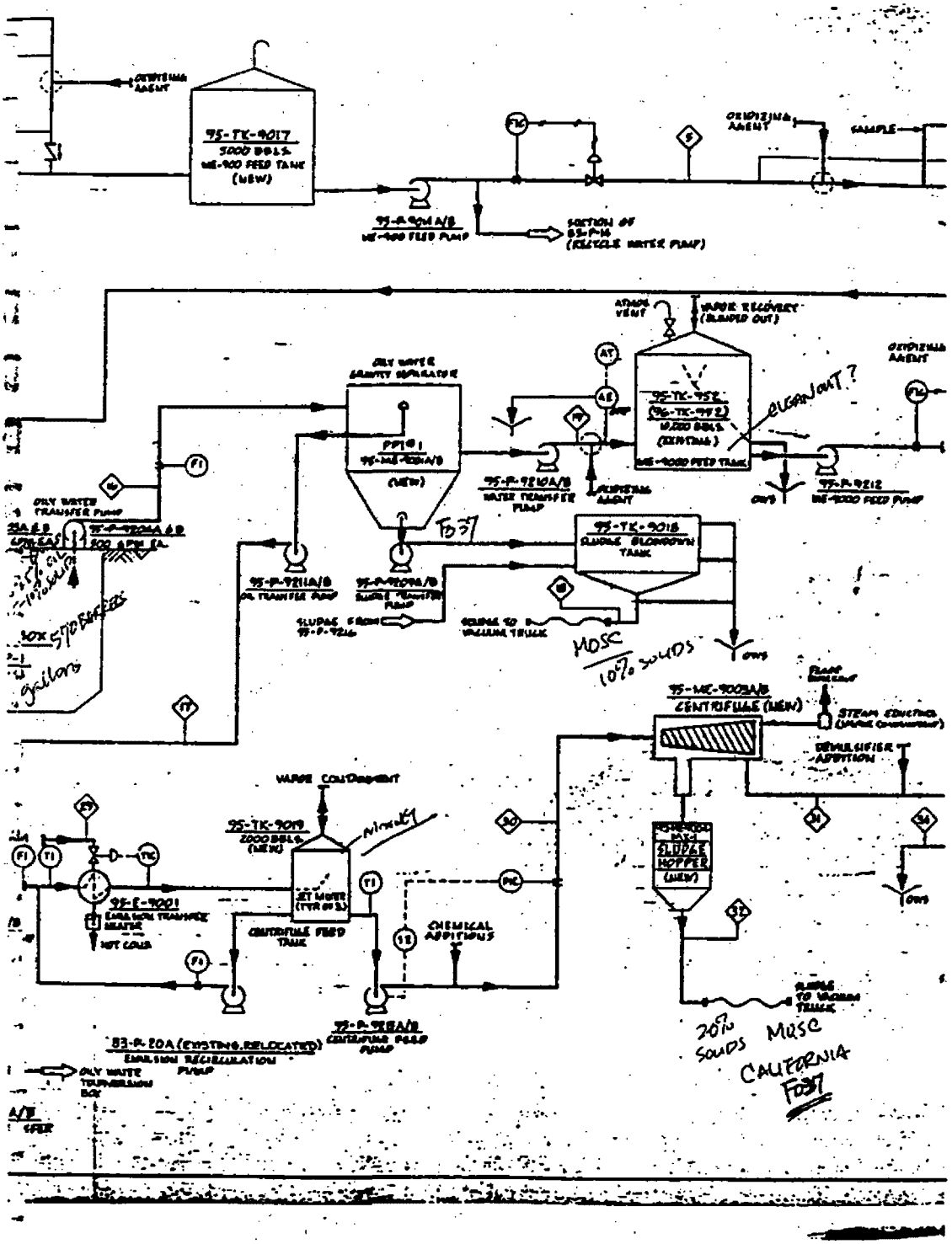

NOTICE
If the filmed image is less clear than this Notice it is due to the quality of the document being filmed.

CD2F 003

0894

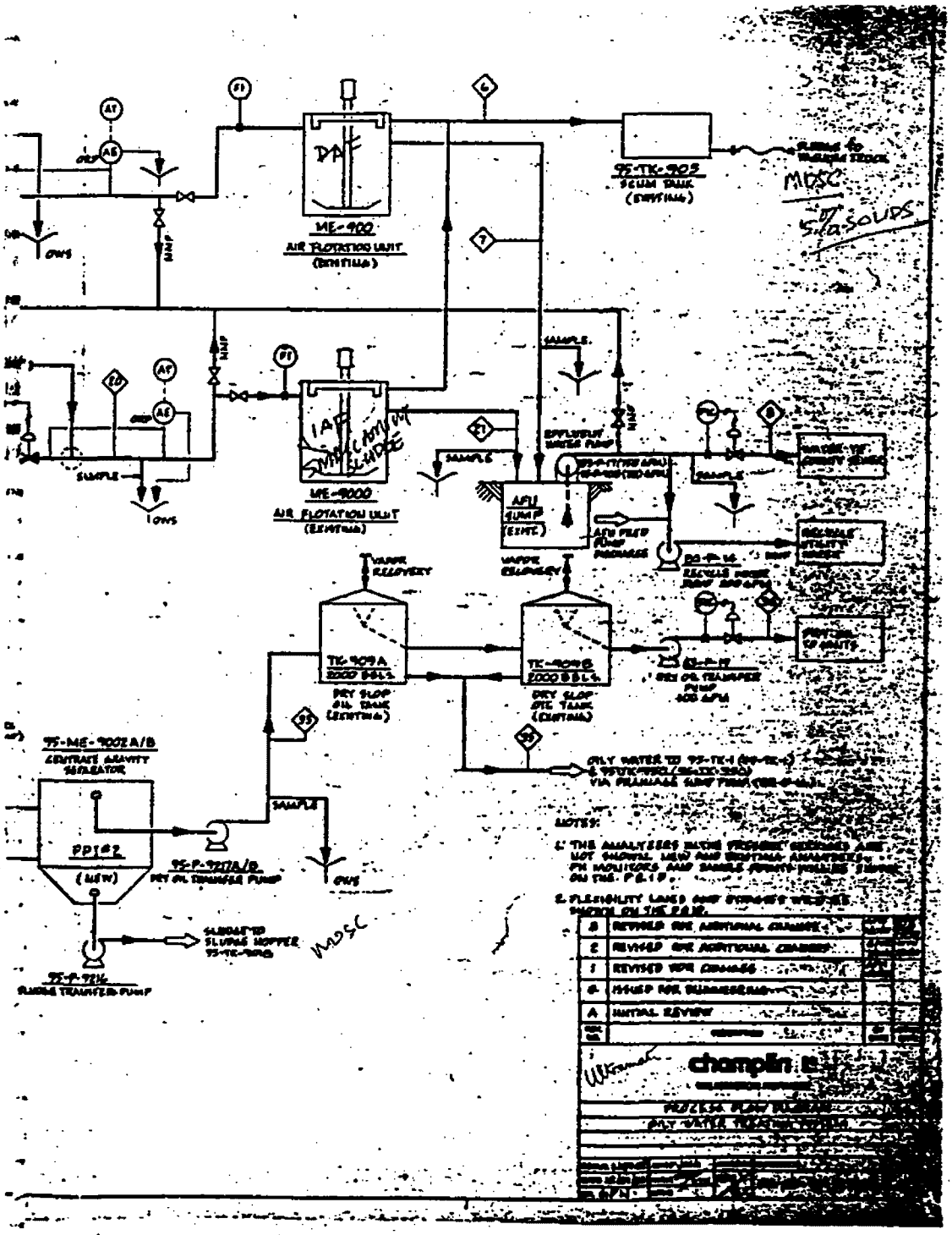

NOTICE
If the filmed image is less clear than this Notice it is due to the quality of the document being filmed.

CD2F 003

0895

F037 AND F038 WASTE CAPACITY ANALYSIS:
DATA USE AND TRACKING SHEET

Refinery: Amoco - Whiting Refinery
State: Indiana

Data sources available:

_x_ Petroleum refinery visits/voluntary submission

_x_ National Survey of Hazardous Waste Treatment, Storage, Disposal, and Recycling Facilities (TSDR survey)

__ National Survey of Hazardous Waste Generators

__ Biennial report/state reporting requirements

__ California hazardous waste data base

_x_ Petroleum refinery data base (PRDB)

__ No-migration petitions

Basis for F037 and F038 waste estimation:

EPA used data provided by Amoco (Whiting Refinery) because it was the most recent and the only source that describes F037 and F038 waste generation and management. Other sources were used only in comparison with the refinery's data submission.

F037 and F038 waste estimates:

F038 (routine) - 405 tons/year from a grit chamber used to remove solids from wastewater influent to the primary treatment.

Episodic F037 sludges are generated in two stormwater surge tanks (10.5 million gallons each). These tanks were installed a year ago and have never been cleaned out; therefore, the amount of F037 sludges generated is not known.

NOTICE
If the filmed image is less clear than this Notice it is due to the quality of the document being filmed.

CD2F 003

0896

TRIP REPORT[1]
AMOCO WHITING REFINERY VISIT (5/9/91)

Amoco Attendees: Dave Kalet
Julie Murphy
Robyn Stephens

EPA Attendees: Jo-Ann Bassi (OSW)
Bob Goeltz (ICF Inc.)
James Hsu (ICF Inc.)
Gary Light (ICF Inc.)

REFINERY DESCRIPTION

Amoco's Whiting refinery, built in the late 1880's, is an integrated facility (i.e., it produces gasoline, lube, coke, etc.) processing up to 350 thousand barrels of crude oil per day, drawing up to 160 million gallons of process water per day from Lake Michigan (mostly for noncontact cooling), and has a water outfall of 15 to 25 million gallons per day to the lake (and up to 100 million gallons when it rains). The refinery comprises a crude processing section, a refining and octane building section, and a wastewater treatment plant.

WASTEWATER TREATMENT SYSTEM

Exhibit 1 presents the wastewater treatment flow diagram at the Whiting refinery. In the refinery, process wastewaters (i.e., contact and noncontact waters) and stormwaters collect in a common sewer system that drains to the wastewater treatment plant.[2] Large pieces of oil-contaminated debris are removed from the wastewater by a bar screen as it enters the treatment plant. Next, a hydrocyclone grit chamber removes particulates (e.g., sand) remaining in the wastewater. The grit chamber sludge (F038) is currently sent off site for land disposal. Stormwaters exceeding the grit chamber and downstream API separators capacities are diverted to stormwater surge tanks for storage and subsequent treatment. Grit chamber water effluent enters API separators where oil, water, and solids undergo gravity separation. The oil is removed, placed

---

[1] This report provides a general description of a particular petroleum refinery, and then discusses the refinery's wastewater treatment system, generation of K048-K052, F037, and F038 wastes, and waste management practices. This report has been developed based on observations by EPA (with support from ICF Inc.), and has been supplemented by information provided by the refinery.

[2] The wastewater treatment plant also accepts ballast water, water bottoms from terminals, water from an underground cavern used to store propane, and wastewater from a nearby Amoco petrochemical plant.

NOTICE
If the filmed image is less clear than this Notice it is due to the quality of the document being filmed.

CD2F 003

0 8 9 7

in tanks, and eventually returned to crude processing. Solids form the API separator sludge (K051), which is removed from the separator by scrapers, sent to belt presses for dewatering, and treated in a fluidized-bed incinerator. Residues from incineration, still carrying the petroleum refining waste codes, are trucked off-site for stabilization before landfilling. The water phase from the API separator is discharged to stormwater surge tanks where it mixes with diverted stormwaters. Since oil and solids are part of diverted stormwaters, and are not completely removed from the API separator effluent water, gravity settling occurs in the stormwater surge tanks, and forms a sludge (which may be F037). Stormwater surge tanks drain to two-stage DAF units that use flocculants and dissolved air to form an oily DAF float (K048), which is skimmed off, mixed and dewatered with the API separator sludge, and treated in the incinerator. Wastewater from the DAF units is pumped to activated sludge units. The resulting water is then either used as fire water, or is sent to clarifiers and filters, and finally discharged to Lake Michigan via a NPDES permit or is used as cooling water. Activated sludge unit blowdown and filter backwash are pumped back to DAF units for oil removal. Amoco reports that the wastewater treatment system recovers approximately 500 barrels of oil per day.

PETROLEUM REFINING WASTE GENERATION

Amoco Whiting estimates generation of API separator sludge (K051) to be 1,800 gallons per day (2,700 tons per year), and DAF float (K048) to be 43,200 gallons per day (65,700 tons per year). Amoco indicates that the largest contributors to solids in K048 and K051 wastes are dirt washed into the sewers, and precipitation of hardness (calcium carbonate) resulting from caustic addition to sewer and activated sludge units. An on-site fluidized-bed incinerator treats K048 and K051 wastes and generates approximately 3,000 tons of incineration residues (scrubber solids) per year.

The grit chamber generates between 100 to 150 yards of F038 sludge per year (approximately 135 to 203 tons per year). This sludge has the appearance of dirty sand and will occasionally contain some asphalt. This sludge is currently trucked to an off-site landfill, but will likely be sent to off-site treatment (e.g., incineration) once the F037 and F038 LDR takes effect. Because of the LDR, Amoco will send oil/water separator sludges (F037), generated in the refinery from periodic cleanouts, to the grit chamber. Amoco estimates these cleanouts will increase the generation of grit chamber sludge to 300 yards per year (approximately 405 tons per year).

F037 sludges may be generated in the two stormwater surge tanks (10.5 million gallons each). These tanks were installed a year ago and have never been cleaned out; therefore, the amount of F037 sludges generated is not known.

NOTICE
If the filmed image is less clear than this Notice it is due to the quality of the document being filmed.

CD2F 003

0 0 9 8

WASTE MANAGEMENT PRACTICES

As seen Exhibit 2, K051 waste sludge from the API separator is pumped into a desludge holding tank where decant oil is recycled back to API separators. Thickened K051 sludge from the holding tank is mixed with K048 sludges (containing 7 percent solids) from the DAF unit, and pumped to belt presses for dewatering prior to treatment in the fluidized-bed incinerator. The resulting cake contains between 15 to 20 percent solids and has an average heating value of 3,000 Btu per pound. The filtrate undergoes oil/water separation to recycle oil back to API separators.

The fluidized-bed incinerator, rated at 82 Mbtu per hour, was operated on a two month on/two month off basis to burn belt press cake, spent caustic, and other liquid hazardous and nonhazardous wastes. Recently the incineration campaign has been extended to treat these wastes because difficulties in operating the incinerator's THC monitors has frequently caused the incinerator to trip off. Amoco does not expect to treat grit chamber sludge (F038) in the incinerator because solids in the sludge have shown to cause excessive wear in the incinerator feed system; therefore, the sludge will continue to be sent off-site for treatment and disposal. The incinerator has enough capacity to treat all wastes generated on site, but does not have additional capacity to treat off-site wastes. Exhibit 2 shows Whitings waste incineration system.

In case of a major incinerator failure, the need arises for waste treatment alternatives. Thus far Amoco Whiting has only considered sending petroleum refining wastes off site for incineration because other alternatives (i.e., sending wastes to cokers and cement kilns, and using solvent extraction) are not viable. Amoco cannot use refinery cokers to recycle petroleum refining wastes because the cokers are not located on site,[3] therefore the coking exemption does not apply. The use of petroleum refining waste as fuel for cement kilns is not viable because Amoco is concerned about the potential liability associated with waste residues in cement being interpreted as land placement constituting disposal. Amoco has not researched the potential of reducing K048-K052, F037, and F038 wastes by putting more load on activated sludge units because the current EPA position on scouring, and the recent correction to the primary sludge rule, replacing "treated" with "generated" suggests that the mixture rule would cause the biological sludge to become a listed hazardous waste. Amoco examined solvent extraction technologies (CF Systems and B.E.S.T), but does not consider solvent extraction versatile enough to handle all the different refinery wastes that vary in composition. Amoco has tasked its WasteTech subsidiary to develop and examine emerging technologies for treating or recycling petroleum refining wastes.

---

[3] The refinery actually has five different facility identification numbers. Cokers are located at a part of the refinery that has a different facility identification number than the wastewater treatment plant.

NOTICE
If the filmed image is less clear than this Notice it is due to the quality of the document being filmed.

CD2F 003

0899

In the last five years, the refinery has made significant modifications that impact the generation of petroleum refining wastes. In late 1989 and early 1990, Amoco installed the grit chamber, and was motivated by hazardous waste regulations to replace a surface impoundment with two stormwater surge tanks. The grit chamber project improved the operations of moving equipment in the API separators, reduced the production of hazardous waste API sludge, and extended the operating life of the incinerator feed delivery system by removing sand from the feed. The plant also reduced the amount of precipitate in the wastewater, which ends up in sludges, by controlling the mixing of caustic into sewers and activated sludge units so that wastewater pH does go above 9. Amoco's refinery modifications and good housekeeping practices combine to reduce previous generation of API separator sludge wastes by 33 percent.

Amoco Whiting is investigating the replacement of API separators and DAF units with comparable above ground equipment (i.e., plate interceptors). Though API separators and DAF units are considered tanks, Amoco is concerned that, if the tank exemption no longer applies, it may be impractical to prove that they are not leaking and releasing hazardous waste. A secondary DAF unit, dedicated for activated sludge unit blowdown, is also being engineered. Further projects under consideration are segregating the sewer system at a estimated cost of $140 million.

NOTICE
If the filmed image is less clear than this Notice it is due to the quality of the document being filmed.

CD2F 003

0 9 0 0

EXHIBIT 1

Amoco Oil Company Whiting Refinery Wastewater Treatment Plant Water Flows

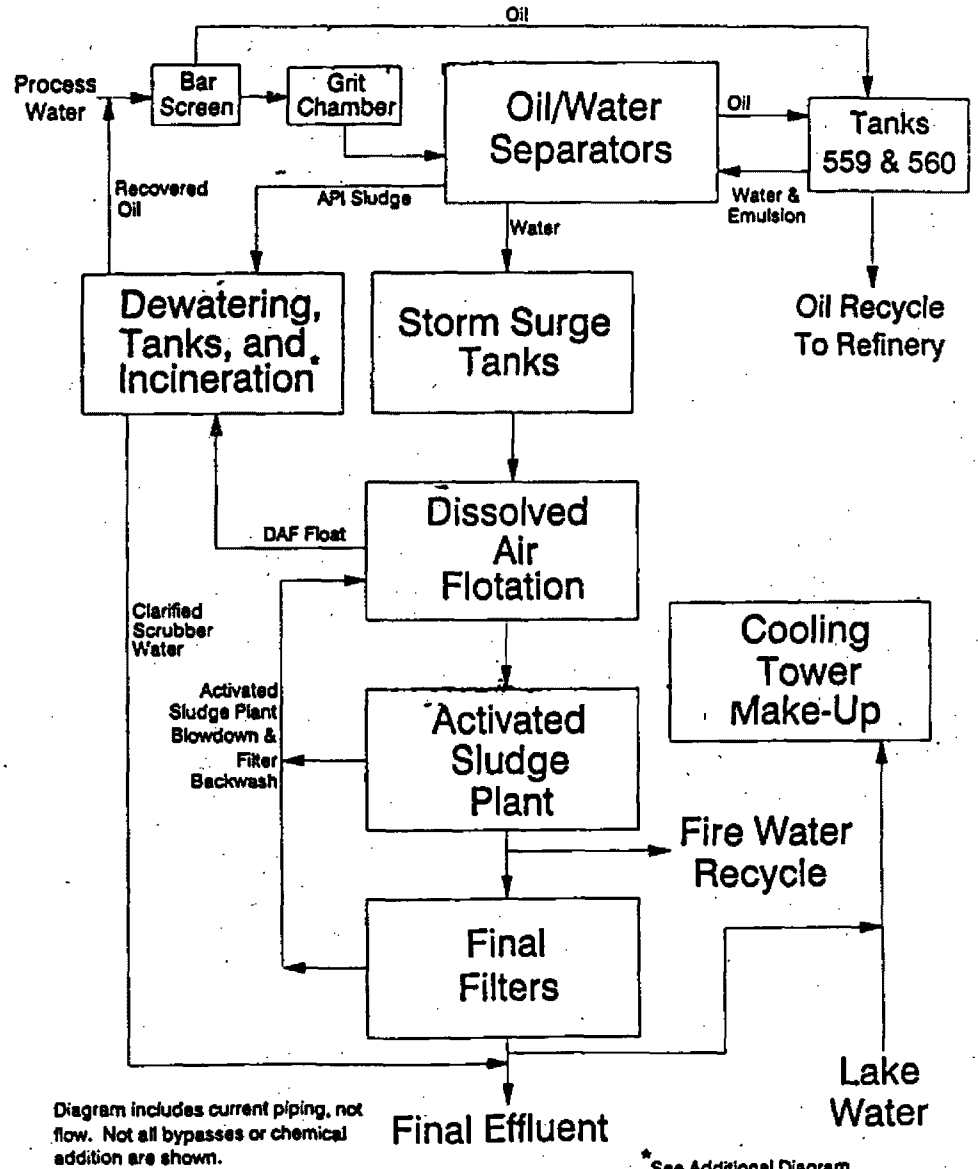

Diagram includes current piping, not flow. Not all bypasses or chemical addition are shown.

RBS 8/10/90

*See Additional Diagram, "Dewatering, Tanks and Incineration"

NOTICE
If the filmed image is less clear than this Notice it is due to the quality of the document being filmed.

CD2F 003

0 9 0 1

Dewatering, Tanks, and Incineration
Amoco Oil Company Whiting Refinery
Wastewater Treatment Plant

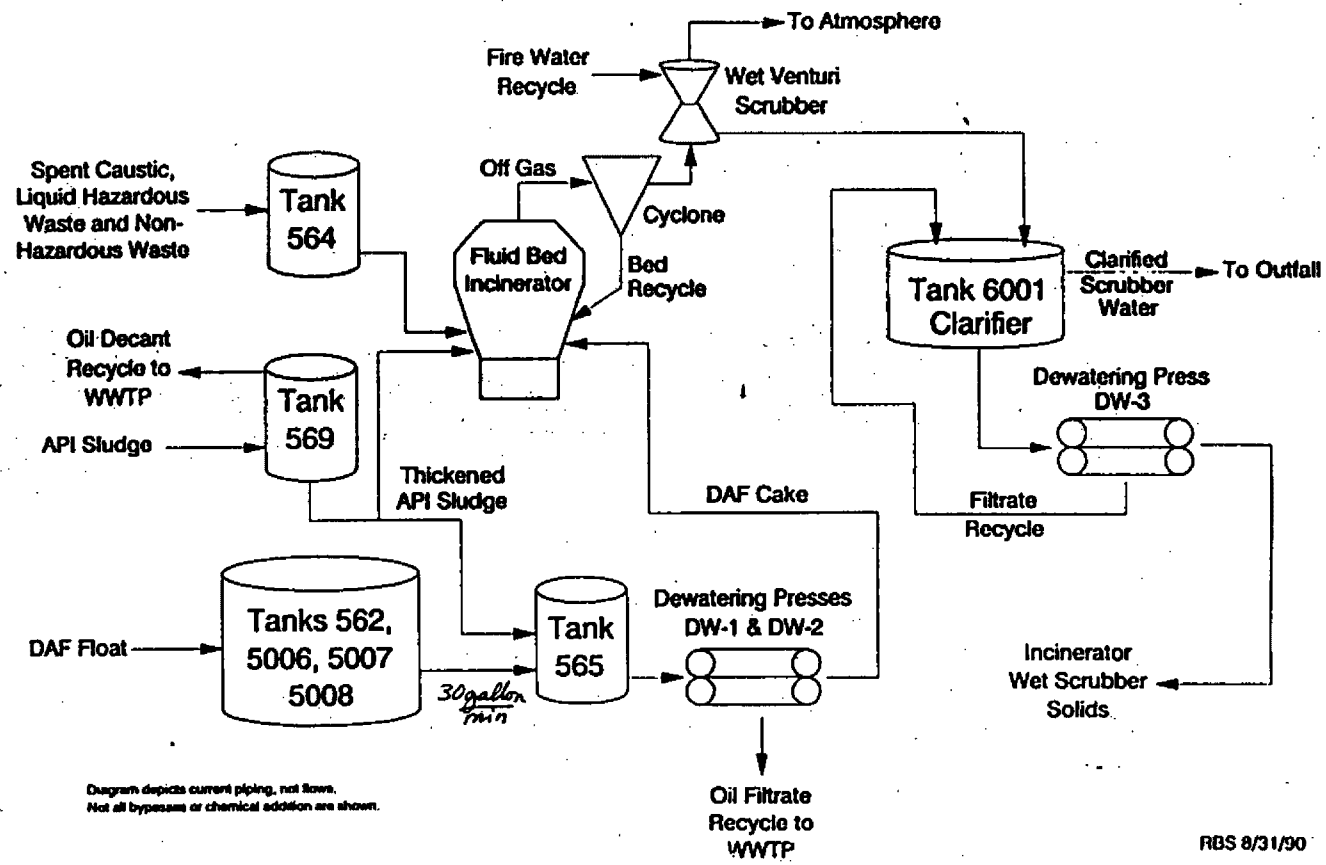

Diagram depicts current piping, not flows.
Not all bypasses or chemical addition are shown.

RBS 8/31/90

EXHIBIT 2

NOTICE
If the filmed image is less clear than this Notice it is due to the quality of the document being filmed.

CD2F 003

2060

Answers to Refinery Question Concerning F, TC, and K Wastes
USEPA/ICF Visit - May 9, 1991
Amoco Oil Company - Whiting, Indiana

NOTICE
If the filmed image is less clear than this Notice it is due to the quality of the document being filmed.

CD2F 003

0 9 0 3

Wastewater Treatment Facility

What is your current configuration?
See attached process flow diagram

How segregated is your system, stormwater vs. process water?
The only segregated stormwater system in the refinery exists in a large tankfield and undeveloped area at the extreme southwest section of the property. These stormwater outfalls are separate from the process water and non-contact cooling water outfalls. All refinery stormwater and most tankfield stormwater is collected and treated via the process sewer.

What modifications have been made during the last 5 years?
The grit chamber was put into service in early 1990. The stormwater surge tanks were put into service in late 1989, replacing a surface impoundment. An inground tank, No. 5 Separator, which stored API separator sludge, was closed. The API separators are now directly desludged into 569 tank. Sludge from 569 tank is now mixed with DAF float and dewatered/deoiled before incineration.

What were the driving forces behind these modifications?
The grit chamber project was implemented to (1) improve the operating factor of moving equipment in the API separators, (2) reduce the production of hazardous waste API sludge, (3) remove sand from incinerator feed, and (4) allow for the direct removal of API sludge to 569 tank as required with the closure of No. 5 Separator.

The stormwater surge tanks project was implemented to replace the surface impoundment and improve the environmental condition of the facility.

No. 5. Separator was closed because it was impractical to install secondary containment.

What future modifications are planned?

We are investigating the replacement of the API separators and the DAF unit with comparable above ground equipment. Though these devices are recognized as WWTP tanks, there is concern that it may be impractical to prove they are not leaking, releasing hazardous waste. A second, separate DAF unit, dedicated for activated sludge plant blowdown, is also being engineered. Modifications to the activated sludge plant's caustic injection system is also being pursued.

What are the driving forces behind these modifications?

We feel that the WWTP tank exemption may not exist for very long. The Benzene NESHAP for wastewaters is also a driving force. The caustic injection project should reduce hardness precipitation, DAF float production, and incinerator solids which end up as incinerator scrubber solids

How have the K, TC and F rulings and land bans affected the facility in terms of modifications, operation, capacity?

The new K and TC regulations required modification the RCRA permit to include these waste codes. Grit from the grit chamber will now be disposed of as hazardous waste. Though there is conflicting TCLP data on the nickel content, the scrubber solids from the incinerator are stabilized off site prior to disposal.

K and TC Wastes

What is your estimated rate of generation and land disposal of K and TC wastes?

Since September, 1990, approximately 200 cubic yards of new D018 sludges have been land disposed. Most of this has been from the cleaning of a crude tank and some has been from hydrocarbon spills. K wastes are produced at about 30 GPM year round. Disposal of FBI residual solids vary from 1700 to 3000 cubic years.

How do you currently treat, recycle or dispose of these wastes and are there any foreseeable changes in the treatment, recycling or disposal?

D018 sludges are now stored in roll of boxes. Free liquids are

NOTICE
If the filmed image is less clear than this Notice it is due to the quality of the document being filmed.

CD2F 003

0 9 0 4

removed in an attempt to deoil and remove benzene. This is not always successful, depending on the sludge matrix. This practice may be jeopardized under the upcoming Benzene NESHAP. Amoco Oil Company is currently investigating new technologies to better ensure hydrocarbon recovery and recycling. K wastes are stored, pressed to remove oil/water and treated in the incinerator. Changes in treatment will reflect changes in incinerator regulations. They could vary from different stack gas treatments or replacement of incineration with another process.

How have the waste generation rates changed with the hazardous waste ruling and land ban?

The TC rule has increased the amount of wastes which are hazardous. The land ban regulations have not affected K waste production. Production of scrubber solids has reduced steadily over the last few years because of improvements in caustic addition to the sewer and activated sludge plant. However, DAF production has remained relatively constant, not significantly affecting incinerator run time. API sludge generation has also been reduced, but this is due to the grit chamber which now produces primary sludge. TC waste production is expected to increase with Benzene NESHAP.

Have there been any upstream or waste water treatment facility operating changes to reduce the amount of these wastes generated?

The refinery has continued its training and education of operators to pay attention to housekeeping practices, closer control on caustic recycling, reduction of sand losses to the sewer, attention for hydrocarbon leaks, and quick maintenance on leaks.

Will the new F waste land ban affect the amount of these wastes produced?

No, as steps to minimize primary sludge production have already been implemented.

How much of these wastes are stockpiled in containers or surface impoundments?

No wastes are stockpiled in containers or surface impoundments. Some TC wastes and grit chamber solids are stored for 90 days at the

NOTICE
If the filmed image is less clear than this Notice it is due to the quality of the document being filmed.

CD2F 003

0 9 0 5

Lakefront or the refinery awaiting disposal. Some samples may also be found in the permitted hazardous waste storage building at the Lakefront. K wastes are routinely stored in permitted tanks prior to treatment.

How will these characteristics change with any planned facility modifications and operating changes?

Implementation of hydrocarbon recovery and recycling technologies for sludges should reduce the D018 production from tank cleanings and hydrocarbon spills. However, technology limitations may not allow for hydrocarbon recovery of all D018 wastes.

Are any of your secondary treatment waste, such as sludge from the aggressive biological units, categorized as TC wastes?

Testing to date indicates no.

F Waste

Is there a current estimate of the amount of F wastes generated?

Generation is expected to be between 150 - 300 yards per year.

Is there an estimate of F wastes stockpiled in containers or surface impoundments?

No F wastes are stockpiled in containers or surface impoundments.

What are you currently doing with the stockpiled waste and what are your future plans?

There are no stockpiled F wastes. If we generate F wastes in the refinery, they will be transported to the Lakefront for treatment in the Grit Chamber.

What are the chemical and physical characteristics of both the currently generated and the stockpiled wastes?

Grit from the grit chamber appears as dirty sand. It occasionally will contain some asphalt. Tests show it does not exhibit a hazardous characteristic. It has not been compared to levels found in EPA's data used to make the F listings, but is believed to be lower in concentration of constituents of concern because it is so dissimilar to

NOTICE
If the filmed image is less clear than this Notice it is due to the quality of the document being filmed.

CD2F 003

0 9 0 6

API sludge and DAF float.

What is your current treatment, recycle or disposal method and how will this change with the land ban?

Grit and primary sludge will be land disposed. When a primary sludge land ban is created, the grit will most probably be taken off site for treatment, if necessary. The incentives to modify the incinerator or install other treatment technologies for such a small stream are not sufficient to support such projects.

What are the capacities of these treatment, recycle and disposal methods in relationship to F wastes?

The treatment capacity of the incinerator for F waste is zero. The off site capacity is not known.

Are there any planned changes, other physical or operational, to deal with the land band and how will these changes affect K generation?

No changes are planned. Affects to K waste generation are not expected.

Is it possible to reduce F or K wastes by putting more of a load on the aggressive biological units?

This has not been researched from a technical standpoint. However, the current EPA position on scouring, and the recent correction to the primary sludge rule, replacing "treated" with "generated" would indicate that the mixture rule would cause the biological sludge to become listed hazardous waste.

General

What are your offsite treatment options and are there unique features of your waste that would limit the treatability options?

In case the need arises for offsite treatment, such as from a major incinerator failure, off site treatment would be incineration. Pumpability and BTU value would limit treatment throughput. Availability of haulers, trucks and containers would also be questionable.

NOTICE
If the filmed image is less clear than this Notice it is due to the quality of the document being filmed.

CD2F 003

0 9 0 7

What modifications have been done or are planned upstream to reduce the amount of waste generated in the wastewater treatment facility (eg. pretreatment, source control, segregation, etc.)?

Items which have been previously mentioned include reducing solids loss to the sewer and improving caustic addition to the activated sludge plant. Reducing oil and water losses are an ongoing effort. Future projects under consideration are segregating the sewer system.

Will the BIF rulings affect any of the current disposal options, onsite, captive or commercial?

The BIF rule alone is not expected to change any current operations. However, it along with any new rulings on used motor oil could affect its recycling in the Whiting Refinery.

Is there a preference on producing F wastes or K wastes in terms of handling or disposal?

The Whiting Refinery has no onsite treatment capabilities currently for F wastes. If a landban standard is adopted, it may require off site treatment. Systems are in place for K wastes currently, but are difficult to operate.

What is the frequency of cleanout for various wastewater treatment units?

API separators are desludged continuously. Shutdown and inspection of separators and the DAF occur as necessary. Separators are usually done yearly and DAF units when sludge deposits interfere with operation. Tanks are emptied every incinerator run.

NOTICE
If the filmed image is less clear than this Notice it is due to the quality of the document being filmed.

CD2F 003

0 9 0 0 8

Amoco Oil Company Whiting Refinery
Wastewater Treatment Plant Water Flows

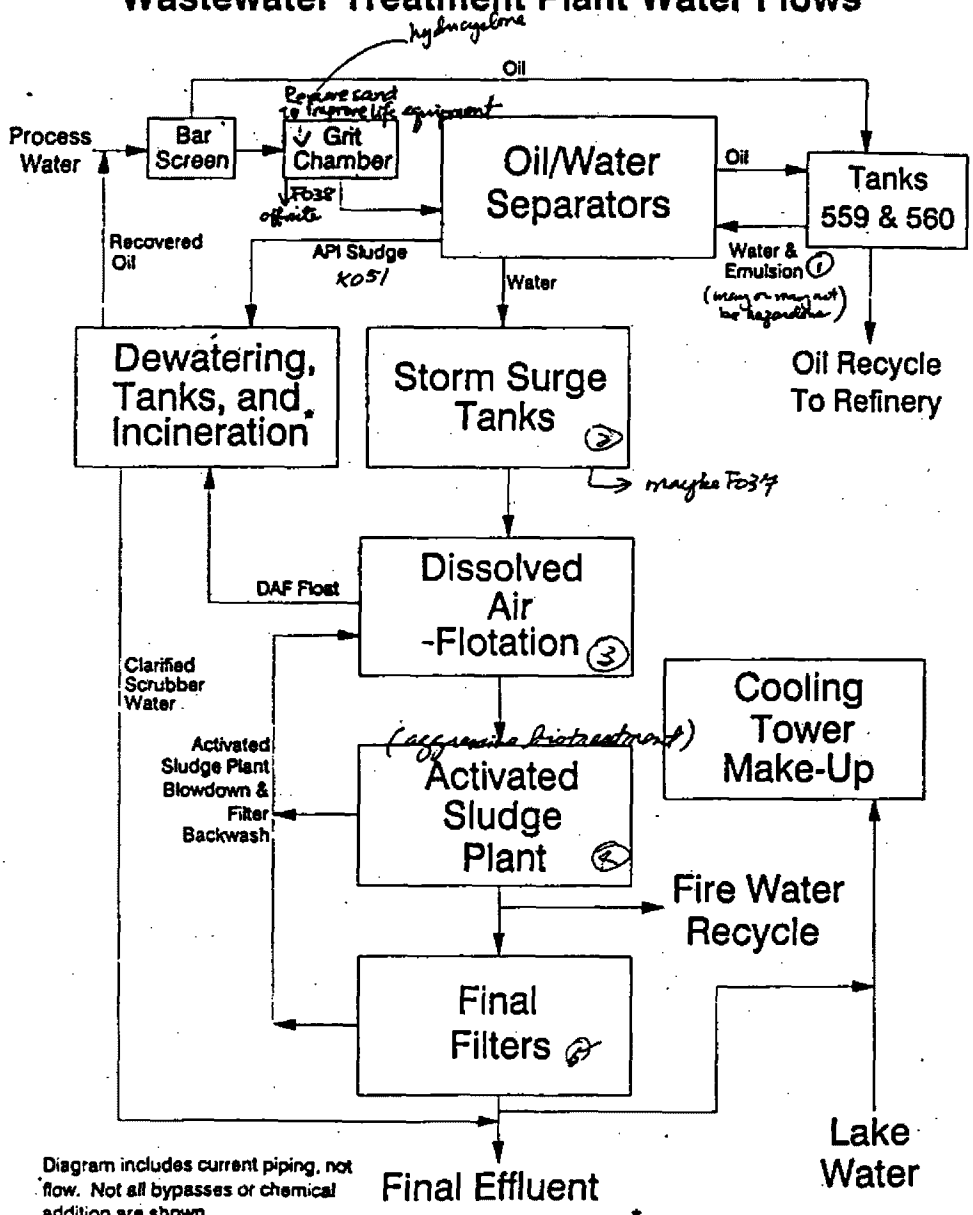

Diagram includes current piping, not flow. Not all bypasses or chemical addition are shown.

RBS 8/10/90

*See Additional Diagram, "Dewatering, Tanks and Incineration"

NOTICE
If the filmed image is less clear than this Notice it is due to the quality of the document being filmed.

CD2F 003

0 9 0 0

Dewatering, Tanks, and Incineration
Amoco Oil Company Whiting Refinery
Wastewater Treatment Plant

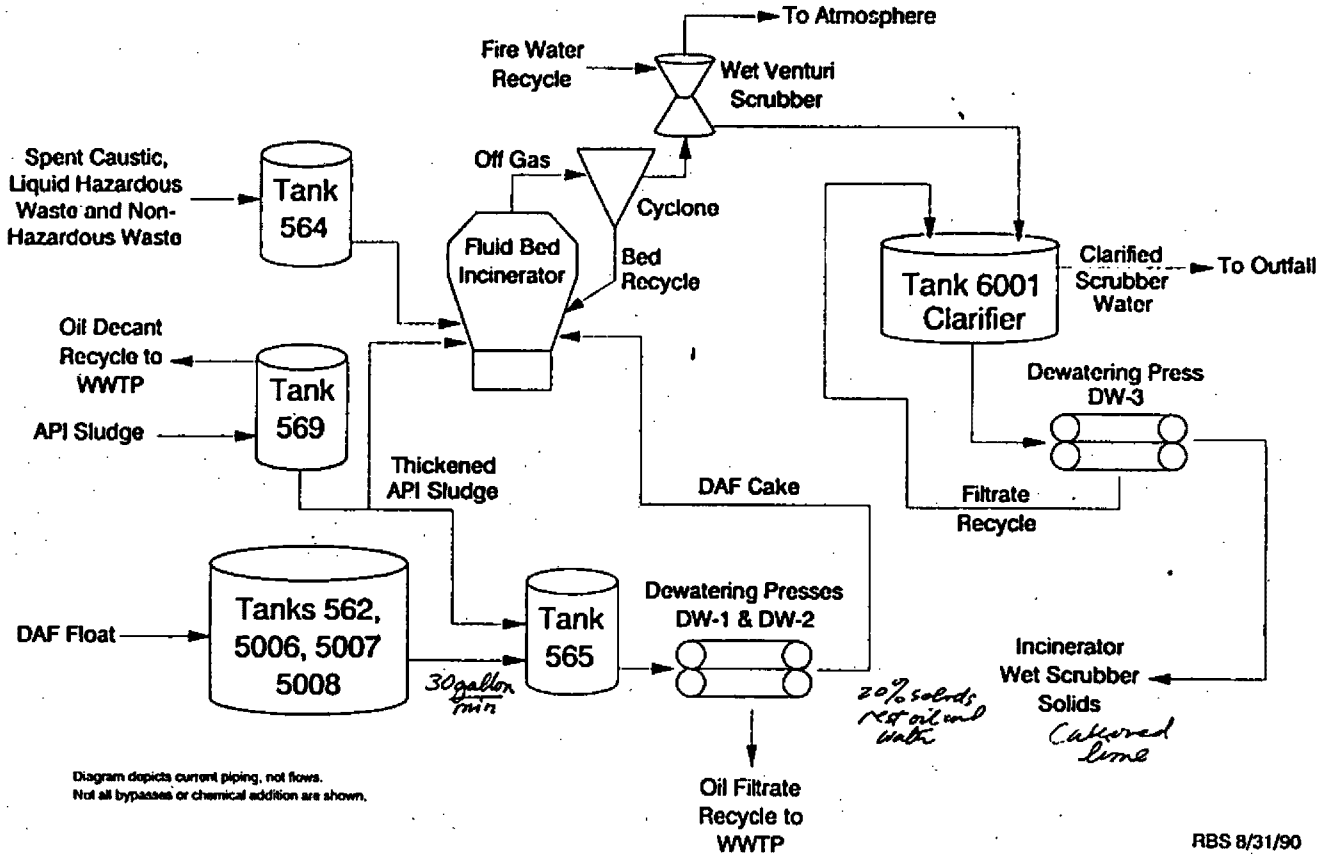

NOTICE
If the filmed image is less clear than this Notice it is due to the quality of the document being filmed.

CD2F 003

0160

Metals Feed Rate Calculations

DAF	1989 DEC	1990 JAN	1990 FEB	1990 MARCH	1990 APR	1990 MAY	1990 JUNE	1990 JULY	1990 AUG	1990 SEP	1990 OCT	1990 NOV	1990 DEC	1991 JAN	1991 APR	DAF AVG
Antimony	0.75	1.00	5.00	5.00	5.00	5.00	5.00	5.00	5.00	5.00	5.00	5.00	5.00	5.00	5.00	4.45
Barium	16.5	2.00	3.33	15.00	6.67	12.00	8.50	15.50	19.00	24.00	10.00	10.00	27.00	21.50	15.00	13.73
Lead	29.5	1.67	22.00	20.50	25.50	15.00	9.30	33.00	39.00	39.00	170.00	190.00	46.00	72.50	25.00	49.20
Mercury	0.155	0.03	0.15	0.03	0.16	0.11	0.03	0.10	0.13	0.09	0.13	0.10	0.18	0.06	0.03	0.10
Silver	0.25	1.67	1.00	1.00	1.00	1.00	1.00	1.00	1.00	1.00	1.00	1.00	1.00	1.00	1.00	0.99
Thallium	13	16.67	5.00	5.00	5.00	5.00	5.00	5.00	5.00	5.00	5.00	5.00	5.00	5.00	5.00	6.31
Arsenic	1.75	0.17	1.20	1.30	1.70	1.10	1.00	1.65	1.00	1.10	0.97	1.45	1.65	1.70	1.30	1.27
Beryllium	0.13	0.17	0.50	0.50	0.50	0.50	0.50	0.50	0.50	0.50	0.50	0.50	0.50	0.50	0.50	0.45
Cadmium	0.13	0.17	0.50	0.50	0.50	0.50	0.50	0.50	0.50	0.50	0.50	0.50	0.50	0.50	0.50	0.45
Chromium	19.5	2.00	11.00	6.15	8.15	7.00	3.80	17.50	18.00	14.00	11.00	15.00	22.00	13.50	11.00	11.97

API	DEC 1989	JAN	FEB	MARCH	APR	MAY	JUNE	JULY	AUG	SEP	OCT	NOV	DEC	JAN	APR	API AVG
Antimony	1.5	6	5.00	3.33	5.00	5.00	5.00	5.00	5.00	5.00	5.00	5.00	5.00	5.00	5.00	4.72
Barium	70	140	10.00	20.00	10.00	5.00	74.00	10.00	34.00	15.00	53.00	10.00	7.50	130.00	46.50	42.33
Lead	250	340	120.00	45.00	110.00	5.25	120.00	12.00	95.50	44.00	200.00	120.00	310.00	380.00	375.00	168.45
Mercury	0.99	0.03	0.65	0.29	0.43	0.18	0.74	1.10	0.55	0.36	0.61	0.35	1.20	1.90	1.08	0.70
Silver	0.25	0.33	1.00	0.67	1.00	1.00	1.00	1.00	1.00	1.00	1.00	1.00	1.00	1.00	1.00	0.88
Thallium	26	16.67	5.00	3.33	5.00	5.00	5.00	5.00	5.00	5.00	5.00	5.00	5.00	5.00	5.00	7.07
Arsenic	4.5	3.8	3.00	1.70	3.00	0.17	2.60	0.17	1.65	1.06	2.30	2.90	3.80	4.40	4.20	2.62
Beryllium	0.3	0.8	0.50	0.33	0.50	0.50	0.50	0.50	0.50	0.50	0.50	0.50	0.50	0.50	0.50	0.50
Cadmium	0.4	0.167	0.50	0.33	0.50	0.50	0.50	0.50	0.50	0.50	0.50	0.50	1.00	0.75	1.00	0.54
Chromium	140	220	150.00	17.00	79.00	1.80	94.00	15.00	50.00	16.50	47.00	36.00	530.00	530.00	610.00	169.09

CAUSTIC	DEC 1989	JAN	FEB	MARCH	APR	MAY	JUNE	JULY	AUG	SEP	OCT	NOV	DEC	JAN	APR	CAUSTIC AVG
Antimony	0.75	1	5.00	5.00	5.00	5.00	5.00	5.00	5.00	5.00	5.00	5.00	5.00	5.00	5.00	4.45
Barium	0.5	0.33	5.00	5.00	5.00	5.00	5.00	5.00	5.00	5.00	5.00	5.00	5.00	5.00	5.00	4.39
Lead	1.3	1.67	5.00	5.00	5.00	5.00	5.00	5.00	5.00	5.00	5.00	5.00	5.00	5.00	5.00	4.53
Mercury	0.03	0.03	0.03	0.03	0.03	0.01	0.08	0.01	0.01	0.08	0.01	0.01	0.00	0.00	0.03	0.02
Silver	0.25	0.33	1.00	1.00	1.00	1.00	1.00	1.00	1.00	1.00	1.00	1.00	1.00	1.00	1.00	0.91
Thallium	13	16.67	5.00	5.00	5.00	5.00	5.00	5.00	5.00	5.00	5.00	5.00	5.00	5.00	5.00	6.31
Arsenic	0.17	0.17	0.17	0.17	0.17	0.17	0.33	0.17	0.17	0.17	0.17	0.17	0.17	0.17	0.17	0.18
Beryllium	0.13	0.17	0.50	0.50	0.50	0.50	0.50	0.50	0.50	0.50	0.50	0.50	0.50	0.50	0.50	0.45
Cadmium	0.13	0.17	0.50	0.50	0.50	0.50	0.50	0.50	0.50	0.50	0.50	0.50	0.50	0.50	0.50	0.45
Chromium	15	8	5.75	1.30	1.30	1.80	1.30	1.30	1.30	1.30	1.30	1.30	1.30	1.30	1.30	2.99

NOTICE
If the filmed image is less clear than this Notice it is due to the quality of the document being filmed.

CD2F 003

0 9 1 1 1

April 1991 Samples

	DAF (mg/kg)	API (mg/kg)	CAUSTIC (mg/kg)	DAF (lb/hr)	API (lb/hr)	CAUSTIC (lb/hr)	total (lb/hr)	limit (lb/hr)
				110	20	10		
Antimony	4.45	4.72	4.45	0.22	0.05	0.02	0.29	1.5
Barium	13.73	42.33	4.39	0.68	0.42	0.02	1.12	1609
Lead	49.20	168.45	4.53	2.43	1.68	0.02	4.14	4.2
Mercury	0.10	0.70	0.02	0.00	0.01	0.00	0.01	8
Silver	0.99	0.88	0.91	0.05	0.01	0.00	0.06	95
Thallium	6.31	7.07	6.31	0.31	0.07	0.03	0.41	1.4

	DAF (mg/kg)	API (mg/kg)	CAUSTIC (mg/kg)	DAF (gm/sec)	API (gm/sec)	CAUSTIC (gm/sec)	total (gm/sec)	PERCENT ESCAPE	UNIT RISK	CUM RISK
Arsenic	1.27	2.62	0.18	0.00792	0.00330	0.00011	0.011329	0.06	0.0043	0.007248
Beryllium	0.45	0.50	0.45	0.00283	0.00062	0.00029	0.003737	0.09	0.0024	0.002002
Cadmium	0.45	0.54	0.45	0.00283	0.00068	0.00029	0.003798	1.35	0.0018	0.022888
Chromium	11.97	169.09	2.99	0.07471	0.21315	0.00188	0.289750	0.06	0.012	0.517377
								SUM		0.549517

NOTICE
If the filmed image is less clear than this Notice it is due to the quality of the document being filmed.

CD2F 003

0 9 1 2

Date of Calculation: January 28, 1991
JANUARY 1990 SAMPLES
Metals Feed Rate Calculations

	DAF (mg/kg)	DAF DL	DAF dilution	CALC DAF (mg/kg)	API (mg/kg)	API DL	API dilution	CALC API (mg/kg)	564 mg/kg	564 DL	564 dilution	CALC 564 (mg/kg)	564 mg/kg	564 DL	564 ilutio	CALC 564 (mg/kg)	CALC AVG (mg/kg)
Antimony	0	3	100	1.00	0	30	1000	6.00	0	3	100	1.00	0	3	100	1.00	1.00
Barium	2	1	100	2.00	140	1	100	140.00	0	1	100	0.33	0	1	100	0.33	0.33
Lead	0	5	100	1.67	340	5	100	340.00	0	5	100	1.67	0	5	100	1.67	1.67
Mercury	0	0.13	250	0.03	0	0.13	250	0.03	0	0.13	250	0.03	0	0.13	250	0.03	0.03
Silver	0	1	100	0.33	0	1	100	0.33	0	1	100	0.33	0	1	100	0.33	0.33
Thallium	0	50	100	16.67	0	50	100	16.67	0	50	100	16.67	0	50	100	16.67	16.67
Arsenic	0	0.5	100	0.17	3.8	2	400	3.80	0	0.5	100	0.17	0	0.5	100	0.17	0.17
Beryllium	0	0.5	100	0.17	0.8	0.5	100	0.80	0	0.5	100	0.17	0	0.5	100	0.17	0.17
Cadmium	0	0.5	100	0.17	0	0.5	100	0.17	0	0.5	100	0.17	0	0.5	100	0.17	0.17
Chromium	2	1	100	2.00	220	1	100	220.00	8	1	100	8.00	8	1	100	8.00	8.00

February 1990 Samples
Metals Feed Rate Calculations

	DAF (mg/kg)	DAF DL	DAF dilution	CALC DAF (mg/kg)	API (mg/kg)	API DL	API dilution	CALC API (mg/kg)	564 mg/kg	564 DL	564 dilution	CALC 564 (mg/kg)	564 mg/kg	564 DL	564 ilutio	CALC 564 (mg/kg)	CALC AVG (mg/kg)
Antimony	0	5	25	5.00	0	5	25	5.00	0	5	25	5.00	0	5	25	5.00	5.00
Barium	0	10	50	3.33	0	50	250	10.00	0	5	25	5.00	0	5	25	5.00	5.00
Lead	22	5	25	22.00	120	5	25	120.00	0	5	25	5.00	0	5	25	5.00	5.00
Mercury	0.15	0.13	250	0.15	0.65	0.5	1000	0.65	0	0.13	250	0.03	0	0.13	250	0.03	0.03
Silver	0	1	25	1.00	0	1	25	1.00	0	1	25	1.00	0	1	25	1.00	1.00
Thallium	0	5	25	5.00	0	5	25	5.00	0	5	25	5.00	0	5	25	5.00	5.00
Arsenic	1.2	0.5	100	1.20	3	0.5	100	3.00	0	0.5	100	0.17	0	0.5	100	0.17	0.17
Beryllium	0	0.5	25	0.50	0	0.5	25	0.50	0	0.5	25	0.50	0	0.5	25	0.50	0.50
Cadmium	0	0.5	25	0.50	0	0.5	25	0.50	0	0.5	25	0.50	0	0.5	25	0.50	0.50
Chromium	11	1.3	25	11.00	150	2.5	50	150.00	4	1.3	25	4.00	7.5	1.3	25	7.50	5.75

NOTICE
If the filmed image is less clear than this Notice it is due to the quality of the document being filmed.

CD2F 003

0 9 1 3

March 1990 Samples
Metals Feed Rate Calculations

	DAF (mg/kg)	DAF DL	DAF dilution	CALC DAF (mg/kg)	API (mg/kg)	API DL	API dilution	CALC API (mg/kg)	564 mg/kg	564 DL	564 dilution	CALC 564 (mg/kg)	dup DAF mg/kg	DAF DL	DAF ilutio	CALC DAF (mg/kg)	CALC AVG (mg/kg)
Antimony	0	5	25	5.00	0	10	50	3.33	0	5	25	5.00	0	5	25	5.00	5.00
Barium	16	10	50	16.00	0	100	500	20.00	0	5	25	5.00	14	10	50	14.00	15.00
Lead	20	5	25	20.00	45	5	25	45.00	0	5	25	5.00	21	5	25	21.00	20.50
Mercury	0	0.13	250	0.03	0.29	0.5	1000	0.29	0	0.13	250	0.03	0	0.13	250	0.03	0.03
Silver	0	1	25	1.00	0	2	50	0.67	0	1	25	1.00	0	1	25	1.00	1.00
Thallium	0	5	25	5.00	0	10	50	3.33	0	5	25	5.00	0	5	25	5.00	5.00
Arsenic	1.3	0.5	100	1.30	1.7	0.5	100	1.70	0	0.5	100	0.17	1.3	0.5	100	1.30	1.30
Beryllium	0	0.5	25	0.50	0	1	50	0.33	0	0.5	25	0.50	0	0.5	25	0.50	0.50
Cadmium	0	0.5	25	0.50	0	1	50	0.33	0	0.5	25	0.50	0	0.5	25	0.50	0.50
Chromium	6	1.3	25	6.00	17	2.5	50	17.00	0	1.3	25	1.30	6.3	1.3	25	6.30	6.15

April 1990 Samples
Metals Feed Rate Calculations

	DAF (mg/kg)	DAF DL	DAF dilution	CALC DAF (mg/kg)	API (mg/kg)	API DL	API dilution	CALC API (mg/kg)	564 mg/kg	564 DL	564 dilution	CALC 564 (mg/kg)	dup DAF mg/kg	DAF DL	DAF ilutio	CALC DAF (mg/kg)	CALC AVG (mg/kg)
Antimony	0	5	25	5.00	0	5	25	5.00	0	5	25	5.00	0	5	25	5.00	5.00
Barium	0	50	250	10.00	0	50	250	10.00	0	5	25	5.00	0	10	50	3.33	6.67
Lead	24	5	25	24.00	110	5	25	110.00	0	5	25	5.00	27	5	25	27.00	25.50
Mercury	0.17	0.13	250	0.17	0.43	0.13	250	0.43	0	0.13	250	0.03	0.15	0.13	250	0.15	0.16
Silver	0	1	25	1.00	0	1	25	1.00	0	1	25	1.00	0	1	25	1.00	1.00
Thallium	0	5	25	5.00	0	5	25	5.00	0	5	25	5.00	0	5	25	5.00	5.00
Arsenic	1.6	0.5	100	1.60	3	0.5	100	3.00	0	0.5	100	0.17	1.8	0.5	100	1.80	1.70
Beryllium	0	0.5	25	0.50	0	0.5	25	0.50	0	0.5	25	0.50	0	0.5	25	0.50	0.50
Cadmium	0	0.5	25	0.50	0	0.5	25	0.50	0	0.5	25	0.50	0	0.5	25	0.50	0.50
Chromium	8	1.3	25	8.00	79	1.3	25	79.00	0	1.3	25	1.30	8.3	1.3	25	8.30	8.15

NOTICE
If the filmed image is less clear than this Notice it is due to the quality of the document being filmed.

CD2F 003

0 9 1 4

May 1990 Samples
Metals Feed Rate Calculations

	DAF (mg/kg)	DAF DL	DAF dilution	CALC DAF (mg/kg)	API (mg/kg)	API DL	API dilution	CALC API (mg/kg)	564 mg/kg	564 DL	564 dilution	CALC 564 (mg/kg)	dup API mg/kg	API DL	API ilutio	CALC API (mg/kg)	AVG (mg/kg)
Antimony	0	5	25	5.00	0	5	25	5.00	0	5	25	5.00	0	5	25	5.00	5.00
Barium	12	5	25	12.00	0	5	25	5.00	0	5	25	5.00	0	5	25	5.00	5.00
Lead	15	5	25	15.00	5.5	5	25	5.50	0	5	25	5.00	0	5	25	5.00	5.25
Mercury	0.11	0.05	250	0.11	0	0.05	250	0.01	0	0.05	250	0.01	0.35	0.05	250	0.35	0.18
Silver	0	1	25	1.00	0	1	25	1.00	0	1	25	1.00	0	1	25	1.00	1.00
Thallium	0	5	25	5.00	0	5	25	5.00	0	5	25	5.00	0	5	25	5.00	5.00
Arsenic	1.1	0.5	100	1.10	0	0.5	100	0.17	0	0.5	100	0.17	0	0.5	100	0.17	0.17
Beryllium	0	0.5	25	0.50	0	0.5	25	0.50	0	0.5	25	0.50	0	0.5	25	0.50	0.50
Cadmium	0	0.5	25	0.50	0	0.5	25	0.50	0	0.5	25	0.50	0	0.5	25	0.50	0.50
Chromium	7	1.3	25	7.00	2.3	1.3	25	2.30	1.8	1.3	25	1.80	0	1.3	25	1.30	1.80

June 1990 Samples
Metals Feed Rate Calculations

	DAF (mg/kg)	DAF DL	DAF dilution	CALC DAF (mg/kg)	API (mg/kg)	API DL	API dilution	CALC API (mg/kg)	564 mg/kg	564 DL	564 dilution	CALC 564 (mg/kg)	dup 564 mg/kg	564 DL	564 ilutio	CALC 564 (mg/kg)	CALC AVG (mg/kg)
Antimony	0	5	25	5.00	0	5	25	5.00	0	5	25	5.00	0	5	25	5.00	5.00
Barium	8.5	5	25	8.50	74	10	50	74.00	0	5	25	5.00	0	5	25	5.00	5.00
Lead	9.3	5	25	9.30	120	5	25	120.00	0	5	25	5.00	0	5	25	5.00	5.00
Mercury	0	0.13	250	0.03	0.74	0.13	250	0.74	0	0.13	25	0.13	0	0.13	250	0.03	0.08
Silver	0	1	25	1.00	0	1	25	1.00	0	1	25	1.00	0	1	25	1.00	1.00
Thallium	0	5	25	5.00	0	5	25	5.00	0	5	25	5.00	0	5	25	5.00	5.00
Arsenic	1.3	0.5	100	1.30	2.6	0.5	100	2.60	0	0.5	100	0.17	0	0.5	25	0.50	0.33
Beryllium	0	0.5	25	0.50	0	0.5	25	0.50	0	0.5	25	0.50	0	0.5	25	0.50	0.50
Cadmium	0	0.5	25	0.50	0	0.5	25	0.50	0	0.5	25	0.50	0	0.5	25	0.50	0.50
Chromium	3.8	1.3	25	3.80	94	1.3	25	94.00	0	1.3	25	1.30	0	1.3	25	1.30	1.30

NOTICE
If the filmed image is less clear than this Notice it is due to the quality of the document being filmed.

CD2F 003

0 9 1 5

July 1990 Samples
Metals Feed Rate Calculations

	DAF (mg/kg)	DAF DL	DAF dilution	CALC DAF (mg/kg)	API (mg/kg)	API DL	API dilution	CALC API (mg/kg)	564 mg/kg	564 DL	564 dilution	CALC 564 (mg/kg)	dup DAF mg/kg	DAF DL	DAF ilutio	CALC DAF (mg/kg)	CALC AVG (mg/kg)
Antimony	0	5	25	5.00	0	5	25	5.00	0	5	25	5.00	0	5	25	5.00	5.00
Barium	12	5	25	12.00	0	10	25	10.00	0	5	25	5.00	19	5	25	19.00	15.50
Lead	34	5	25	34.00	12	5	25	12.00	0	5	25	5.00	32	5	25	32.00	33.00
Mercury	0.11	0.05	250	0.11	1.1	0.05	250	1.10	0	0.05	250	0.01	0.08	0.13	250	0.09	0.10
Silver	0	1	25	1.00	0	1	25	1.00	0	1	25	1.00	0	1	25	1.00	1.00
Thallium	0	5	25	5.00	0	5	25	5.00	0	5	25	5.00	0	5	25	5.00	5.00
Arsenic	1.7	0.5	100	1.70	0	0.5	100	0.17	0	0.5	100	0.17	1.6	0.5	100	1.60	1.65
Beryllium	0	0.5	25	0.50	0	0.5	25	0.50	0	0.5	25	0.50	0	0.5	25	0.50	0.50
Cadmium	0	0.5	25	0.50	0	0.5	25	0.50	0	0.5	25	0.50	0	0.5	25	0.50	0.50
Chromium	18	1.3	25	18.00	15	1.3	25	15.00	0	1.3	25	1.30	17	1.3	25	17.00	17.50

August 1990 Samples
Metals Feed Rate Calculations

	DAF (mg/kg)	DAF DL	DAF dilution	CALC DAF (mg/kg)	API (mg/kg)	API DL	API dilution	CALC API (mg/kg)	564 mg/kg	564 DL	564 dilution	CALC 564 (mg/kg)	dup API mg/kg	API DL	API ilutio	CALC API (mg/kg)	CALC AVG (mg/kg)
Antimony	0	5	25	5.00	0	5	25	5.00	0	5	25	5.00	0	5	25	5.00	5.00
Barium	19	5	25	19.00	18	5	25	18.00	0	5	25	5.00	0	50	25	50.00	34.00
Lead	39	5	25	39.00	71	5	25	71.00	0	5	25	5.00	120	5	25	120.00	95.50
Mercury	0.13	0.05	250	0.13	0.71	0.05	250	0.71	0	0.05	250	0.01	0.38	0.05	250	0.38	0.55
Silver	0	1	25	1.00	0	1	25	1.00	0	1	25	1.00	0	1	25	1.00	1.00
Thallium	0	5	25	5.00	0	5	25	5.00	0	5	25	5.00	0	5	25	5.00	5.00
Arsenic	1	0.5	100	1.00	1.4	0.5	100	1.40	0	0.5	100	0.17	1.9	0.5	25	1.90	1.65
Beryllium	0	0.5	25	0.50	0	0.5	25	0.50	0	0.5	25	0.50	0	0.5	25	0.50	0.50
Cadmium	0	0.5	25	0.50	0	0.5	25	0.50	0	0.5	25	0.50	0	0.5	25	0.50	0.50
Chromium	18	1.3	25	18.00	34	1.3	25	34.00	0	1.3	25	1.30	66	1.3	25	66.00	50.00

NOTICE
If the filmed image is less clear than this Notice it is due to the quality of the document being filmed.

CD2F 003

0 9 1 6

September 1990 Samples
Metals Feed Rate Calculations

	DAF (mg/kg)	DAF DL	DAF dilution	CALC DAF (mg/kg)	API (mg/kg)	API DL	API dilution	CALC API (mg/kg)	564 mg/kg	564 DL	564 dilution	CALC 564 (mg/kg)	dup API mg/kg	API DL	API ilutio	CALC API (mg/kg)	CALC AVG (mg/kg)
Antimony	0	5	25	5.00	0	5	25	5.00	0	5	25	5.00	0	5	25	5.00	5.00
Barium	24	5	25	24.00	12	5	25	12.00	0	5	25	5.00	18	5	25	18.00	15.00
Lead	39	5	25	39.00	43	5	25	43.00	0	5	25	5.00	45	5	25	45.00	44.00
Mercury	0.085	0.05	250	0.09	0.34	0.05	250	0.34	0.07	0.05	250	0.08	0.37	0.05	250	0.37	0.36
Silver	0	1	25	1.00	0	1	25	1.00	0	1	25	1.00	0	1	25	1.00	1.00
Thallium	0	5	25	5.00	0	5	25	5.00	0	5	25	5.00	0	5	25	5.00	5.00
Arsenic	1.1	0.5	100	1.10	0.91	0.5	100	0.91	0	0.5	100	0.17	1.2	0.5	25	1.20	1.06
Beryllium	0	0.5	25	0.50	0	0.5	25	0.50	0	0.5	25	0.50	0	0.5	25	0.50	0.50
Cadmium	0	0.5	25	0.50	0	0.5	25	0.50	0	0.5	25	0.50	0	0.5	25	0.50	0.50
Chromium	14	1.3	25	14.00	17	1.3	25	17.00	0	1.3	25	1.30	16	1.3	25	16.00	16.50

October 1990 Samples
Metals Feed Rate Calculations

	DAF (mg/kg)	DAF DL	DAF dilution	CALC DAF (mg/kg)	API (mg/kg)	API DL	API dilution	CALC API (mg/kg)	564 mg/kg	564 DL	564 dilution	CALC 564 (mg/kg)	dup 564 mg/kg	564 DL	564 ilutio	CALC 564 (mg/kg)	CALC AVG (mg/kg)
Antimony	0	5	25	5.00	0	5	25	5.00	0	5	25	5.00	0	5	25	5.00	5.00
Barium	0	50	250	10.00	53	50	250	53.00	0	5	25	5.00	0	5	25	5.00	5.00
Lead	170	5	25	170.00	200	5	25	200.00	0	5	25	5.00	0	5	25	5.00	5.00
Mercury	0.13	0.05	250	0.13	0.61	0.05	250	0.61	0	0.05	250	0.01	0	0.05	250	0.01	0.01
Silver	0	1	25	1.00	0	1	25	1.00	0	1	25	1.00	0	1	25	1.00	1.00
Thallium	0	5	25	5.00	0	5	25	5.00	0	5	25	5.00	0	5	25	5.00	5.00
Arsenic	0.97	0.5	100	0.97	2.3	2	400	2.30	0	0.5	100	0.17	0	0.5	100	0.17	0.17
Beryllium	0	0.5	25	0.50	0	0.5	25	0.50	0	0.5	25	0.50	0	0.5	25	0.50	0.50
Cadmium	0	0.5	25	0.50	0	0.5	25	0.50	0	0.5	25	0.50	0	0.5	25	0.50	0.50
Chromium	11	1.3	25	11.00	47	1.3	25	47.00	0	1.3	25	1.30	0	1.3	25	1.30	1.30

NOTICE
If the filmed image is less clear than this Notice it is due to the quality of the document being filmed.

CD2F 003

0 9 1 1 6

November 1990 Samples
Metals Feed Rate Calculations

	DAF (mg/kg)	DAF DL	DAF dilution	CALC DAF (mg/kg)	API (mg/kg)	API DL	API dilution	CALC API (mg/kg)	564 mg/kg	564 DL	564 dilution	CALC 564 (mg/kg)	dup DAF mg/kg	DAF DL	DAF ilutio	CALC DAF (mg/kg)	CALC AVG (mg/kg)
Antimony	0	5	25	5.00	0	5	25	5.00	0	5	25	5.00	0	5	25	5.00	5.00
Barium	0	50	250	10.00	0	50	250	10.00	0	5	25	5.00	0	50	250	10.00	10.00
Lead	190	5	25	190.00	120	5	25	120.00	0	5	25	5.00	190	5	25	190.00	190.00
Mercury	0.11	0.05	250	0.11	0.35	0.05	250	0.35	0	0.05	250	0.01	0.09	0.05	250	0.09	0.10
Silver	0	1	25	1.00	0	1	25	1.00	0	1	25	1.00	0	1	25	1.00	1.00
Thallium	0	5	25	5.00	0	5	25	5.00	0	5	25	5.00	0	5	25	5.00	5.00
Arsenic	1.4	0.5	100	1.40	2.9	0.5	100	2.90	0	0.5	100	0.17	1.5	1	100	1.50	1.45
Beryllium	0	0.5	25	0.50	0	0.5	25	0.50	0	0.5	25	0.50	0	0.5	25	0.50	0.50
Cadmium	0	0.5	25	0.50	0	0.5	25	0.50	0	0.5	25	0.50	0	0.5	25	0.50	0.50
Chromium	15	1.3	25	15.00	36	1.3	25	36.00	0	1.3	25	1.30	15	1.3	25	15.00	15.00

December 1990 Samples
Metals Feed Rate Calculations

	DAF (mg/kg)	DAF DL	DAF dilution	CALC DAF (mg/kg)	API (mg/kg)	API DL	API dilution	CALC API (mg/kg)	564 mg/kg	564 DL	564 dilution	CALC 564 (mg/kg)	dup DAF mg/kg	DAF DL	DAF ilutio	CALC DAF (mg/kg)	CALC AVG (mg/kg)
Antimony	0	5	25	5.00	0	5	25	5.00	0	5	25	5.00	0	5	25	5.00	5.00
Barium	18	5	25	18.00	7.5	5	25	7.50	0	5	25	5.00	36	5	25	36.00	27.00
Lead	31	5	25	31.00	310	50	25	310.00	0	5	25	5.00	61	5	25	61.00	46.00
Mercury	0.12	0.05	250	0.12	1.2	0.05	250	1.20	0	0.002	10	0.002	0.23	0.05	250	0.23	0.18
Silver	0	1	25	1.00	0	1	25	1.00	0	1	25	1.00	0	1	25	1.00	1.00
Thallium	0	5	25	5.00	0	5	25	5.00	0	5	25	5.00	0	5	25	5.00	5.00
Arsenic	1.1	0.5	100	1.10	3.8	1	100	3.80	0	0.5	100	0.17	2.2	0.5	100	2.20	1.65
Beryllium	0	0.5	25	0.50	0	0.5	25	0.50	0	0.5	25	0.50	0	0.5	25	0.50	0.50
Cadmium	0	0.5	25	0.50	1	0.5	25	1.00	0	0.5	25	0.50	0	0.5	25	0.50	0.50
Chromium	14	1.3	25	14.00	530	1.3	25	530.00	0	1.3	25	1.30	30	1.3	25	30.00	22.00

January 1991 Samples
Metals Feed Rate Calculations

NOTICE
If the filmed image is less clear than this Notice it is due to the quality of the document being filmed.

CD2F 003

0 9 1 8

Date of Calculation: April 23, 1991
January 1991 Samples
Metals Feed Rate Calculations

	DAF (mg/kg)	DAF DL	DAF dilution	CALC DAF (mg/kg)	API (mg/kg)	API DL	API dilution	CALC API (mg/kg)	564 mg/kg	564 DL	564 dilution	CALC 564 (mg/kg)	dup DAF mg/kg	DAF DL	DAF llutio	CALC DAF (mg/kg)	CALC AVG (mg/kg)
Antimony	0	5	25	5.00	0	5	25	5.00	0	5	25	5.00	0	5	25	5.00	5.00
Barium	21	5	25	21.00	130	50	250	130.00	0	5	25	5.00	22	5	25	22.00	21.50
Lead	73	5	25	73.00	380	50	250	380.00	0	5	25	5.00	72	5	25	72.00	72.50
Mercury	0.1	0.1	200	0.10	1.9	0.25	500	1.90	0	0.002	10	0.00	0	0.1	200	0.02	0.06
Silver	0	1	25	1.00	0	1	25	1.00	0	1	25	1.00	0	1	25	1.00	1.00
Thallium	0	5	25	5.00	0	5	25	5.00	0	5	25	5.00	0	5	25	5.00	5.00
Arsenic	1.7	0.5	100	1.70	4.4	1	200	4.40	0	0.5	100	0.17	1.7	0.5	100	1.70	1.70
Beryllium	0	0.5	25	0.50	0	0.5	25	0.50	0	0.5	25	0.50	0	0.5	25	0.50	0.50
Cadmium	0	0.5	25	0.50	0.75	0.5	25	0.75	0	0.5	25	0.50	0	0.5	25	0.50	0.50
Chromium	14	1.3	25	14.00	530	13	250	530.00	0	1.3	25	1.30	13	1.3	25	13.00	13.50

April 1991 Samples
Metals Feed Rate Calculations

	DAF (mg/kg)	DAF DL	DAF dilution	CALC DAF (mg/kg)	API (mg/kg)	API DL	API dilution	CALC API (mg/kg)	564 mg/kg	564 DL	564 dilution	CALC 564 (mg/kg)	dup API mg/kg	API DL	API ilutio	CALC API (mg/kg)	CALC AVG (mg/kg)
Antimony	0	5	25	5.00	0	5	25	5.00	0	5	25	5.00	0	5	25	5.00	5.00
Barium	15	5	25	15.00	83	50	250	83.00	0	5	25	5.00	88	50	250	10.00	46.50
Lead	25	5	25	25.00	390	50	250	390.00	0	5	25	5.00	360	50	250	360.00	375.00
Mercury	0	0.13	250	0.03	1.16	0.13	250	1.16	0	0.13	250	0.03	0.99	0.13	250	0.99	1.08
Silver	0	1	25	1.00	0	1	25	1.00	0	1	25	1.00	0	1	25	1.00	1.00
Thallium	0	5	25	5.00	0	5	25	5.00	0	5	25	5.00	0	5	25	5.00	5.00
Arsenic	1.3	0.5	100	1.30	4	1	200	4.00	0	0.5	100	0.17	4.4	1	200	4.40	4.20
Beryllium	0	0.5	25	0.50	0	0.5	25	0.50	0	0.5	25	0.50	0	0.5	25	0.50	0.50
Cadmium	0	0.5	25	0.50	1	0.5	25	1.00	0	0.5	25	0.50	1	0.5	25	1.00	1.00
Chromium	11	1.3	25	11.00	640	13	250	640.00	0	1.3	25	1.30	580	13	250	580.00	610.00

NOTICE
If the filmed image is less clear than this Notice it is due to the quality of the document being filmed.

CD2F 003

0 9 1 9

April 1991 (2nd Quarter 1991)
TOX Calculation

	DAF (mg/kg)	API (mg/kg)	CAUSTIC (mg/kg)	110 DAF (lb/hr)	20 API (lb/hr)	10 CAUSTIC (lb/hr)	Total (lb/hr)	limit (lb/hr)
TOX	100.00	100.00	100.00	5.50	1.00	0.50	7.00	40

Example Calculation:

DAF (lb/hr) = 100 (mg/kg) * 8.33 /1000000 * 150 (gpm) * 60 (min/hr)
= 7.5 lb/hr

NOTICE
If the filmed image is less clear than this Notice it is due to the quality of the document being filmed.

CD2F 003

0260

AMOCO
PROJECT # 1989

WASTE CHARACTERIZATION ANALYSIS

WASTE TYPE : DAF FLOAT

ANALYSIS

SAMPLE ID	% TOTAL SOLIDS	% MOISTURE	% ASH	DENSITY (g/ml)	HEATING VALUE (BTU/lb)	FLASH POINT	POHC
RUN 1	2.13						
RUN 2	6.82						
RUN 3	8.09						
RUN 4	6.4	------- NO ANALYSIS FOR THESE PARAMETERS -------					
RUN 5	8.64						
RUN 6	9.25						
BLANK	0.01						

DUPLICATE ANALYSIS

SAMPLE ID	% TOTAL SOLIDS	% MOISTURE	% ASH	DENSITY (g/ml)	HEATING VALUE (BTU/lb)	FLASH POINT	POHC
RUN 1 DUP							
RUN 2 DUP							
RUN 3 DUP	7.51	------- NO ANALYSIS FOR THESE PARAMETERS -------					
RUN 4 DUP							
RUN 5 DUP							
RUN 6 DUP							

NOTICE
If the filmed image is less clear than this Notice it is due to the quality of the document being filmed.

CD2F 003

0921

AMOCO
PROJECT # 1989

WASTE CHARACTERIZATION ANALYSIS

WASTE TYPE : DAF CAKE

ANALYSIS

SAMPLE ID	% TOTAL SOLIDS	% MOISTURE	% ASH	DENSITY (g/ml)	HEATING VALUE (BTU/lb)	FLASH POINT	PPM 111-TCE (mg/Kg)	PPM TOLUENE (mg/Kg)
RUN 1	21.22	78.78	7.6	1.25	3490	>160	0	17.58
RUN 2	22.36	77.64	7.95	0.80	3410	>160	0	30.32
RUN 3	21.76	78.24	7.87	1.28	3280	>160	0	31.48
RUN 4	21.67	78.33	7.31	0.65	3380	>160	4.42	27.3
RUN 5	22.57	77.43	8.09	0.73	2900	>160	0	18.3
RUN 6	21.68	78.32	7.79	0.92	3380	>160	0	24.58
BLK DI H2O	.0066	99.99	0.006					

DUPLICATE ANALYSIS

SAMPLE ID	% TOTAL SOLIDS	% MOISTURE	% ASH	DENSITY (g/ml)	HEATING VALUE (BTU/lb)	FLASH POINT	PPM 111-TCE (mg/Kg)	PPM TOLUENE (mg/Kg)
RUN 3 DUP	21.84	78.16	7.85					
RUN 4 DUP							3.10	23.56

4/3/89

NOTICE
If the filmed image is less clear than this Notice it is due to the quality of the document being filmed.

CD2F 003

0 9 2 2 6

NOTICE
If the filmed image is less clear than this Notice it is due to the quality of the document being filmed.

CD2F 003

0 9 2 3

F037 AND F038 WASTE CAPACITY ANALYSIS:
DATA USE AND TRACKING SHEET

Refinery: Amoco - Texas City Refinery
State: Texas

Data sources available:

_x_ Petroleum refinery visits/voluntary submission

_x_ National Survey of Hazardous Waste Treatment, Storage, Disposal, and Recycling Facilities (TSDR survey)

__ National Survey of Hazardous Waste Generators

__ Biennial report/state reporting requirements

__ California hazardous waste data base

_x_ Petroleum refinery data base (PRDB)

_x_ No-migration petitions

_x_ Comments from proposed rule

__ Organic TC Survey

Basis for F037 and F038 waste estimation:

EPA used data provided by Amoco (Texas City Refinery) because it was the most recent and the only source that describes F037 and F038 waste generation and management. Other sources were used only in comparison with the refinery's data submission.

F037 and F038 waste estimates:

F038 (routine) - 10,400 tons/year of dewatered cake estimated by EPA based on large-refinery volume reduction of 80 percent by dewatering, using reported wet sludge volume of 52,000 tons/year generated as DAF bottoms.

F037 (one-time) - 200,000 tons/year from cleanout of stormwater and equalization basins. Amoco plans to replace stormwater and equalization basins with above-ground storage tanks.

Amoco Texas City reports no other F wastes than those identified above.

According to more recent information from the comments to the proposed rule, this facility indicated that it would generate the following quantities of surface impoundment sludges during the indicated time periods:

F037/8 (surface impoundments) = 0 tons (7/92 - 12/92)

F037/8 (surface impoundments) = 0 tons (1/93 - 12/93)

F037/8 (surface impoundments) = 0 tons (1/94 - 12/94)

F037 (routine) = 85,000 tons/yr.

F038 (routine) = 52,000 tons/yr.

The assumption used previously concerning dewatering of F038 (i.e., 80%) was then applied to these new F037 and F038 volumes.

NOTICE
If the filmed image is less clear than this Notice it is due to the quality of the document being filmed.

CD2F 003

0 9 2 4

NOTICE
If the filmed image is less clear than this Notice it is due to the quality of the document being filmed.

CD2F 003

0 9 2 5

TRIP REPORT[1]
AMOCO TEXAS CITY REFINERY VISIT (5/22/91)

Amoco Attendees: Carole Engelder
Dave Kalet

EPA Attendees: Jo-Ann Bassi (OSW)
Bob Goeltz (ICF Inc.)
James Hsu (ICF Inc.)

REFINERY DESCRIPTION

Amoco's Texas City refinery, built in the 1930's, is the largest producer of gasoline in North America. The refinery is separated into three sections: crude processing (east plant); refining and octane building (west plant); and wastewater treatment environmental facilities. Gulf Coast Waste Disposal Authority (GCA). GCA operated the wastewater treatment facility for Amoco until 1989, when Amoco purchased the facility from GCA. Amoco's Texas City refinery processes up to 430 thousand barrels of crude oil per day, and reports a design water outfall of 20 million gallons per day.

WASTEWATER TREATMENT SYSTEM

Exhibit 1 shows the wastewater treatment facility at the refinery, and Exhibit 2 presents the wastewater treatment flow diagram. Process wastewaters collect in oil/water separators located throughout the refinery at the process units, and drain through refinery sewers to one of three API separator banks. There is one API separator bank in each section of the refinery. Amoco Oil Texas City does not have segregated process wastewater/stormwater sewers; therefore, stormwaters are also conveyed to the API separator banks. Oil, water, and solids undergo gravity separation in the API separator. The oil is removed and subsequently returned to crude processing. Solids form the API separator sludge (K051), which is removed from the separator by scrapers, sent to filter presses for dewatering, and recycled to cokers as a raw material for producing petroleum coke. The water phase from the API separator is discharged to an equalization basin prior to treatment in DAF units. When stormwater flow exceeds the designed throughput of API separator banks, it is diverted to stormwater storage impoundments and then to the equalization basin where it mixes with API separator effluent water. The equalization basin normalizes disturbances in wastewater flow and pollutant concentration to the

[1] This report provides a general description of a particular petroleum refinery, and then discusses the refinery's wastewater treatment system, generation of K048-K051, F037, and F038 wastes, and waste management practices. This report has been developed based on observations by EPA (with support from ICF Inc.), and has been supplemented by information provided by the refinery.

three DAF units.

Since oil and solids are part of the diverted stormwaters, and are not completely removed from the API separator effluent water, gravity settling occurs in both the stormwater storage impoundments and equalization basins, and forms stormwater storage and equalization sludges (F037). These sludges are removed (as the units are cleaned) and sent to an off-site Amoco land treatment facility near the refinery.

DAF units employ flocculants and dissolved air to form an oily DAF float (K048), which is skimmed off, mixed and dewatered with the API separator sludge, and recycled to the cokers. Small particles are emulsified in the DAF float while larger oil-contaminated particles settle to form DAF bottoms (F038). This sludge is mixed and dewatered with the API separator sludge and DAF float, and used in the cokers. DAF unit effluent water is transferred to another equalization basin where gravity settling forms an equalization sludge (F037). Plans are being studied to close and replace this unit with an above-ground tank. At that time, the F037 sludge would be removed and sent off site to the Amoco land treatment facilities or to treatment.[2] Wastewater from the equalization basin is pumped to activated sludge units, then to clarifiers and filters, and finally discharged via a NPDES permit. Amoco reports that the wastewater treatment system recovers approximately 1,500 barrels of oil per day.

PETROLEUM REFINING WASTE GENERATION

Amoco Texas City estimates[3] that generation of API separator sludge (K051) ranges from 8,000 to 15,500 wet tons[4] per year, and DAF float (K048) ranges from 32,000 to 120,000 wet tons per year. The trend at the refinery is toward an increase in K048 generation and decrease in K051 generation. Amoco attributes the high variability in K048 generation to variability in the types of crude processed, and to the presence of emulsion-forming substances, such as CaF (generated in HF alkylation), that decrease oil/water/solids separation efficiency in the DAF unit. Amoco has observed that a decrease in generation of K051 corresponds to an increase in generation of DAF bottoms (F038), and vice versa. Therefore, there is also considerable variability in the generation of DAF bottoms, which is estimated at 13,000 to 91,000 wet tons per year. Despite these variations, Amoco's combined generation of DAF float and bottoms remains relatively constant at 106,000 to 133,000 wet tons per year.

---

[2] The F037 sludge will be sent to land treatment facility if closure of the equalization basin occurs before the F037/F038 LDR becomes effective. Otherwise, the sludge will be sent to treatment.

[3] Waste generation estimates based on 1987 to 1990 data.

[4] Amoco reports wastes in wet tons, which contain approximately 80 percent water.

NOTICE
If the filmed image is less clear than this Notice it is due to the quality of the document being filmed.

CD2F 003

0926

F037 sludges from the stormwater storage impoundments and equalization basins (i.e., equalization basins for API separator effluent and DAF unit effluent) are generated from clean out of these units. Amoco's recent clean out of stormwater storage impoundments generated 205,000 tons of wet sludge. No data are available on the amount of F037 sludge that would be generated from closure of the remaining stormwater impoundment and two equalization basins; a conservative estimate would put the quantity over 200,000 tons.

F037 sludges may also be generated in the unit oil/water separators. However, these sludges are cleaned out periodically by vacuum trucks and discharged to API separators, and are, therefore, accounted for in K051 and K048 waste volumes.

Other hazardous wastes generated at the refinery include 50 to 250 wet tons per year of heat exchanger cleaning solids (K050), which is sent to the cokers, and 5,000 to 172,000 tons of soil contaminated with K048-K052, F037, F038 or D018 wastes managed at the land treatment facility. The refinery accepts no off-site petroleum refining wastes for treatment or recycling.

WASTE MANAGEMENT PRACTICES

Exhibit 3 presents a block diagram of the refinery's waste management practices. K048, K050, K051, and F038 waste sludges are transported to heated storage, gravity thickening, and conditioning prior to filtration. The resulting sludge contains 20 to 30 percent solids.[5] Plate and frame presses filter oil and water from the sludge to produce a cake containing approximately 60 percent solids and a heat content ranging from 50 to 1,000 Btu/lb. The filtrate undergoes oil/water separation to recycle oil back to crude processing. Prior to November 8, 1990, when the K048-K052 land disposal restriction (LDR) became effective, the filter cake (containing K048, K051, and F038) was sent to the nearby Amoco land treatment facility. The K048-K052 LDR prompted the refinery to install the capacity to recycle petroleum refining wastes to their cokers and avoid the cost and liability associated with land disposing petroleum refining wastes. The refinery has three coking units, configured with two drums per unit. Two units accept petroleum refining wastes for producing fuel grade coke. The third unit produces anode grade coke. The waste recycling system was designed by Amoco and was brought on line in October 1990. In using the cokers, the filter cake is mixed with a hydrocarbon to form a slurry containing 10 percent solids, and is injected into the cokers. Amoco designed to process to increase the coke ash content by no more than three percent when recycling petroleum refining wastes, but Amoco reports that the actual increase in coke ash content is well below three percent.

Amoco had start-up problems with the waste recycling system, which resulted in an accumulation of filter cake. At one point in January 1991,

[5] Solids may comprise up to 20 percent filter aid.

NOTICE
If the filmed image is less clear than this Notice it is due to the quality of the document being filmed.

CD2F 003

0 9 2 1

Amoco counted a backlog of 60 roll-off boxes storing filter cake designated for cokers. Amoco contacted Chem Waste Management and Rollins for hazardous waste incineration service, but found that they could only accommodate one to two roll-off boxes per week. The backlog, which required the facility to petition the Texas Water Commission for a 90-day storage extension is gradually being worked off by correcting the start-up problems, refeeding the filter cake to the coking system, and sending roll-off boxes to incinerators. Exhibit 4 presents the methods used to manage the filter cake backlog. Amoco expects that by the time the F037/F038 LDR becomes effective in October 1992 most petroleum refining wastes (i.e., K048, K051, F037, and F038) would be recycle to the cokers.[6]

The use of petroleum refining waste as fuel for cement kilns was not considered as a viable option when coker start-up problems occurred because Amoco is concerned about the potential liability associated with waste residues in cement being interpreted as land placement constituting disposal. Furthermore, fluoride, phosphates, and a high ash content in refinery's wastes preclude the use of Rhone-Poulenc's sludge incineration capacity.

Amoco is in the process of closing one remaining stormwater storage impoundment and two equalization basins, and replacing them with above-ground tanks because of hazardous waste regulations. Above-ground tanks would have similar sludge accumulation rates to those in impoundments and equalization basins, but uncertainty in the cleanout frequency presents difficulties in estimating periodic removal of F037 sludges from tanks.

The refinery is considering plans in the next two to six years to segregate process wastewater and stormwater flows. This modification will eliminate a significant amount of water and dirt that passes through the wastewater treatment system, and will result in a major reduction in the amount of petroleum refining wastes generated.

---

[6] If the next stormwater impoundment or equalization basin cleanout occurs prior to the F037/F038 LDR, Amoco indicated that the F037 sludge generated would be sent to Amoco's land treatment facility.

NOTICE
If the filmed image is less clear than this Notice it is due to the quality of the document being filmed.

CD2F 003

0928

Amoco Oil Company
Post Office Box 401
Texas City, Texas 77592
409-945-1011

J.E. Stanhope
Refinery Manager

7 June 1991

AIRBILL NO.: 8515501761

Mr. James Hsu
ICF
9300 Lee Highway
Fairfax, Virginia 22031-1207

Response to EPA Request for Voluntary Information on Refining Wastes

Attached are responses to the questions solicited by Ms. J. Bassi of the EPA Office of Solid Waste in her letter dated 13 May 1991, requesting voluntary information on petroleum refining wastes. Amoco Oil Company is pleased to give this data to assist the EPA in developing land disposal restrictions for F037 and F038 primary sludges.

If you have questions or need clarification on this information or any gathered during your site visit 22 May 1991, please feel free to contact me at 409/945-1196.

Yours truly,

Carole L. Engelder, PhD, PE
Waste Minimization Coordinator

Attachment

Ms. J. Bassi

NOTICE
If the filmed image is less clear than this Notice it is due to the quality of the document being filmed.

CD2F 003

0929

NOTICE
If the filmed image is less clear than this Notice it is due to the quality of the document being filmed.

CD2F 003

0930

Voluntary Information on Petroleum Refining Wastes

Amoco Oil Company -- Texas City Refinery

Wastewater Treatment Facility

1. **What is your current configuration?**

   A flow-diagram of the current wastewater configuration is shown in Figure 1, with an aerial diagram of the facility in Figure 2. Wastewater from twenty-five process units and stormwater from all areas of the refinery flow hydrogeologically to one of three main API separators. During storm events, excess flow is diverted by lift station pumps to stormwater storage in both surface impoundments and an aboveground storage tank. Wastewater flow from the three API separators and stormwater worked out of storage (depending on downstream activated sludge plant capacity) pass through an equalization impoundment on the way to dissolved air flotation (DAF). The refinery currently operates three DAF units in parallel. After DAF treatment, the wastewater flows into another part of the equalization basin, then through mixed-media pressure prefilters, and into the activated sludge plant. Following aeration and clarification, the wastewater is filtered again in mixed-media pressure final filters and discharged into a canal leading to Galveston Bay.

   Solid waste generated during wastewater treatment is managed according to the flow diagram given in Figure 3. The wastewater treatment sludges generated in the API separators and DAF units is pumped to heated storage and gravity thickening tanks where oil/water is decanted. The sludges are mixed and conditioned before filtration in a plate-and-frame filter press. The filter cake produced from the filter press is currently reslurried with a refinery hydrocarbon and pumped to the coker complex for conversion to fuel and oil products. Not shown in the figure, biosludge or sludge wasted from the activated sludge plant to maintain a steady-state bacterial population, is pumped to the refinery land treatment facility.

2. **How segregated is your system?**

   Currently, the refinery sewer system in not segregated; process unit wastewater and refinery stormwater is commingled.

3. **What modifications have been made in the last 5 years?**
   In 1986-87, several upgrades and modifications were made to the wastewater treatment facility. A third DAF unit was put on line, an additional mixed-media pressure prefilter was added, and a sludge deoiling unit (SDU) was constructed. The SDU was designed for refinery sludge dewatering and oil recovery and consists of plate-and-frame pressure filters. In 1989, a 750,000 barrel aboveground stormwater storage tank was built and in 1990, sludge coker injection facilities were designed and constructed.

4. **What were the driving forces behind these modifications?**
   DAF capacity was increased to improve wastewater treatment facility operation. The SDU was added to recover additional valuable oil from the wastewater treatment sludges. The stormwater tank was built in response to a need for more storage capacity and improved stormwater management. The sludge coking system was designed in anticipation of the K048-K052 land ban.

5. **What future modifications are planned?**
   Amoco Oil Company is planning several major modifications in the near future: sewer segregation, additional aboveground stormwater storage capacity, aboveground equalization to replace the existing equalization basin/surface impoundment, and covering all treatment units on the primary side of activated sludge treatment.

6. **What are the driving forces behind these modifications?**
   Primary sludge, TC, and benzene NESHAP rules.

7. **How have the K-list, TC, and F-list rulings and land bans affected the facility in terms of modifications, operation, capacity, etc?**
   These rulings added incentive for development of a company-wide waste minimization program for Amoco Oil and the assignment of a facility Coordinator with duties exclusive to waste minimization efforts at the Texas City refinery. The K048-K052 land ban, as mentioned previously, led to the design and construction of a sludge coking process.

NOTICE
If the filmed image is less clear than this Notice it is due to the quality of the document being filmed.

CD2F 003

0 9 3 1

NOTICE
If the filmed image is less clear than this. Notice it is due to the quality of the document being filmed.

CD2F 003

0932

K048-K052 and TC Wastes

1. **What is estimated generation and land disposal rate of K048-K052 and TC wastes?**
   Generation ranges for hazardous refinery wastes over the past four years is given in Table 1. Also shown is the current management technique for each stream. During 1987-1990, no waste identified as K049, slop oil emulsion solids was generated. The refinery does not produce leaded gasoline, so no K052 waste was generated during that time period either. All K-list wastes are currently managed by either on-site recycling to the fuel-grade cokers, or to off-site commercial incineration.

   Over thirty waste streams failing the TCLP has been identified, so far, including soils, sludges, and aqueous waste streams. Their generation rates and current management techniques are also given in Table 1. Generation of TC contaminated soils is dependent on construction and clean-up activities within the refinery. Although these may be one-time generations, much of this activity is planned at the refinery in the future.

2. **How do you currently treat, recycle, or dispose of these wastes and are there any foreseeable changes?**
   (See previous question and Table 1.) The refinery is actively pursuing additional recycling options for the hazardous sludges as alternatives to off-site incineration, the current back-up option to sludge coking. These include raw material replacement at a cement kiln, although the state government in Texas may make it difficult to keep our wastes in Texas through permit moratoriums.

3. **How have the waste generation rates changed with the hazardous waste ruling and land ban?**
   Generation rate of K-list and TC hazardous wastes has neither increased nor decreased since the November 1990 land ban on third-third wastes.

4. **Have there been any upstream or wastewater treatment facility operating changes to reduce the amount of these wastes generated and how effective are these changes?**
   Upstream source reduction measures have been implemented to prevent solids entering the sewer, especially during storm events, such as street sweeping and area drain retrofitting. It was estimated that 2000 wet tons of hazardous sludge was prevented through these activities[1]. Upstream operating changes include increased clean-out frequency of the HF Alkylation Unit Calcium Fluoride sludge tank, which prevented an estimated 9770 wet tons of hazardous sludge formation[2,4].

5. **Will the proposed F037 and F038 land ban affect the amount of these wastes produced?**
   Referring to Table 1, DAF bottoms sludge is already managed with K-list wastes. Some of the TC sludges that are currently land treated, originate from sewer system cleaning and would be considered primary sludges subject to land ban.

6. **How much of these wastes are stored in containers or surface impoundments?**
   Since the November 1990 land ban on K-list wastes, filter cake not able to be recycled on-site to the coking complex or sent off-site for commercial incineration (in both cases due to limited actual operating capacities) has been stored at the refinery in lined and covered roll-off boxes. At one point, early in 1991, as many as 60 roll-off boxes containing approximately 15 wet tons each of filter cake were stored on-site due to lack of coking and incineration capacity. By mid-May 1991, eleven boxes of filter cake remained in storage on-site. Figure 4 illustrates the status of all filter cake dropped into storage boxes between 11/8/90 and 5/21/91. Slightly over half were able to be worked back into the sludge coking process, while one-third found commercial incineration capacity. Ten percent remained in storage on May 21.

7. **What are the chemical and physical characteristics of the currently generated and stockpiled wastes?**
   Raw refinery sludges are generally 10-20% inert solids, 10-20% oil, and 60-80% water. The filter cake generated at the refinery is approximately 50-60% solids, 5-10% oil, and 30-40% water. Net heating value of the filter cake ranges from less than 50 BTU/lb to 500 BTU/lb.

8. **How will these characteristics change with any planned facility modifications and operating changes?**
   Planned modifications within the refinery are expected to change the total quantity of wastes generated rather than altering the general chemical or physical characteristics.

9. **What quantity of your secondary treatment waste, such as sludge from the aggressive biological units, is categorized as TC waste?**
   To date waste activated sludge has not failed the TCLP, and therefore is not expected to be categorized as a TC waste.

NOTICE
If the filmed image is less clear than this Notice it is due to the quality of the document being filmed.

CD2F 003

0 0 3 3

NOTICE
If the filmed image is less clear than this Notice it is due to the quality of the document being filmed.

CD2F 003

0934

F037 and F038 Wastes

1. **Is there a current estimate of the amount of F037 and F038 wastes generated?**
   See Table 1. DAF bottoms, considered a primary sludge, have ranged from 13,000 to 91,000 wet tons/year between 1987 and 1990. (*Note that during this time period, sludge from the DAF units [float and bottoms combined] ranged 70,000 - 160,000 wet tons/year.*) Primary sludges from equalization and stormwater storage ranged from a year when no dredging or clean-out occurred to 205,000 wet tons/year. Primary sludges from process unit oil/water separators and sewer pumping lift stations are removed by vacuum truck and taken to one of the main API separators, where the quantities are already considered as K048 or K051.

2. **Is there an estimate of the amount of F037 and F038 wastes stored in containers or surface impoundments?**
   Other than the DAF bottoms contained in the filter cake, no primary sludges are being stored in the refinery. For an estimate of the sludge contained in surface impoundments due to the nature and function of the unit, see the previous question.

3. **What is your current treatment, recycle, or disposal method and how will this change with the land ban?**
   Referring to Table 1, DAF bottoms are currently managed with the already land banned K-list wastes. Sludges generated from equalization and stormwater storage are being dewatered/deoiled and sent to the refinery's land treatment facility for ultimate treatment and disposal. After the primary sludge land ban, these sludges will either be recycled to the refinery coker or incinerated off-site. Primary sludges from process unit oil/water separators and sewer pumping lift stations is trucked to the wastewater treatment facility and managed along with the K-list wastes.

4. **What are the capacities of these treatment, recycle, and disposal methods in relationship to F037 and F038 wastes?**
   The sludge coking process is limited by a permit capacity of 50 dry tons/day of solids in the reslurry stream, or approximately 120,000 - 150,000 wet tons/year of hazardous sludge[2]. Current operating capacity is only 22 dry tons/day, though, or approximately 50,000 - 65,000 wet tons/year of sludge. The K-list and DAF bottoms sludges can probably be handled on-site with continued optimization of the sludge coking process, but excess quantities of equalization and stormwater sludge will probably have to be sent off-site.

5. **Are there any planned changes, either physical or operational, to deal with the land ban and how these changes affect K048-K052 waste generation?**
   Current plans include evaluation of alternate recycling technologies, such as cement kilns. From a technical feasibility standpoint, cement kilns appear to adequately treat these types of wastes; however, concern exists over the liabilities associated with utilizing kilns when the cement product was manufactured using a listed waste and then applied to the land. The regulatory status would be clear if the agency ruled that such use does not constitute disposal.

6. **Is it possible to reduce F037/F038 or K048-K052 wastes by putting more of a load on the aggressive biological units?**
   No. By design, biological treatment is used to remove dissolved organics from wastewater streams. By this question, it is assumed that reducing primary and K-list wastes means increasing solids/oil emulsion loadings to the activated sludge plant. From an engineering standpoint, little primary and K-list sludge would be avoided before the biological treatment process would be upset from the improper loading conditions.

General

1. **What are your offsite treatment options and what are the unique features of your waste that would limit the treatability options?**
   Our current off-site treatment options include incineration by Chemical Waste Management in Port Arthur, Texas and Rollins Environmental in Deer Park, Texas.

   For numerous reasons, the Rhone-Poulenc sulfuric acid regeneration plant is not an option to our refinery, including presence of fluorides and phosphates and the high ash content of our filter cake.

   Efforts to reduce our waste stream volume by dewatering and oil recovery in a plate-and-frame filter press have been successful. However, the volume reduction has changed the waste from a sludge to a non-pumpable solid filter cake. Since the waste as generated from our refinery is not pumpable, it has limited the processes and equipment that can handle and treat our waste. If a disposal facility must reslurry the filter cake prior to processing, the stated capacity of the disposal facility is decreased according to the quantity and nature of liquid added to achieve a pumpable state.

   We are currently pursuing raw material substitution for our filter cake in cement manufacturing. Our filter cake is not a candidate for use as a fuel in cement manufacturing because of the low net heating value (see question 7 above) and Amoco Corporation considers blending up to a higher BTU "sham recycling".

NOTICE
If the filmed image is less clear than this Notice it is due to the quality of the document being filmed.

CD2F 003

0 9 3 5

2. **What modifications have been done or are planned upstream to reduce the amount of waste generated in the wastewater treatment facility.**
   Sewer segregation will decrease solids entering the process wastewater from soil erosion.

3. **Will the BIF rulings affect any of the current disposal options, onsite, captive or commercial?**
   With the BTU minimum dropped from the rule, it should theoretically be easier to reuse our filter cake in cement manufacturing.

4. **Is there a preference on producing F037/F038 wastes or K048-K052 wastes in terms of handling or disposal?**
   Until the land ban, primary sludges can be treated and disposed at the refinery land treatment facility,

5. **What is the frequency of cleanout for the various wastewater treatment units?**
   The main API separators are cleaned of bottoms sludge approximately twice a year.

Additional Information

1. **Will the State of Texas permit moratorium impact national capacity?**
   Cement kilns and other facilities in Texas not already permitted to accept hazardous refinery wastes should probably not be included in the national capacity calculation for F037-F038 and TC wastes, since a moratorium on new permits is in place in Texas.

2. **Can storage boxes of K048-K051 filter cake be sent to a commercial incinerator site for storage to avoid exceeding the 90-day limit at the refinery?**
   No. Chemical Waste Management has refused to accept waste until capacity is imminently available in their incinerator and we are unaware of any commercial storage facility willing to accept roll-off boxes.

NOTICE
If the filmed image is less clear than this Notice it is due to the quality of the document being filmed.

CD2F 003

0936

References

1. "1990 Hazardous Waste Minimization Report" to the Texas Water Commission, 24 January 1991.

2. "Amendment to Coker Complex Permit No. R-2315" to the Texas Air Control Board, 7 March 1990.

NOTICE
If the filmed image is less clear than this Notice it is due to the quality of the document being filmed.

CD2F 003

0937

Table 1. Hazardous Waste Generation and Management

Amoco Oil Company -- Texas City Refinery

Hazardous Waste Stream		Generation Range (1987 - 1990) (Wet Tons/Year)	Management Technique
K048	DAF Float	32,000 - 120,000	Recycle to Coker, Off-site Incineration
K049	Slop Oil Emulsion Solids	0	
K050	Heat Exchanger Solids	50 - 250	Recycle to Coker, Off-site Incineration
K051	API Separator Sludge	8,000 - 15,500	Recycle to Coker, Off-site Incineration
K052	Leaded Tank Bottoms	0	
F037/F038	(Primary/Seconday Sludge)		
	DAF Bottoms	13,000 - 91,000	Recycle to Coker, Off-site Incineration
	Equalization Sludge	0 - 205,000	Landtreat
	Stormwater Storage Sludge		
	Unit Oil/Water Separators	?	Recycle to Coker, Off-site Incineration
	Sewer Lift Stations	?	
TC Wastes	(>30 Streams Identified So Far)		
	Contaminated Soils	5,000 - 172,000	Landtreat
	Sludges	16,000 - 39,000	Recycle to Coker, Landtreat, Incinerate
	Aqueous Waste (Sour Water)	3,500,000 - 4,300,000	Stripping/Reuse, Deep Well Injection

NOTICE
If the filmed image is less clear than this Notice it is due to the quality of the document being filmed.

CD2F 003

0 9 3 8

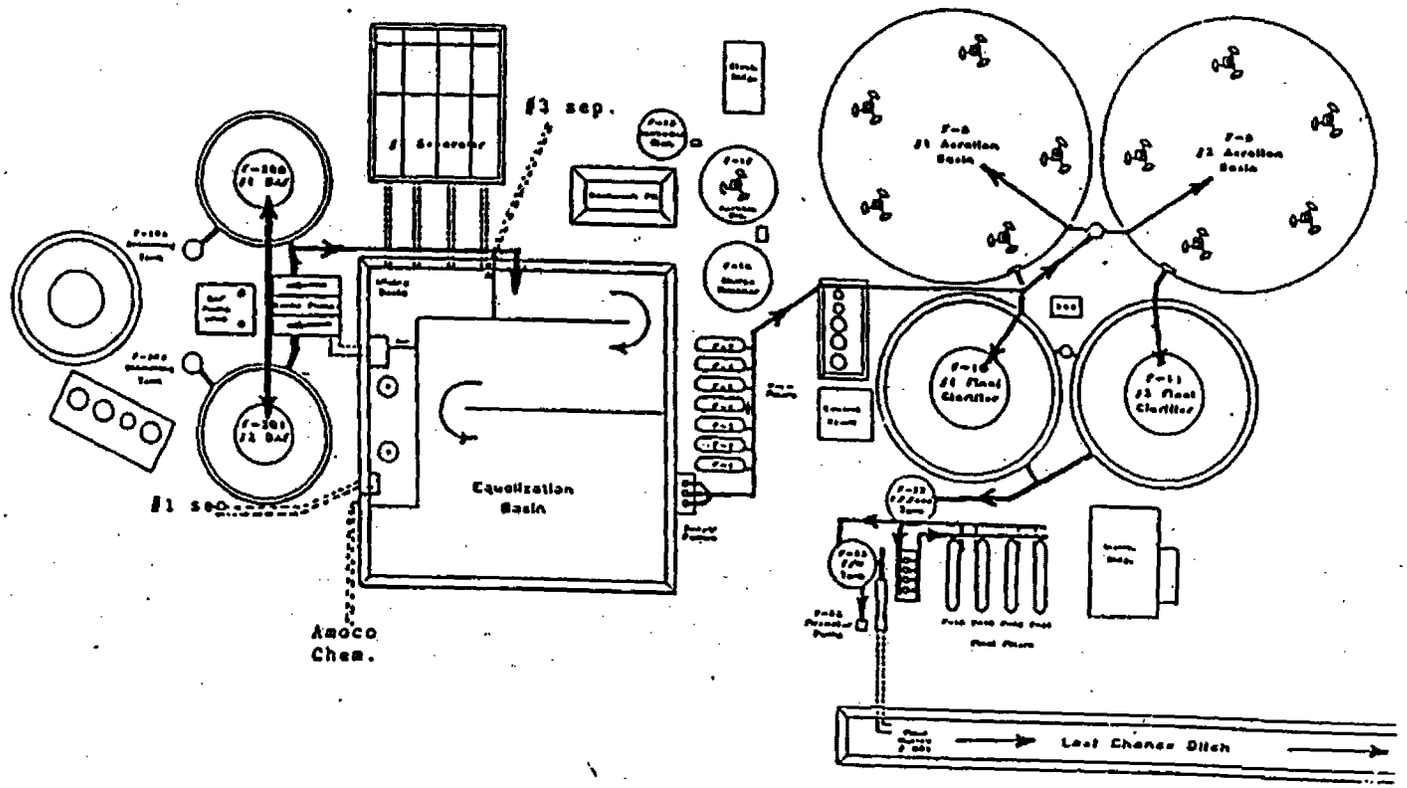

FIGURE 2
Wastewater Treatment Facility

NOTICE
If the filmed image is less clear than this Notice it is due to the quality of the document being filmed.

CD2F 003

0939

NOTICE
If the filmed image is less clear than this Notice it is due to the quality of the document being filmed.

CD2F 003

0 9 4 0

Figure 3. Solid Waste Management
Amoco Oil Company -- Texas City Refinery

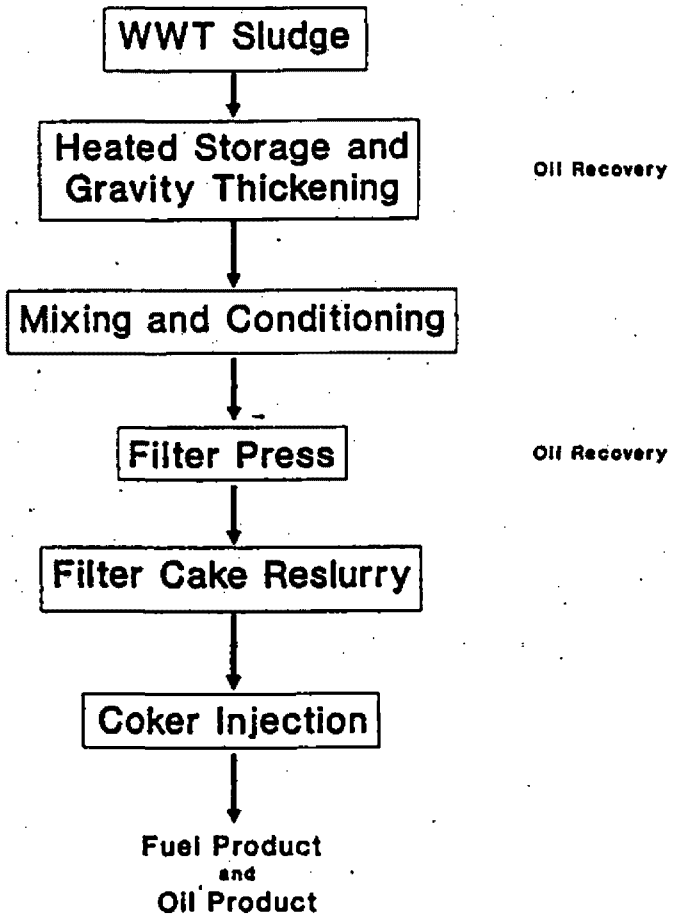

FIGURE 4

Filter Cake Roll-Off Box Status

Amoco Oil Company -- Texas City Refinery

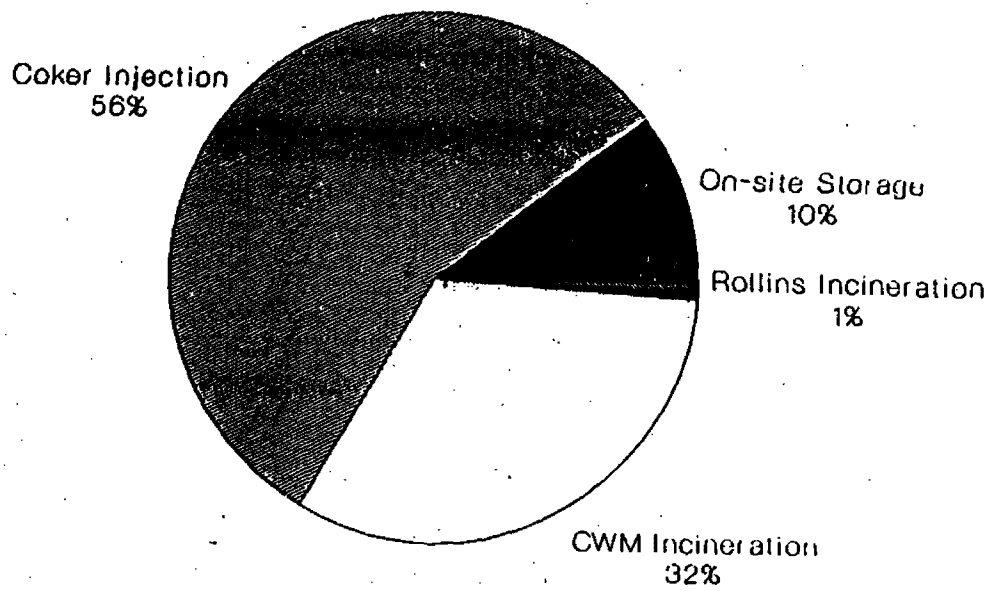

Total Boxes Filled 11/8/90-5/21/91 = 105

NOTICE
If the filmed image is less clear than this Notice it is due to the quality of the document being filmed.

CD2F 003

0 9 4 1

NOTICE
If the filmed image is less clear than this Notice it is due to the quality of the document being filmed.

CD2F 003

0 9 4 2

D.3 Recent Information Submitted by Category 1 Facilities[1]

The refineries that submitted recent information are listed below.

- Hunt Refining (Tuscaloosa, AL)
- Cross Oil and Refining (Smackover, AR)
- Lion Oil (El Dorado, AR)
- Chevron (El Segundo, CA)
- Ultramar (Wilmington, CA)
- Marathon (Robinson, IL)
- Shell Oil (Wood River, IL)
- Amoco (Whiting, IL)
- Total (Arkansas City, KS)
- BP Oil (Belle Chasse, LA)
- Exxon (Baton Rouge, LA)
- Murphy Oil (Meraux, LA)
- Total (Alma, MI)
- Chevron (Pascagoula, MS)
- BP Oil (Lima, OH)
- BP Oil (Marcus Hook, PA)
- Amoco (Texas City, TX)
- Chevron (Port Arthur, TX)
- El Paso Refining (El Paso, TX)
- Exxon (Baytown, TX)
- Shell Oil (Deer Park, TX)
- Shell Oil (Odessa, TX)
- BP Oil (Ferndale, WA)
- Shell Oil (Anacortes, WA)
- Texaco (Anacortes, WA)
- Quaker State (Newell, WV)

---

[1] Two Category 1 facilities have declared their submissions confidential business information (CBI) and therefore their submissions are in the RCRA CBI docket.

F037 AND F038 WASTE CAPACITY ANALYSIS:
DATA USE AND TRACKING SHEET

Refinery: Hunt Refining - Tuscaloosa Refinery
State: Alabama

Data sources available:

- x Petroleum refinery visits/voluntary submission
- x National Survey of Hazardous Waste Treatment, Storage, Disposal, and Recycling Facilities (TSDR survey)
- __ National Survey of Hazardous Waste Generators
- __ Biennial report/state reporting requirements
- __ California hazardous waste data base
- __ Petroleum refinery data base (PRDB)
- __ No-migration petitions
- __ Comments from proposed rule
- x Organic Toxicity Survey

Basis for F037 and F038 waste estimation:

EPA used data provided by Hunt Refinery because it was the most recent and the only source that describes F037 and F038 waste generation and management. Other sources were used only in comparison with the refinery's data submission.

F037 and F038 waste estimates:

F037 (one-time) - 5,900 tons from closure of surface impoundments. These impoundments will be replaced by tanks, which would generate F037 sludges when cleaned out once every two to five years.

Hunt Refining reports no other F wastes than those identified above.

According to more recent information from the TC survey, this facility indicated that it would generate the following quantities of surface impoundment sludges during the indicated time periods:

F037/8 (surface impoundments) - 0 tons (7/92 - 12/92)

F037/8 (surface impoundments) - 2070 tons (1/93 - 12/93)

F037/8 (surface impoundments) - 0 tons (1/94 - 12/94)

NOTICE
If the filmed image is less clear than this Notice it is due to the quality of the document being filmed.

CD2F 003

0943

HUNT REFINING

Hunt Refining
PO Box 1850
Tuscaloosa, AL 35403-1850

June 5, 1991, 3:30 PM

NOTICE
If the filmed image is less clear than this Notice it is due to the quality of the document being filmed.

CD2F 003

0944

REFINERY DESCRIPTION

The Hunt Refinery in Tuscaloosa, Alabama is an integrated facility (i.e., it produces gasoline, diesel fuel, asphalt, etc.) processing 28,000 barrels of crude oil per day, and recycling 9,000 barrels of heavy crude to the coker (45,000 barrels/day crude capacity, according to the Annual Refining Survey in the Oil and Gas Journal published March 18, 1991). Total area covered by the facility is in the neighborhood of 150-175 acres. The refinery was built in 1946; the wastewater treatment plant was built in 1975, and upgraded to an activated sludge system classification by aeration in 1981.

WASTEWATER TREATMENT SYSTEM

In the past, the facility was permitted for a land treatment unit to handle biosludge bottoms and K048. After the implementation of the K048-K052 land ban, the facility could no longer land farm the K048, and instead utilized the Mobil Oil sludge coking process to recycle the K048 sludge (the coker had been built in 1981).

The treatment train includes DAF followed by activated sludge biotreatment followed by clarification. Daily blowdown from the DAF unit (which is an F038 waste) goes to surface impoundment #1, which already contains F037-F038 waste. Surface impoundment #2 would probably also contain both F037 and F038, due to CPI separator sludges it receives. Some oil is skimmed off the surface impoundments and returned to be processed along with crude. There are two accumulation tanks used to recycle K048 to the coker (K048 is batch loaded since not very much is accumulated on a daily basis). Any water drawn off the accumulation tanks goes back to the WWTP for treatment.

Since the 1986 TSDR Survey was conducted, some other modifications have been made, including rerouting the clarifier sludge to the feed stream into the activated sludge unit. At the end of 1989, the Hunt Refining Company decided to cease leaded gas production, therefore K052 is no longer generated. All leaded tanks were taken out of service, cleaned, and tanks are now considered unleaded. ChemWaste Management in Emelle, AL received those leaded tank bottoms in the past.

PETROLEUM REFINING WASTE GENERATION

The facility currently generates approximately 4,500-5,000 barrels (after settling out of water/dewatering) of K048 annually. These wastes are approximately 90% water. Zero K052 is generated because Hunt Refining stopped making leaded gasoline.

The facility anticipates that it will generate 386 tons/year of F037-F038, based on results of sampling and soundings, how long the impoundments have been there, and other parameters. Testing of F037 and F038 revealed the presence of about 18-22 of the Appendix VIII constituents (40 CFR Part 261). The sludges in surface impoundments #1 and #2, which have a thick, oily consistency, are estimated to have densities of 100 lb/cu ft and 65 lb/cu ft, respectively. Surface impoundment #1 is about 15 years old; surface impoundment #2 is about 9.5 years old. Using different assumptions as a means of calculating sludge generation or build-up suggest that the sludge in the two impoundments that would be generated with the one-time cleaning may be in the neighborhood of 4,825-5,900 tons, but the volumes could actually be much higher or much lower.

Hunt Refining has identified some streams that may fail the TCLP, but they are trying to segregate them. The benzene level in a stream entering one of the surface impoundments that feeds the wastewater treatment plant (output of wastewater from surface impoundment to WWTP totalling 274.5 tons/year) has at times exceeded the standard, and due to the mixing rule, the entire content of the surface impoundment would be regulated.

WASTE MANAGEMENT PRACTICES

The new F037-F038 ruling will have a drastic impact on the refinery. The facility is in the decision-making process where sludge handling is concerned. The full four years time span would be highly desirable, and probably necessary.

At this time, the facility is uncertain as to how the land ban will affect the amount of wastes generated. The same amount may be produced, and this may depend on nature of the crude and degree of stormwater separation achievable. The facility will be taking the two surface impoundments out of service and replacing them with tanks (possibly using a combination of 40,000 barrel tanks and an 80,000 barrel tank to allow tank cleaning without interruption of wastewater treatment). The estimated cost for this change is several million dollars. The facility is currently in the process of trying to determine where to place the tanks. These tanks will generate a F037 sludge that will collect at the bottom and will occasionally have to be cleaned from the tank, but it is unknown as to how much or how often. After they clean the surface impoundments, they may be able to better estimate the rate of generation. Hunt Refining has submitted a closure plan for the surface impoundment #2 to Region IV and anticipate that they will have four years to close. The closure plan for surface impoundment #1 will be submitted in October of 1991.

In the past, waste sludge from the #1 clarifier was mixed with K048 wastes and landfarmed, due to the valuable nutrient content (primarily ammonia, phosphorus) which aids biodegradation. Biosludge was also sent to the landfarm for the same reason. The #2 clarifier bottoms are blended on a continual basis with the K048, making all of it a listed waste. The facility is looking at separating these streams, and this is mentioned in the landfarm closure plan. Biosludge adds no value to coker feed whereas it was beneficial to the landfarm, but the facility does not currently have a landfarm for that waste. On March 6, 1991, a delay of landfarm closure was requested. Once approved, the facility intends to begin making the process and equipment changes necessary to segregate the streams and landfarm the biowaste.

Hunt Refining is looking for ways to achieve more wastestream segregation, including segregation of stormwaters. Part of the closure activities for surface impoundment #2 includes further segregation to ease the need for storage. The biggest need for storage space is for stormwater. The majority of stormwater that falls on storage areas in the west part of the facility is drained through a NPDES permitted firewalls and goes to the river. According to the 1986 TSDR, this amounts to 169,354,000 gallons annually. All the stormwater that falls onto the processing section of the facility goes to wastewater treatment.

It is hoped that the one-time generation of F037-F038 from the one-time cleaning of the surface impoundments and F038 from tanks can be recycled to the coker. If this proves to be workable, sludge from future tank cleanings (after the SI's have been replaced by tanks) will also be recycled to the coker. The fact that it is 10-15% oil will make it desirable for recovery in the coker, perhaps saving a million dollars. Although for the large part the facility does not have a choice, it may be easier to treat K048 than F037-F038 in the coker, because it is not as viscous (the K048 being mostly water). The oily silt produced by the stormwater and process wastewater is "messy to deal with", and these F wastes may have to be blended with fuel oil before being recycled in the coker. The facility will probably do away with CPI separators when they build the tank. Less F038 should be generated if CPI separators are eliminated. The CPIs are no longer used very much; they are not well suited for the oily streams.

Hunt Refining has contracted with CH2M Hill to discuss possible modifications.

NOTICE
If the filmed image is less clear than this Notice it is due to the quality of the document being filmed.

CD2F 003

0 9 4 5

TSDR Schematic
Hunt Refining, Tuscaloosa, AL

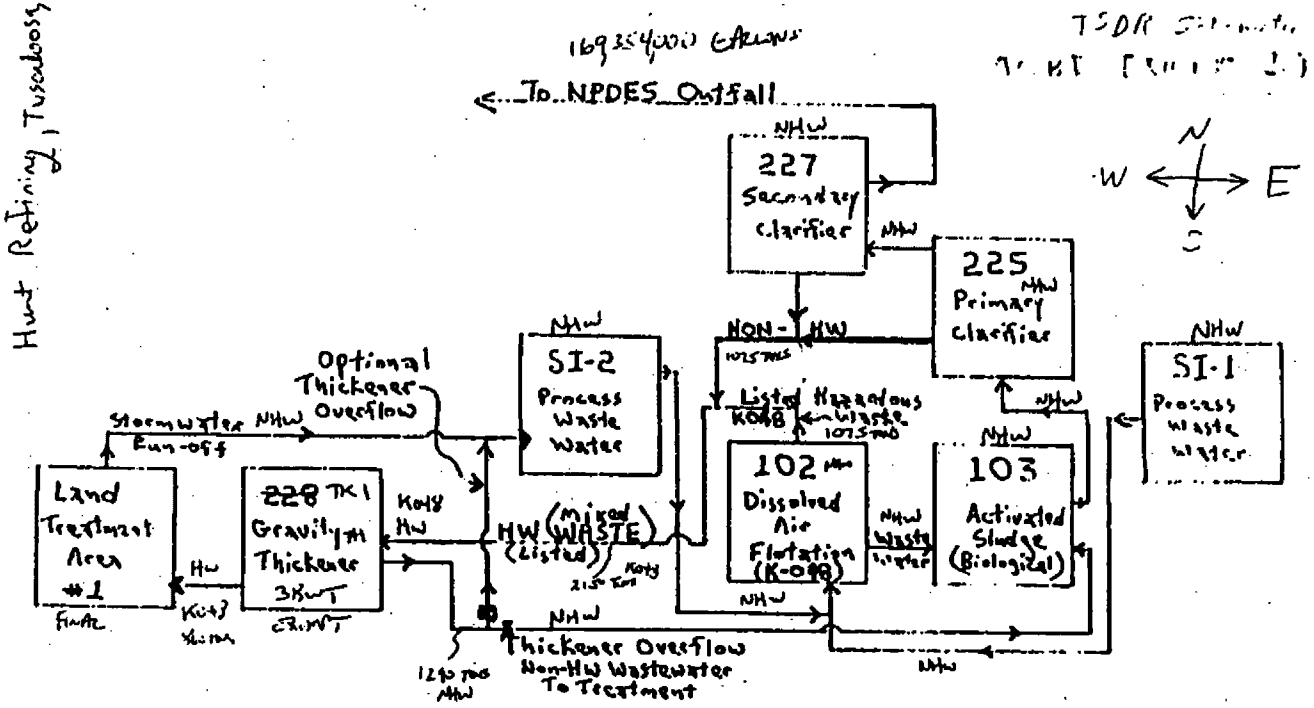

HUNT REFINING COMPANY
Waste Water Treatment
Operation

ALD004009320

000661

NOTICE
If the filmed image is less clear than this Notice it is due to the quality of the document being filmed.

CD2F 003

0946

HUNT REFINING COMPANY
Tuscaloosa, Alabama
WASTEWATER TREATMENT FACILITY

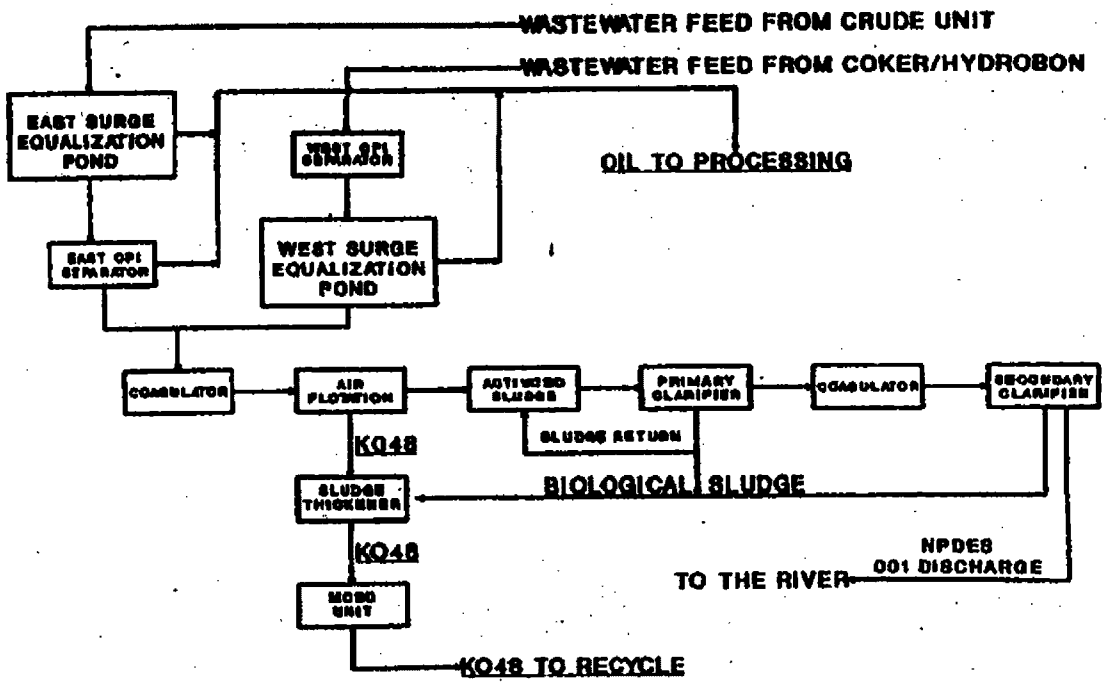

NOTICE
If the filmed image is less clear than this Notice it is due to the quality of the document being filmed.

CD2F 003

0 9 4 L

F037 AND F038 WASTE CAPACITY ANALYSIS:
DATA USE AND TRACKING SHEET

Refinery: Cross Oil - Smackover Refinery
State: Arkansas

Data sources available:

_x_ Petroleum refinery visits/voluntary submission

_x_ National Survey of Hazardous Waste Treatment, Storage, Disposal, and Recycling Facilities (TSDR survey)

__ National Survey of Hazardous Waste Generators

__ Biennial report/state reporting requirements

__ California hazardous waste data base

_x_ Petroleum refinery data base (PRDB)

__ No-migration petitions

Basis for F037 and F038 waste estimation:

EPA used data provided by Cross Oil (Smackover Refinery) because it was the most recent and the only source that describes F037 and F038 waste generation and management. Other sources were used only in comparison with the refinery's data submission.

F037 and F038 waste estimates:

F037 (routine) = 25 tons/year from cleanout of the sewers, surge tank, and clarifiers.

F037 (one-time) = 1 ton generated from closure of stormwater retention ponds. These ponds will be replaced by tanks, which will be cleaned out every two to five years; therefore, the F037 sludge would not be generated continuously.

Cross Oil does not appear to generate any F038 wastes.

NOTICE
If the filmed image is less clear than this Notice it is due to the quality of the document being filmed.

CD2F 003

0948

Cross Oil and Refining
End of East 6th
Smackover, AR 71762

REFINERY DESCRIPTION

Cross Oil and Refining in Smackover, Arkansas is a refinery that produces primarily lube oils, and has the capacity to process 6,770 barrels of crude oil per day according to the Annual Refining Survey in the Oil and Gas Journal published March 18, 1991. The facility produces no gasoline. The refinery is 68 years old, and the total area covered by the facility is 70 acres.

WASTEWATER TREATMENT SYSTEM

Since 1986, some modifications to the wastewater treatment plant have been made. The five-acre collection and retention pond has been eliminated from the treatment train; the only input to the pond is stormwater. In the place of the retention pond, a 500,000 gallon surge tank (equipped with a collection bath) will be used. In addition, the facility has added another clarifier in front of the DAF unit. The driving force behind these modifications was the F037-F038 waste listing. The changes due to the sludge rulings have made it more difficult for the facility to handle swings in process wastewater output; in the past, the retention pond handled the swings.

Future plans include changing the NPDES discharge point, as indicated in a new permit Cross Oil is in the process of receiving.

All process wastewater systems are now segregated from stormwater systems.

PETROLEUM REFINING WASTE GENERATION

Current production rates of K wastes are:

K048	35,000 lb/yr[f]
K049	2,000 lb/yr[f]
K050	1,500 lb/yr[f]
K051	2,500 lb/yr[f]
K052	0 lb/yr

One-time cleanings generate approximately 2,000 lb/yr. The facility estimates that their generation of F037 and F038 sludges will be 50,000 lb/yr, although it has no experience to date.

This facility is unusual in that the wastes do not contain the constituents that caused the refinery sludges to be listed in the first place (e.g., lead, chromium).

How the elimination of the retention pond will affect F037 and K048-K052 waste generation is yet to be determined. When the basin is taken out of the treatment train, this will have an affect on the stream entering the DAF units and thus probably impact K048 waste generation rates. The new system has only been operating for eight weeks, so the facility is still in the learning process. The system has not been down for cleaning since the switch was made, but it is predicted that K048-K052 waste generation will decrease significantly.

NOTICE
If the filmed image is less clear than this Notice it is due to the quality of the document being filmed.

CD2F 003

0949

WASTE MANAGEMENT PRACTICES

K wastes are generated in the DAF unit, which is guesstimated to require cleaning on a yearly basis, and in the API separator, which may require cleaning several times per year. The clarifiers in front of the DAF units are periodically batch cleaned approximately on a weekly basis, generating F037 waste.

Cross Oil now ships K wastes to ChemWaste Management for incineration after dewatering onsite. F037-F038 wastes will accumulate in the 500,000 gallon storage tank and clarifiers, and will have to periodically be cleaned out. These wastes will also be shipped to ChemWaste Management. The BIF rulings will not affect management options.

There are no changes planned as far as treatment is concerned, except that the company is working on reducing the phenol content so the wastes can be landfilled. It appears that one of the water treatment chemicals that is added as a flocking agent is contributing to the problem. Waste sludge from the facility is atypical in that there are only two constituents that cause it to require treatment before landfilling.

At present F037-F038 wastes are less expensive to manage than K048-K052 wastes since they are not yet banned from landfills.

At this time the facility has no plans to remove sludges from the collection and retention pond.

The facility does not think that it is possible to reduce F037-F038 or K048-K052 wastes by putting more of a load on the aggressive biological units.

NOTICE
If the filmed image is less clear than this Notice it is due to the quality of the document being filmed.

CD2F 003

0 9 5 0

Updated Schematic
Cross Oil & Refining, Smackover, AR

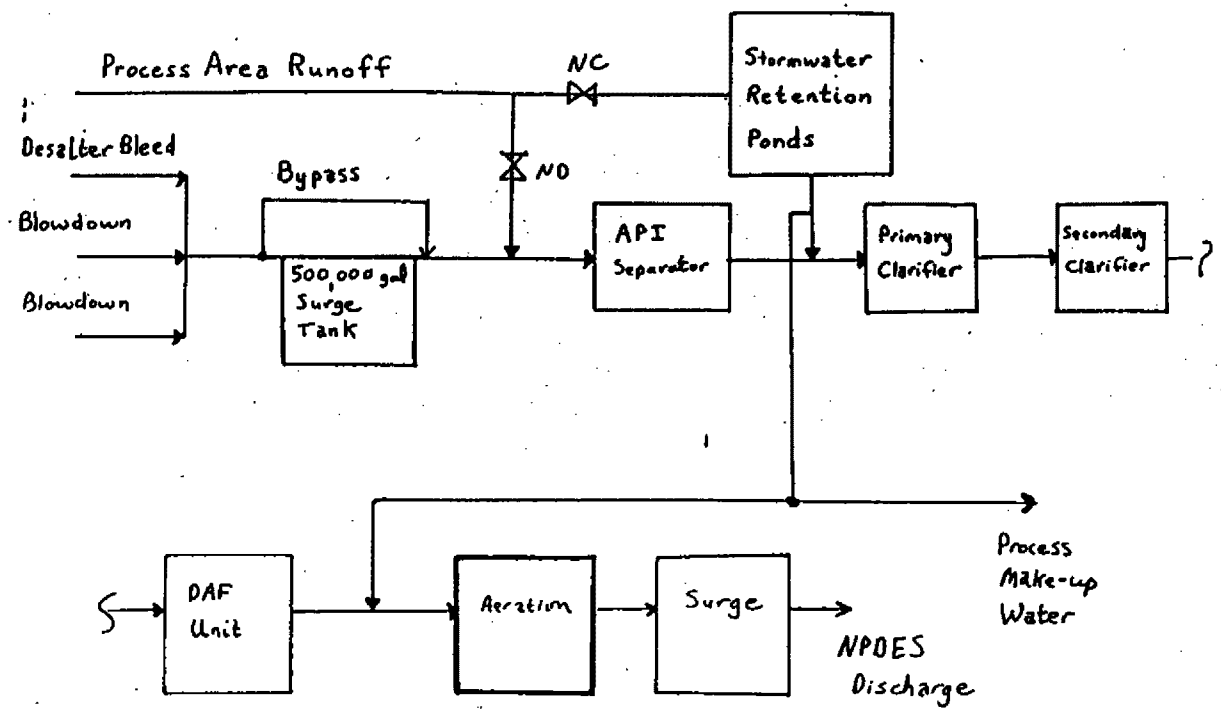

NOTICE
If the filmed image is less clear than this Notice it is due to the quality of the document being filmed.

CD2F 003

0 9 5 1

WASTEWATER TREATMENT FACILITY SCHEMATIC

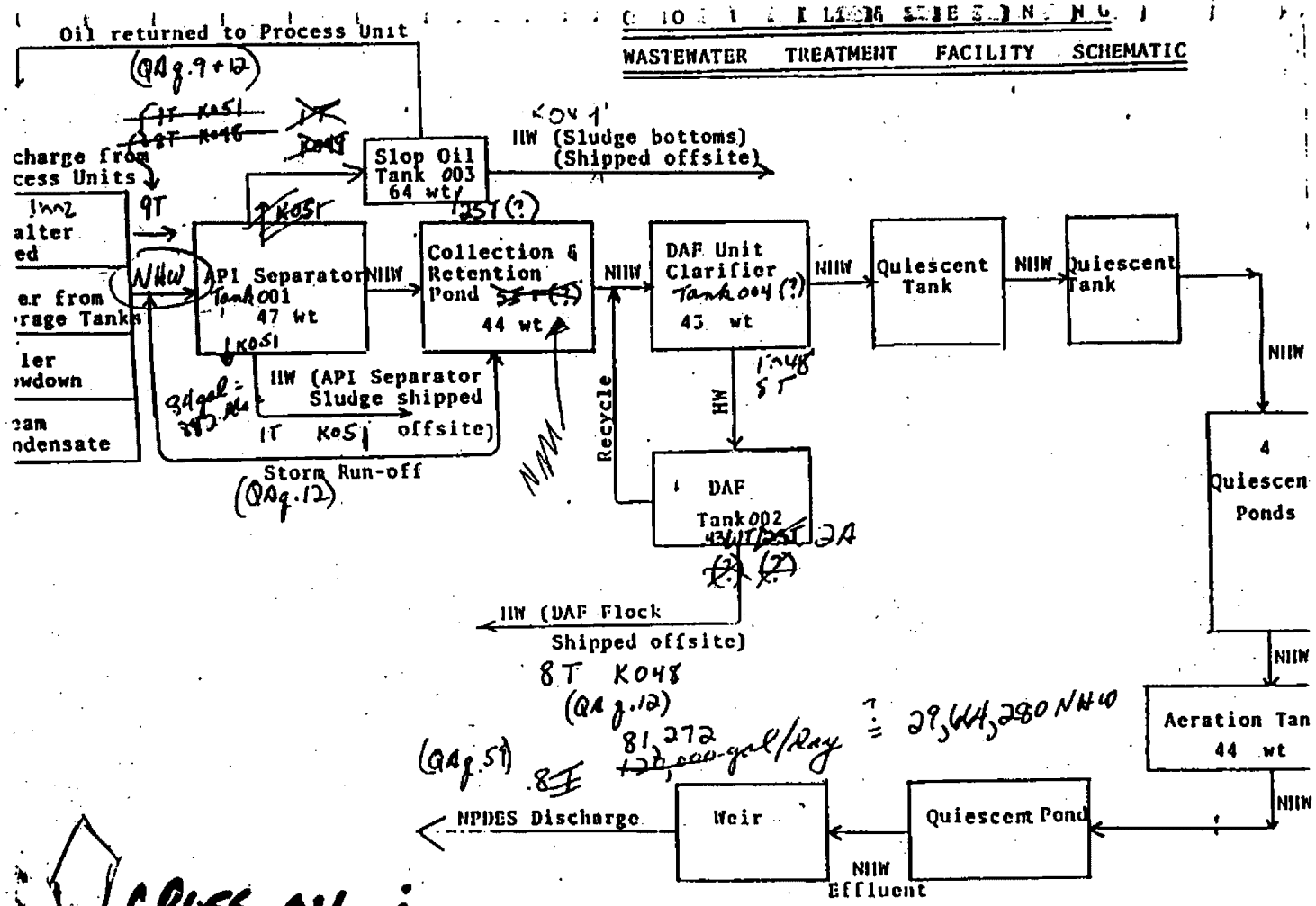

CROSS OIL & REFINING ARD990869737

NOTICE
If the filmed image is less clear than this Notice it is due to the quality of the document being filmed.

CD2F 003

2560

PHONE LOG FOR F037 AND F038 CAPACITY ANALYSIS

CONTACT: E. J. Doherty (Cross Oil, Smackover, AR)

PHONE NUMBER: (501) 725-3611

CALLER: James Hsu

DATE: 9/12/91

SUBJECT: Status of impoundments

They are not using the retention ponds anymore, but they have no plans to clean out the sludges from the retention ponds.

NOTICE
If the filmed image is less clear than this Notice it is due to the quality of the document being filmed.

CD2F 003

0953

F037 AND F038 WASTE CAPACITY ANALYSIS:
DATA USE AND TRACKING SHEET

Refinery: Lion - El Dorado Refinery
State: Arkansas

Data sources available:

_x_ Petroleum refinery visits/voluntary submission

_x_ National Survey of Hazardous Waste Treatment, Storage, Disposal, and Recycling Facilities (TSDR survey)

__ National Survey of Hazardous Waste Generators

__ Biennial report/state reporting requirements

__ California hazardous waste data base

__ Petroleum refinery data base (PRDB)

__ No-migration petitions

Basis for F037 and F038 waste estimation:

EPA used data provided by Lion Oil (El Dorado Refinery) because it was the most recent and the only source that describes F037 and F038 waste generation and management. Other sources were used only in comparison with the refinery's data submission.

F037 and F038 waste estimates:

F037/8 (routine) = 600 tons/year from the equalization basin and sewer cleanouts.

NOTICE
If the filmed image is less clear than this Notice it is due to the quality of the document being filmed.

CD2F 003

0954

NOTICE
If the filmed image is less clear than this Notice it is due to the quality of the document being filmed.

CD2F 003

0955

LION OIL

1000 McHenry St.
El Dorado, AR 71730

REFINERY DESCRIPTION

The Lion Oil refinery in El Dorado, Arkansas is an integrated facility (i.e., it produces gasoline, asphalt, etc.) processing 48,000 barrels of crude oil per day, according to the Annual Refining Survey in the Oil and Gas Journal published March 18, 1991. The total land area of the facility is 391 acres. The refinery was built in the 1920's, and the wastewater treatment system has been in operation since 1977.

WASTEWATER TREATMENT SYSTEM

Exhibit 1 presents the wastewater treatment flow diagram at the Lion Oil refinery as submitted in the TSDR survey in 1986. Since then, some modifications have been made. The storage impoundments were closed out in 1988. A filter press (generating a filter cake) was added to handle K wastes. The equalization basin was replaced with tanks, put into service in April, to handle dry weather process flow.

The facility has three stormwater outfalls, and one WWTP outfall.

PETROLEUM REFINING WASTE GENERATION

The total estimated rate of generation of K048 to K052 is 1,000 tons/year (470,000 G K048 and 128,000 gallons of K051, according to the 1986 TSDR). The facility generates the same amount of K wastes as it did in the past.

Every time the facility cleans a tank, there is a good chance F waste may be generated.

There is no current estimate of F037 and F038 wastes generated, but if one were to just "pick a number", it might be on the order of several hundred tons per year. The company does not yet have a feel for the rate of generation of F038 from the equalization tank, which may require cleaning once every couple of years. If the sludges from the closed storage impoundment were to be removed in future, this would also generate F037. An estimate of one-time wastes residing in SIs, etc., that would be regulated as hazardous if moved, would be 50,000-100,000 tons.

There is no preference as to production of K or F wastes, save for the fact that F wastes are not yet land banned.

There is no waste "stockpiled" per se, but sludges cleaned from ditches, sewers, tanks, and sumps will generate a lot of waste, and the facility does not really know how much will be generated until cleaning is begun.

The secondary treatment waste from aggressive biological units is not a TC waste, but it is a listed K waste by the state of AR because filtrate is returned to the WWTP and the state interprets this to be a mixed waste (although the US EPA does not consider it as such).

WASTE MANAGEMENT PRACTICES

The facility refinery, dewaters the K waste in a filter press, recovers some oil from the filtrate, sends the filtrate water to the wastewater treatment plant, and sends the filter cake to a recycler. The recycler, Marine Shale and Aggregates, burns the wastes in a kiln.

In addition to the filter press, some paving has been employed to keep dirt out of the sewers and thus lessen the volumes of K wastes generated. In order to further reduce volume, to meet the land ban, [and] to lessen the economic impact, the facility is considering installing a dryer for the filter cake.

The various wastewater treatment tanks (e.g., DAF, equalization tanks, slop oil tanks) are cleaned once every couple of years.

F wastes will be mixed with K wastes and also be sent to Marine Shale to be burned. In order to handle the F wastes, the facility may have to run two shifts (rather than the current one eight-hour/day shift). The Btu content (1,500 Btu/lb) of the K and F wastes is not high enough for cement kilns. If Lion Oil decided to install the proposed drier, Btu content would be raised (but not to the required 5,000 Btu/lb for cement kilns). Characteristics of the currently generated and stockpiled wastes are similar to the K wastes, which pass TCLP.

Treating to meet the land ban requirement has been considered. The problem is labs can't analyze down to land ban standards due to oil and grease content (i.e., the detection limits are higher than the land ban standards). Lion Oil thinks they could treat to meet the standards, but can't prove that they could do so.

The facility is currently in the process of obtaining a Part B post-closure permit work plan to address the problem of residual waste sludges that will be generated from one-time cleaning. In the past, dry weather flow generated some wastes that will probably need to be removed. The volumes generated in this cleaning are not known.

The facility is in the process of segregating sewage waters in order to decrease volumes of F and K wastes generated. Measures they are taking to reduce F and K waste generation include paving roads, keeping sand blast out of sewer system, and general improvement in housekeeping practices.

Offsite treatment options are limited. The wastes do not meet the Btu requirements for cement kilns. In addition, Boiler and Industrial Furnace (BIF) rulings may possibly affect the available capacity. Contractors they have contacted, such as Chem Waste Management and Rollins, are either running at full capacity or the equipment is not operating properly. The cost of off-site incineration is prohibitive as well; the "red tape" required for on-site incineration keeps it from being worth the hassle.

NOTICE
If the filmed image is less clear than this Notice it is due to the quality of the document being filmed.

CD2F 003

0956

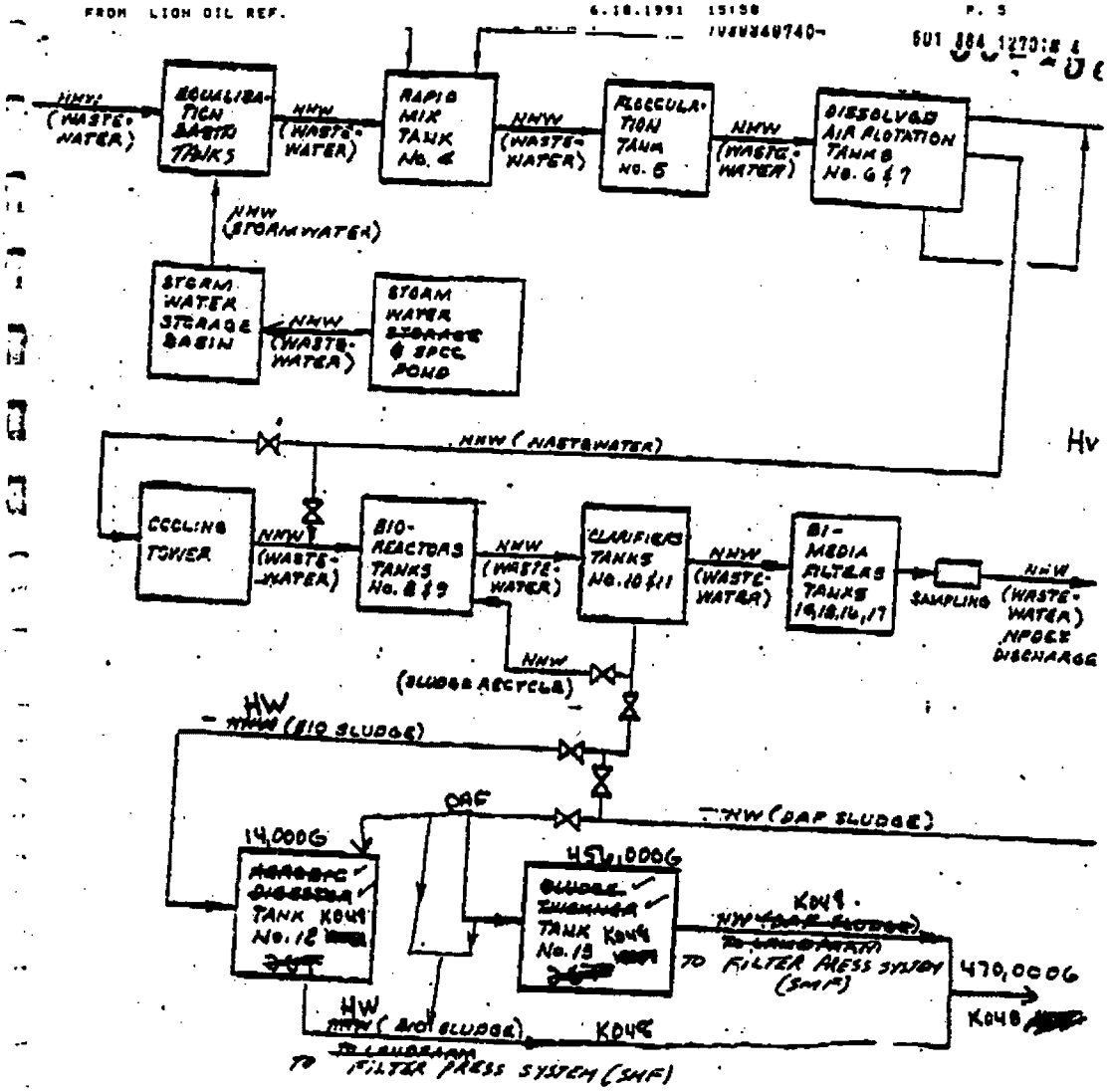

LION OIL REFINERY
DETAILED SCHEMATIC No. 3
WASTEWATER TREATMENT
TANKS No. 4-17

ARD000021978

NOTICE
If the filmed image is less clear than this Notice it is due to the quality of the document being filmed.

CD2F 003

0957

NOTICE
If the filmed image is less clear than this Notice it is due to the quality of the document being filmed.

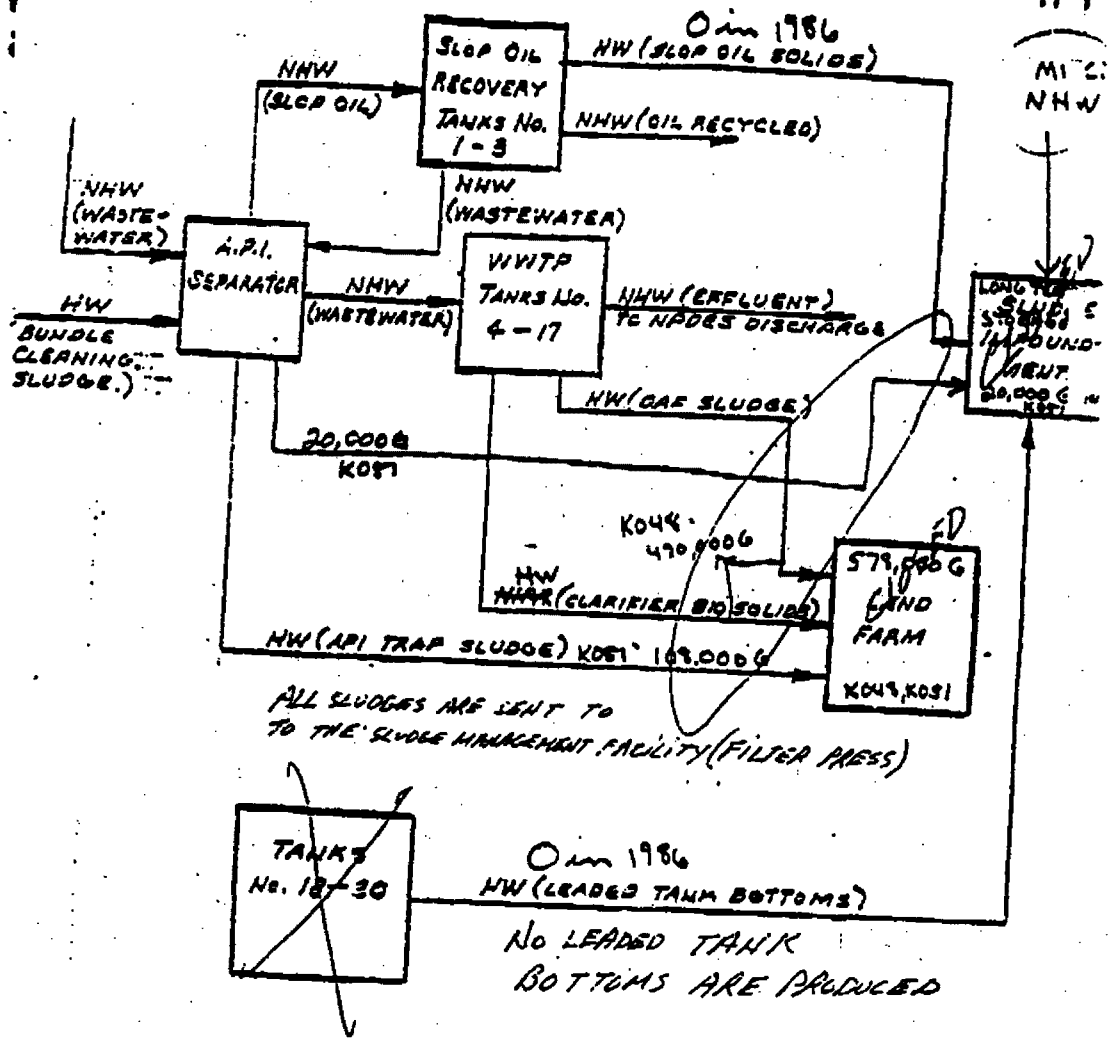

LION OIL REFINERY
FACILITY SCHEMATIC No. 1
ARD000021998

CD2F 003
0958

001458

NOTICE
If the filmed image is less clear than this Notice it is due to the quality of the document being filmed.

CD2F 003

0959

No leaded tank bottoms are produced.

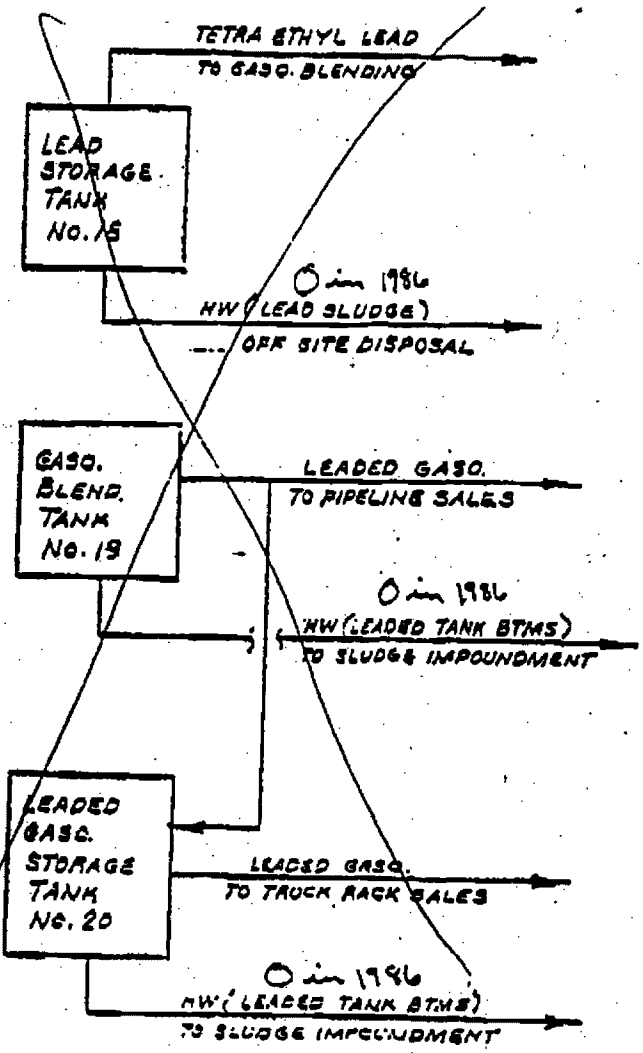

LION OIL REFINERY
DETAILED SCHEMATIC No. 4
LEADED TANK BOTTOMS
TANKS No. 18-20

AR000021998

00145

NOTICE
If the filmed image is less clear than this Notice it is due to the quality of the document being filmed.

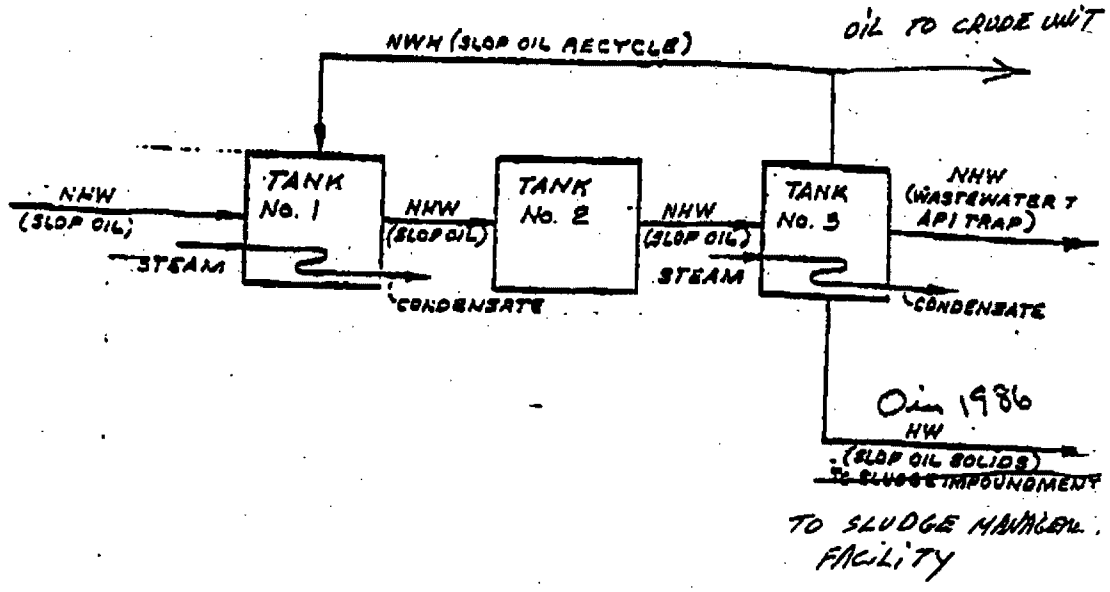

LION OIL REFINERY
DETAILED SCHEMATIC No. 2
SLOP OIL RECOVERY
TANKS No. 1-3
ALD000021998

CD2F 003

0960

001453

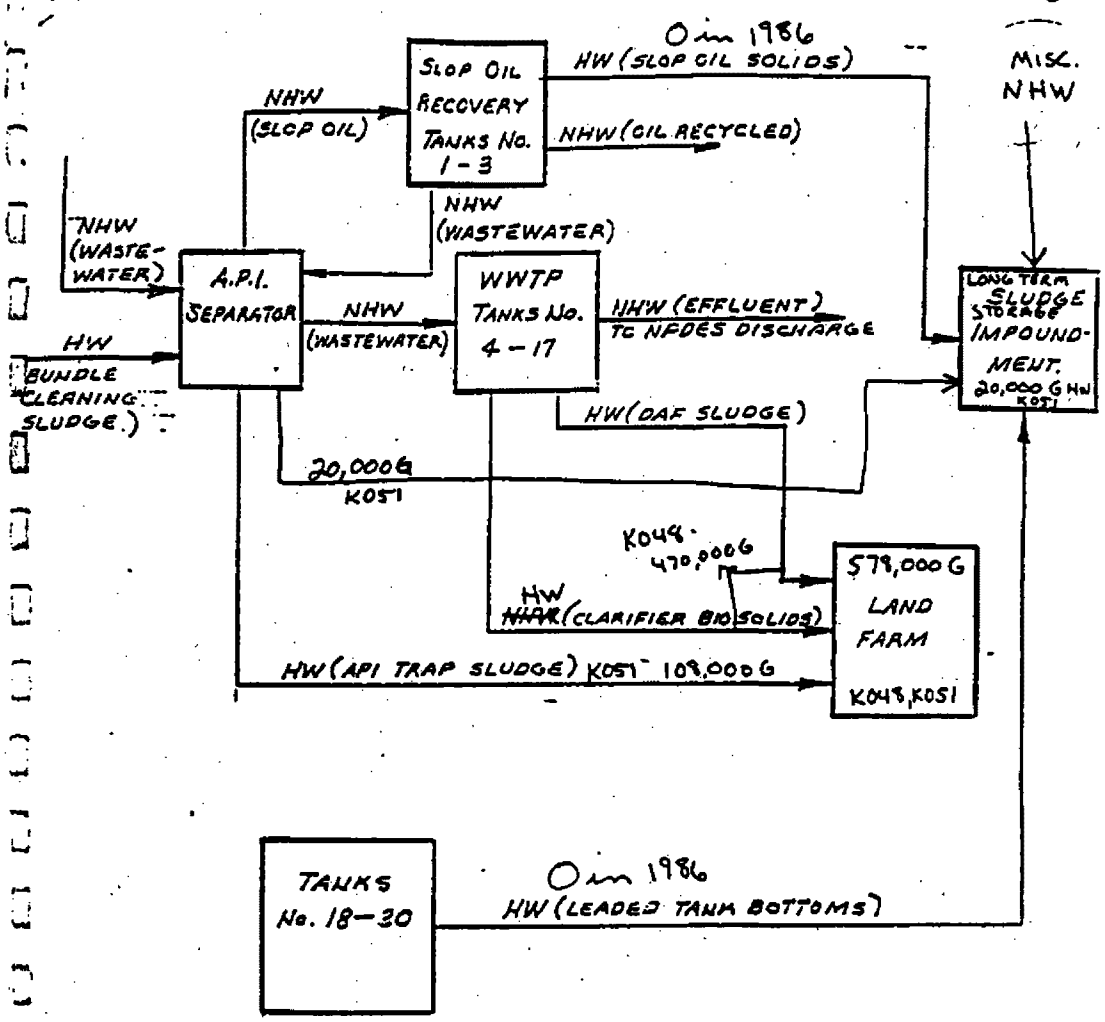

(old)

LION OIL REFINERY

FACILITY SCHEMATIC No. 1

ARD000021998

NOTICE
If the filmed image is less clear than this Notice it is due to the quality of the document being filmed.

CD2F 003

0961

001458

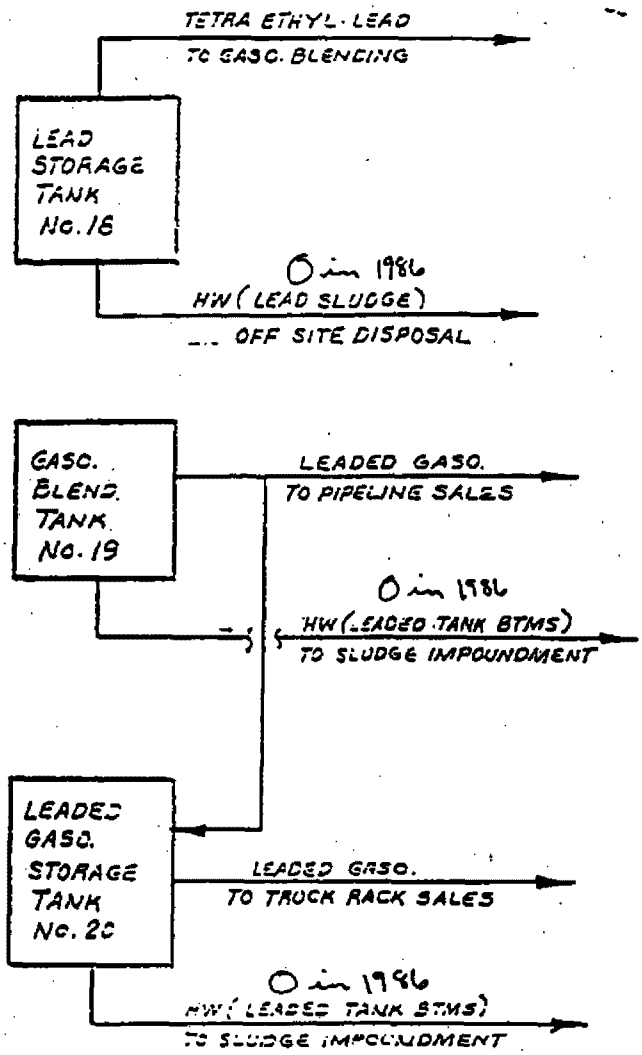

LION OIL REFINERY
DETAILED SCHEMATIC No. 4
LEADED TANK BOTTOMS
TANKS No. 18-20

AR000021998

NOTICE
If the filmed image is less clear than this Notice it is due to the quality of the document being filmed.

CD2F 003

0962

001458

NOTICE
If the filmed image is less clear than this Notice it is due to the quality of the document being filmed.

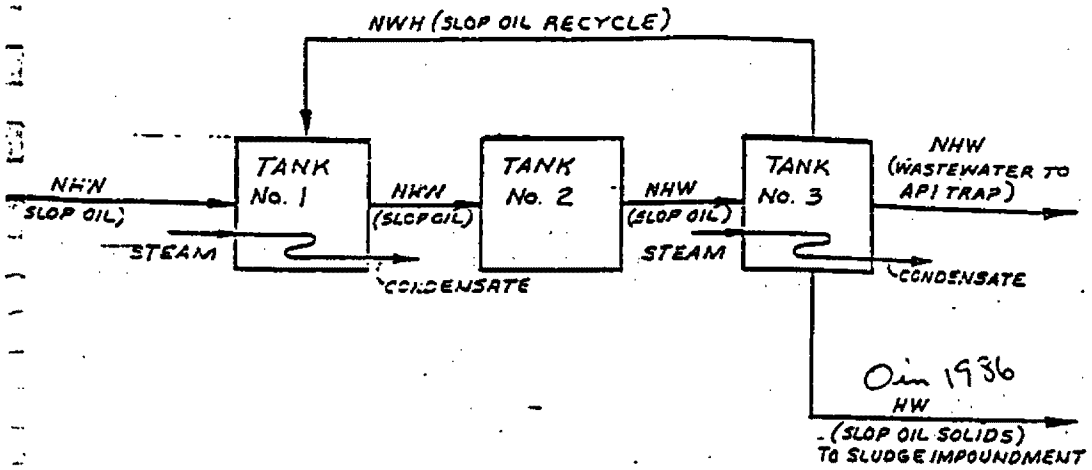

CD2F 003

0 9 6 3

LION OIL REFINERY
DETAILED SCHEMATIC No. 2
SLOP OIL RECOVERY
TANKS No. 1-3
AL0000021998

PHONE LOG FOR F037 AND F038 CAPACITY ANALYSIS

CONTACT: Chuck Hammock (Lion Oil, El Dorado, AR)

PHONE NUMBER: (501) 862-8111

CALLER: James Hsu

DATE: 9/12/91

SUBJECT: Status of impoundments

Mr. Hammock indicated that the refinery has submitted a workplan for a Part B post-closure permit to address waste sludges that will be generated from a one-time cleaning of the impoundment. They replaced the impoundment with tanks. Mr. Hammock indicated that waste sludges probably accumulate in the tanks. He also indicated that they will be closing a diversion pond and replacing it with tanks. He does not have an estimate of wastes sludges quantities from diversion pond clean out.

NOTICE
If the filmed image is less clear than this Notice it is due to the quality of the document being filmed.

CD2F 003

0964

F037 AND F038 WASTE CAPACITY ANALYSIS:
DATA USE AND TRACKING SHEET

Refinery: Marathon Petroleum - Robinson Refinery
State: Illinois

Data sources available:

_x_ Petroleum refinery visits/voluntary submission

_x_ National Survey of Hazardous Waste Treatment, Storage, Disposal, and Recycling Facilities (TSDR survey)

__ National Survey of Hazardous Waste Generators

__ Biennial report/state reporting requirements

__ California hazardous waste data base

_x_ Petroleum refinery data base (PRDB)

_x_ No-migration petitions

Basis for F037 and F038 waste estimation:

EPA used data provided by Marathon Petroleum (Robinson Refinery) because it was the most recent and the only source that describes F037 and F038 waste generation and management. Other sources were used only in comparison with the refinery's data submission.

F037 and F038 waste estimates:

F037 (routine) = 50 tons/year from sewer cleanouts.

Marathon Petroleum reports no other F waste than that identified above.

NOTICE
If the filmed image is less clear than this Notice it is due to the quality of the document being filmed.

CD2F 003

0965

'91-08-07 13:35 MOC ROBINSON ENVIRO P.001

MARATHON OIL COMPANY
ILLINOIS REFINING DIVISION
ENVIRONMENTAL DEPARTMENT
ROBINSON, ILLINOIS 62454
PHONE (618) 544-2121
TELEFAX (618) 544-8116,
ALT. 544-2735

☒ ROUTINE ☐ URGENT, DELIVER IMMEDIATELY

DATE/TIME: AUGUST 7, 1991 1:30PM

TO: MARY COMPTON

COMPANY: ICF, INC.

TELEFAX NUMBER: 703-218-2669

FROM: DAVID SAAD

We are transmitting 3 pages including this cover page

If transmission is incomplete, call (618) 544-2121, Ext. 534, or Ext._____

COMMENTS: THE F037/F038 QUESTIONNAIRE CONTAINED TWO ERRORS (1) K048-K052 generation rate IS 2000 TONS per year and (2) WASTEWATER FLOW DIAGRAM HAS BEEN REVISED. SEE Attached SHEETS.

NOTICE
If the filmed image is less clear than this Notice it is due to the quality of the document being filmed.

CD2F 003

0966

NOTICE
If the filmed image is less clear than this Notice it is due to the quality of the document being filmed.

CD2F 003

0967

F037/F038 Questions

(1.0) **Waste Water Treatment Facility**

1.1 See attached schematic.
1.2 Sewers are combined.
1.3 All process waters rerouted to inlet to API separator.
1.4 F037/F038 regulations.
1.5 Replace existing activated sludge system with above grade tankage.
1.6 TCLP regulations.
1.7 K048-K052 waste streams are now shipped off-site for incineration, prior treatment was conducted on-site at the land treatment facility.

(2.0) **K048-K052 and TC Wastes**

2.1 K048-K052 generation rate is ~~200~~ 2000 ton per year and TC waste is > 10,000 ton per year.
2.2 K-Waste streams are incinerated off-site and TC wastes are applied to on-site land treatment facility. BDAT treatment system will be incorporated into our system.
2.3 None
2.4 None
2.5 None
2.6 None
2.7 Waste Generated are dewatered and low Btu value.
2.8 Unknown at this time.
2.9 None

(3.0) **F037 and F038 Wastes**

3.1 < 50 ton per year.
3.2 None
3.3 N.A.
3.4 ----
3.5 On-site land treatment, land ban will require off-site disposal.
3.6 Capacity Available.
3.7 N.A.
3.8 No

(4.0) **General**

4.1 Incineration
4.2 Source Control
4.3 Unknown
4.4 No
4.5 0-2 times per year.

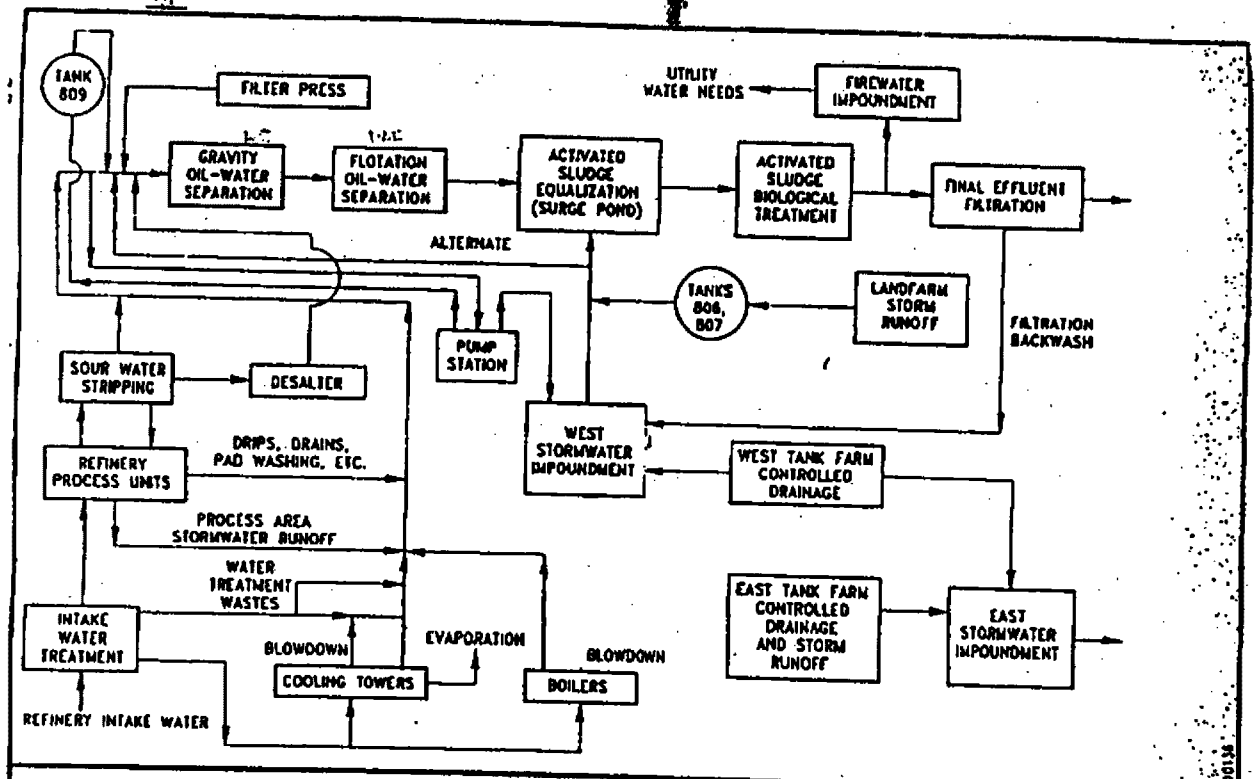

FLOW DIAGRAM
WASTEWATER MANAGEMENT SYSTEM
MARATHON OIL COMPANY
ROBINSON, ILLINOIS

NOTICE
If the filmed image is less clear than this Notice it is due to the quality of the document being filmed.

CD2F 003

0 9 6 8

Illinois Refining Division

Marathon Oil Company

Robinson, Illinois 62454
Telephone 618/544-2121

NOTICE
If the filmed image is less clear than this Notice it is due to the quality of the document being filmed.

July 9, 1991

Ms. Mary Compton
ICF Corporation
9300 Lee Highway
Fairfax, VA 22031-1207

RE: F037/F038 Questionnaire

Dear Ms. Compton:

Please find enclosed the completed questionnaire regarding F037/F038.

Sincerely,

David R. Saad
Environmental Coordinator

DRS:ckm

Enclosure

cc: File

CD2F 003

0 9 6 9

NOTICE
If the filmed image is less clear than this Notice it is due to the quality of the document being filmed.

CD2F 003

0970

F037/F038 Questions

(1.0) Waste Water Treatment Facility

1.1 See attached schematic.
1.2 Sewers are combined.
1.3 All process waters rerouted to inlet to API separator.
1.4 F037/F038 regulations.
1.5 Replace existing activated sludge system with above grade tankage.
1.6 TCLP regulations.
1.7 K048-K052 waste streams are now shipped off-site for incineration, prior treatment was conducted on-site at the land treatment facility.

(2.0) K048-K052 and TC Wastes

2.1 K048-K052 generation rate is 200 ton per year and TC waste is > 10,000 ton per year.
2.2 K-Waste streams are incinerated off-site and TC wastes are applied to on-site land treatment facility. BDAT treatment system will be incorporated into our system.
2.3 None
2.4 None
2.5 None
2.6 None
2.7 Waste Generated are dewatered and low Btu value.
2.8 Unknown at this time.
2.9 None

(3.0) F037 and F038 Wastes

3.1 < 50 ton per year.
3.2 None
3.3 N.A.
3.4 ----
3.5 On-site land treatment, land ban will require off-site disposal.
3.6 Capacity Available.
3.7 N.A.
3.8 No

(4.0) General

4.1 Incineration
4.2 Source Control
4.3 Unknown
4.4 No
4.5 0-2 times per year.

$\frac{67 \text{ tons solid}}{0.1} = 670$ tons

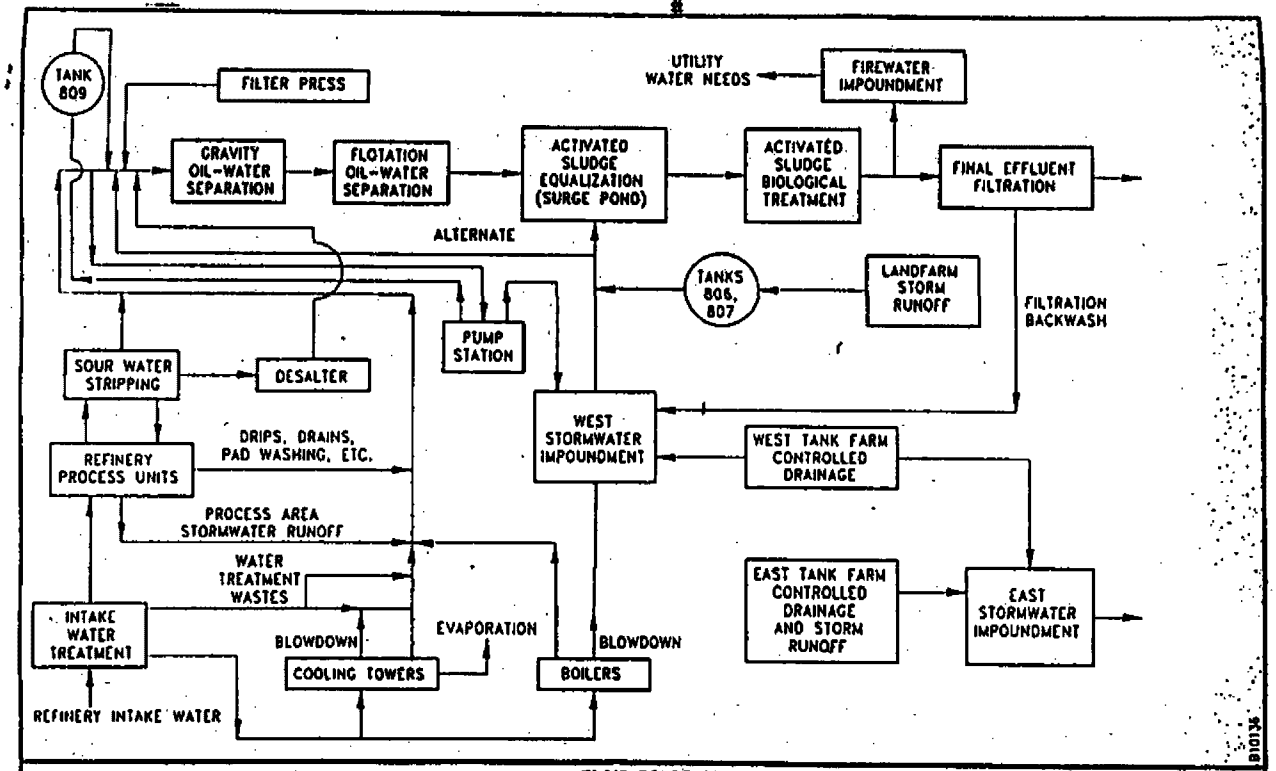

FLOW DIAGRAM
WASTEWATER MANAGEMENT SYSTEM
MARATHON OIL COMPANY
ROBINSON, ILLINOIS

NOTICE
If the filmed image is less clear than this Notice it is due to the quality of the document being filmed.

CD2F 003

0 9 7 1 1

F037 AND F038 WASTE CAPACITY ANALYSIS:
DATA USE AND TRACKING SHEET

Refinery: Shell Oil - Wood River Refinery
State: Illinois

Data sources available:

_x_ Petroleum refinery visits/voluntary submission

_x_ National Survey of Hazardous Waste Treatment, Storage, Disposal, and Recycling Facilities (TSDR survey)

__ National Survey of Hazardous Waste Generators

__ Biennial report/state reporting requirements

__ California hazardous waste data base

_x_ Petroleum refinery data base (PRDB)

__ No-migration petitions

Basis for F037 and F038 waste estimation:

EPA used data provided by Shell Oil (Wood River Refinery) because it was the most recent and the only source that describes F037 and F038 waste generation and management. Other sources (e.g., TSDR Survey, PRDB) were used only in comparison with the refinery's data submission.

F037 and F038 waste estimates:

F037 (routine) - 2,000 tons/year of dewatered CPI separator cake. The waste prior to dewatering amounts to 65,700 tons/year. This non-dewatered waste was calculated assuming the reported 30 gallons/minute is produced continuously (i.e., 365 days/year) and weighs 8.3 lbs/gal. The dewatered cake was estimated using the generation of 3 tons per day of filter cake consisting of 60 percent solids as reported by Shell and assumed the addition of lime amounting to 10 percent of the total weight of solids.

F037 (one-time) - 2,000 tons from clean out of equalization pond. This estimate is based on the 13,000 tons generated when the pond was cleaned out in 1987 (it had not been cleaned since its construction in 1955). Therefore, approximately 400 tons of sludge accumulates in the pond each year. Assuming that the pond will be cleaned out before May 1992 (i.e., five years of accumulation), then 2,000 tons of sludge will be generated.

NOTICE
If the filmed image is less clear than this Notice it is due to the quality of the document being filmed.

CD2F 003

0912

PHONE LOG FOR F037 AND F038 CAPACITY ANALYSIS

CONTACT: Eric Peterson/Jay Rankin (Shell Oil, Wood River, IL)

PHONE NUMBER: (618) 254-7371

CALLER: James Hsu

DATE: 9/6/91 and 9/17/91

SUBJECT: F037/8 waste generation and management

The refinery's wastewater treatment system comprises the following units:

Neutralization -- Bar screen -- CPI separators -- DAF units -- Diversion tank -- equalization pond -- trickling filter -- activated sludge -- secondary clarification -- sludge thickener -- lagoons -- NPDES outfall

The CPI separators generate an F037 waste, which is removed at 30 gallons/minute. This waste is dewatered using a plate and frame filter press resulting in filter cake consisting of 60 percent solids. The dry weight of the filter caked is 2 to 3 tons/day. The estimated maximum heating value of the cake is approximately 2,500 btu/lb.

The equalization pond was put in service in 1955, and was cleaned in 1987. This cleaning generated approximately 13,000 tons. The equalization pond will be replaced by tankage in the future.

Shell Oil, Wood River, does not have an estimation of how much F wastes would be generated from sewer cleanout.

Currently F wastes are dewatered and sent off site to a hazardous waste landfill. Once the F waste land ban becomes effective, the F wastes would be sent off site for incineration.

NOTICE
If the filmed image is less clear than this Notice it is due to the quality of the document being filmed.

CD2F 003

0 9 1 3

F037 AND F038 WASTE CAPACITY ANALYSIS:
DATA USE AND TRACKING SHEET

Refinery: Total Petroleum - Arkansas City
State: Kansas

Data sources available:

_x_ Petroleum refinery visits/voluntary submission

_x_ National Survey of Hazardous Waste Treatment, Storage, Disposal, and Recycling Facilities (TSDR survey)

__ National Survey of Hazardous Waste Generators

__ Biennial report/state reporting requirements

__ California hazardous waste data base

_x_ Petroleum refinery data base (PRDB)

__ No-migration petitions

Basis for F037 and F038 waste estimation:

EPA used data provided by Total Petroleum (Arkansas City, KS) because it was the most recent and the only source that describes F037 and F038 waste generation and management. Other sources were used only in comparison with the refinery's data submission.

F037 and F038 waste estimates:

In Total Petroleum's voluntary submission, they did not have an estimate of F037 and F038 waste generation; however, their schematic shows that an IAF unit is in operation. Assuming they included the F038 sludge from the IAF unit in their total combined K waste generation of 400 to 500 tons/year, then continuous F038 waste generation from the IAF unit can be estimated at 250 tons/year. This estimate is obtained by assuming the IAF unit generates as much F038 waste as the DAF unit generates K048 wastes. It does not appear from the schematic that any other F waste generation occurs.

NOTICE
If the filmed image is less clear than this Notice it is due to the quality of the document being filmed.

CD2F 003

0974

Information Guideline Interview
Total Petroleum, Inc.
1400 S. M St.
Arkansas City, Kansas 67005-3568
(316) 442-5100

July 3, 1991, 2:15 pm
Conversation with Patricia Morgan, Environmental Specialist
Conducted by Mary Compton

Land Area: 300 acres
Refinery Age: 74 years

1.0 Waste Water Treatment Facility

1.1 What is your current configuration (schematic)?

To be sent.

1.2 How segregated is your system, stormwater vs. process water?

50% of the stormwater goes to stormwater drainage, 50% goes to process water drainage; 100% of process water goes to process water drainage.

1.3 What modifications have been made in the last 5 years?

In 1988 a drainage ditch was built and sealed with cement so that the storm water now goes directly to the outfall. Levelling and surveying of surfaces are continuous activities in an effort to segregate the stormwater. Cementing is taking place within units to get rid of dirt in contaminated materials. Three of the ponds (including aerated units 3a and 3b) were cleaned and closed two hazardous waste surface impoundments in 1986. Ponds 1a and 1b were cleaned as was part of oxidation pond 2. Pond 3 was separated into ponds 3a and 3b. Aeration was added to 3a to insure active biological treatment. A surge control tank was installed before pond 3 to catch oil surges before they enter the system.

1.4 What were the driving forces behind these modifications?

An effort to reduce the amount of water going to the API and, for financial reasons, an effort to generate less K wastes.

1.5 What future modifications are planned?

The cementing of the units and road grading and levelling will continue. Lift pumps will be added at the lower units to pump stormwater to the stormwater ponds. A general waste minimization policy is being implemented at the plant.

1.6 What are the driving forces behind these modifications?

To reduce the load on the API and to reduce the expense to the facility of treating hazardous waste.

1.7 How have the K048-K052, TC, and F037/F038 rulings and land bans affected the facility in terms of modifications, operation, capacity, etc.?

NOTICE
If the filmed image is less clear than this Notice, it is due to the quality of the document being filmed.

CD2F 003

0 9 7 5

Class 1 and 3 modifications were required for the RCRA permit as pond 3 contains TC wastes. A centrifuge was previously used to dewater the wastes. Now a filter press is used on site for dewatering and the wastes are sent off site for incineration. The K wastes are currently being incinerated and other options (such as recycling to a cement kiln) are being explored. The lagoons were cleaned prior to the effective date of the land ban so that these wastes could be land treated. Aeration was added to the 3a lagoon and an extra aerator was added in case of down time on the first so that this unit would be considered aggressive biological treatment.

2.0 K048-K052 and TC Wastes

2.1 What is your estimated rate of generation and land disposal of K048-K052 and TC wastes?

None are land disposed. Approximately 400-500 tons of these wastes combined are generated. The TC wastes are only a small portion of this number as only one source of TC wastes exists.

2.2 How do you currently treat, recycle, or dispose of these wastes and are there any foreseeable changes in the treatment, recycling, or disposal?

The wastes were sent through a centrifuge for de-oiling and de-watering. However, because they were still fairly high in water content a filter pressing step was added and the wastes are sent off site for incineration.

2.3 How have the waste generation rates changed with the hazardous waste ruling and land ban?

They have not changed and the assumption is that they will remain the same. Although filtering reduces the volume of the wastes, the addition of the filter aid negates this reduction. Waste minimization efforts have reduced waste volume but the listing of additional wastes has resulted in no net change in waste generation.

2.4 Have there been any upstream or waste water treatment facility operating changes to reduce the amount of these wastes generated and how effective are these changes?

Zero-sample draw valves have been added and are very effective as they have a continuous purging system, eliminating the need to flush the valves prior to taking a sample. Efforts are being made to dry-clean the units whenever possible to remove uncontaminated sand and debris prior to washing with water. The sludge control tank was added to help keep oil out of the ponds and reduce the amount of benzene.

2.5 Will the proposed F037 and F038 land ban affect the amount of these wastes produced?

No.

2.6 How much of these wastes are stockpiled in containers or surface impoundments?

All of it is in surface impoundments, not in containers. An estimate of the relevant quantity is not available. Since the impoundments were cleaned last summer the amount is probably relatively small.

2.7 What are the chemical and physical characteristics of the currently generated and stockpiled wastes (i.e., are they dewatered, do they have significant btu value, etc.)?

According to the TC test, these wastes are not hazardous. The pond bottoms are not classified as TC wastes. The btu value fluctuates, but for the F037 and F038 wastes, the btu value is less than

NOTICE
If the filmed image is less clear than this Notice it is due to the quality of the document being filmed.

CD2F 003

0 9 7 6

5000.

2.8 How will these characteristics change with any planned facility modifications and operating changes?

The answer to this question is not clear at this point in time.

3.0 F037 and F038 Wastes

3.1 Is there a current estimate of the amount of F037 and F038 wastes generated?

No.

3.2 Is there an estimate of the amount of F037 and F038 wastes stockpiled in containers or surface impoundments?

No.

3.3 What are you currently doing with the stockpiled waste and what are your future plans?

There are apparently no stockpiled F037 and F038 wastes.

3.4 What are the chemical and physical characteristics of both the currently generated and the stockpiled wastes?

According to previous tests, none of the wastes are hazardous by TCLP.

3.5 What is your current treatment, recycle, and disposal methods in relationship to F037 and F038 wastes?

In the past all of these wastes were treated and land farmed. In the future they will be incinerated off site.

3.6 What are the capacities of these treatment, recycle and disposal methods in relationship to F037 and F038 wastes?

The answer to this is not clear at this point. It appears that there could be shortcomings in treatment capacity.

3.7 Are there any planned changes, either physical or operational, to deal with the land ban and how will these changes affect K048-K052 waste generation?

Physical changes include continuing unit segregation, cementing the units, and roadgrading. Operational changes include completing installation of the Zero-sample draw valves and recycling the samples taken and putting them back into the system for treatment.

3.8 Is it possible to reduce F037/F038 or K048-K052 wastes by putting more of a load on the aggressive biological units?

Probably not.

4.0 General

4.1 What are your offsite treatment options and are there unique features of your waste that

NOTICE
If the filmed image is less clear than this Notice it is due to the quality of the document being filmed.

CD2F 003

0 9 7 7

would limit the treatability options?

The only offsite option currently is incineration, which is limited by the btu value, which must be less than 5000. Recycling to a cement kiln may be an option, but it requires a btu value of at least 5000.

4.2 What modifications have been done or are planned upstream to reduce the amount fo waste generated in the waste water treatment facility (e.g., pretreatment, source control, segregation, etc.)?

See response to section 3.7.

4.3 Will the BIF rulings affect any of the current disposal options, onsite, captive, or commercial?

No, but if the cement kiln option is exercised, there could be some effect.

4.4 Is there a preference on producing F037/F038 wastes or K048-K052 wastes in terms of handling or disposal?

No. The facility is not generating any F037/F038 wastes.

4.5 What is the frequency of cleanout for the various waste water treatment units (e.g., API, DAF, storage tank, surface impoundments, etc.)?

The API and IAF units are cleaned annually. Tanks used in conjunction with these are cleaned annually when possible and, otherwise, as needed. The hazardous waste tanks are cleaned annually for their certification inspection. The surface impoundments are cleaned as needed, which is seldom.

NOTICE
If the filmed image is less clear than this Notice it is due to the quality of the document being filmed.

CD2F 003

0 9 7 8

TOTAL
Total Petroleum, Inc.

1400 SOUTH M STREET
ARKANSAS CITY, KANSAS 67005

TELEPHONE 316 442-5100

MAILING ADDRESS:
P.O. BOX 657
ARKANSAS CITY, KANSAS 67005

NOTICE
If the filmed image is less clear than this Notice it is due to the quality of the document being filmed.

July 8, 1991

Ms. Mary Compton
ICF Incorporated
Office 471
9300 Lee Highway
Fairfax, VA 22031

Dear Ms. Compton,

Enclosed is the information you requested during our conversation on July 3, 1991 to complete the F037/F038 questionnaire. Included for the Total Petroleum, Inc. Arkansas City Refinery are: 1) Refinery Water Flow Schematic and 2) Waste Minimization Policy.

If you have any questions, please do not hesitate to call.

Thank you.

Sincerely,

TOTAL PETROLEUM, INC.

P. A. Morgan

P. A. Morgan

Chief Chemist

cc: PAL

CD2F 003

0 9 7 9

TOTAL PETROLEUM, INC.

Arkansas City, KS Facility

December 4, 1990

WASTE MINIMIZATION POLICY

I. OBJECTIVES

A. Compliance with RCRA regulations mandating that every generator of hazardous waste "have a program in place to reduce the volume and toxicity of waste generated to the extent that is economically practical."

B. Economic benefits by reducing waste treatment and disposal costs, raw material purchases, and other operating costs may be realized.

C. Reduce potential environmental liabilities

D. Protect the public health and the environment

E. Improved public image

NOTICE
If the filmed image is less clear than this Notice it is due to the quality of the document being filmed.

CD2F 003

0 9 8 0

NOTICE
If the filmed image is less clear than this Notice it is due to the quality of the document being filmed.

CD2F 003

0981

II. ORGANIZATION

A. Although all employees will be involved in TPI's waste minimization program, the program will be overseen and administered by a program task force. The task force will consist of the following personnel or department representatives on a volunteer or individual department selection basis.

1. Refinery Manager
2. Manager of Operations
3. Operations
4. Process Engineer
5. Project Engineer
6. Laboratory
7. Maintenance
8. Safety
9. Environmental

III. GOALS AND INCENTIVES

A. At a minimum, the waste minimization program task force will meet annually to establish realistic goals for the following year. Accurate production and waste figures will be mandatory to determine goals and to track the program's success. All waste reduction efforts will be thoroughly documented and be measured on a pound waste/1000 barrel feed basis. More frequent meetings of the task force will be conducted to assess the success or identify any problems associated with the waste minimization program.

B. The most effective waste minimization program will require the input and participation of all employees. Various incentives to promote cooperation, communication, and motivation will be examined.

NOTICE
If the filmed image is less clear than this Notice it is due to the quality of the document being filmed.

CD2F 003

0982

IV. ANNUAL ASSESSMENT

A. Before goals can be established, a thorough assessment of the facility's waste streams must be made. The assessment will identify and characterize the individual waste streams, the processes involved in generating the streams, the amounts generated, the inputs and outputs of the different processes, and whether the waste is classified as hazardous or not and if it is hazardous, the characteristic(s) which make it hazardous. Where feasible, flow diagrams and material balances will be employed to assist the assessment phase.

B. During the assessment phase it will become apparent to the task force which waste stream(s) should be given priority with consideration of the following:

1. Compliance with current and future regulations.
2. Costs of waste management.
3. Potential environmental and safety liability.
4. Quantity of waste.
5. Hazardous properties of waste.
6. Ease of implementation.
7. Potential for removing bottlenecks in production or waste treatment.
8. Potential recovery of valuable by-products.
9. Costs associated with potential waste minimization projects.

C. The third phase of the annual assessment will involve generating waste minimization options. Much of the requisite knowledge will come from on-the-job experience and education. However, other sources of background information such as published literature, equipment vendors, consultants, and plant engineers and operators will prove useful.

Some generic waste minimization options to be considered include:

1. Substitution of less hazardous raw materials of production.
2. More efficient technology and equipment.
3. Optimization of production operations and procedures.
4. In-plant recycling.
5. Changing plant practices to generate less hazardous wastewater.

D. Finally, the suggested options will undergo a preliminary screening process to "weed-out" the options that appear marginal, impractical, or inferior without a detailed and more costly feasibility study.

NOTICE
If the filmed image is less clear than this Notice it is due to the quality of the document being filmed.

CD2F 003

0 9 8 3

V. FEASIBILITY ANALYSIS

A. A technical evaluation of the proposed options is necessary to determine which if any of the options are compatible with the facility's operations and physical constraints and if the option(s) will work. A ranking of the various options in relation to technical feasibility will then be performed helping to aid in the identification of the most desirable options.

B. The options will also undergo an economic evaluation. The economic evaluation will consider capital and operating costs and any potential savings. Also, adjustments for environmental and safety risks and liabilities will be considered.

C. At the conclusion of the feasibility analysis, the task force will make a determination of the technical and economic feasibility of the various waste minimization options proposed. If the benefits outweigh the costs then a particular option will be chosen to be implemented.

VI. IMPLEMENTATION

A. Funding must be obtained for the chosen option.

B. Options that do not require any additional equipment will be implemented as soon as possible.

C. Follow-up evaluations on the performance of the chosen option will be conducted periodically.

D. Will be an ongoing program.

E. New production processes will be subjected to the assessment, technical, and economic feasibility phases before construction begins.

NOTICE
If the filmed image is less clear than this Notice it is due to the quality of the document being filmed.

CD2F 003

0984

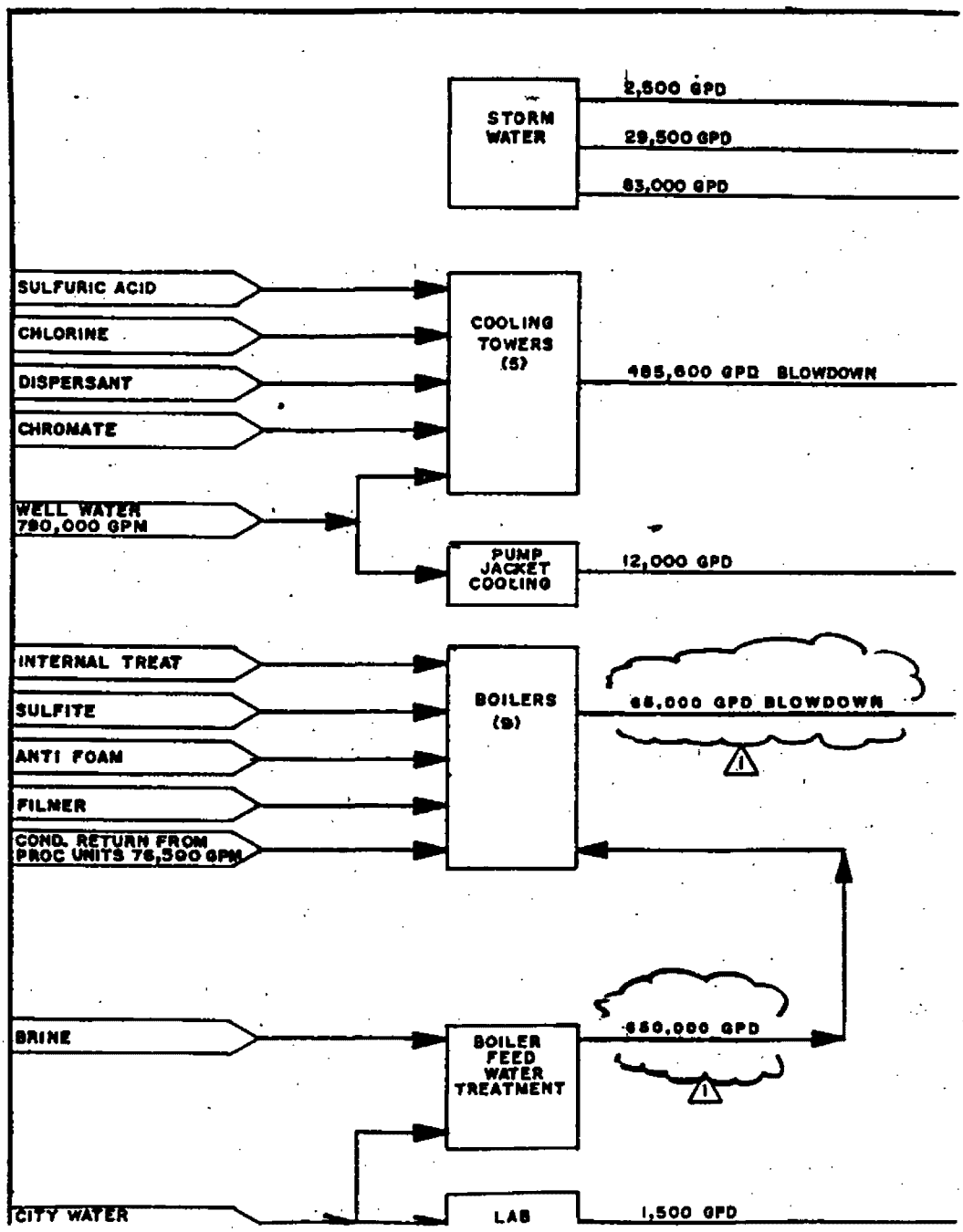

NOTICE
If the filmed image is less clear than this Notice it is due to the quality of the document being filmed.

CD2F 003

0 9 8 5

NOTICE
If the filmed image is less clear than this Notice it is due to the quality of the document being filmed.

CD2F 003

0986

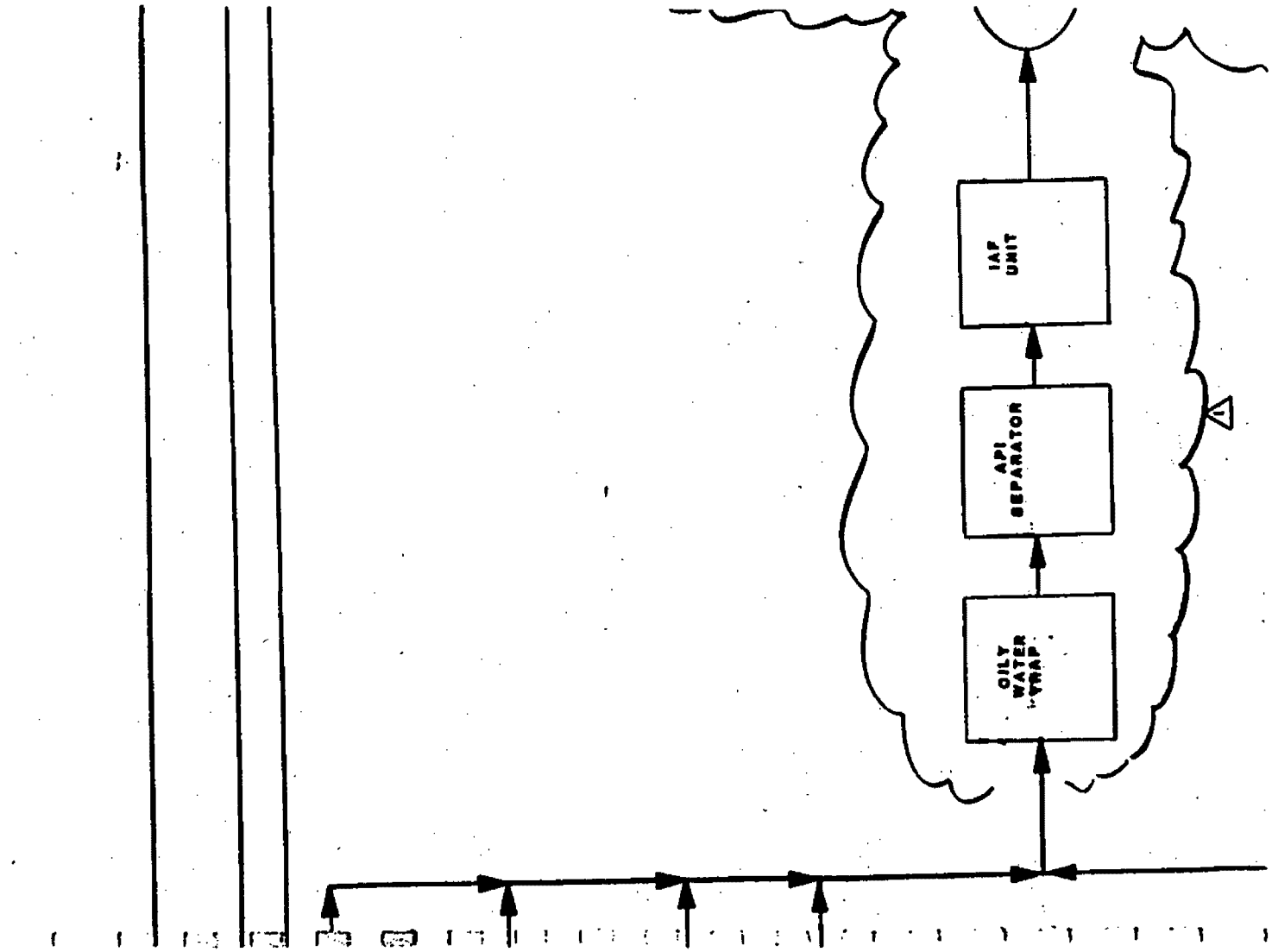

NOTICE
If the filmed image is less clear than this Notice it is due to the quality of the document being filmed.

CD2F 003

0987

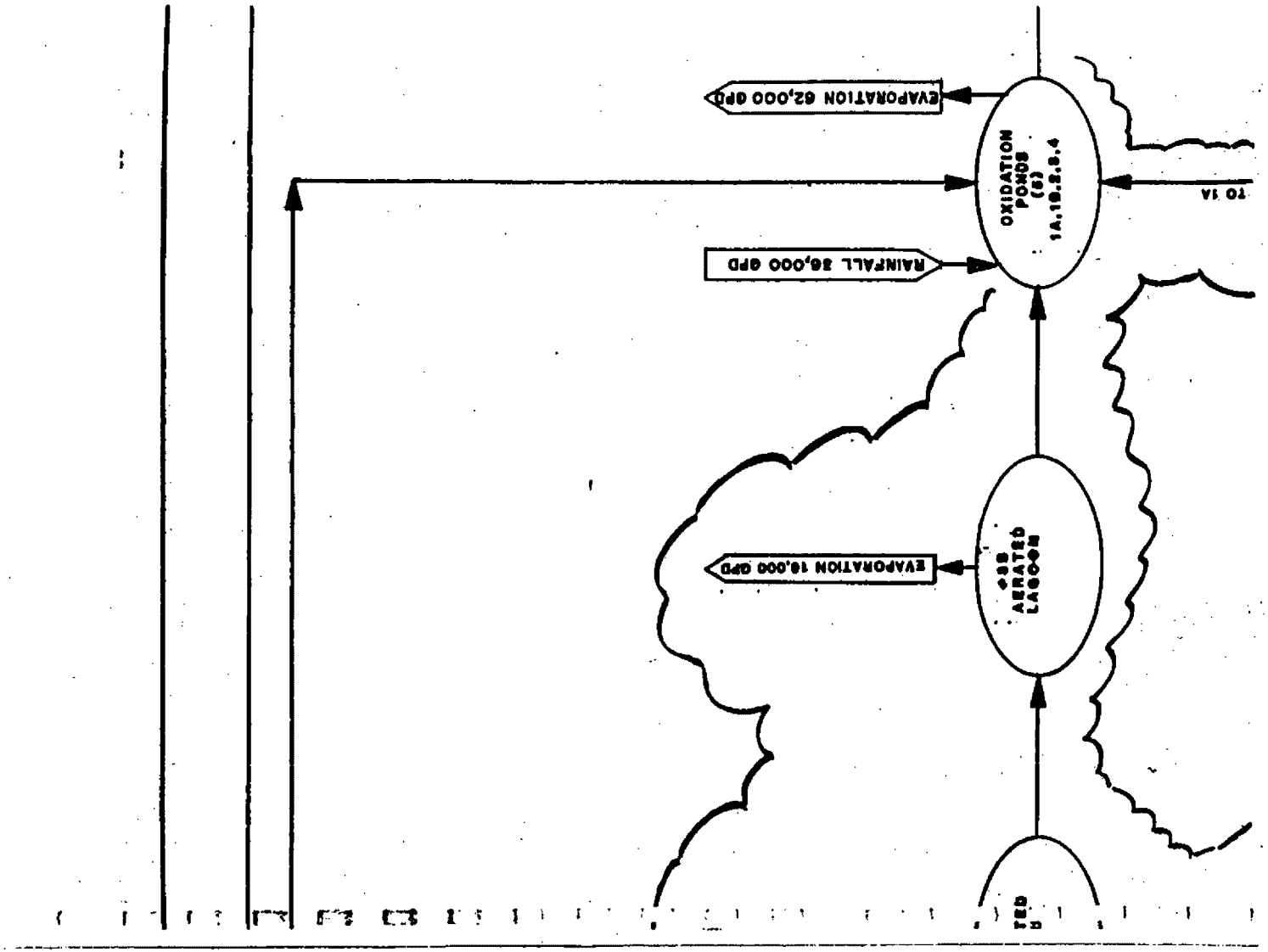

NOTICE
If the filmed image is less clear than this Notice it is due to the quality of the document being filmed.

CD2F 003

0988

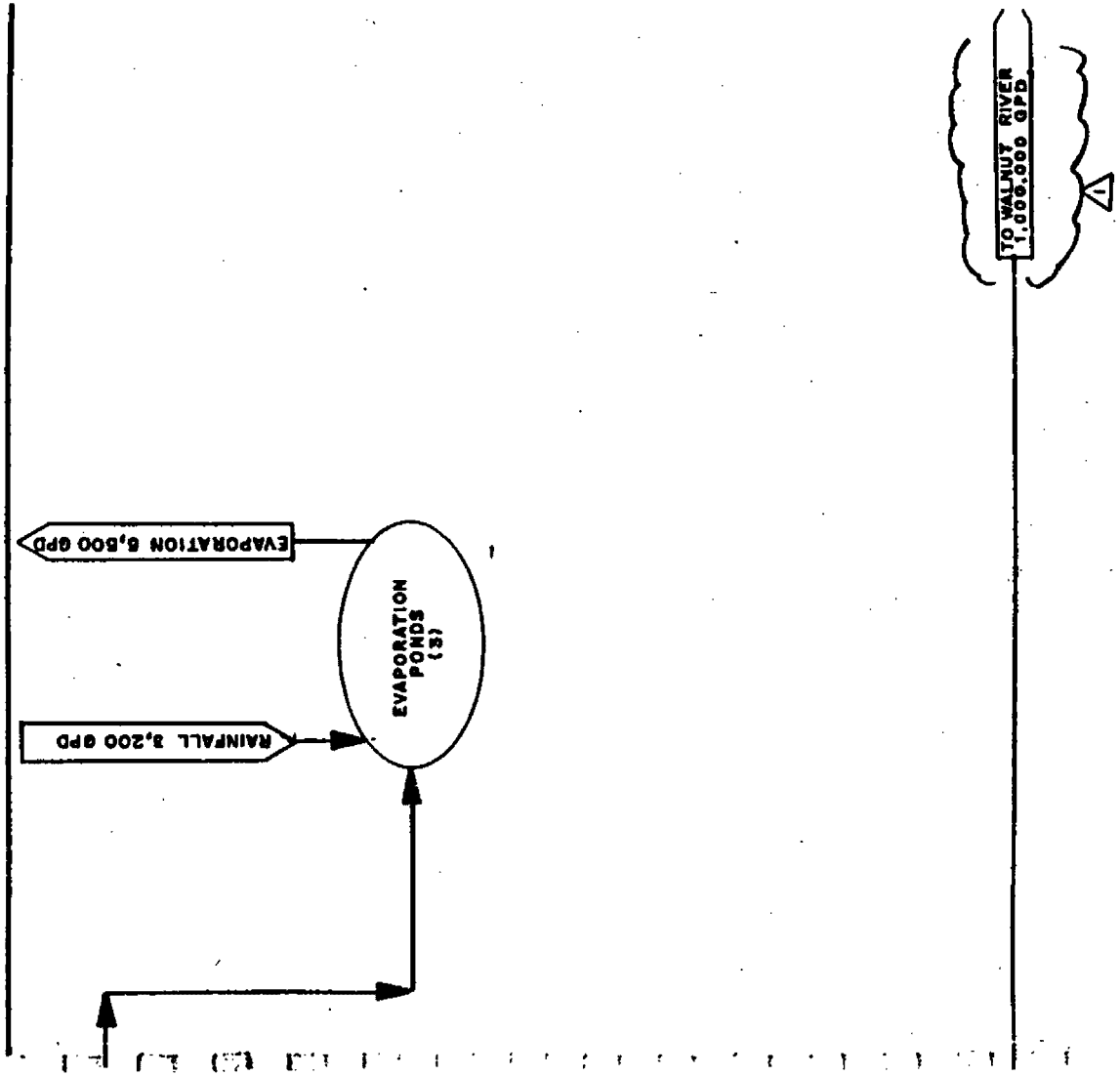

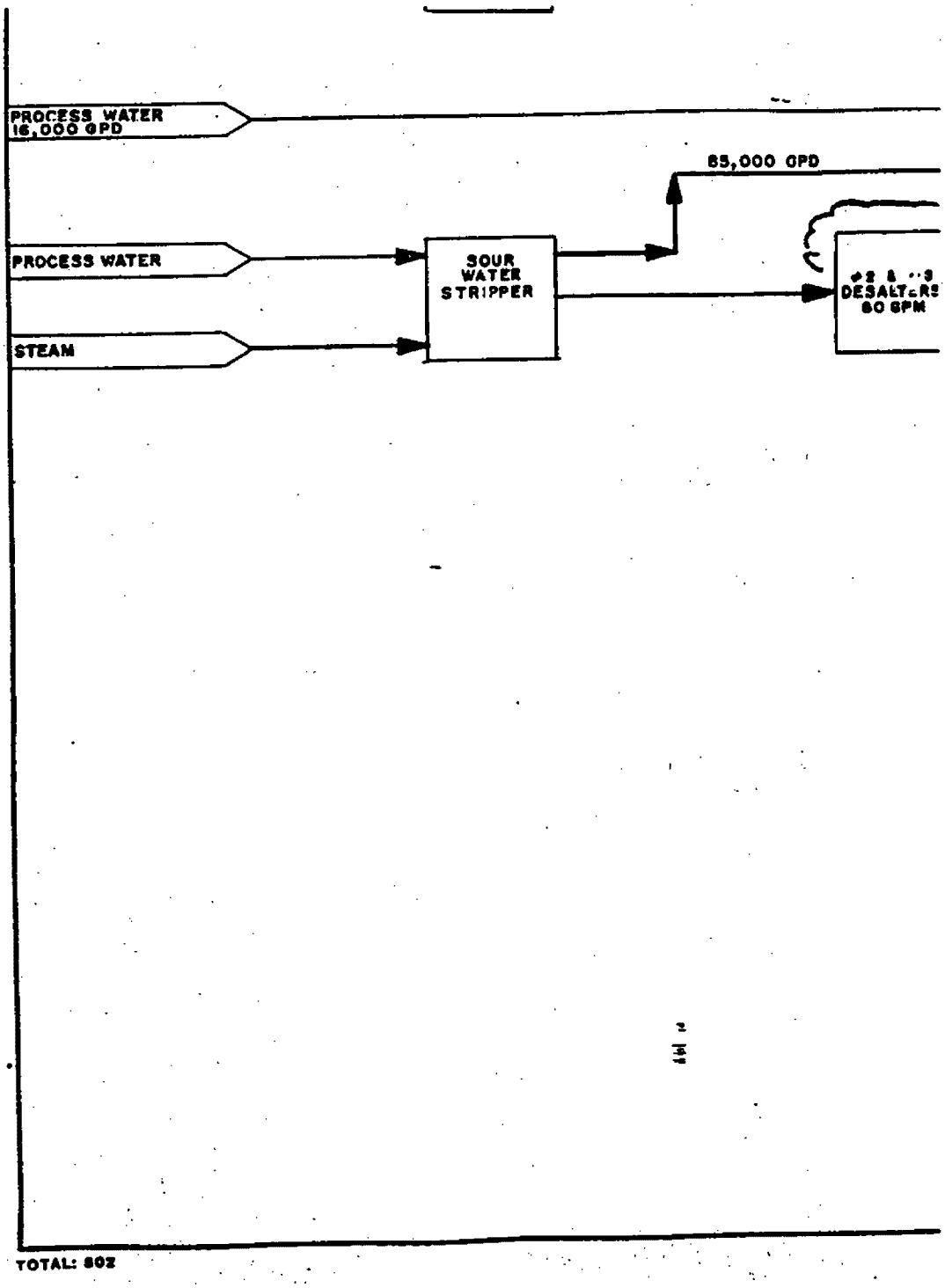

NOTICE
If the filmed image is less clear than this Notice it is due to the quality of the document being filmed.

CD2F 003

0989

NOTICE
If the filmed image is less clear than this Notice it is due to the quality of the document being filmed.

CD2F 003

0990

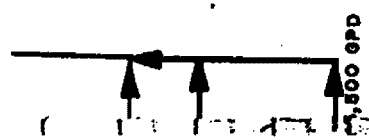

NOTICE
If the filmed image is less clear than this Notice it is due to the quality of the document being filmed.

CD2F 003

0991

NOTICE
If the filmed image is less clear than this Notice it is due to the quality of the document being filmed.

CD2F 003

0992

TOTAL
Total Petroleum, Inc. Arkansas City, Kans.

TITLE
REFINERY WATER FLOW

DRWN. MEYER	DATE 2-20-86	SCALE NONE	LOCATION
CHK'D.	DATE	PROJECT	
APP'D.	DATE	DWG. NO. 84-1-D-1 SHT. 1	REV. 1

ED AS SHOWN	R.L.		
DESCRIPTION	DWN.	CHK.	APP.

14173 / 5

KSD087418695

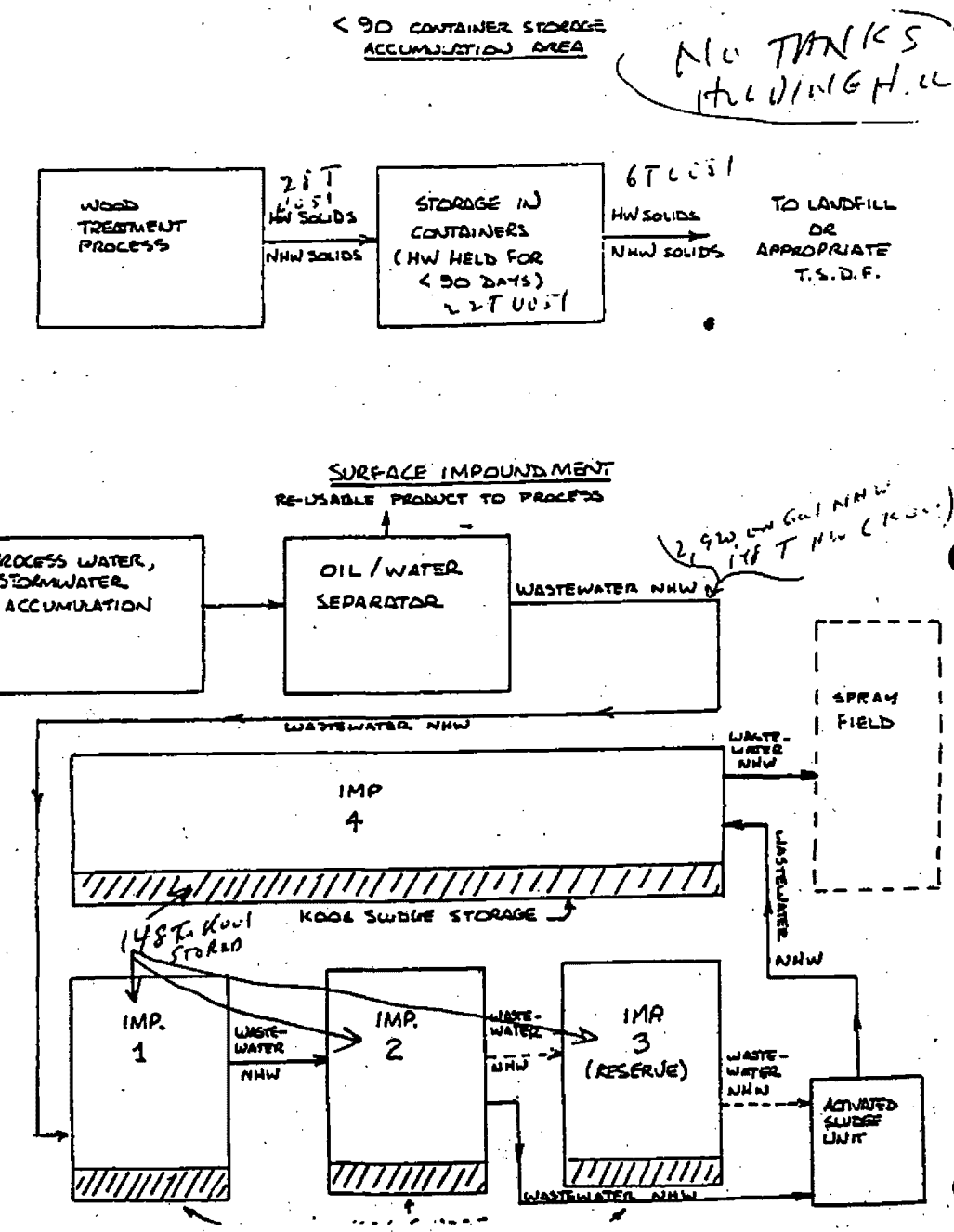

NOTICE
If the filmed image is less clear than this Notice it is due to the quality of the document being filmed.

CD2F 003

0 9 9 3

FIGURE 1

This schematic is confusing - refer to next page to see what happened in 1986 & what will be used in 1987

CAF 1/19/88

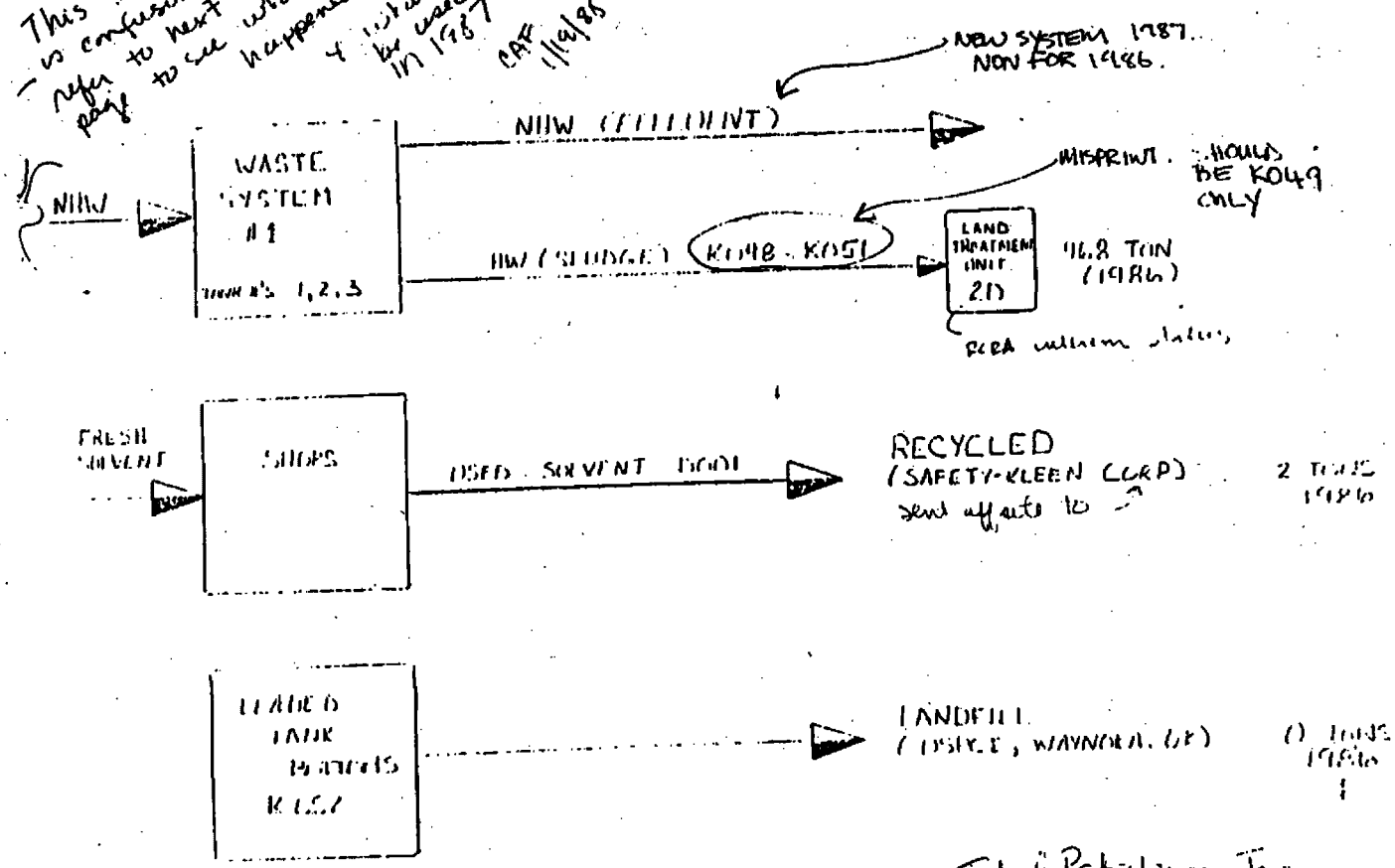

Total Petroleum Inc
KSD031811865

NOTICE
If the filmed image is less clear than this Notice it is due to the quality of the document being filmed.

019281
Sun Petroleum.
KSIX $74186095

FIGURE 2

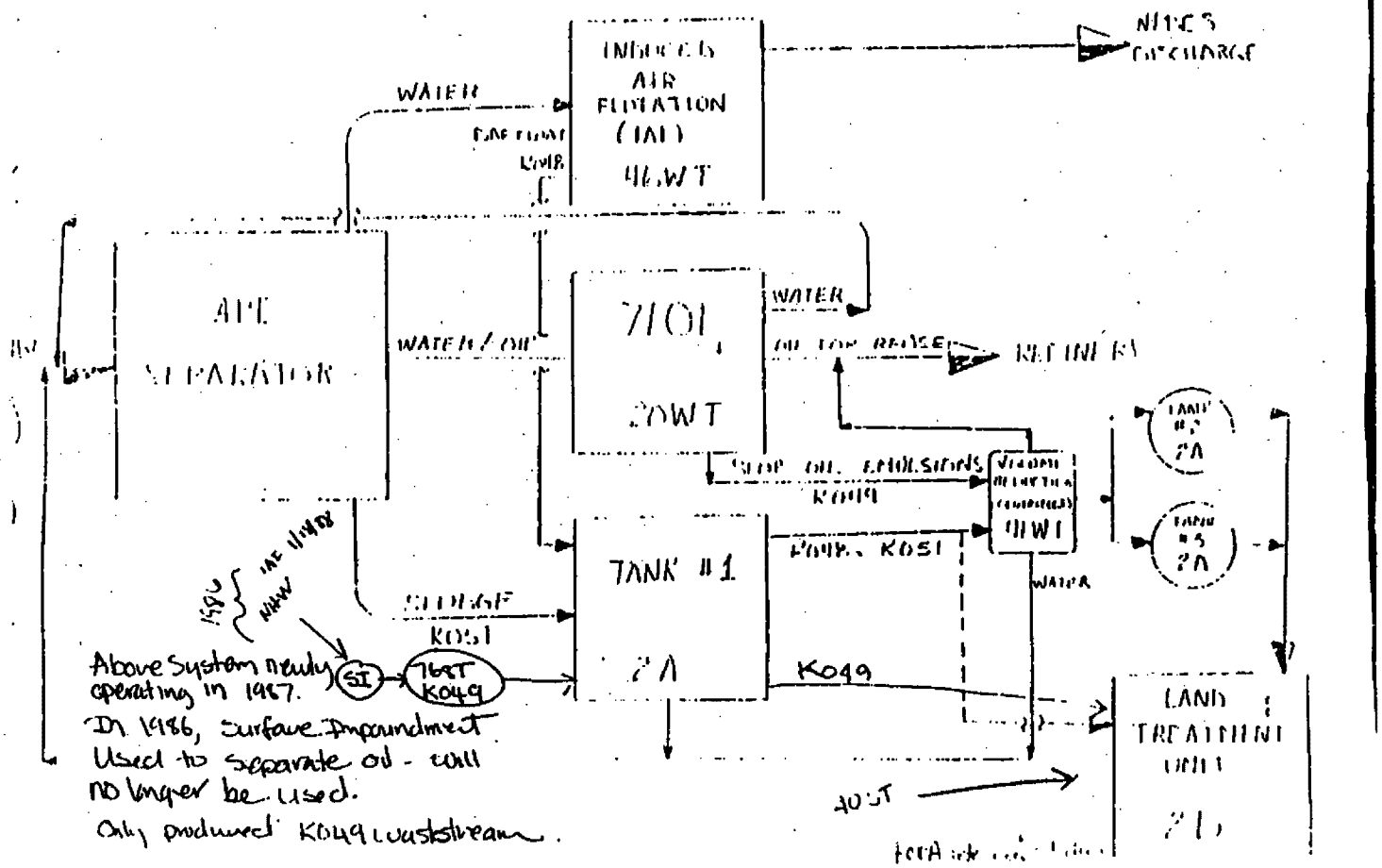

NOTICE
If the filmed image is less clear than this Notice it is due to the quality of the document being filmed.

CD2F 003

0 9 6 0

F037 AND F038 WASTE CAPACITY ANALYSIS:
DATA USE AND TRACKING SHEET

Refinery: BP Oil - Alliance Refinery, Belle Chasse
State: Louisiana

Data sources available:

_x_ Petroleum refinery visits/voluntary submission

_x_ National Survey of Hazardous Waste Treatment, Storage, Disposal, and Recycling Facilities (TSDR survey)

__ National Survey of Hazardous Waste Generators

_x_ Biennial report/state reporting requirements

__ California hazardous waste data base

_x_ Petroleum refinery data base (PRDB)

_x_ No-migration petitions

Basis for F037 and F038 waste estimation:

EPA used data provided by BP Oil (Alliance Refinery) because it was the most recent and the only source that describes F037 and F038 waste generation and management. Other sources were used only in comparison with the refinery's data submission.

F037 and F038 waste estimates:

F037 (routine) = 1,000 tons/year from cleanout of sewer and equalization ponds.

F037 (one-time) = 10,000 tons from closure of stormwater/process water impoundments, which had not been cleaned for about five years. The impoundments will be replaced by tanks, which will be cleaned out every two to five years; therefore, the F037 sludge would not be generated continuously.

BP Oil Alliance does not anticipate generating F038 wastes.

NOTICE
If the filmed image is less clear than this Notice it is due to the quality of the document being filmed.

CD2F 003

0996

SENT BY:Xerox Telecopier 7020 ; 7- 9-91 ; 8:22AM ; BP OIL HSEQ- ICF, INC. ;# 1

BP OIL

BP Oil Company
Alliance Refinery
PO Box 391
Belle Chasse, LA 70037

NOTICE
If the filmed image is less clear than this Notice it is due to the quality of the document being filmed.

CD2F 003

FACSIMILE COVER PAGE

TO: FRANCES STEINACHER

NAME OF FIRM: ICF

FAX NO: 703-934-9740

TELEPHONE NO: 703-934-3824

DATE: 7/9/91 TIME: 8:20 am

NUMBER OF PAGES: 5 INCLUDING COVER PAGE

(X) URGENT - CALL FOR PICKUP!

( ) CONFIDENTIAL

( ) RESTRICTED

( ) UNRESTRICTED

FROM: HENRY HETHCOAT

FAX NO: (504) 656-3466

TELEPHONE NO: (504) 656-3

COMMENTS:

0997

NOTICE
If the filmed image is less clear than this Notice it is due to the quality of the document being filmed.

CD2F 003

0 0 5 0 8

F037 AND F038 QUESTIONS

We have developed a preliminary series of questions to aid in our understanding of how the new F037 and F038 waste listing and proposed land ban will affect refineries. These questions involve not only F037 and F038 wastes, but expand to K048-K052 and TC wastes, discuss past and future waste water treatment facility modifications, on site treatment, etc., in order for us to get an understanding of the whole picture and how everything interrelates. In addition to gaining an overall understanding of the issues, we will be discussed any unique problems or feasibility issues that refineries may have associated with these wastes.

1.0 **Waste Water Treatment Facility**

1.1 • What is your current configuration (schematic) ? ATTACHED

1.2 • How segregated is your system, stormwater vs. process water?
75% SEGREGATED

1.3 • What modifications have been made in the last 5 years?
NONE

1.4 • What were the driving forces behind these modifications?
NA

1.5 • What future modifications are planned?
REPLACE SURFACE IMPOUNDMENTS WITH TANKS, REVAMP ENTIRE SYSTEM.

1.6 • What are the driving forces behind these modifications?
[illegible] NESHAPS, TCLP, Primary Sludge Rules

1.7 • How have the K048-K052, TC and F037/F038 rulings and land bans affected the facility in terms of modifications, operation, capacity, etc.? REQUIRED A 150 mm HEADER TO WASTEWATER SYSTEM

2.0 **K048-K052 and TC Wastes**

2.1 • What is your estimated rate of generation and land disposal of K048-K052 and TC wastes? 2000 TONS/YR

2.2 • How do you currently treat, recycle or dispose of these wastes and are there any foreseeable changes in the treatment, recycling or disposal? CURRENTLY WE ARE STORING THESE WASTES IN TANKS & IMPOUNDMENTS, AS WE RUN OUT OF STORAGE CAPACITY WE ARE LOOKING TO SOLVENT EXTRACTION, LANDTREATMENT, CEMENT KILNS, AND INCINERATION

2.3 • How have the waste generation rates changed with the hazardous waste ruling and land ban? DOUBLED

NOTICE
If the filmed image is less clear than this Notice it is due to the quality of the document being filmed.

2.4 • Have there been any upstream or waste water treatment facility operating changes to reduce the amount of these wastes generated and how effective are these changes? WE INITIATED A PROGRAM TO TRY AND MINIMIZE THE AMOUNT OF SOLIDS ENTERING THE SEWER SYSTEM, WE HAVE SEEN SOME REDUCTIONS (30-40%).

2.5 • Will the proposed F037 and F038 land ban affect the amount of these wastes produced? YES

2.6 • How much of these wastes are stockpiled in ~~containers~~ TANKS or surface impoundments? 30-60,000 BBLS

2.7 • What are the chemical and physical characteristics of the currently generated and stockpiled wastes (ie. are they dewatered, do they have significant btu value, etc.)? RAW SLUDGES NOT DEWATERED

2.8 • How will these characteristics change with any planned facility modifications and operating changes? - NO CHANGES, WE WILL ADD MORE STORAGE CAPACITY

2.9 • What quantity of your secondary treatment waste, such as sludge from the aggressive biological units, is categorized as TC waste? NONE

3.0 F037 and F038 Wastes

3.1 • Is there a current estimate of the amount of F037 and F038 wastes generated? ≈ 1000 TONS/YR

3.2 • Is there an estimate of the amount of F037 and F038 wastes stockpiled in containers or surface impoundments? ≈ 10,000 TONS

3.3 • What are you currently doing with the stockpiled waste and what are your future plans? - STORED IN SURFACE IMPOUNDMENTS & TANKS

3.4 • What are the chemical and physical characteristics of both the currently generated and the stockpiled wastes? RAW SLUDGE - 50% WATER, 40% SOLIDS, 10% OIL

3.5 • What is your current treatment, recycle or disposal method and how will this change with the land ban? WE ARE CURRENTLY STORING - IN THE FUTURE WE PLAN TO USE DEWATERING FOLLOWED BY SOLVENT EXTRACTION TREATMENT

3.6 • What are the capacities of these treatment, recycle and disposal methods in relationship to F037 and F038 wastes?
WILL REDUCE CURRENT CAPACITY BY 1/2 (50%)

CD2F 003

0 0 5 9

NOTICE
If the filmed image is less clear than this Notice it is due to the quality of the document being filmed.

CD2F 003

1000

3.7 • Are there any planned changes, either physical or operational, to deal with the land ban and how will these changes affect K048-K052 waste generation?
WE ARE SEEKING A NON-HAZARDOUS PETITION FOR OUR LANDFARM

3.8 • Is it possible to reduce F037/F038 or K048-K052 wastes by putting more of a load on the aggressive biological units? No.

4.0 **General**

4.1 • What are your offsite treatment options and are the unique features of your waste that would limit the treatability options? INCINERATION, CEMENT KILN

4.2 • What modifications have been done or are planned upstream to reduce the amount of waste generated in the waste water treatment facility (eg. pretreatment, source control, segregation, etc.)? SOURCE CONTROL, RECYCLING

4.3 • Will the BIF rulings affect any of the current disposal options, onsite, captive or commercial? YES

4.4 • Is there a preference on producing F037/F038 wastes or K048-K052 wastes in terms of handling or disposal? YES - K048 - K052

4.5 • What is the frequency of cleanout for the various waste water treatment units (eg. API, DAF, storage tank, surface impoundments, etc.)? API - 2X/YR
SOURGE TANKS - 1/YR, DAF - 2X/YR SURF IMPOUNDMENTS - EVERY 4-5 YRS.

While some of these questions are very specific, we realize that initially not all of the exact quantities, etc. will be available. The main purpose of the questions is to get an overall understanding, to get a feel for how much planning is taking place, how much data is available, and what are the unique problems that the refineries will encounter.

We have been asked to add a field to the modelling database approximating

1. Age of refinery - 20 yrs
2. Age of wastewater treatment system - 20 yrs
3. Effect of state regulations - None
4. Precipitation (I can do this myself using in-house data). (Annual) 40 in/yr

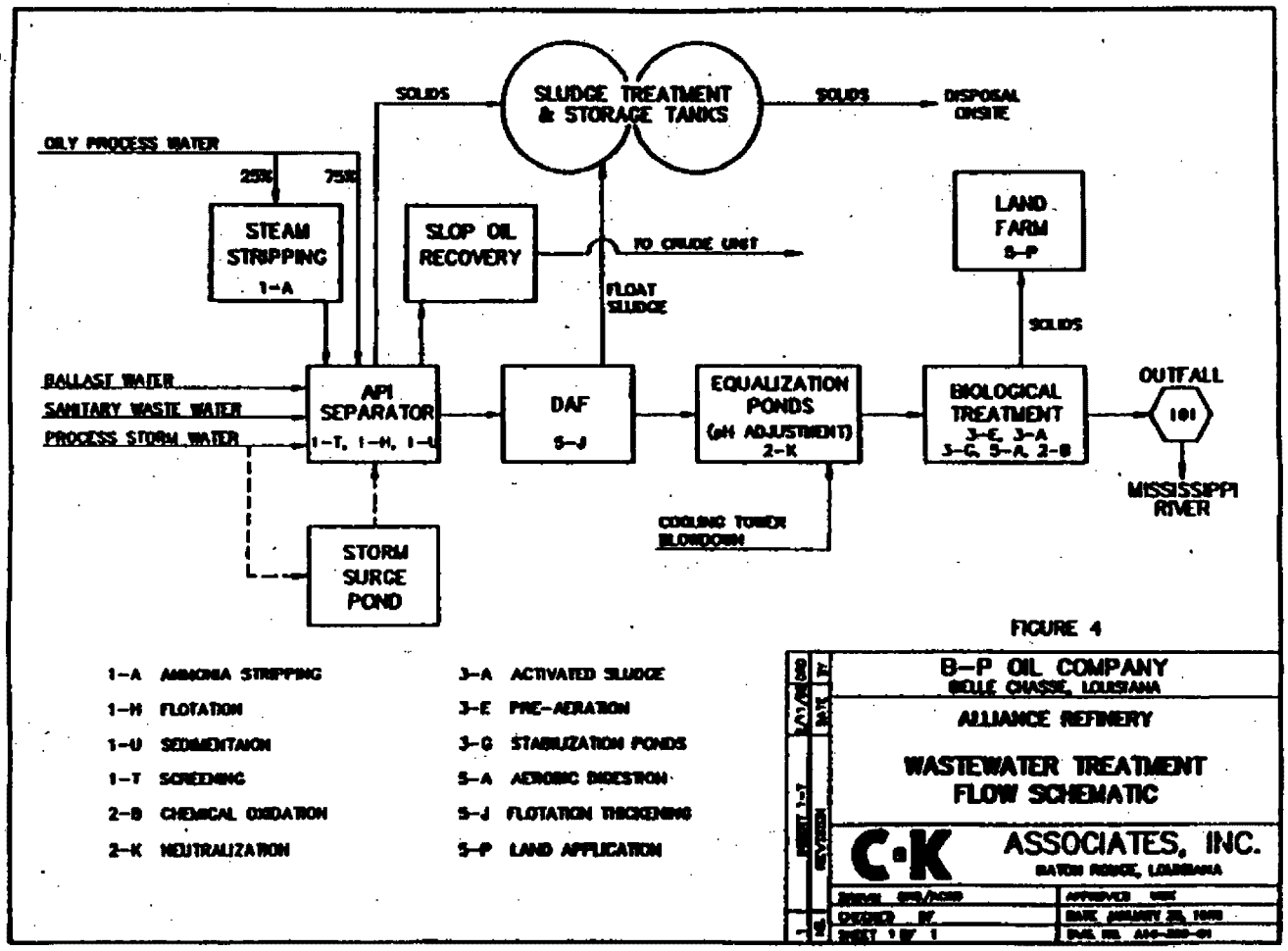

FIGURE 4

NOTICE
If the filmed image is less clear than this Notice it is due to the quality of the document being filmed.

CD2F 003

1 0 0 1

F037 AND F038 WASTE CAPACITY ANALYSIS:
DATA USE AND TRACKING SHEET

Refinery: Exxon - Baton Rouge Refinery
State: Louisiana

Data sources available:

_x_ Petroleum refinery visits/voluntary submission

_x_ National Survey of Hazardous Waste Treatment, Storage, Disposal, and Recycling Facilities (TSDR survey)

__ National Survey of Hazardous Waste Generators

_x_ Biennial report/state reporting requirements

__ California hazardous waste data base

_x_ Petroleum refinery data base (PRDB)

__ No-migration petitions

Basis for F037 and F038 waste estimation:

EPA used data provided by Exxon (Baton Rouge Refinery) because it was the most recent and the only source that describes F037 and F038 waste generation and management. Other sources were used only in comparison with the refinery's data submission.

F037 and F038 waste estimates:

F037 (routine) = 6,000 tons/year of dewatered cake from an average annual clean out of 32,500 tons of sludge from impoundments.

F037 (one-time) = 30,000 tons in catch basins.

NOTICE
If the filmed image is less clear than this Notice it is due to the quality of the document being filmed.

CD2F 003

1002

EXXON
COMPANY, U.S.A.
POST OFFICE BOX 2180 • HOUSTON, TEXAS 77252-2180

NOTICE
If the filmed image is less clear than this Notice it is due to the quality of the document being filmed.

FACSIMILE

TRANSMISSION FORM

DATE: JUNE 27, 1991 PAGES TO FOLLOW 11 + COVER.

URGENT ✓ NORMAL ____ PLEASE CALL ON ARRIVAL ____

TO: MR. JAMES HSU
COMPANY: ICF INC.
FAX: 703/218-2668
PHONE: ____

FROM: ROBERT NOLAN
COMPANY: EXXON COMPANY USA
FAX: 713/656-6677
PHONE: 713/656-5049

RETURN ORIGINAL: YES ✓ NO ____ IF YES, NAME AND ROOM NUMBER: MARSHA WASHINGTON

COMMENTS: ____

HOUSTON 36TH FLOOR
FAX MACHINE NUMBER (713) 656-6677

CD2F 003
1003

NOTICE
If the filmed image is less clear than this Notice it is due to the quality of the document being filmed.

EXXON COMPANY, U.S.A.
POST OFFICE BOX 2180 • HOUSTON, TEXAS 77252-2180

REFINING DEPARTMENT

June 27, 1991

By Fax

Mr. James Hsu
ICF, Inc.
9300 Lee Highway
Fairfax, Virginia 22031

Dear Mr. Hsu:

Enclosed are the completed F037 and F038 questionnaires for the Exxon Baytown and Baton Rouge refineries.

Please call me at (713) 656-5049 if you have any questions.

Very truly yours,

Robert Nolan

Robert M. Nolan

CD2F 003

1004

NOTICE
If the filmed image is less clear than this Notice it is due to the quality of the document being filmed.

CD2F 003

1005

WASTE WATER TREATMENT FACILITY

What is your current configuration?
See attached block diagram

How segregated is your system, stormwater vs. process water?
Baton Rouge refinery sewer system is not segregated.

What modifications have been made in the last five years?
No significant modifications in the last 5 years.

What are the driving forces behind these modifications?
N/A

What future modifications are planned?
Considering spill diversion tankage and stormwater segregation storage to address stormwater compliance and primary sludge concerns and installing benzene stripper for NESHAPS and TC wastewaters.

What are the driving forces behind these modifications?
TC, Primary Sludge and Benzene NESHAPS rulls.

How have the K048-52, TC, and F037/F038 rulings and land bans affected the facility in terms of modifications, operation, capacity, etc?
Part A permits have been filed on surface impoundments due to TC/Primary Sludge rules. Refinery is pursuing more aggressive dewatering/deoiling of listed and TC hazardous wastes.

K048-K052 and TC WASTES

What is your estimated rate of generation and land disposal of K048-K052 and TC wastes?
Rate of generation for K wastes estimated to be 110k wet tons/yr (20-25k dewatered tons/yr) with no land disposal prior to BDAT treatment or recycling. For TC solid wastes, volume is estimated at 5k tons/yr, all to land disposal. Refinery process wastewaters are currently TC hazardous and are managed in NPDES treatment system impoundments. This volume is estimated to be 13 million tons/year. Until facilities to comply with Benzene NESHAPS regulations are on-line and demonstrate they can effectively reduce benzene below .5 ppm, these wastewaters must be managed as TC hazardous wastes.

How do you currently treat, recycle, or dispose of these wastes and are there any foreseeable changes in the treatment, recycling or disposal?
Sludges are dewatered onsite; oils are recovered for refining and remaining solids are sent for offsite disposal i.e., landfill, incineration or cement kilns, etc pending sludge characteristics.

NOTICE
If the filmed image is less clear than this Notice it is due to the quality of the document being filmed.

CD2F 003

1 0 0 6

How have the waste generation rates changed with the hazardous waste ruling and land ban?
Generation rates have not changed substantially. Aggressive dewatering/dealling is reducing volume sent offsite. Continuing to evaluate options such as solvent extraction, thermal treatment and other advanced technologies to further reduce disposal tons.

Have there been any upstream or waste water treatment facility operating changes to reduce the amount of these wastes generated and how effective are these changes?
Waste minimization activities and work practice changes are being implemented to reduce soil erosion to the sewer system and continuing to evaluate storm water segregation.

Will the proposed F037/F038 land ban affect the amount of these wastes produced?
No.

How much of these wastes are stockpiled in containers or surface impoundments?
Primary sludges from surface impoundment have not tested as TC hazardous. Estimate of TC wastes in tankage (tank bons) is 75k wet tons (50k dewatered tons). Estimated in-situ wet tons of K049 and K051 wastes is 18-20k tons (6k dewatered tons).

What are the chemical and physical characteristics of the currently generated and stockpiled wastes (i.e., are they dewatered, do they have significant btu value, etc)?
As generated in-situ wastes are high in water content with no significant btu value. Dewatering will significantly reduce volumes to be managed. Btu value of dewatered materials may or may not exceed 5k.

How will these characteristics change with any planned facility modifications and operating changes?
Modifications such as benzene NESHAPS facilities may directly reduce volatile constituents; the sludge will, however, still be an oily material. Btu value may be reduced, but not quantified at this time.

What quantity of your secondary treatment waste, such as sludge from aggressive biological units, is categorized as TC wastes?
None, analysis of Biox sludge show it does not fail TC.

F037 and F038 WASTES

Is there a current estimate of the amount of F037 and F038 wastes generated?
Yes, approximately 30-35k wet in-situ tons (8k dewatered tons) in the surface impoundment and refinery sewer system catch basins.

NOTICE
If the filmed image is less clear than this Notice it is due to the quality of the document being filmed.

CD2F 003

1007

Is there an estimate of the amount of F037 and F038 wastes stockpiled in containers or surface impoundments?
Yes, about 30k wet in-situ tons (6k dewatered tons) in a surface impoundment and catch basins and an additional 10-30k wet in-situ tons (15k dewatered tons) contained in the NPDES sewer system.

What are you doing with the stockpiled waste and what are your future plans?
Material currently stored in surface impoundment, NPDES treatment system tanks and sewers. Currently planning to dredge impoundment and clean out of some sewers prior to landban.

What are the chemical and physical characteristics of both the currently generated and the stockpiled wastes?
Wastes are currently contained in the surface impoundment and sewer basins. It is basically an oily sludge concentration with low btu value. Currently generated waste is dewatered and sent to offsite landfill; material is 50-70% solids. Material btu value may or may not meet 5k/lb.

What is your current treatment, recycle or disposal method and how will this change with the land ban?
Current method is to aggressively dewater, deoil and landfill. With landban, waste may undergo further aggressive dewatering prior to offsite treatment.

What are the capacities of these treatment, recycle and disposal methods in relationship to F037 and F038 wastes?
Current capacity is limited to contract dewatering services. Currently assessing additional technology such as thermal description/treatment, solvent extraction, etc.

Are there any planned changes, either physical or operational, to deal with the land ban and how will these changes affect K048-K052 waste generation?
Currently assessing more aggressive dewatering/deoiling technologies and additional upstream waste minimization practices such as sewer segregation and erosion control. Primary sludge landban will not affect K048-K052 generation, however, treatment and disposal options for "F" wastes may end up being limited to same as those we now use for "K" wastes, which may reduce capacity available for "K" waste streams.

Is it possible to reduce F037/F038 or K048-K052 wastes by putting more of a load on the aggressive biological units?
Biological treatment may be an effective technology to treat the organic constituents of these wastes. The aggressive biological units, however, are not designed to manage the additional solids associated with these wastes. Additionally, current regulations do not allow a carryover of listed wastes into downstream units without RCRA regulating the entire NPDES treatment train.

NOTICE
If the filmed image is less clear than this Notice it is due to the quality of the document being filmed.

CD2F 003

GENERAL

What are your offsite treatment options and are the unique features of your waste that would limit the treatability options?

Primary option is to send aggressively dewatered/deoiled solids to offsite treatment facilities such as cement kilns or incinerators, which can handle a dry solids cake. Physical features inclue a high solids cake with a variable oil content. Solids handling capability by treatment outlets is necessary.

What modifications have been done or are planned upstream to reduce the amount of waste generated in the waste water treatment facility (eg. pretreatment, source control, segregation, etc.)?

Planned projects include stormwater segregation and Benzene NESHAPS and additional work practices to reduce solids loading to the refinery sewer system. On-going items include solids control work practices and aggressive dewatering/deoiling of selected waste streams.

Will the BIF rulings affect any of the current disposal options, onsite, captive or commercial?

Yes, leaves open the option to send high btu value wastes to cement kilns as a fuel.

Is there a preference on producing F037/F038 wastes or K048-K052 wastes in terms of handling or disposal?

K048-K052 wastes are generated at specific point sources and waste handling facilities are currently set up to handle these waste streams at those locations. If there was a way to shift the generation of F037/F038 wastes to these points, it would facilitate handling.

What is the frequency of cleanout for the various waste water treatment units (eg. API, DAF, storage tank, surface impoundments, etc.)?

Frequency listed on the unit plot plan, usually on an annual basis.

1008

Baton Rouge Refinery Wastewater Handling System 1991.

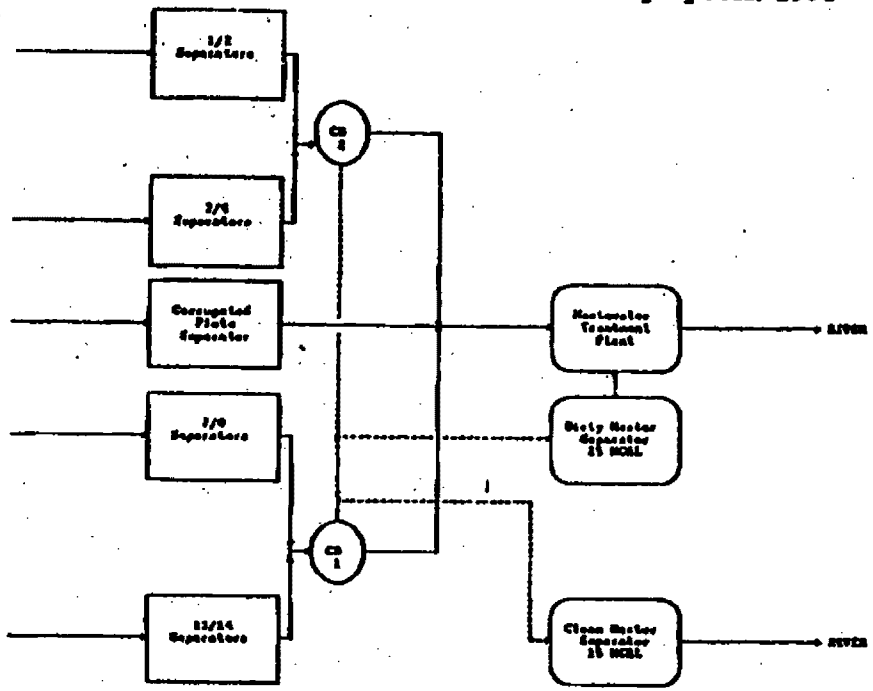

All Separator cleanings are usually done on an annual basis; sometimes/ship on a bi-annual basis.

All CPI/DAFF surface impoundments do not require cleaning. DAFF surface impoundments (2) are not shown on schematic

All DAF surface impoundment cleanings are on an annual basis.

NOTICE
If the filmed image is less clear than this Notice it is due to the quality of the document being filmed.

CD2F 003

1009

NOTICE
If the filmed image is less clear than this Notice it is due to the quality of the document being filmed.

CD2F 003

PHONE LOG FOR F037 AND F038 CAPACITY ANALYSIS

CONTACT:	Robert Nolan (Exxon: Houston, TX; Baytown, TX; and Baton Rouge, LA)
PHONE NUMBER:	(713) 656-5049
CALLER:	James Hsu
DATE:	9/10/91
SUBJECT:	The use of cokers and thermal dryers to recycle petroleum wastes

---

Mr. Nolan indicated that the Baytown refinery does not recycle petroleum wastes using its on-site gasifying coker because the technology to recycle petroleum wastes using this type of coker is not yet available. The Baton Rouge refinery cannot recycle petroleum wastes using its on-site coker because addition of wastes to their anode-grade coke would degrade its purity.

The Baytown refinery had operated a first-generation thermal dryer, but discontinued the use of the dryer because of safety and operational problems. Mr. Nolan mentioned that on several occasions oxygen leaked into the dryer and caused explosions. He indicated that major redesign of the dryer would be needed to overcome the problems.

The Baton Rouge refinery is operating a new thermal dryer on a trial basis. The operation has also encountered several problems (e.g., feed becomes tacky during drying; heat transfer problems; and cooling problems with the residuals). The vendor is redesigning the thermal dryer to overcome these problems. The dryer at Baton Rouge is rated to process 50 tons/day of wastes, but is currently capable of processing 35 tons/day.

Mr. Nolan indicated that DAF floats (K048), which has a relatively high water content (average 82 percent water), is easily processed in the dryer. However, API separator sludges, which contain less water (average 65 percent water), is mechanically more difficult to process. Primary sludges (F037 and F038), which are similar to API separator sludges, would also be more difficult to process using the thermal dryer.

The thermal dryers are classified as recycling/recovery units and are exempt from hazardous waste permitting. The most time consuming activities for starting up a dryer is to construct a concrete pad to support the dryer and to obtain an air permit.

Exxon's objective in using thermal drying is to reduce waste volumes rather than meet BDAT standards. Since the operation of thermal dryers have not yet Exxon's expectations, the company has not ruled out other waste recycling technologies, such as solvent extraction and thermal distillation.

Mr. Nolan also indicated the surface impoundments in Baytown and Baton Rouge

1 0 1 0

would be dredged before the F waste land ban. There are no future plans to close these stormwater impoundments since they are an integral part of the wastewater treatment process. However, Exxon is planning to segregate these stormwater impoundments so that they will receive only wet weather flows.

NOTICE
If the filmed image is less clear than this Notice it is due to the quality of the document being filmed.

CD2F 003

1 0 1 1

F037 AND F038 WASTE CAPACITY ANALYSIS:
DATA USE AND TRACKING SHEET

Refinery: Murphy Oil - Meraux Refinery
State: Louisiana

Data sources available:

_x_ Petroleum refinery visits/voluntary submission

_x_ National Survey of Hazardous Waste Treatment, Storage, Disposal, and Recycling Facilities (TSDR survey)

__ National Survey of Hazardous Waste Generators

__ Biennial report/state reporting requirements

__ California hazardous waste data base

_x_ Petroleum refinery data base (PRDB)

__ No-migration petitions

Basis for F037 and F038 waste estimation:

EPA used data provided by Murphy Oil (Meraux Refinery) because it was the most recent and the only source that describes F037 and F038 waste generation and management. Other sources were used only in comparison with the refinery's data submission.

F037 and F038 waste estimates:

F037 (one-time) - 1,400 tons from cleaning of stormwater/process water surge basin and equalization basin. These units are cleaned approximately once every six years and, therefore, the sludge generation is considered episodic.

Murphy Oil expects no other F waste generation other than sludges generated from the surge and equalization basin cleanout.

NOTICE
If the filmed image is less clear than this Notice it is due to the quality of the document being filmed.

CD2F 003

10112

MURPHY OIL USA, INC.

2500 E. St. Bernard Highway
Meraux, LA 70075

REFINERY DESCRIPTION

Murphy Oil in Mereaux, LA is a refinery that produces primarily gasoline, kerosene, #6 oil, etc., processing 97,000 barrels of crude oil per day, according to the Annual Refining Survey in the Oil and Gas Journal published March 18, 1991. The refinery site is 70 years old (Murphy Oil acquired it in the 1960's). The total area covered by the facility is 564 acres.

WASTEWATER TREATMENT SYSTEM

Since 1986, some modifications to the wastewater treatment plant have been made. The driving force behind these modifications was the legislation of F037-F038 and TC wastes. In the past, the stream from API separator was sent to the equalization basin first, but it has been rerouted directly to the tanks to avoid F037-F038 waste generation.

Murphy is considering replacing the API separator with a modern covered CPI separator. The cover would preclude volatile emissions, and the existing API unit cannot be covered. The same volumes of waste would be generated in the API or CPI.

The Surge Basin does not receive dry weather flow, and therefore Murphy Oil believes it to be exempt.

PETROLEUM REFINING WASTE GENERATION

K waste generation currently totals to 2000-2200 tons/year. The elimination of the equalization basin will lessen generation of F wastes. However, when the basin is taken out of the treatment train, this will have an affect on the stream entering the DAF units. The resulting impact on the K048 waste generation is not yet known, but is anticipated that K048 waste generation will increase significantly.

The facility has not yet treated or disposed of any F037-F038 wastes. Dredging from the units that would possibly be generators of F wastes was highly infrequent in the past. If the equalization basin and surge basin had to be cleaned, it is estimated they might generate 400 tons and 1,000 tons of sludge, respectively.

WASTE MANAGEMENT PRACTICES

K048-K052 wastes were first disposed on a landfarm, which is now closed. Then they were sent to ChemWaste Management. Currently, due to BDAT, they are recycled to a commercial offsite cement kiln.

The equalization basin and surge basin would typically be cleaned once every six years at most. The facility does not have any accumulated wastes to manage. The wastewater treatment units (e.g. API, DAF) that would generate K wastes were also very infrequently cleaned.

Most changes that would affect F or K waste generation at the Murphy Oil facility in Mereaux are still in the planning stage. No further wastewater system modifications or upstream modifications affecting F and K waste generation have been initiated. There as no preference in terms of handling or disposal of F or K wastes.

A Waste Reduction Program is submitted annually.

NOTICE
If the filmed image is less clear than this Notice it is due to the quality of the document being filmed.

CD2F 003

1 0 1 3

· Murphy Oil USA Inc. Meraux Refinery

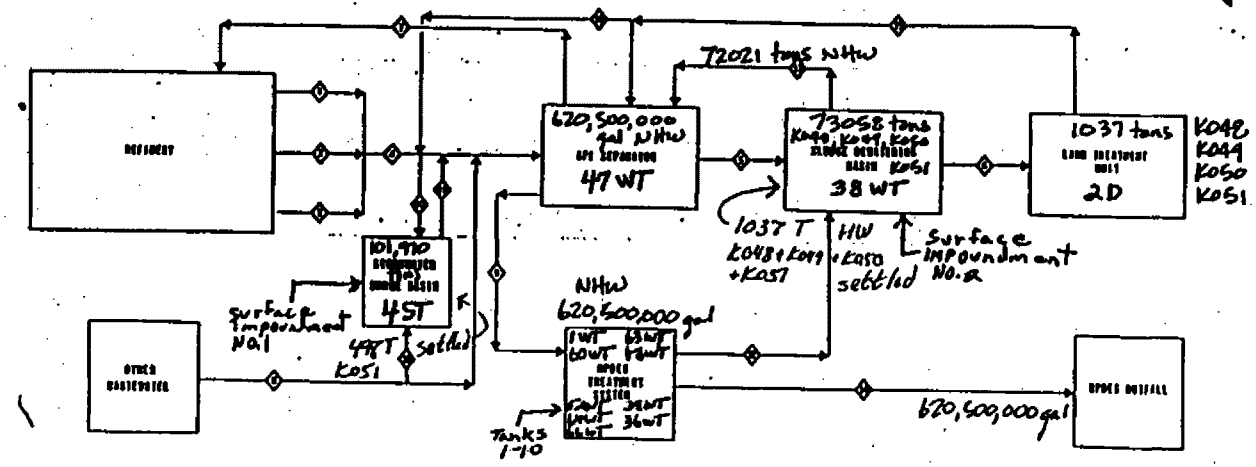

1	2	3	4	5	6	7	8	9	10	11
SLOP OIL	ONLY HEAT EXCHANGED ELEMENTS	INTERMITTENT ONLY WASTE	COMPONENT OF STREAMS 1-3	API SEPARATOR SLUDGE	DEWATERING BASIN SLUDGE	RECOVERABLE OIL	ONLY STORMWATER	ONLY WATER	OILY WATER DIVERSION	SURGE RETURN
12	13	14	15	16						
DEACTIVATED SURGE WATER	SURGE WATER RETURN	TREATED WASTEWATER	LAND TREATMENT STORMWATER	LAND TREATMENT OILY WATER DIVERSION						

FIGURE 0-11-A

WALK, HAYDEL & ASSOCIATES, INC.

MURPHY OIL USA, INC.

MERAUX LOUISIANA

BLOCK FLOW

REVISION 2 [illegible]

(2)

NOTICE
If the filmed image is less clear than this Notice it is due to the quality of the document being filmed.

CD2F 003

10 1 14

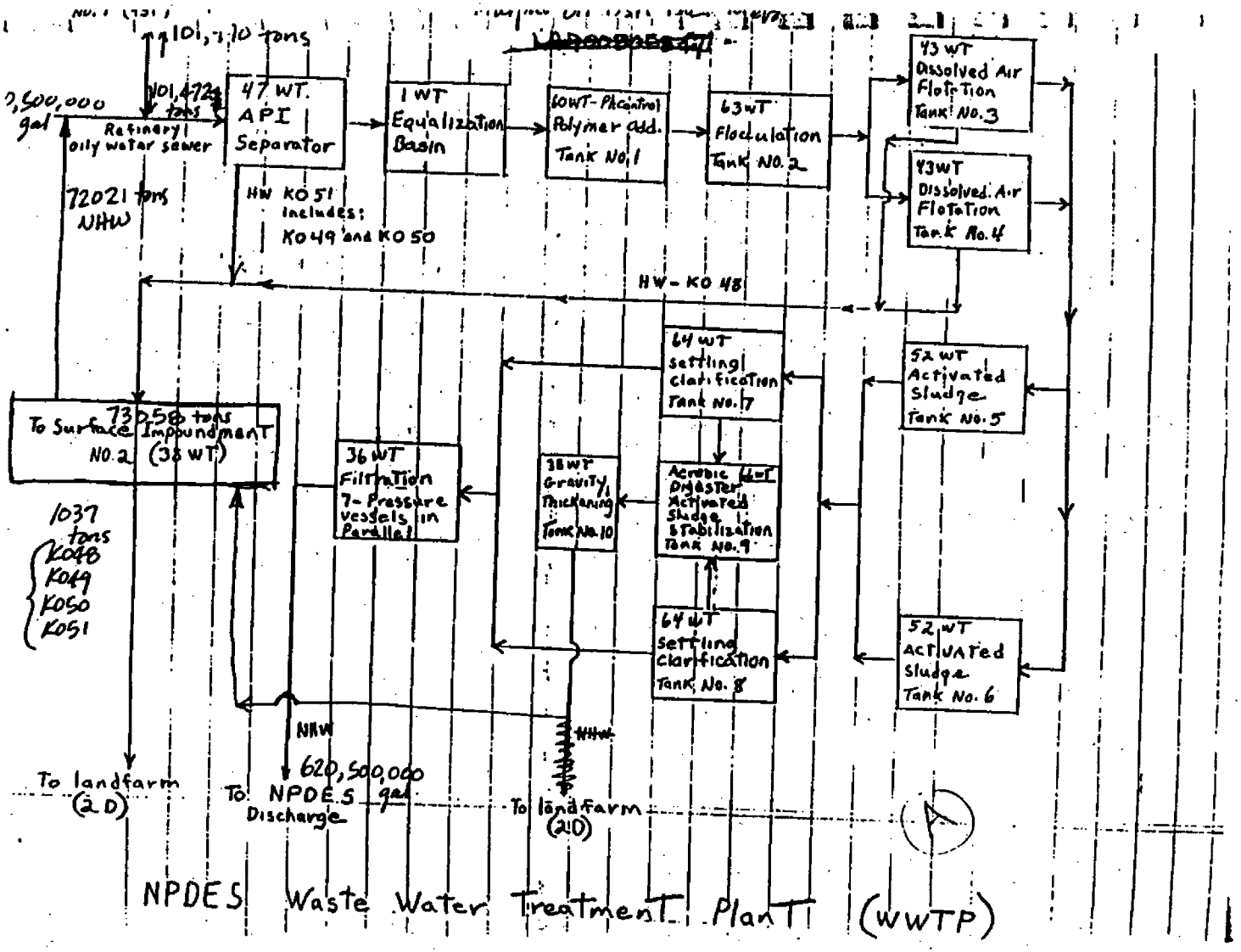

NOTICE
If the filmed image is less clear than this Notice it is due to the quality of the document being filmed.

CD2F 003

10 1 5

F037 AND F038 WASTE CAPACITY ANALYSIS:
DATA USE AND TRACKING SHEET

Refinery: Total Petroleum - Alma Refinery
State: Michigan

Data sources available:

_x_ Petroleum refinery visits/voluntary submission

_x_ National Survey of Hazardous Waste Treatment, Storage, Disposal, and Recycling Facilities (TSDR survey)

__ National Survey of Hazardous Waste Generators

__ Biennial report/state reporting requirements

__ California hazardous waste data base

_x_ Petroleum refinery data base (PRDB)

__ No-migration petitions

Basis for F037 and F038 waste estimation:

EPA used data provided by Total Petroleum (Alma Refinery) because it was the most recent and the only source that describes F037 and F038 waste generation and management. Other sources were used only in comparison with the refinery's data submission.

F037 and F038 waste estimates:

Even though Total Petroleum has an IAF unit in operation, they do not report any generation of F038 wastes because the sludge is returned to the API separator where it reports as either the K051 sludge or the oil layer that is recovered in the slop oil system.

Total petroleum reports no F037 waste generation from the equalization pond because vigorous areation in the pond prevents settling of particulates.

NOTICE
If the filmed image is less clear than this Notice it is due to the quality of the document being filmed.

CD2F 003

1 0 1 6

F037/F038 WASTE CAPACITY ANALYSIS -- REFINERY INTERVIEW

STATE: Michigan

COMPANY: Total Petroleum Inc. Alma Refinery

ADDRESS: East Superior St.
Alma, MI 48801

CONTACT: Benjamin White PHONE NUMBER: (517)463-1161

POSITION: Environmental Engineer (FAX NUMBER): (517) 463-9623

REFERENCE:

DATE: 6/10/91 TIME: 1:40 PM

CALLER: Mary Compton EXTENSION: 8647

faxed survey + letter

Notes: 6/11/91 4:00 - spoke w/ [illegible] [illegible]

- CBI claims?
- Fill out responses to attached interview guide
- Need to fax information to contact person?
- Items contact will send: ~~[illegible]~~ schematic

- Miscellaneous notes:

NOTICE
If the filmed image is less clear than this Notice it is due to the quality of the document being filmed.

CD2F 003

1017

NOTICE
If the filmed image is less clear than this Notice it is due to the quality of the document being filmed.

CD2F 003

10118

F037 AND F038 QUESTIONS

We have developed a preliminary series of questions to aid in our understanding of how the new F037 and F038 waste listing and proposed land ban will affect refineries. These questions involve not only F037 and F038 wastes, but expand to K048-K052 and TC wastes, discuss past and future waste water treatment facility modifications, on site treatment, etc., in order for us to get an understanding of the whole picture and how everything interrelates. In addition to gaining an overall understanding of the issues, we want to discover any unique problems or treatability issues that refineries may have associated with these wastes. Please complete the questions below on separate pieces of paper and mail to Ms. Jo-Ann Bassi (U.S. EPA) before June 1, 1991.

1.0 Waste Water Treatment Facility

1.1 • What is your current configuration (schematic) ?

1.2 • How segregated is your system, stormwater vs. process water?
no segregations.

1.3 • What modifications have been made in the last 5 years?
~~no modifications~~ equalization pot - aerator was put in 5/1/91

1.4 • What were the driving forces behind these modifications?
provide better equalization.

1.5 • What future modifications are planned?
[illegible] treated in [illegible] in lagoon system. [illegible] will equalize [illegible] in [illegible] as haz. waste treatment facility.

1.6 • What are the driving forces behind these modifications?

1.7 • How have the K048-K052, TC and F037/F038 rulings and land bans affected the facility in terms of modifications, operation, capacity, etc.?
Previously used filter pressing - dewatering makes solids small does that way.

2.0 K048-K052 and TC Wastes

2.1 • What is your estimated rate of generation and land disposal of K048-K052 and TC wastes?
K049 - 60 cu yds.
K051 - 240 cu. yds/yr. Heat exchanger bundle cleaning solids - 10 yds in 3 years. Leaded tank bottoms - 100 yds yr

2.2 • How do you currently treat, recycle or dispose of these wastes and are there any foreseeable changes in the treatment, recycling or disposal?
all of them go to commercial disposal facility.

2.3 • How have the waste generation rates changed with the hazardous waste ruling and land ban? no change in gen. rates.

1st Sept. 51 was cleaned - 200 cu. yds - sludge went to landfill after being filter pressed.

2.4 • Have there been any upstream or waste water treatment facility operating changes to reduce the amount of these wastes generated and how effective are these changes? none

2.5 • Will the proposed F037 and F038 land ban affect the amount of these wastes produced? generate more - will become hazardous. not much generated now.

2.6 • How much of these wastes are stockpiled in containers or surface impoundments?
none

2.7 • What are the chemical and physical characteristics of the currently generated and stockpiled wastes (ie. are they dewatered, do they have significant btu value, etc.)?
mostly what goes - solid are either pressed
liquid - liquid sig. btu value.

2.8 • How will these characteristics change with any planned facility modifications and operating changes?
will stay same.

2.9 • What quantity of your secondary treatment waste, such as sludge from the aggressive biological units, is categorized as TC waste?
don't think any of it is.

3.0 F037 and F038 Wastes

3.1 • Is there a current estimate of the amount of F037 and F038 wastes generated?
typically none has been generated
solids or high brine - not [illegible]

3.2 • Is there an estimate of the amount of F037 and F038 wastes stockpiled in containers or surface impoundments?
none

3.3 • What are you currently doing with the stockpiled waste and what are your future plans? will clean before land ban came out

3.4 • What are the chemical and physical characteristics of both the currently generated and the stockpiled wastes?
sludge

3.5 • What is your current treatment, recycle or disposal method and how will this change with the land ban? - reclamation after or take to landfill

3.6 • What are the capacities of these treatment, recycle and disposal methods in relationship to F037 and F038 wastes?

NOTICE
If the filmed image is less clear than this Notice it is due to the quality of the document being filmed.

CD2F 003

1 0 1 9

NOTICE
If the filmed image is less clear than this Notice it is due to the quality of the document being filmed.

3.7 • Are there any planned changes, either physical or operational, to deal with the land ban and how will these changes affect K048-K052 waste generation?
none

3.8 • Is it possible to reduce F037/F038 or K048-K052 wastes by putting more of a load on the aggressive biological units?
probably not.

4.0 General

4.1 • What are your offsite treatment options and are the unique features of your waste that would limit the treatability options?
incineration, taking it to Canada, cement kilns (?), btu value seems lower

4.2 • What modifications have been done or are planned upstream to reduce the amount of waste generated in the waste water treatment facility (eg. pretreatment, source control, segregation, etc.)? try to eliminate putting any solids in sewer.

4.3 • Will the BIF rulings affect any of the current disposal options, onsite, captive or commercial?
yes no longer land disposed offsite

4.4 • Is there a preference on producing F037/F038 wastes or K048-K052 wastes in terms of handling or disposal? no

4.5 • What is the frequency of cleanout for the various waste water treatment units (eg. API, DAF, storage tank, surface impoundments, etc.) ?
3 times/yr; SI - probably 1 in 15 yrs.

While some of these questions are very specific, we realize that initially not all of the exact quantities, etc. will be available. The main purpose of the questions is to get an overall understanding, to get a feel for how much planning is taking place, how much data is available, and what are the unique problems that the refineries will encounter.

land area - property boundaries 1000 acres
refinery - 100 acres.
agr - 1036;

CD2F 003

1020

ALMA REFINERY BLOCK FLOW DIAGRAM

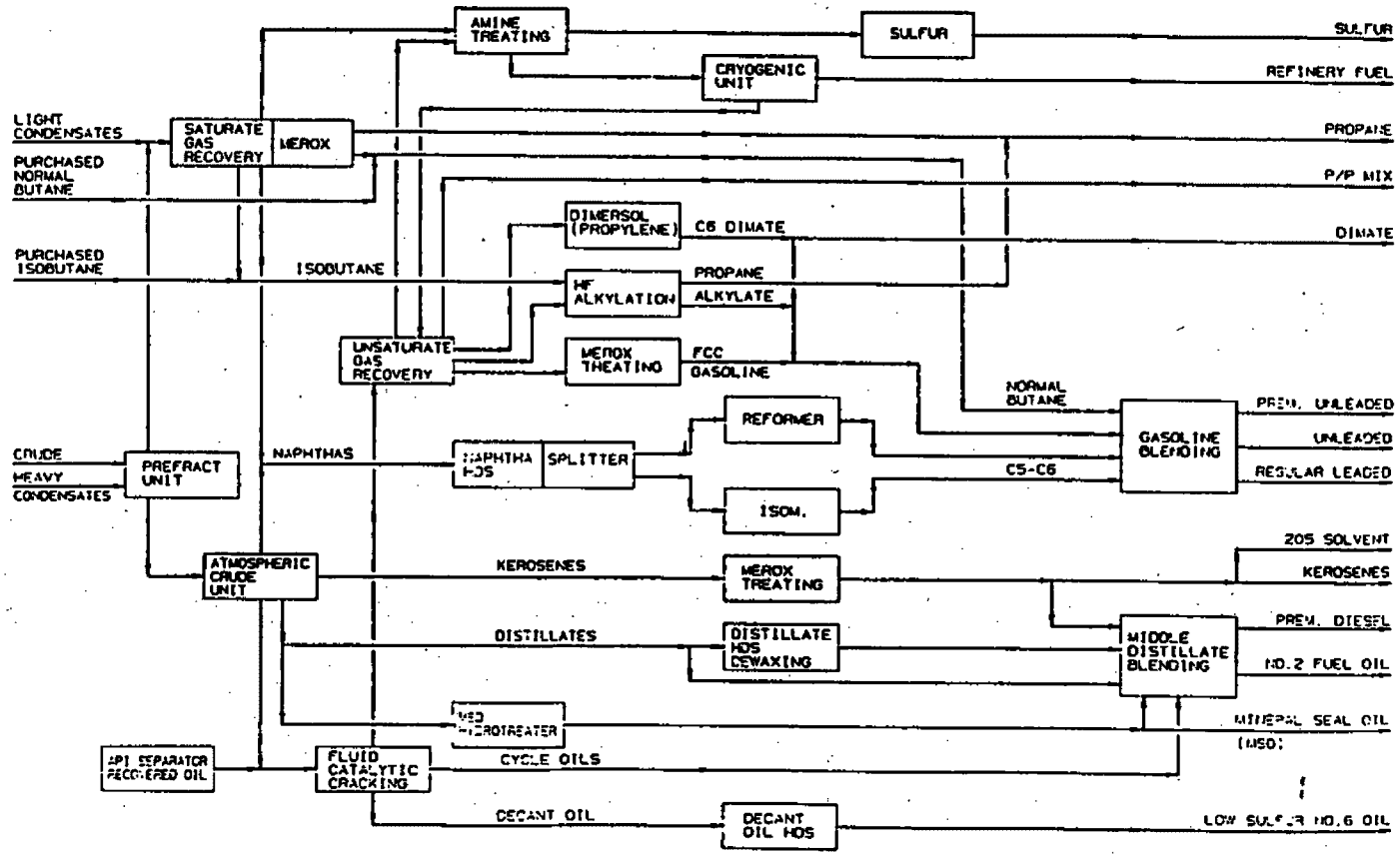

NOTICE
If the filmed image is less clear than this Notice it is due to the quality of the document being filmed.

CD2F 003

1 2 0 1

NOTICE
If the filmed image is less clear than this Notice it is due to the quality of the document being filmed.

CD2F 003

1022

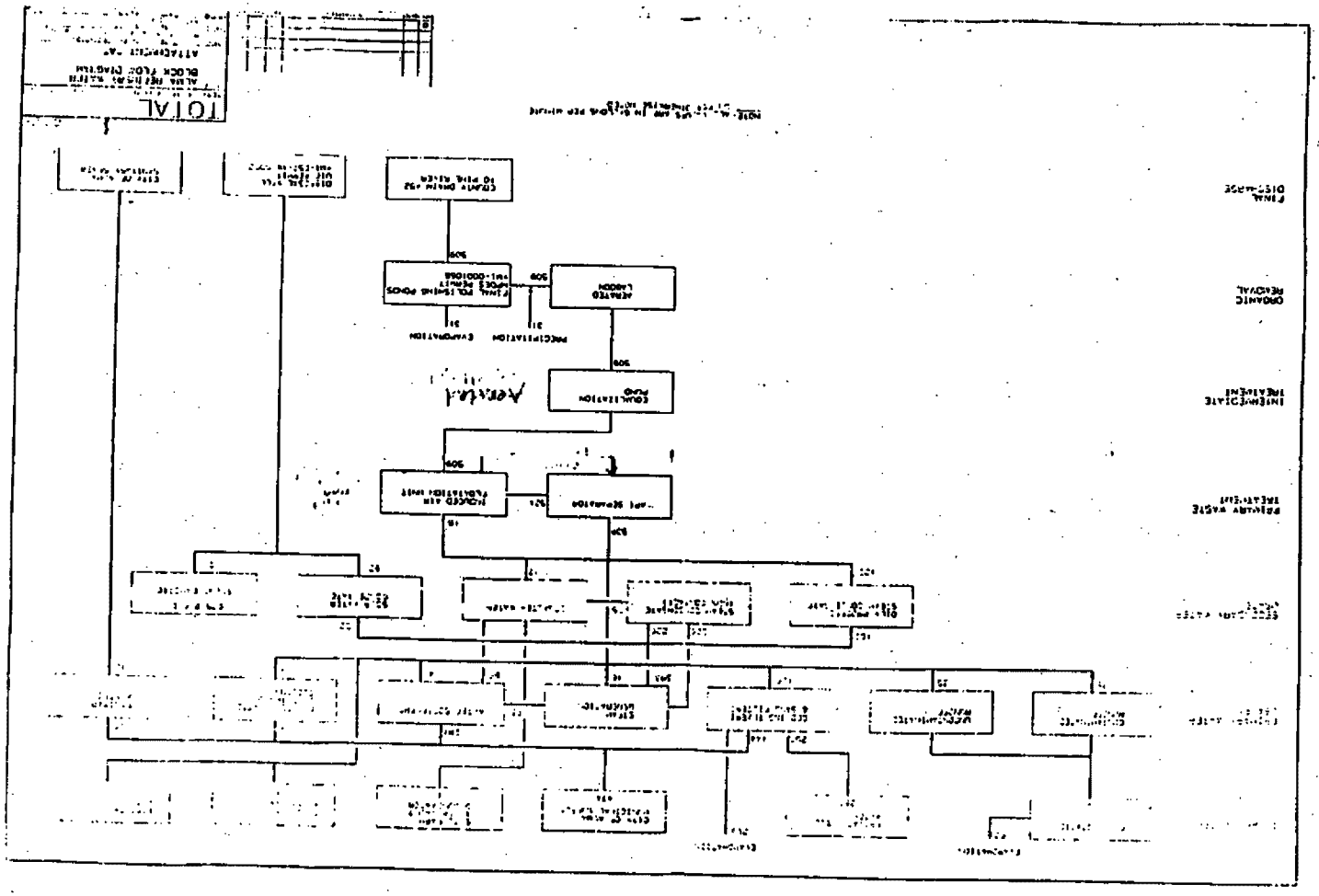

NOTICE
If the filmed image is less clear than this Notice it is due to the quality of the document being filmed.

CD2F 003

1023

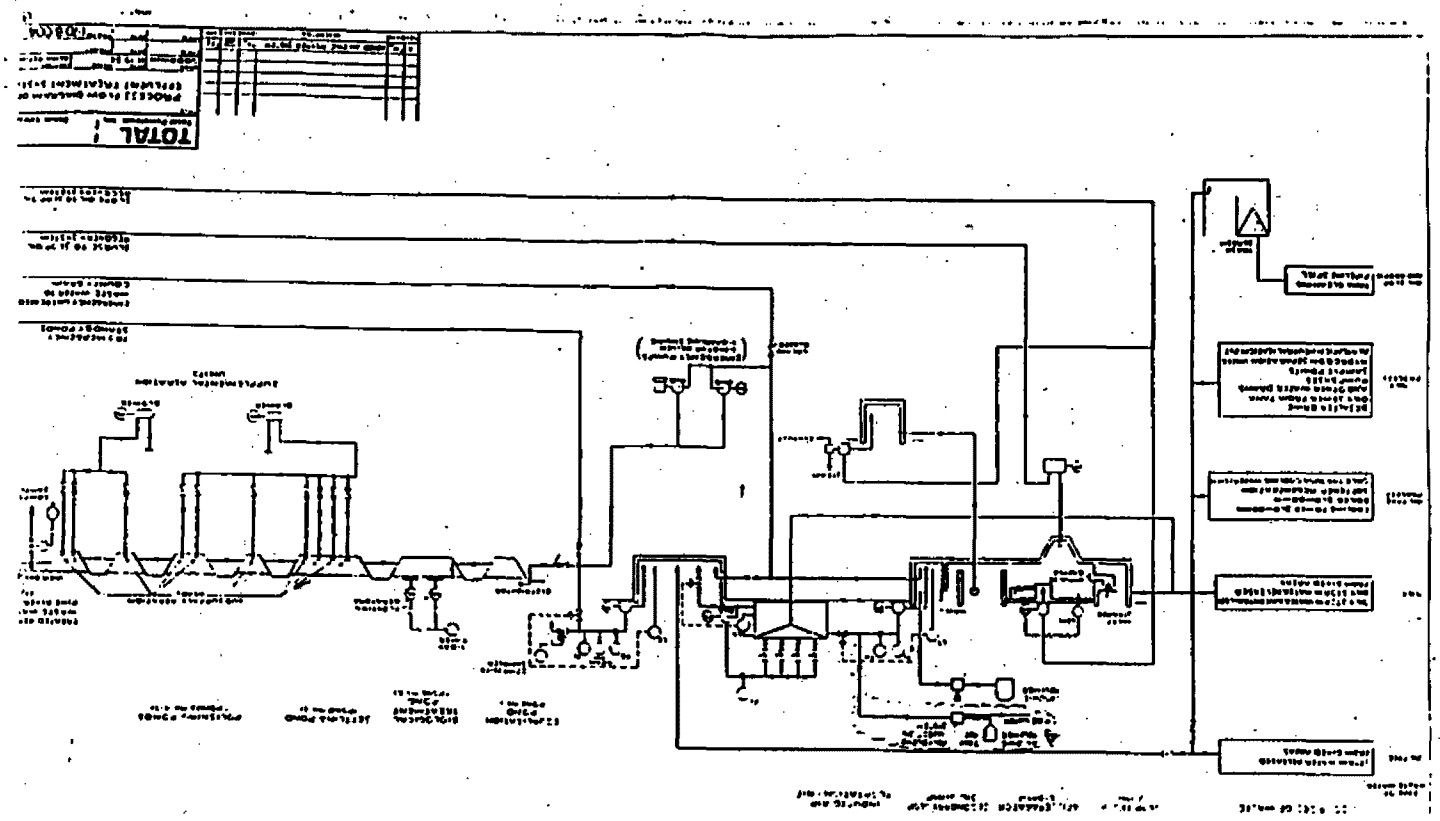

EPA ID. MID005358130

TOTAL PETROLEUM ALMA MICH. WASTE FLOW DETAILED SCHEMATIC

024489

M Williams 3-10

SYSTEM #1

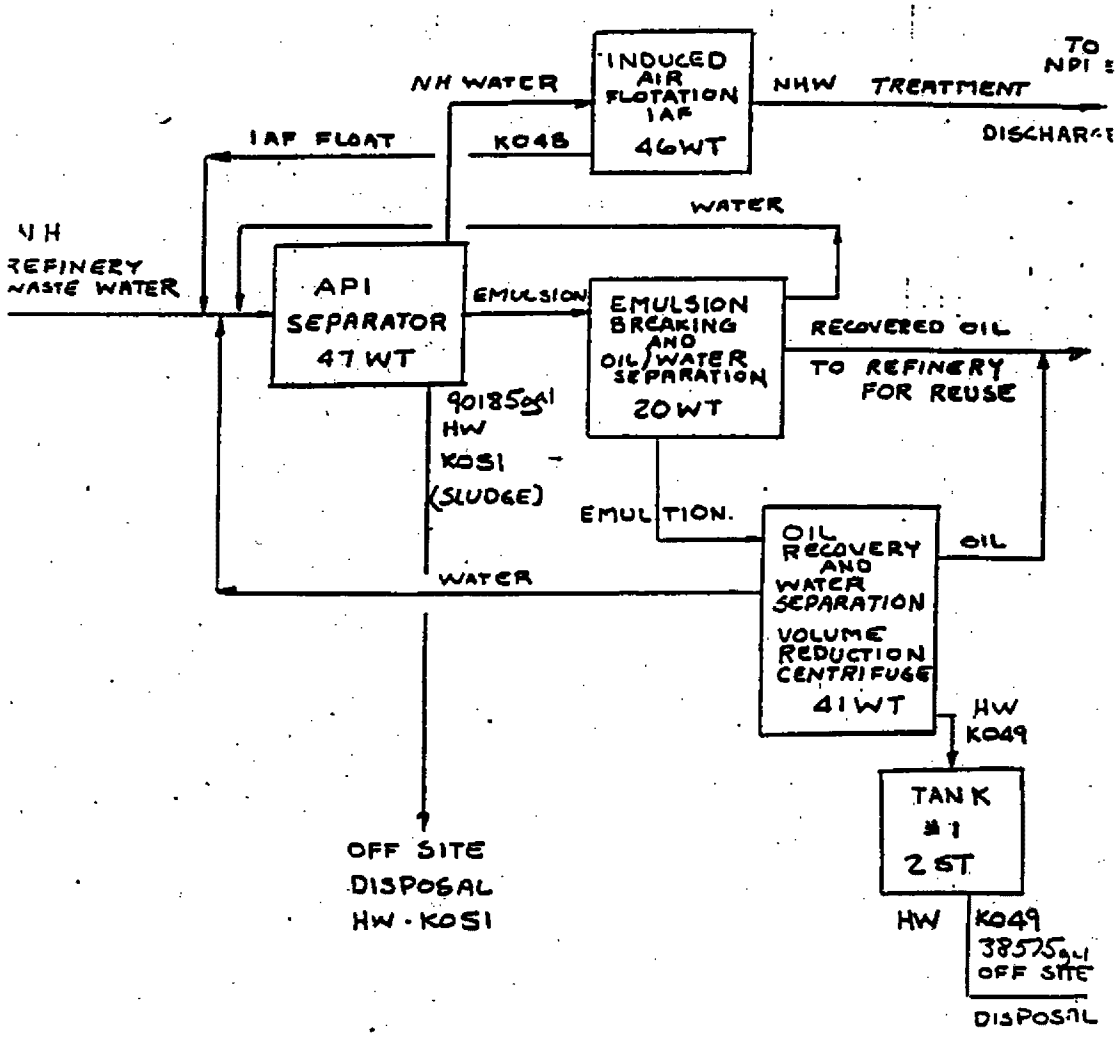

BEW
9-17-87

NOTICE
If the filmed image is less clear than this Notice it is due to the quality of the document being filmed.

CD2F 003

1024

TOTAL PETROLEUM REFINERY ALMA MICIGAN : WASTE FLOW
GENERAL SCHEMATICS

024489

SYSTEM # 1

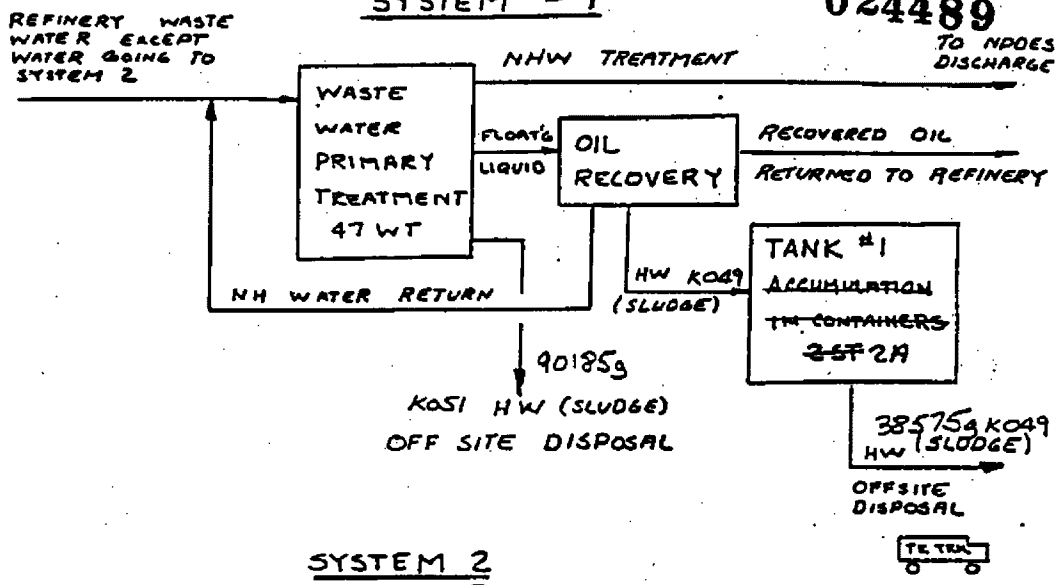

SYSTEM 2

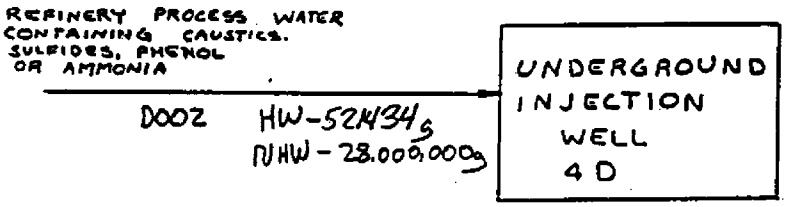

SYSTEM 3

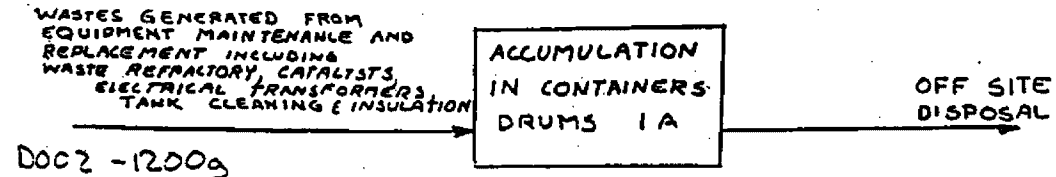

D002 - 1200g
D007 - 3 TON
K052 - 12 TON
XPB3 - 1 TON
XASB - 24 TON

BEW
9-17-87

NOTICE
If the filmed image is less clear than this Notice it is due to the quality of the document being filmed.

CD2F 003

1025

F037 AND F038 WASTE CAPACITY ANALYSIS:
DATA USE AND TRACKING SHEET

Refinery: Chevron - Pascagoula Refinery
State: Mississippi

Data sources available:

_x_ Petroleum refinery visits/voluntary submission

_x_ National Survey of Hazardous Waste Treatment, Storage, Disposal, and Recycling Facilities (TSDR survey)

__ National Survey of Hazardous Waste Generators

__ Biennial report/state reporting requirements

__ California hazardous waste data base

_x_ Petroleum refinery data base (PRDB)

__ No-migration petitions

Basis for F037 and F038 waste estimation:

EPA used data provided by Chevron (Pascagoula refinery) because it was the most recent and the only source that describes F037 and F038 waste generation and management. Other sources were used only in comparison with the refinery's data submission.

F037 and F038 waste estimates:

F037/8 (routine) - 1,000 tons/year from CPI and IAF units, and from sewer cleanouts.

Chevron reports no other F wastes than those identified above.

NOTICE
If the filmed image is less clear than this Notice it is due to the quality of the document being filmed.

CD2F 003

1026

7-12-91 6:16 AM CUSA

6019384230 1# 0 6

A FAX FROM:

Chevron U.S.A. Inc.
P.O. Box 1300
Pascagoula, MS 39568-1300

FAX # (601) 938-4230
or
CTN 938-4230

DATE: 7/11/91

TO:
NAME: Mary Compton
COMPANY: ICF
CITY: Fairfax Virginia
FAX #: 703-218-2669

FROM:
NAME: John Leech
PHONE: (601) 938-4258 -
Pascagoula Refinery

Number of Pages (*including cover*): 6.

MESSAGE: This is the completed survey. If you have any questions, please call.

Confirmation # (601) 938-4202 or 4228

NOTICE
If the filmed image is less clear than this Notice it is due to the quality of the document being filmed.

CD2F 003

1021

NOTICE
If the filmed image is less clear than this Notice it is due to the quality of the document being filmed.

CD2F 003

1028

Pascagoula, Ms.
June 21, 1991

Ms. Mary Compton
ICF Incorporated

Response to F037 and F038 Questionnaire

1.0 Waste Water Treatment Facility

1.1 What is your current configuration?
See Schematic.

1.2 How segregated is your system, stormwater vs. process water?
Storm water and process water are totally segregated.

1.3 What modifications have been made in the last five years?
Three surface impoundments were removed from service; a stormwater ditch was cleaned and replaced with a system of sumps and tanks; an aeration tank was added.

1.4 What were the driving forces behind these modifications?
One pond was closed under RCRA interim status, the other two surface impoundments were removed from service in anticipation of TC regulations; the stormwater ditch was cleaned and put in segregated service in anticipation of primary sludge listing.

1.5 What future modifications are planned?
We plan to install a stripper and aerated tank in the waste water treatment system.

1.6 What are the driving forces behind these modifications?
TC regulations and NESHAPS Benzene Waste Operations regulations.

1.7 How have the K048-K052, TC, and F037/F038 rulings and land bans affected the facility in terms of modifications, operation, capacity, etc.?
We have increased our recycling operations with the addition of a Mobil Oil Sludge Coking system in our Coker. We are adding tankage to the waste water treatment system to handle the aqueous increase due to TC. The refinery's two landfarms were closed under interim status in anticipation of land ban, increasing disposal costs and additional closure costs on these permitted facilities. F037/F038 forced the cleaning and segregation of one stormwater ditch and a rerouting of waters from this ditch to the head of the effluent system, placing an additional load on the system.

NOTICE
If the filmed image is less clear than this Notice it is due to the quality of the document being filmed.

CD2F 003

1029

2.0 K048-K052 and TC Wastes

2.1 What is your estimated rate of generation and land disposal of K048-K052 and TC wastes? 2.2 How do you currently treat, recycle or dispose of these waste and are there any foreseeable changes in the treatment, recycling or disposal?

K048 is recycled in a closed loop system. Rate of generation is 17,000 tons per year. K049 and K051 are recycled in the Mobil Oil Sludge Coking (MOSC) system. Approximately 800 tons are recycled. K052 is generated at approximately 100 tons per year and is sent off-site to a Subtitle C facility. Approximately 200 tons of K050 is handled in the MOSC system or the waste water treatment system. Approximately 1300 tons of TC sludges are generated per year and are handled in MOSC.

2.3 How have the waste generation rates changed with the hazardous waste ruling and land ban?

TC has increased hazardous waste classification by 1300 tons per year.

2.4 Have there been any upstream or waste water treatment facility operating changes to reduce the amount of these wastes generated and how effective are these changes?

We have discontinued use of sandbags to seal sewer drains during maintenance work and have gone to mats and water filled bags.

2.5 Will the proposed F037 and F038 land ban affect the amount of these wastes produced?

Proposed land ban for F037 and F038 will not affect the amount of TC or K-listed wastes produced.

2.6 How much of these wastes are stockpiled in containers or surface impoundments?

None.

2.7 What are the chemical and physical characteristics of the currently generated and stockpiled wastes (i.e., are they dewatered, do they have significant BTU value, etc.)? 2.8 How will these characteristics change with any planned facility modifications and operating changes?

Does not apply.

2.9 What quantity of your secondary treatment waste, such as sludge from the aggressive biological units, is categorized as TC waste?

None.

NOTICE
If the filmed image is less clear than this Notice it is due to the quality of the document being filmed.

CD2F 003

1030

3.0 F037 and F038 Wastes

3.1 Is there a current estimate of the amount of F037 and F038 wastes generated?

Approximately 1000 tons per year.

3.2 Is there an estimate of the amount of F037 and F038 wastes stockpiled in containers or surface impoundments?

We do not believe that we have any sludges in our surface impoundments that meet the qualifications for F037 and F038.

3.3 What are you currently doing with the stockpiled waste and what are your future plans?

N/A.

3.4 What are the chemical and physical characteristics of both the currently generated and the stockpiled wastes?

Raw sludge.

3.5 What is your current treatment, recycle or disposal method and how will this change with the land ban?

Much of the F037 and F038 wastes will be recycled in the MOSC system. Some may be possible candidates for a fuel blending program in a properly permitted off-site industrial furnace. When land ban sets constituent limits on the organics, any off-site treatment/disposal will probably be through incineration in a Subtitle C facility.

3.6 What are the capacities of these treatment, recycle, and disposal methods in relationship to F037 and F038 wastes?

The MOSC system was originally sized for the K-listed wastes with some additional capacity for characteristic wastes. The inclusion of Toxicity Characteristic and F037/F038 waste will tax the system to its limit. Any excess will have to be treated and/or disposed in a subtitle C facility. Recycle priorities will be based in part on the cost of treatment and disposal in off-site facilities.

3.7 Are there any planned changes, either physical or operational, to deal with the land ban and how will these changes affect K048-K052 waste generation?

No plans have been formulated at this time.

3.8 Is it possible to reduce F037/F038 or K048-K052 wastes by putting more of a load on the aggressive biological units?

No.

NOTICE
If the filmed image is less clear than this Notice it is due to the quality of the document being filmed.

4.0 General

4.1 What are your offsite treatment options and are there unique features of your waste that would limit the treatability options?

Solidification/encapsulation prior to landfilling, fuel blending if BTU value is high enough in a properly permitted off-site industrial furnace. There are no unique features of our wastes that would limit the treatability options.

4.2 What modifications have been done or are planned upstream to reduce the amount of waste generated in the waste water treatment facility (eg. pretreatment, source control, segregation, etc.)?

Segregation has already been effected. We are working toward source control wherever possible.

4.3 Will the BIF rulings effect any of the current disposal options, onsite, captive or commercial?

BIF rulings may increase the cost of fuel blending as an alternative to incineration.

4.4 Is there a preference on producing F037/F038 wastes or K048-K052 wastes in terms of handling or disposal?

None.

4.5 What is the frequency of cleanout for the various waste water treatment units (eg. API, DAF, storage tank, surface impoundments, etc.)?

Cleanout is dependent on operational parameters. K048 is recycled continuously. APIs arescheduled to be cleaned, at a minimum, quarterly.

CD2F 003

1 0 3 1

SCHEMATIC OF WATER FLOW

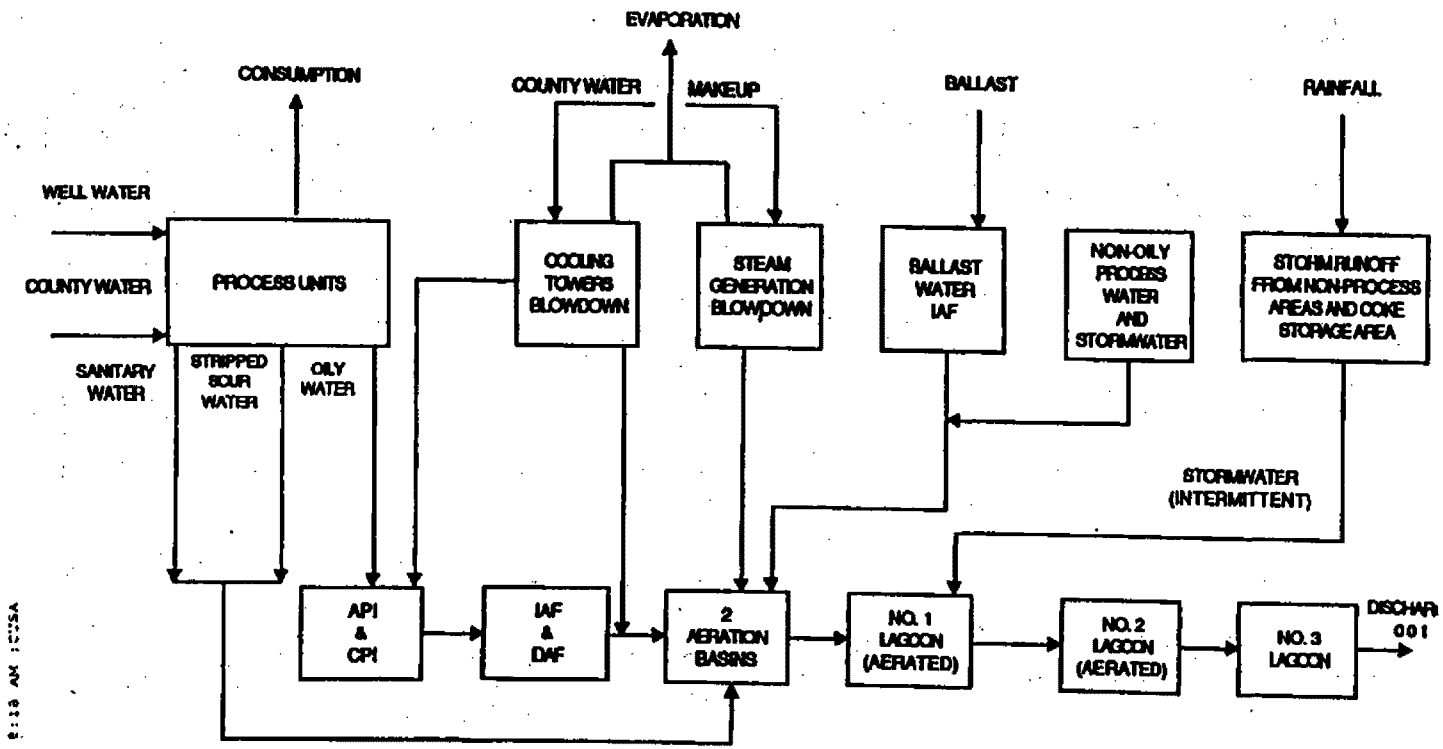

ESH #57-2484

NOTICE
If the filmed image is less clear than this Notice it is due to the quality of the document being filmed.

CD2F 003

2E01

F037 AND F038 WASTE CAPACITY ANALYSIS:
DATA USE AND TRACKING SHEET

Refinery: BP Oil - Lima Refinery
State: Ohio

Data sources available:

_x Petroleum refinery visits/voluntary submission

_x National Survey of Hazardous Waste Treatment, Storage, Disposal, and Recycling Facilities (TSDR survey)

__ National Survey of Hazardous Waste Generators

__ Biennial report/state reporting requirements

__ California hazardous waste data base

_x Petroleum refinery data base (PRDB)

__ No-migration petitions

Basis for F037 and F038 waste estimation:

EPA used data provided by BP Oil (Lima Refinery) because it was the most recent and the only source that describes F037 and F038 waste generation and management. Other sources were used only in comparison with the refinery's data submission.

F037 and F038 waste estimates:

F037 (routine) = 3,400 tons/year from stormwater/process water impoundments, which will close with waste in place. The F037 sludges would then be generated in tanks.

F037 (one-time) = 10,000 tons from closure of stormwater/process water impoundments, which had not been cleaned for about two years.

BP Oil Lima does not anticipate generating F038 wastes.

NOTICE
If the filmed image is less clear than this Notice it is due to the quality of the document being filmed.

CD2F 003

1033

NOTICE
If the filmed image is less clear than this Notice it is due to the quality of the document being filmed.

BP OIL
LIMA REFINERY
1150 SOUTH METCALF STREET
LIMA, OHIO 45804

DATE: June 20, 1991

TO: Mary Compton
ICF, Incorporated

FROM: J. Grammas
BP Oil - Lima Refinery

Total pages being sent (including this page) 9

If there is a problem with this fax, please contact LeAnn Mason, (419) 226-2386 (fax phone number (419) 226-2740).

CD2F 003

10374

BP OIL

BP Oil Company
1160 South Metcalf St
Lima, Ohio 45804-1199

June 20, 1991

Mary Compton
ICF, Incorporated
9300 Lee Highway
Fairfax, Virginia 22031-1207

S6-91-23

Dear Ms. Compton:

BP Oil - Lima Refinery is responding to your F037 and F038 questionnaire to aid you as a contractor to U.S. EPA to gain information on the need for a national capacity variance for these wastes. Attached please find the responses to the questionnaire, our sewer schematic and our wastewater process schematic. If clarification or more information is needed, please call me at (419) 226-2592 or Gary Vonderembse at (419) 226-2744.

Jerome Grammas, P.E.
HSEQ Environmental Manager

JG/lvm/S6-91-23
Attachments

cc: B. C. Gelsinger
G. L. Vonderembse
A. L. Sprague
R. L. Wilcox
J. W. Bannister
File: S6-91-23

NOTICE
If the filmed image is less clear than this Notice it is due to the quality of the document being filmed.

CD2F 003

1035

NOTICE
If the filmed image is less clear than this Notice it is due to the quality of the document being filmed.

CD2F 003

1036

1.0 Waste Water Treatment Facility

1.1 See attached

1.2 Stormwater and process water are currently combined.

1.3 Modifications to the sewer system in the last five years

A. Installation of a 54" - 60" diversion line from the North Sewer to Primary Pond (see attached).

1.4 Driving forces behind these modifications

- Removal of one stormwater/process water impounding pond prior to the TC rule taking effect
- Lower VOC emissions
- Environmental awareness by BP (proactive approach)

1.5 Future modifications

A. Twin 2MM gal off-spec tanks are currently under construction and should be commissioned this fall.

B. Close Primary and C Ponds - replace with tankage and/or MTR impoundments, then remove both ponds from service.

1.6 Driving Forces

A. NESHAP/Benzene Regs

B. TC Rule/Primary Sludge

1.7 A. K048-52 land disposal restrictions have increased disposal costs for these wastes. The operation associated with the preparation of the material for disposal is more time consuming and costs more as well.

B. TC rule - increased costs associated with the development of closure plans for the two impoundments that are required to be removed from service by 3/94. The replacement units will require significant capital expenditures for construction - also, must find a suitable site of adequate size for construction of new unit.

NOTICE
If the filmed image is less clear than this Notice it is due to the quality of the document being filmed.

C. F037/38 - Preparation of a Class 2 Permit Modification - this effort will be required for the two impounding ponds already destined to be closed under the TC rule - duplication of effort due to overlap of rulings.

2.0 K048-52 and TC Wastes

2.1 Rate of Generation

	K048-K-52	TC
w/o Sludge Dryer	11-12 tons/day or 4M tons/yr	Misc. Drums - 30 tons/yr
w Sludge Dryer	5-6 tons/day or 2M tons/yr	Filter Clays- 75-150 tons/yr

2.2 K048-52 wastes meet minimum heating value criteria of 5,000 BTU/#.

Belt press cake is blended with oil into a heavy waste oil matrix and is sent to a cement kiln for resource recovery as a supplemental fuel.

TC wastes are sent to disposal facilities for incineration or to be fuel blended. Do not typically landfill unless no other choice.

2.3 Waste generation rates have not changed with the hazardous waste ruling and land ban. When the sludge dryer is operational, the belt press cake should be reduced 50% (estimated). With the sludge dryer operational, this will allow the refinery to pursue a broker to handle the dried belt press cake as a product, not a hazardous waste subject to regulation; under a recently granted coker exemption by OEPA.

TC waste generation rates have increased due to the TC Rule regulating two surface impoundments as hazardous waste management units. These wastes, however, are treated at the wastewater treatment plant.

2.4 Upstream or wastewater treatment facility operating changes to reduce the amount of these waste generated:

- Elimination of the coke pile
  Coke was previously stored on the ground prior to being
  (89) loaded for shipment (20-25% reduction in K-wastes generated)

- Trolumen staging on a concrete pad
  Previously stored on the ground prior to handling
  (90) (10-15% reduction in K-waste generation)

CD2F 003

1031

NOTICE
If the filmed image is less clear than this Notice it is due to the quality of the document being filmed.

2.5 Proposed F037/38 land ban will not affect the amount of these wastes produced. Even though the origin of these wastes are from essentially the same process, they currently can be handled differently, i.e., K-wastes have LDRs and F037/38 do not. Also, the K-wastes do not test hazardous for lead or chrome under TCLP even though they are listed hazardous for these constituents; therefore any and all wastes should be subject only to TC regs and handled accordingly.

2.6 K-wastes - 500 tons currently in inventory at the Waste Pile Building

TC Wastes

- Misc. drums awaiting analytical results (not significant)
- 30,000 yd^3 of stabilized sludge in D-Pond (needs to be tested for TCLP).

2.7 K-Wastes - ran through a belt press (sludge dryer not in operation yet)

- 5,000 + BTU/# before drying process
  Again, they do not test hazardous for lead or chrome analysis and to date shows TC hazardous for two other constituents.
- Stabilized waste in D-Pond has been dewatered
- Doubtful as to significant heating value
- Still to be tested for TCLP

2.8 Installation of a segregated NESHAP/Benzene sewer may reduce TC characteristic noted in K-wastes (needs to be looked at) and will lower benzene loading to TC regulated surface impoundments.

2.9 No quantity of sludge from the aggressive biological units is categorized as TC waste.

3.0 F037 and F038 Wastes

3.1 Current estimated amount of generation

As noted in Part A ~~165 tons F037~~ ~~1 ton F038~~
Permit

Part A permit 3400 tons/yr F037 Pugicluse in place
Close by March 1994
has not been cleaned for about 2 years. No F038 wastes
- Gary Vonderembse
8/19/91

CD2F 003

1038

NOTICE
If the filmed image is less clear than this Notice it is due to the quality of the document being filmed.

3.2 There is no amount of these wastes stockpiled in containers or surface impoundments. Above estimates are for the TC regulated impoundments that also fall under Primary Sludge regs.

Question is --> How will these regs affect closed impoundments?
i.e., Are they subject to TC and/or Primary Sludge?

3.3 There are no stockpiled wastes, but the wastes that accumulate in these impoundments prior to their removal from service will be closed in place through risk assessment.

3.4 No information on pond bottom sludges subsequent to TC rule effective date.

3.5 Currently, these wastes would be stabilized/tested/sent to a Class I landfill since no LDRs, but our intent is to risk assess by in-situ closure.

3.6 No information available regarding capacities for methods of treatment, recycle, or disposal for these wastes to my knowledge.

3.7 The same upstream changes for K-wastes impact the generation of these wastes. The origin is the same; it is more a function of where the wastes are collected. The key is keeping the sewer loading of solids to a minimum.

3.8 Most K-wastes will test hazardous due to the oily constituents. Biological treatment has shown to be an effective means of treating these compounds. Allowing more oily particulate pass through upstream process units could potentially reduce K-wastes and not have an adverse impact on wastewater.

4.0 General

4.1 In general, fuel blending is proving to be a successful disposal option for K-wastes. Not certain why F037 and 038 are regulated. Is it benzene? Are these wastes subject to TC regs as well?

4.2 Source Control

- Elimination of coke pile
- Trolumen staging in a concrete bay
- NESHAP/Benzene sewer

CD2F 003

1039

NOTICE
If the filmed image is less clear than this Notice it is due to the quality of the document being filmed.

4.3 BIF will have no impact. If BIF incorporates current kiln, then a major rethink of K-waste management is needed.

4.4 Prefer to call it F037/38 versus K-waste since there are no LDRs. When LDRs are finalized for F037/38 wastes, it makes no difference as both are from the same system and not likely that either fails TCLP (at least not what they are listed for).

4.5 Cleanout frequency - not on a set schedule - as required for efficient operation or for maintenance activities.

GLV/lvm/S6-91-23
6/20/91

CD2F 003

1040

Lima Refinery

Proposed Sewer Modifications

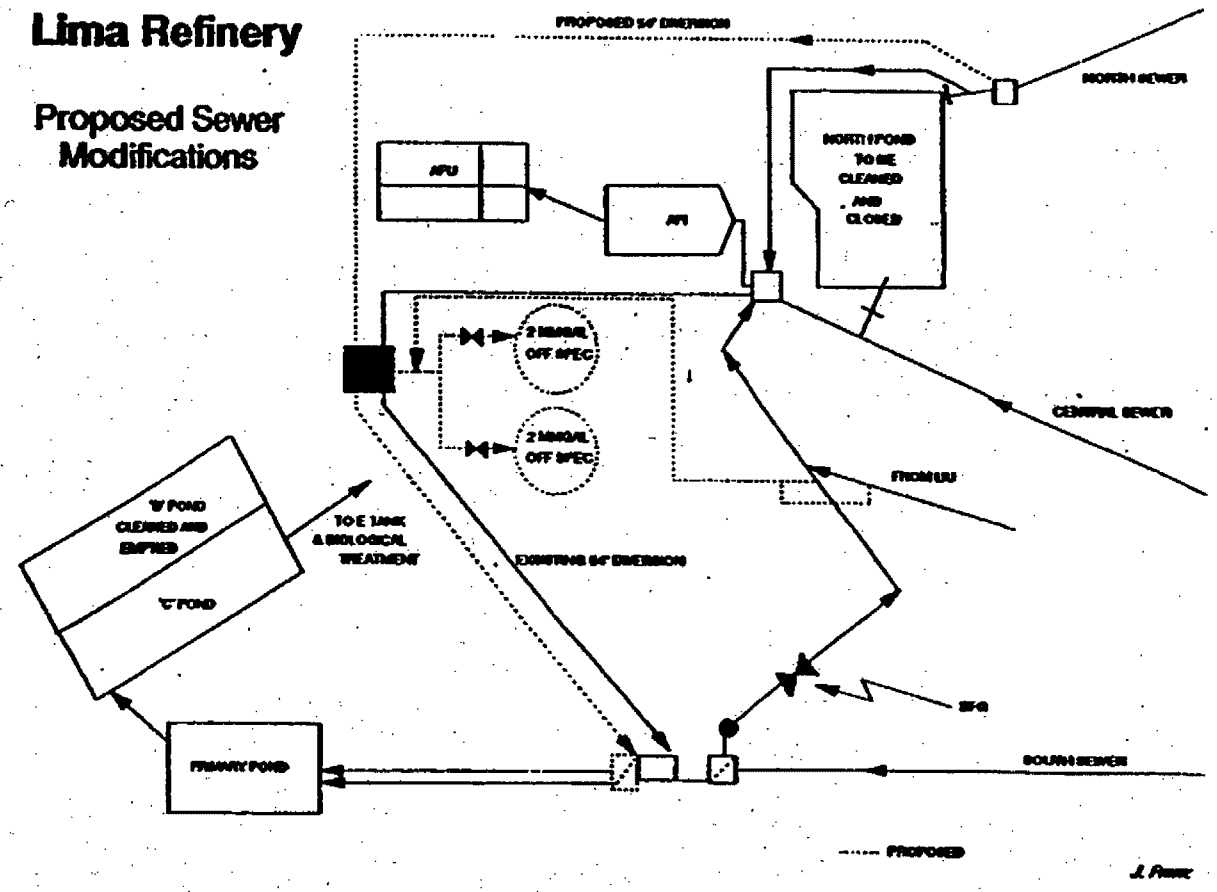

NOTICE
If the filmed image is less clear than this Notice it is due to the quality of the document being filmed.

SENT BY:Xerox Telecopier 7021 ; 8-20-01 ; 4:31PM ; 4182262740→ 7032182866;# 8

LIMA REFINERY WASTEWATER PLANT

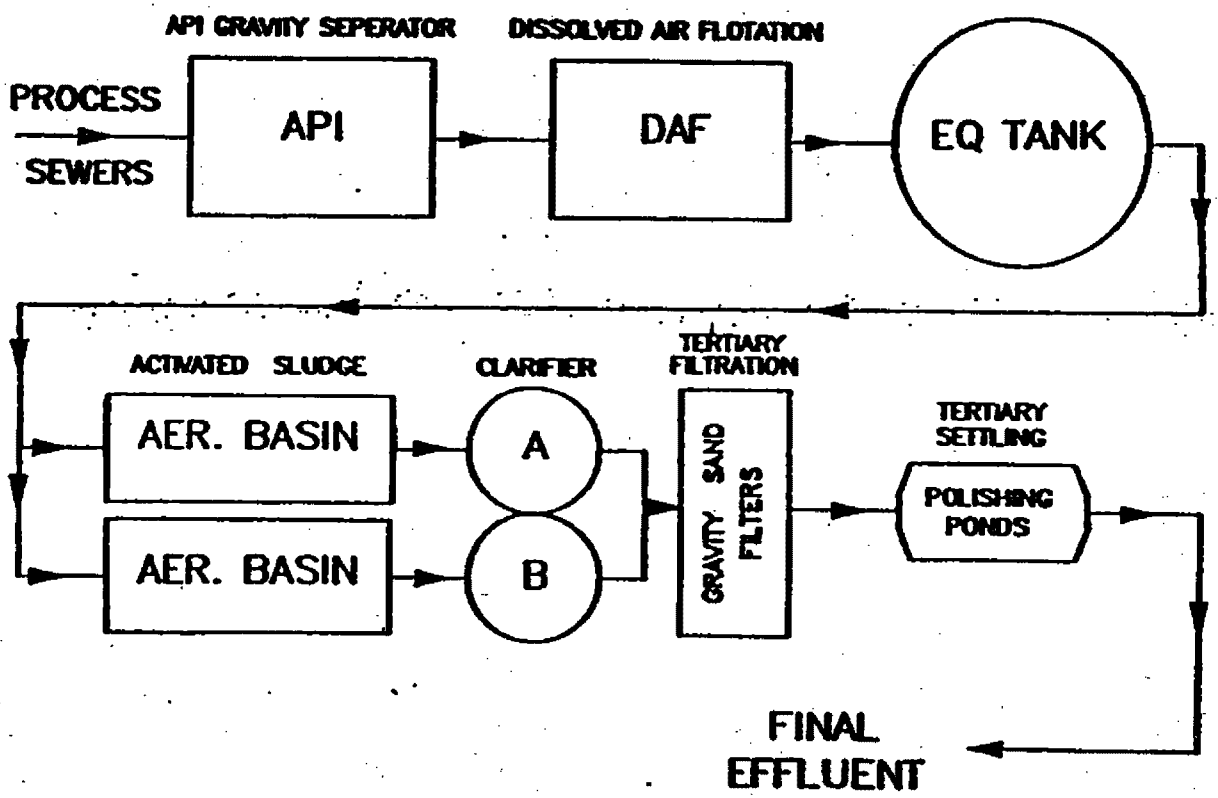

NOTICE
If the filmed image is less clear than this Notice it is due to the quality of the document being filmed.

CD2F 003

10 of 2

Detailed Schematic #1

EMULSION TREATMENT SYSTEM 22WT

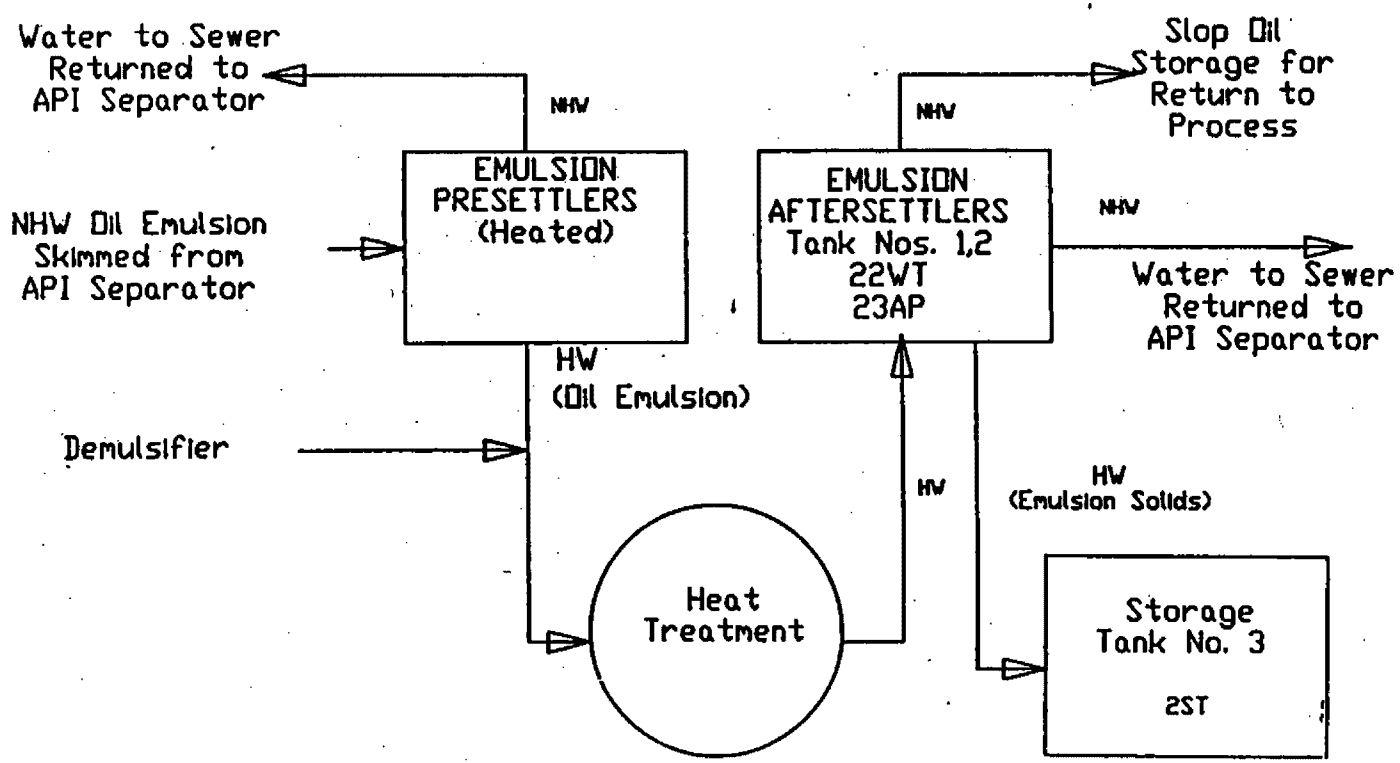

NOTICE
If the filmed image is less clear than this Notice it is due to the quality of the document being filmed.

CD2F 003

10 4 3

038265

Detailed Schematic #2

Gravity Thickening System 38WT

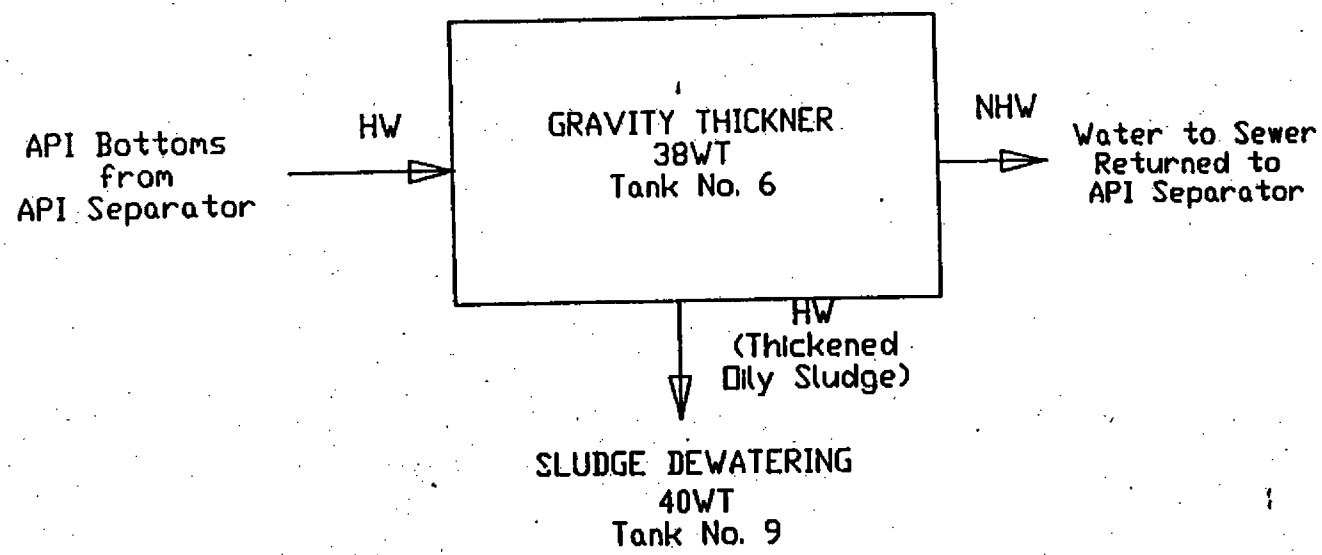

NOTICE
If the filmed image is less clear than this Notice it is due to the quality of the document being filmed.

CD2F 003

10 h 4

Detailed Schematic #3

SLUDGE STORAGE, TREATMENT, AND DEWATERING

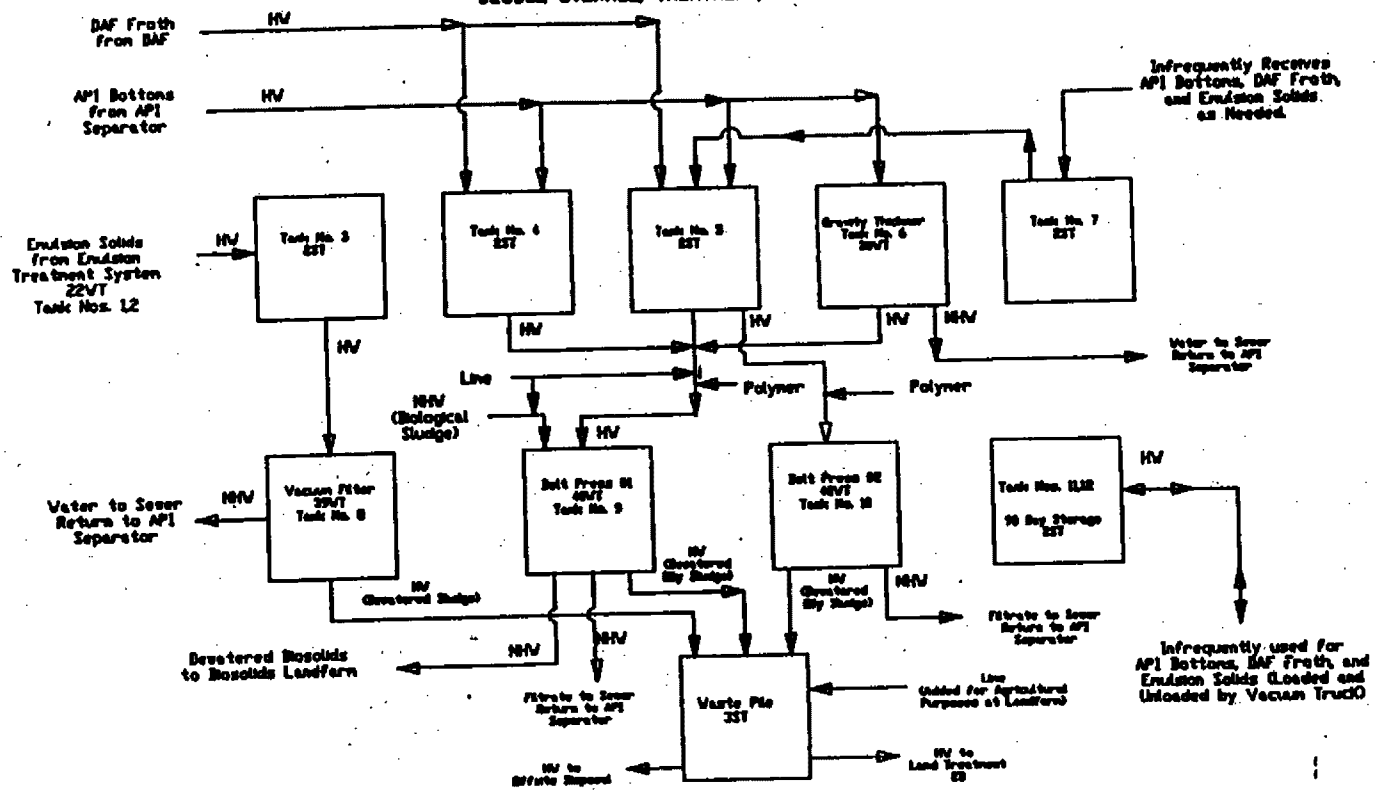

NOTICE
If the filmed image is less clear than this Notice it is due to the quality of the document being filmed.

CD2F 003

10 of 5

PHONE LOG FOR F037 AND F038 CAPACITY ANALYSIS

CONTACT:	Gary Vonderembse (BP Oil, Lima, OH)
PHONE NUMBER:	(419) 226-2744
CALLER:	James Hsu
DATE:	8/19/91
SUBJECT:	F037/8 waste generation and management

Voluntary information submitted to EPA reports 166 tons of F waste generation in surface impoundments. This amount was underestimated and should be replaced by the following estimation:

> BP Oil Lima estimates that 3,400 tons/yr of F037 sludge accumulates in their impoundments. These impoundments, which will close in 1994, have not been cleaned out for about 2 years; therefore, if the impoundments are dredged prior to the land ban in 1992 will have accumulated 3 years of sludge, which amounts to a clean out quantity of 10,000 tons.

NOTICE
If the filmed image is less clear than this Notice it is due to the quality of the document being filmed.

CD2F 003

1045

F037 AND F038 WASTE CAPACITY ANALYSIS:
DATA USE AND TRACKING SHEET

Refinery: Chevron - Cincinnati Refinery
State: Ohio

Data sources available:

_x_ Petroleum refinery visits/voluntary submission

_x_ National Survey of Hazardous Waste Treatment, Storage, Disposal, and Recycling Facilities (TSDR survey)

__ National Survey of Hazardous Waste Generators

__ Biennial report/state reporting requirements

__ California hazardous waste data base

_x_ Petroleum refinery data base (PRDB)

__ No-migration petitions

Basis for F037 and F038 waste estimation:

EPA used data provided by Chevron (Cincinnati Refinery) because it was the most recent and the only source that describes F037 and F038 waste generation and management. Other sources were used only in comparison with the refinery's data submission.

F037 and F038 waste estimates:

No F wastes are generated at the Chevron Cincinnati Refinery because the facility has shutdown.

NOTICE
If the filmed image is less clear than this Notice it is due to the quality of the document being filmed.

CD2F 003

1047

Not a petroleum refinery since 1936
wastes generated are not K or F wastes.
All the sewer system upstream of the oil/water separator
was cleaned out prior to listing date of 5/3/91.
Some of sewer lines still process runoff - would continue
to collect but not classified
S1 upstream of ABT - cleaned out prior to listing date
API separator - system collects slop oil; has been cleaned several
times since operation was shut down → not classified
a lot of remediation activities.

NOTICE
If the filmed image is less clear than this Notice it is due to the quality of the document being filmed.

CD2F 003

1048

NOTICE
If the filmed image is less clear than this Notice it is due to the quality of the document being filmed.

CD2F 003

1049

F037 AND F038 WASTE CAPACITY ANALYSIS:
DATA USE AND TRACKING SHEET

Refinery: BP Oil - Marcus Hook Refinery
State: Pennsylvania

Data sources available:

_x_ Petroleum refinery visits/voluntary submission

_x_ National Survey of Hazardous Waste Treatment, Storage, Disposal, and Recycling Facilities (TSDR survey)

__ National Survey of Hazardous Waste Generators

_x_ Biennial report/state reporting requirements

__ California hazardous waste data base

_x_ Petroleum refinery data base (PRDB)

__ No-migration petitions

_x_ Comments form proposed rule

__ Organic TC Survey

Basis for F037 and F038 waste estimation:

EPA used data provided by BP Oil (Marcus Hook Refinery) because it was the most recent and the only source that describes F037 and F038 waste generation and management. Other sources were used only in comparison with the refinery's data submission.

F037 and F038 waste estimates:

F038 (routine) = 200 tons/yr of sludge generated from primary filters.

F038 (one-time) = 9,400 tons from closure of a surface impoundment. The surface impoundment will be replaced by holding tanks, however, these tanks are cleaned out every two to five years, and thus, the tank cleanout sludge would be generated periodically.

BP Oil reports no other F wastes than those identified above.

According to more recent information from the comments to the proposed rule, this facility indicated that it would generate the following quantities of surface impoundment sludges during the indicated time periods:

NOTICE
If the filmed image is less clear than this Notice it is due to the quality of the document being filmed.

BP OIL
MARCUS
HOOK

F037 AND F038 QUESTIONS

We have developed a preliminary series of questions to aid in our understanding of how the new F037 and F038 waste listing and proposed land ban will affect refineries. These questions involve not only F037 and F038 wastes, but expand to K048-K052 and TC wastes, discuss past and future waste water treatment facility modifications, on site treatment, etc., in order for us to get an understanding of the whole picture and how everything interrelates. In addition to gaining an overall understanding of the issues, we want to discover any unique problems or treatability issues that refineries may have associated with these wastes.

Waste Water Treatment Facility

- What is your current configuration (schematic) ?
- How segregated is your system, stormwater vs. process water? 2/3 of the Refinery Combines stormwater and process water and 1/3 of the refinery has separate stormwater and process water sewers
- What modifications have been made in the last 5 years? A new wastewater treatment Facility has been constructed which includes 1°, 2°, & 3° treatment.
- What were the driving forces behind these modifications? The previous treatment plan was unable to effectively handle shock loading of the system
- What future modifications are planned? Impounding tanks will replace a stormwater impoundment. Segregated sewers in our Tank Farm Area.
- What are the driving forces behind these modifications? Compliance.
- How have the K048-K052, TC and F037/F038 rulings and land bans affected the facility in terms of modifications, operation, capacity, etc.? Only modifications necessary were related to manpower to manage wastes properly and the cost involved to add a second solids dewatering system to manage non-hazardous wastes.

K048-K052 and TC Wastes

- What is your estimated rate of generation and land disposal of K048-K052 and TC wastes? Generate 1800 tons/yr of (K)-waste
- How do you currently treat, recycle or dispose of these wastes and are there any foreseeable changes in the treatment, recycling or disposal? Incineration. No change in the foreseeable future.
- How have the waste generation rates changed with the hazardous waste ruling and

CD2F 003

1059

land ban? we were able to lower them slightly by segregating wastes that did not fall into the hazardous category.

NOTICE
If the filmed image is less clear than this Notice it is due to the quality of the document being filmed.

CD2F 003

1051

NOTICE
If the filmed image is less clear than this Notice it is due to the quality of the document being filmed.

- Have there been any upstream or waste water treatment facility operating changes to reduce the amount of these wastes generated and how effective are these changes? Yes there have been changes. We are still evaluating their effectiveness but we feel they will have only a small effect on our total generation.
- Will the proposed F037 and F038 land ban affect the amount of these wastes produced? Yes
- How much of these wastes are stockpiled in containers or surface impoundments? We have a 5 million gallon surface impoundment which is approximately 45% full of F038 solids.
- What are the chemical and physical characteristics of the currently generated and stockpiled wastes (ie. are they dewatered, do they have significant btu value, etc.)? They are not dewatered at this point and do not have significant Btu value.
- How will these characteristics change with any planned facility modifications and operating changes?
- What quantity of your secondary treatment waste, such as sludge from the aggressive biological units, is categorized as TC waste? Relatively small amount.

F037 and F038 Wastes

- Is there a current estimate of the amount of F037 and F038 wastes generated? No
- Is there an estimate of the amount of F037 and F038 wastes stockpiled in containers or surface impoundments? 0.25 million gallons of raw F038 sludge contain in our surface impoundment.
- What are you currently doing with the stockpiled waste and what are your future plans? Our surface impoundment will be closed and impounding tanks will take its place.
- What are the chemical and physical characteristics of both the currently generated and the stockpiled wastes?
- What is your current treatment, recycle or disposal method and how will this change with the land ban? Not known at this point. Our current treatment is to incinerate these wastes. We have generated a significant amount of these wastes but it is suspected to increase in the future.
- What are the capacities of these treatment, recycle and disposal methods in relationship to F037 and F038 wastes? We feel incineration capacity is full.

CD2F 003

1052

NOTICE
If the filmed image is less clear than this Notice it is due to the quality of the document being filmed.

- Are there any planned changes, either physical or operational, to deal with the land ban and how will these changes affect K048-K052 waste generation? We will continue to attempt to segregate non hazardous wastes.
- Is it possible to reduce F037/F038 or K048-K052 wastes by putting more of a load on the aggressive biological units? NO.

General

- What are your offsite treatment options and are the unique features of your waste that would limit the treatability options?
- What modifications have been done or are planned upstream to reduce the amount of waste generated in the waste water treatment facility (eg. pretreatment, source control, segregation, etc.)? Segregation of stormwater and process sewer in open tank farm.
- Will the BIF rulings affect any of the current disposal options, onsite, captive or commercial?
- Is there a preference on producing F037/F038 wastes or K048-K052 wastes in terms of handling or disposal? At this point we are much better equipped to handle K wastes.
- What is the frequency of cleanout for the various waste water treatment units (eg. API, DAF, storage tank, surface impoundments, etc.)? As necessary.
  API - 3 yr. Sewer systems as required for maintenance.
  Surface Impoundment - 1 time. Storage tanks - as required for inspection or maintenance

While some of these questions are very specific, we realize that initially not all of the exact quantities, etc. will be available. The main purpose of the questions is to get an overall understanding, to get a feel for how much planning is taking place, how much data is available, and what are the unique problems that the refineries will encounter.

CD2F 003

1053

PHONE LOG FOR F037 AND F038 CAPACITY ANALYSIS

CONTACT:	Colin Franks (BP Oil, Marcus Hook, PA)
PHONE NUMBER:	(215) 499-7023
CALLER:	James Hsu
DATE:	9/12/91
SUBJECT:	F waste generation and status of impoundments

Mr. Franks indicated that their primary filter generates 200 tons of F038 wastes per year. This facility originally planned to dredge, close and replace their surface impoundment with tanks prior to the F waste land ban. However, they now indicate that this plan has been rescheduled until the spring of 1993.

NOTICE
If the filmed image is less clear than this Notice it is due to the quality of the document being filmed.

CD2F 003

1054

F037 AND F038 WASTE CAPACITY ANALYSIS:
DATA USE AND TRACKING SHEET

Refinery: Chevron - Philadelphia Refinery
State: Pennsylvania

Data sources available:

_x_ Petroleum refinery visits/voluntary submission

_x_ National Survey of Hazardous Waste Treatment, Storage, Disposal, and Recycling Facilities (TSDR survey)

__ National Survey of Hazardous Waste Generators

__ Biennial report/state reporting requirements

__ California hazardous waste data base

_x_ Petroleum refinery data base (PRDB)

__ No-migration petitions

Basis for F037 and F038 waste estimation:

EPA used data provided by Chevron (Philadelphia Refinery) because it was the most recent and the only source that describes F037 and F038 waste generation and management. Other sources were used only in comparison with the refinery's data submission.

F037 and F038 waste estimates:

F037 (routine) = 500 tons/year from sewer cleanouts.

Chevron Philadelphia expects the F037 wastes to be treated in an on-site incinerator.

Chevron Philadelphia does not anticipate generating either one-time F037 sludges (no impoundments) or any F038 wastes.

NOTICE
If the filmed image is less clear than this Notice it is due to the quality of the document being filmed.

CD2F 003

1055

Chevron

Chevron U.S.A. Inc.
P.O. Box 7408, Philadelphia, PA 19101

G. R. Moffitt
General Manager
Philadelphia Refinery

NOTICE
If the filmed image is less clear than this Notice it is due to the quality of the document being filmed.

June 21, 1991

ICF Incorporated
Four Gateway Center
15th Floor
Pittsburgh, PA. 15222
Attention: Mr. Kunal Banerjee

Dear Mr. Banerjee:

EPA Request For Voluntary Information
On Petroleum Refinery Wastes
EPA I.D. No. PAD049791098

In response to EPA's request for information on Petroleum Refinery Wastes, we are pleased to provide the following information.

Wastewater Treatment Facility

- What is your current configuration (schematic)?
  See Figure I.

- How segregated is your system, stormwater vs. process water?
  Non-segregated system.

- What modifications have been made in the last 5 years?
  Increased stormwater surge capacity, modified flow pattern through separators and surge tankage, enhanced slop oil recovery capability, eliminated 2 separators, and modified separators to allow removal of one half for cleaning.

- What were the driving forces behind these modifications?
  Reduce NPDES exceedences and increase reliability of WWTP operation.

- What future modifications are planned?
  Upgrade sewer system to NSPS as required by Benzene Waste Neshap, cover roughing filters and vent to a control device, and vent separators to a control device.

- What are the driving forces behind these modifications?
  Benzene Waste Neshap Regulations.

- How have the K048-K052, TC and F037/F038 rulings and land bans affected the facility in terms of modifications, operation, capacity, etc.?
  No modifications or changes in operating procedures are anticipated.

CD2F 003

1056

NOTICE
If the filmed image is less clear than this Notice it is due to the quality of the document being filmed.

CD2F 003

1 0 5 1

K048-K052 and TC Wastes

- What is your estimated rate of generation and land disposal of K048-K052 and TC wastes?
  Generated - 8,500 Tons/Year
  Land Disposed - 4,000 Tons/Year of which 2,500 Tons are Incinerator Ash from on-site Incineration.

- How do you currently treat, recycle, or dispose of these wastes and are there foreseeable changes in the treatment, recycling or disposal?
  a. K049 - Not generated, K050 - Treatment at the on-site Wastewater Treatment Plant, K051 - On-site Incineration, K052 and TC Wastes - Treatment and disposal off-site.
  b. A Class II permit modification has been submitted to EPA requesting approval for the treatment of K049-K052, F037 and TC Wastes through the on-site Sludge Incinerator. Modifications are planned to the Incinerator that will accommodate all pumpable materials. All unpumpable wastes (i.e., Catalysts, refractory, etc.) will still require off-site treatment and disposal.

- How have the waste generation rates changed with the hazardous waste ruling and land ban?
  No changes in waste generation rates but significant increase in proportion of waste classified as hazardous waste due to the TC regulation. A waste minimization program has been in place at the Refinery since 1987.

- Have there been any upstream or wastewater treatment facility operating changes to reduce the amount of these wastes generated and how effective are these changes?
  Source Control limits the quantity and types of materials discharged to the sewer system. Minimal effectiveness in reducing waste generation rates.

- Will the proposed F037 and F038 land ban affect the amount of these wastes produced?
  No.

- How much of these wastes are stockpiled in containers or surface impoundments?
  Zero stockpiled in containers. There are no surface impoundments at the refinery.

- What are the chemical and physical characteristics of the currently generated and stockpiled wastes (i.e., are they dewatered, do they have significant BTU value, etc.)?
  Physical characteristics: Sludge type materials, 10-15% solids, <u>not dewatered</u>.

  Chemical characteristics:

BTU/Lb.	<5,000
pH	$\geq$ 2.0 or $\leq$ 12.5
Flash Point	> 140°F
Non Reactive	

- How will these characteristics change with any planned facility modifications and operating changes?
  No changes are expected.

- What quantity of your secondary treatment waste, such as sludge from the aggressive biological units, is categorized as TC waste?
  Zero.

F037 and F038 Wastes

- Is there a current estimate of the amount of F037 and F038 wastes generated?
  F037 - 500 Tons/Year, F038 - Zero.

- Is there an estimate of the amount of F037 and F038 wastes stockpiled in containers or surface impoundments?
  Zero.

- What are you currently doing with the stockpiled waste and what are your future plans?
  Zero stockpiled.

- What are the chemical and physical characteristics of both the currently generated and the stockpiled wastes?
  See typical lab analysis attached.

- What is your current treatment, recycle or disposal method and how will this change with the land ban?
  Materials are currently shipped off-site for disposal in landfill. With EPA approval of our permit modification, materials will be treated through the on-site Incinerator.

- What are the capacities of these treatment, recycle and disposal methods in relationship to F037 and F038 wastes?
  A permit modification has been submitted to EPA requesting approval to treat 100% of the F037 wastes through our on-site Incinerator.

- Are there any planned changes, either physical or operational, to deal with the land ban and how will these changes affect K048-K052 waste generation?
  Modifications to the on-site Sludge Incinerator will allow for the on-site treatment of all K049-K052 wastes. The volume of these waste requiring off-site treatment/disposal will decrease.

- Is it possible to reduce F037/F038 or K048-K052 wastes by putting more of a load on the aggressive biological units?
  No.

NOTICE: If the filmed image is less clear than this Notice it is due to the quality of the document being filmed.

CD2F 003

1058

General

- What are your off-site treatment options and are the unique features of your waste that would limit the treatability options?
  - a. Off-site treatment options include Incineration and Solvent Extraction followed by Stabilization for metals. Treatment standards and Land Ban dates have not yet been established for TC wastes or F037/F038 wastes.
  - b. Certain waste streams (i.e., catalysts, refractory, etc.) are unpumpable.

- What modifications have been done or are planned upstream to reduce the amount of waste generated in the wastewater treatment facility (e.g., pretreatment, source control, segregation, etc.)?
  Source Control, sealed sewers in benzene areas (Benzene Waste NESHAP).

- Will the BIF rulings affect any of the current disposal options, on-site, captive or commercial?
  May limit our option of using certain waste oils as fuels at our Boilerhouse.

- Is there a preference on producing F037/F038 wastes or K048-K052 waste in terms of handling or disposal?
  No preference.

- What is the frequency of cleanout for the various wastewater treatment units (e.g., API, DAF, storage tank, surface impoundments, etc.
  API separators are cleaned at 2-year intervals and storage tanks at 10-year intervals.

If you have any questions or need additional information, please contact our Mr. Mike Manigly (Environmental Specialist - Waste) at (215) 339-7466.

Very truly yours,

Eric Schneider

E. V. Schneider
Supervisor - Environmental

MTM/ssr
attachment

NOTICE
If the filmed image is less clear than this Notice it is due to the quality of the document being filmed.

CD2F 003

1059

OHM Corporation

Environmental Testing
and Certification Corp.

Chevron - USA
P.O. Box 3408
Philadelphia, PA 19101

Attn: Jim Tucker

REF: ETC ANALYSIS REPORT

ETC is pleased to provide data from the samples of your recently submitted samples. The analytical results may be found on the attached summary report; the analytical methods employed and regulatory limit levels appear below.

PARAMETER	METHOD	TCLP REGULATORY ALERT LEVEL
TCLP EXTRACTION VOLATILES	8240	
Benzene		0.5 mg/l
Carbon tetrachloride		1.0 mg/l
Chlorobenzene		100 mg/l
Chloroform		6.0 mg/l
1,2-Dichloroethane		7.5 mg/l
1,1-Dichloroethylene		0.5 mg/l
Methyl ethyl ketone		0.7 mg/l
Tetrachloroethylene		0.7 mg/l
Trichloroethylene		0.5 mg/l
Vinyl chloride		0.2 mg/l
TCLP EXTRACTION SEMIVOLATILES	8270	
1,4-Dichlorobenzene		7.5 mg/l
2,4-Dinitrotoluene		0.13 mg/l
Hexachlorobenzene		0.13 mg/l
Hexachlorobutadiene		0.5 mg/l
Hexachloroethane		3.0 mg/l
Nitrobenzene		2.0 mg/l
Pentachlorophenol		100 mg/l
Pyridine		5.0 mg/l
2,4,5-Trichlorophenol		400 mg/l
2,4,6-Trichlorophenol		2.0 mg/l
m+p-Cresol		200 mg/l
o-Cresol		200 mg/l
TCLP EXTRACTION RCRA METALS	(PREP/ANALYSIS)	
Arsenic	3010/6010	5.0 mg/l
Barium	3010/6010	100 mg/l
Cadmium	3010/6010	1.0 mg/l
Chromium	3010/6010	5.0 mg/l
Lead	3010/6010	5.0 mg/l
Mercury	3010/7470	0.2 mg/l
Selenium	3010/6010	1.0 mg/l
Silver	3010/6010	5.0 mg/l
Reactivity	1020	
pH	9040	
Flash Point	1010	
BTU/lb	ASTM D240	
Sulfide as S	SM 427C	
Sulfur	SM 427C	
Cyanide, Total	9010	
Benzene (Same)	8240	
Paint Filter Test	9095	

NOTICE
If the filmed image is less clear than this Notice it is due to the quality of the document being filmed.

CD2F 003

1060

X

ETC
Environmental Testing
& Certification Corp.

LANDFILL DISPOSAL FOR SOLIDS AND SLUDGES

Client: CHEVRON U.S.A., INC.
Sample ID: SVR SLDG

Dated:
Sample Number: F80254

	RESULTS	REGULATORY LEVEL	METHOD
o-Cresol	ND mg/l	200	8270
TCLP EXTRACTION RCRA METALS			
(PREP ANALYSIS)			
Arsenic	BMDL mg/l	5.0	3010/6010
Barium	.42 mg/l	100	3010/6010
Cadmium	.0032 mg/l	1.0	3010/6010
Chromium	.76 mg/l	5.0	3010/6010
Lead	.39 mg/l	5.0	3010/6010
Mercury	.00032 mg/l	0.2	3010/6010
Selenium	BMDL mg/l	1.0	3010/6010
Silver	ND mg/l	5.0	3010/6010
CONVENTIONALS			
Total Cyanide	.39 mg/kg		9010
Total Sulfide	190 mg/kg		9030
Reactivity	NEGATIVE		
Petroleum Hydrocarbons (IR)	60300mg/kg		
Flashpoint	>60 Deg C		

NOTICE
If the filmed image is less clear than this Notice it is due to the quality of the document being filmed.

CD2F 003

1 0 6 1

NOTICE
If the filmed image is less clear than this Notice it is due to the quality of the document being filmed.

CD2F 003

1062

ETC
Environmental Testing
& Certification Corp.

LANDFILL DISPOSAL FOR SOLIDS AND SLUDGES

Client: CHEVRON U.S.A., INC.
Sample ID: SUR SLDG

Dated:
Sample Number: F80254

Physical Tests:

Color - Wht___Blk___Brn___Ylw___Grn___Blu___Prp___Red___Org___Clr___Gry___

Phasing - Single___ Multiple___ Phases 1(top)____,2____,3____(S,SL,L)
% Vol 1(top)____,2____,3____

	RESULTS	REGULATORY LEVEL	METHOD
Density (Bulk)	____g/cc		
Solids: Total	____% by Wt		

Characteristics Tests:

Reactivity

Reactive Cyanide	____mg/kg	LOD	
Reactive Sulfide	____mg/kg	10	

Corrosivity

pH Test	7.59pH units	N/A	

Ignitability

Flash Point (Closed Cup) ___<23°C ___24-37°C ___38-59°C ___60-93°C ___>93°C 23-93°C
___<73°F ___75-99°F ___100-138°F ___140-199°F ___>199°F 73-199°F

Flame test Pos___ Neg___

TCLP EXTRACTION VOLATILES

Benzene	.00539	mg/l	0.5	8240
Carbon tetrachloride	ND	mg/l	1.0	8240
Chlorobenzene	ND	mg/l	100	8240
Chloroform	ND	mg/l	6.0	8240
1,2-Dichloroethane	ND	mg/l	7.5	8240
1,1-Dichloroethylene	ND	mg/l	0.5	8240
Methyl ethyl ketone	ND	mg/l	0.7	8240
Tetrachloroethylene	ND	mg/l	0.7	8240
Trichloroethylene	ND	mg/l	0.5	8240
Vinyl chloride	ND	mg/l	0.2	8240

TCLP EXTRACTION SEMIVOLATILES

1,4-Dichlorobenzene	ND	mg/l	7.5	8270
2,4-Dinitrotoluene	ND	mg/l	0.13	8270
Hexachlorobenzene	ND	mg/l	0.13	8270
Hexachlorobutadiene	ND	mg/l	0.5	8270
Hexachloroethane	ND	mg/l	3.0	8270
Nitrobenzene	ND	mg/l	2.0	8270
Pentachlorophenol	ND	mg/l	100	8270
Pyridine	ND	mg/l	5.0	8270
2,4,5-Trichlorophenol	ND	mg/l	400	8270
2,4,6-Trichlorophenol	ND	mg/l	2.0	8270
m+p-Cresols	ND	mg/l	200	8270

X

Chevron Philadelphia PAD049791098

FIGURE I

NO. 1 WASTEWATER TREATMENT PLANT

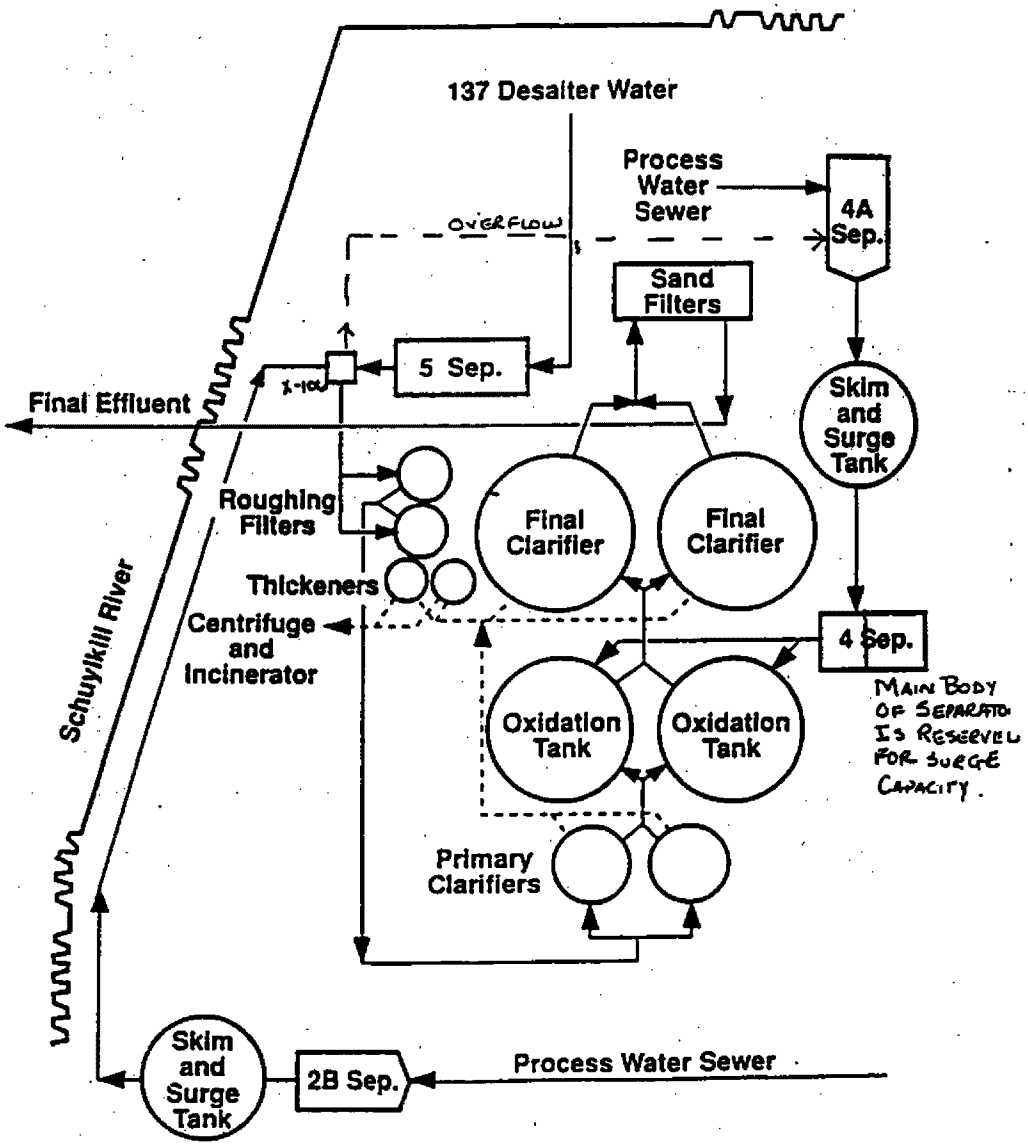

CONFIDENTIAL

Oct. 5, 1990
Revision 1

NOTICE
If the filmed image is less clear than this Notice it is due to the quality of the document being filmed.

CD2F 003

1063

F037 AND F038 WASTE CAPACITY ANALYSIS:
DATA USE AND TRACKING SHEET

Refinery: Chevron - Port Arthur Refinery
State: Texas

Data sources available:

_x_ Petroleum refinery visits/voluntary submission

_x_ National Survey of Hazardous Waste Treatment, Storage, Disposal, and Recycling Facilities (TSDR survey)

__ National Survey of Hazardous Waste Generators

__ Biennial report/state reporting requirements

__ California hazardous waste data base

_x_ Petroleum refinery data base (PRDB)

__ No-migration petitions

Basis for F037 and F038 waste estimation:

EPA used data provided by Chevron (Port Arthur Refinery) because it was the most recent and the only source that describes F037 and F038 waste generation and management. Other sources were used only in comparison with the refinery's data submission.

F037 and F038 waste estimates:

Routine F037 waste generation is from sewer cleanouts. Chevron did not know the estimated sewer cleanout quantity; therefore, based on sewer cleanout calculations, EPA estimated the sludge generation to be 2,500 tons/year. These calculations, which are the same as those used for several Category 2 refineries (see Appendix B), are as follows:

(121,000 tons/year total K waste generation[1])/(21,000,000 gallons/day wastewater flow) = 0.00576 solids loading of refinery

(0.00576) x (3,000 acres facility surface area) x (143.7 tons/(yr/acre) (for solids loading of 1.0 calculated from known refinery) = 2,500 tons/yr.

Other than the F037 waste from sewer cleanouts, Chevron Port Arthur does not appear to generate any other F037 and F038 wastes.

---

[1] Based on information provided in the TSDR Survey submitted by Chevron, Port Arthur.

NOTICE
If the filmed image is less clear than this Notice it is due to the quality of the document being filmed.

CD2F 003

1064

F037/8 (surface impoundments) - 0 tons (7/92 - 12/92)

F037/8 (surface impoundments) - 5,364 tons (1/93 - 12/93)

F037/8 (surface impoundments) - 0 tons (1/94 - 12/94)

NOTICE
If the filmed image is less clear than this Notice it is due to the quality of the document being filmed.

CD2F 003

1065

Chevron U.S.A. Inc.
P.O. Box 701, Port Arthur, TX 77641

Port Arthur Refinery

July 11, 1991

NOTICE
If the filmed image is less clear than this Notice it is due to the quality of the document being filmed.

QUESTIONNAIRE ON F037 AND F038 WASTES

Mr. James Hsu
ICF Incorporated
9300 Lee Highway
Fairfax, Virginia 22031-1207

Dear Mr. Hsu:

In response to Ms. Jo-Ann Bassi's (U.S.EPA) request dated June 12, 1991, we submit to you the following answers to the questionnaire regarding our refinery F wastes:

1.0 Wastewater Treatment Facility

1.1 What is your current configuration (schematic)? See the attached flow diagram entitled "Wastewater Treating."

1.2 How segregated is your system, stormwater vs. process water? Partially segregated. Approximately 4.5 MGD treated wastewater and 16.5 MGD stormwater. Proposed plans are to totally segregate wastewater and stormwater in three years.

1.3 What modifications have been made in the last five years?

A. Constructed a new 5,000 GPM clarifier. ($1.7MM)

B. Installed baffles in the oxidation ponds to reduce channelling.

C. Added an aeration system to surface drainage and new outfall. ($2.0 MM)

D. Constructed an aeration and biological treatment system to the wastewater drainage system. (Wastewater is a mix of process wastewater and surface drainage). ($2.0MM)

E. Changed cooling water treatment from a chromate to a phosphate treating system.

F. Put in operation an ammonia stripping system to remove the ammonia from the wastewater system. ($2.1MM)

G. Installed a water draw collection system for all tanks.

CD2F 003

1066

NOTICE
If the filmed image is less clear than this Notice it is due to the quality of the document being filmed.

CD2F 003

1067

H. Implemented a "Source Control" program which includes a department of employees who review problem areas in the refinery and seek out solutions.

I. Installed a CO_2 injection system in front of the Bio Treatment Unit to control pH at the No. 2 Storm Surge Basin.

J. Constructed curbs, slabs, drainage systems, etc., in response to the F wastes Primary Sludge Regulation. ($5.0MM)

1.4 What were the driving forces behind these modifications? NESHAP Regulations, TCLP Regulations and Primary Sludge Listing Regulations.

1.5 What future modifications are planned?

A. Segregate the stormwater and wastewater system.

B. Construct a new activated sludge unit.

1.6 What are the driving forces behind these modifications? NESHAP, TCLP and Primary Sludge Regulations.

1.7 How have K, TC and F Rulings and Land Bans affected the facility in terms of modifications, operations, capacity, etc.?

A. Implemented control of all wastewaters.

B. Increased manpower to comply with the regulations and added a "Source Control" department.

C. Proceeded with a three-year project to segregate wastewater and stormwater.

D. Increased capacity of the wastewater treatment facility to handle the additional volumes.

E. Operational costs have and will have a significant increase.

F. Requirement to obtain a RCRA permit.

2.0 <u>K048 - K052 and TC Wastes</u>

2.1 What is your estimated rate of generation and land disposal of K048 - K052 and TC wastes? In 1990, K wastes were 7,700 cubic yards.

2.2 How do you currently treat, recycle, or dispose of these wastes and are their any foreseeable changes in the treatment, recycling or disposal? Some K wastes are dewatered and incinerated and the remaining are processed through the MOSC system. Plans are being proposed for a thermal treatment unit. Presently a contractor is mechanically sepa-

NOTICE
If the filmed image is less clear than this Notice it is due to the quality of the document being filmed.

rating the water, recovering the oil, and incinerating the remaining solids of some of our K wastes.

2.3 How have the waste generation rates changed with the hazardous waste ruling and land ban? The wastewater and process water have become hazardous wastes streams requiring control to comply with the new regulations. The amount of wastes generated is the same although the amount of hazardous waste has increased due to the TC and Primary Sludge Regulations.

2.4 Have there been any upstream or wastewater treatment facility operating changes to reduce the amount of these wastes generated and how effective are these changes? The amount of total wastes generated remains approximately the same. See 1.3 above. An increase in hazardous wastes have occurred due to new regulations. A "Source Control" department and Primary Sludge Project have been implemented.

2.5 Will the proposed F037 and F038 land ban affect the amount of these wastes produced? No.

2.6 How much of these wastes are stockpiled in containers or surface impoundments? Presently the F wastes are not stockpiled.

2.7 What are the chemical and physical characteristics of the currently generated and stockpiled wastes (i.e. are they dewatered, do they have significant BTU value, etc.)? Currently generated wastes are dewatered and sent to landfill or incinerated. The BTU value is very low.

2.8 How will these characteristics change with any planned facility modifications and operating changes? No change is expected.

2.9 What quantity of your secondary treatment waste, such as sludge from the aggressive biological units is categorized as TC waste? None.

3.0 F037 and F038 Wastes

3.1 Is there a current estimate of the amount of F037 and F038 wastes generated? In 1990, 48,000 tons of Middle Layer Emulsion which resulted in 3,700 tons of coke after dewatering, 71 tons of API Separator Sludge after dewatering, 160 tons of Exchanger Cleaning Sludge after dewatering.

3.2 Is there an estimate of the amount of F037 and F038 wastes stockpiled in containers or surface impoundments? No F wastes are stockpiled.

3.3 What are you doing with the stockpiled waste and what are your future plans? N.A.

CD2F 003

1068

NOTICE
If the filmed image is less clear than this Notice it is due to the quality of the document being filmed.

CD2F 003

1069

3.4 What are the chemical and physical characteristics of both the currently generated and the stockpiled wastes? N.A.

3.5 What is your current treatment, recycle or disposal method and how will this change with the land ban?

Methods used are:

A. Centrifuge and incinerate (F and K wastes)

B. Recycle through MOSC system (K wastes)

A change due to the land ban is not expected.

A thermal treating unit is proposed for the future.

3.6 What are the capacities of these treatment, recycle and disposal methods in relationship to F037 and F038 wastes? MOSC is 100 bbls/day (K Wastes) Centrifuge is 10,000 bbls/day (F and K Wastes)

3.7 Are there any planned changes either physical or operational to deal with the land ban and how will these changes affect K048 - K052 waste generation? No definite plans other than possibly a thermal treating unit on site.

3.8 Is it possible to reduce F037-F038 or K048-K052 wastes by putting more of a load on the aggressive biological units? No. Presently, the units are close to capacity and additional volumes might constitute "scouring."

4.0 General

4.1 What are your offsite treatment options and are the unique features of your waste that would limit the treatability options?

A. Fuel blending

B. Centrifuge and incinerate

4.2 What modifications have been done or are planned upstream to reduce the amount of waste generated in the wastewater treatment facility (e.g. pretreatment, source control, segregation, etc.)?

A. Segregation of wastewaters within the next three years.

B. Completed modifications are:

1. Recirculating sampling systems.
2. A Source Control department
3. Installed sour water ammonia stripper.

4. Reduce water usage when possible.
5. Tank water draw collection system for all tanks.

4.3 Will the BIF rulings affect any of the current disposal options onsite, captive or commercial? No.

4.3 Will the BIF rulings affect any of the current disposal options onsite, captive or commercial? No.

4.3 Is there a preference on producing F037-F038 or K048-K052 wastes in terms of handling or disposal? The F wastes can now be landfilled and the K wastes can not.

4.5 What is the frequency of cleanout for the various wastewater treatment units (e.g. API, DAF, storage tank, surface impoundments, etc.)?

API is approximately every 2 to 3 years.
DAF is about daily.
Dirty water sumps about daily.
Tanks 1912 and 1913 - approximately every 2 to 3 years.

If you have any questions regarding this response, please contact E. M. Rader at (409) 985-1681.

Yours very truly,

For MLT

M. L. Textor
Supervisor, Utilities
and Environmental Section

EMR:lj

Attachment

NOTICE
If the filmed image is less clear than this Notice it is due to the quality of the document being filmed.

CD2F 003

10710

SIMPLIFIED FLOW DIAGRAM – WASTE WATER TREATING

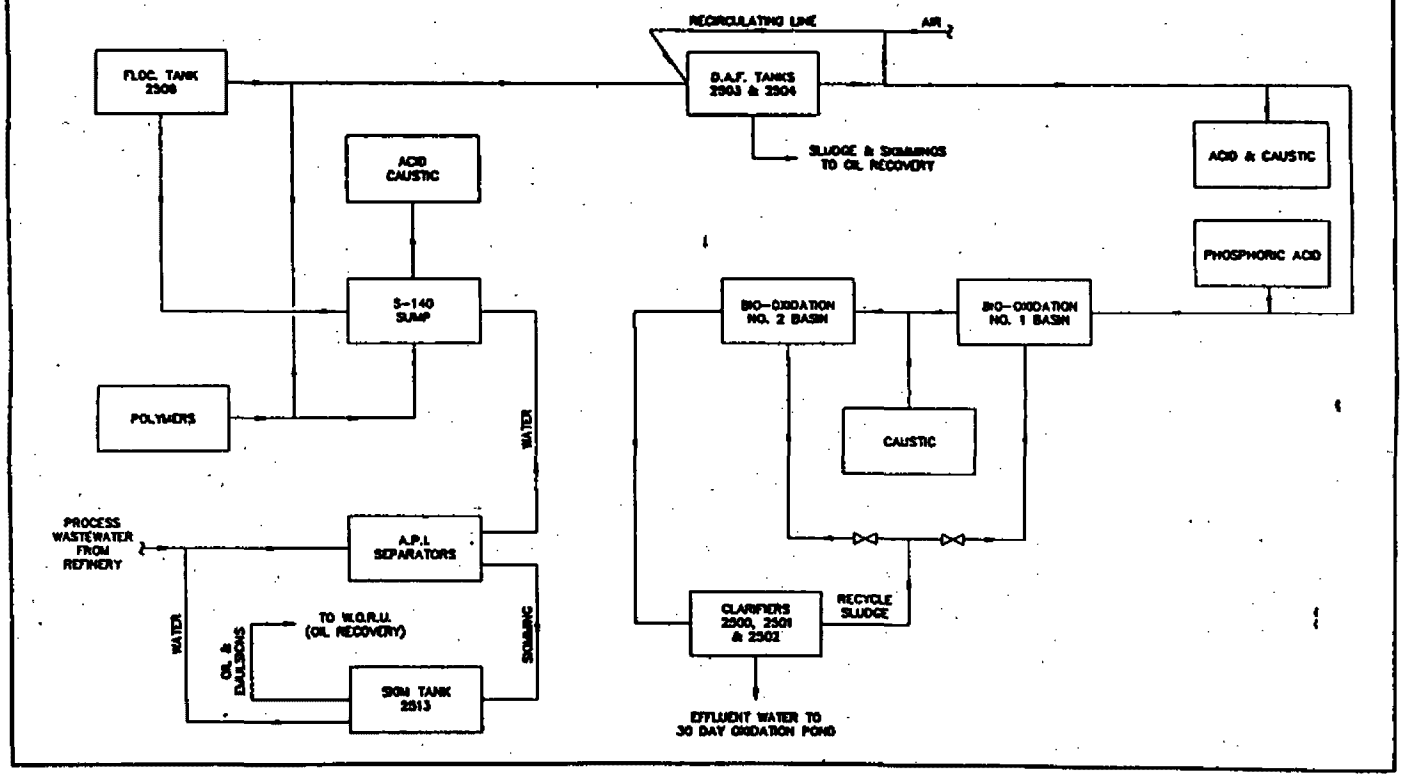

NOTICE
If the filmed image is less clear than this Notice it is due to the quality of the document being filmed.

CD2F 003

107-1

F037 AND F038 WASTE CAPACITY ANALYSIS:
DATA USE AND TRACKING SHEET

Refinery: El Paso Refinery
State: Texas

Data sources available:

_x_ Petroleum refinery visits/voluntary submission

_x_ National Survey of Hazardous Waste Treatment, Storage, Disposal, and Recycling Facilities (TSDR survey)

__ National Survey of Hazardous Waste Generators

_x_ Biennial report/state reporting requirements

__ California hazardous waste data base

_x_ Petroleum refinery data base (PRDB)

__ No-migration petitions

Basis for F037 and F038 waste estimation:

EPA used data provided by the El Paso Refinery because it was the most recent and the only source that describes F037 and F038 waste generation and management. Other sources were used only in comparison with the refinery's data submission.

F037 and F038 waste estimates:

F037/8 (routine) = 65 tons/year from cleanout of sewers and tanks.

The El Paso Refinery reports no other F waste than that identified above.

NOTICE
If the filmed image is less clear than this Notice it is due to the quality of the document being filmed.

CD2F 003

1012

F037 AND F038

QUESTIONS - ANSWERS

WASTE WATER TREATMENT FACILITY

Q: WHAT IS YOUR CURRENT CONFIGURATION?

A: STORMWATER AND PROCESS WASTEWATER FLOW TO AN API SEPARATOR FOR OIL REMOVAL, THEN ARE COMBINED WITH COOLING WATER BLOWDOWN AND DISCHARGED TO A POTW.

Q: HOW SEGREGATED IS YOUR SYSTEM, STORMWATER VS. PROCESS?

A: OUR SYSTEM IS NOT SEGREGATED AT ALL.

Q: WHAT MODIFICATIONS HAVE BEEN MADE IN THE LAST 5 YEARS?

A: ALL OPEN PONDS HAVE BEEN REMOVED. TWO SURGE TANKS, A NEUTRALIZATION SYSTEM, AND A COKER BLOWDOWN RECIRCULATION SYSTEM HAVE BEEN INSTALLED. A POLYMER IS ADDED TO WASTEWATER TO ENHANCE OIL REMOVAL.

Q: WHAT WERE THE DRIVING FORCES BEHIND THESE MODIFICATION:

A: AIR EMISSIONS AND POTENTIAL LEAKAGE CONCERNS, IMPACT OF THE NEW F WASTE LISTING LED TO REMOVAL OF OPEN PONDS. OTHER MODIFICATIONS WERE REQUIRED TO CONTINUE TO MEET POTW LIMITS AFTER SURGE PONDS WERE REMOVED.

Q: WHAT FUTURE MODIFICATIONS ARE PLANNED?

A: ADDITIONAL INSTRUMENTATION AND MONITORING OF WASTEWATER STREAMS, POSSIBLE API SEPARATOR MODIFICATIONS.

Q: WHAT ARE THE DRIVING FORCES BEHIND THESE MODIFICATIONS

A: NECESSARY TO MEET POTW LIMITS AFTER SURGE PONDS REMOVAL. FUTURE POTW LIMITS BECOMING MORE STRINGENT.

NOTICE
If the filmed image is less clear than this Notice it is due to the quality of the document being filmed.

CD2F 003

1013

Q: HOW HAVE K, TC, AND F RULINGS + LAND BANS AFFECTED FACILIT

A: K + TC RULINGS AND LAND BANS HAVE INCREASED COST OF CLEANING WASTEWATER FACILITIES, REQUIRING DEWATERING AND STABILIZATION OF SLUDGES. F RULINGS HAVE LED TO DECREASED FLEXIBILITY AND INCREASED FREQUENCY OF UPSETS DUE TO LOSS OF SURGE CAPACITY.

K048 - K052 AND TC WASTES

Q: WHAT IS ESTIMATED RATE OF GENERATION AND LAND DISPOSAL OF K048 - K052 AND TC WASTES?

A: 250 - 300 TONS PER YEAR

Q: HOW DO YOU CURRENTLY TREAT/RECYCLE/DISPOSE OF THESE WASTES AND ARE THERE ANY FORESEEABLE CHANGES?

A: WASTES ARE DEWATERED AS MUCH AS PRACTICABLE, STABILIZE AND LANDFILLED. SOME HIGH BTU WASTES ARE FUELS BLENDI FUELS BLENDING WILL PROBABLY BE DISCONTINUED DUE TO NEW REGS.

Q: HOW HAVE WASTE GENERATION RATES CHANGED WITH THE HAZARDOUS WASTE RULING AND LAND BAN?

A: VOLUMES HAVE BEEN REDUCED BY DEWATERING. FREQUENCY OF CLEANING API SEPARATOR HAS BEEN REDUCED DUE TO COST OF DEWATERING AND DISPOSAL.

Q: HAVE THERE BEEN ANY UPSTREAM OR WASTE WATER TREATMENT FACILITY OPERATING CHANGES TO REDUCE THE AMOUNT OF THESE WASTES GENERATED?

NOTICE
If the filmed image is less clear than this Notice it is due to the quality of the document being filmed.

CD2F 003

1074

NOTICE
If the filmed image is less clear than this Notice it is due to the quality of the document being filmed.

CD2F 003

1015

Q: WILL THE PROPOSED F037 AND F038 LAND BAN AFFECT THE AMOUNT OF THESE WASTES PRODUCED?

A: NO.

Q: HOW MUCH OF THESE WASTES ARE STOCKPILED?

A: NONE.

Q: WHAT ARE THE CHEMICAL AND PHYSICAL CHARACTERISTICS OF CURRENTLY GENERATED WASTES?

A: K-WASTES ARE DEWATERED, GENERALLY HAVE LOW BTU VALUE AFTER DEWATERING. TC WASTES GENERALLY REQUIRE STABILIZATION, 20-40% ALSO REQUIRE NEUTRALIZATION. TC WASTES USUALLY DO NOT HAVE SIGNIFICANT BTU VALUE.

Q: HOW WILL THESE CHARACTERISTICS CHANGE WITH ANY PLANNED FACILITY MODIFICATIONS AND OPERATING CHANGES

A: NO CHANGE IN CHARACTERISTICS IS ANTICIPATED.

Q: WHAT QUANTITY OF SECONDARY TREATMENT WASTE IS CATEGORIZED AS TC WASTE?

A: WE DO NOT HAVE SECONDARY TREATMENT.

F037 AND F038 WASTES

Q: IS THERE A CURRENT ESTIMATE OF AMOUNT GENERATED

A: 45-65 TONS PER YEAR

Q: IS THERE AN ESTIMATE OF THE AMOUNT STOCKPILED?

A: NONE IS STOCKPILED.

Q: WHAT ARE YOU DOING WITH STOCKPILED WASTE, NOW + FUTURE

Q: WHAT ARE THE CHEMICAL AND PHYSICAL CHARACTERISTICS OF CURRENTLY GENERATED WASTES?

A: LOW BTU VALUE, REQUIRE DEWATERING, MAY BE TC FOR BENZENE.

Q: WHAT IS YOUR CURRENT TREATMENT, RECYCLE OR DISPOSAL METHOD AND HOW WILL THIS CHANGE WITH LAND BAN?

A: WE DEWATER, STABILIZE, AND LANDFILL TO MEET LANDBAN CRITERIA.

Q: WHAT ARE THE CAPACITIES OF THESE TREATMENT, RECYCLE AND DISPOSAL METHODS FOR F037/F038 WASTES

A: ADEQUATE

Q: ARE THERE ANY PLANNED CHANGES TO DEAL WITH LAND BAN AND HOW WILL CHANGES AFFECT K WASTE GENERATI

A: NO PLANNED CHANGES, NO IMPACT ON K WASTE ANTICIPATED

Q: IS IT POSSIBLE TO REDUCE F OR K WASTES BY PUTTING MORE LOAD ON AGGRESSIVE BIOLOGICAL UNITS?

A: WE DON'T HAVE AGGRESSIVE BIOLOGICAL TREATMENT.

GENERAL

Q: WHAT ARE OFFSITE TREATMENT OPTIONS AND UNIQUE FEATURES OF WASTE THAT LIMIT TREATABILITY OPTIONS?

A: FUELS BLENDING, LIMITED BY NEW REGULATIONS, LOW BTU VALUE, TRANSPORTATION COSTS, SLUDGE STRATIFICATION DURING TRANSPORT. STABILIZATION/LANDFILLING, LIMITED BY pH, HEAVY METALS CONTENT IN SOME WASTES. INCINERA

NOTICE
If the filmed image is less clear than this Notice it is due to the quality of the document being filmed.

CD2F 003

1076

Q: WHAT MODIFICATIONS HAVE BEEN DONE OR ARE PLANNED UPSTREAM TO REDUCE THE AMOUNT OF WASTE GENERATED IN THE WASTEWATER TREATMENT FACILITY?

A: SURGE PONDS HAVE BEEN REMOVED, A NEUTRALIZATION SYSTEM AND PARTIAL RECYCLE SYSTEM HAVE BEEN COMPLETED. EXTENSIVE SOURCE IDENTIFICATION AND SOURCE CONTROL IS PLANNED.

Q: WILL THE BIF RULINGS AFFECT CURRENT DISPOSAL OPTIONS

A: YES, LIMITS COMMERCIAL DISPOSAL BY FUELS BLENDING.

Q: IS THERE A PREFERENCE ON PRODUCING F WASTES OR K WASTES IN TERMS OF HANDLING OR DISPOSAL?

A: NO.

Q: WHAT IS THE FREQUENCY OF CLEANOUT FOR VARIOUS WASTEWATER TREATMENT UNITS?

A: API SEPARATOR ONCE OR TWICE ANNUALLY AS NEEDED. TANKS AND PIPING WHEN NEEDED, ANTICIPATE NO MORE THAN ONCE YEARLY.

For questions call Linda Abernathy, 915-772-1433. El Paso Refining L.P.

NOTICE
If the filmed image is less clear than this Notice it is due to the quality of the document being filmed.

CD2F 003

1077

NOTICE
If the filmed image is less clear than this Notice it is due to the quality of the document being filmed.

CD2F 003

1 0 7 1 8

F037 AND F038 WASTE CAPACITY ANALYSIS:
DATA USE AND TRACKING SHEET

Refinery: Exxon - Baytown Refinery
State: Texas

Data sources available:

_x_ Petroleum refinery visits/voluntary submission

_x_ National Survey of Hazardous Waste Treatment, Storage, Disposal, and Recycling Facilities (TSDR survey)

__ National Survey of Hazardous Waste Generators

_x_ Biennial report/state reporting requirements

__ California hazardous waste data base

_x_ Petroleum refinery data base (PRDB)

_x_ No-migration petitions

__ Comments from proposed rule

_x_ Organic TC Survey

Basis for F037 and F038 waste estimation:

EPA used data provided by Exxon (Baytown Refinery) because it was the most recent and the only source that describes F037 and F038 waste generation and management. Other sources were used only in comparison with the refinery's data submission.

F037 and F038 waste estimates:

F037 (routine) = 10,000 tons/year from surface impoundments and separators; another 2,000 tons/year from sewer cleanouts.

F037 (one-time) = 50,000 tons/year stockpiled in stormwater impoundments; 45,000 tons/year stockpiled in refinery sewers.

According to more recent information from the TC survey, this facility indicated that it would generate the following quantities of surface impoundment sludges during the indicated time periods:

F037/8 (surface impoundments) = 95,563 tons (7/92 - 12/92)

F037/8 (surface impoundments) = 95,000 tons (1/93 - 12/93)

F037/8 (surface impoundments) = 0 tons (1/94 - 12/94)

F037 (routine) = 2,000 tons/yr.

NOTICE
If the filmed image is less clear than this Notice it is due to the quality of the document being filmed.

CD2F 003

10 7 9

NOTICE
If the filmed image is less clear than this Notice it is due to the quality of the document being filmed.

CD2F 003

1080

F037 AND F038 WASTE CAPACITY ANALYSIS:
DATA USE AND TRACKING SHEET

Refinery: BP Oil - Ferndale Refinery
State: Washington

Data sources available:

_x_ Petroleum refinery visits/voluntary submission

_x_ National Survey of Hazardous Waste Treatment, Storage, Disposal, and Recycling Facilities (TSDR survey)

__ National Survey of Hazardous Waste Generators

__ Biennial report/state reporting requirements

__ California hazardous waste data base

_x_ Petroleum refinery data base (PRDB)

_x_ No-migration petitions

__ Comments from proposed rule

_x_ Organic TC Survey

Basis for F037 and F038 waste estimation:

EPA used data provided by BP Oil (Ferndale Refinery) because it was the most recent and the only source that describes F037 and F038 waste generation and management. Other sources were used only in comparison with the refinery's data submission.

F037 and F038 waste estimates:

F037 (one-time) = 6,000 tons from clean out (5,500 tons from surge basins and 500 from impoundment). The surge basins will be replaced by tanks, which will be cleaned out every two to five years; therefore, the F037 sludge would not be generated continuously.

BP Oil Ferndale does not anticipate generating F038 wastes.

According to more recent information from the TC survey, this facility indicated that it would generate the following quantities of surface impoundment sludges during the indicated time periods:

F037/8 (surface impoundments) = 1,040 tons (7/92 - 12/92)

F037/8 (surface impoundments) = 0 tons (1/93 - 12/93)

F037/8 (surface impoundments) = 0 tons (1/94 - 12/94)

NOTICE
If the filmed image is less clear than this Notice it is due to the quality of the document being filmed.

CD2F 003

1 0 8 1

PHONE LOG FOR F037 AND F038 CAPACITY ANALYSIS

CONTACT: Dick Bremer (BP Oil, Ferndale, WA)

PHONE NUMBER: (206) 384-8243

CALLER: James Hsu

DATE: 9/12/91

SUBJECT: Status of surface impoundments

Impoundments at the refinery are to be cleaned out and replaced with tanks in the next few years. However, it is not feasible to clean out the impoundments before 1992 because the refinery is not ready to stop refining operations to accommodate clean out of the impoundments.

NOTICE
If the filmed image is less clear than this Notice it is due to the quality of the document being filmed.

CD2F 003

11082

F037/F038 WASTE CAPACITY ANALYSIS -- REFINERY INTERVIEW

STATE: Washington

COMPANY: BP Oil

ADDRESS: BP Oil
Ferndale Refinery
P.O. Box 8
Ferndale, WA 98248

CONTACT: Dick Bremer PHONE NUMBER: 1-206-384-8243
POSITION: Environmental Coordinator FAX NUMBER: 1-206-384-8344

REFERENCE: Kim Anderson, Wash. State Dept. of Ecology, Industrial Section

DATE: 6? 9/20/91 TIME: 9-10 am PST

CALLER: Susanne Jones EXTENSION: 509-946-2117

Notes:

- CBI claims? None

- Need to fax info to contact person? Yes, sent question packet

- Items contact will send: block diagram of WWTP

NOTICE
If the filmed image is less clear than this Notice it is due to the quality of the document being filmed.

CD2F 003

1083

NOTICE
If the filmed image is less clear than this Notice it is due to the quality of the document being filmed.

BP Oil, Ferndale, WA

F037 AND F038 QUESTIONS

We have developed a preliminary series of questions to aid in our understanding of how the new F037 and F038 waste listing and proposed land ban will affect refineries. These questions involve not only F037 and F038 wastes, but expand to K048-K052 and TC wastes, discuss past and future waste water treatment facility modifications, on site treatment, etc., in order for us to get an understanding of the whole picture and how everything interrelates. In addition to gaining an overall understanding of the issues, we want to discover any unique problems or treatability issues that refineries may have associated with these wastes.

1.0 Waste Water Treatment Facility

1.1 What is your current configuration?

See attached.

1.2 How segregated is your system, storm water vs. process water?

There are three sewer systems: a storm sewer and two process sewers - the oily water sewer and the phenolic sewer.

1.3 What modifications have been made in the last 5 years?

No major changes.

1.4 What were the driving forces behind these modifications?

Not applicable.

1.5 What future modifications are planned?

Over the next few years the following will occur:
- The three surge basins will be replaced with three storage tanks.
- The open API unit will either be covered or replaced with a covered unit.
- The DAF units will be replaced with Induced Air Flotation units.
- The bio-treaters will probably be covered and the effluent air will be sent to an activated carbon (GAC) unit or to a vapor incinerator.
- Seals will be installed on sewer manhole covers.

1.6 What are the driving forces behind these modifications?

The NESHAP benzene rule and by the TC rule.

CD2F 003

1004

NOTICE
If the filmed image is less clear than this Notice it is due to the quality of the document being filmed.

BP Oil, Ferndale, WA

1.7 How have the K048-K052, TC and F037-F038 rulings and land bans affected the facility in terms of modifications, operation, capacity, etc.?

TC (and NESHAP) caused the facility changes. The K and F rulings just changed how the material is handled.

2.0 K048-K052 and TC Wastes

2.1 What is your estimated rate of generation and land disposal of K048-K052 and TC wastes?

(Quantities in Tons)	1988	1989	1990
K048/K049 (DAF float & Slop oil emulsion)	229.0	935.0	1300*
K050 (HXX sludge)	0.	0	0
K051 (API sludge)	70.0	220.0	44*
K052 (Pb tk btms)	0	0	0

* 350 lb/bbl or 5.7 bbl/ton

2.2 How do you currently treat, recycle or dispose of these wastes and are there any foreseeable changes in the treatment, recycling or disposal?

By landfarming it. The loading is restricted to stay within their RCRA Part B permit. Last year, Chem Waste Management came on site and pressed the sludge so that the 10000 bbl of total K waste generated in 1990 was reduced to 736 bbl. This pressed cake was landfarmed.

2.3 How have the waste generation rates changed with the hazardous waste ruling and land ban?

The pressed cake has a much smaller volume, and much less oil. The stream of new regulations can complicate matters. For example, in 1989, a field study was performed for the Washington State Dept. of Ecology as part of a no-migration petition. At that time the sludge was not pressed. Since that time, benzene NESHAP requires wastes to have less than 10 ppm benzene. This can be done by pressing, then hot water washing the cake. In the meantime, the people at Ecology handling the no-migration petition have to decide if a new field study is required.

CD2F 003

1085

NOTICE
If the filmed image is less clear than this Notice it is due to the quality of the document being filmed.

BP Oil, Ferndale, WA

2.4 Have there been any upstream or waste water treatment facility operating changes to reduce the amount of these wastes generated and how effective are these changes?

Yes, there has been some emulsion breaking upstream of the WWTF. Three 100K bbl tanks take accumulated K048 and K049 sludge pulled off the units. This is iteratively dewatered and allowed to separate. The oil phase is recycled to the cat cracker and the water phase is routed back to the API unit.

They also considered oil water separators at the boundary of each process unit, but this option was prohibitively expensive, as well as rendering the downstream treatment oversized.

Downstream of the WWTF, pressing the sludge reduces the volume: the 50% oil emulsion is reduced to a 12% oil cake.

2.5 Will the proposed F037 and F038 land ban affect the amount of these wastes produced?

As the definition of what is hazardous expands, so does the amount of sludge.

2.6 How much of these wastes are stockpiled in containers or surface impoundments?

None.

2.7 What are the chemical and physical characteristics of the currently generated and stockpiled wastes (ie are they dewatered, do they have significant btu value, etc?)

The dewatered cake is 12% oil, and has insufficient BTU value to qualify as a hazardous waste fuel (limit is 3500 BTU/lb). Drying the cake would increase the BTU content somewhat.

2.8 How will these characteristics change with any planned facility modifications and operating changes?

If the filter media (diatomaceous earth) is replaced with coke fines, the heating value will increase tremendously. Also, oil that is extracted from a particular waste, can be added back in to increase its heating value.

2.9 What quantity of your secondary treatment waste, such as sludge from the aggressive biological units, is categorized as TC waste?

None, it has tested out repeatedly as non-hazardous. The water to the bio units has 25 ppm total oil. It then goes to a trickling filter, is air stripped, and then metabolized by the bugs.

CD2F 003

1085

BP Oil, Ferndale, WA

3.0 F037/F038 Wastes

3.1 Is there a current estimate of the amount of F037 and F038 wastes generated?

The bulk of the F waste will come from the surge basin bottoms. The combined K and F waste should be about five times that of the currently generated K wastes.

3.2 Is there an estimate of the amount of F037 and F038 wastes stockpiled in containers or surface impoundments?

About 500 tons.

3.3 What are you currently doing with the stockpiled waste and what are your future plans?

It will be land farmed until this is no longer allowed. After that it will have to be shipped offsite to an incinerator. It could also be used in the hazardous fuel program. This is much cheaper than incineration, but requires a high BTU value.

3.4 What are the chemical and physical characteristics of both the currently generated and the stockpile wastes?

It has no significant BTU value without pressing and drying. It is mostly dirt, clay, sand, pebbles and rust with very little oil.

3.5 What is your current treatment, recycle or disposal method in relationship to F037 and F038 wastes?

Land farming. Once the land ban comes into affect and if the no migration petition is not granted, these wastes will have to be incinerated.

3.6 What are the capacities of these treatment, recycle or disposal methods in relationship to F037 and F038 wastes?

?

3.7 Are there any planned changes, either physical or operational, to deal with the land ban and how will these changes affect K048-K052 waste generation?

K048 (DAF float) will be reduced when the DAF units are replaced by Induced Air Flotation Units.

NOTICE
If the filmed image is less clear than this Notice it is due to the quality of the document being filmed.

CD2F 003

1087

BP Oil, Ferndale, WA

3.8 Is it possible to reduce F037/F038 or K048-K052 wastes by putting more of a load on the aggressive biological units?

No. All sludges are produced upstream of the bio units. The impellers and pumps take a beating and the efficiency of the bio units drop off if the upstream units don't remove enough of the solids.

4.0 General

4.1 What are your offsite treatment options and are the unique features of your waste that would limit the treatability options?

Incineration or cement kiln.

4.2 What modifications have been done or are planned upstream to reduce the amount of waste generated in the waste water treatment facility (eg. pretreatment, source control, segregation, etc?)

None. It was too expensive.

4.3 Will the BIF ruling affect any of the current disposal options, onsite, captive or commercial?

No.

4.4 Is there a preference on producing F037/F038 wastes in terms of handling or disposal?

F wastes are preferable until the land ban comes into effect. Otherwise, no. It is hard to understand why land treatment was so poorly treated; why was it lumped together with landfilling? Does trucking dirt clear across the country to burn it really make sense overall?

4.5 What is the frequency of clean out for the various waste water treatment units (eg. API, DAF, storage tank, surface impoundments, etc.)

Most of them are cleaned out annually. The API and DAF units may go two years this time. The surge basins are very large, and so are cleaned about every 15 years. However, these will be replaced with tankage. Since the capacity will decrease, cleanout may need to occur every 1 to 2 years.

While some of these questions are very specific, we realize that initially not all of the exact quantities, etc. will be available. The main purpose of the questions is to get an overall understanding, to get a feel for how much planning is taking place, how much data are available, and what are the unique problems that the refineries will encounter.

NOTICE
If the filmed image is less clear than this Notice it is due to the quality of the document being filmed.

CD2F 003

1088

NOTICE
If the filmed image is less clear than this Notice it is due to the quality of the document being filmed.

CD2F 003

1089

F037 AND F038 WASTE CAPACITY ANALYSIS:
DATA USE AND TRACKING SHEET

Refinery: Shell Oil - Anacortes Refinery
State: Washington

Data sources available:

_x_ Petroleum refinery visits/voluntary submission

_x_ National Survey of Hazardous Waste Treatment, Storage, Disposal, and Recycling Facilities (TSDR survey)

__ National Survey of Hazardous Waste Generators

__ Biennial report/state reporting requirements

__ California hazardous waste data base

_x_ Petroleum refinery data base (PRDB)

_x_ No-migration petitions

__ Comments form proposed rule

_x_ Organic TC Survey

Basis for F037 and F038 waste estimation:

EPA used data provided by Shell Oil (Anacortes Refinery) because it was the most recent and the only source that describes F037 and F038 waste generation and management. Other sources were used only in comparison with the refinery's data submission.

F037 and F038 waste estimates:

F037 (routine) - 125 tons/year from gravity clarifiers and sewer cleanouts. (100 tons/year from sewer cleanout and 25 tons/year from clarifiers).

F037 (one-time) - 200 tons from closure of a diversion impoundment. The impoundment will be replaced by a tank, which will be cleaned out every two to five years; therefore, the F037 sludge would not be generated continuously. (Shell Oil expects that F037 sludge generation in the tank would be less than 200 tons).

Shell Oil Anacortes does not anticipate generating F038 wastes.

According to more recent information from the TC survey, this facility indicated that it would generate the following quantities of surface

impoundment sludges during the indicated time periods:

F037/8 (surface impoundments) = 0 tons (7/92 - 12/92)

F037/8 (surface impoundments) = 0 tons (1/93 - 12/93)

F037/8 (surface impoundments) = 0 tons (1/94 - 12/94)

F037 (routine) = 192 tons/yr.

NOTICE
If the filmed image is less clear than this Notice it is due to the quality of the document being filmed.

CD2F 003

1090

NOTICE
If the filmed image is less clear than this Notice it is due to the quality of the document being filmed.

CD2F 003

1091

ICF KAISER ENGINEERS

ICF KAISER ENGINEERS, INC.
601 WILLIAMS BLVD., 4TH FLOOR
RICHLAND, WA 99352-3288
509/943-4640

TELECOPY (509) 943-5143
VERIFICATION (509) 943-4640

DATE	6-7-91
TO	Kevin McCarthey
ADDRESSEE'S PHONE	703 934 3243
COMPANY	ICF TECHNOLOGY
CITY/STATE	Fairfax, VA
TELECOPY NO.	(703) 934-9740
VERIFICATION NO.	
FROM	Sue Jones
SENDER'S PHONE NO.	509-946-2117
CHARGE NO.	02645 02800

THIS TRANSMISSION CONSISTS OF 8 PAGES
(INCLUDING COVER PAGE)

- NUMBER PAGES CONSECUTIVELY -

Kevin - please review & let me know what more that you need.

Sue

NOTICE
If the filmed image is less clear than this Notice it is due to the quality of the document being filmed.

CD2F 003

1092

F037/F038 WASTE CAPACITY ANALYSIS -- REFINERY INTERVIEW

STATE: Washington

COMPANY: Shell Oil Company

ADDRESS: SHell Oil Company
March Point Road
Anacortes, WA 98221

CONTACT: Ed Hsu PHONE NUMBER: 1-206-293-1618
POSITION: FAX NUMBER: 1-206-293-9190

REFERENCE: Kim Anderson, Wash. State Dept. of Ecology, Industrial Section

DATE: 6/6/91 TIME: 3:20 - 4:10 pm pst

CALLER: Susanne Jones EXTENSION: 509-946-2117

Shell Oil, Anacortes WA, cont.

I faxed a copy of the interview notes to Ed and advised him that if desired, the information would be considered CBI. He did not indicate that this was necessary, I will follow up to make sure.

F037 AND F038 QUESTIONS

We have developed a preliminary series of questions to aid in our understanding of how the new F037 and F038 waste listing and proposed land ban will affect refineries. These questions involve not only F037 and F038 wastes, but expand to K048-K052 and TC wastes, discuss past and future waste water treatment facility modifications, on site treatment, etc., in order for us to get an understanding of the whole picture and how everything interrelates. In addition to gaining an overall understanding of the issues, we want to discover any unique problems or treatability issues that refineries may have associated with these wastes.

1.0 Waste Water Treatment Facility

1.1 What is your current configuration?
See attached.

1.2 How segregated is your system, storm water vs. process water?

Storm water sewer collection is separate from the process sewer.

1.3 What modifications have been made in the last 5 years?

K wastes used to be land farmed: the sludge was applied to land along with fertilizer. The oil loading was controlled so that the bacteria wasn't smothered. K's are now incinerated at the Port Arthur facility.

Have a waste control/source minimization program in place for last three years.

1.4 What were the driving forces behind these modifications?

Land ban rulings.

1.5 What future modifications are planned?

By the end of 1992, all sewers will be covered and isolated, the API unit and aeration basin will be covered and have vapor controls. Also, the trickling filter will be converted to an aeration basin.

By the end of 1993, the diversion pond will be taken out and above ground tanks installed in its place.

NOTICE
If the filmed image is less clear than this Notice it is due to the quality of the document being filmed.

CD2F 003

1093

Shell Oil, Anacortes WA, cont.

1.6 What are the driving forces behind these modifications?

NESHAP and TC.

1.7 How have the K048-K052, TC and F037-F038 rulings and land bans affected the facility in terms of modifications, operation, capacity, etc.?

The regulations are confusing. It is hard to understand the land ban as applied to land treatment facilities. You can't landfarm K wastes, yet CERCLA indicates that biological treatment is desirable.

2.0 K048-K052 and TC Wastes

2.1 What is your estimated rate of generation and land disposal of K048-K052 and TC wastes?

These are the generation numbers. K wastes are sent to the Port Arthur incinerator. TC wastes are not tracked separately. Until landbanned, TC wastes are sent to the onsite land treatment facility.

(Quantity in Tons)	1988	1989	1990
K048 (DAF float)	------ no DAF units ------		
K049 (Slop oil emulsion)	48.67	0	1364
K050 (HTX sludge)	0	0	2.8
K051 (API sludge)	1254.0	319.0	488.0*
K052 (Pb tk btms)	0	1400.0	0

* (2440 bbl generated, 5 bbl/ton)

K051 is the only continuously generated stream, the rest occur during period cleanings.

2.2 How do you currently treat, recycle or dispose of these wastes and are there any foreseeable changes in the treatment, recycling or disposal?

The sludges are filter pressed, and sometimes dried, then sent for incineration.

2.3 How have the waste generation rates changed with the hazardous waste ruling and land ban?

Not at all. Waste reduction was achieved because of source control measures instituted by the plant. API sludge is now a third of what it used to be.

NOTICE
If the filmed image is less clear than this Notice it is due to the quality of the document being filmed.

CD2F 003

1094

NOTICE
If the filmed image is less clear than this Notice it is due to the quality of the document being filmed.

Shell Oil, Anacortes WA, cont.

2.4 Have there been any upstream or waste water treatment facility operating changes to reduce the amount of these wastes generated and how effective are these changes?

See 2.3

2.5 Will the proposed F037 and F038 land ban affect the amount of these wastes produced?

No. The only F wastes anticipated are from sewer cleanings. There is no impoundment basin ahead of the API separator, so no source of F waste here.

2.6 How much of these wastes are stockpiled in containers or surface impoundments?

None, it is sent for incineration.

2.7 What are the chemical and physical characteristics of the currently generated and stockpiled wastes (ie are they dewatered, do they have significant btu value, etc?)

Not applicable.

2.8 How will these characteristics change with any planned facility modifications and operating changes?

Not applicable.

2.9 What quantity of your secondary treatment waste, such as sludge form the aggressive biological units, is categorized as TC waste?

The biosludge from the aeration basin is nonhazardous by TCLP.

3.0 <u>F037/F038 Wastes</u>

3.1 Is these a current estimate of the amount of F037 and F038 wastes generated?

The only F wastes will come from gravity clarifiers (Ed Hsu 8/14/91) periodic clean out of the process sewer. Cleaning will occur once every few years, and will generate about 50-100 tons per cleaning. Gravity clarifiers generate about 25 tons/yr (Ed Hsu 8/17/91)

CD2F 003

1095

NOTICE
If the filmed image is less clear than this Notice it is due to the quality of the document being filmed.

Shell OXI, Ingeortes Wh, cont.

3.2 Is there an estimate of the amount of F037 and F038 wastes stockpile din containers or surface impoundments?

There is one diversion pond that will have to be closed. Closure will probably generate a one time amount of F waste. The pond is usually dry, but the clay liner contains some oil. (→ of 200 tons (Ed Hsu 8/19/91))

3.3 What are you currently doing with the stockpiled waste and what are your future plans?

The pond will be clean closed by the end of 1993.

3.4 What are the chemical and physical characteristics of both the currently generated and the stockpile wastes?

The pond closure will generate some oil containing material, but it will not trigger TC rules (< 0.5 ppm Benzene). The F waste from the sewer is sandy like and will probably trigger TC rules.

3.5 What is your current treatment, recycle or disposal method in relationship to F037 and F038 wastes?

It is currently land farmed as described earlier. When the land ban comes into effect it will be sent to the incinerator.

3.6 What are the capacities of these treatment, recycle or disposal methods in relationship to F037 and F038 wastes?

Treated offsite.

3.7 Are there any planned changes, either physical or operational, to deal with the land ban and how will these changes affect K048-K052 waste generation?

No changes planned, except to stop land farming. No change in K waste generation.

3.8 Is it possible to reduce F037/F038 or K048-K052 wastes by putting more of a load on the aggressive biological units?

No, these wastes are mostly sandy, inert material and there is not much that a bio unit can do. They are currently looking at a slurry reactor, but don't know if it would meet treatment standards.

CD2F 003

1096

Shell Oil, Anacortes WA, cont.

4.0 General

4.1 What are your offsite treatment options and are the unique features of your waste that would limit the treatability options?

Incineration.

4.2 What modifications have been done or are planned upstream to reduce the amount of waste generated in the waste water treatment facility (eg. pretreatment, source control, segregation, etc?)

They have instituted source control reductions -- see section 1.

4.3 Will the BIF ruling affect any of the current disposal options, onsite, captive or commercial?

No waste goes to these types of units.

4.4 Is there a preference on producing F037/F038 wastes in terms of handling or disposal?

No, the sewer cleanout won't be handled with the API material.

4.5 What is the frequency of clean out for the various waste water treatment units (eg. API, DAF, storage tank, surface impoundments, etc.)

The API is cleaned quarterly; there are no DAF units; storage tanks are on an inspection cycle and cleanout could be every 10-20 years. There are no surface impoundments.

NOTICE
If the filmed image is less clear than this Notice it is due to the quality of the document being filmed.

CD2F 003

1097

NOTICE
If the filmed image is less clear than this Notice it is due to the quality of the document being filmed.

CD2F 003

Shell - Anacortes

Page 7 - Shell Anacortes

PRIMARY TREATMENT
BIOLOGICAL TREATMENT
CLARIFICATION & SOLIDS HANDLING

API SEPARATOR
GRAVITY CLARIFIER
TRICKLE FILTER
ACTIVATED SLUDGE
GRAVITY CLARIFIER
DIVERSION POND
SALT FILTER
SECONDARY SOLIDS
PRIMARY SOLIDS
5% (450 tons)
SLUDGE DISCHARGE
SLUDGE POND
SLUDGE DRYING BED
AIR OPTIONAL
DIRTY OIL TO TRUCKS
LAND TREATMENT
SEPTIC TANK
AIR PUMP
SOUTH SEPTIC
SOUTH SUPPLY
SOUTH WELLS
SOUTH AIRLINE
SOUTH INSTRUMENTATION

1098

NOTICE
If the filmed image is less clear than this Notice it is due to the quality of the document being filmed.

CD2F 003

1099

F037 AND F038 WASTE CAPACITY ANALYSIS:
DATA USE AND TRACKING SHEET

Refinery: Texaco - Anacortes
State: Washington

Data sources available:

_x_ Petroleum refinery visits/voluntary submission

_x_ National Survey of Hazardous Waste Treatment, Storage, Disposal, and Recycling Facilities (TSDR survey)

__ National Survey of Hazardous Waste Generators

__ Biennial report/state reporting requirements

__ California hazardous waste data base

_x_ Petroleum refinery data base (PRDB).

_x_ No-migration petitions

_x_ Comments form proposed rule

__ Organic TC Survey

Basis for F037 and F038 waste estimation:

EPA used data provided by Texaco (Anacortes Refinery) because it was the most recent and the only source that describes F037 and F038 waste generation and management. Other sources were used only in comparison with the refinery's data submission.

F037 and F038 waste estimates:

F037 (routine) = 3,000 tons/year from sewer and equalization tank (install by 1992) cleanout.

F037 (one-time) = 25,000 tons from closure of stormwater/process water impoundments, and equalization basin (to be closed by 1992).

Texaco Anacortes does not anticipate generating F038 wastes.

According to more recent information from the comments to the proposed rule, this facility indicated that it would generate the following quantities of surface impoundment sludges during the indicated time periods:

F037/8 (surface impoundments) = 0 tons (7/92 - 12/92)

F037/8 (surface impoundments) = 0 tons (1/93 - 12/93)

F037/8 (surface impoundments) = 0 tons (1/94 - 12/94)

NOTICE
If the filmed image is less clear than this Notice it is due to the quality of the document being filmed.

CD2F 003

1100

NOTICE
If the filmed image is less clear than this Notice it is due to the quality of the document being filmed.

CD2F 003

ICF KAISER ENGINEERS

ICF KAISER ENGINEERS, INC.
601 WILLIAMS BLVD., 4TH FLOOR
RICHLAND, WA 99352-3258
509/943-4640

TELECOPY (509) 943-5143
VERIFICATION (509) 943-4640

DATE 6-13-91

TO Kevin McCarthy

ADDRESSEE'S PHONE 703 934 3243

COMPANY ICF TECHNOLOGY

CITY/STATE Fairfax, VA

TELECOPY NO. (703) 934-9740

VERIFICATION NO. -

FROM Sue Jones

SENDER'S PHONE NO. 509 946 2117

CHARGE NO. 02645 02800

THIS TRANSMISSION CONSISTS OF 8 PAGES
(INCLUDING COVER PAGE)

- NUMBER PAGES CONSECUTIVELY -

F037/F038 WASTE CAPACITY ANALYSIS -- REFINERY INTERVIEW

STATE: Washington

COMPANY: Texaco

ADDRESS: Texaco, USA
P.O. Box 622
Anacortes, WA 98221

CONTACT: Varn Stevens
POSITION: Senior Project Chemist
Environmental, Safety and Health, Dept.

PHONE NUMBER: 1-206-293-0685
FAX NUMBER: 1-206-293-1584

REFERENCE: Kim Anderson, Wash. State Dept. of Ecology, Industrial Section

DATE: 6/11/91 TIME: 8:45-9:30 AM, PST

CALLER: Susanne Jones EXTENSION: 509-946-2117

Notes:

- CBI claims? None
- Need to fax information to contact person? Sent copy of interview guide and J. Bassi cover letter
- Items contact will send: waste treatment schematic

NOTICE
If the filmed image is less clear than this Notice it is due to the quality of the document being filmed.

CD2F 003

1102

NOTICE
If the filmed image is less clear than this Notice it is due to the quality of the document being filmed.

CD2F 003

1103

F037/F038 WASTE CAPACITY ANALYSIS -- REFINERY INTERVIEW

STATE: Washington

COMPANY: Texaco

ADDRESS: Texaco, USA
P.O. Box 622
Anacortes, WA 98221

CONTACT: Vern Stevens PHONE NUMBER: 1-206-293-0685
POSITION: Senior Project Chemist FAX NUMBER: 1-206-293-1584
Environmental, Safety and Health, Dept.

REFERENCE: Kim Anderson, Wash. State Dept. of Ecology, Industrial Section

DATE: 6/11/91 TIME: 8:45-9:30 AM, PST

CALLER: Susanna Jones , EXTENSION: 509-946-2117

Notes:

- CBI claims? None

- Need to fax information to contact person? Sent copy of interview guide and J. Bassi cover letter

- Items contact will send: waste treatment schematic

Texaco, Anacortes WA

F037 AND F038 QUESTIONS

We have developed a preliminary series of questions to aid in our understanding of how the new F037 and F038 waste listing and proposed land ban will affect refineries. These questions involve not only F037 and F038 wastes, but expand to K048-K052 and TC wastes, discuss past and future waste water treatment facility modifications, on site treatment, etc., in order for us to get an understanding of the whole picture and how everything interrelates. In addition to gaining an overall understanding of the issues, we want to discover any unique problems or treatability issues that refineries may have associated with these wastes.

1.0 Waste Water Treatment Facility

1.1 What is your current configuration?

See attached.

1.2 How segregated is your system, storm water vs. process water?

There are two sewer systems. The process sewer takes process waste water and storm water runoff from process units and sends it to the bio system. There is a separate storm water sewer for the rest of the storm water runoff. This is sent to a holding pond and is discharged with treated process water.

1.3 What modifications have been made in the last 5 years?

No major modifications.

1.4 What were the driving forces behind these modifications?

Not applicable.

1.5 What future modifications are planned?

By April 1992, the following will be installed:
- The two overflow basins will be replaced by two 80,000 bbl. tanks. These basins currently take off test water, or water that is in excess of the bio system capacity.
- The equalization basin will be replaced by an 20,000 bbl. tank.
- The API and DAF units will be covered. A third DAF unit will be installed. New aerators and clarifiers will be added.
- The aeration pond and settling ponds will be removed from service.
- The outfall pumps will be changed, and diffusers will be installed at the dock.

NOTICE
If the filmed image is less clear than this Notice it is due to the quality of the document being filmed.

CD2F 003

1104

NOTICE
If the filmed image is less clear than this Notice it is due to the quality of the document being filmed.

1.6 What are the driving forces behind these modifications?

RCRA, new performance standards, NPDES.

1.7 How have the K048-K052, TC and F037-F038 rulings and land bans affected the facility in terms of modifications, operation, capacity, etc.?

Until now, all K wastes were land farmed, with the exception of slop oil emulsions and DAF float. The latter two go to the coker. Most of this is now going to the coker (about 200 T/yr). API bottoms will have to be sent offsite to an incinerator.

TC: tanks will now be used to hold offtest water and for equalization. The effluent plant water is hazardous, so effluent plant becomes a waste water treatment unit, thus operators will have to be trained and certified.

2.0 K048-K052 and TC Wastes

2.1 What is your estimated rate of generation and land disposal of K048-K052 and TC wastes?

(Quantities in Tons)	1988	1989	1990	Estimated 1991
K048 (DAF float)	0	15.0	231*	9*
K049 (Slop oil emulsion)	0	50.2	714	~700
K050 (HTX sludge)	1.4	14.0	2	~10
K051 (API sludge)	317.2	917.3	76	~450
K052 (Pb tk btms)	32.0	0	0	~10

* to coker

2.2 How do you currently treat, recycle or dispose of these wastes and are there any foreseeable changes in the treatment, recycling or disposal?

The DAF float and slop oil had been land farmed. DAF float is also sent to the coker. Currently, sludge either goes to the coker or is pressed and sent to an incinerator in North Carolina.

2.3 How have the waste generation rates changed with the hazardous waste ruling and land ban?

The generation rates have not changed, but the method of disposal has.

2.4 Have there been any upstream or waste water treatment facility operating changes to reduce the amount of these wastes generated and how effective are these changes?

No.

CD2F 003

1105

Texaco, Anacortes WA

2.5 Will the proposed F037 and F038 land ban affect the amount of these wastes produced?

Only in the sense that they have been reclassified from non-hazardous to hazardous.

2.6 How much of these wastes are stockpiled in containers or surface impoundments?

None.

2.7 What are the chemical and physical characteristics of the currently generated and stockpiled wastes (ie are they dewatered, do they have significant btu value, etc?)

Not applicable.

2.8 How will these characteristics change with any planned facility modifications and operating changes?

Not applicable.

2.9 What quantity of your secondary treatment waste, such as sludge from the aggressive biological units, is categorized as TC waste?

None.

3.0 F037/F038 Wastes

3.1 Is these a current estimate of the amount of F037 and F038 wastes generated?

Most of this will come from cleaning out the sewer. The rest will come from the API unit, solids that settle out from the overflow basin and the DAF units (only about 5T from here). The basin will be cleaned this year and should generate about 5000 Tons. In 1992, the ponds will be closed so this should generate a large one time quantity -- about 20,000 Tons. After 1992, it should go down to about 500-3000 Tons/year.

3.2 Is there an estimate of the amount of F037 and F038 wastes stockpile din containers or surface impoundments?

None, unless you include the clean out of the pond bottoms. This amounts to about 3000T.

3.3 What are you currently doing with the stockpiled waste and what are your future plans?

Not applicable.

NOTICE
If the filmed image is less clear than this Notice it is due to the quality of the document being filmed.

CD2F 003

1106

NOTICE
If the filmed image is less clear than this Notice it is due to the quality of the document being filmed.

Texaco, Anacortes WA

3.4 What are the chemical and physical characteristics of both the currently generated and the stockpile wastes?

It is the same as the API bottoms. It is heavier than water, about 50% ash and sand, 20% oil and heavy aromatics, and the rest is water. It doesn't trigger TCLP.

3.5 What is your current treatment, recycle or disposal method in relationship to F037 and F038 wastes?

Land farming in a hazardous waste land farm.

3.6 What are the capacities of these treatment, recycle or disposal methods in relationship to F037 and F038 wastes?

The land farm can handle 10,000 tons of oil per year.

3.7 Are there any planned changes, either physical or operational, to deal with the land ban and how will these changes affect K048-K052 waste generation?

Housekeeping can reduce the load on the API unit, eg. by cleaning out the sewers on a routine basis, putting sand bags in the process sewer to help the solids settle out, sweep up the dirt on the process units rather than wash it into the sewer, and keep the coker solids out of the sewer.

3.8 Is it possible to reduce F037/F038 or K048-K052 wastes by putting more of a load on the aggressive biological units?

No.

4.0 General

4.1 What are your offsite treatment options and what are the unique features of your waste that would limit the treatability options?

The treatment options are to press and reduce the waste, then send it to a cement kiln or incinerator. There should be no limits.

4.2 What modifications have been done or are planned upstream to reduce the amount of waste generated in the waste water treatment facility (eg. pretreatment, source control, segregation, etc?)

Better housekeeping.

4.3 Will the BIF ruling affect any of the current disposal options, onsite, captive or commercial?

No.

CD2F 003

Texaco, Anacortes WA

4.4 Is there a preference on producing F037/F038 wastes in terms of handling or disposal?

Currently, it is preferable to generate F waste because you can still land farm it.

In general, it is hard to see how incineration can be preferable to land farming - how can using up charcoal in the pressing step, shipping the pressed cake clear across the country, then incinerating it with no product recovery be the better alternative?

4.5 What is the frequency of clean out for the various waste water treatment units (eg. API, DAF, storage tank, surface impoundments, etc.)

The API settling tank is cleaned every three months, the DAF, every two years, tanks are continuously drained and sludge is cleaned out about every other year. As for ponds, the overflow basin in cleaned every six months, but these are to be replaced by tanks. Slop oil emulsion is sent daily to the coker. The heat exchangers are cleaned during turnarounds, about every 5 years or less.

While some of these questions are very specific, we realize that initially not all of the exact quantities, etc. will be available. The main purpose of the questions is to get an overall understanding, to get a feel for how much planning is taking place, how much data are available, and what are the unique problems that the refineries will encounter.

NOTICE
If the filmed image is less clear than this Notice it is due to the quality of the document being filmed.

CD2F 003

1108

LOCATION PUGET SOUND PLANT
SUBJECT WASTE WATER TREATMENT PLANT
Texaco - Anacortes

SH. NO. 1 OF 1
DATE 11/18/88
BY TCW
CHKD. BY
APPVD. BY
CHIEF ENGR
FILE NO. 08-044

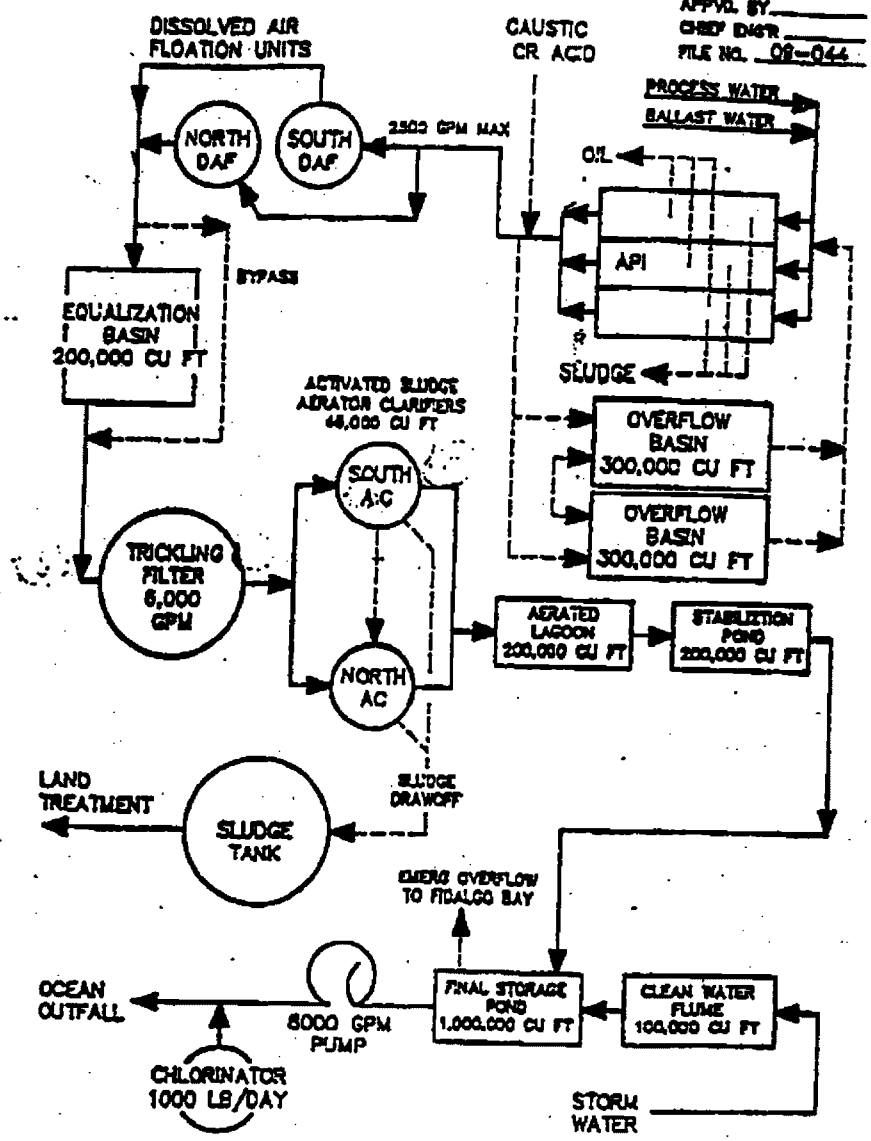

SK 11/18/88

NOTICE
If the filmed image is less clear than this Notice it is due to the quality of the document being filmed.

CD2F 003

1109

F037 AND F038 WASTE CAPACITY ANALYSIS:
DATA USE AND TRACKING SHEET

Refinery: Quaker State - Newell Refinery
State: West Virginia

Data sources available:

_x_ Petroleum refinery visits/voluntary submission

_x_ National Survey of Hazardous Waste Treatment, Storage, Disposal, and Recycling Facilities (TSDR survey)

__ National Survey of Hazardous Waste Generators

__ Biennial report/state reporting requirements

__ California hazardous waste data base

_x_ Petroleum refinery data base (PRDB)

__ No-migration petitions

Basis for F037 and F038 waste estimation:

EPA used data provided by Quaker State (McKean Refinery) because it was the most recent and the only source that describes F037 and F038 waste generation and management. Other sources were used only in comparison with the refinery's data submission.

F037 and F038 waste estimates:

F037 (routine) - 100 tons/year is from sewer cleanouts.

Other than the F037 waste from sewer cleanouts, Quaker State does not appear to generate any other F037 and F038 wastes.

NOTICE
If the filmed image is less clear than this Notice it is due to the quality of the document being filmed.

CD2F 003

SENT BY:Xerox Telecopier 7020 ; 7-24-91 ; 14:17 ; 8146767030→ 412 281 5220;# 1

NOTICE
If the filmed image is less clear than this Notice it is due to the quality of the document being filmed.

Quaker State.

FACSIMILE
COVER LETTER
FAX # (814) 676-7030

DATE: 7/23/91

PLEASE DELIVER THE FOLLOWING PAGE(S) TO:

NAME: KUNAL BANERJEE, QC7 Inc.

TOTAL NUMBER OF PAGES: 3
(including this cover page)

INFORMATION FROM: Herb Butcher

PHONE NUMBER OF SENDER: 814 676 7664

IF YOU DO NOT RECEIVE ALL THE PAGES INDICATED

PLEASE CALL SENDER AT PHONE NUMBER LISTED ABOVE

CD2F 003

NOTICE
If the filmed image is less clear than this Notice it is due to the quality of the document being filmed.

CD2F 003

Neither waste is suitable for fuels blending. The K051 has no Btu content and the K048 has a very low Btu that varies widely between shipments. Neither waste is stored or stockpiked onsite. The K051 is dewatered at generation to a solids content of approx. 50%. The K048 is about 75% water. Unfortunately, our incinerator can not handle bulk solids in other than drum quantities. There is no economic incentive to dewater the K048 for "side-door" incineration and we hesitate to switch from a dependable TSD.

None of our secondary treatment waste is characteristic.

F037 and F038 Wastes

We estimate 100 tons/year of F037 & F038. None of this waste is stockpiled. On generation, usually during maintenance or clean-out, the sludge will be dewatered and disposed of. Any oil recovered will be re-charged to our units. In general, the waste will be 40% solids after dewatering, non-ignitable,non-reactive, and non- TCLP toxic. Most of this waste will be landfilled until a land ban. Afterwards, we will probably have it incinerated regardless of minimal contaminant levels.

Again, we do not expect K048 & K051 volumes to change due to the F037/F038 rulings. We could however eliminate our K048 stream by discontinuing dissolved air flotation. The effect on secondary treatment would be barely noticeable.

General

We prefer incineration for our "K" wastes. Therefore these wastes, having no economic/fuel value, will continue to be incinerated as long as we can access capacity. No policies have been developed in-house concerning the F037/F038 pending more information. We have no preference regarding "K" vs "F" wastes.We do not believe modifications upstream to the API's will significantly reduce volumes. At present we clean the API's semi-annually and the DAF Float Accumulation tanks every 5 weeks. Units containing F037/F038 will be cleaned as needed.

X

NOTICE
If the filmed image is less clear than this Notice it is due to the quality of the document being filmed.

CD2F 003

Waste Water Treatment Facility

All process wastewater & contaminated stormwater flow into a common sewer leading to our two API separators. Contaminated stormwater includes water run-off from within our tank farms as well as that from the concreted process units . Flow from the tank fields can be withheld through block valves located at the tank dike walls. Process Unit stormwater is not held back. At present, a contaminated stormwater basin equalizes wet weather flow (and waste loading to a lesser extent).Within the year,added stormwater capacity will be added through the addition of tankage effectively doubling our stormwater retention capacity. This in response to unusually heavy rainfall periods during recent years.

Uncontaminated stormwater flows through a separate sewer system.Essentially this water consists of all water falling outside the boundaries of the tank fields, process units, or any other possible contaminate source. Of approx. 100 acres within Plant boundaries, 75 acres consist of roads and undeveloped grassy fields draining into the uncontaminated sewer system.

After the API separators, our treatment scheme includes dual Dissolved Air Flotation Units, biological treatment via extended aeration, sand filtration (2-units), and hydrogen peroxide disinfection. The sand filtration and peroxide disinfection were added just over 6 years ago for NPDES permitting. There are no current plans to alter our treatment configuration.

The K048-K052 and TCLP rulings have not affected operation. Our wastes are not characteristic under the new test procedures and we have been incinerating these wastes since 1982. Please note however that some scheduling problems for incineration are now being encountered due to shortfalls in capacity. We are unsure how much F037 - F038 will be generated under the new rulings. However, we expect these wastes to be non-characteristic as well.

K048 - K052 and TC Wastes

Our K048 - K052 wastes amount to approx. 250 tons/year and should remain so for the forseeable future. Again, these wastes are incinerated and have been for some time. Under the new toxicity parameters, we expect to generate another 100 tons /year under D018 (gasoline contaminated wastes). The D018 will be incinerated or landfilled based on concentration and volume of each generated amount.

Our "K" wastes are comprised of approx. 90% DAF Float and

these wastes. The only way to slow generation of these wastes is to cut production or limit BS&W content. Obviously we do not wish to limit production and with crude supplies as they are, we have little leverage over our independant producers.

NOTICE
If the filmed image is less clear than this Notice it is due to the quality of the document being filmed.

CD2F 003