United States
Environmental Protection
Agency

Office of Water
4603

EPA 811-D-93-002
April 1993

EPA

LARGE WATER SYSTEM BYPRODUCTS TREATMENT AND DISPOSAL COST DOCUMENT

Information Resources Center
US EPA (3404)
401 M Street, SW
Washington, DC 20460

U.S. EPA Headquarters Library
Mail code ~~3201~~ 3404T
1200 Pennsylvania Avenue NW
Washington DC 20460

LARGE WATER SYSTEM BYPRODUCTS TREATMENT AND DISPOSAL COST DOCUMENT

Prepared for:

U.S. Environmental Protection Agency
Office of Ground Water and Drinking Water
Drinking Water Standards Division
401 M Street S.W.
Washington, D.C. 20460

Prepared by:

DPRA Incorporated
E-1500 First National Bank Building
332 Minnesota Street
St. Paul, Minnesota 55101

April 1993

Notice

This document has been reviewed in accordance with U.S. Environmental Protection Agency policy and approved for publication. Mention of trade names or commercial products does not constitute endorsement or recommendation for use.

TABLE OF CONTENTS

Page

1.0 INTRODUCTION 1

1.1 BACKGROUND 1
1.2 PURPOSE AND SCOPE 1
1.3 WATER TREATMENT PROCESSES 2
1.4 BYPRODUCTS GENERATED 6
1.5 BYPRODUCTS MANAGEMENT OPTIONS OVERVIEW 7

2.0 BYPRODUCT CHARACTERIZATION 8

2.1 INTRODUCTION 8
2.2 CHEMICAL COAGULATION AND FILTRATION 9
2.3 LIME SOFTENING 11
2.4 ION EXCHANGE 12
2.5 REVERSE OSMOSIS 14
2.6 BYPRODUCT DENSITIES 14
2.7 REFERENCES 16

3.0 COST ASSUMPTIONS 17

3.1 INTRODUCTION 17
3.2 CAPITAL COST ASSUMPTIONS 17
3.3 OPERATION AND MAINTENANCE ASSUMPTIONS 19
3.4 ANNUAL CAPITAL COST ASSUMPTIONS 20
3.5 COST COMPONENTS EXCLUDED 21
3.6 COST EQUATIONS 22
3.7 CALCULATING BYPRODUCT MANAGEMENT COSTS 23

4.0 GRAVITY THICKENING 28

4.1 TECHNOLOGY DESCRIPTION 28
4.2 TECHNOLOGY APPLICABILITY AND LIMITATIONS 29
4.3 COST COMPONENTS 29

4.3.1 Design Assumptions 29
4.3.2 Capital Cost Components 30
4.3.3 Operation and Maintenance Components 30
4.3.4 Cost Components Excluded 31

4.4 GRAVITY THICKENING COST EQUATIONS 32

TABLE OF CONTENTS
(continued)

Page

5.0 CHEMICAL PRECIPITATION 34

5.1 TECHNOLOGY DESCRIPTION 34
5.2 TECHNOLOGY APPLICABILITY 34
5.3 TECHNOLOGY LIMITATIONS 35
5.4 COST COMPONENTS 35

5.4.1 Design Assumptions 36
5.4.2 Capital Components 36
5.4.3 Operation and Maintenance Components 37
5.4.4 Cost Components Excluded 37

5.5 COST EQUATIONS 38

6.0 MECHANICAL DEWATERING 40

6.1 PRESSURE FILTER PRESS DESCRIPTION 40
6.2 TECHNOLOGY APPLICABILITY 41
6.3 TECHNOLOGY LIMITATIONS 41
6.4 PRESSURE FILTER PRESS COST COMPONENTS 42

6.4.1 Design Assumptions 42
6.4.2 Capital Components 42
6.4.3 Operation and Maintenance Components 43
6.4.4 Cost Components Excluded 45

6.5 PRESSURE FILTER PRESS COST EQUATIONS 45
6.6 SCROLL CENTRIFUGE DESCRIPTION 46
6.7 TECHNOLOGY APPLICABILITY 47
6.8 TECHNOLOGY LIMITATIONS 48
6.9 SCROLL CENTRIFUGE COST COMPONENTS 48

6.9.1 Design Assumptions 48
6.9.2 Capital Components 49
6.9.3 Operation and Maintenance Components 49
6.9.4 Cost Components Excluded 50

6.10 SCROLL CENTRIFUGE COST EQUATIONS 51

TABLE OF CONTENTS
(continued)

Page

7.0 NONMECHANICAL DEWATERING 53

7.1 LAGOON DESCRIPTION 53
7.2 TECHNOLOGY APPLICABILITY 54
7.3 TECHNOLOGY LIMITATIONS 55
7.4 STORAGE LAGOONS COST COMPONENTS 56

7.4.1 Design Assumptions 56
7.4.2 Capital Components 57
7.4.3 Operation and Maintenance Components 59
7.4.4 Cost Components Excluded 59

7.5 LIME SOFTENING STORAGE LAGOON COST EQUATIONS 59
7.6 ALUM SLUDGE STORAGE LAGOONS COST EQUATIONS 61

8.0 EVAPORATION PONDS 63

8.1 TECHNOLOGY DESCRIPTION 63
8.2 TECHNOLOGY APPLICABILITY 64
8.3 TECHNOLOGY LIMITATIONS 64
8.4 COST COMPONENTS 65

8.4.1 Design Assumptions 65
8.4.2 Capital Components 66
8.4.3 Operation and Maintenance Components 66
8.4.4 Cost Components Excluded 67

8.5 COST EQUATIONS 67

9.0 POTW DISCHARGE 70

9.1 TECHNOLOGY DESCRIPTION 70
9.2 TECHNOLOGY APPLICABILITY 71
9.3 TECHNOLOGY LIMITATIONS 72
9.4 COST COMPONENTS 72

9.4.1 Design Assumptions 73
9.4.2 Capital Components 73
9.4.3 Operation and Maintenance Components 73

TABLE OF CONTENTS
(continued)

Page

9.4.4 Cost Components Excluded 74

9.5 COST EQUATIONS 75

9.5.1 500 Feet of Discharge Pipe 75
9.5.2 1000 Feet of Discharge Pipe 76
9.5.3 500 Feet of Discharge Pipe with a Holding Tank or Lagoon 77
9.5.4 1000 Feet of Discharge Pipe with a Holding Tank or Lagoon 79

10.0 DIRECT DISCHARGE 81

10.1 TECHNOLOGY DESCRIPTION 81
10.2 TECHNOLOGY APPLICABILITY 82
10.3 TECHNOLOGY LIMITATIONS 82
10.4 COST COMPONENTS 83

10.4.1 Design Assumptions 83
10.4.2 Capital Components 83
10.4.3 Operation and Maintenance Components 84
10.4.4 Cost Components Excluded 85

10.5 COST EQUATIONS 85

10.5.1 500 Feet of Discharge Pipe 85
10.5.2 1000 Feet of Discharge Pipe 86
10.5.3 500 Feet of Discharge Pipe with a Holding Tank or Lagoon 87
10.5.4 1000 Feet of Discharge Pipe with a Holding Tank or Lagoon 88

11.0 LAND APPLICATION 90

11.1 TECHNOLOGY DESCRIPTION 90
11.2 TECHNOLOGY APPLICABILITY 91
11.3 TECHNOLOGY LIMITATIONS 92
11.4 LIQUID SLUDGE LAND APPLICATION COST COMPONENTS . . 93

TABLE OF CONTENTS
(continued)

Page

11.4.1 Design Assumptions 93
11.4.2 Capital Components 94
11.4.3 Operation and Maintenance Components 94
11.4.4 Cost Components Excluded 95

11.5 LIQUID SLUDGE LAND APPLICATION COST EQUATIONS 95

11.5.1 Sprinkler System 95
11.5.2 Trucking System 96

11.6 DEWATERED SLUDGE LAND APPLICATION COST COMPONENTS 97

11.6.1 Design Assumptions 97
11.6.2 Capital Components 97
11.6.3 Operation and Maintenance Components 98
11.6.4 Cost Components Excluded 98
11.7 DEWATERED SLUDGE LAND APPLICATION COST EQUATIONS 98

12.0 NONHAZARDOUS WASTE LANDFILL 101

12.1 TECHNOLOGY DESCRIPTION 101
12.2 TECHNOLOGY APPLICABILITY AND LIMITATIONS 102
12.3 OFF-SITE NONHAZARDOUS WASTE LANDFILL COST COMPONENTS 103

12.3.1 Cost Assumptions 103
12.3.2 Cost Components 103

12.4 OFF-SITE NONHAZARDOUS WASTE LANDFILL COST EQUATION 104
12.5 ON-SITE NONHAZARDOUS WASTE LANDFILL COST COMPONENTS 104

12.5.1 Design Assumptions 104
12.5.2 Capital Components 105
12.5.3 Operation and Maintenance Components 105

TABLE OF CONTENTS
(continued)

Page

12.5.4 Closure Components 105
12.5.5 Post-Closure Components 105
12.5.6 Cost Components Excluded 106

12.6 ON-SITE NONHAZARDOUS WASTE LANDFILL COST EQUATIONS 106

13.0 HAZARDOUS WASTE LANDFILL 108

13.1 TECHNOLOGY DESCRIPTION 108
13.2 TECHNOLOGY APPLICABILITY AND LIMITATIONS 109
13.3 COST COMPONENTS 110

13.3.1 Cost Assumptions 110
13.3.2 Cost Components 110
13.3.3 Cost Components Excluded 111

13.4 TOTAL ANNUAL COST EQUATION 111

13.4.1 Hazardous Waste Disposal 111
13.4.2 Stabilization and Hazardous Waste Disposal 111

14.0 RADIOACTIVE WASTE DISPOSAL 112

14.1 SOURCES OF RADIOACTIVITY IN DRINKING WATER 112
14.2 RADIUM REMOVAL 113
14.3 LOW-LEVEL RADIOACTIVE WASTE DISPOSAL 114

14.4 COST INFORMATION 116

15.0 REFERENCES 117

Appendix A - POTW Charges

TABLE OF CONTENTS
(continued)

Page

LIST OF TABLES

Table 1 - Water System Categories 2
Table 2 - Chemical Coagulation Sludge Volumes 9
Table 3 - Lime Softening Sludge Volumes 12
Table 4 - Ion Exchange Brine Volumes 13
Table 5 - Reverse Osmosis Brine Volumes 15
Table 6 - Capital Cost Factors And Selected Unit Costs 18
Table 7 - Operation and Maintenance Cost Factors And Unit Costs 20
Table 8 - Treatment System Sizing 24
Table 9 - Gravity Thickening 31
Table 10 - Chemical Precipitation 37
Table 11 - Pressure Filter Presses 44
Table 12 - Scroll Centrifuge 50
Table 13 - Storage Lagoons - Lime Softening Sludge 58
Table 14 - Storage Lagoons - Alum Sludge 58
Table 15 - Evaporation Ponds 67
Table 16 - POTW Discharge 74
Table 17 - Direct Discharge 84
Table 18 - Liquid Sludge Land Application 94
Table 19 - Dewatered Sludge Land Application 98

LIST OF FIGURES

Figure 1 - Sludge/Slurry Producing Water Treatment Processes 4
Figure 2 - Brine Producing Water Treatment Processes 5
Figure 3 - Brine Treatment and Disposal Options 25
Figure 4 - Sludge/Slurry Treatment and Disposal Options 26

1.0 INTRODUCTION

1.1 BACKGROUND

The Safe Drinking Water Act (SDWA) Amendments of 1986 require the United States Environmental Protection Agency (EPA) to list the best available technologies (BAT) capable of meeting maximum contaminant level regulations. BAT is developed to assist EPA in setting drinking water standards, particularly for taking into consideration the capabilities of various treatment technologies for removing contaminants from water, to assist water utilities in selecting appropriate treatment methods to meet the regulations, and to identify treatment technologies that are appropriate for small systems under Section 1415 of the SDWA.

The Office of Ground Water and Drinking Water (OGWDW) must assess the waste treatment and disposal practices likely to be used by the regulated community as part of its responsibilities to determine the costs of the National Primary Drinking Water Regulations. A separate document addresses the byproduct management methods for small water treatment systems.[1]

1.2 PURPOSE AND SCOPE

The purpose of this document is to present methods to estimate water byproduct management costs for public water systems. Water systems addressed in this document include systems in Categories 5 through 12 identified in Table 1. These systems are designed for populations ranging from 3,301 people to more than one million people and have design flow rates ranging from 1.8 to 430 million gallons per day (MGD).

---

[1] Small Water System Byproducts Treatment and Disposal Cost Document, Draft Final, DPRA Incorporated, April 1993.

TABLE 1

WATER SYSTEM CATEGORIES

Category	Population Range	Median Population	Average Flow (MGD)	Design Flow (MGD)
1	25–100	57	0.0056	0.024
2	101–500	225	0.024	0.087
3	501–1,000	750	0.086	0.27
4	1,001–3,300	1,910	0.23	0.65
5	3,301–10,000	5,500	0.7	1.8
6	10,001–25,000	15,500	2.1	4.8
7	25,001–50,000	35,500	5	11
8	50,001–75,000	60,000	8.8	18
9	75,001–100,000	88,100	13	26
10	100,001–500,000	175,000	27	51
11	500,001–1,000,000	730,000	120	210
12	Greater than 1,000,000	1,550,000	270	430

Source: U.S. EPA, OGWDW.

This document contains technology descriptions and the estimated costs for the treatment and disposal of water treatment byproducts. Selected waste treatment and disposal options are included in this document. These options are intended to provide a general overview of costs associated with the treatment and disposal of water treatment byproducts.

1.3 WATER TREATMENT PROCESSES

Four primary water treatment processes that produce byproducts are considered in this

document: 1) coagulation and filtration, 2) lime softening, 3) ion exchange, and 4) reverse osmosis. Although this cost analysis focuses on byproducts from these four water treatment processes, the costs presented in this document are applicable to byproducts from other water treatment processes that produce similar residuals. The byproducts result from the material in the unprocessed water (i.e., suspended and dissolved materials) and/or from the chemicals used to remove this material. Coagulation, filtration, and lime softening generate byproducts classified as sludges and slurries. Ion exchange and reverse osmosis generate byproducts classified as brines. Figures 1 and 2 present simplified flow diagrams of these four water treatment processes. A brief description of each of these water treatment technologies is presented below.

Coagulation and Filtration

Coagulation and filtration, also referred to more generically as suspended solids removal, are processes used to remove a variety of substances including particulate matter that causes turbidity, microorganisms, color, disinfection byproduct precursors, and some inorganic contaminants. This type of treatment typically is used for surface water. The treatment process consists of three phases: 1) addition of a coagulant which is vigorously mixed throughout the water being treated, 2) light agitation of the water for a period of time to promote particle growth and agglomeration, and 3) settling and/or filtration of the flocculent. The resultant waste byproduct is a sludge or slurry.

Lime Softening

Lime softening, also referred to as precipitative softening, can remove a wide range of contaminants including turbidity, microorganisms, calcium, magnesium, barium, radium, cadmium, lead, zinc, chromium III, and arsenic V. Precipitation of these contaminants is performed by the addition of lime or lime with soda ash. Lime softening is often followed by a coagulation and sedimentation stage to improve removal of the particulate matter. This treatment typically is used for ground water; however, in some regions of the country, river water also may require softening. The resultant waste byproduct is a sludge or slurry consisting of a high pH calcium hydroxide flocculent.

Figure 1

SLUDGE/SLURRY PRODUCING WATER TREATMENT PROCESSES

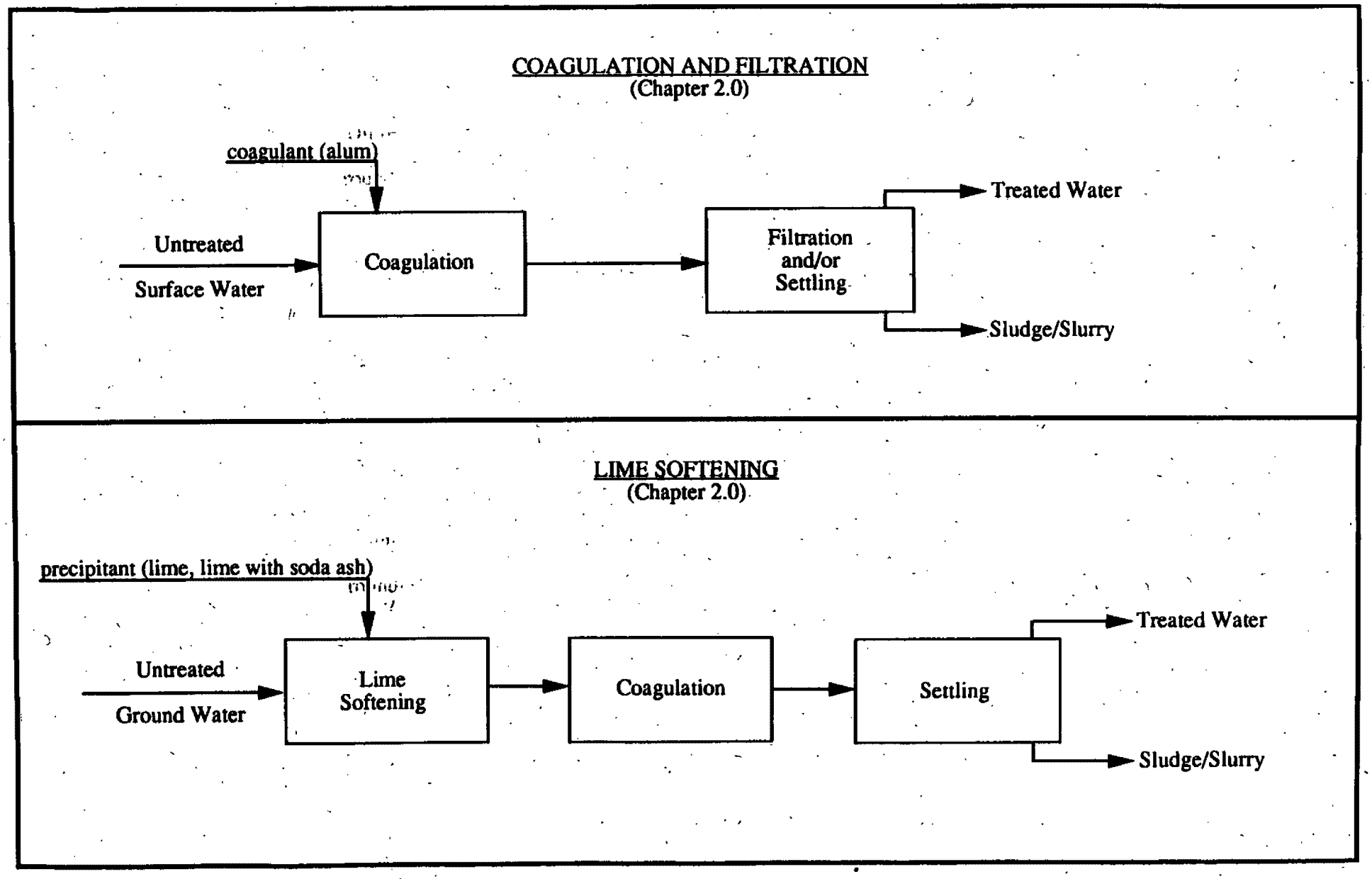

Figure 2

BRINE PRODUCING WATER TREATMENT PROCESSES

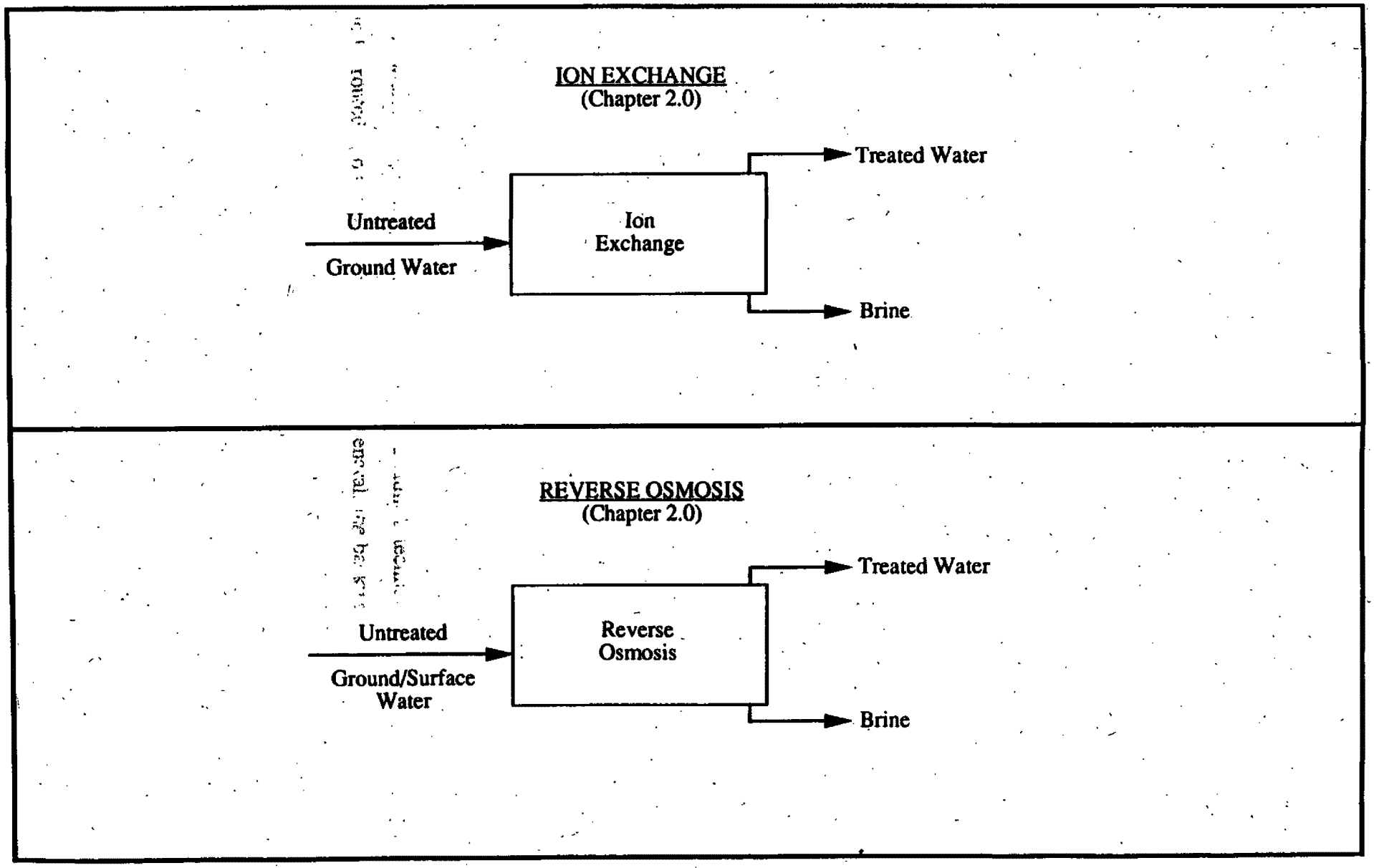

Ion Exchange

Historically, ion exchange was used to remove hardness-causing cations, such as calcium and magnesium; however, currently it also is used to remove radium, barium, iron, manganese, cadmium, lead, chromium III and VI, nitrates, uranium, selenium, and arsenic V. This treatment typically works best on ground waters, since surface waters frequently require pretreatment to remove turbidity. Ion exchange is a separation process in which dissolved ions undergo a phase transfer from a solution to a solid-surface phase. The resultant waste byproduct is a brine.

Reverse Osmosis

Reverse osmosis is used to treat water to remove a wide variety of contaminants including ions in brackish water, ions that cause hardness, uranium, radium, and most inorganics regulated under the SDWA. Reverse osmosis is not used to remove mercury or arsenic III. It is a membrane-separation technique in which a semipermeable membrane allows water to permeate through it while acting as a barrier to the passage of dissolved, colloidal, and particulate matter. The resultant waste byproduct is a brine.

1.4 BYPRODUCTS GENERATED

The byproducts generated are classified as either sludges and slurries or brines. The sludges and slurries are water-solid mixtures where the solids or particulates comprise at least 0.5 percent of the mixture and the solids are suspended rather than dissolved. Brines are solutions with a dissolved salt concentration rather than an undissolved phase as with sludges and slurries. Backwash water, whose composition depends on the water treatment technology employed, is assumed to be routed into the byproducts stream. In general, the backwash stream has a composition similar enough to the primary byproduct for this to be practical. The backwash volume is included in the volumes considered for byproducts treatment/disposal.

1.5 BYPRODUCTS MANAGEMENT OPTIONS OVERVIEW

There are several management methods for water treatment byproducts. The management method selected depends upon the water treatment practices and the byproduct characteristics. Management methods should be thoroughly evaluated to minimize the possibility of generating hazardous or low-level radioactive residuals. Hazardous and low-level radioactive wastes must be managed in accordance with existing regulations. Methods for management of the byproducts produced from water treatment facilities include the following options:

- Gravity Thickening
- Chemical Precipitation
- Mechanical Dewatering
- Nonmechanical Dewatering
- Evaporation Ponds
- POTW Discharge
- Direct Discharge
- Land Application
- Nonhazardous Waste Landfill
- Hazardous Waste Landfill
- Radioactive Waste Disposal

Management options applicable to sludges and slurries include 1) mechanical dewatering, 2) nonmechanical dewatering, 3) land application, 4) hazardous waste landfill, and 5) nonhazardous waste landfill. Management options applicable to brines include 1) POTW discharge, 2) chemical precipitation, 3) direct discharge, and 4) evaporation ponds.
In addition to the waste management options discussed above, deep well injection is a viable disposal method for slurries and brines. Cost estimates for deep well injection are not included in this document, however [illegible]

[illegible] ted [illegible] assu[illegible] [illegible]ard[illegible] these parameter[illegible]

Radioactive waste management receives only limited discussion in this document. EPA has developed draft guidance relating to these wastes entitled "Suggested Guidelines for the Disposal of Drinking Water Wastes Containing Naturally Occurring Radionuclides." The guidelines will be finalized when drinking water regulations for radionuclides are promulgated.

2.0 BYPRODUCT CHARACTERIZATION

2.1 INTRODUCTION

Water byproducts, or the waste streams generated during the treatment of water to obtain drinking water, consist of sludges, slurries, brines, and filter backwash. Whereas the sludges, slurries, and brines are, for this study, considered treated directly by one or more of the technologies presented in Sections 5.0 through 14.0, filter backwash may require pretreatment. For these cases, it is assumed that filter backwash is pretreated by gravity thickening, which is presented in Section 4.0. Following this pretreatment, the sludge from the thickener is then treated by one of the technologies presented in Sections 5.0 through 14.0 and the decant is either recycled to the head of the water treatment plant or is direct discharged.

For this study, these byproducts are assumed to be generated from four water treatment technologies: chemical coagulation and filtration, lime softening, ion exchange, and reverse osmosis. Although this cost analysis focuses on byproduct volumes and characteristics generated by these four technologies, the costs presented in this document are applicable to byproducts from other water treatment processes that produce similar residuals.

In general, the volume of byproducts generated is dependent on the quality of feed water, the efficiency of the treatment system, the water usage rate, the amount of chemicals used, and the water treatment technology employed. The volume also can vary seasonally or monthly; variations are not unusual for different months of the year. To estimate the byproducts generated on a national basis, assumptions regarding these parameters are made and described in the following paragraphs which address each water treatment technology.

2.2 CHEMICAL COAGULATION AND FILTRATION

Chemical coagulation and filtration is frequently applied to surface waters to remove organic matter and to pretreat hard-to-remove substances such as taste and odor compounds and color. The most common chemical coagulant used is alum.

Based on actual facility data, alum sludge generation quantities range from 0.001 to 0.37 percent of the treated water flow rate with an average of 0.11 percent (Ref. 1). The alum sludge volumes for each design flow category are summarized in Table 2. The solids concentration of this sludge ranges from 0.5 to 3 percent.

TABLE 2

CHEMICAL COAGULATION SLUDGE VOLUMES

Water Treatment Plant Flow (mgd)	Typical Flow Range (gal/day)	Typical Volume (gal/day)
0.7	7–2,600	770
1.8	18–6,700	2,000
4.8	48–17,800	5,300
11	110–40,900	12,100
18	180–66,800	19,800
26	260–96,600	28,600
51	510–189,400	56,200
210	2,100–779,900	231,300
430	4,300–1,596,900	473,500

From this analysis, the volume of chemical coagulation sludge generated ranges from 7 to 1,600,000 gallons of sludge per day depending on the water treatment plant capacity.

The following equation can be used to estimate the amount of sludge produced in an alum coagulation plant to remove turbidity based on specific feed water characteristics (Ref 2).

$$S = 8.34\ Q\ (0.44\ Al + SS + A)$$

Where:
- S = sludge produced in pounds per day
- Q = plant flow in million gallons per day
- Al = Alum dose in milligrams per liter
- SS = raw water suspended solids in milligrams per liter
- A = additional chemicals added such as polymer, clay, or activated carbon in milligrams per liter

Since most water treatment plants do not routinely measure suspended solids, turbidity is often used to estimate suspended solids. The relationship between turbidity and suspended solids can be represented by the following equation:

$$SS = b\ Tu$$

Where:
- SS = raw water suspended solids in milligrams per liter
- b = factor determined based on characteristics of raw water, typically 0.7 to 2.2
- Tu = turbidity

This correlation should be determined for a specific water treatment plant over a period of time since turbidity can vary seasonally for the same water supply.

The filter backwash volume from chemical coagulation and filtration depends upon the number of filters and frequency and duration of each backwash event. The volume generated ranges from 0.5 to 5 percent of the treated water. In general, large treatment plants will generate a lower percentage of filter backwash than small treatment plants because they tend to operate more efficiently.

2.3 LIME SOFTENING

Lime softening is the precipitation of calcium, magnesium, and other cations from water using lime and soda ash. Calcium and magnesium are the primary ions which contribute to water hardness and for the purposes of this document, it is assumed that lime softening is used specifically to remove calcium carbonate and magnesium bicarbonate hardness. It is also assumed that lime softening is performed only on ground water; however, in some regions of the country, river water also may require softening.

The costs for treating/disposing of lime softening sludges, in general, do not include the two largest design flow categories (210 and 430 MGD). It was assumed that a municipality with these water demands may utilize a ground water source for a portion of their demand; however, it is unlikely that its entire demand would be supplied by ground water.

The quantity of lime softening sludge ranges from 0.4 to 1.5 percent of the design flow rate, with an average of 1.2 percent. The lime sludge volumes for each treated water design flow are summarized in Table 3. The initial solids concentration of this sludge ranges from 2.4 to greater than 25 percent with the majority of facilities having a solids concentration of 2.4 percent.

The volume of sludge generated from lime treatment facilities ranges from 2,800 to 6,600,000 gallons per day depending on the water treatment plant capacity.

The filter backwash volume from lime softening depends on the number of filters and frequency and duration of each backwash event. The volume generated ranges from 0.5 to 5 percent of the treated water. In general, large treatment plants will generate a lower percentage of filter backwash than small treatment plants because they tend to operate more efficiently.

TABLE 3

LIME SOFTENING SLUDGE VOLUMES

Water Treatment Plant Flow (mgd)	Typical Volume Range (gal/day)	Typical Volume (gal/day)
0.7	2,800–10,700	8,500
1.8	7,200–27,400	21,900
4.8	19,300–73,100	58,300
11	44,200–167,500	133,600
18	72,300–274,100	218,600
26	104,400–395,900	315,800
51	204,800–776,600	619,400
210	843,400–3,198,000	2,550,600
430	1,726,900–6,548,200	5,222,700

2.4 ION EXCHANGE

Ion exchange processes are used to soften water and remove impurities. Ion exchange systems can be used to remove cations (e.g., calcium and magnesium) or anions (e.g., chloride). Brines are produced from rinsing, regenerating, and backwashing the ion exchange unit. Of these three byproducts streams, the regeneration stream contains the highest levels of total dissolved solids (TDS) ranging from 10 to 300 times the levels found in the feed water. The range of the average TDS from ion exchange brines is 15,000 to 35,000 milligrams per liter (mg/l) (Ref. 2). This high TDS content is the result of the salts removed from the exchange resin during regeneration as well as excess regeneration salts.

By mixing the regeneration stream with the rinse and backwash streams, dilution by approximately an order of magnitude can be achieved.

The byproduct quantities (brines) from ion exchange range from 1.5 to 10 percent of the treated water depending on the hardness of the feed water and the type of ion exchange unit used. In general, for every kilogram of hardness removed, approximately 3 to 15 gallons of brine are produced (Ref. 2). Operating data from six operating ion exchange water treatment plants indicate that the volume of brine generated ranges from 17 to 83 gallons per 1000 gallons water processed (Ref. 2). Brine volumes are calculated assuming that these brine generation rates are applicable to large treatment systems. The resultant brine generation rates are provided in Table 4.

TABLE 4

ION EXCHANGE BRINE VOLUMES

Water Treatment Plant Flow (mgd)	Typical Volume Range (gal/day)	Typical Volume (gal/day)
0.7	12,300–63,200	12,300
1.8	31,500–162,500	31,500
4.8	84,000–433,300	84,000
11	192,500–993,000	192,500
18	315,000–1,624,900	315,000
26	455,000–2,347,100	455,000
51	892,600–4,604,000	892,600
210	3,675,200–18,957,700	3,675,200
430	7,525,400–38,818,100	7,525,400

The volume of brine produced from ion exchange facilities ranges from approximately 12,000 to 38,900,000 gallons per day depending on the water treatment capacity, the quality of the untreated water, and the type of ion exchange system used.

2.5 REVERSE OSMOSIS

Reverse osmosis processes use a semi-permeable membrane that allows water to pass through it while restricting the passage of dissolved, colloidal, and particulate matter. The byproducts stream contains the salts and other materials rejected by the membrane. The byproduct stream has a high TDS concentration. Concentrations of specific contaminants in the byproducts stream may range from 2 to 9 times the concentration in the feed water (Ref. 3). For the facility sizes being considered in this analysis, the volume of reject water or brines produced from backwashing the membrane are typically 15 to 20 percent of the feed flow with TDS concentrations 3 to 4 times higher than the concentration of the feed water (Ref. 3). The percentage of reject water produced decreases as the size of the water systems increase due to increased efficiencies. For the purposes of estimating brine generation from reverse osmosis water treatment plants, the volume of reject water is assumed to range from 15 to 20 percent of the feed water. The brine volumes are presented in Table 5.

The volume of brine produced from a reverse osmosis facility ranges from 123,500 to 107,500,000 gallons per day depending on the water treatment plant capacity, initial water quality, and efficiency of the membrane.

2.6 BYPRODUCT DENSITIES

The densities of the byproduct streams from the water treatment technologies considered in this analysis are, in general, dependent on the solids concentration. In general, the brines resulting from reverse osmosis and ion exchange, although high in total dissolved solids, have

TABLE 5

REVERSE OSMOSIS BRINE VOLUMES

Water Treatment Plant Flow (mgd)	Typical Flow Range (gal/day)	Typical Volume (gal/day)
0.7	123,500–175,000	175,000
1.8	317,600–450,000	450,000
4.8	847,100–1,200,000	1,200,000
11	1,941,200–2,750,000	1,941,200
18	3,176,500–4,500,000	3,176,500
26	4,588,200–6,500,000	4,588,200
51	9,000,000–12,750,000	9,000,000
210	37,058,800–52,500,000	37,058,800
430	75,882,400–107,500,000	75,882,400

a solids concentration of less than one percent. Therefore, the brine density is assumed to be that of water or 62.43 pounds per cubic feet (lb/ft^3).

The density of the sludges generated from lime softening and chemical coagulation are more variable and are dependent primarily on the solids concentration or moisture content. The sludge density is assumed to range from 64 to 74 lb/ft^3 (Ref. 4). If the solids content of a specific byproducts stream is known, the sludge density can be calculated from the following equation (Ref. 3):

$$\text{Density} = \frac{100}{\dfrac{\text{percent solids}}{\text{density solids}} + \dfrac{\text{100-percent solids}}{\text{density water}}}$$

This equation is applicable for sludge with a solids concentration of less than 50 percent. A

typical value for the density of the solids in an alum or iron sludge is 145 lb/ft^3 (Ref. 3). Dewatered sludge densities can also be calculated using the equation provided as long as the solids concentration remains below 50 percent. A typical density of a dewatered sludge is assumed to be 100 lb/ft^3 (Ref. 3).

2.7 REFERENCES

1. Robertson, R.F. and Y.T. Lin. "Filter Washwater and Alum Sludge Disposal: A Case Study." Proceedings AWWA Seminar on Water Treatment Waste Disposal Seminar, (June 25, 1978), 4, 1-8.

2. American Water Works Association. Handbook: Water Treatment Plant Waste Management. 1987

3. American Water Works Association. Slib, Schlamm, Sludge. KIWA Ltd., 1990.

4. American Water Works Association. Sludge: Handling and Disposal. Denver, CO: American Water Works Association, 1989.

3.0 COST ASSUMPTIONS

3.1 INTRODUCTION

The costs included in this document are based on a variety of sources including computer cost models, published cost information, and vendor quotes. All costs presented in this document are in 1992 dollars. The cost equations presented in this document should be used for relative comparison purposes only. More accurate site specific cost estimates should be developed for individual facility planning and budgeting purposes. Site specific factors and treatment requirements like physical and chemical characteristics of the residuals, site constraints, operational costs and varying state or local regulatory requirements can all drive up final project costs.

3.2 CAPITAL COST ASSUMPTIONS

Table 6 presents cost factors and unit costs used to calculate the capital costs presented in this document. The land, buildings, and piping components are discussed in detail below. Other capital cost items (e.g., tanks, lagoons, and pumps) were calculated individually.

Land

Land prices vary substantially across the country. Land prices depend on proximity to metropolitan areas, state of land development (i.e., improved or unimproved), current use, and scarcity of land. An cost of $10,000 per acre is assumed for the cost estimates included in this document. Costs for suburban or industrial unimproved land averages $10,000 per acre and ranges from approximately $4,000 to $350,000 per acre depending on location. Costs for unimproved rural land vary from approximately $150 per acre in states with large tracts of

TABLE 6

CAPITAL COST FACTORS AND SELECTED UNIT COSTS

Component	Factor/Unit Cost
Land	$10,000/Acre
Buildings	$33.00/Ft^2
Piping	5% of Installed Equipment*
Pipe Fittings	20% of Piping Costs†
Electrical	1% of Installed Equipment
Instrumentation	1-2% of Installed Equipment
Engineering Fee	15% of Direct Capital
Contingency, Bonding, & Mobilization	20% of Direct Capital
Contractor's Overhead and Profit	12% of Direct Capital

* Piping costs are calculated directly when piping is a significant cost (e.g., for direct discharge).

† Factor is used when piping costs are calculated directly.

undeveloped land to $2,200 per acre in states with small tracts of undeveloped land. An average cost for rural, unimproved land is $1,000 per acre.

Costs for purchasing land are included in the capital cost equation for all treatment and disposal processes that use surface impoundments. For example, an impoundment is used for storage prior to land application. The land costs are presented as a separate cost in the capital cost equation to allow the user to delete the cost for land if no purchase is required or to vary the cost of the land if the unit cost of land for a given area is available. A minimum land purchase of ½ acre is used in developing land costs.

Land costs are not included for direct discharge and POTW discharge. It is assumed that the water treatment authority is able to obtain an easement for placement of a sewer or discharge line.

Buildings

Similar to land costs, building costs vary substantially based on geographic location. The building cost of $33.00 per square foot, listed in Table 6, is taken from 1992 Means Building Construction Cost Data. This cost is for a basic warehouse or storage building and includes electrical, foundations, heating, ventilation, air conditioning, and plumbing. It includes a 10 percent surcharge for structures of less than 25,000 square feet. This cost is the median cost for basic warehouse and storage buildings. The lower quartile cost is $21.30 per square foot and the upper quartile cost is $45.65 per square foot. Different warehouse or building configurations will change this unit cost.

Piping and Pipe Fittings

Piping costs are calculated using two different methodologies depending on the magnitude of the piping costs. For management systems in which the piping constitutes a significant portion of the capital cost (e.g., direct discharge and POTW discharge), piping costs are calculated by sizing individual pipe lengths and determining installation charges. For these management systems, pipe fittings are assumed to be 20 percent of the installed piping costs. For management systems where piping is not a significant cost (e.g., chemical precipitation and mechanical dewatering), piping and pipe fittings are assumed to be 5 percent of the installed equipment costs.

3.3 OPERATION AND MAINTENANCE ASSUMPTIONS

Table 7 presents cost factors and unit costs used to calculate the operation and maintenance costs presented in this document. The labor and supervision rates are discussed below.

TABLE 7

OPERATION AND MAINTENANCE COST
FACTORS AND UNIT COSTS

Component	Factor/Unit Cost
Labor	$28.00/Hour
Supervision	$42.00/Hour
Supervision Factor	10% of Labor Hours
Insurance and General and Administrative Expenses	2% of Direct Capital, Excluding Land and Buildings
Maintenance	2–3% of Direct Capital, Excluding Land and Buildings
Electricity	$0.086/Kilowatt-Hour

Labor

The labor rate is based on a 20-city average for union scale laborers. The hourly rate of $28.00 is based on an average salary of $18.74 per hour including fringe benefits and a 50 percent labor overhead cost. Average salaries, including fringe benefits, by region range from $11.17 per hour in the southeast to $26.23 in the western United States.

Supervision

The supervision rate is based on an estimated salary of $45,000 per year for a water system treatment manager. The $42.00 per hour assumes a 30 percent fringe benefit and a 50 percent labor overhead cost. The supervisor's salary is based on recent job postings in Public Works magazine.

3.4 ANNUAL COST ASSUMPTIONS

Total annual costs are equal to the sum of the yearly operation and maintenance costs plus the

annualized capital costs. Annualized capital costs are calculated based on a 20-year operating life and an interest rate of 10 percent. The capital recovery factor for a 20-year operating life at a 10 percent interest rate is 0.1175. Alternate capital recovery factors can be calculated using the formula presented below.

$$\text{Capital Recovery Factor} = \frac{(1 + i)^N (i)}{(1 + i)^N - 1}$$

Where: i = interest rate
N = number of years

3.5 COST COMPONENTS EXCLUDED

The following cost components are not included in the cost estimates presented in this document. Other excluded costs, specific to each management option, are highlighted under their respective technology cost sections.

Sample Collection and Laboratory Analysis

Costs for sample collection and analysis to determine solids content, free liquids, and toxicity characteristics, and other parameters are not included in the costs presented in this document. Sampling frequency is highly variable. Depending on the byproducts management method selected, sampling requirements could be minimal or extensive.

Permits and Other Regulatory Requirements

Costs for permits and other regulatory requirements are not included in this analysis. Requirements vary from state to state for a given management option. Permitting costs will vary based on the size and complexity of a unit and the local governing jurisdiction.

Management methods that may require permits include landfills, land application, evaporation ponds, and storage lagoons. In addition, generators of hazardous waste are required to comply with RCRA generator requirements (40 CFR Part 262).

Mechanical Backup

Costs for equipment backup, or redundancy, are not included in these cost estimates.

3.6 COST EQUATIONS

The cost equations for the capital components and for operation and maintenance were developed by estimating the costs for different byproduct flow rates. Equipment sizes, retention times, installed equipment costs, operational maintenance expenses, commercial disposal fees, component cost factors, and unit costs were developed using published literature, supplemented with vendor contacts and application of best engineering judgement. A list of references and vendor contacts used to compile technical and cost-related information is presented in Section 15.0. Capacities for major equipment components are presented in each cost chapter. Each cost equation encompasses the range of expected byproduct flow rates unless a specific technology is not applicable to the entire range. For example, some technologies are not feasible for very high flow rates due to excessive land requirements or equipment limitations.

The limits of the cost equations presented for each byproduct management method may be extended slightly beyond the limits presented in this document. The upper or lower end for some equations, however, may represent the largest or smallest practical limit of a specific technology. Therefore, the technology limitations and design assumptions should be carefully reviewed prior to extending the range of the equations. Best engineering judgement should be used when extending the equations beyond their specified limits.

The capital and operation and maintenance equations encompass the water byproduct volumes generated by both the design flow rates and the average operating flow rates for Category 5 through 12 water treatment plants. The user may want to size the equipment (i.e., determine the capital cost) for the byproducts produced from the water treatment system design flow rate, while calculating the operating cost using the average byproduct flow rate. Thus, the equipment is sized for peak flow periods, but the actual operating costs may be more closely estimated using an average daily flow rate. Typically, the design flow rate for the water treatment system may be two to three times the average flow rate for the water treatment facility. When calculating the costs for capital intensive management technologies such as chemical precipitation and mechanical dewatering, the user may want to calculate both the capital and operation and maintenance costs using the average flow rate. Table 8 indicates whether the water treatment design flow rate or average flow rate should be used to calculate the capital and operation and maintenance costs. The user of this document may always use the design flow rate to calculate costs, but this may result in substantial over estimation of the cost to treat water byproducts generated by an actual facility.

All costs presented in this chapter are in 1992 dollars. To update cost results obtained from the cost equations specified in the following sections, *Builders' Construction Cost Indexes* may be used and are available in quarterly, "cost report" issues of *Engineering News Record (ENR)*. The ENR 20-city construction cost index or the *Means Construction Cost Index* are useful general-purpose cost updating indexes. Their January 1992 values are 455.08 and 97.90, respectively.

3.7 CALCULATING BYPRODUCT MANAGEMENT COSTS

Byproduct management costs are calculated using the cost equations presented in the following chapters. Known byproduct flow rates from an operating facility may be used or approximate byproduct volumes can be estimated using the information presented in Sections 2.3 through 2.6. Figures 3 and 4 present management options applicable to brines and sludges/slurries,

TABLE 8

TREATMENT SYSTEM SIZING

Technology	Capital Cost	Operation & Maintenance Cost
Gravity Thickening	Average	Average
Chemical Precipitation	Average	Average
Mechanical Dewatering	Average	Average
Non-mechanical Dewatering	Design	Average
Evaporation Ponds	Design	Average
POTW Discharge	Design	Average
Direct Discharge	Design	Average
French Drain	Design	Average
Land Application	Design	Average
Non-Hazardous Waste Disposal	Average	Average
Hazardous Waste Disposal	NA	NA
Radioactive Waste Disposal	NA	NA

respectively. These figures present complete management trains. That is, they depict byproduct management methods, resulting residuals, and management options for the residuals. Individual cost chapters present residual factors to use to determine residual volumes that require further treatment or disposal. The annual byproduct management costs can be determined by calculating a total annual cost (i.e. annualized capital plus operating and maintenance) for each required treatment or disposal technology and then summing the costs associated with all water treatment byproduct and residual management processes at the facility.

Figure 3

BRINE TREATMENT AND DISPOSAL OPTIONS

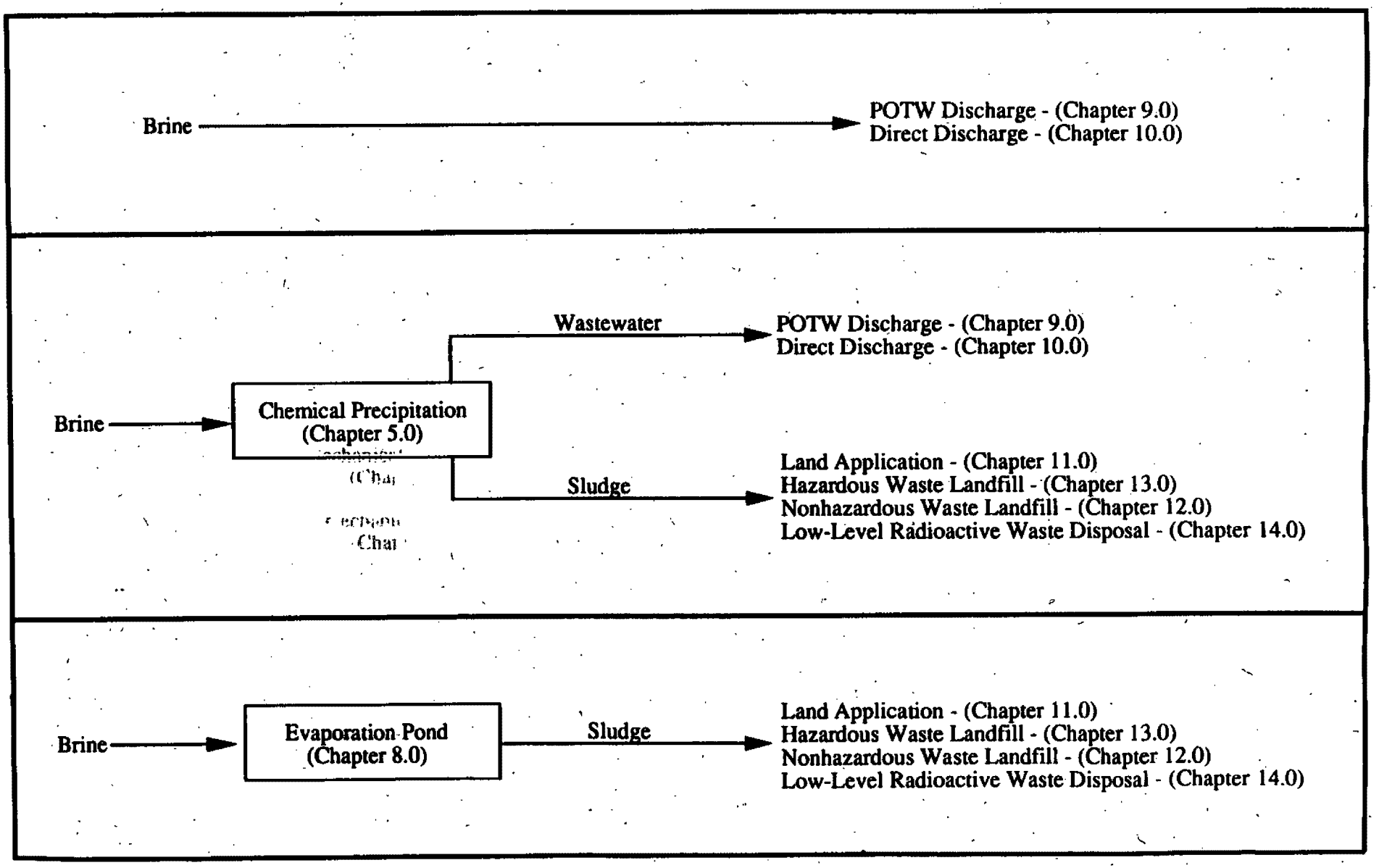

Figure 4

SLUDGE/SLURRY TREATMENT AND DISPOSAL OPTIONS

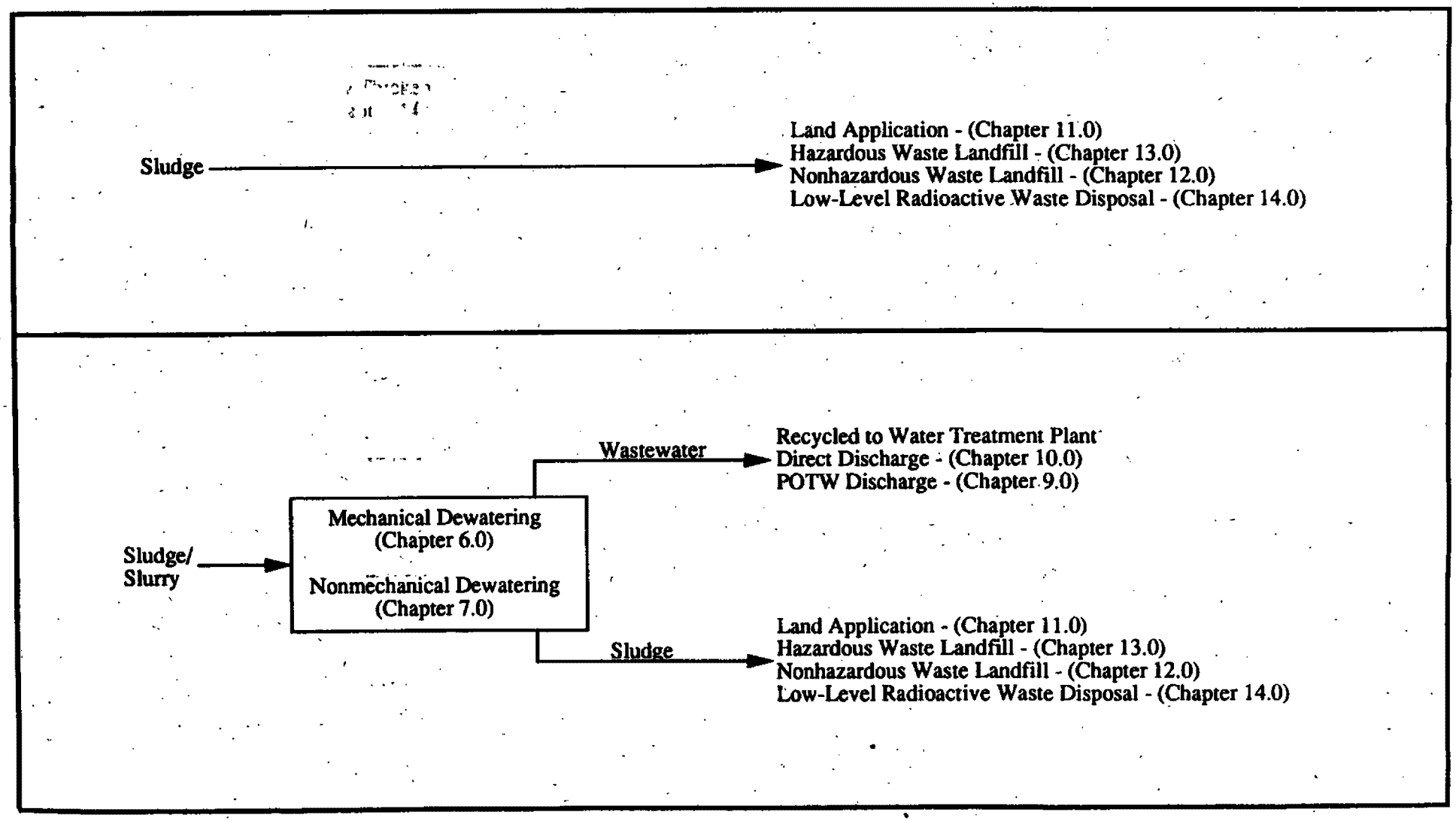

Figure 4

SLUDGE/SLURRY TREATMENT AND DISPOSAL OPTIONS (continued)

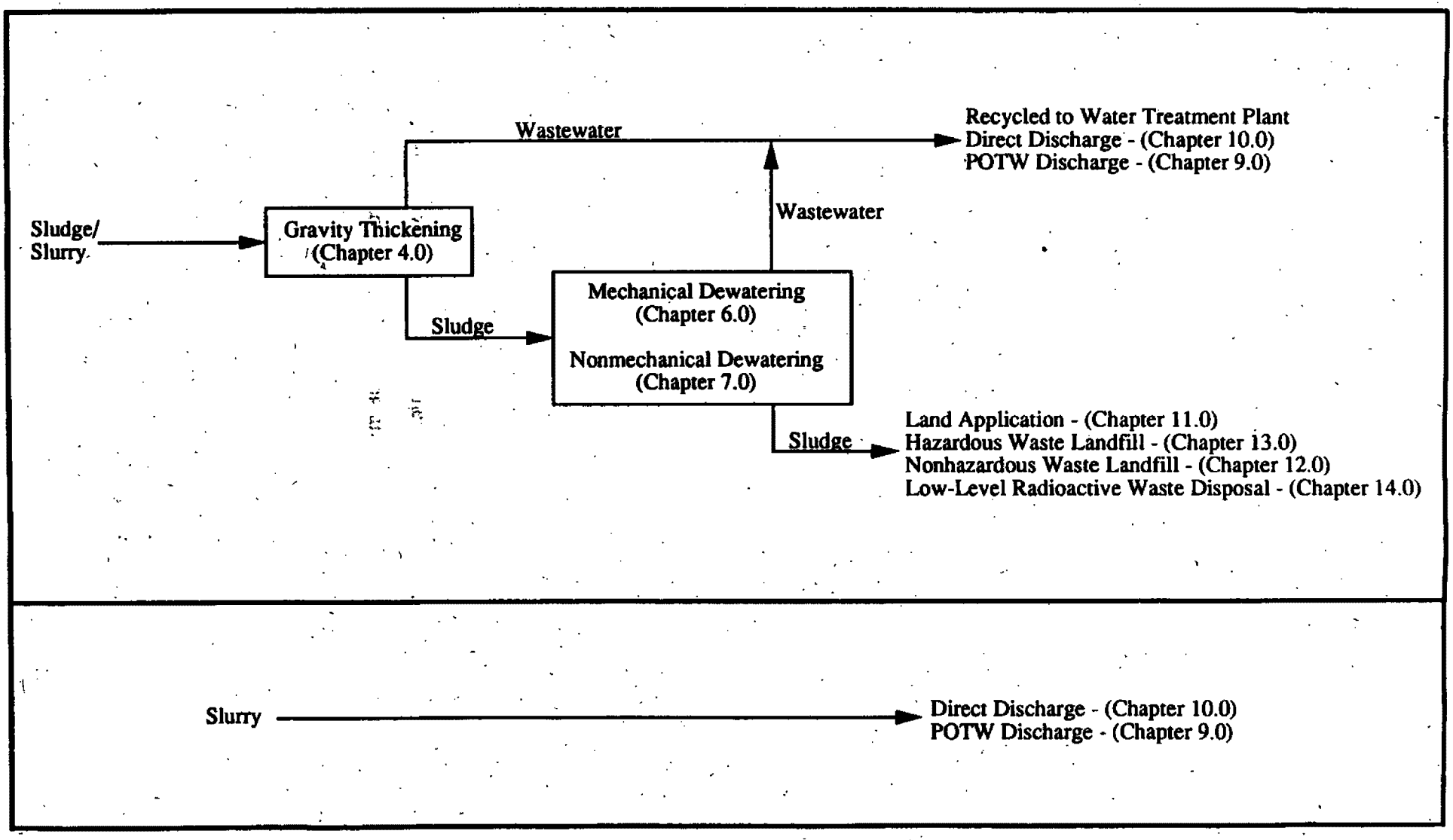

4.0 GRAVITY THICKENING

4.1 TECHNOLOGY DESCRIPTION

In this report, gravity thickening is a treatment technology considered for filter backwash and sludge. Gravity thickening serves to increase the solids concentration of these waste streams so they are treatable by one of the technologies addressed in the following sections. Even though both filter backwash and sludges are applicable to gravity thickening, filter backwash is presented in more detail in this section.

Filter backwash byproducts are high volume, low solids slurries generated during the cleaning of water treatment plant filters. The volume of backwash waters generated varies for individual treatment plants and depends upon the number of filters and the frequency and duration of each backwash event. The total backwash volume is comprised of upflow backwash, downflow regeneration, and downflow rinse. In general, backwash volumes range from 0.5 to 5.0 percent of the treated water with the larger treatment plants producing less backwash per million gallons of treated water than smaller treatment plants due to increased plant efficiency.

Where practical, backwash waters are recycled to the head of the treatment works for management. Recycling serves two purposes: it reduces the quantity of treated water lost to backwashing and it reduces the total volume of sludge generated. In cases where backwash recycling is not possible, discharge to a surface water, publicly-owned treatment works (POTW), or treatment by nonmechanical and mechanical dewatering are other treatment and disposal options.

In cases where backwash byproducts cannot be recirculated to the head of the plant or discharged to a surface water or POTW, the backwash waters must be disposed as a water

treatment slurry. Backwash waters are chemically similar to sludges produced by chemical coagulation, but are more dilute. Backwash waters have an average solids concentration of 0.08 percent, where chemical coagulation (alum) sludge have a solids concentration ranging from 0.5 to 2.0 percent.

Backwash water and sludges is gravity-fed to a tank where gravity thickening is performed. Gravity thickening occurs by allowing suspended solids to naturally settle. The sludge discharged from the tank is routed for further treatment and the decant is either direct discharged or recycled to the head of the treatment plant.

4.2 TECHNOLOGY APPLICABILITY AND LIMITATIONS

Gravity thickening is applicable to the filter backwash streams and chemical coagulation or lime softening byproducts streams and/or their sludge waste streams. Because of the high volumes and low solids concentrations characteristic of the backwash stream, pretreatment is necessary before the byproducts can be dewatered by the methods discussed in the remainder of this report. Often sludges can be managed either with or without pretreatment depending on the initial sludge characteristics (e.g. solids concentration), however, pretreatment may also be necessary to equalize flow rates.

4.3 COST COMPONENTS

The following section presents the design assumptions, capital components, and the operation and maintenance components used to prepare the costs for this technology.

4.3.1 Design Assumptions

- Gravity thickening is used to pretreat filter backwash or sludges from chemical coagulation and lime softening.

- The waste streams flow by gravity from the treatment plant to settling tank.
- The backwash volume ranges from 7,000 to 2,500,000 gallons per day.
- The total backwash volume is 0.5 to 2 percent of the design flow rate.
- The initial solids concentration of the backwash is 0.1 percent and the discharge concentration is equal to 1 percent.
- The backwash is thickened in a tank.
- The volume of backwash is reduced by 90 percent.
- The supernatant is pumped to the head of the treatment plant.
- The thickened sludges are discharged to another treatment for further dewatering.

4.3.2 Capital Cost Components

The capital components for each gravity thickening system consist of the following items:

- Holding tank;
- Piping and fittings;
- Pump;
- Trenching;
- Electrical; and
- Instrumentation.

Table 9 indicates the holding tank capacities used to develop the capital cost equation for gravity thickening.

4.3.3 Operation and Maintenance Components

The operation and maintenance components for each gravity thickening system include the following items:

- Electricity;
- Labor and supervision;
- Maintenance labor and materials; and
- Insurance and general and administration.

TABLE 9

GRAVITY THICKENING

Waste Stream Volume (gal/day)	Number of Tanks	Waste Stream Settling Tank Capacity (gal)
7,000	1	30,000
13,300	1	50,000
36,000	1	30,000
96,000	1	30,000
165,000	1	50,000
270,000	1	50,000
510,000	1	50,000
1,050,000	2	50,000
2,150,000	2	50,000

4.3.4 Cost Components Excluded

The following cost component is not included in the cost equations for gravity thickening systems:

- Supernatant disposal, if the supernatant cannot be pumped to the head of the treatment plant; and
- Thickened sludge disposal.

Costs for supernatant disposal, if the supernatant cannot be pumped to the head of the treatment plant, and treatment of the thickened sludge can be determined using other sections of this document.

4.4 GRAVITY THICKENING COST EQUATIONS

The cost equations for the capital components and operation and maintenance components were developed by estimating the costs for nine different filter backwash flow rates. The filter backwash and sludge flow rates (X) used in the equations below are the average daily volumes generated (e.g. for filter backwash, 2.5 percent of the daily treated water flow rate). The capital cost equation calculates the total capital cost (i.e., installed capital plus indirect capital costs). The total annual cost is calculated based on the capital and operation and maintenance costs obtained using the equations presented below.

Capital Costs

$$Y = 32{,}400 + 41.7\,X^{0.50}$$

Where: Y = $
X = gallons of filter backwash/sludge per day

Range: 7,000 gpd $\leq X \leq$ 270,000 gpd

$$Y = 21{,}700 + 66.5\,X^{0.50}$$

Where: Y = $
X = gallons of filter backwash/sludge per day

Range: 270,000 gpd $< X \leq$ 2,500,000 gpd

Operation and Maintenance

$$Y = 5{,}800 + 8.04\,X^{0.50}$$

Where: Y = $/year
X = gallons of filter backwash/sludge per day

Range: 7,000 gpd $\leq X \leq$ 2,500,000 gpd

Total Annual Cost

$$Y = [CAP \times CRF] + O\&M$$

Where: Y = $/year
CAP = capital cost
CRF = capital recovery factor (e.g., 0.1175)
O&M = operation and maintenance cost

5.0 CHEMICAL PRECIPITATION

5.1 TECHNOLOGY DESCRIPTION

Chemical precipitation is applicable to aqueous byproduct streams such as ion exchange backwash and reverse osmosis brines. Chemical precipitation is frequently used to remove dissolved metals from aqueous solutions. It can be used to remove metal ions such as aluminum, antimony, arsenic, cadmium, chromium, copper, iron, lead, mercury, selenium, silver, thallium, and zinc. Hydroxide precipitation is the most widely used technology for removing trace metals from wastewaters. Lime, quicklime, soda ash, or caustic soda are commonly used as sources of hydroxide ions. Under suitable conditions, metals form insoluble metal hydroxides which can be separated from solution by clarification and filtration. Sulfide precipitation and ferrous salt precipitation also are used depending on the metals present in solution.

The precipitation process involves adding a precipitant, such as hydroxide ions, to ion exchange or reverse osmosis brines in a stirred reactor vessel. The dissolved metals are converted to an insoluble form by a chemical reaction between the soluble metal ions and the precipitant. The resulting suspended solids are separated from the aqueous phase in a clarifier. Flocculation with or without a chemical coagulant or settling aid may be used to enhance the removal of suspended solids. The supernatant from the clarifier is either discharged to the sanitary sewer, to surface water or to the head of the treatment plant depending on the pH. Prior to disposal, the clarifier sludge may require additional dewatering by mechanical or nonmechanical means.

5.2 TECHNOLOGY APPLICABILITY

Chemical precipitation is used primarily for treatment of reverse osmosis and cation exchange

waste brines. Chemical precipitation is used to remove the high levels of dissolved solids found in these waste streams where less expensive treatment and disposal options are not available.

The chemical precipitation method of treating ion exchange and reverse osmosis brines is an expensive waste treatment/disposal option relative to options such as evaporation ponds, sanitary sewer discharge, and direct discharge. Chemical precipitation is economically more feasible for large systems treating more than 1 million gallons of water byproducts per day. If chemical precipitation is the only method available for ion exchange and reverse osmosis byproduct treatment, then ion exchange or reverse osmosis may require consideration of off-site disposal options.

5.3 TECHNOLOGY LIMITATIONS

Anion exchange wastes cannot be treated by lime precipitation because the sodium, chloride and sulfate dissolved ions are not readily precipitated by lime. In addition, the effluent from the chemical precipitation process may still pose a disposal concern due to elevated levels of dissolved solids such as sodium, chloride, and sulfate remaining in the effluent.

As mentioned above, chemical precipitation may be a relatively expensive treatment option compared to direct discharge, sanitary sewer discharge, and evaporation ponds. Chemical precipitation has higher capital costs and higher labor costs than many other byproduct treatment and disposal options. The higher labor costs are associated with the oversight necessary for proper operation of the system.

5.4 COST COMPONENTS

The following section presents the design assumptions, capital components, and the operation and maintenance components used to prepare the costs for this technology.

5.4.1 Design Assumptions

- The chemical precipitation system consists of mixing and holding tanks for the lime solution, a precipitation tank, a clarifier, agitators, and pumps.
- The precipitation tank has a ½-hour retention time and a 5 percent overdesign.
- The clarifier (settling tank) has a 1- to 2-hour retention time.
- Waste brines flow to the treatment system under pressure from the ion exchange or reverse osmosis system.
- The chemical precipitation equipment is located in the water treatment building.
- Sludge from the clarifier may require additional dewatering prior to disposal.
- The sludge volumes generated by chemical precipitation are 5 and 2 percent of the influent volumes for reverse osmosis and ion exchange brines, respectively.

5.4.2 Capital Components

The capital components for each chemical precipitation system consist of the following items:

- Carbon steel mixing tank;
- Carbon steel holding tank;
- Carbon steel precipitation tank;
- Clarifier;
- Agitators;
- Sludge pumps;
- Building;
- Piping;
- Electrical; and
- Instrumentation.

Table 10 indicates the brine volumes, tank capacities, and clarifier capacities used to develop the capital cost equation for chemical precipitation.

TABLE 10

CHEMICAL PRECIPITATION

Byproduct Flow Rate (gal/day)	Precipitation Tank Size (gallons)	Mix Tank Capacity (gallons)	Clarifier Capacity (gallons)
27,400	650	50	2,500
67,500	2,000	75	8,000
274,000	6,000	200	24,000
500,000	12,000	600	40,000
1,000,000	23,000	1,200	50,000
2,740,000	60,000	1,500	40,000 x 2

5.4.3 Operation and Maintenance Components

The operation and maintenance components for each chemical precipitation system include the following items:

- Lime;
- Electricity;
- Labor;
- Maintenance labor and materials;
- Insurance and general and administration; and
- Water.

5.4.4 Cost Components Excluded

The following cost components are not included in the cost equations for chemical precipitation systems since they are accounted for elsewhere in the document:

- Sludge dewatering (if needed for the selected disposal option);
- Sludge disposal; and
- Clarifier overflow disposal, if the overflow cannot be pumped to the head of the treatment works.

Costs for sludge dewatering and sludge disposal techniques are included in other sections of this document. Costs for clarifier overflow disposal, if the overflow cannot be pumped to the head of the treatment works, can be determined using other sections of this document.

5.5 COST EQUATIONS

The cost equations for the capital components and operation and maintenance components were developed by estimating the costs for six different brine flow rates. The capital cost equation calculates the total capital cost (i.e., installed capital plus indirect capital costs). Equipment costs and building costs are separate components in the capital cost equation to enable the user to exclude the cost for a building addition if it is not necessary. The total annual cost is calculated based on the capital and operation and maintenance costs obtained using the equations presented below.

Capital Costs

$$Y = [34{,}600 + 206\,X^{0.50}] + [110\,X^{0.55}]$$

$$Y = [\text{Equipment Cost}] + [\text{Building Cost}]$$

Where: $Y = \$$
X = gallons of brine per day

Range: $25{,}000 \text{ gpd} \le X \le 500{,}000 \text{ gpd}$

$$Y = [34{,}600 + 206\,X^{0.50}] + [65{,}000 + 160\,X^{0.50}]$$

$$Y = [\text{Equipment Cost}] + [\text{Building Cost}]$$

Where: $Y = \$$
X = gallons of brine per day

Range: $500{,}000 \text{ gpd} < X \le 3{,}000{,}000 \text{ gpd}$

Operation and Maintenance

$$Y = 37{,}300 + 0.17\,X$$

Where: Y = \$/year
X = gallons of brine per day

Range: $25{,}000 \text{ gpd} \le X \le 500{,}000 \text{ gpd}$

$$Y = 57{,}500 + 0.13\,X$$

Where: Y = \$/year
X = gallons of brine per day

Range: $500{,}000 \text{ gpd} < X \le 3{,}000{,}000 \text{ gpd}$

Total Annual Cost

$$Y = [CAP \times CRF] + O\&M$$

Where: Y = \$/year
CAP = capital cost
CRF = capital recovery factor (e.g., 0.1175)
O&M = operation and maintenance cost

[illegible] ple filter plates on metal [illegible] of a press depends [illegible] and [illegible] the plates and on the depth of the [illegible] en the [illegible]

6.0 MECHANICAL DEWATERING

Mechanical dewatering processes include centrifuges, vacuum-assisted dewatering beds, belt filter presses, and plate and frame filter presses. Mechanical dewatering processes have relatively high capital and operation and maintenance costs compared to similarly sized nonmechanical processes. Mechanical dewatering is not applicable to very small water plants due to the high capital costs associated with these technologies and limited equipment sizes available. Two mechanical dewatering processes are included in this section: a pressure filter press and a scroll centrifuge.

6.1 PRESSURE FILTER PRESS DESCRIPTION

A pressure filter, or plate and frame, press is a mechanical sludge dewatering method using a positive pressure differential to separate free liquid from the sludge. Pressure filter presses operate as batch processes. The press consists of adjacent plates that form a leak-proof seal when electrically or hydraulically brought together. A positive displacement pump moves sludge into chambers between the two plates. Initially a pump supplies a high volume of sludge to the chamber at a low pressure. As the chamber fills, the pump creates positive pressure on the sludge which forces the liquid from the sludge. The pressure increases until the desired solids concentration is achieved. After pumping ceases, the plates are separated and the sludge cake is dropped into a container or onto a conveyor.

Pressure filter presses consist of multiple filter plates on metal frames. The capacity of a press depends on the number and size of the plates and on the depth of the chamber between the plates. Plates are available in a variety of sizes, shapes, and materials. The choice of filter media adds additional variation to the performance of an individual press. Filter media varies in its particle retaining size, permeability, durability, and its ease of cake release. Sludge type and the initial solids concentration of a sludge affect the filter media choice.

6.2 TECHNOLOGY APPLICABILITY

With proper sludge conditioning, pressure filter presses can effectively dewater both lime and alum sludges. Lime sludges attain final solids concentrations of 40 to 70 percent while alum sludges attain 35 to 50 percent final solids concentrations. Dewatering with a filter press is a batch process; each batch remains under pressure until the desired solids concentration is achieved. This produces a consistent end product. Filter presses produce a filtrate that has a lower suspended solids concentration than filtrates from other mechanical dewatering methods.

Pressure filter presses have been used in water treatment and industrial processes for many years. Use of pressure filters presses in the water treatment industry has been increasing in the last several years. They are especially applicable for facilities that want to achieve a high sludge solids content. The high solids content achieved by pressure filter presses makes this a suitable technique to dewater sludges prior to landfill.

Plate and frame filter presses have low land requirements, high capital costs, and are labor intensive. They typically have higher capital and operating costs than comparable nonmechanical dewatering alternatives. The high labor and capital requirements make them more applicable to larger water systems.

6.3 TECHNOLOGY LIMITATIONS

Although the suspended solids concentration of the filtrate is low, filtrate disposal may be a problem. Proper pre-conditioning of alum sludges prior to filter press dewatering normally requires the addition of lime. Lime is used to lower the alum sludge's resistance to filtration. A lime mixture is added to the alum sludge until a pH of approximately 11 is achieved. The lime conditioning not only increases the total sludge volume (by as much as 20 to 30 percent by weight), but also increases the pH of the resulting filtrate. The final filtrate pH may be too high for sanitary sewer disposal or for recirculation to the head of the treatment plant.

Pumps that deliver the sludge to the filter press must be capable of operating under a wide variety of conditions. During initial pumping, sludge flow rates are high and pressures are low. Toward the end of the cycle, the sludge flow rate is almost zero while pressures range from 100 to 200 psi. A positive displacement pump such as a progressive cavity pump must be used to achieve required flow rates and pressures. A second alternative is to use two pumps: one to deliver high flow rates at low pressure and a second to deliver high pressure with low flow rates.

Filter media must be cleaned every eight to ten cycles to ensure proper operation. Filter cleaning is a time consuming process requiring an acid wash to dissolve built up calcium carbonate from press plates. The acid wash presents disposal problems due to its low pH. Pre-coating the press reduces blinding and frequency of cleaning, but adds to operation and maintenance costs and potentially adds trace metals to the filtrate.

As with all mechanical dewatering methods, proper pre-conditioning of alum sludges is essential to ensure efficient sludge dewatering. Sufficient quantities of lime must be added and a 20 to 30-minute contact time is required to develop the necessary dewatering qualities.

6.4 PRESSURE FILTER PRESS COST COMPONENTS

The following section presents the design assumptions, capital components, and the operation and maintenance components used to prepare the costs for this technology.

6.4.1 Design Assumptions

- Pressure filter presses are effective for sludge flow rates greater than 100 gallons per day.

- The polymer feed system consists of a polymer storage tank, a polymer pump, a polymer/sludge contact tank, and a 20- to 30-minute holding tank.

- A positive displacement pump delivers sludge to the filter press.

- The filter press operates on a batch basis.

- Filtrate collects in a filtrate holding tank before being pumped to the head of the treatment plant.

- In the smaller systems, filter cake collects in a small, wheeled container, which is emptied into a larger solids bin as necessary.

- In the larger systems, the filter cake drops into roll-off bins located beneath the filter press.

- Accumulated solids require disposal on a periodic basis.

- The dewatered sludge volume is 0.03 and 10 percent of the initial volume for alum and lime sludges, respectively.

6.4.2 Capital Components

The capital components for each pressure filter press system consist of the following items:

- Schedule 40 steel piping;
- Polymer feed system;
- Positive displacement pump(s);
- Pressure filter press(es);
- Steel filtrate tank and pump;
- Filter cake storage bin;
- Building;
- Piping;
- Electrical; and
- Instrumentation.

Table 11 indicates the sludge volumes, settling tank/gravity thickener capacities, and filter press capacities used to develop the capital cost equation for pressure filter presses.

6.4.3 Operation and Maintenance Components

The operation and maintenance components for each pressure filter press system include the following items:

- Electricity;
- Polymer;

TABLE 11

PRESSURE FILTER PRESSES

Sludge Flow Rate (gal/day)	Filter Press Capacity (cu. ft.)
500	2.0
2,000	10
5,000	24
50,000	50
250,000	130 x 2
600,000	160 x 3

- Labor;
- Maintenance labor and materials; and
- Insurance and general and administration.

6.4.4 Cost Components Excluded

The following cost components are not included in the cost equations for pressure filter press systems:

- Dewatered sludge disposal;
- Filtrate disposal, if the filtrate cannot be pumped to the head of the treatment plant; and
- Acid wash system, if required.

Costs for sludge disposal techniques are included in other sections of this document. Costs for filtrate disposal, if the overflow cannot be pumped to the head of the treatment works, can be determined using other sections of this document.

6.5 PRESSURE FILTER PRESS COST EQUATIONS

The cost equations for the capital components and operation and maintenance were developed by estimating the costs for six different sludge flow rates. The capital cost equation calculates the total capital cost (i.e., installed capital plus indirect capital costs). Equipment costs and building costs are separate components in the capital cost equation to enable the user to exclude the cost for a building addition if it is not necessary. The total annual cost is calculated based on the capital and operation and maintenance costs obtained using the equations presented below.

Capital Cost

$$Y = [15{,}600 + 1{,}520\ X^{0.50}] + [4{,}600 + 3.0\ X]$$

$$Y = [\text{Equipment Cost}] + [\text{Building Cost}]$$

Where: Y = $
X = gallons of sludge per day

Range: 500 gpd ≤ X ≤ 50,000 gpd

$$Y = [4{,}181\ X^{0.50} - 579{,}900] + [22{,}300 + 9.8 \times 10^{-2}\ X]$$

$$Y = [\text{Equipment Cost}] + [\text{Building Cost}]$$

Where: Y = $
X = gallons of sludge per day

Range: 50,000 gpd < X ≤ 600,000 gpd

Operation and Maintenance

$$Y = 13{,}400 + 0.92\ X$$

Where: Y = $/year
X = gallons of sludge per day

Range: 500 gpd ≤ X ≤ 50,000 gpd

$$Y = 32{,}900 + 0.67\,X$$

Where: Y = $/year
X = gallons of sludge per day

Range: 50,000 gpd < X ≤ 600,000 gpd

Total Annual Cost

$$Y = [CAP \times CRF] + O\&M$$

Where: Y = $/year
CAP = capital cost
CRF = capital recovery factor (e.g., 0.1175)
O&M = operation and maintenance cost

6.6 SCROLL CENTRIFUGE DESCRIPTION

Centrifuges are a mechanical means of thickening sludges using centrifugal force to enhance the settling process. The radial forces developed in the centrifuge are 500 to 4,000 times more powerful than the gravitational force used in nonmechanical dewatering. There are two basic types of centrifuges: a solid bowl (scroll) centrifuge and a basket centrifuge. The scroll centrifuge, which is a continuous feed unit, is more widely used for dewatering water treatment sludges. The basket centrifuge is a batch process with larger units that require greater operator and monitoring time. Design assumptions and cost estimates provided in this section are for scroll centrifuges.

The scroll centrifuge operates in a horizontal position. Polymer-treated sludge enters the centrifuge through a feed pipe along the axis of the centrifuge. Centrifugal force generated by

the rapid rotation of the bowl causes the sludge to accumulate on the inside of the cylindrical bowl. A screw conveyor rotating at a slightly different speed inside the spinning bowl pushes the accumulating sludge toward the narrow end of the centrifuge to a discharge point. Below the sludge cake discharge point, a container collects the dewatered sludge for disposal. Normally, the centrifuge is placed on a stand four to five feet above the floor to provide room for a solids container below the discharge point. In large treatment works, a conveyor collects and transports the sludge cake to a sludge storage container. Centrate, the liquid separated from the sludge, flows along the bowl wall to the wide end of the centrifuge where it is discharged.

6.7 TECHNOLOGY APPLICABILITY

Scroll centrifuges are used to dewater alum and lime sludges. With influent solids concentrations of 1 to 10 percent solids, an alum sludge with 15 to 30 percent solids and a lime sludge cake with 65 to 70 percent solids are produced. Because of the forces created by the centrifugal motion, scroll centrifuges require minimal time to achieve optimal sludge solids concentrations. A solid residence time of 8 to 12 minutes is typical for a scroll centrifuge.

Daily operation of a scroll centrifuge requires little operator attention. After start-up and initial sludge cake monitoring, periodic checking and a thorough cleaning are all that is required. Most scroll centrifuges are equipped with a hydraulic backdrive. This senses the back pressure on the scroll and varies the residence time of the solids to accommodate differences in influent solids concentrations. The backdrive insures consistent sludge solids concentrations.

Centrifuges have low land requirements and high capital costs. They typically have higher capital and operating costs than comparable nonmechanical dewatering alternatives, but are typically less labor intensive than filter presses. The high labor and capital requirements of centrifuges make them more applicable to larger water systems.

6.8 TECHNOLOGY LIMITATIONS

The dewatering performance of the scroll centrifuge is dependent upon obtaining a good quality flocculent with the polymers. The treated flocculent needs to have a "globular" consistency which allows the water to escape and the sludge to be scrolled to the discharge point. Flocculents that are not firm will not be effectively conveyed through the centrifuge to the discharge point.

A gravity thickener is necessary to increase the concentration of solids in the sludge prior to being pumped into the centrifuge. The additional equipment and operating costs limit the applicability of this technology to smaller systems.

6.9 SCROLL CENTRIFUGE COST COMPONENTS

The following section presents the design assumptions, capital components, and the operation and maintenance components used to prepare the costs for this technology.

6.9.1 Design Assumptions

- The polymer feed system consists of polymer storage tank, a polymer pump, and a polymer/sludge contact tank, and a 20 to 30-minute holding tank.
- A positive displacement pump feeds conditioned sludge to the scroll centrifuge.
- The scroll centrifuge operates 8 to 24 hours per day depending on the size of the water system.
- Centrate collects in a centrate holding tank before being pumped to the head of the treatment works.
- Dewatered sludge collects in a small, wheeled container, which is emptied into a larger solids bin as necessary.

- The large systems are located on the second floor and the dewatered sludge drops into sludge containers located below the centrifuge.

- Accumulated solids require disposal on a periodic basis.

- The dewatered sludge volume is 0.04 of the initial sludge volume.

6.9.2 Capital Components

The capital components for each scroll centrifuge system consist of the following items:

- Schedule 40 steel piping;
- Polymer feed system;
- Positive displacement pump;
- Scroll centrifuge with backdrive;
- Steel centrate tank and pump;
- Dewatered sludge storage bin;
- Building;
- Piping;
- Electrical; and
- Instrumentation.

Table 12 indicates the sludge flow rates and centrifuge motor sizes used to develop the capital cost equation for the scroll centrifuge system.

6.9.3 Operation and Maintenance Components

The operation and maintenance components for each scroll centrifuge system include the following items:

- Electricity;
- Polymer;
- Labor;
- Maintenance labor and materials; and
- Insurance and general and administration.

TABLE 12

SCROLL CENTRIFUGE

Sludge Flow Rate (gal/day)	Centrifuge Capacity
2,000	7½ hp
5,000	7½ hp
50,000	10 hp
250,000	25 hp
600,000	40 hp
2,500,000	80 hp x 2
5,200,000	80 hp x 4

6.9.4 Cost Components Excluded

The following cost components are not included in the cost equations for scroll centrifuge systems:

- Scroll cleaning apparatus;
- Dewatered sludge disposal; and
- Centrifuge overflow disposal, if the overflow cannot be pumped to the head of the treatment plant.

Costs for sludge disposal techniques are included in other sections of this document. Costs for centrifuge overflow disposal, if the overflow cannot be pumped to the head of the treatment works, can be determined using other sections of this document.

6.10 SCROLL CENTRIFUGE COST EQUATIONS

The cost equations for the capital components and operation and maintenance were developed by estimating the costs for seven different sludge flow rates. The capital cost equation calculates the total capital cost (i.e., installed capital plus indirect capital costs). Equipment costs and building costs are separate components in the capital cost equation to enable the user to exclude the cost for a building addition if it is not necessary. The total annual cost is calculated based on the capital and operation and maintenance costs obtained using the equations presented below.

Capital Cost

$$Y = [138{,}400 + 666\,X^{0.50}] + [15{,}400 + 59\,X^{0.50}]$$

$$Y = [\text{Equipment Cost}] + [\text{Building Cost}]$$

Where: Y = $
X = gallons of sludge per day

Range: $2{,}000 \text{ gpd} \leq X < 250{,}000 \text{ gpd}$

$$Y = [287{,}000 + 0.63\,X] + [40{,}400 + 2.26 \times 10^{-2}\,X]$$

$$Y = [\text{Equipment Cost}] + [\text{Building Cost}]$$

Where: Y = $
X = gallons of sludge per day

Range: $250{,}000 \text{ gpd} \leq X \leq 5{,}500{,}000 \text{ gpd}$

Operation and Maintenance

$$Y = 17{,}500 + 311\,X^{0.50}$$

Where: Y = $/year
X = gallons of sludge per day

Range: 2,000 gpd ≤ X < 250,000 gpd

$$Y = 72{,}000 + 0.43\,X$$

Where: Y = $/year
X = gallons of sludge per day

Range: 250,000 gpd ≤ X ≤ 5,500,000 gpd

Total Annual Cost

$$Y = [CAP \times CRF] + O\&M$$

Where: Y = $/year
CAP = capital cost
CRF = capital recovery factor (e.g., 0.1175)
O&M = operation and maintenance cost

[illegible] ge[illegible] epori permanen lag[illegible]
osal [illegible] es an[illegible] storage lagoons are used for dewa[illegible]
[illegible] ica[illegible]

7.0 NONMECHANICAL DEWATERING

Nonmechanical dewatering of sludges and slurries is performed in storage lagoons and permanent lagoons. Nonmechanical dewatering processes are characterized by their simplicity to operate and maintain. In a storage lagoon, dewatered sludge is removed for disposal via land application or in a landfill. In a permanent lagoon, dewatered sludge remains in the lagoon and the lagoon is the final disposal site for the sludge.

7.1 LAGOON DESCRIPTION

Lagoons historically are the most common, and often the least expensive, method to thicken or dewater water treatment sludge; however, they are land intensive. The lagoons are lined ponds designed to collect and dewater sludge for a predetermined period of time. Dewatering of the sludge occurs by decanting and by evaporation of the supernatant. Additional dewatering can also be achieved if the lagoons have a sand bottom. Storage lagoons are sized according to the sludge volumes generated and storage time required for an individual treatment facility. When a storage lagoon has reached its designed capacity, the remaining solids are typically removed from the lagoon using a front-end loader and hauled off site for final disposal. Some treatment works use permanent lagoons as long-term disposal sites for sludges. As one lagoon fills, another one is excavated.

Lagooning is a low technology method of sludge treatment and disposal. There are two types of lagoons: permanent and storage. In this report, permanent lagoons are used for the final disposal of lime softening sludges and storage lagoons are used for dewatering chemical coagulation (alum) sludges. Typically, lime sludges enter the lagoon at three percent solids and can be dewatered to 50 to 60 percent solids, whereas, alum sludges enter the lagoon at one percent solids and can be dewatered to 7 to 15 percent solids. In general, a sludge needs to be at least 20 percent solids before it can be landfilled.

Lagoons are lined ponds designed to collect and dewater sludge for a predetermined period of time. Liquid is removed from the sludge by both decanting and evaporating the supernatant. Storage lagoons are sized according to the sludge volumes generated and storage time required for an individual treatment facility. When a storage lagoon has reached its designed capacity, the remaining solids are dredged or vacuumed from the lagoon and prepared for final disposal. Some treatment works use permanent lagoons as long-term disposal sites for sludges and as one lagoon fills another one is excavated.

Lagoons are usually earthen basins with gradual side slopes. Sizes range from less than one to 56 acres and from 4- to 20-feet deep. Clay or synthetic liners cover the bottom and sidewalls to prevent ground water infiltration of sludge leachate. Sludge flows from the treatment plant by gravity or is pumped to the lagoon through an underground pipe. The lagoon inlet structure is designed to minimize turbulence in the lagoon caused by the incoming sludge. The outlet structure usually provides for decanting of the supernatant at various draw-off depths.

If the water byproduct residuals managed in the lagoons are determined to be hazardous waste, these lagoons are subject to compliance with hazardous waste regulations for surface impoundments. These regulations specify that the impoundments must be triple-lined with a synthetic flexible membrane liner and a composite double liner. Although there are no federal requirements specifying the design for lagoons containing nonhazardous waste at this time, regulations regarding nonhazardous waste in lagoons may be enacted in the future. Therefore, good engineering practice suggests that at a minimum a synthetic liner should be included in the design of the lagoon. [illegible] the 20 [illegible] ds concentration required by many [illegible] fter [illegible] lagoon [illegible]

7.2 TECHNOLOGY APPLICABILITY

Storage lagoons are primarily used for the dewatering of lime softening sludge, although coagulant (alum) sludge can also be dewatered in certain situations. Final solids

concentrations reported for lime and alum sludges after lagooning are 50 to 60 percent and 7 to 15 percent, respectively. The higher solid concentrations (greater than 50 percent) are achieved through decanting of the supernatant layer and allowing the sludge to air dry.

Lagoons can operate under a variety of sludge flows and solids concentrations. Lagoons with low-turbulence inlet structures and outlet structures designed to minimize suspended solids carryover can accept backwash waters directly from the filters. This eliminates the need for backwash holding tanks and sludge thickeners. Lagoons can withstand large variances in sludge quality and do not require chemical conditioning of alum sludges.

Lagoons in areas with beneficial climates can achieve greater sludge dewatering. In areas with hot, dry climates, storage lagoons function as evaporation ponds and can dewater both alum and lime sludges to solids concentrations suitable for landfilling. In northern climates, natural winter freezing dehydrates alum sludges and releases chemically bound water in the sludge. When the frozen sludge thaws, it retains a granular composition and precipitates to the lagoon bottom. After the supernatant is decanted, solids with the consistency of coffee grounds remain and are also suitable for landfilling.

7.3 TECHNOLOGY LIMITATIONS

Lagooning frequently does not produce a dewatered sludge suitable for landfill disposal. Alum sludges do not dewater well in lagoons. The top layer of sludge dries, hardens, and seals the moisture in the layers below. Even after several years of lagooning, alum sludges may need further dewatering to meet the 20 percent solids concentration required by many landfills. Often, alum sludge is allowed to dry further after removal from the lagoon and prior to hauling from the site. Thickened alum sludges are difficult to remove from lagoons. Removal requires specialized dredging or vacuuming equipment and knowledgeable operators.

Lagooning is a land intensive dewatering process. Water treatment facilities with limited land availability will need to consider the costs of regular lagoon cleaning and sludge disposal or the cost of acquiring land for additional lagoons when evaluating the feasibility of this technology. In addition, permanent lagoons that act as final disposal sites for sludges may be considered solid waste landfills in some states. As such, the lagoons would need to meet the design, ground water monitoring, and permitting requirements of the state's environmental regulatory agency.

There is also a limitation on how small a lagoon can be sized. This limitation is the result of constructing an engineered excavation rather than simply a hole dug in the ground. To maintain and construct the side slopes of the lagoon, the bottom surface area must be a minimum size to accommodate the equipment used.

7.4 STORAGE LAGOONS COST COMPONENTS

The following section presents the design assumptions, capital components, and the operation and maintenance components used to prepare the costs for this technology.

7.4.1 Design Assumptions

- Storage lagoons are used to dewater alum sludges and are periodically dredged.
- Permanent lagoons are used to dewater lime sludges; each storage lagoon has a 10-year capacity.
- The lagoons are earthen basins lined with a synthetic membrane and a geotextile support fabric. They have no underdrains, but have a variable height outlet structure to discharge supernatant. Permanent lagoons are 6- to 12-feet deep and storage lagoons range from 3- to 5-feet deep.
- Decanted supernatant from the lagoon is collected and pumped to the head of the treatment plant.
- Sludge flows from the treatment plant to the lagoon by gravity via 1,250 to

4,000 feet of 2- to 6-inch diameter PVC piping. Pipes are laid 4 feet below grade.

- Alum treatment plants operate two lagoons. Each lagoon has a six month storage capacity. After six months, the second lagoon is used while free liquid from the idle lagoon is allowed to evaporate. The remaining free liquid is decanted and returned to the head of the treatment plant. Sludge is dredged from the lagoon on an annual basis.

- Lime treatment plants operate 2 or 4 lagoons to provide a total of 20 years of permanent storage. Each lagoon has a 6 or 12 month storage capacity prior to drying and decanting. Free liquid is continuously decanted from the lagoon while it is accepting sludge and returned to the head of the treatment plant. After the 6 or 12 month period, another lagoon is used while free liquid from the idle lagoon is decanted and evaporated. The remaining sludge is allowed to dry prior to the next sludge application.

- Approximately 1.5 cubic feet of solids per 1,000 gallons of initial alum sludge volume will require final disposal from the storage lagoons.

7.4.2 Capital Components

The capital components for each storage lagoon consist of the following items:

- Two or four lined earthen lagoons;
- Piping and fittings;
- Trenching;
- Decant collection pump;
- Electrical;
- Instrumentation; and
- Land clearing.

Tables 13 and 14 indicate the sludge volumes, number of ponds, and total lagoon surface area used to develop the capital cost equation for lime softening and alum storage lagoons, respectively.

TABLE 13

STORAGE LAGOONS - LIME SOFTENING SLUDGE

Lime Softening Sludge Volume (gal/day)	Number of Ponds	Total Lagoon Surface Area (acres)
7,000	2	5
20,000	2	7
50,000	2	18
100,000	2	37
500,000	4	112
1,000,000	4	224

TABLE 14

STORAGE LAGOONS - ALUM SLUDGE

Alum Sludge Volume (gal/day)	Number of Ponds	Total Surface Area (acres)
250	2	0.1
1,000	2	0.4
5,000	2	2
10,000	2	4
50,000	2	19
100,000	2	22
200,000	2	45
500,000	2	112

7.4.3 Operation and Maintenance Components

The operation and maintenance components for each storage lagoon include the following items:

- Labor and supervision;
- Maintenance labor and materials;
- Electricity;
- Insurance and general and administration; and
- Annual sludge removal, alum sludge only.

7.4.4 Cost Components Excluded

The following cost components are not included in the cost equations for storage lagoons:

- Sludge dewatering equipment;
- Dewatered sludge disposal; and
- Supernatant disposal, if the supernatant cannot be pumped to the head of the treatment plant.

Costs for sludge disposal techniques are included in other sections of this document. Costs for supernatant disposal, if the supernatant cannot be pumped to the head of the treatment plant, can be determined using other sections of this document.

7.5 LIME SOFTENING STORAGE LAGOON COST EQUATIONS

The cost equations for the capital components and operation and maintenance were developed by estimating the costs for six different sludge flow rates. The capital cost equation calculates the total capital cost (i.e., installed capital plus indirect capital costs). Equipment costs and land costs are separate components in the capital cost equation to enable the user to exclude the cost for purchasing land if it is not necessary. The total annual cost is calculated from the capital and operation and maintenance costs obtained using the equations presented below.

Lime Softening Capital Costs

$$Y = [144\ X^{0.91}] + [\{(1.57 \times 10^{-3})\ X^{0.87}\}\ Z]$$

$$Y = [\text{Equipment Cost}] + [\text{Land Cost}]$$

Where: Y = $
X = gallons of sludge per day
Z = land cost in $/acre (e.g., $10,000/acre)

Range: 2,800 gpd ≤ X ≤ 1,000,000 gpd

Operation and Maintenance

$$Y = 7{,}700 + 1.69\ X$$

Where: Y = $
X = gallons of sludge per day

Range: 2,800 gpd ≤ X ≤ 50,000 gpd

$$Y = 33{,}100 + 1.33\ X$$

Where: Y = $/year
X = gallons of sludge per day

Range: 50,000 gpd < X ≤ 1,000,000 gpd

Total Annual Cost

$$Y = [CAP \times CRF] + O\&M$$

Where: Y = $/year
CAP = capital cost
CRF = capital recovery factor (e.g., 0.1175)
O&M = operation and maintenance cost

7.6 ALUM SLUDGE STORAGE LAGOONS COST EQUATIONS

The cost equations for the capital components and operation and maintenance were developed by estimating the costs for eight different sludge flow rates. The capital cost equation calculates the total capital cost (i.e., installed capital plus indirect capital costs). Equipment costs and land costs are separate components in the capital cost equation to enable the user to exclude the cost for purchasing land if it is not necessary. The total annual cost is calculated from the capital and operation and maintenance costs obtained using the equations presented below.

Alum Capital Costs

$$Y = [13{,}700 + 60.8\,X] + [(0.5 + 3.44 \times 10^{-4}\,X)\,Z]$$

$$Y = [\text{Equipment Cost}] + [\text{Land Cost}]$$

Where: Y = $
X = gallons of sludge per day
Z = land cost in $/acre (e.g., $10,000/acre)

Range: 250 gpd ≤ X ≤ 10,000 gpd

$$Y = [326{,}500 + 28.6\,X] + [(4.2 + 2.35 \times 10^{-4}\,X)\,Z]$$

$$Y = [\text{Equipment Cost}] + [\text{Land Cost}]$$

Where: Y = $
X = gallons of sludge per day
Z = land cost in $/acre (e.g., $10,000/acre)

Range: 10,000 gpd ≤ X ≤ 500,000 gpd

Alum Operation and Maintenance

$$Y = 6{,}100 + 2.56\,X$$

Where: Y = \$/year
X = gallons of sludge per day

Range: 250 gpd $\leq X \leq$ 10,000 gpd

$$Y = 28{,}500 + 1.02\,X$$

Where: Y = \$/year
X = gallons of sludge per day

Range: 10,000 gpd $\leq X \leq$ 500,000 gpd

Total Annual Cost

$$Y = [CAP \times CRF] + O\&M$$

Where: Y = \$/year
CAP = capital cost
CRF = capital recovery factor (e.g., 0.1175)
O&M = operation and maintenance cost

[illegible] 000 mm [illegible] accumulate [illegible]
[illegible] inches [illegible] or reaches a predete[illegible]

8.0 EVAPORATION PONDS

8.1 TECHNOLOGY DESCRIPTION

Evaporation ponds are a nonmechanical means by which favorable climatic conditions are used to dewater waste brines generated by treatment processes such as reverse osmosis and ion exchange. The technology involves discharging the waste brines to a pond for storage and evaporation. The lagoons are designed with a large surface area to allow solar and wind evaporation to dewater the brines. Pond sizes are determined by the surface area required to evaporate the waste flows and by the desired storage capacity.

Evaporation ponds normally have an earthen construction with gradually sloping berms. Inlet piping transfers the wastes by gravity flow, or in the case of reverse osmosis, by the operating pressure from the treatment plant, to the pond. Outlet piping from the pond may be needed in situations where sludge loading exceeds the design capacity of the pond or for handling overflow in emergency conditions; otherwise, no outlet is necessary. Synthetic or clay liners may be necessary to prevent leaching of brine solutions into subsurface soil and ground water. Site-specific soil and hydrogeologic information will determine if lining of the pond bottom and sidewalls is required.

Depending on the total dissolved solids (TDS) concentration of the brine, solids removal may be required from the pond on an intermittent basis. For brines with a TDS concentration ranging from 15,000 to 35,000 milligrams per liter (mg/l), solids will accumulate within the pond at a rate of ½ to 1½ inches per year. When solids accumulation reaches a predetermined depth, inflow to the pond is stopped and evaporation continues until a solids concentration suitable for disposal is achieved. Front-end loaders and dozers remove the solids to trucks for transport to the disposal site.

If the water byproduct residuals managed in the ponds are determined to be hazardous waste, these ponds are subject to compliance with the hazardous waste regulations for surface impoundments. These regulations specify that the impoundments must be triple-lined with a synthetic flexible membrane liner and a composite double liner. Although there are no federal requirements specifying the design for ponds containing nonhazardous waste at this time, regulations regarding nonhazardous waste in ponds may be enacted in the future. Therefore, good engineering practice suggests that at a minimum a synthetic liner should be included in the design of the pond.

8.2 TECHNOLOGY APPLICABILITY

Evaporation ponds are used primarily for treatment of waste brines generated by ion exchange and reverse osmosis processes. These treatment methods produce large volume waste streams with high dissolved solids concentrations that make other nonmechanical and all mechanical treatment methods impractical.

Evaporation ponds dewater brine solutions quickly with few operation and maintenance requirements; however, evaporation ponds can only be utilized in areas of the country with favorable climatic conditions, such as high temperatures, low humidity and low precipitation. Waste brines from ion exchange and reverse osmosis require no pretreatment and are piped directly from the treatment plant. Evaporation ponds accommodate batch or continuous loadings and eliminate the need for equalization/holding tanks. In addition, ponds treating wastes with low TDS concentrations will operate for several years before solids accumulation necessitates removal.

8.3 TECHNOLOGY LIMITATIONS

Several factors limit the applicability of evaporation ponds as a sludge dewatering option. Evaporation is a land intensive treatment requiring shallow basins with large surface areas.

The high volumes of waste brines generated by membrane treatment processes make land availability an important consideration. Since reverse osmosis generates large reject volumes, the land requirements increase, which in turn, increase the cost. Consequently, evaporation becomes impractical for most large system reverse osmosis treatment plants.

Local climatic conditions are also important factors in determining the applicability of evaporation. Climatic conditions primarily affect evaporation rates. A regional comparison of the mean annual evaporation and mean annual precipitation indicates that the northeast, southeast, Great Lakes, and coastal northwest regions of the United States have low, net annual evaporations and are unsuitable for evaporation ponds. In addition, evaporation ponds are generally considered unsuitable for alum and lime softening sludges.

8.4 COST COMPONENTS

The following section presents the design assumptions, capital components, and the operation and maintenance components used to prepare the costs for this technology.

8.4.1 Design Assumptions

- The evaporation pond is used for treatment of ion exchange or reverse osmosis brines. The influent solids concentration ranges from 1.5 to 3.5 percent by weight.

- Reverse osmosis systems with flow rates of 4.8 MGD and greater and ion exchange systems with flow rates of 51 MGD and greater are not considered applicable for evaporation ponds since over 150 acres is required to evaporate the daily generation volumes.

- Waste brines flow from the treatment plant to the evaporation pond by gravity or by the pressure from the treatment system via 1,250 to 4,000 feet of 4- to 8-inch diameter PVC piping. Pipes are laid 4 feet below grade.

- Waste brine flow rates range from 31,000 to 500,000 gallons per day.

- The pond is designed for a geographical region with a net annual evaporation rate of at least 45 inches per year.

- The pond has no outlet.

- The pond sides and earthen berm are engineered to have two and one-half to one (2.5:1) side slopes and 2 feet of free board.

- Soils cut from the excavation of the basin are used to construct the berm.

- The pond is constructed with a synthetic membrane liner and a geotextile support fabric; 1 foot of sand is placed on top of the liner.

- Piping from the treatment process is sized to discharge the waste brines to the ponds as they are generated. The treatment process is assumed to run 8 to 16 hours per day.

- The evaporation ponds are sized with sufficient surface area to evaporate the average daily flow. The pond depth is 2 feet; this depth provides solids storage volume and accommodates peak flows.

8.4.2 Capital Components

The capital components for each evaporation pond consist of the following items:

- Evaporation ponds;
- Piping and fittings;
- Pumps;
- Land clearing; and
- Instrumentation.

Table 15 indicates the brine volumes, number of ponds, and the total required surface area used to develop the capital cost equation for evaporation ponds.

8.4.3 Operation and Maintenance Components

The operation and maintenance components for each evaporation pond include the following items:

TABLE 15

EVAPORATION PONDS

Brine Volume (gal/day)	Number of Ponds	Total Surface Area (acres)
31,000	2	10
50,000	2	15
100,000	2	30
200,000	4	60
400,000	6	120
500,000	3	150

- Mowing;
- Labor and supervision;
- Maintenance labor and materials; and
- Insurance and general and administration.

8.4.4 Cost Components Excluded

The following cost component is not included in the cost equations for evaporation ponds:

- Dewatered sludge disposal

Costs for sludge disposal are included in other sections of this document.

8.5 COST EQUATIONS

The cost equations for the capital components and for operation and maintenance were developed by estimating the costs for six different brine flow rates. The capital cost equation calculates the total capital cost (i.e., installed capital plus indirect capital cost). The total annual cost is calculated from the capital and operation and maintenance costs obtained using the equations presented below.

Capital Cost

$$Y = [193{,}600 + 28.8\,X] + [(4.08\,X^{0.98})\,Z]$$

$$Y = [\text{Equipment Cost}] + [\text{Land Cost}]$$

Where: Y = $

X = gallons of brine per day

Z = land cost in $/acre (e.g., $10,000/acre)

Range: 30,000 gpd $\leq X \leq$ 150,000 gpd

$$Y = [44{,}820\,X^{0.5} - 1.43 \times 10^{7}] + [(4.08\,X^{0.98})\,Z]$$

OR

$$Y = [\text{Equipment Cost}] + [\text{Land Cost}]$$

Where: Y = $

X = gallons of brine per day

Z = land cost in $/acre (e.g., $10,000/acre)

Range: 150,000 gpd < X ≤ 500,000 gpd

Operation and Maintenance

$$Y = 11{,}600 + 0.96\,X$$

Where: Y = $/year

X = gallons of brine per day

Range: 30,000 gpd ≤ X ≤ 150,000 gpd

$$Y = 1{,}500\,X^{0.50} - 476{,}000$$

Where: Y = $/year

X = gallons of brine per day

Range: 150,000 gpd < X ≤ 500,000 gpd

Total Annual Cost

$$Y = [CAP \times CRF] + O\&M$$

Where: Y = $/year

CAP = capital cost

CRF = capital recovery factor (e.g., 0.1175)

O&M = operation and maintenance cost

9.0 POTW DISCHARGE

9.1 TECHNOLOGY DESCRIPTION

Sludges, slurries, and brines generated from the treatment of drinking water are, in some cases, discharged directly to publicly owned treatment works (POTWs) for treatment and disposal. This byproduct disposal technique is used most often where the water treatment facility and the POTW are under the same management authority. The water treatment byproducts are most often discharged to the POTW via the sewer system, but small volumes may be stored on site and delivered to the POTW in a tanker truck. For each water treatment facility a conveyance system is required to access into the sanitary sewer system if an adequate system is not already in place. Installation of this system would include piping, pipe fittings and trenching.

The discharge piping is the primary capital cost associated with this treatment method. Polyvinyl chloride (PVC) or reinforced concrete piping is normally chosen for its low cost and corrosion resistance. Pipe diameter is determined based on the maximum expected flow and acceptable head losses. Washout points are necessary at all low points in the discharge line to prevent clogging by accumulated sediments. Gate valves are necessary at regular intervals to control waste stream flow in the event of a pipe burst. The pipe must be laid sufficiently below grade to prevent winter freezing.

An equalization tank/lagoon is optional and serves several purposes when disposing of treatment wastes by POTW discharge. First, the equalization tank/lagoon reduces the necessary discharge piping diameter by allowing filter backwash waters to be continuously discharged at a lower flow rate. Second, the equalization tank/lagoon reduces the variations in the quality of the discharged wastes by mixing the wastes generated over a period of time. Third, the equalization tank/lagoon provides an emergency waste storage area when discharge

is not possible. The size of the equalization tank/lagoon will depend on the byproduct volumes and the required number of days of storage.

Additional costs for treating waste in a POTW include any charges imposed by the municipality for use of the sewer system (e.g., lift stations, piping network), basic fees charged by the POTW, and any strength surcharges based on excessive total suspended solids (TSS) and chemical oxygen demand (COD) in the waste stream. Many small communities (i.e., less than 50,000 residents) have not developed charges for excess TSS and COD in wastewater since there is not significant industry in many of these towns. Many communities charge flat rate fees instead of charges based on waste volumes. In addition, some communities do not charge water treatment plants for wastes sent to the POTW facility since they are part of the same entity (i.e., municipal public works).

9.2 TECHNOLOGY APPLICABILITY

Discharge into sanitary sewers is a common method of disposing water treatment byproducts including brines and filter backwash. Alum coagulant and lime sludges also may be discharged to a POTW under certain conditions. The ability of the wastewater treatment plant to accept the increased hydraulic and solids loading must be considered when determining if POTW discharge is an appropriate disposal method. In addition, the capacity of the sewer to handle the flow rates and solids content of the waste must be considered. The sewer must maintain a sufficient flow velocity to prevent solids deposition.

permit

In some cases, chemicals in the water treatment byproducts will actually aid in the treatment of wastewaters at the POTW by acting as a settling agent. In other cases, the solids content or other constituents in the byproducts may hinder the wastewater treatment process and add to the sludge disposal problem at the POTW. A thorough analysis of byproduct constituents and volumes is required prior to selection of a POTW as a treatment and disposal option.

9.3 TECHNOLOGY LIMITATIONS

Discharging lime softening sludges to a POTW is normally not recommended due to the dramatic increase in loading to the sludge handling system at the POTW. The disposal of waste brines from the ion exchange and reverse osmosis process is a viable option if the concentrated waste does not adversely affect the sewage treatment process and if the volumes are not excessive in comparison to the POTW capacity.

Disposal of alum sludges via a sewer is not used frequently. The high solids content of alum sludges and the elevated concentrations of aluminum interfere with the wastewater treatment processes. Some POTW refuse to accept alum sludges due to high solids content of the sludge, high aluminum concentrations, and intermittent flows. The POTWs that accept alum sludges often charge higher rates to accept these wastes.

POTW surcharges for disposal to the sewer system substantially increase the cost of this disposal method. POTW charges vary from a flat rate of several dollars per month to $3.65 per thousand gallons discharged. Appendix A presents POTW charges used to determine a typical POTW charge for this document.

In all cases, the water treatment plant must have or be able to gain access to a sanitary sewer line or have convenient truck access. The POTW must be designed with adequate capacity to manage the water treatment waste and specific contaminant levels must not exceed concentration levels specified in the POTW use permit.

9.4 COST COMPONENTS

The following section presents the design assumptions, capital components, and the operation and maintenance components used to prepare the costs for this technology.

9.4.1 Design Assumptions

- Byproduct flow rates range from 2,000 to 25,000,000 gallons per day depending on the water treatment technology.

- The sewer line connection is 500 feet or 1,000 feet from the water treatment system.

- The byproduct stream flows by gravity or under pressure from the treatment process to the sewer line.

- Two-inch minimum diameter pipe is used to prevent clogging. Pipe diameter ranges from 2 to 24 inches.

- PVC or reinforced concrete piping is used.

- A 1- to 2-day storage lagoon is optional.

9.4.2 Capital Components

The capital components for each POTW discharge system consist of the following items:

- Piping and fittings;
- Trenching; and
- Land clearing.

In addition, a pump, storage lagoon, electrical, and instrumentation are added for those facilities electing to store byproducts prior to discharge to a POTW.

Table 16 indicates the brine volumes, pipe diameters and lagoon capacities used to develop the capital cost equation for the POTW systems.

9.4.3 Operation and Maintenance Components

The operation and maintenance components for each POTW discharge system include the following items:

- Labor and supervision;

TABLE 16

POTW DISCHARGE

Byproduct Flow Rate (gal/day)	Pipe Diameter (inches)	Lagoon Capacity
30,000	2	50,000-gallon lagoon
67,500	2	115,000-gallon lagoon
162,500	3	330,000-gallon lagoon
500,000	4	750,000-gallon lagoon
750,000	6	1,125,000-gallon lagoon
1,000,000	6	1,500,000-gallon lagoon
10,000,000	24	15,000,000-gallon lagoon
25,000,000	36	37,500,000-gallon lagoon

- Maintenance labor and materials;
- Basic POTW charges;
- Total suspended solids (TSS) surcharges;
- Electricity; and
- Insurance and general and administration.

9.4.4 Cost Components Excluded

The following cost components are not included in the cost equations for POTW discharge systems:

- Maintenance
- Any fees charged by the POTW for the initial connection; and
- Land cost.

It is assumed the water treatment facility would be able to gain access for piping via an easement.

9.5 COST EQUATIONS

The cost equations for the capital components and operation and maintenance were developed by estimating the costs for eight different brine flow rates. The capital cost equation calculates the total capital cost (i.e., installed capital plus indirect capital costs). The total annual cost is calculated from the capital and operation and maintenance costs obtained using the equations presented below.

9.5.1 500 Feet of Discharge Pipe

Capital Costs

$Y = 4{,}500$

Where: $Y = \$$
X = gallons of brine per day

Range: $2{,}000 \text{ gpd} \leq X < 150{,}000 \text{ gpd}$

$Y = 4{,}600 + 1.9 \times 10^{-3} X$

Where: $Y = \$$
X = gallons of brine per day

Range: $150{,}000 \text{ gpd} \leq X \leq 25{,}000{,}000 \text{ gpd}$

Operation and Maintenance

$Y = [1{,}000] + [(1.83 \times 10^{-3})\ 365\ X] + [(0.12)\ 365\ Z]$

Y = [Operating Cost] + [POTW Volume Charge] + [POTW Strength Charge]

Where: $Y = \$/\text{year}$
X = gallons of brine per day

Z = pounds per day of TSS in excess of 300 ppm
(1.83×10^{-3} = POTW volume charge)
(0.12 = TSS Surcharge)

Range: 2,000 gpd ≤ X ≤ 25,000,000 gpd

Total Annual Cost

$$Y = [CAP \times CRF] + O\&M$$

Where: Y = $/year
CAP = capital cost
CRF = capital recovery factor (e.g., 0.1175)
O&M = operation and maintenance cost

9.5.2 1000 Feet of Discharge Pipe

Capital Costs

$$Y = 8{,}700$$

Where: Y = $
X = gallons of brine per day

Range: 2,000 gpd ≤ X < 150,000 gpd

$$Y = 9{,}000 + 3.9 \times 10^{-3} X$$

Where: Y = $
X = gallons of brine per day

Range: 150,000 gpd ≤ X ≤ 25,000,000 gpd

Operation and Maintenance

$$Y = [1{,}000] + [(1.83 \times 10^{-3})\ 365\ X] + [(0.12)\ 365\ Z]$$

Y = [Operating Cost] + [POTW Volume Charge] + [POTW Strength Charge]

Where: Y = $/year
X = gallons of brine per day
Z = pounds per day of TSS in excess of 300 ppm
(1.83×10^{-3} = POTW volume charge)
(0.12 = TSS Surcharge)

Range: 2,000 gpd ≤ X ≤ 25,000,000 gpd

Total Annual Costs

$$Y = [CAP \times CRF] + O\&M$$

Where: Y = $/year
CAP = capital cost
CRF = capital recovery factor (e.g., 0.1175)
O&M = operation and maintenance cost

9.5.3 500 Feet of Discharge Pipe with a Storage Lagoon

Capital Costs

$$Y = [44.3\ X^{0.56}] + [0.5\ Z]$$

Y = [Equipment Cost] + [Land Cost] charge
S.S. charge

Where: Y = $
X = gallons of brine per day
Z = land cost in dollars per acre (e.g., $10,000/acre)

Range: 25,000 gpd ≤ X ≤ 750,000 gpd

$$Y = [1.13\ X^{0.84}] + [\{(2.47 \times 10^{-5})\ X^{0.74}\}\ Z]$$

$Y =$ [Equipment Cost] + [Land Cost]

Where: $Y = \$$
$X =$ gallons of brine per day
$Z =$ land cost in dollars per acre (e.g., $10,000/acre)

Range: $750{,}000 \text{ gpd} < X \leq 25{,}000{,}000 \text{ gpd}$

<u>Operation and Maintenance</u>

$$Y = [3{,}500 + 2.25 \times 10^{-2} X] + [(1.83 \times 10^{-3}) 365 X] + [(0.12) 365 Z]$$

$Y =$ [Operating Cost] + [POTW Volume Charge] + [POTW Strength Charge]

Where: $Y = \$/\text{year}$
$X =$ gallons of brine per day
$Z =$ TSS pounds per day in excess of 300 ppm
(1.83×10^{-3} = POTW volume charge)
(0.12 = TSS Surcharge)

Range: $25{,}000 \text{ gpd} \leq X \leq 500{,}000 \text{ gpd}$

$$Y = [0.30 X^{0.81}] + [(1.83 \times 10^{-3}) 365 X] + [(0.12) 365 Z]$$

$Y =$ [Operating Cost] + [POTW Volume Charge] + [POTW Strength Charge]

Where: $Y = \$/\text{year}$
$X =$ gallons of brine per day
$Z =$ TSS pounds per day in excess of 300 ppm
(1.83×10^{-3} = POTW volume charge)
(0.12 = TSS Surcharge)

Range: $500{,}000 \text{ gpd} < X \leq 25{,}000{,}000 \text{ gpd}$

Total Annual Cost

$$Y = [CAP \times CRF] + O\&M$$

Where: Y = $/year
CAP = capital cost
CRF = capital recovery factor (e.g., 0.1175)
O&M = operation and maintenance cost

9.5.4 1000 Feet of Discharge Pipe with a Storage Lagoon

Capital Cost

$$Y = [19{,}500 + 0.11\,X] + [0.5\,Z]$$

$$Y = [\text{Equipment Cost}] + [\text{Land Cost}]$$

Where: Y = $
X = gallons of brine per day
Z = land cost in dollars per acre (e.g., $10,000/acre)

Range: 25,000 gpd $\leq X \leq$ 750,000 gpd

$$Y = [60{,}200 + 6.97 \times 10^{-2}\,X] + [\{(2.47 \times 10^{-5})\,X^{0.74}\}\,Z]$$

$$Y = [\text{Equipment Cost}] + [\text{Land Cost}]$$

Where: Y = $
X = gallons of brine per day
Z = land cost in dollars per acre (e.g., $10,000/acre)

Range: 750,000 gpd $< X \leq$ 25,000,000 gpd

Operation and Maintenance

$$Y = [3{,}500 + 2.25 \times 10^{-2} X] + [(1.83 \times 10^{-3}) 365 X] + [(0.12) 365 Z]$$

Y = [Operating Cost] + [POTW Volume Charge] + [POTW Strength Charge]

Where: Y = $/year
X = gallons of brine per day
Z = TSS ponds in excess of 300 ppm
(1.83×10^{-3} = POTW volume charge)
(0.12 = TSS Surcharge)

Range: 25,000 gpd $\leq$ X $\leq$ 500,000 gpd

$$Y = [0.30 X^{0.81}] + [(1.83 \times 10^{-3}) 365 X] + [(0.12) 365 Z]$$

Y = [Operating Cost] + [POTW Volume Charge] + [POTW Strength Charge]

Where: Y = $/year
X = gallons of brine per day
Z = TSS pounds in excess of 300 ppm
(1.83×10^{-3} = POTW volume charge)
(0.12 = TSS Surcharge)

Range: 500,000 gpd < X $\leq$ 25,000,000 gpd

Total Annual Cost

$$Y = [CAP \times CRF] + O\&M$$

Where: Y = $/year
CAP = capital cost
CRF = capital recovery factor (e.g., 0.1175)
O&M = operation and maintenance cost

10.0 DIRECT DISCHARGE

10.1 TECHNOLOGY DESCRIPTION

Directly discharging water treatment byproducts into surface water is a common sludge, slurry and brine disposal method. The technology involves piping the waste stream from the water plant to a receiving body of water such as a river, lake or ocean. Pumping, gravity or, in the case of reverse osmosis, pressure from the treatment plant provides the force necessary to carry the byproduct to the receiving waters. Generally, no pretreatment or concentration of the byproduct stream is practiced prior to discharge. The receiving waters dilute the waste concentration and gradually incorporate the sludge or brine.

The piping required to carry the byproduct stream to the outfall is the primary capital cost associated with this treatment method. Polyvinyl chloride (PVC) or reinforced concrete piping is normally chosen for its low cost and corrosion resistance. Pipe diameter is determined based on the maximum expected flow and acceptable head losses. Washout points are necessary at all low points in the discharge line to prevent clogging by accumulated sediments. Gate valves are necessary at regular intervals to control waste stream flow in the event of a pipe burst. The pipe must be laid sufficiently below grade to prevent winter freezing.

An equalization tank/lagoon is optional and serves several purposes when disposing of treatment wastes by direct discharge. First, the equalization tank/lagoon reduces the necessary discharge piping diameter by allowing filter backwash waters to be continuously discharged at a lower flow rate. Second, the equalization tank/lagoon reduces the variations in the quality of the discharged wastes by mixing the wastes generated over a period of time. Third, the equalization tank/lagoon provides an emergency waste storage area when discharge is not possible. The size of the equalization tank/lagoon will depend on the byproduct volumes and the required number of days of storage.

10.2 TECHNOLOGY APPLICABILITY

Direct discharge can be used for water treatment systems where little oversight is available. The level of operator experience and maintenance required is minimal. This method has been used to dispose of alum and lime sludges and brines generated by reverse osmosis and ion exchange treatment methods. Generally, there is no treatment of the solids in the sludge or brine prior to discharge. Direct discharge requires the lowest level of oversight and maintenance of all the treatment/disposal methods presented in this document.

10.3 TECHNOLOGY LIMITATIONS

Careful consideration needs to be given to qualitative impacts on receiving streams prior to application of this disposal approach. Byproducts can potentially have a negative effect upon the quality of water in the receiving body. Beyond the direct qualitative effects, low velocities can contribute to accumulation of discharged sludges around the outfall. The accumulation of sludges and sediments can greatly alter the local water quality and create an area of anaerobic activity with lower water pH and odor problems. In addition, sudden increases in water volume and velocity can resuspend settled solids and shock load the receiving waters.

An additional consideration is that there may be Federal, state, or local regulatory limits on direct discharge of water treatment plant byproducts. The discharge of waste into surface water is regulated by the Clean Water Act. Water treatment plants are required to obtain a National Pollutant Discharge Elimination System (NPDES) permit. Some states require toxicity testing of wastewaters as part of their NPDES programs. Reverse osmosis brines may be acutely or chronically toxic to aquatic life. In these cases, direct discharge of untreated wastewater may be prohibited.

Alum sludges can be of special concern. Several studies have investigated the toxicity of aluminum release by alum sludges in receiving waters. The studies indicate a trend of higher trout mortality rates in waters with higher aluminum concentrations and a negative impact on phytoplankton productivity.

10.4 COST COMPONENTS

The following section presents the design assumptions, capital components, and the operation and maintenance components used to prepare the costs for this technology.

10.4.1 Design Assumptions

- Byproduct flow rates range from 2,000 to 25,000,000 gallons per day depending on the water treatment technology.
- The discharge point is 500 feet or 1,000 feet from the water treatment system.
- The byproduct stream flows by gravity or under pressure from the treatment process to the discharge point.
- Two-inch minimum diameter pipe is used to prevent clogging. Pipe diameter ranges from 2 to 24 inches.
- PVC or reinforced concrete piping is used.
- A 1- to 2-day lagoon is optional.

10.4.2 Capital Components

The capital components for each direct discharge system consist of the following items:

- Piping and fittings;
- Trenching; and
- Land clearing.

In addition, a pump, storage lagoon, electrical, and instrumentation are added for those facilities electing to store byproducts prior to direct discharge.

Table 17 indicates the brine volumes, pipe diameters, and storage lagoon capacities used to develop the capital cost equation for direct discharge.

TABLE 17

DIRECT DISCHARGE

Byproduct Flow Rate (gal/day)	Pipe Diameter (inches)	Lagoon Capacity
30,000	2	50,000-gallon lagoon
67,500	2	115,000-gallon lagoon
162,500	3	330,000-gallon lagoon
500,000	4	750,000-gallon lagoon
750,000	6	1,125,000-gallon lagoon
1,000,000	6	1,500,000-gallon lagoon
10,000,000	24	15,000,000-gallon lagoon
25,000,000	36	37,500,000-gallon lagoon

10.4.3 Operation and Maintenance Components

The operation and maintenance components for each direct discharge system include the following items:

- Labor and supervision;
- Maintenance labor and materials;
- Electricity; and
- Insurance and general and administration.

10.4.4 Cost Components Excluded

The following cost components are not included in the cost equations for direct discharge systems:

- NPDES permit application and monitoring costs; and
- Land costs.

It is assumed the water treatment facility would be able to gain access for piping via an easement.

10.5 COST EQUATIONS

The cost equations for the capital components and operation and maintenance were developed by estimating the costs for eight different brine flow rates. The capital cost equation calculates the total capital cost (i.e., installed capital plus indirect capital costs). The total annual cost is calculated from the capital and operation and maintenance costs obtained using the equations presented below.

10.5.1 500 Feet of Discharge Pipe

Capital Costs

$$Y = 4{,}500$$

Where: $Y = \$$
X = gallons of brine per day

Range: $2{,}000 \text{ gpd} \leq X < 150{,}000 \text{ gpd}$

$$Y = 4{,}600 + 1.9 \times 10^{-3} X$$

Where: $Y = \$$
X = gallons of brine per day

Range: 150,000 gpd ≤ X ≤ 25,000,000 gpd

Operation and Maintenance

$Y = 1{,}000$

Where: Y = $/year
X = gallons of brine per day

Range: 2,000 gpd ≤ X ≤ 25,000,000 gpd

Total Annual Cost

$Y = [CAP \times CRF] + O\&M$

Where: Y = $/year
CAP = capital cost
CRF = capital recovery factor (e.g., 0.1175)
O&M = operation and maintenance cost

10.5.2 1000 Feet of Discharge Pipe

Capital Cost

$Y = 8{,}700$

Where: Y = $
X = gallons of brine per day

Range: 2,000 gpd ≤ X < 150,000 gpd

$Y = 9{,}000 + 3.9 \times 10^{-3} X$

Where: Y = $
X = gallons of brine per day

Range: 150,000 gpd ≤ X ≤ 25,000,000 gpd

Operation and Maintenance

$Y = 1{,}000$

Where: Y = \$/year
X = gallons of brine per day

Range: $2{,}000 \text{ gpd} \leq X < 25{,}000{,}000 \text{ gpd}$

Total Annual Cost

$Y = [CAP \times CRF] + O\&M$

Where: Y = \$/year
CAP = capital cost
CRF = capital recovery factor (e.g., 0.1175)
O&M = operation and maintenance cost

10.5.3 500 Feet of Discharge Pipe with a Storage Lagoon

Capital Costs

$Y = [44.3\ X^{0.56}] + [0.5\ Z]$

$Y = [\text{Equipment Cost}] + [\text{Land Cost}]$

Where: Y = \$
X = gallons of brine per day
Z = land cost in dollars per acre (e.g., \$10,000/acre)

Range: $25{,}000 \text{ gpd} \leq X \leq 750{,}000 \text{ gpd}$

$Y = [1.13\ X^{0.84}] + [\{(2.47 \times 10^{-5})\ X^{0.74}\}\ Z]$

$Y = [\text{Equipment Cost}] + [\text{Land Cost}]$

Where: Y = \$
X = gallons of brine per day
Z = land cost in dollars per acre (e.g., \$10,000/acre)

Range: 750,000 gpd < X ≤ 25,000,000 gpd

Operation and Maintenance

$$Y = 3{,}500 + 2.25 \times 10^{-2} X$$

Where: Y = $/year
X = gallons of brine per day

Range: 25,000 gpd ≤ X ≤ 500,000 gpd

$$Y = 0.30 X^{0.81}$$

Where: Y = $/year
X = gallons of brine per day

Range: 500,000 gpd < X ≤ 25,000,000 gpd

Total Annual Cost

$$Y = [CAP \times CRF] + O\&M$$

Where: Y = $/year
CAP = capital cost
CRF = capital recovery factor (e.g., 0.1175)
O&M = operation and maintenance cost

10.5.4 1000 Feet of Discharge Pipe with a Storage Lagoon

Capital Cost

$$Y = [19{,}500 + 0.11 X] + [0.5 Z]$$

$$Y = [\text{Equipment Cost}] + [\text{Land Cost}]$$

Where: Y = $
X = gallons of brine per day

Z = land cost in dollars per acre (e.g., $10,000/acre)

Range: 25,000 gpd ≤ X ≤ 750,000 gpd

$$Y = [60{,}200 + 6.97 \times 10^{-2} X] + [\{(2.47 \times 10^{-5}) X^{0.74}\} Z]$$

Y = [Equipment Cost] + [Land Cost]

Where: Y = $
X = gallons of brine per day
Z = land cost in dollars per acre (e.g., $10,000/acre)

Range: 750,000 gpd < X ≤ 25,000,000 gpd

Operation and Maintenance

$$Y = 3{,}500 + 2.25 \times 10^{-2} X$$

Where: Y = $/year
X = gallons of brine per day

Range: 25,000 gpd ≤ X ≤ 500,000 gpd

$$Y = 0.30 X^{0.81}$$

Where: Y = $/year
X = gallons of brine per day

Range: 500,000 gpd < X ≤ 25,000,000 gpd

Total Annual Cost

$$Y = [CAP \times CRF] + O\&M$$

Where: Y = $/year
CAP = capital cost
CRF = capital recovery factor (e.g., 0.1175)
O&M = operation and maintenance cost

11.0 LAND APPLICATION

Land application can be used to dispose of liquid and sludge/slurry wastes. Two land application systems are included in this analysis: a sprinkler system for liquid waste and transport off site for application via a specially equipped tanker truck. A general description of land application, its applicability, and limitations is presented below. Separate cost information is presented for land application of liquid and sludge byproducts.

11.1 TECHNOLOGY DESCRIPTION

Land application disposes water treatment byproducts by applying them directly to land surfaces. In general, the liquid sludges contain less than 15 percent solids. Liquid, pumpable, sludge can be applied to land surfaces via spraying from a truck or sprinkler system, injected into the subsurface, or discharged directly to a selected land application field. Dewatered sludge is applied by spreading the solid material over the land surface. Sludge application is dependent on several variables, such as the crop planted in the application field and the chemistry of the soil and sludge.

Liquid sludge can be applied to a selected land application field using various methods. Once on the field, the sludge is treated by infiltration or overland flow, improving water quality by physical, chemical, and biological interactions with the soil. During infiltration, liquid sludge is allowed to percolate into the soils. Slow infiltration is used with moderately permeable soils and the liquid sludge is applied with sprinklers. Rapid infiltration is used with deep and highly permeable soils, such as sands. Liquid sludge is fed continually into a shallow basin during an application period, which may vary between several hours to several weeks, depending on the volume of liquid sludge. Both infiltration systems also can use underdrainage. Underdrainage is a system of buried pipes that captures effluent for reuse or discharge into a receiving body of water; underdrainage minimizes ground water

contamination and subsurface flow of leachate to adjacent properties. Overland flow is used in areas with low permeability soils. Sludge is applied at the top of a slope and runs overland; runoff ditches collect the effluent for reuse or discharge.

Liquid sludge can be applied by surface spraying or subsurface injection. If the application field is near the waste-generating plant or storage lagoon, a sprinkler system can be used to spray liquid sludge from the lagoon. If a remote application field is used, sludge must be transported to the disposal site in a truck. The transport truck or a tanker truck may be used to apply the sludge or may be used strictly for transport. If a tanker truck is used, the sludge must be transferred to another specialized vehicle for application. Depending on the type of vehicle, the sludge can be applied by spraying or subsurface injection.

Dewatered sludges are stored on site until they are transported to a disposal site. At the land application field, the sludge is spread by a truck and tilled into the soil by a tractor. Monitoring of soils, run off from land application, and potentially affected water resources may be advisable to protect open land that may become cropland and to protect local water quality. Monitoring soils for metals and/or radionuclides may be required by state and other agencies.

11.2 TECHNOLOGY APPLICABILITY

Land application of liquid and dewatered sludges provides final disposal for lime and, to some degree, alum sludges. The acceptability of land application is increasing and it is gaining in popularity as a disposal method due to increased regulatory controls associated with other disposal methods. Lime sludges can be used in farmland to neutralize soil pH in place of commercial products. Non-food chain crops, mine reclamation areas, and forests are preferred vegetation for sludge application. Alum sludges do not benefit the soil matrix and should only be used as fill material.

Farmers may be reluctant to allow spreading of sludges on their fields. If farmers are willing to use sludge, the application of sludge is seasonal, usually in the spring; however, sludges are produced year round. Seasonal weather conditions also affect sludge application. In northern areas, sludge application is limited to warmer months when applications can infiltrate soils or the sludge can be injected into soils. Where the ground is frozen or covered with snow for part of the year or applied to farmland, sludge would require stockpiling until soil conditions are appropriate for land application.

11.3 TECHNOLOGY LIMITATIONS

There are numerous limitations to land application of sludges including chemical alteration of the soil, seasonal conditions, and proximity of available land. Land application is not appropriate for brines and is limited for sludges. If radionuclides are present, land application may not be appropriate. Regulated levels of radionuclides vary from state to state and water suppliers should contact their radiation and drinking water authorities to obtain state-specific information.

Land application for alum sludge is limited. Alum sludge contributes little to soil conditioning, and may actually harm soil nutrient balances. Studies indicate that alum sludges fix phosphorous in the soil, preventing uptake of phosphorous in plants.

Application of any sludge to the land may introduce trace metals to the soil. The application lifetime of a site is limited to when one of the trace metals reaches the maximum allowable concentration. Due to the possibility of trace metal absorption by vegetation, non-food chain crop fields are preferred for land application.

Land application also is limited to areas where agricultural land, grassland, or forested land is available nearby, since transportation costs to remote disposal areas increase substantially with distance.

11.4 LIQUID SLUDGE LAND APPLICATION COST COMPONENTS

The following section presents the design assumptions, capital components, and the operation and maintenance components used to prepare the costs for this technology.

11.4.1 Design Assumptions

- The storage lagoon is constructed with a synthetic membrane liner, overlain by 12 inches of sand.
- The applied sludge consists of lime or alum sludge.
- The water treatment plant is 500 feet from the storage lagoon; the sludge is gravity-fed to the lagoon.
- The lagoons are sized for 6-month storage.
- The application field is cultivated farmland. The farmer uses a personally-owned tractor and fuel to till the land following the sludge application.

Application By Truck:

- The sludge is applied twice per year (spring and fall).
- The sludge application is 1 inch thick.

Application By Sprinkler:

- The land application rate is ¼ inch per day.
- The sprinkler system is a portable system with above-ground piping.
- The sprinkler system has a radius of 50 feet.

11.4.2 Capital Components

The capital components for land application consist of the following items:

- Storage lagoon;
- Piping;
- Land;
- Electrical; and
- Sprinkler system, when appropriate.

Table 18 indicates the sludge volume and pond surface areas used to develop the capital cost equation for the land application systems.

TABLE 18

LIQUID SLUDGE LAND APPLICATION

Sludge Volume (gal/day)	Pond Surface Area (acres)
2,000	0.27
10,000	0.92
20,000	1.26
60,000	2.64
100,000	3.72
500,000	10.97

11.4.3 Operation and Maintenance Components

The operation and maintenance components for land application include the following items:

- Electricity;
- Labor and supervision;
- Sludge removal from storage pond;
- Maintenance labor and materials;
- Insurance and general and administration; and
- Transportation and land application fees, when appropriate.

11.4.4 Cost Components Excluded

Costs for incorporation of the liquid sludge into the soil, if necessary, are not included in the cost equations for liquid sludge.

11.5 LIQUID SLUDGE LAND APPLICATION COST EQUATIONS

The cost equations for the capital components and operation and maintenance were developed by estimating the costs for six different sludge flow rates. The capital cost equation calculates the total capital cost (i.e., installed capital plus indirect capital costs). Equipment costs and land costs are separate components in the capital cost equation to enable the user to exclude the cost for purchasing land if it is not necessary. The total annual cost is calculated based on the capital and operation and maintenance costs obtained using the equations presented below.

11.5.1 Sprinkler System

Capital Cost

$$Y = [120\ X^{0.78}] + [\{(2.06 \times 10^{-3})\ X^{0.66}\}\ Z] + [(2.87 \times 10^{-4}\ X)\ Z]$$

$$Y = [\text{Equipment Cost}] + [\text{Pond Land Cost}] + [\text{Application Field Cost}]$$

Where: Y = $
X = gallons of sludge per day
Z = land cost in $/acres (e.g., $10,000/acre)

Range: 2,000 gpd ≤ X ≤ 500,000 gpd

Operation and Maintenance

$$Y = 81.7\ X^{0.56}$$

Where: Y = $/year
X = gallons of sludge per day

Range: 2,000 gpd $\leq X \leq$ 60,000 gpd

$$Y = 8.63\ X^{0.76}$$

Where: Y = \$/year
X = gallons of sludge per day

Range: 60,000 gpd $< X \leq$ 500,000 gpd

Total Annual Cost

$$Y = [CAP \times CRF] + O\&M$$

Where: Y = \$/year
CAP = capital cost
CRF = capital recovery factor (e.g., 0.1175)
O&M = operation and maintenance cost

11.5.2 Trucking System

Capital Cost

$$Y = [104\ X^{0.78}] + [\{(2.06 \times 10^{-3})\ X^{0.66}\}\ Z]$$

$$Y = [\text{Equipment Cost}] + [\text{Land Cost}]$$

Where: Y = \$
X = gallons of sludge per day
Z = land cost in \$/acre (e.g., \$10,000/acre)

Range: 2,000 gpd $\leq X \leq$ 100,000 gpd

Operation and Maintenance

$$Y = 18.9\ X^{0.96}$$

Where: Y = \$/year
X = gallons of sludge per day

Range: 2,000 gpd ≤ X ≤ 100,000 gpd

Total Annual Cost

$$Y = [CAP \times CRF] + O\&M$$

Where:
Y = $/year
CAP = capital cost
CRF = capital recovery factor (e.g., 0.1175)
O&M = operation and maintenance cost

11.6 DEWATERED SLUDGE LAND APPLICATION COST COMPONENTS

11.6.1 Design Assumptions

- The sludge is stockpiled on site.
- The sludge is transported off site for land application.
- A front-end loader is used to load the sludge for transport. The front-end loader is owned by the water treatment plant.
- The application field is within 25 miles of the plant.
- The application field is agricultural. The farmer growing crops on the field uses a personally-owned tractor and fuel to till the sludge into the soil.
- The application rate is two dry tons of sludge per acre.

11.6.2 Capital Components

The capital components for dewatered sludge land application consist of the following items:

- Land for sludge stockpile; and
- Land clearing.

Table 19 indicates the sludge volume and storage pile surface area used to develop the cost equations for the land application of dewatered sludge.

TABLE 19

DEWATERED SLUDGE LAND APPLICATION

Sludge Volume (gal/day)	Storage Pile Surface Area (acres)
2,000	0.34
10,000	2.2
20,000	4.5
60,000	9.2

11.6.3 Operation and Maintenance Components

The operation and maintenance components for each dewatered sludge land application include the following items:

- Labor and supervision;
- Sludge loading; and
- Transportation and land application fees.

11.6.4 Cost Components Excluded

Costs for incorporation of the dewatered sludge into the soil, if necessary, are not included in the cost equations for dewatered sludge.

11.7 DEWATERED SLUDGE LAND APPLICATION COST EQUATIONS

The cost equations for the capital components and operation and maintenance were developed by estimating the costs for four different sludge flow rates. The capital cost equation calculates the total capital cost (i.e., installed capital plus indirect capital costs). Equipment costs and land costs are separate components in the capital cost equation to enable the user to

exclude the cost for purchasing land if it is not necessary. The total annual cost is calculated based on the capital and operation and maintenance costs obtained using the equations presented below.

Capital Cost

$$Y = [111\ X^{0.50} - 4{,}700] + [0.5\ Z]$$

$$Y = [\text{Equipment Cost}] + [\text{Land Cost}]$$

Where: Y = $
X = gallons of sludge per day
Z = land cost in $/acre (e.g., $10,000/acre)

Range: 2,000 gpd $\leq$ X < 2,500 gpd

$$Y = [111\ X^{0.50} - 4{,}700] + [\{(4.9 \times 10^{-2})\ X^{0.50} - 2\}\ Z]$$

$$Y = [\text{Equipment Cost}] + [\text{Land Cost}]$$

Where: Y = $
X = gallons of sludge per day
Z = land cost in $/acre (e.g., $10,000/acre)

Range: 2,500 gpd $\leq$ X < 60,000 gpd

Operation and Maintenance

$$Y = 800 + 28.2\ X$$

Where: Y = $/year
X = gallons of sludge per day

Range: 2,000 gpd $\leq$ X $\leq$ 60,000 gpd

Total Annual Cost

$$Y = [CAP \times CRF] + O\&M$$

Where:
- Y = $/year
- CAP = capital cost
- CRF = capital recovery factor (e.g., 0.1175)
- O&M = operation and maintenance cost

[illegible] equirements, [illegible] and [illegible]
[illegible] ementation of these [illegible] ma
[illegible]

12.0 NONHAZARDOUS WASTE LANDFILL

12.1 TECHNOLOGY DESCRIPTION

Nonhazardous waste landfills are used for ultimate disposal of dewatered byproduct sludges. A landfill is an area of land or an excavation in which wastes are placed for permanent disposal, and that is not a land application unit, surface impoundment, injection well, or waste pile (40 CFR Part 257.2). Two forms of nonhazardous waste landfills are commonly used to dispose of byproduct sludges: monofills and commercial nonhazardous waste landfills. Monofills are landfills that only accept one type of waste (e.g., water treatment byproducts sludges or incinerator ash). Commercial nonhazardous waste landfills accept a mix of residential and industrial wastes.

Nonhazardous waste landfills are regulated by individual states and under the Resource Conservation and Recovery Act (RCRA). Each state has specific guidelines on what types of waste can and cannot be disposed in nonhazardous waste landfills and also determines construction and operation criteria. In many cases, the state requirements are more stringent than the Federal requirements under RCRA.

On October 9, 1991, the U.S. EPA promulgated new criteria for existing and future municipal solid waste landfills (56 FR 50978), a major subset of nonhazardous waste landfills. These criteria include location restrictions, operating criteria, design criteria, ground water monitoring requirements, corrective action requirements, closure and post-closure care requirements, and financial assurance. Implementation of these criteria may directly impact the use of this disposal option and increase the tipping fees charged by some landfills beyond the levels estimated by inflation factors..

12.2 TECHNOLOGY APPLICABILITY AND LIMITATIONS

The percent solids and leaching characteristics of a sludge are the two most important characteristics in determining the applicability of disposal in a nonhazardous waste landfill. The sludge cannot contain free liquids as defined by the Paint Filter Liquids Test (SW-846, Method 9095). In this test, a representative 100 ml or 100 gram sample is placed in a conical paint filter (60 mesh) and placed on a ring stand above a graduated cylinder or beaker. If any liquid collects in the cylinder or beaker, the sludge contains free liquids and is not appropriate for landfilling. If liquid does not collect in the cylinder or beaker, the waste does not contain free liquids and can be disposed in a landfill.

In addition to passing the Paint Filter Liquids Test, the waste cannot exhibit the characteristic of toxicity as determined by the toxicity characteristic leaching procedure (TCLP) test (40 CFR Part 261, Appendix II). In the TCLP test, an extraction is performed to determine if any constituent is present in the waste leachate above the regulated concentration. If any constituents are present at concentrations greater than or equal to the TCLP limits (40 CFR Part 261.24), the waste cannot be disposed in a nonhazardous waste landfill. If constituents are not present above the toxicity characteristic (TC) regulatory level and the waste does not exhibit other characteristics of hazardous waste (i.e., ignitability, reactivity, and corrosivity), the sludge can be disposed in a nonhazardous waste landfill.

Additional sludge characteristics such as sludge specific gravity, compaction analysis, and shear properties also are important when determining the applicability of a sludge for disposal in a nonhazardous waste landfill. These characteristics determine the ease of sludge handling and the overall stability of the disposal area. In most cases, a solids content of 15–20 percent is required for landfilling, but in some cases wastes with less than 15 percent solids will be accepted for disposal.

Many water treatment facilities currently dispose of their waste in commercial or publicly-owned landfills. Landfilling tends to be the most economical option for disposal of water byproduct residues. Rising landfill costs, decreasing landfill availability, and increasing environmental regulations governing waste disposal may make this option less economical. Because the availability of landfills is decreasing and environmental regulations are increasing, there is increased emphasis on the benefits of monofills within the water industry. Generally, the costs associated with the development of a monofill are less than those associated with a municipal or industrial waste landfill. In addition, the water treatment facility limits potential liability by controlling the type of wastes disposed at a monofill.

12.3 OFF-SITE NONHAZARDOUS WASTE LANDFILL COST COMPONENTS

The following section presents the design assumptions and components used to prepare the costs for this technology.

12.3.1 Design Assumptions

- A commercial nonhazardous waste landfill is used for sludge disposal.
- Transportation distance varies from 5 to 50 miles.
- There is no economy of scale for large waste volumes.
- All wastes pass the Paint Filter Liquids Test.
- The waste does not exhibit the characteristics of ignitability, corrosivity, reactivity, or toxicity.

12.3.2 Cost Components

The cost components for non-hazardous waste landfill consist of the following items:

- Commercial nonhazardous waste landfill tipping fee; and
- Transportation fees.

12.4 OFF-SITE NONHAZARDOUS WASTE LANDFILL COST EQUATION

Total Annual Cost

$$Y = [35\ X] + [(2.48 + 0.16Z)\ X]$$

$$Y = [\text{Disposal}] + [\text{Transportation}]$$

Where: Y = $/year
X = tons of sludge requiring disposal/year
Z = transportation distance from 5 to 50 miles

12.5 ON-SITE NONHAZARDOUS WASTE LANDFILL COST COMPONENTS

The following section presents the design assumptions used to prepare the costs for on-site nonhazardous waste landfills, including capital, operation and maintenance, and the closure and post-closure care components..

12.5.1 Design Assumptions

- The landfill has a 20-year operating life.
- The landfill is a combination fill (i.e., a design combining below and above grade fills).
- The landfill containment system consists of two feet of clay, a 30 mil HDPE liner, one foot of sand with a leachate collection system, a geotextile filter fabric, and one foot of native soil fill.
- The intermediate cover consists of slope and earthfill soils.
- A groundwater monitoring system is installed and is sampled biannually.
- The final cover consists of one foot of native soil fill, a geotextile support fabric, a 30 mil PVC liner, one foot of sand with drain tiles, a geotextile filter fabric, and 1.5 feet of topsoil.
- The post-closure care period is 30 years.

12.5.2 Capital Components

The capital components for each landfill consist of the following items:

- Land;
- Land clearing;
- Landfill excavation;
- Composite (clay and synthetic) liner;
- Leachate collection system;
- Groundwater monitoring system;
- Equipment storage and maintenance buildings;
- Visual screening berm;
- Bulldozer;
- Truck; and
- Inspection, testing, and quality assurance.

12.5.3 Operation and Maintenance Components

The operation and maintenance components for each landfill include the following items:

- Labor and supervision;
- Maintenance labor and materials;
- Intermediate cover;
- Groundwater monitoring;
- Leachate collection and treatment; and
- Utilities including electricity and water.

12.5.4 Closure Components

The closure components for each landfill include the following items:

- Final cover system including drain tiles;
- Revegetation; and
- Inspection, testing, and quality assurance.

12.5.5 Post-Closure Components

The post-closure components for each landfill include the following items:

- Groundwater monitoring;

- Leachate collection and treatment;
- Landscape maintenance;
- Slope maintenance; and
- Annual inspection.

12.5.6 Cost Components Excluded

Siting and permitting costs are not included in the cost estimates. Regulatory requirements for Subtitle D landfills vary from state to state. Permitting costs will vary based on the size of the landfill and the local governing jurisdiction.

12.6 ON-SITE NONHAZARDOUS WASTE LANDFILL COST EQUATIONS

<u>Capital Costs</u>

$$Y = [8{,}079\ X^{0.67}] + [(20.4 + 0.33\ X^{0.50})\ Z]$$

$$Y = [\text{Landfill Cost}] + [\text{Land Cost}]$$

Where: Y = $
X = tons of sludge requiring disposal/year
Z = land cost in $/acre (e.g., $10,000/acre)

Range: 2,500 TPY ≤ X ≤ 100,000 TPY

<u>Operation and Maintenance</u>

$$Y = 2{,}411\ X^{0.50} - 83{,}900$$

Where: Y = $/year
X = tons of sludge requiring disposal/year

Range: 2,500 TPY ≤ X < 30,000 TPY

$$Y = 246\,X^{0.50} + 300{,}900$$

Where: Y = \$/year
X = tons of sludge requiring disposal/year

Range: $30{,}000 \le X \le 100{,}000$ TPY

Closure

$$Y = 506\,X^{0.80}$$

Where: Y = \$
X = tons of sludge requiring disposal/year

Range: 2,500 TPY $\le X \le$ 100,000 TPY

Post-Closure

$$Y = 600 + 58.2\,X^{0.5}$$

Where: Y = \$/year
X = tons of sludge requiring disposal/year

Range: 2,500 TPY $\le X \le$ 100,000 TPY

Total Annual Cost

$$Y = [8{,}483\,X^{0.50} - 250{,}300] + [(2.4 + 0.04\,X^{0.50})\,Z]$$

Where: Y = \$/year
X = tons of sludge requiring disposal/year
Z = land cost in \$/acre (e.g., \$10,000/acre)

Range: 2,500 TPY $\le X \le$ 100,000 TPY

$$Y = 246\,X^{0.50} + 300{,}900$$

Where: Y = \$/year
X = tons of sludge requiring disposal/year

Range: $30{,}000 \le X \le 100{,}000$ TPY

Closure

$$Y = 506\,X^{0.80}$$

Where: Y = \$
X = tons of sludge requiring disposal/year

Range: 2,500 TPY $\le X \le$ 100,000 TPY

Post-Closure

$$Y = 600 + 58.2\,X^{0.5}$$

Where: Y = \$/year
X = tons of sludge requiring disposal/year

Range: 2,500 TPY $\le X \le$ 100,000 TPY

Total Annual Cost

$$Y = [8{,}483\,X^{0.50} - 250{,}300] + [(2.4 + 0.04\,X^{0.50})\,Z]$$

Where: Y = \$/year
X = tons of sludge requiring disposal/year
Z = land cost in \$/acre (e.g., \$10,000/acre)

Range: 2,500 TPY $\le X \le$ 100,000 TPY

13.0 HAZARDOUS WASTE LANDFILL

13.1 TECHNOLOGY DESCRIPTION

Hazardous waste landfills are used for ultimate disposal of hazardous wastes (including listed and characteristic wastes). Hazardous waste landfills are used for the disposal of water treatment byproduct sludges exhibiting one or more characteristics of hazardous waste (ignitability, corrosivity, reactivity, and toxicity). A hazardous waste landfill is a disposal facility where hazardous waste is placed in or on land and which is not a waste pile, a land treatment facility, a surface impoundment, an underground injection well, a salt dome formation, a salt bed formation, an underground mine, or a cave (40 CFR Part 260.10). Hazardous waste landfills are regulated by the Federal government under RCRA or by individual states where the state has received RCRA authorization.

Hazardous waste landfills must be permitted in accordance with the hazardous waste permit regulations (40 CFR Part 270). The hazardous waste landfill regulations specify that landfills must be designed with a synthetic flexible membrane liner and composite double liner. In addition, the landfill must have a leachate collection system above the top liner and a leachate detection system between the top liner and bottom composite liner. The containment system for a hazardous waste landfill, in descending order starting with the component closest to the waste, consists of a 1-foot protective soil layer, a geotextile filter fabric, a leachate collection system (a 1-foot sand layer with drainage pipes), a 30-mil HDPE liner, a leachate detection system (a 1-foot sand layer with drainage pipes), a 30 mil-HDPE liner, and a 3-foot layer of compacted clay, which has a hydraulic conductivity $< 1 \times 10^{-7}$ cm/sec. Leachate collected from the landfill must be tested to determine if it is a hazardous waste. If the leachate is determined to be a hazardous waste, it must be managed as a hazardous waste.

13.2 TECHNOLOGY APPLICABILITY AND LIMITATIONS

The leaching characteristics and the presence of free liquids are the two most important characteristics in determining the applicability of sludge disposal in a hazardous waste landfill.. Water treatment byproducts that exhibit the characteristic of ignitability, corrosivity, reactivity, or toxicity require disposal in a hazardous waste landfill. Typically, water treatment byproducts are not ignitable, reactive, or corrosive, but may exhibit the characteristic of toxicity. The TCLP test (40 CFR Part 261, Appendix II) is used to determine if wastes are toxic. In the TCLP test, the extraction is performed to determine if any constituent is present in the waste leachate above the regulated concentration. If any constituents are present at concentrations greater than or equal to the TC limits (40 CFR Part 261.24), the waste is hazardous and requires disposal in a hazardous waste landfill. If no constituents are present above the regulatory level and the waste does not exhibit other characteristics (i.e., ignitability, reactivity, and corrosivity), the sludge can be disposed in a nonhazardous waste landfill.

In addition, the sludge cannot contain free liquids as defined by the Paint Filter Liquids Test (SW-846, Method 9095). In this test, a representative 100 ml or 110 gram sample is placed in a conical paint filter (60 mesh) and placed on a ring stand above a graduated cylinder or beaker. If any liquid collects in the cylinder or beaker, the sludge contains free liquids and is not appropriate for landfilling. If no liquid collects in the cylinder or beaker, the waste does not contain free liquids and can be disposed in a landfill without further dewatering. If the waste contains free liquids, it must be stabilized or treated by another method to remove free liquids prior to disposal in a landfill.

The Hazardous and Solid Waste Amendments of 1984 restrict the land disposal of untreated hazardous wastes. The land disposal restrictions for Third Third Wastes (55 FR 22520) promulgated treatment standards for wastes exhibiting characteristics of hazardous waste (ignitability, corrosivity, reactivity, and toxicity) that require wastes to meet specified

concentration standards prior to land disposal. In general, for sludges exhibiting the TC characteristic, the sludges must be stabilized prior to land disposal to meet the concentration standard. Other treatment methods are acceptable as long as the waste contains TC concentrations at or below the level specified in the Third Third Final Rule prior to land disposal. The additional treatment required by the Land Disposal Restrictions Rule significantly increases the cost of hazardous waste disposal.

13.3 COST COMPONENTS

The following section presents the design assumptions and cost components used to prepare the costs for this disposal technology.

13.3.1 Design Assumptions

- A commercial hazardous waste landfill is used for sludge disposal.
- Transportation distance varies from 200 to 500 miles.
- There is no economy of scale for large waste volumes.
- All wastes pass the Paint Filter Liquids Test or if they fail the Paint Filter Liquids Test, they are stabilized prior to disposal.
- The waste fails the TCLP test.
- Some wastes require stabilization prior to disposal to meet the Land Disposal Restrictions Treatment Standards for TC wastes.

13.3.2 Cost Components

The cost components for hazardous waste landfill consist of the following items:

- Hazardous waste landfill charges;
- Stabilization charges; and
- Transportation fees.

13.3.3 Cost Components Excluded

The following cost components are not included in the cost equations for hazardous waste landfills:

- Generator notification requirements;
- Manifest requirements; and
- Other RCRA requirements, as applicable.

13.4 TOTAL ANNUAL COST EQUATION

13.4.1 Hazardous Waste Disposal

$$Y = [200\ X] + [(7.9 + 0.22\ Z)\ X]$$

$$Y = [\text{Disposal}] + [\text{Transportation}]$$

Where: Y = $/year
X = tons of sludge requiring disposal per year
Z = transportation distance between 200 and 500 miles

13.4.2 Stabilization and Hazardous Waste Disposal

$$Y = [400\ X] + [(7.9 + 0.22Z)\ X]$$

$$Y = [\text{Stabilization/Disposal}] + [\text{Transportation}]$$

Where: Y = $/year
X = tons of sludge requiring disposal per year.
Z = transportation distance between 200 and 500 miles

14.0 RADIOACTIVE WASTE DISPOSAL

14.1 SOURCES OF RADIOACTIVITY IN DRINKING WATER

Radionuclides, such as radium, uranium, and radon, naturally occur in drinking water sources in the United States. Radium is found in ground waters and is most common in the Midwest and Florida. Uranium is found in sandstone and phosphate rock ground waters primarily in western states. Radon occurs much more frequently in drinking waters and has been found in most regions of the country.

Presently, Federal regulations have established maximum contaminant levels (MCLs) only for radium, gross alpha radiation and beta/photon emitters. In 1976, a drinking water standard for combined radium of 5 picocuries per liter (pCi/L) was set by the U.S. EPA. It was estimated that 1,000 community water supplies would exceed the radium standard in the U.S.; most of which were groundwater systems with capacities of 0.5 million gallons per day or less. No Federal MCLs have been promulgated for radon or for natural uranium, although standards are under development. In addition, waste containing more than 0.05 percent of natural uranium may be regulated as a "source material" under the Atomic Energy Act. Because of existing regulations, radium contamination will be the focus of this section.

In 1990, the EPA issued guidance entitled "Suggested Guidelines for the Disposal of Drinking Water Treatment Wastes Containing Naturally Occurring Radionuclides." That guidance was designed to provide water suppliers and state and local governing agencies with some assistance. The guidance provided recommendations and summarized existing regulations and criteria used by EPA and other agencies in addressing the disposal of radionuclides generated by industries other than the water treatment industry. Because this guidance is not regulation and regulations vary from state to state, water suppliers should contact radiation and drinking water authorities within their state for more specific information.

A water supply system with radium levels that exceed regulations has several options to bring the radium levels below the Federal MCLs. The supply can develop a new water source, dilute the radium rich water with less rich water from another source, or treat the water to reduce radium levels. A water treatment plant should carefully study the cost and feasibility of radium removal and disposal of radium-contaminated sludges before choosing to install a radium removal treatment technology.

14.2 RADIUM REMOVAL

Treatment processes that remove radium from drinking water include lime softening, ion exchange, reverse osmosis, manganese green sand filters, and radium selective resins. These processes have 80 to 98 percent removal efficiencies and concentrate the radium removed from the treated water in the backwash, brine, and sludge wastes.

Radium wastes generated by drinking water treatment are identified as naturally occurring radioactive material (NORM). The United States does not have Federal regulations governing the disposal of NORM. The United States Nuclear Regulatory Commission (NRC) is mandated to regulate the disposal of high-level and low-level radioactive wastes generated in the United States. The disposal of NORM is not licensed by the NRC because it is not a manmade radioactive waste and does not fall under NRC jurisdiction. The EPA has proposed standards to control the disposal of NORM wastes with radionuclide concentrations greater than 2000 pCi/g (dry weight). Individual states also have proposed regulating the handling and disposal of NORM. Presently, there are no state or Federal regulations governing the disposal of radioactive water treatment wastes and it may be several years before proposed regulations are adopted. However some states, including Texas, Louisiana, Wisconsin, and Colorado, have disposal regulations that pertain to Naturally Occurring and Accelerator-Produced Materials (NARM) that limit the discharge of wastes containing radionuclides into the environment.

The radium content in wastes generated by water treatment processes will depend upon the type of wastes, removal efficiency of the process, and the volume of waste generated. Filter backwash water will have little or no elevated radium concentrations. Brines generated from reverse osmosis and ion exchange methods will have a wide variety of radium concentrations. Sludge and solid wastes will have the greatest radium concentrations.

14.3 LOW-LEVEL RADIOACTIVE WASTE DISPOSAL

There are several disposal options for NORM wastes generated by water treatment plants. Most of these disposal methods, including direct discharge to surface waters, discharge to sanitary sewers, land application, and landfilling have been discussed in detail in previous sections. When state and local regulations permit disposal of water treatment plant NORM by these methods, the costs of disposal should be similar to non-NORM sludge disposal costs. One additional disposal option, sending wastes to a low-level radioactive disposal site, has not been mentioned previously and will be discussed in detail here. It should be noted that this will usually be a final option for a water treatment plant that cannot develop a new water source or dilute the radium-rich water with less rich water from another source.

For plants that do not have alternative water sources or cannot reduce the radium in their source by dilution, radium containing waste will require disposal. It is assumed that the final disposal product will consist of a resin or filter media used specifically to capture the radium in the feed water rather than the brine or sludge resulting from more general water treatment. The brines and sludges should not require this special disposal since the radium concentration in these wastes is typically below regulated levels. Consequently, the waste volumes will be significantly lower than those specified for general water treatment.

There are currently three low-level radioactive waste disposal sites operating in Nevada, South Carolina, and Washington, and one NORM disposal site operating in Utah. Each low-level site bases waste disposal costs on several factors including state of origin of the waste, type of

waste, and measured radioactivity at the container surface. All disposal facilities are located in a regional pricing compact. The Low-Level Radioactive Waste Policy Amendments Act (LLRWPAA) of 1985 authorized the formation of regional compacts and a system of incentives and penalties to ensure that states and compacts will be responsible for their own waste after January 1, 1993. States located in a compact with an operational waste disposal facility pay the lowest disposal costs while states located outside of the compacts with disposal facilities pay a disposal surcharge of $40 or $120 per cubic foot (approximately $300 to $900 per 55-gallon drum). The NORM disposal site is not part of a pricing compact and does not add surcharges.

Most water byproduct treatment processes do not generate wastes with radiation levels high enough to be classified as a low-level radioactive waste and that possibility should be minimized through proper treatment design. In some instances, a treatment process may concentrate the radionuclides in activated carbon or in a highly selective resin to levels necessitating disposal at a low-level or NORM site. The choice of a disposal location for NORM is made by the waste generator or by a state regulatory agency.

Several steps must be taken when disposing of a radioactive waste solid to meet the requirements of the disposal facility and the various regulating agencies. First, a low-level or NORM disposal site that will accept the waste is located. Second, all free standing liquids are removed. Third, materials are packaged in 55-gallon drums with 4 mil liners. Fourth, all necessary permitting, shipping, and packaging paperwork is completed and finally, the drums are sent to the disposal site by a Department of Transportation (DOT)-approved carrier with proper care and instructions.

There are several ways a small volume waste generator can arrange for the disposal of wastes at a low-level or NORM site. A small volume waste generator can package the waste materials themselves. After packaging, a collection service (such as those that pick up radioactive wastes from hospitals) can be contracted to pick up the drums, perform a radiation

survey, complete the labelling and paperwork, and deliver the drums to the disposal site. If a waste generator does not want to be involved in the waste packaging and disposal, a broker can be hired to complete the process. Brokers will send trained personnel to solidify or absorb and package all materials. The broker will arrange for transportation and disposal and complete all necessary paperwork. The broker's charges cover all costs including mobilization, transportation of packaged drums, and disposal. Brokers also can be hired to provide oversight and permitting expertise while the waste generators supply the labor and materials necessary for packaging.

14.4 COST INFORMATION

Radioactive waste disposal costs are not included within this report. These costs may be obtained from EPA's guidance entitled "Suggested Guidelines for the Disposal of Drinking Water Treatment Wastes Containing Naturally Occurring Radionuclides" that is scheduled for release in 1993. This revision of the Guidelines, which originally were issued in 1990, will provide cost-related information, recommendations, and a summary of existing regulations and criteria used by EPA and other agencies in addressing the disposal of radionuclides.

15.0 REFERENCES

Ag-Chem Equipment; contacted by Allan Timm and Mary Rooney, DPRA. Concerning terragators. 29 July 1992.

American Water Works Association. Sludge: Handling and Disposal. Denver, CO: American Water Works Association, 1989.

American Water Works Association. Handbook: Water Treatment Plant Waste Management. 1987

American Water Works Association. Slib, Schlamm, Sludge. KIWA Ltd., 1990.

Aquino, John T. "NSWMA Releases Expanded Tipping Fee Survey." Waste Age. December 1991, pp. 24-28.

Camp, John, Rain for Rent; contacted by Kristina Uhlig, DPRA. Concerning sprinkler systems. 21 August 1992.

Clark, Viessman, Hammer. Water Supply and Pollution Control. Harper and Row. 1977.

Clingingsmith, Larry, C.P. Environmental; contacted by Mary Rooney, DPRA. Concerning lagoon dredging costs. 19 August 1992.

Fraigh, Al, American Materials Corporation; contacted by Mary Rooney, DPRA. Concerning sand and gravel costs. 23 August 1992.

Gavzonetti, Gary, Centrisys Corporation; contacted by Mary Rooney, DPRA. 13 August 1992. Contacted by Allan Timm, DPRA. 28 August 1992. Concerning centrifuge applications and cost.

Gregory, Sue, Biogro; contacted by Kristina Uhlig, DPRA. Concerning liquid and dewatered sludge land application costs. 18 August 1992.

Gross, Rod, Envirex, Inc.; contacted by Mary Rooney, DPRA. Concerning gravity thickener application and costs. 24 August 1992.

Gruidi, Dan, Robert D. Hill; contacted by Mary Rooney, DPRA. Concerning density of granular salt. 30 July 1991.

Gumerman, Robert C., Bruce E. Burris, and Sigurd P. Hanser. Small Water Treatment System Costs. Park Ridge, NJ: Noyes Data Corporation, 1986.

Hahn, Norman, Wisconsin Department of Natural Resources; contacted by Mary Rooney, DPRA. Concerning radioactive sludge disposal options. 22 July 1992.

Hahn, Norman. "Disposal of Radium Removal from Drinking Water." American Water Works Association Journal, 1986, pp. 137-144.

Haraldson, Gary, Lakewood Water Treatment Plant; contacted by Mary Rooney, DPRA. Concerning use of sand drying beds. 11 August 1992.

Hill Reference Library; contacted by Greg Kvaal, DPRA. Concerning bulk and bagged lime costs. 19 August 1992.

Hoeft, Mark, J&M Custom Waste; contacted by Kristina Uhlig, DPRA. Concerning liquid sludge land application costs. 17 August 1992.

Huffman, Tom, Hydro Engineering Inc.; contacted by Kristina Uhlig, DPRA. 19 August 1992. Contacted by Allan Tim, DPRA. 31 July 1992. Concerning sprinkler systems.

Koeckeritz, Orn, Koeckeritz Excavating; contacted by Kristina Uhlig, DPRA. Concerning septic field design and cost. 21 August 1992.

Krall, Tom, Mobile Dredging and Pumping; contacted by Mary Rooney, DPRA. Concerning lagoon dredging costs. 26 August 1992.

Kramer, Brian, Metro Ag Inc.; contacted by Kristina Uhlig, DPRA. Concerning liquid and dewatered sludge land application costs. 20 August 1992.

Krizan, William. "Second Quarterly Cost Report." Engineering News-Record, 29 June 1992, p. 33.

Kuehne, Susan, Star Systems Filtration Division; contacted by Mary Rooney, DPRA. Concerning filter press costs. 17 August 1992.

Lowry, Jerry, Lowry Engineering; contacted by Mary Rooney, DPRA. Concerning low-level radioactive water disposal options. 21 July 1992.

Meltzer, Jim, Northern Gravel Co.; contacted by Mary Rooney, DPRA. Concerning sand and gravel costs. 4 August 1992.

Metcalf & Eddy, Inc. Wastewater Engineering: Treatment, Disposal, Reuse. 2nd ed. Boston, MA: McGraw-Hill, 1972.

Minnesota Pollution Control Agency, Water Quality Division. Individual Sewage Treatment Systems Standards - Chapter 7080. July 1989.

Mueller, Donald, LWT Inc.; contacted by Mary Rooney, DPRA. Concerning lagoon dredging costs. 26 August 1992.

Nidetz, Jeff, Cyrigan; contacted by Mary Rooney, DPRA. Concerning reverse osmosis and ion exchange treatment processes. 12 August 1992.

Nuclear Regulatory Commission Information Digest, 1992 Edition. NUREG-1350, Volume 4. March 1992.

Ohio River Valley Water Sanitation Commission. A Study of Wastewater Discharges from Water Treatment Plants. April 1981.

Parrotta, Marc. "Radioactivity in Water Treatment Wastes: A USEPA Perspective." American Water Works Association Journal, April 1991, p. 134

Parrotta, Marc, US EPA; contacted by Pat Martz Kessler, DPRA. Concerning the Suggested Guidelines for the Disposal of Drinking Water Treatment Wastes Containing Naturally Occurring Radionuclides. March 3, 1993.

Peterson, Bruce, Peterson Ag Service; contacted by Kristina Uhlig, DPRA. Concerning liquid sludge land application costs. 18 August 1992.

Pinkey's; contacted by Mary Rooney, DPRA. Concerning septic tank cleaning. 28 August 1992.

R.S. Means Company, Inc. 1992 Means Site Work and Landscape Cost Data. 11th ed. Kingston, MA: Construction Consultants and Publishers, 1991.

R.S. Means Company, Inc. 1992 Means Mechanical Cost Data. 15th ed. Kingston, MA: Construction Consultants and Publishers, 1991.

R.S. Means Company, Inc. 1992 Means Building Construction Cost Data. 50th ed. Kingston, MA: Construction Consultants and Publishers, 1991.

Richardson Engineering Services, Inc. Process Plant Construction Estimating Standards, Mechanical and Electrical. Vol. 4. Mesa, AZ. 1990.

Richardson Engineering Services, Inc. Process Plant Construction Estimating Standards, Process Equipment. Vol. 4. Mesa, AZ. 1990.

Robertson, R.F. and Y.T. Lin. "Filter Washwater and Alum Sludge Disposal: A Case Study." Proceedings AWWA Seminar on Water Treatment Waste Disposal Seminar, (June 25, 1978), 4, 1-8.

Sadowski, Greg, Sharples/ALFA-LAVAL Company; contacted by Mary Rooney, DPRA. Concerning scroll centrifuge costs. 19 August 1992.

Tabor, Paul, Simpson Filtration Inc., contacted by Allan Timm, DPRA. Concerning filter press costs. 29 July 1992.

U.S. Environmental Protection Agency, Center for Environmental Research Information. Process Design Manual - Land Treatment of Municipal Wastewater. EPA-625/1-81-013. October 1981.

U.S. Environmental Protection Agency, Office of Drinking Water. Radionuclide Removal for Small Public Water Systems. EPA 570/9-83-010. June 1983.

U.S. Environmental Protection Agency, Office of Research and Development. Design Manual - Onsite Wastewater Treatment and Disposal Systems. EPA-625/1-80-012. October 1980.

U.S. Environmental Protection Agency, Office of Research and Development. Innovative and Alternative Technology Assessment Manual. EPA-430/9-78-009. February 1980.

U.S. Environmental Protection Agency, Office of Research and Development. Process Design Manual - Land Application of Municipal Sludge. EPA-625/1-83-016. October 1983.

U.S. Environmental Protection Agency. The Cost Digest: Cost Summaries of Selected Environmental Control Technologies. Prepared by Radian Corporation for the Office of Research and Development. EPA-600/8-84-010. October 1984.

U.S. Environmental Protection Agency. Waste By Products Document in Support of Drinking Water Treatment BAT Cost Analyses. Prepared by Malcolm Pirnie, Inc. for the Office of Drinking Water. April 1990.

U.S. Environmental Protection Agency, Office of Drinking Water. Technologies for Upgrading Existing or Designing New Drinking Water Treatment Facilities. EPA/625/4-89/023. March 1990.

U. S. Nuclear Regulatory Commission. Regulating the Disposal of Low-Level Radioactive Waste. A Guide to the Nuclear Regulatory Commission's 10 CFR Part 61. Office of Nuclear Material and Safeguards.

Vetter, Gerry, Carylon Company; contacted by Kristina Uhlig, DPRA. Concerning dewatered sludge land application costs. 26 August 1992.

Viessman, Warren, Jr., et al. Introduction to Hydrology. 2nd Ed., New York, NY: Harper & Row, 1977.

"Wage Rates for Key Construction Trades." Engineering News - Record, 29 June 1992, p. 57.

Webber, Mike, Farmers Union Co-Op; contacted by Kristina Uhlig, DPRA. Concerning liquid sludge land application costs. 17 August 1992.

Wilcox, Terry, Walder Pump and Equipment; contacted by Mary Rooney, DPRA. Concerning application of gravity thickeners. 24 August 1992.

APPENDIX A

POTW CHARGES

APPENDIX A

POTW CHARGES

The POTW charges presented in Chapter 9 of this document are based on a limited sampling of POTW rates conducted for this analysis and a survey published by the League of Minnesota Cities. Table 1 presents the results of the telephone sample and Table 2 presents selected results from the League of Minnesota Cities Survey. Ten of the cities contacted during the telephone sample do not charge to accept wastes from water treatment plants; three were not certain. In addition, some of the POTWs contacted during the telephone sample and by the League of Minnesota Cities charge a flat rate per month with no additional charges for higher flow rates.

TABLE 1

SEWER RATES - LARGE CITIES
TELEPHONE SAMPLE

City	State	Population	Sewage Fee Charged	BOD	TSS	Misc.
Little Rock	Arkansas	175,818	$1.42/1,000 gallons + monthly service charge	>300 ppm: $.092/pound	>300 ppm: $.0883/pound	Oil & grease >100 ppm: $.047/pound
Tucson	Arizona	405,390	Varies per industry		*	COD: *
Chula Vista	California	138,000	$16.70/month		0-200 ppm: $1.97/1,000 gallons 200-499 ppm: $2.42/1,000 gallons >500 ppm: $3.26/1,000 gallons	
Denver	Colorado	467,610	$1.65/1,000 gallons	**	**	Pre-treatment: $450/million gallons for metal treating facilities $250/million gallons for other significant industries
Derby	Connecticut	12,346	$.82/gallon (Commercial) $.74/gallon (Industrial)	No surcharge	No surcharge	
Boca Raton	Florida	49,505	$1.70/1,000 gallons	No surcharge	No surcharge	$.25/gallon surcharge outside city limits
Lewiston	Idaho	27,986	$1.47/1,000 gallons	$.12/pound	$.11/pound	Industry surcharge: $.09/1,000 gallons

TABLE 1

SEWER RATES - LARGE CITIES
TELEPHONE SAMPLE
(continued)

City	State	Population	Sewage Fee Charged	BOD	TSS	Misc.
Anderson	Indiana	64,695	$2.57/1,000 gallons	>300 ppm: $.14/pound	>300 ppm: $.12/pound	Billing charge: $.77/month
Ft. Scott	Kansas	8,893	<2,244 gallons: $6.16/month 2,244+ gallons: $1.18/1,000 galons	No surcharge	No surcharge	
Bloomington	Minnesota	81,831	$1.53/1,000 gallons	No surcharge	No surcharge	
Duluth	Minnesota	85,000	$4.25 + $2.32/1,000 gallons	+	+	+
Minneapolis	Minnesota	370,951	$2.21/1,000 gallons		>250 ppm: $.106/pound	MPCA charge for non-residential: $25/month COD >250 ppm: $.053/pound
Bozeman	Montana	24,500	$3.95 + $.87/1,000 gallons	No surcharge	No surcharge	
Fargo	North Dakota	76,000	$.70/1,000 gallons (Minimum: $7.70/month)	No surcharge	No surcharge	
Salem	Oregon	100,000	$.41/1,000 gallons	$.15/pound	$.117/pound	$1.55 billing charge $108/diameter inch mile

TABLE 1

SEWER RATES - LARGE CITIES
TELEPHONE SAMPLE
(continued)

City	State	Population	Sewage Fee Charged	BOD	TSS	Misc.
Richmond	Virginia	219,214	$1.79/1,000 gallons	>250 ppm: $12.82/hundred-weight	>275 ppm: $14.84/hundred-weight	
Seattle	Washington	493,846	$3.42/1,000 gallons	>300 ppm: $.093/pound	>400 ppm: $.14/pound	Metals: $.000806/gallon Oils, grease, fats: $.000124/gallon

* If average TSS & COD are exceeded, a high strength factor ranging from $1.00 to $3.78 is assessed.

** V_c X 8.34 [(.142)(BOD-220)] + [(.10)(TSS-250)]

\+ Surcharges unknown

TABLE 2

SEWER RATES - LARGE CITIES
LEAGUE OF MINNESOTA CITIES SURVEY

City	State	Population	Sewage Fee Charged	Misc.
Benson	Minnesota	3,656	$2.47/1,000 gallons	
Wadena	Minnesota	4,699	$1.55/1,000 gallons	Minimum: $6.23
Ely	Minnesota	4,820	$2.62/1,000 gallons	Minimum: $7.84 Connection charge: $75 digging fee
Chisholm	Minnesota	5,930	$.90/1,000 gallons	
Arden Hills	Minnesota	8,012	$1.64/1,000 gallons	
Andover	Minnesota	9,387	Varies for "area"; ranges between $4.50 and $8.50/month	
Bemidji	Minnesota	10,949	Flat rate ranges between $4.45 and $44.00	
Owatonna	Minnesota	18,632	$2.50/month + $1.78/1,000 gallons	Minimum: $2.50
Albert Lea	Minnesota	19,200	$3.65/month	$14 connection charge if turned off
Mankato	Minnesota	28,651	$.86/unit	
Burnsville	Minnesota	35,674	Commercial: 90% of winter water usage or metered water	Connection charge: $168/unit
Duluth	Minnesota	92,811	$3.75/month + $1.72 to $2.99/1,000 gallons	

TECHNICAL REPORT DATA
(Please read Instructions on the reverse before completing)

1. REPORT NO. EPA 811-D-93-002	2.	3. RECIPIENT'S ACCESSION NO.
4. TITLE AND SUBTITLE Large Water System Byproducts Treatment and Disposal Cost Document		5. REPORT DATE April 1993
		6. PERFORMING ORGANIZATION CODE EPA/OGWDW
7. AUTHOR(S) DPRA Incorporated		8. PERFORMING ORGANIZATION REPORT NO.
9. PERFORMING ORGANIZATION NAME AND ADDRESS DPRA Incorporated E-1500 First National Bank Building 332 Minnesota Street St. Paul, MN 55101		10. PROGRAM ELEMENT NO.
		11. CONTRACT/GRANT NO. 68-C0-0020
12. SPONSORING AGENCY NAME AND ADDRESS		13. TYPE OF REPORT AND PERIOD COVERED
		14. SPONSORING AGENCY CODE
15. SUPPLEMENTARY NOTES Ben Smith-Project Manager		

16. ABSTRACT

This document provides a summary of techniques for projecting the costs of drinking water treatment residuals treatment and disposal. It is a generalized report developed for use in the evaluation of prospective drinking water regulatory alternatives. Its focus is on systems serving water to over 3300 people.

17. KEY WORDS AND DOCUMENT ANALYSIS

a. DESCRIPTORS	b. IDENTIFIERS/OPEN ENDED TERMS	c. COSATI Field/Group
drinking water treatment costs, residuals management costs, regulatory impact costing		

18. DISTRIBUTION STATEMENT	19. SECURITY CLASS *(This Report)*	21. NO. OF PAGES 138
	20. SECURITY CLASS *(This page)*	22. PRICE

EPA Form 2220-1 (Rev. 4-77) PREVIOUS EDITION IS OBSOLETE