WAT EPA
EPAX 530
9110- PB5.3
0085
C.2

DRAFT

#2 9/17

ALTERNATIVE CONVEYANCE SYSTEM REPORT

VACUUM SYSTEMS

RICH NARET

HEADQUARTERS LIBRARY
ENVIRONMENTAL PROTECTION AGENCY
WASHINGTON, D.C. 20460

DEC 1 1991

ALTERNATIVE CONVEYANCE SYSTEM (ACS) REPORT OUTLINE

I. OVERVIEW OF ALTERNATIVE CONVEYANCE SYSTEMS

A. Introduction

B. Pressure Systems

1. Simplified System Description
   a. Basic System Sketch
   b. Components
   c. Operation
2. Potential Applications
3. Extent of Use in the U.S.
4. Myths vs Reality
5. Other

BONNE

C. Vacuum Systems

1. History
   a. System Types
   b. System Comparison
      Services
      Collection Piping
      Vacuum Station
   c. Summary

NARET

2. Simplified System Sketch
   a. Basic System Sketch
   b. Components
      Services
      Collection Piping
      Vacuum Station
   c. Operation
3. Potential Applications
4. Extent of Use in the U.S.
5. Myths vs Reality

D. Small Diameter Gravity Sewers

1. Simplified System Description
   a. Basic System Sketch
   b. Components
   c. Operation
2. Potential Applications
3. Extent of Use in the U.S.
4. Myths vs Reality
5. Other

OTS

E. Comparison with Conventional Collection Systems

 Bowne

III. VACUUM SEWER SYSTEMS

A. Introduction

B. System Plan and Elevation Views

C. Description of All System Components

1. Services
2. Collection Piping
3. Vacuum Station

D. System Design Considerations

1. Hydraulics

a. Design Flows and Their Variabilities
Average Daily Flows
Peak Flows
Design Flows

b. Minimum Flow Velocities in Pipes
c. Applicable Equations
Static Losses
Friction Losses

NABET

2. Mains, Services, and Building Sewers

a. Mains
Geometry
Pipe Sizing
Routing
Trench Section
Pipe Materials

b. Services
Geometry
Pipe Sizing
Routing
Trench Section
Pipe Materials

c. Building Sewer

3. Valve Pit Settings

a. General
Fiberglass Settings
Concrete Settings

b. Appurtenances
Anti-Flotation Collars

4. Vacuum Valves

   a. General
      - Model D
      - Model S

   b. Appurtenences
      - External Breather
      - Auxiliary Vent
      - Cycle Counter

5. Division Valves and Cleanouts

   a. Division Valves
   b. Cleanouts

6. Odors and Corrosion

7. Vacuum Station Design

   a. Component Sizing
      - Vacuum Pump Sizing
      - Discharge Pump Sizing
      - Collection Tank Sizing
      - Reservoir Tank Sizing
      - System Pump-Down Time

   b. Typical Component Specifications
      - Vacuum Pumps
      - Discharge Pumps
      - Vacuum Tanks
      - Standby Generator
      - Station Piping
      - Motor Control Center
      - Level controls
      - Telephone Dialer
      - Vacuum Gauges
      - Vacuum Recorder
      - Sump Valve

NARET

E. Construction Considerations

1. Line Changes
2. Grade Control
3. Service Connections
4. Equipment Substitutions
5. Testing
   a. General
   b. Vacuum Station
   c. Collection Piping

6. Past Construction Problems

F. Operation and Maintenence Considerations

1. O&M Manual
2. Staffing Requirements
   a. General Information
   b. Operator Responsibility

NARET

3. Operator Training
4. Spare Parts Inventory
5. As-Built Drawings and Mapping
6. Maintenance
   a. Normal Maintenance
   b. Preventive Maintenance
   c. Emergency Maintenance

7. Record Keeping
8. Troubleshooting
9. Evaluation of Operating Systems
   a. Early Vacuum Systems
   b. Recent Vacuum Systems
      General Information
      Design/Construction Data
      O&M Data
   c. Summary

10. Past Operating Problems

G. System Costs

1. Construction Costs
2. O&M Costs
   a. Labor
   b. Clerical
   c. Power
   d. Utilities
   e. Transportation
   f. Supplies/Maintenance
   g. Miscellaneous Expenses
   h. Equipment Renewal & Replacement
   i. Future Service Connections

3. User Charges/Assessments

H. System Management Considerations NARET

1. Homeowner Responsibilities
2. Sewer Utility Responsibilities
3. Other Entities

IV. SMALL DIAMETER GRAVITY SYSTEM-UTTS

V. DESIGN EXAMPLE

1. Pressure Sewer System
2. Vacuum Sewer System ← NARET
3. Small Diameter Gravity System

L I S T O F F I G U R E S

Fig. #	Description	Chapter	Section	Page
1	Liljendahl-Electrolux Vacuum System	I	C	2
2	Vacuum Toilet	I	C	3
3	Colt-Envirovac Vacuum System	I	C	4
4	AIRVAC Vacuum System	I	C	5
5	Major Components of a Vacuum Sewer System	I	C	12
6	Valve Pit/Sump Arrangement	I	C	14
7	Upgrade/Downgrade/Level Transport	I	C	16
8	Diagram of a Typical Vacuum Station	I	C	18
9	Early Design Concept-Reformer Pockets	I	C	21
10	Current Design Concept-Pipe Bore Not Sealed	I	C	22
11	Sample Gravity Sewer System	I	C	28
12	Vacuum Assisted Gravity Sewer	I	C	29
13	Basement/Valve Pit/Main Relationship	I	C	33
1	Typical Layout-Vacuum Sewer System	III	A	2
2	Water System/Vacuum System Similarities	III	A	3
3	Plan & Profile View-Typical Vacuum Line	III	B	1
4	Plan & Profile View-Typical Valve Pit	III	B	2
5	Auxiliary Vent Location	III	C	3
6	Lift Detail	III	C	5
7	Line Diagram of a Typical Vacuum Station	III	C	8
8	Liquid Ring Vacuum Pump-Cross Section	III	C	10
9	Sliding Vane Vacuum Pump-Cross Section	III	C	11
10	AIRVAC Calculation Form	III	D	9
11	Static Loss Determination in a Lift	III	D	10
12	Spigot Adaptor Detail	III	D	25
13	Crossover Connection Detail	III	D	27
14	Typical Fiberglass Valve Pit Setting	III	D	32
15	Shallow Fiberglass Pit Arrangement	III	D	35
16	Typical Concrete Valve Pit Setting	III	D	37
17	Typical Concrete Buffer Tank	III	D	38
18	Typical Concrete Dual Buffer Tank	III	D	39
19	Anti-flotation Collar Detail	III	D	40
20	Model D Valve	III	D	43
21	Model S Valve	III	D	45
22	Early External Breather Detail	III	D	48
23	Alternative External Breather Detail	III	D	49
24	AIRVAC External Breather Detail	III	D	50
25	Auxiliary Vent Detail	III	D	51
26	Division Valve with Gauge Tap Detail	III	D	55
27	Access Point Detail	III	D	56
28	NPSHa Calculation Diagram w/Typical Values	III	D	63
29	Typical Elevations of Level Control Probes	III	D	75
30	Effect of Temperature Change on Vacuum Testing	III	E	7

LIST OF TABLES

Table #	Description	Chapter	Section	Page
1	Vacuum Collection System Parameters	I	C	6
2	Vacuum Station Parameters	I	C	10
3	Summary of System Types	I	C	11
4	Conditions Conducive To Vacuum Sewer Selection	I	C	23
5	Operating Vacuum System in The U.S.	I	C	24
1	Recommended Lift Height	III	D	10
Main Line Design Parameters		III	D	13
3	Guidlines for Determining Line Slopes	III	D	14
4	Governing Distances for Slopes Between Lifts	III	D	14
5	Maximum Flow for Various Pipe Sizes	III	D	15
6	Maximum Number of Homes Served For Various Pipe Sizes	III	D	15
7	Typical Requirements For Separation Of Sewer Lines From Water Lines	III	D	19
8	Service Line Design Parameters	III	D	27
9	Situations That Dictate The Use Of Concrete Valve Pit Settings	III	D	36
10	Vacuum Station Design Nomenclature	III	D	59
11	"A" Factor For Use In Vacuum Pump Sizing	III	D	60
12	Discharge Pump NPSH Calculation Nomenclature	III	D	62
13	Typical Values For NPSH Calculations	III	D	62
14	Values of Vo For A 15 Minute Cycle @ Qmin For Different Peaking Factors	III	D	64
15	Spare Parts List Per Every 50 Valves	III	F	9
16	Specialty Tools And Equipment For Collection System	III	F	10
17	Specialty Equipment For Vacuum Station	III	F	10
18	Operating Systems Visited in 1989	III	F	30
19	General Information On Operating Systems	III	F	31
20	Design/Construction Data-Collection System	III	F	32
21	Design/Construction Data-Vacuum Station	III	F	33
22	Operation & Maintenance Data-General Info	III	F	34
23	Operation & Maintenance Data-ManHours/Year	III	F	35
24	Operation & Maintenance Data-Power/Year	III	F	35
25	Operation & Maintenance Data-MTBSC	III	F	35
26	Classification of Operating Problems	III	F	37
27	Typical O&M Cost Components	III	G	5
28	Manhour Estimating Factors	III	G	7
29	Vacuum Station Power Consumption Estimating Factors	III	G	11
30	Typical Renewal And Replacement Factors	III	G	14
31	Annual Budget Example	III	G	18

I. OVERVIEW OF ALTERNATIVE CONVEYANCE SYSTEMS

C. VACUUM SYSTEMS

S E C T I O N C

V A C U U M S Y S T E M S

1. History of Vacuum Sewer Technology

a. System Types

Vacuum sewage collection systems were patented in the United in 1888, when Adrian LeMarquand invented a system of sewage collection by barometric depression. The first commercial applications of such systems were by the Liljendahl Corporation (now known as Electrolux) of Sweden in 1959. Since that time, three other companies have been active in this market: Colt Envirovac, Vac-Q-lec, and ATRVAC. There are significant differences among these in terms of design concepts. The major differences lie in the extent to which the systems use separate black (toilet) and gray (the balance) water collection mains. Electrolux uses a separate system for these sources; Envirovac uses vacuum toilets and one main; and ATRVAC and Vac-Q-lec take the normal household combined wastes. Other differences relate to the location of the gravity/vacuum interface and to the design of pumps, valves, lines, etc.

The Liljendahl-Electrolux system was first used in the Bahamas in the late 1960's (Figure 1). In this concept, separate black and gray water collection mains are used. Black water refers to toilet wastes and gray water includes all other domestic wastewater. The black water is discharged to one of the vacuum mains through a vacuum toilet (Figure 2) while the gray water enters the other through the use of a specially designed vacuum valve. The separate vacuum mains are connected to the vacuum station. For critically water-short areas, such as the Bahamas, the reduction in toilet wastewater volume was a definite factor in the selection of vacuum transport.

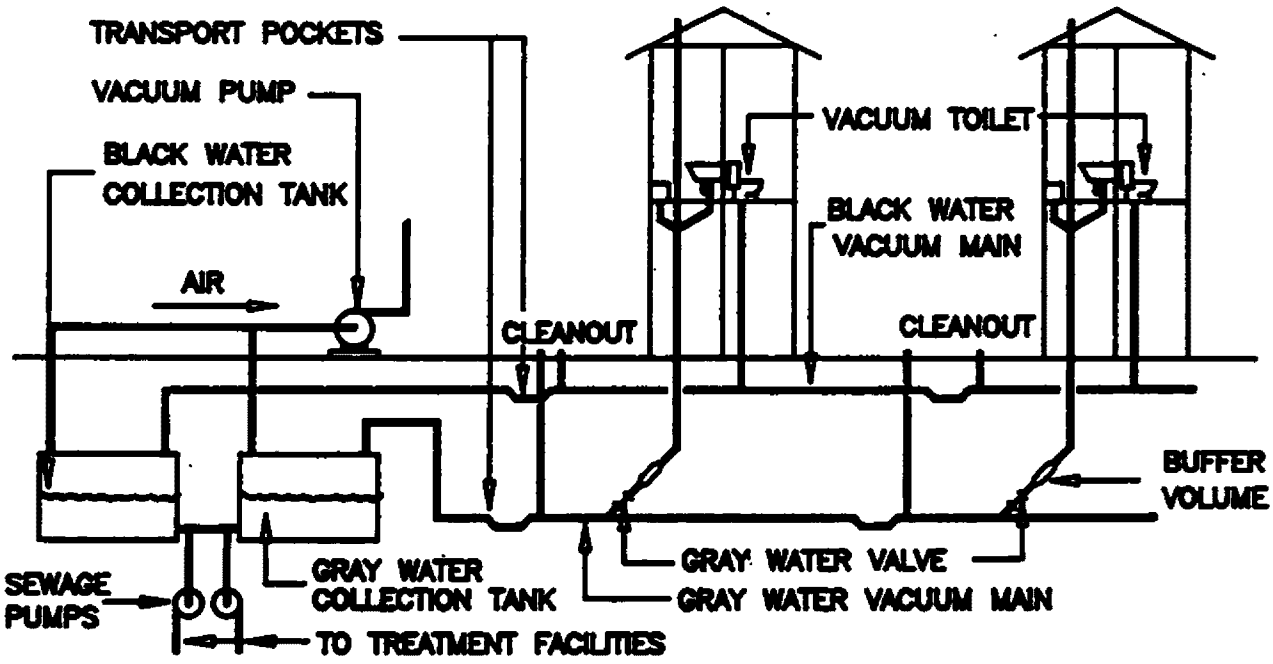

FIGURE 1
LILJENDAHL-ELECTROLUX
VACUUM SEWER SYSTEM

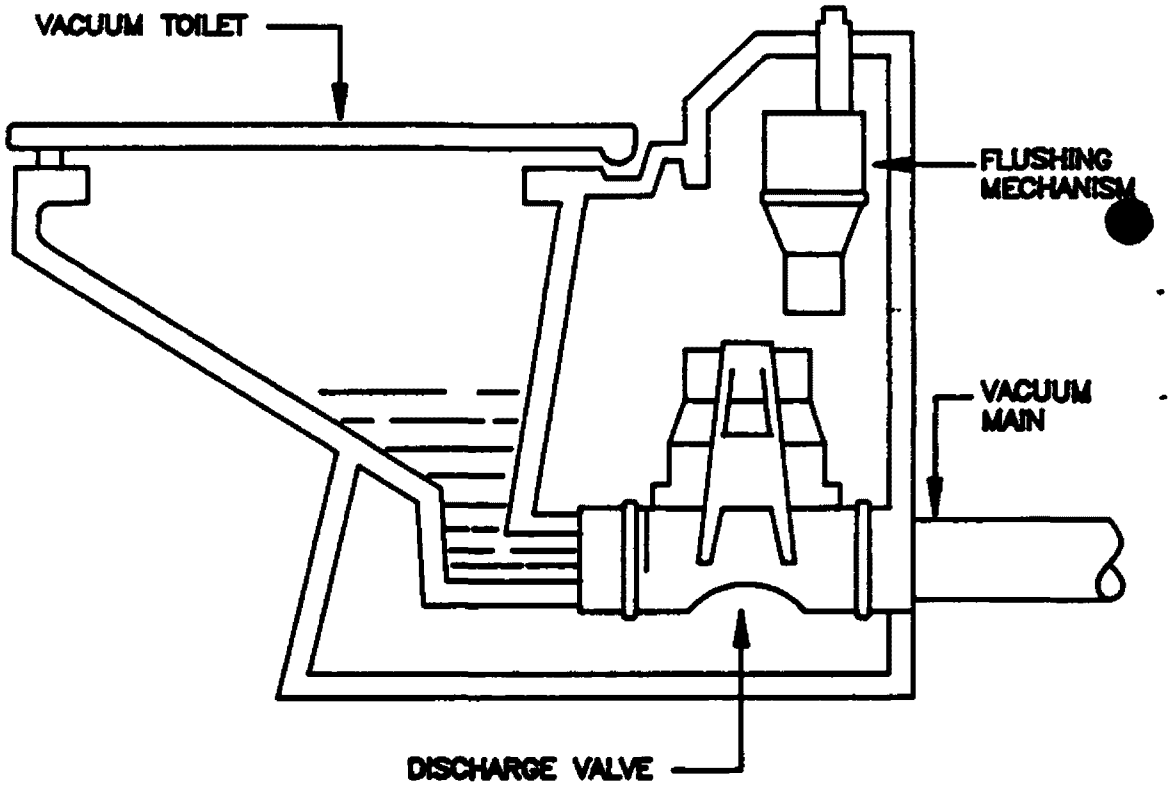

FIGURE 2
VACUUM TOILET

A Vac-Q-Tec system, serving the Lake of the Woods development near Fredericksburg, Va. was the first residential vacuum collection system in the United States. This system uses concepts of the Liljendahl system but has many important differences. The Vac-Q-Tec system requires no inside vacuum toilets or vacuum plumbing. This system employs a single combined black and gray water collection main. Large (750 gal.) storage tanks are required at each residence. Finally, an external power source is required for each valve since they are electrically operated. In addition to the Lake of the Woods system, several other Vac-Q-Tec residential systems have been used by private developers.

The Colt-Envirovac system is the direct descendent of the Liljendahl-Electrolux system (Figure 3). The Colt system at South Seas Plantation near Fort Meyers, Fla. serves 33 residences. The houses have separate black and gray water plumbing. The black water piping from the vacuum toilet joins the gray water vacuum piping immediately downstream of the gray water valve. A single pipe with the combined contents transports the wastewater to the vacuum station.

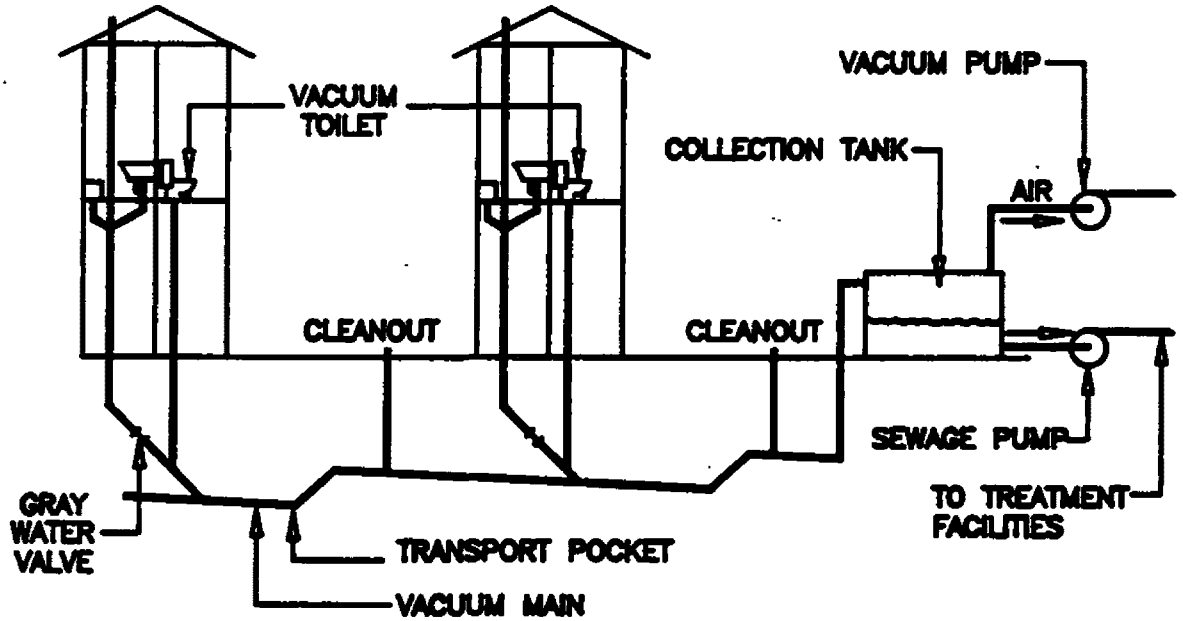

FIGURE 3
COLT-ENVIROVAC
VACUUM SEWER SYSTEM

AIRVAC markets a pneumatically controlled and operated vacuum valve which is used for combined gray and black water systems (Figure 4). The AIRVAC system allows for use of conventional plumbing in the house, with the wastewater flowing by gravity to a combined sump/valve pit. The valve starts its cycle when it senses approximately 10 gallons has accumulated in the sump. It opens for a few seconds, which is enough to evacuate the contents of the sump as well as allow atmospheric air to enter the system. The sewage/air mixture then travels to the vacuum station.

AIRVAC's first system was installed in Mathews Courthouse, Va. in 1970. Since then AIRVAC has more than 30 additional system operating in the United States with many more currently being planned, designed, or in construction. AIRVAC has also been very active in the foreign market with opeating systems in Australia, Canada, Japan, Holland, and some other European Countries.

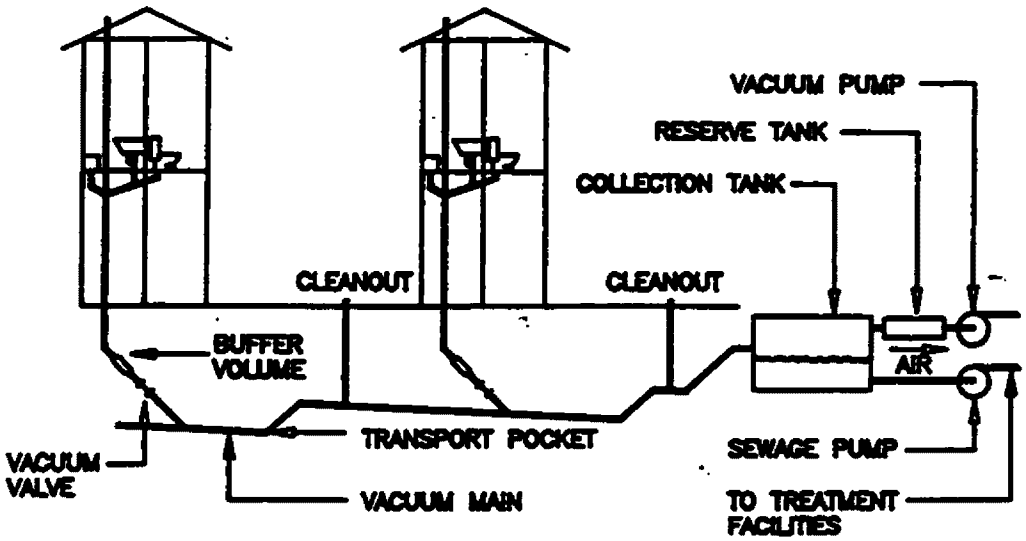

FIGURE 4
AIRVAC
VACUUM SEWER SYSTEM

b. System Comparison

Each of the four systems have unique design features. The major differences between these systems are shown in Table 1. The water saving feature of the Electrolux and Colt systems is reported to be as much as 27 percent of the total in a domestic application with the use of vacuum toilets. AIRVAC and Vac-W-Tec systems can be altered to accomodate these water saving devices.

TABLE 1

VACUUM COLLECTION SYSTEM PARAMETERS

System Type	House Piping	Valve Type	Piping Profile	Collection Line
Electrolux	Black & gray separate	Black: vacuum toilets; gray: pneumatic valves	Set configuration with traps	Black: 1-1/2" & 2"; gray: 2" & 3"; PVC solvent weld
Colt-Envirovac	Black & gray separate	Black: vacuum toilets; gray: pneumatic valves	Set configuration with traps	Single main, 3" 4", & 6"; PVC, special "O" ring
Vac-W-Tec	Conventional plumbing	Electrically actuated, pneumatic valve	Parallels terrain with traps	Single main, 4"; PVC
AIRVAC	Conventional plumbing	Pneumatic valve	Set configuration with profile changes	Single main, 4", 6", & 8"; PVC, solvent weld or "U" ring

Vacuum valves operate automatically, based on the volume of black or gray water behind the valve. Provided that sufficient vacuum is available in the main, the valves will open after a predetermined volume of wastewater has accumulated. Sewage enters the mains through these valves, followed by a volume of atmospheric air. The valve is actuated by a pneumatic controller in all systems, except the Vac-W-Tec system.

The Vac-W-Tec's gravity vacuum interface valve assembly is unique in that it requires an external power source. The valve can be monitored and operated from the vacuum station through an extra set of contacts in the controller. A separate cycling mode, called AutoClean, can be added which offers flexibilty to the Vac W Tec system. This mode locks out the accumulated volume cycle command from each valve, and subsequently operates each valve during low-flow periods. This flexibilty allows the system to store flows during peak periods and release them later during low flow periods. All of the other systems must be designed to handle peak flows. This feature does however, add costs to the base system. Also, additional operating and skilled electronics technicians are required to maintain the more complex systems

Depending on the manufacturer, the amount of water entering the system with each valve operation varies. The vacuum toilet admits approximately 0.3 to 0.4 gallons per flush, whereas the pneumatically controlled vacuum valves admit 10 to 15 gallons per cycle.

U.S. Navy research has reported that good transport characteristics are found with sufficient inlet air and small enough slug loadings for the available pressure differential to overcome the liquid's inertia. This results in rapid slug breakdown, re-establishing vacuum quickly at upstream valves.

COLLECTION PIPING

Piping profiles differ, depending on uphill, downhill, or level terrain. The pipe profiles recommended by each manufacturer also differ. Only AIRVAC has a published design manual which describes the desired piping profiles in each situation.

There have been two different concepts used in vacuum design. In the first concept, the bore of the pipe is purposely sealed during static conditions. This is accomplished through the use of reformer pockets. In the other concept, the bore of the pipe is not sealed. The reformer pocket concept has been used by all four of the manufacturers, although AIRVAC has since changed, with all of the recent systems designed using the latter principle.

All systems uses PVC pipe. Both solvent weld and gasketed O Ring pipe have successfully been used. In special cases, ductile cast iron pipe has been used.

VACUUM STATIONS

Vacuum stations, sometimes referred to as collection stations, vary from manufacturer to manufacturer. Table 2 shows the varying design parameters of each type. Electrolux and Colt vary their use of vacuum reserve tanks with each installation, while Vac-U-Tec and AIRVAC use reservoir tanks between the collection tank and the vacuum pumps. (Note: The term "reserve tank" is used by all of the manufacturers except AIRVAC which refers to this tank as a "reservoir tank".)

TABLE 2
VACUUM STATION PARAMETERS

System Type	Receiving Tank	Receiving Tank Evacuation Device	Valve Monitoring and Control Capability
Electrolux	Separate black and gray water vessels. Reserve tank use varies by installation	Sewage Pumps	No
Colt-Envirovac	Common receiving vessel. Reserve tank use varies	Sewage Pumps	No
Vac-U-Tec	One receiving vessel plus reserve tank	Pneumatic Ejectors	Yes
AIRVAC	One receiving vessel plus reservoir tank	Sewage Pumps	No

c. Summary

Four manufacturers have played a major role in the development of vacuum sewer systems. There are significant differences in overall system philosophy, design concepts, system components, and marketing approaches (Table 3). While all four were active 20 years ago in the United States, only AIRVAC has continued to place residential systems into operation on a regular basis. Some of the early systems of Colt-Environvac and Vac-W-Tec are currently being retrofitted with AIRVAC valves.

TABLE 3
SUMMARY OF SYSTEM TYPES

System Type	Target Market	Current Status	No. U.S. Systems	Design Approach
Electrolux	Residential	Sold license to to Colt in 1970's	0	In house No design manual
Colt-Environvac	Shipbuilder Industrial	Now a subsidiary of Evak	5	In house No design manual
Vac-W-Tec	Residential	Ceased operations in recent years	5	In house No design manual
AIRVAC	Residential	Active	30	Published Design manual

2. Simplified System Description

a. Basic System Sketch

Figure 5 shows the basic vacuum sewer system layout, including the major components. This layout is based on an AIRVAC type of system since it is the most common.

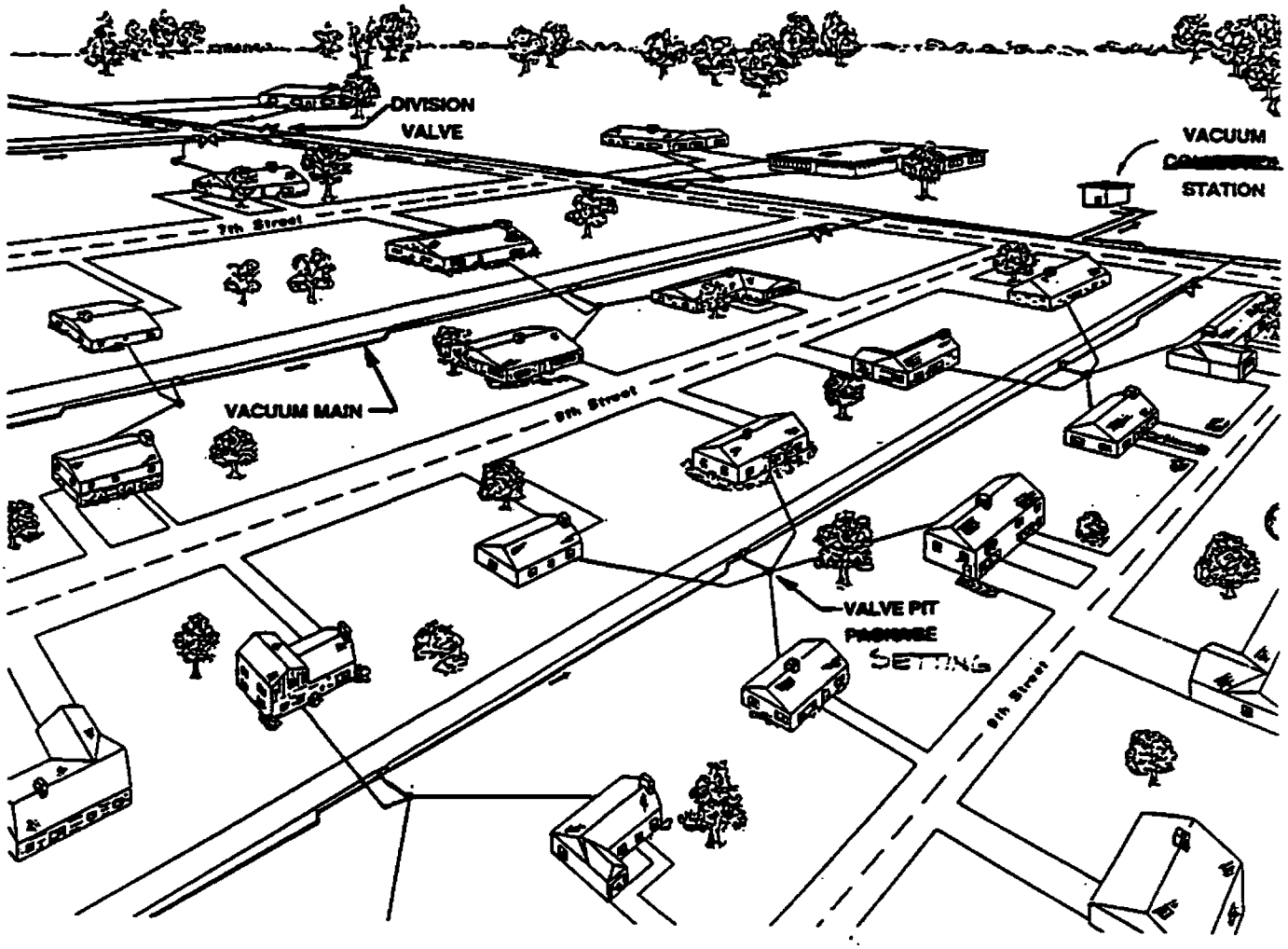

NEEDS REVISION TO SHOW VALVE PITS IN R-O-W

FIGURE 5
MAJOR COMPONENTS
OF A
VACUUM SEWER SYSTEM

REPRINTED COURTESY OF AIRVAC

b. Components

A vacuum sewer system consists of three (3) major components: the vacuum station, the collection piping, and the services. Each is described below:

SERVICES

Sewage flows by gravity from one or more homes into a 30 gallon holding tank. As the sewage level rises in the sump, air is compressed in a sensor tube which is connected to the valve controller. At a preset point, the sensor signals for the vacuum valve to open. The valve stays open for an adjustable period of time and then closes. During the open cycle, the holding tank contents are evacuated. The timing cycle is field adjusted between 3 and 30 seconds. This time is usually set to hold the valve open for a total time equal to twice the time required to admit the sewage. In this manner, atmospheric air is allowed to enter the system behind the sewage. The time setting is dependent on the valve location since the vacuum available will vary throughout the system, thereby governing the rate of sewage flow.

The valve pit typically is located along a property line. The valve pit/holding tank arrangement (Figure 6) is usually made of fiberglass, although modified concrete manhole sections have been used for special situations (deep basements, large user, pressure/vacuum interface, etc). A non-traffic lightweight aluminum or cast iron lid is available for yard installations. Where the installation will be subjected to vehicular loading, a flush mounted cast iron lid is used. In certain cases, an anti-flotation collar must be used (See Section D.3).

FIGURE 6
VALVE PIT/SUMP ARRANGEMENT

COLLECTION PIPING

The vacuum collection piping usually consists of 6-inch, and 4-inch mains, although more recent installations also include 8-inch mains in some cases. Smaller (3-inch) mains used in early vacuum systems are no longer recommended, as the cost savings of 3 inch vs 4 inch are considered to be insignificant.

Both solvent welded PVC pipe and rubber gasketed pipe has been used, although past experience indicates that solvent welding should be avoided when possible. (See Section D.2). Where rubber gaskets are used, they must be certified by the manufacturer as being suitable for vacuum service. The mains are generally laid to the same slope as the ground with a minimum slope of .2%. For uphill transport, lifts are placed to minimize excavation depth (Figure 7). There are no manholes in the system, however, access can be gained at each valve pit or at the end of a line where an access pit may be installed. Installation of the pipe and fittings follow water distribution system practices. Division valves are installed on branches and periodically on the mains to allow for isolation when troubleshooting or when making repairs. Plug valve and resilient wedge gate valves have been used

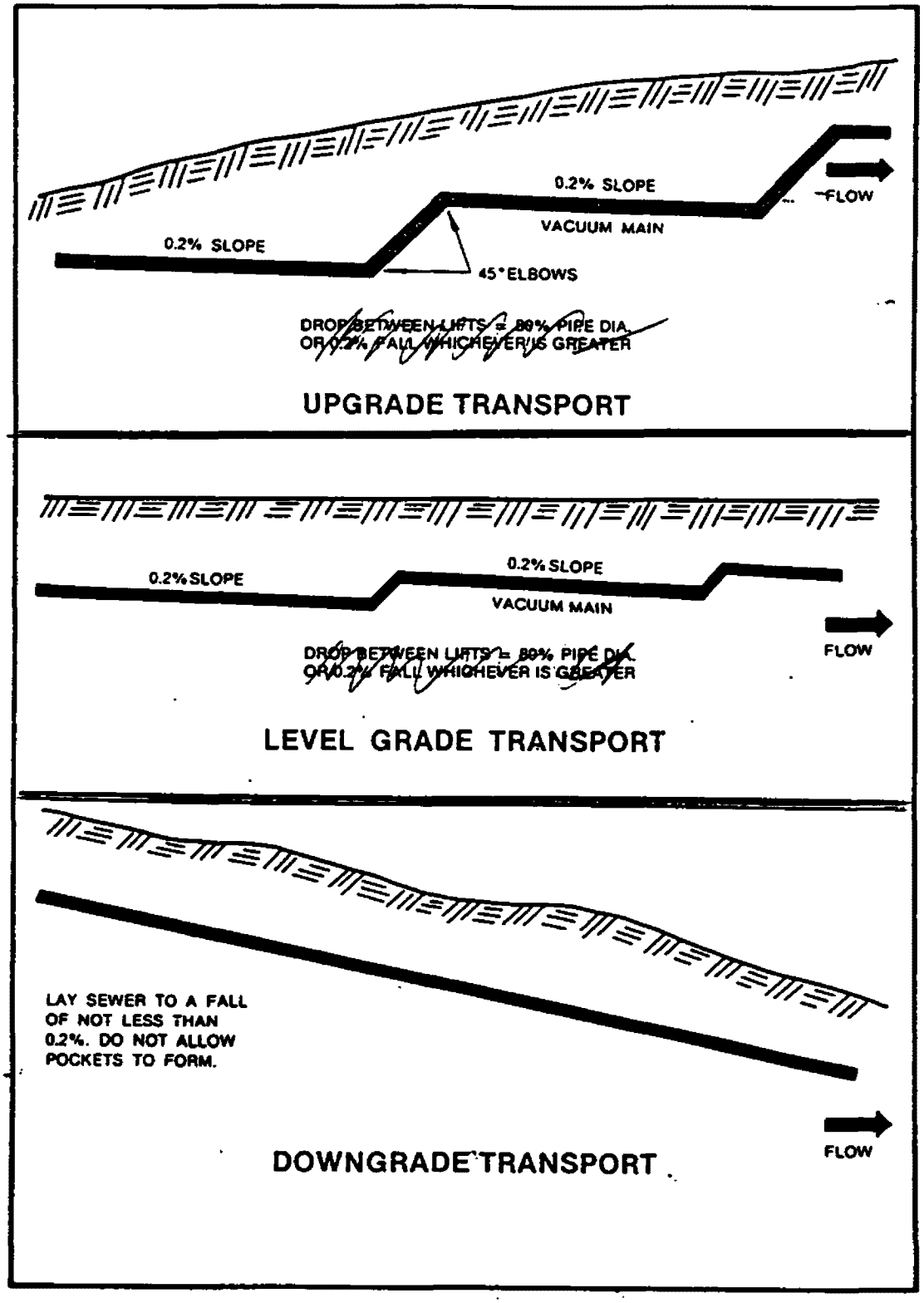

FIGURE 7
UPGRADE/DOWNGRADE/LEVEL TRANSPORT

VACUUM STATION

The vacuum station is the heart of the vacuum sewer system. It is similar to a conventional sewage pumping station. These stations are typically two (2) story concrete and block buildings approximately 25' x 30' in floor plan. Equipment in the station includes a collection tank, a vacuum reservoir tank, vacuum pumps, sewage pumps, and pump controls. (Figure 8). In addition, an emergency generator is standard equipment, whether it be located within the station, outside the station in an enclosure, or of the portable, truck mounted variety.

The collection tank, made of either steel or fiberglass, is the equivalent to a wet well in a conventional pumping station. The vacuum reservoir tank is connected directly to the collection tank and serves as a buffer to reduce the frequency of vacuum pump starts and thereby extend their life. The vacuum pumps can be either liquid ring or sliding vane type pumps. These pumps are usually sized for 5 to 8 hours per day run time. The sewage discharge pumps are non clog pumps with sufficient net positive suction head to overcome tank vacuum. Level control probes are installed in the collection tank to regulate the sewage pumps. Vacuum switches on the reservoir tank regulate the vacuum pumps. A fault monitoring system alerts the system operator should a low vacuum or high sewage level condition occur.

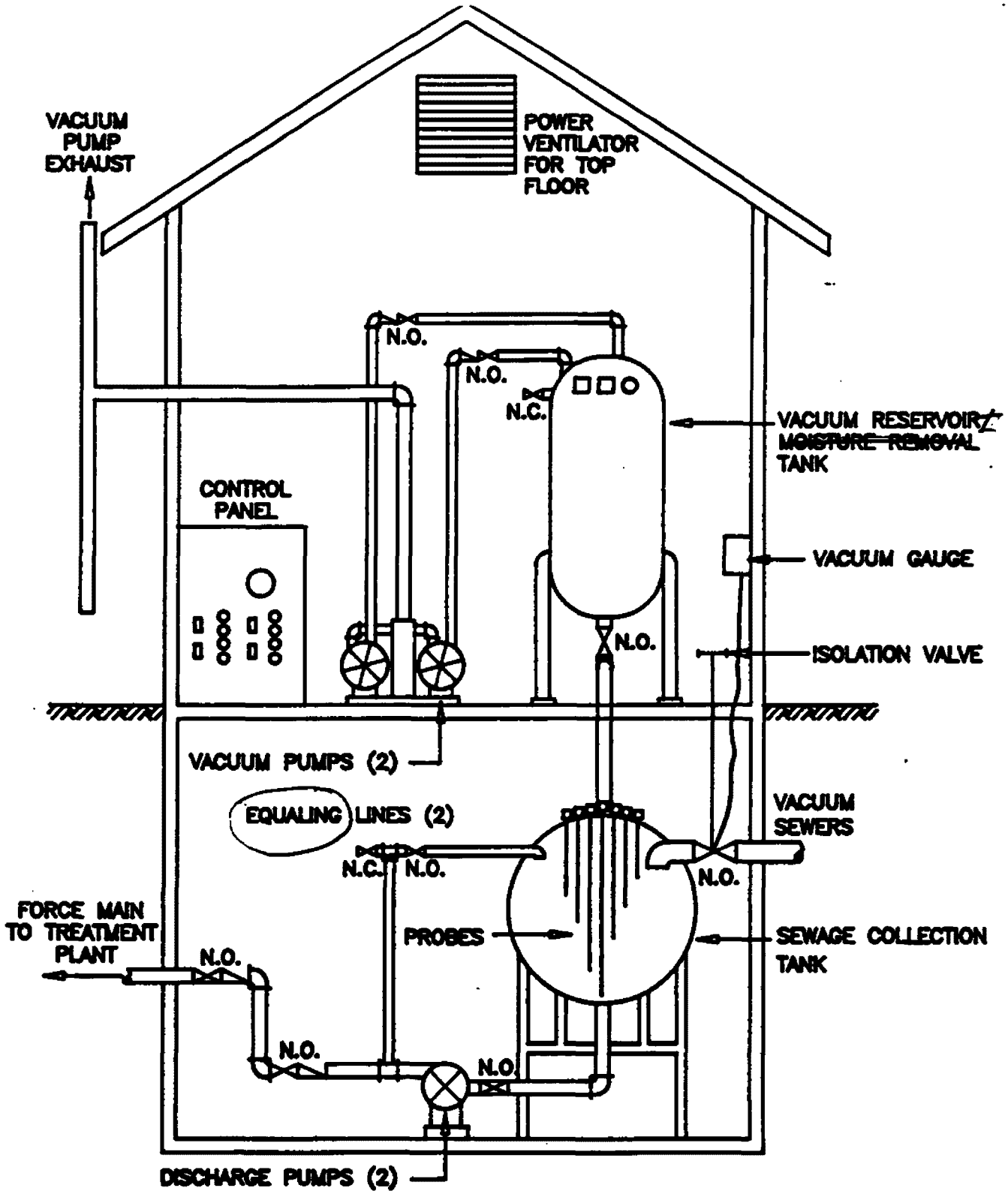

FIGURE 8
DIAGRAM OF A
TYPICAL VACUUM STATION

c. Operation

Vacuum or negative pressure sewer systems use vacuum pumps at central collection stations to evacuate air from the lines, thus creating a pressure differential. In negative pressure systems, a pneumatically operated valve serves as the interface between the gravity system from the individual user and the vacuum pipelines. Pressure sensors in a wastewater holding tank open and close the interface valve to control the flow of wastewater and air into the vacuum system.

The normal sequence of operation is as follows:

* Wastewater from the individual service flows by gravity to a holding tank.

* As the level in the holding tank continues to rise, air is compressed in a small diameter sensor tube. This air pressure is transmitted through a tube to the controller/sensor unit mounted on top of the valve. The air pressure operates the unit and its integral 3-way valve which applies vacuum from the sewer main to the valve operator. This opens the interface valve and activates a field adjustable timer in the controller/sensor. After a set time period has expired, the interface valve closes.

* The wastewater within the vacuum sewer approximates the form of a spiral rotating hollow cylinder traveling at 15 to 18 ft/sec. Eventually, the cylinder disintegrates from pipe friction, and the liquid flows to low points (bottom of lifts) in the pipeline.

* The next liquid cylinder and the air behind it will carry the liquid from the previous disintegrated cylinders up over the saw tooth lifts designed into the system. In this manner, the wastewater is transported over a series of lifts to the vacuum station.

The principles of operation of a vacuum sewer system have not been completely understood. An early concept was that of liquid plug flow. In this concept, it was assumed that a wastewater plug completely sealed the pipe bore during static conditions. The movement of the plug through the pipe bore was attributed to the pressure differential behind and in front of the plug. Pipe friction would cause the plug to disintegrate, thus breaking the vacuum. With this being the situation, reformer pockets were located in the vacuum sewer to allow the plug to reform and thus restore the pressure differential (Figure 9). In this concept, the re-establishment of the the pressure differential for each disintegrated plug was a major design consideration.

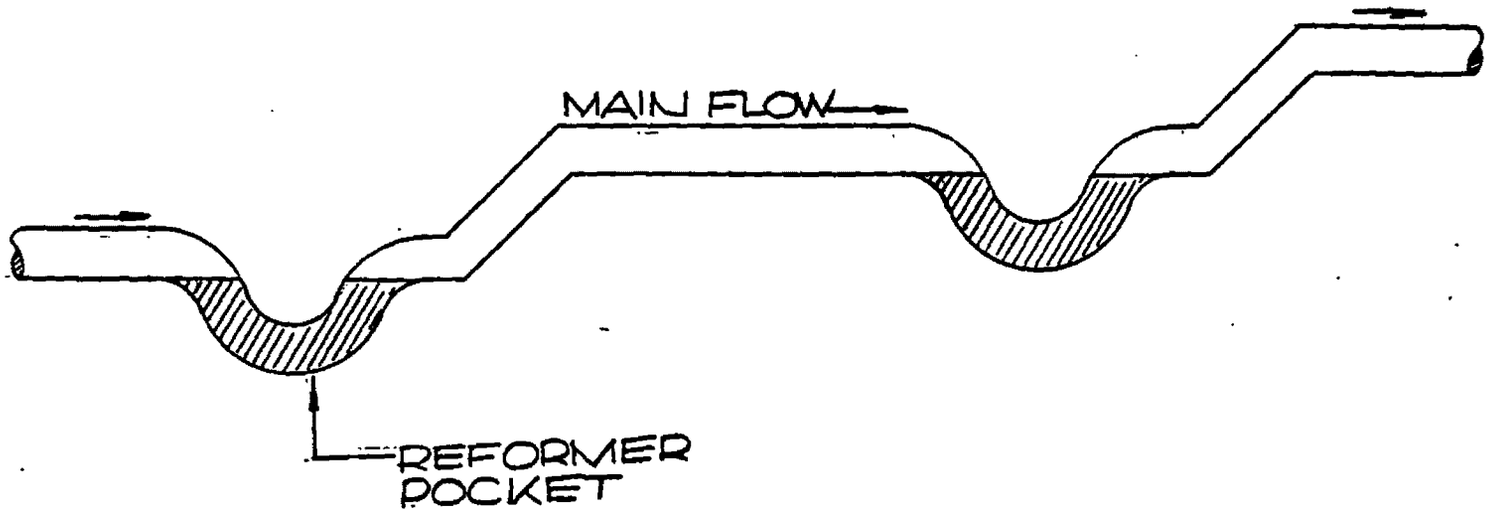

FIGURE 9
EARLY DESIGN CONCEPT
REFORMER POCKETS

In the current design concept, the reformer pockets are eliminated so that the wastewater does not completely fill or "seal" the pipe bore. Air flows above the liquid, thus maintaining a high vacuum condition throughout the length of the pipeline (Figure 10). In this concept, the liquid is assumed to take the form of a spiral, rotating, hollow cylinder. The momentum of the wastewater and the air carries the previously disintegrated cylinders over the downstream sawtooth lifts. The momentum of each subsequent air/liquid slug and its contribution to the progressive movement of the liquid component of the previous slugs is the major design consideration.

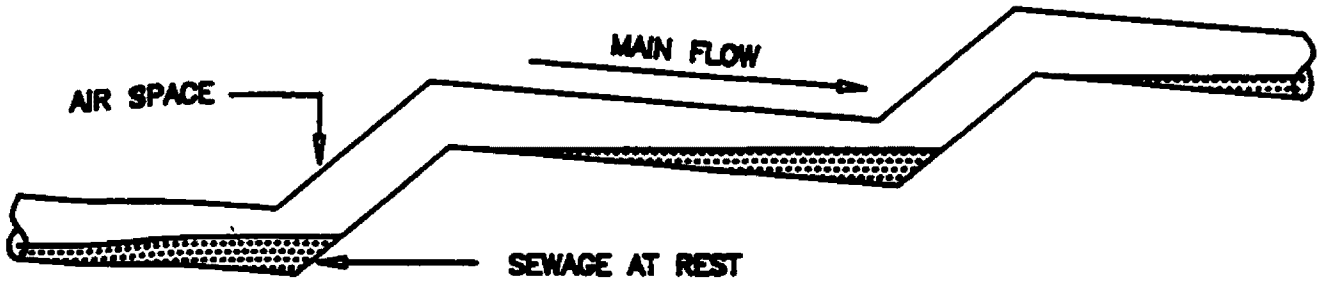

FIGURE 10
CURRENT DESIGN CONCEPT
PIPE BORE NOT SEALED

Both of the above design concepts are approximations and oversimplifications of a complex, two-phase flow system. The character of the flow within the vacuum sewer varies considerably. The plug flow concept is probably a reasonable approximation of the flow as it enters the system, whereas the progressive movement concept is probably a better approximation of the flow throughout the vacuum main.

The significance of the air as a driving force cannot be overemphasized. The atmospheric air expands within the vacuum sewer, thus driving the liquid forward. The air affects not only the liquid in the associated air/liquid slug, but also the liquid downstream.

3. Potential Applications

Table 4 shows general conditions that are conducive to the selection of vacuum sewers.

TABLE 4
CONDITIONS CONDUCIVE TO
VACUUM SEWER SELECTION

Unstable soils
Flat terrain
Rolling terrain with small elevation changes
High water table
Rock Unusual or restricted construction area
Deep basements
Low population density

Experience has shown that for vacuum systems to be cost-effective, a minimum of 75 to 100 customers is needed per vacuum station. The average number of customers per station in systems presently in operation is about 200 to 300. There are a few systems with fewer than 50 and some with as many as 2000 customers per station. Of course, there are communities which have multiple vacuum stations, each serving hundreds of customers.

Hydraulically speaking, vacuum systems are limited somewhat by topography. The vacuum produced by a vacuum station is capable of lifting sewage 15 to 20 feet, depending on the operating level of the system. This amount of lift many times is sufficient to allow the designer to avoid the lift station(s) that would be required in a conventional gravity system.

4. Extent of Use in the United States

Table 5 shows the operating residential vacuum sewer systems in the United States, as of December 1989. There are another dozen or so presently in the construction phase, with more being planned and designed.

TABLE 5
OPERATING VACUUM SYSTEMS IN THE U.S.

PROJECT NAME	PROJECT LOCATION	SYSTEM TYPE
Martingham	St. Michaels, Md.	AIRVAC
Foxcliffe Estates	Martinsville, Ind.	AIRVAC
Country Squire Lakes	North Vernon, Ind.	AIRVAC
Mathews Courthouse	Mathews, Va.	AIRVAC
Plainville	Plainville, Ind.	AIRVAC
Eastpoint	Eastpoint, Fla.	AIRVAC
Westmoreland	Westmoreland, Tenn.	AIRVAC
Fallen Leaf Lake	South Lake Tahoe, CA	AIRVAC
Upper Fairmont	Somerset Co., MD	AIRVAC
Queen Anne's County	Queen Anne's County, MD	AIRVAC
LaFargeville	LaFargeville, N.Y.	AIRVAC
Charlotte	Charlotte, Tenn.	AIRVAC
Ohio County-Phase I	Wheeling, WVa	AIRVAC
Ohio County-Phase IIA	Wheeling, WVa	AIRVAC
Ohio County-Phase IIB	Wheeling, WVa	AIRVAC
Friendly PSD	Friendly, WVa	AIRVAC
Central Boaz PSD	Parkersburg, WVa	AIRVAC
Red Jacket PSD	Red Jacket, WVa	AIRVAC
Washington Lands PSD	Washington Lands, WVa	AIRVAC
Cedar Cove	Lexington Park, Md.	AIRVAC
Lake Chautauqua	Celeron, N.Y.	AIRVAC
Lag Marina	Norfolk, Va.	AIRVAC
Emmonak	Emmonak, Alaska	AIRVAC
Swan Point	Swan Point, Md.	AIRVAC
Alton	Alton, Ky	AIRVAC
White House	White House, Tenn.	AIRVAC
Morristown	Morristown, N.Y.	AIRVAC
Lake Manitou	Rochester, Ind.	AIRVAC
Theresa	Theresa, N.Y.	AIRVAC
Sanford	Sanford, Fla	AIRVAC
South Seas Plantations	Fort Meyers, Fla.	ENVIROVAC
Noorvik	Noorvik, Alaska	ENVIROVAC
Big Bear Lake	Big Bear Lake, CA	ENVIROVAC
Centertown	Centertown, KY	ENVIROVAC
Stafford Township	Manahawkin, N.J.	ENVIROVAC
Ocean Pines	Berlin, Md.	VAC-U-TEC
Lake of the Woods	Locust Grove, Va.	VAC-U-TEC
Shipyard Plantations	Hilton Head Island, SC	VAC-U-TEC
Palmetto Dunes	Hilton Head Island, SC	VAC-U-TEC
Captain's Cove	Greenback, Va	VAC-U-TEC

In addition to the above residential systems, several industrial facilities use vacuum systems to collect wastewater. These companies include the Scott Paper Company pulp and paper mill in Mobile, Alabama with 25 AIRVAC valves, Stauffer Chemical Company in Baton Rouge, Lousiana with 7 AIRVAC valves, and Keystone Steel and Wire Company in Peoria, Illinois with 29 AIRVAC valves. ENVIROVAC type systems using vacuum toilets are used in remote construction camps and park restroom facilities, and along with another vacuum system manufacturer, Jerad Industies, in many shipboard installations. These types of installatinns are beyond the scope of this report, and will not be addressed.

5. Myths vs. Reality

Many myths exist concerning vacuum sewer systems. In many ways a vacuum system is not unlike a conventional gravity system. Wastewater flows from the individual homes and utilizes gravity to reach the point of connection to the public sewer. The line materials are the same. The equipment used in the vacuum station are the same as those used in a conventional lift station. In all of these ways, the vacuum system does not differ from the conventional gravity system.

The most common myths concerning vacuum sewer technology are discussed below.

MYTH: Vacuum sewers are only to be considered where flat terrain exists.

REALITY: Vacuum sewers should be considered in level, downhill, and uphill terrain. The practical limit of uphill transport historically has been 15-20 vertical feet, although AIRVAC currently has an experimental operating system at their Indiana plant that has 45 vertical feet of lift. Hydraulic information at key points is being monitored and recorded by computers. This effort may result in the practical limits of lift being increased.

MYTH: Vacuum sewers should not be considered when natural gravity exists.

REALITY: Many times a broad view of an area's terrain automatically rules out vacuum sewers as an alternative to be considered. However, a closer look may reveal many small advantages, that, when considered collectively, add up to a significant savings.

A fine example of this occurred in the Ohio County PSD-Phase IIA project, in Wheeling, WV. In that project, it only seemed logical to the designer to use gravity sewers. The area was rural with residential development following a creek. However, upon closer inspection, it was evident that the gravity main would be required to cross the creek in various places, since the development was on both sides. With the creek bank being 10 feet deep and the creek crossing requiring 3 feet of cover, the gravity sewer would have been 13 feet deep for most of its length (Figure 11).

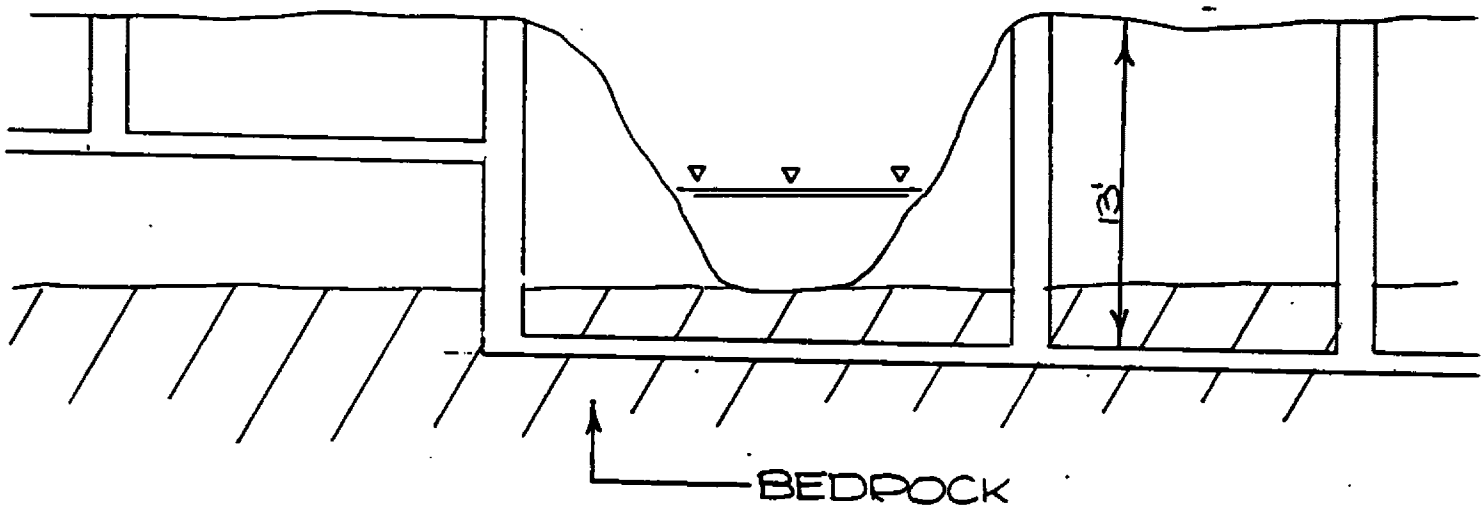

FIGURE 11
GRAVITY SEWER SYSTEM EXAMPLE

Since the line crossed under the creek bed, which was solid rock, the entire length of the excavation would have been in rock. At the terminus of the system, a lift station was needed to pump the sewage to a plant, which was located above the 100 yr flood elevation (Figure 11).

By utilizing vacuum, the designer used "lifts" to raise the main above the bedrock level to a depth of 4 or 5 feet (Figure 12). The vacuum station that was required was nothing more than the lift station that was required in the gravity layout, with the exception of the addition of vacuum pumps. This additional expense was more than offset by the savings of the line installation. The "inexpensive" gravity system would have required deep, difficult excavations with much rock. The vacuum alternative had much shallower excavations with little rock. In essence, the vacuum system was installed as a "vacuum assisted-gravity sewer" with significant cost savings.

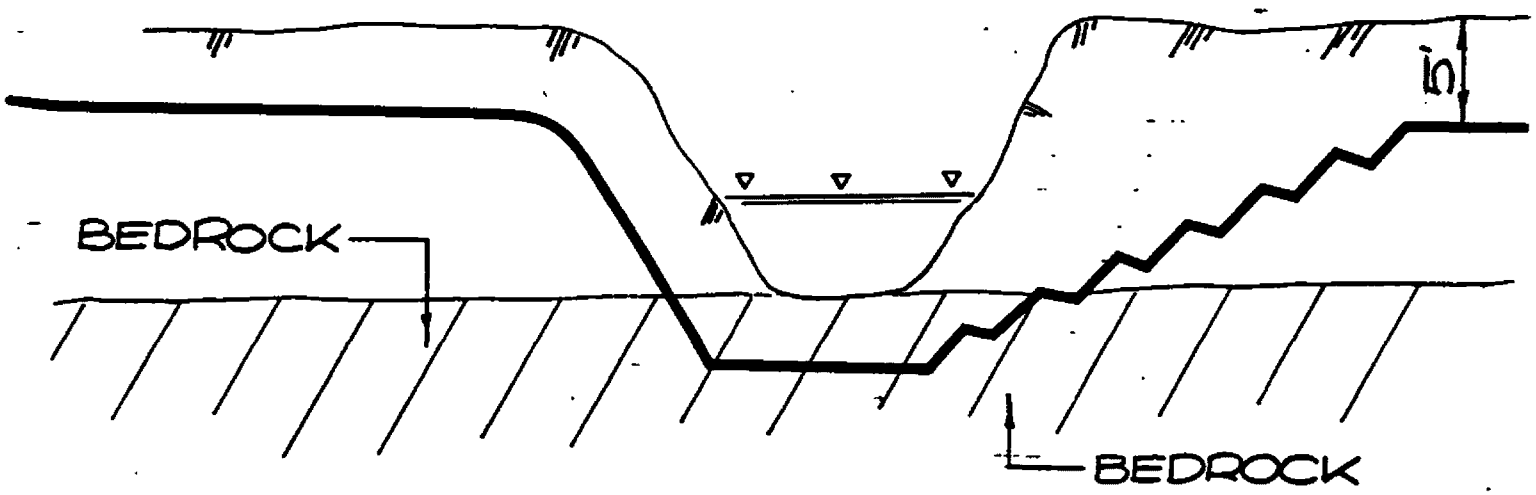

FIGURE 12
VACUUM-ASSISTED
GRAVITY SEWER SYSTEM
EXAMPLE

MYTH: Since vacuum sewers are mechanized, they undoubtedly are unreliable.

REALITY: Early vacuum systems were not without their problems. However, component improvements, design advancements, and experience with the technology have resulted in systems that are very reliable.

MYTH: Vacuum sewers are operation and maintenance intensive.

REALITY: In general, vacuum sewers may be less costly to construct than conventional sewers, but most likely are more expensive to operate and maintain. However, the magnitude of the O&M effort has been greatly overstated. This is due largely to the little historical data that exists coupled with the conservative nature of most engineers.

MYTH: Replacement parts are expensive.

REALITY: The components of the vacuum station are not unlike those of a convention pumping station. The small parts of the vacuum valve that are subjected to wear are very inexpensive. A vacuum valve can be rebuilt for about $50.

MYTH: The vacuum pumps must run 24 hours a day to keep vacuum on the system.

REALITY: The typical vacuum station is designed so that the vacuum pumps operate about 5 hours a day.

MYTH: It takes a tremendous amount of energy to keep constant vacuum on the system.

REALITY: The average sized vacuum station contains 20 hp vacuum pumps. Considering an average run time of 5 hours a day and the cost of electricity at $.08/kwhr, the monthly cost of power for the vacuum pumps is about $185. A system this size can and typically does serve 200 to 300 customers.

MYTH: The operation of a vacuum system requires a person with a college degree.

REALITY: Any person that is mechanically inclined can operate a vacuum system. The vast majority of the systems in operation in the U.S. have operators with no more than a high school education.

MYTH: If the vacuum valve fails, sewage will back up into my house.

REALITY: Vacuum valves can fail in either the open or closed position. The failing in the closed position will result in backups. This would be analogous to a blockage or surcharging of a gravity sewer. Fortunately, failure in this mode is extremely rare. Almost all valve failures happen in the open position. This means that the vacuum continues to work to evacuate the contents of the pit. The vacuum pumps simply run longer to keep up as this failure simulates a line break. In this case the telephone dialer notifies the operator of this condition, which is generally corrected in less than an hour.

MYTH: The vacuum main has to be deep enough to drain the basement.

REALITY: In a gravity sewer layout, one deep basement may dictate the depth of the entire system. With vacuum sewers, the depth of the vacuum main generally is independent of the depth of the basement (assuming the overall 15-20 foot hydraulic limit has not been exceeded). Only the valve pit must be of sufficient depth to receive the flow from the basement (Figure 13).

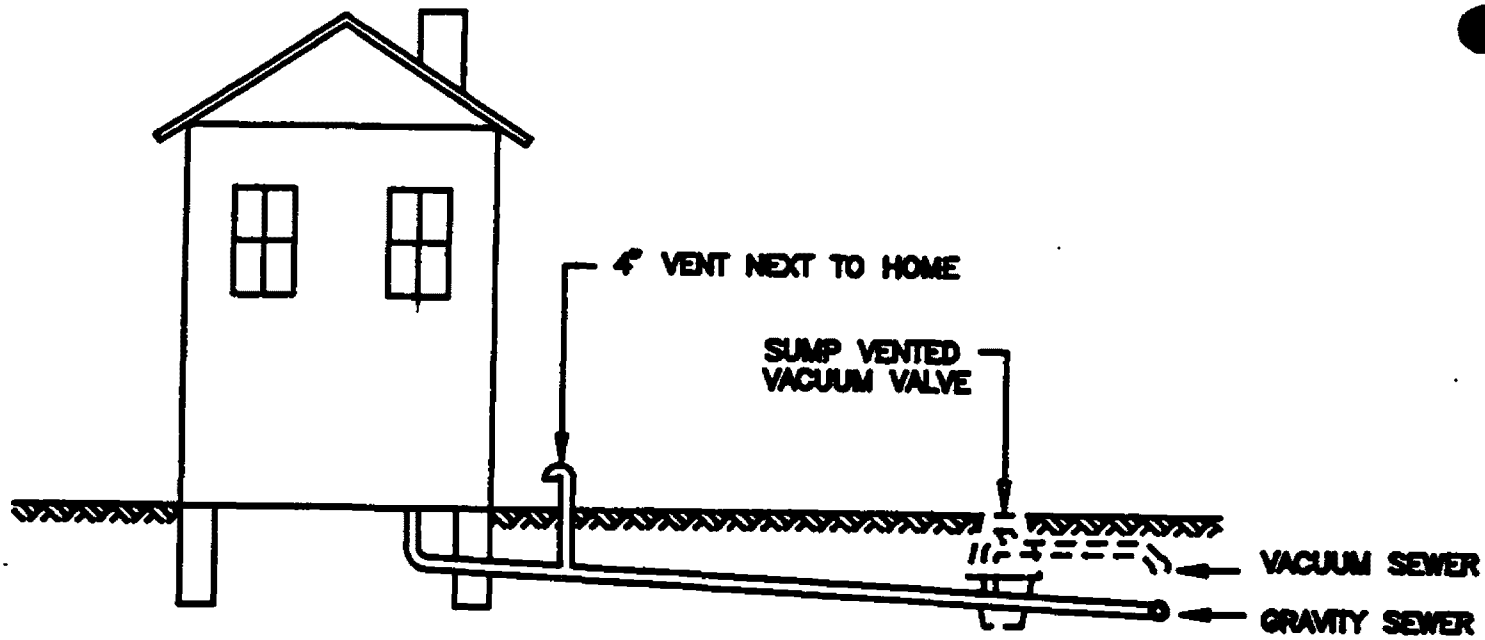

FIGURE 13
BASEMENT/VALVE PIT/MAIN RELATIONSHIP

In short, many of the major objections to the use of vacuum systems are not well founded. These systems have been acceptable in a variety of applications and locations. Any hypothetical or abstract difficulty that can be appled to the vaccum system can also be applied to the more conventional systems. In any event, the vacuum system offers the same convenience as any other type of public sewer system with reference to the actual discharge from the home and meeting the needs of the particular locality.

III. VACUUM SEWER SYSTEMS

A. INTRODUCTION

SECTION A

INTRODUCTION

The use and acceptence of alternative wastewater collection systems has expanded greatly in the last 20 years. One of these alternatives, vacuum sewers, has been used in Europe for over a 100 years. However, it has been only in the last 25 years or so that vacuum transport has been utilized in the United States. In this short period of time, significant improvements have been made in system components. In addition, experience with operating systems has led to advancements in design, construction, and operational techniques. These factors have all contributed to vacuum sewer systems being a reliable, cost-effective altenative for wastewater conveyance.

Vacuum sewerage is a mechanized system of wastewater transport. Unlike gravity flow, it uses differential air pressure to move the sewage. It requires a central source of power to run vacuum pumps which maintain vacuum on the collection system (Figure 1). The system requires a normally closed vacuum/gravity interface valve at each entry point to seal the lines so that vacuum is maintained. These valves, located in a pit, open when a predetermined amount of sewage accumulates in the collecting sump. The resulting differential pressure between atmosphere and vacuum becomes the driving force that propels the sewage towards the vacuum station.

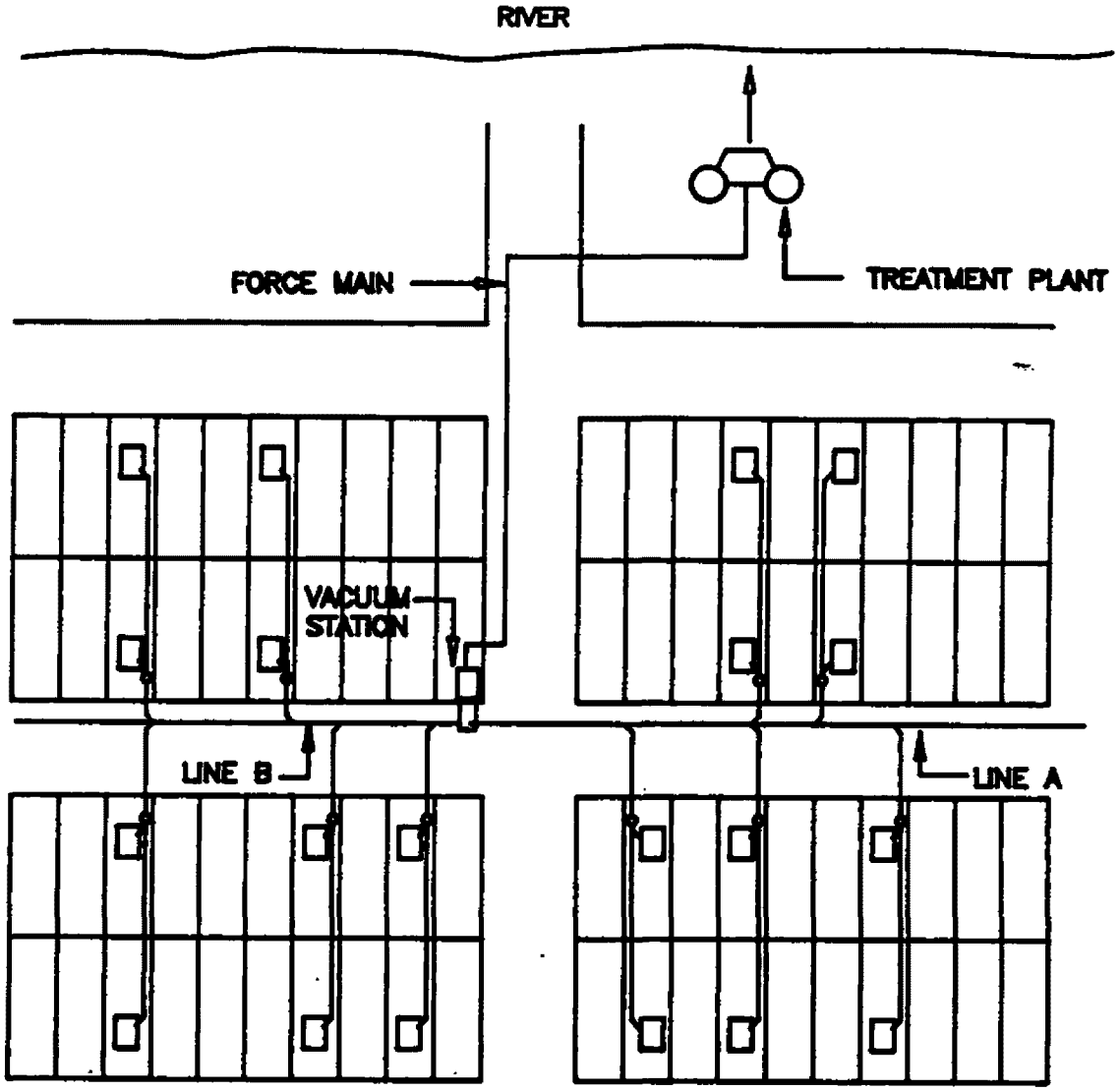

PLAN

REDO DWG TO ELIMINATE VAC LINES ON PRIVATE SERVICE

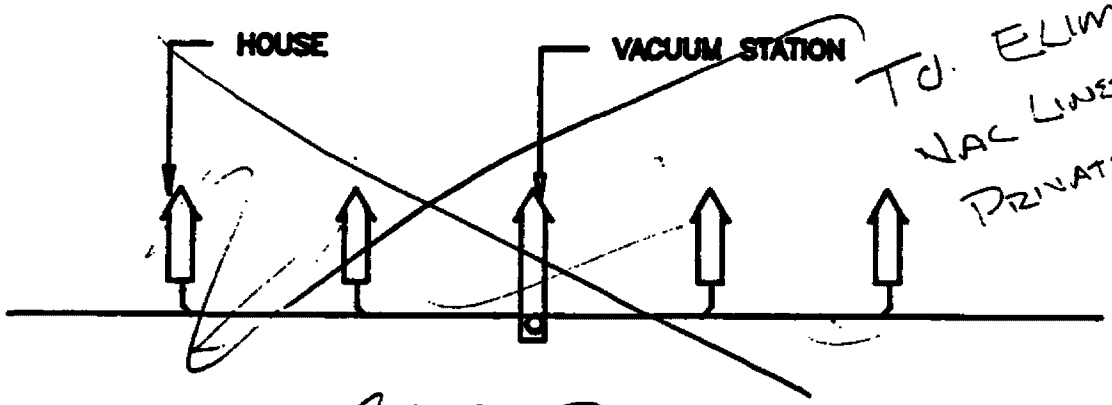

~~CROSS SECTION~~

FIGURE 1
TYPICAL LAYOUT
VACUUM SEWER SYSTEM

A vacuum system is very similar to a water system, only the flow is in reverse (Figure 2). This relationship would be complete if the vacuum valve was manually opened, like a water faucet is manually opened. With proper design, construction, and operation a vacuum system can be made to equal a water system in terms of reliability.

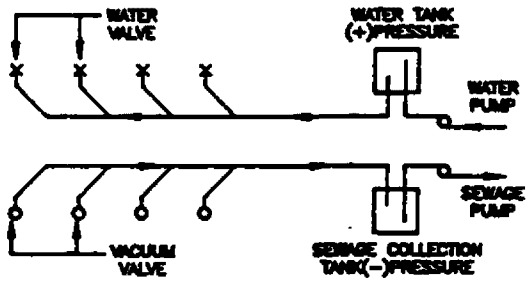

FIGURE 2
WATER SYSTEM/VACUUM SYSTEM SIMILARITIES

The choice of collection system type is usually made by the consulting engineer in the planning stages. This choice is the result of a cost-effectiveness analysis. Where the terrain is applicable to a gravity system, the vacuum system many times is not even considered. While gravity may be the cost-effective in these situations, many small factors considered collectively may result in a vacuum system being the proper choice. Vacuum sewers should considered where one or more of the following conditions exist:

* Unstable soil
* Flat terrain
* Rolling land with many small elevation changes
* High water table
* Rock
* Deep basements
* Unusual or restricted construction conditions
* Low population density

The advantages of such systems may include substantial reductions in water use, materials, excavation costs, and treatment expenses. In short, there is a potential for overall cost-effectiveness. Specifically, the following advantages are evident:

* Small pipe sizes, usually 3", 4", 6" and 8" are used.

* No manholes are necessary

* Field changes can easily be made as unforeseen underground obstacles can be avoided by going over, under, or around them.

* Installation at shallow depths eliminates the need for wide, deep trenches reducing excavation costs and environmental impact.

* High scouring velocities are attained, reducing the risk of blockages.

* Unique design features of system eliminates exposing maintenance personnel to the risk of H_2S gases.

* Very nature of the system will not allow major leaks to go unnoticed resulting in a very environmentally sound situation.

* The interface valve isolates each home from the main, making it impossible for system flow to backup into a house.

* Only one source of power, at the vacuum station, is required.

* The elimination of infiltration results in a reduction of size and cost of the treatment plant.

* The air/sewage mixture enters the sewers at high velocity with the air providing a high degree of mixing action of the sewage inside the vacuum sewers.

* The short detention times in the receiving vessels, along with the introduction of air, do not allow for sewage to become septic thereby resulting in the lack of odors.

In Chapter I.C.1, the history of vacuum sewer technology is discussed. The differences in overall system philosophy, design concepts, system components, and marketing approaches of four manufacturers are discussed. Each of these companies have made significant contributions to the vacuum sewer industry. Presently, most systems in operation in the United States are AIRVAC systems. For this reason, the remainder of Chapter III will focus on the AIRVAC approach.

III. VACUUM SEWER SYSTEMS

B. SYSTEM PLAN AND ELEVATION VIEWS

SECTION B

SYSTEM PLAN AND ELEVATION VIEWS

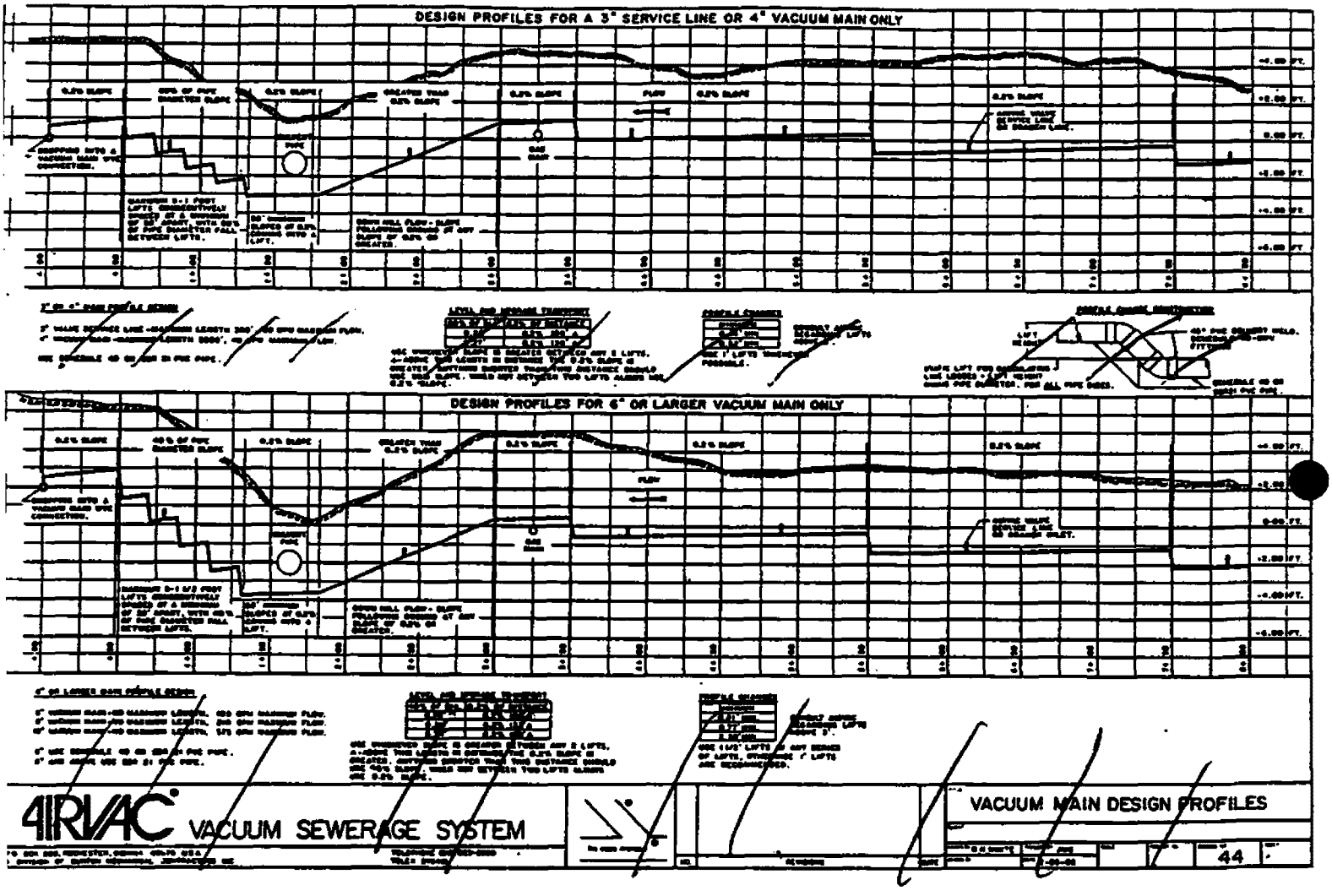

REPRINTED COURTESY OF AIRVAC

FIGURE 16
PLAN AND PROFILE VIEW
TYPICAL VACUUM LINE

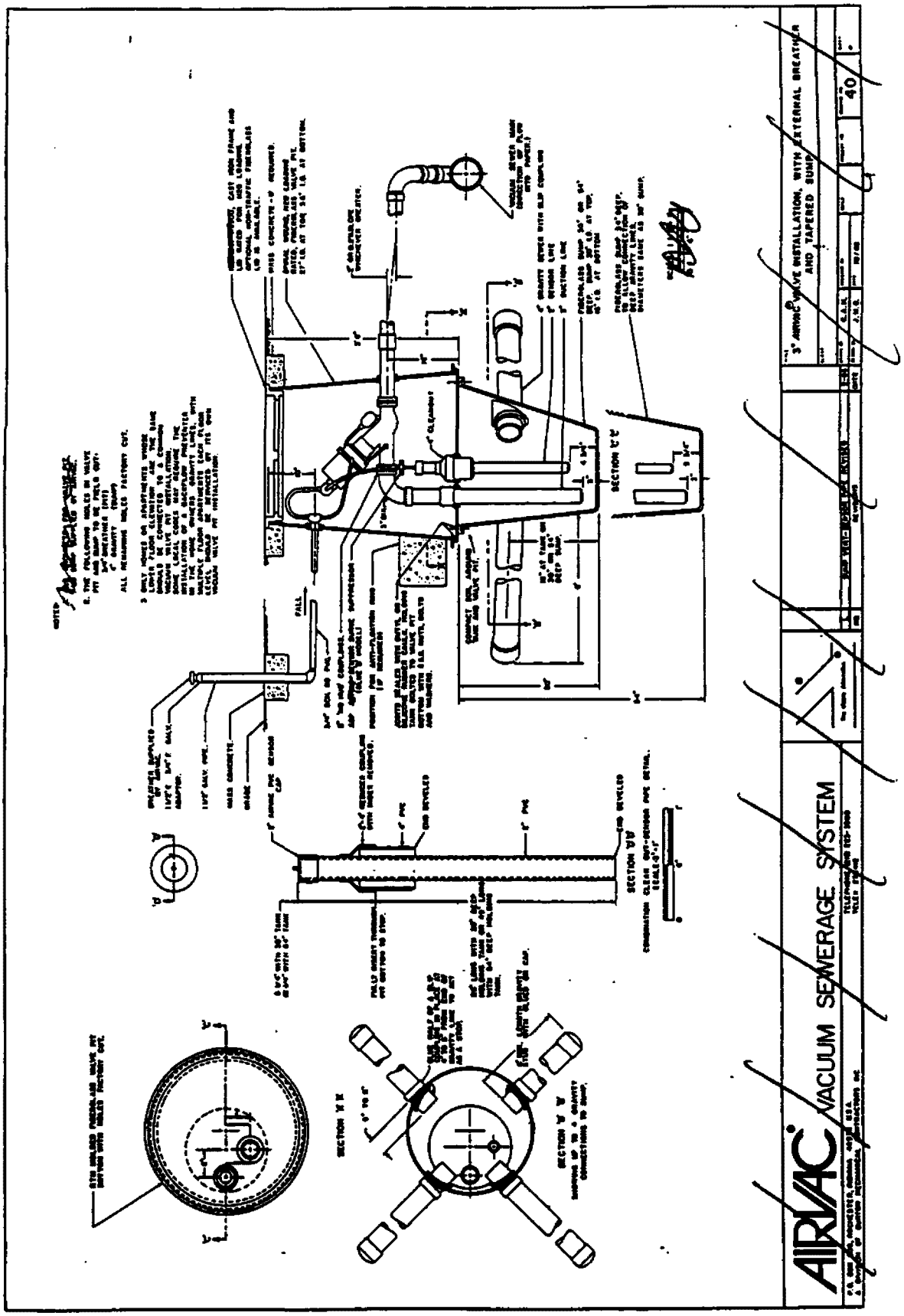

REPRINTED COURTESY OF AIRVAC

FIGURE 17
PLAN AND PROFILE VIEW
TYPICAL VALVE PIT

III. VACUUM SEWER SYSTEMS

C. DESCRIPTION OF ALL SYSTEM COMPONENTS

SECTION C

DESCRIPTION OF SYSTEM COMPONENTS

1. Services

The services in a vacuum system consist of the following components:

* Vacuum valve
* Valve pit/sump
* Buffer tanks
* Auxiliary vent

The vacuum valve provides the interface between the vacuum in the collection piping and the atmospheric air in the building sewer. System vacuum in the collection piping is maintained when the valve is closed. With the valve opened, system vacuum evacuates the contents of the sump. The valve is entirely pnuematic by design, and has a 3-inch opening size. Some states have made this a minumum size requirement, as this matches the throat diameter of the standard toilet.

Valve pits with sumps are needed to accept the wastes from the house. These consists of two (2) separate chambers. The upper chamber houses the vacuum valve. The bottom chamber is the sewage sump into which the building sewer is connected. These two chambers are sealed from each other. The combination valve pit/sump is made of fiberglass, and is able to withstand traffic loads. These

are available in two (2) different depth sizes. Should a deeper setting be needed, the fiberglass pit/sump arrangement may be replaced by a concrete manhole section in which the vacuum valve is mounted. In this arrangement, only one chamber exists.

Buffer tanks are used for large customers or when a pressure/vacuum or gravity/vacuum interface is desired, as would be the case with a hybrid system. These tanks consist of manhole sections that are custom built to include sumps, multiple valves, and other miscellaneous equipment.

A 4 inch auxiliary vent is installed on the homeowner's service lateral, downstream of all of the house traps (Figure 5). This vent is necessary to provide the volume of air that will follow the sewage into the main. Some operating entities require the vent to be located near a permanent structure for aesthetic and protection reasons. In climates where temperatures fall below freezing, this vent must be located a minimum of 20 feet from the valve pit. In this manner, the heat from the sewage acts to warm the freezing atmospheric air thus reducing the possibility of freezing of some of the valve components.

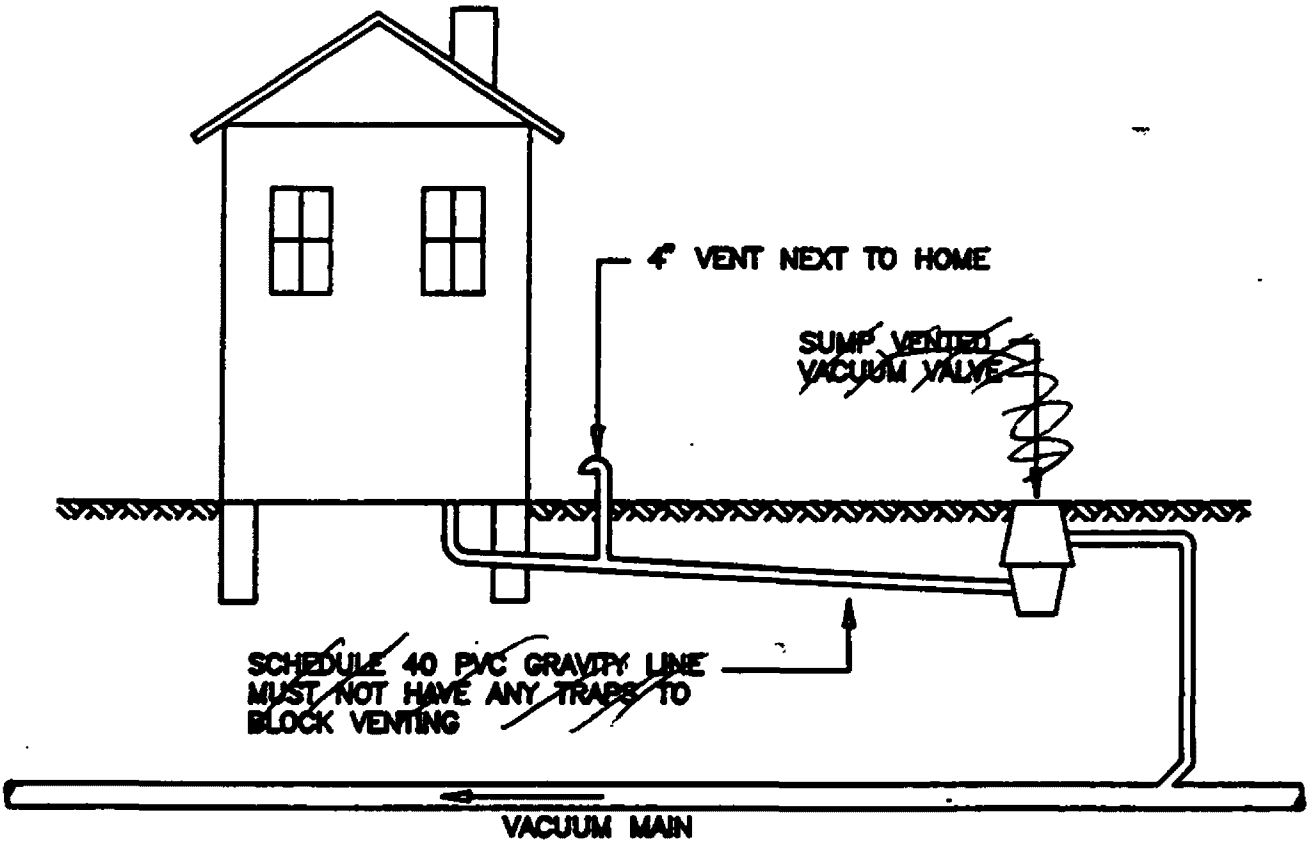

FIGURE 5
AUXILIARY VENT LOCATION

2. Collection Piping

The collection piping network consists of the following components:

* Pipe
* Fitting
* Lifts
* Division valves

The piping network is connected to the individual valve pits and the collection tank. Schedule 40, SDR 21 or SDR 26 PVC pipe is used, with SDR 26 being the most common. Both solvent-welded and gasketed joints are acceptable. Experience has shown there to be less problems with the gasketed type pipe. Where gasketed pipe is used, the gaskets must be certified for use under vacuum conditions. In special cases, DCIP gasketed pipe may be used, providing the pipe is vacuum tested. Typical sizes include 3-inch, 4-inch, 6-inch and 8-inch.

PVC pressure fittings are needed for directional changes as well as for the crossover connections from the service line to the main line. These fittings may be solvent-welded or gasketed. Again, the recent trend is to avoid solvent-welded fittings where possible.

Lifts, or vertical profile changes, are used for uphill liquid transport. These lifts are generally made in a sawtooth fashion. A single lift consists of two (2) 45-degree fittings connected with a short length of pipe (Figure 6).

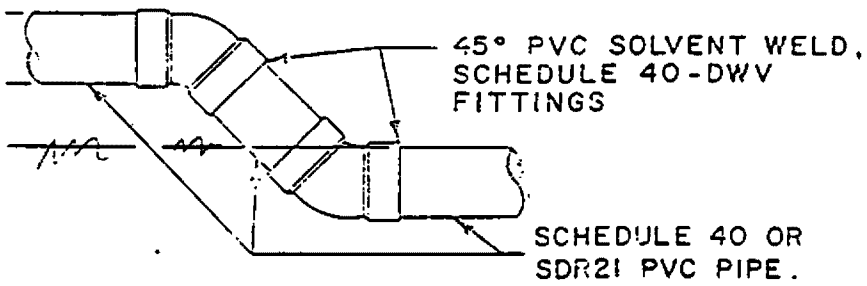

FIGURE 6
LIFT DETAIL

Since vacuum sewers are exposed to repeated energy inputs, pipe movement is possible if proper installation practices are not followed. Early systems used concrete thrust blocks at each fitting. More recent systems have been installed without concrete thrust blocking. The theory behind this is that the pressure is inward rather than outward as would be the case in a positive pressure situation. However, a more important concern is that each fitting is a point of possible joint failure. Failure of the fitting may occur because of trench settlement rather than "thrust". For this reason, care must be exercised in the backfill and compaction operations. Granular backfill material covering the fitting coupled with mechanical compaction is a must if thrust blocking is to be eliminated. If thrust blocking is used, a thin plastic membrane should cover the pipe prior to the concrete pour.

Division valves are used for isolation purposes during troubleshooting. Both plug and resilient wedge gate valves have been used. Recent systems have included gauge taps installed just downstream of the division valve. This gauge tap makes it possible for one man to troubleshoot without having to check vacuum at the station. This greatly reduces emergency maintenance expenses, both from a time and manpower standpoint.

Different pipe location identification methods have been used. These include magnetic trace tape in the top of the trench, metal toning wires above the pipe, and color coding the pipe itself.

3. Vacuum Station

Vacuum stations function as a transfer facility between a central collection point for all vacuum sewer lines and a pressurized line leading directly or indirectly to a treatment facility. The following components are included in the vacuum station (Figure 7):

* Vacuum pumps
* Sewage pumps
* Generator
* Collection tank
* Reservoir tank
* Pump controls
* Motor control center
* Gages/chart recorder
* Fault monitoring system

Vacuum pumps are needed to produce the vacuum necessary for liquid transport. The operational history of vacuum sewers indicates that the optimum operating range is 16-20 in. Hg. The pumps, however, should have the capability of providing up to 25-in. Hg as this level is sometimes neeeded in the troubleshooting process. Duplicity is a minimum requirement with each pump capable of providing 100 percent of the required air flow (cfm).

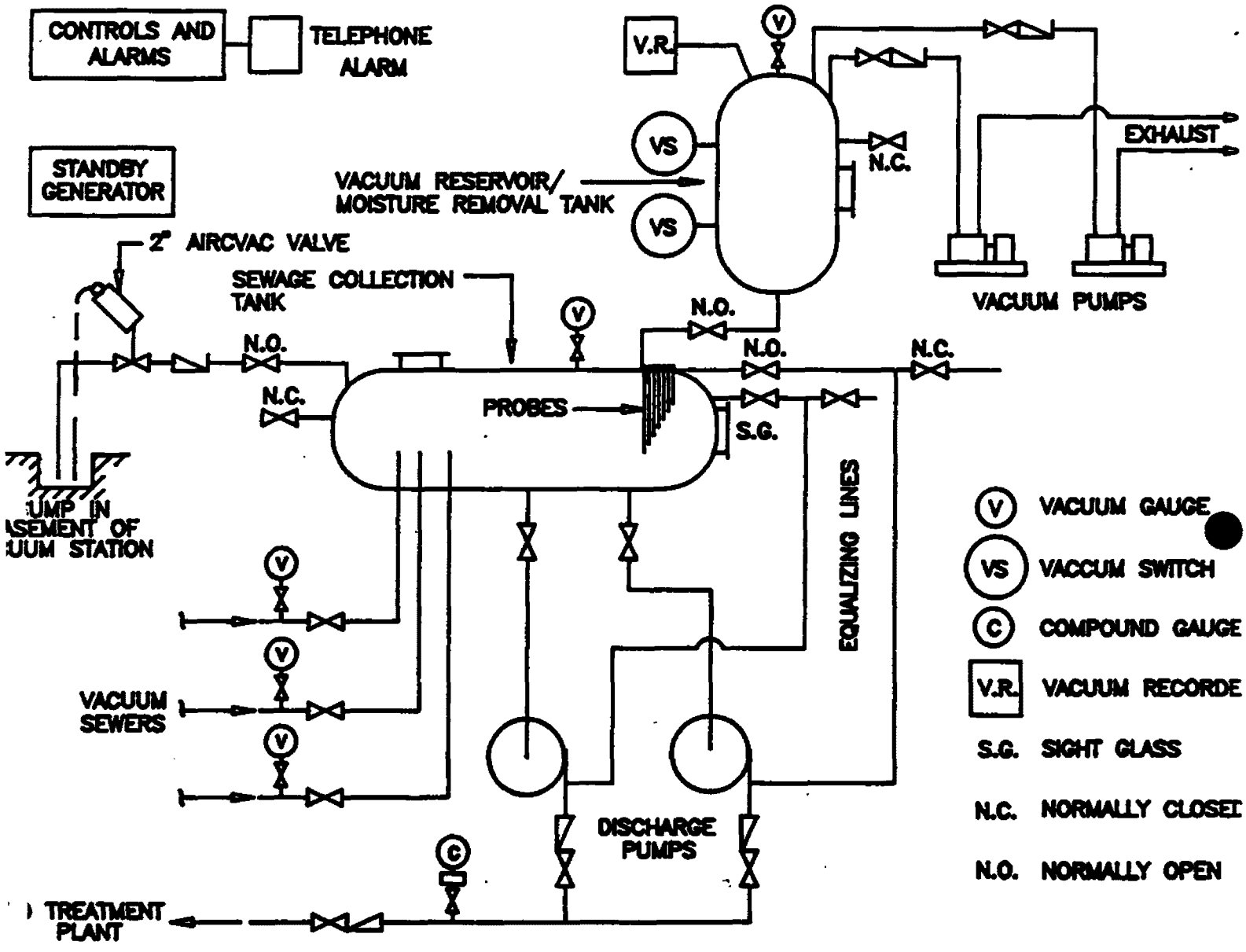

FIGURE 7
LINE DIAGRAM
OF A
TYPICAL VACUUM STATION

Vacuum pumps may be either the liquid ring or sliding vane type and must be capable of delivering the specified cfm at 20 in. Hg. A liquid ring vacuum pump utilizes a service liquid as a sealing medium between an offset impeller and the pump casing. As the impeller spins, the service liquid is forced against the pump outer casing by centrifugal force, and air is compressed and forced out of the discharge pipe by the eccentric liquid action. The vacuum is created as more air is drawn in to be compressed. When liquid ring pumps are used, oil is recommended as the seal liquid. Since the service liquid continually circulates when the pump is in operaration, a service liquid tank must be provided. The tank should be corrosion resistent and air tight. The tanks are vented with an outlet to the outside. Since the service liquid carries a significant quantity of heat away from the pump, a heat exchanger is required. A liquid ring pump is shown in cross-section in Figure 8.

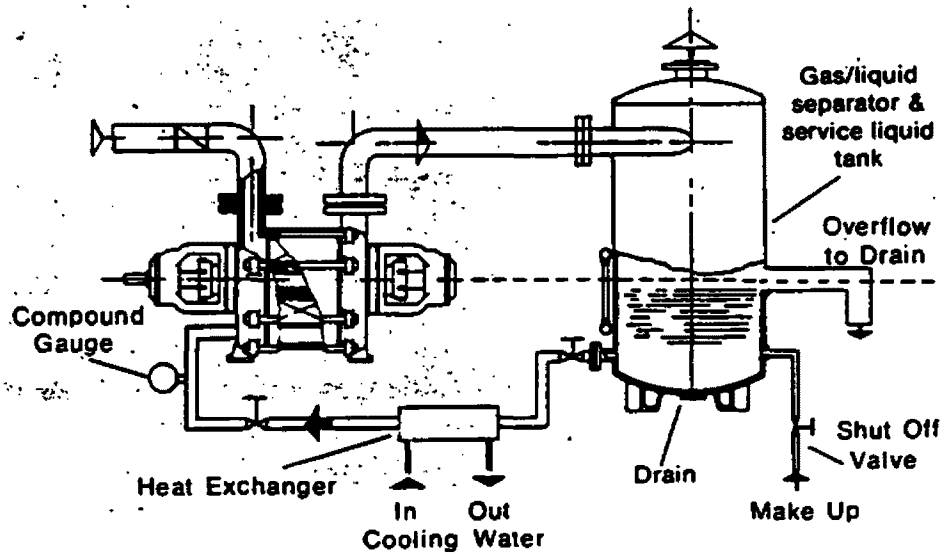

FIGURE 8
LIQUID RING PUMP
CROSS SECTION

Sliding-vane type vacuum pumps may also be used. For these types of pumps an air filter is required. This filter is located on the inlet line between the reservoir tank and the vacuum pump so as to remove particulate material which might cause excessive impeller wear if it were to enter the pump volute. The use of sliding vane vacuum pumps has increased recently. The reason for this is the lower power consumption required for a given pump

capacity. On the negative side, there have been problems reported with the vulnerabilty of these pumps should liquid be carried into them. In this situation, the pumps are usually damaged to the point where a replacement pump will be required. By contrast, the liquid ring pump, by its very nature, can usually withstand an accident of this type with very little damage. Design precautions, such as an electrically controlled plug valve between the collection tank and the reservoir tank, can be added to the piping system in order to protect the sliding-vane type pumps. A cross section of a sliding-vane type vacuum pump is shown in Figure 9.

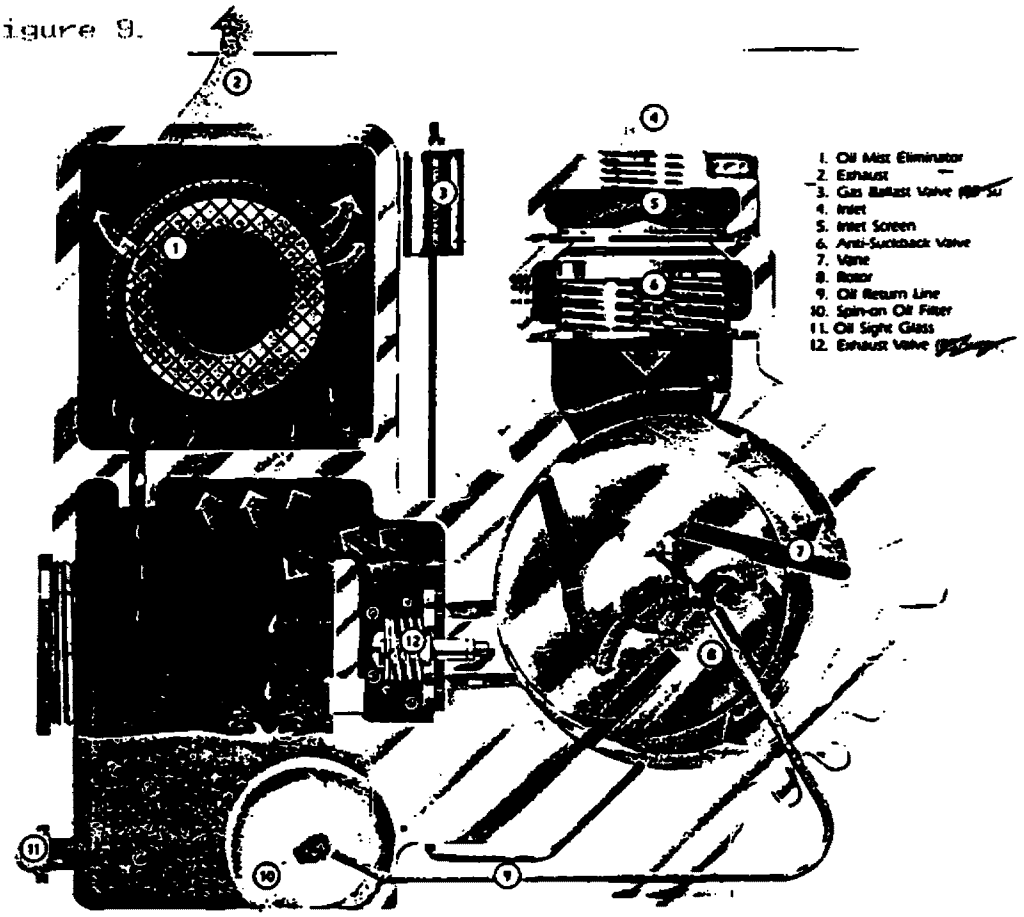

FIGURE 9
SLIDING VANE PUMP
CROSS SECTION

REPRINTED COURTESY OF BUSCH PUMPS

Sewage pumps are required to transfer the liquid that is pulled into the collection tank by the vacuum pumps to its ultimate point of disposal. Dry pit pumps have been used extensively although submersible sewage pumps located on guide rails within the collection tank may be used as an alternative. The most frequently used type of pump have been the non-clog type. Duplicity is required with each pump capable of providing 100 percent of the design capacity. The level controls are set for a minimum of 2 minutes pump running time to prevent excessive pump starting and related increased wear. The pumps should have shutoff valves on both the suction and discharge piping to allow for removal during maintenance without affecting the vacuum level.

Check valves are used on each pump discharge line or on a common manifold after the discharge lines are joined to it. Equalizing lines, consisting of small diameter clear PVC pipe connecting the pump discharge to the collection tank are usually required. The purpose of these equalizing lines are to remove air from the the pump and to equalize the vacuum acrossed the impeller. In addition, they will prevent the loss of prime should a check valve leak. Since this setup will result in a small part of the discharge flow being recirculated to the collection tank, a decreased net pump capacity results.

Cerrone & Associates, in their most recent designs, have eliminated equalizing lines by using horizontal sewage pumps with a continously flooded suction. This is accomplished through the use of a ball check valve on the pump suction piping between the collection tank and the sewage pumps. Prior to using this concept, the designer should carefully weigh whether the pumping cost savings are significant enough to risk the possibility of failure of the ball check and the resulting problems that would occur.

Sewage pumps are typically located at an elevation significantly below the collection tank to minimize net positive suction head (NPSH) requirements. In conjunction with NPSH requirements, pump heads are increased by 23 feet to account for tank vacuum. Both vertical and horizontal pumps can be used.

Materials of construction for pumps include cast iron with stainless steel shafts, while avoiding aluminum, bronze and brass. Fiber packing is not recommended. Double mechanical seals which are adaptable to vacuum service should be used.

A standby generator is a must. It ensures the continuing operation of the system in the event of a power outage. Standard generators that have been used in other wastewater applications are available from a variety of manufacturers.

The wastewater is stored in the collection tank until a sufficient volume accumulates, at which point the tank is evacuated. It is a sealed, vacuum tight vessel made of either fiberglass or steel. Fiberglass tanks are generally more expensive, but do not require the future maintenance (painting) of a steel tank. Vacuum, produced by the vacuum pumps, is transferred to the collection piping system through the top part of this tank. The part of the tank below the invert of the incoming lines acts as the wetwell. A bolted hatch provides access to the tank should it be necessary.

Most collection tanks are located at a low elevation relative to most of the components of the vacuum station. This minimizes the lift required for the sewage to enter the collection tank, since sewage must enter at or near the top of the tank to insure that vacuum can be restored upstream. Many times this results in a deep basement required in the vacuum station.

A vacuum reservoir tank is located between the vacuum pumps and the collection tank. It has three functions: (1) to reduce carryover of moisture into the vacuum pumps; (2) to act as an emergency reservoir; and (3) to reduce the frequency of vacuum pump starts. Like the collection tank, it can be made of either fiberglass or steel.

The vacuum pumps are controlled by vacuum switches located on the reservoir tank. Usual operating level is 16-20-in. Hg with a low level alarm of 14-in. Hg. The sewage pumps are controlled by a probe(s) located inside of the collection tank. One method includes using seven (7) probes, one for each of the six (6) set points of the pumping cycle and one (1) as a ground. Another method relies on a single probe that is capable of monitoring all of the set points. These probes are the capacitance-inductive type. They require a transmitter/transducer to send a 4-20 mA signal to the control panel.

The motor contol center houses all of the motor starters, overloads, control circuitry, and hours run meter for each vacuum and sewage pump. The vacuum chart recorder, colllection tank level control relays, and the telephone dialer are also normally located within the motor control center.

Vacuum gauges are used on all incoming lines as well as on both the collection tank and the reservoir tank. Their purpose is to allow the operator to monitor the system. These gauges are very important in the troubleshooting procedures. Chart recorders for both the vacuum pumps as well as the sewage pumps are needed so that system characteristics can be established and monitored. Like gauges, these recorders are vital in the troubleshooting process.

A fault monitoring system is needed to alert the operator of any irregularities, such as a low vacuum level. An automatic telephone dialer serves this purpose. There are a sufficient number of manufacturers that have this type of equipment.

For small systems with flows less than 100 gpm, a skid mounted station is available. This unit contains all of components of the vacuum station and simply must be installed inside a structure.

In addition to these spare parts, there are certain specialty maintenance tools and equipment that are needed.

TABLE 16
SPECIALTY TOOLS AND EQUIPMENT
FOR COLLECTION SYSTEMS

1 ea.	Portable vacuum pump
2 ea.	Portable vacuum chart recorders
100 ea.	Vacuum charts
3 ea.	Chart pens
2 ea.	0-20" W.G. magnehelic gauges
2 ea.	0-50" W.G. magnehelic gauges
1 ea.	12 VOLT DC submersible pump
15 ft.	Pump discharge hose
2 ea.	No-hub torque wrenches
2 ea.	Vacuum gauges
1 ea.	Flexible mercury manometer
1 ea.	Controller test box
1 ea	Pipe locator

The vacuum station also requires spare parts. These range from spare pump seals to fuses. Specialty items that should be considered are:

TABLE 17
SPECIALTY EQUIPMENT
FOR VACUUM STATION

1 ea.	Inductance probe
1 ea.	Probe transmitter
1 ea.	Probe microprocessor card
2 ea.	Vacuum switch
2 ea.	Vacuum gauge
1 ea.	Auto dialer microprocessor card

Especially vital for the vacuum station are spare microprocessor-based electronic components. This type of equipment is used for the level controls and the fault monitoring systems and is very sensitive to power spikes. These system components are the two most important parts of the station, as they essentially operate and monitor the system. Losing either to some type of failure will cause short term problems, such as loss of vacuum or discharge pump malfunctions. Not having spare equipment amplifies the problem since this would result in the system being operated manually. This would require an operator on a continual basis (until the spare part arrived) to cycle both the vacuum pumps and the sewage pumps manually.

III. VACUUM SEWER SYSTEMS

D. SYSTEM DESIGN CONSIDERATIONS

SECTION D

SYSTEM DESIGN CONSIDERATIONS

1. Hydraulics

a. Design Flows and Their Variabilities

AVERAGE DAILY FLOWS

Fundamental to the design of a sewer system is the determination of design flows. An allowance of 100 gallons per capita-day (gpcd) has been used as a general rule in the design of conventional sewers systems. However, that general rule may allow for more infiltration than may occur when vacuum sewers are used, and it allows for some amount of commercial and industrial use that may not be present in vacuum sewer design. Experience with vacuum sewers has shown a lower allowance to be more in order. If available, water use records should carefully be analyzed and a per capita use established.

During the early stages of pressure sewer development, extensive investigations were made into domestic water consumption during periods of low outside water use, with the correlation that water consumption would closely parallel sewer flow. These studies showed per capita flows ranging from 40 to 60 gpcd. Flow measurements were made on conventional sewers serving residential communities during periods

cycle discharge, and an average time setting of 6 seconds, a vacuum valve would be required to open and close 3 times in a minute, with a "rest" of only about 20 seconds between cycles. This may not present a problem to a valve that is relatively close to the vacuum station, connected to a 6" main. A different situation exists for a valve at the far end of the system that is connected to a 4" main. Vacuum response (the ability of the vacuum main to quickly recover to the same level of vacuum that existed prior to the cycle) is of absolute importance in vacuum sewer design. Vacuum response is a function of line length, pipe diameter, number of connections, and amount of lift in the system.

Should a situation exist that is cause for concern, the designer should consider using a buffer tank to attenuate the peak flows. In this case, the idea is not for the valve to keep up with incoming flow, but rather to use tank reserve volume to prevent backups until the valve is capable of emptying the tank.

DESIGN FLOWS

Design flows are maximum flow rates expected to occur once or twice per day, and are used to size the vacuum sewer mains as well as the various vacuum station components. Flow rates in excess of design flows can occur under certain situations (See Pressure Sewer section, this manual, Chapter ---, page ---), so design flows should not be taken as the maximum flow rate possible to occur.

In the Pressure Sewer section of this manual, Bowne describes various studies of flow versus equivalent dwelling units (EDU's). This is graphically represented by Figure --- in Chapter II.D of that section. Bowne developed a equation for estimating design flow based on the number of homes to be served. This equation is as follows:

$$Q = AN + B$$

Where Q = Design flow (gpm)

A = A coefficient selected by the engineer, typically 0.5

N = Number of EDU's

B = A factor selected by the engineer, typically 20

In the usual form, the equation is Q = 0.5N + B, but may be varied to account for anticipated high water use, to allow for a greater safety factor, and to allow for I&I.

b. Minimum Flow Velocities in Pipes

The term "self cleaning velocity" refers to the flow velocity required to convey solids along with the water carrier. To maintain an unobstructed pipeline, that velocity should be sufficient to transport grit that may be present in the wastewater, to prevent grease plating on the crown of the pipe and to scour and resuspend previously settled matter.

In the Pressure Sewer section of this manual, Bowne discusses an equation by Camp from the WPCF Manual of Practice #9, in which self cleaning velocity is described. The conclusion reached is that the required minimum velocity for self cleaning is 2 to 3 fps.

Velocities in the typical vacuum sewer range from 15 to 18 fps, obviously well above the minimum required for self cleaning. A common claim from the manufacturers of vacuum sewer components is that there has never been a blockage reported in a vacuum system. This may be a rather strong claim; however, the high transport velocities suggest that the probability of blockages occurring are indeed remote.

C. Applicable Equations

An understanding of the vacuum transport process is needed by the system designer. With the saw tooth profile, and as long as no vacuum valves are operating, no sewage transport takes place. All sewage remaining in the sewers will lie in the low spots. Since the sewage will not seal the bore of the pipe in these static conditions, little vacuum loss is experienced throughout the system when low or no flow is occurring.

When a sufficient volume of sewage accumulates in the sump, the vacuum valve cycles. The differential pressure that exists between the sewer main and atmosphere forces the sump contents into the main. While accelerating, the sewage is rapidly transformed into foam and soon occupies only part of the pipe cross section so that the momentum transfer from the air to water takes place largely through the action of shear stresses. The magnitude of the propulsive forces starts to decline noticeably when the vacuum valve closes but remain important as the air continues to expand within the pipe. Eventually friction and gravity bring the sewage to rest at a low spot. Another valve cycle, at any location upstream of the low spot, will cause this sewage to continue its movement toward the vacuum station.

Vacuum systems are designed to operate on two phase air to liquid flows with the air being admitted for a time period twice that of the liquid. Open time of the AIRVAC valve is adjustable; hence, various air to liquid ratios are attainable.

Normally, the vacuum pumps are set to operate between 16 and 20-in. Hg of vacuum. The minimum vacuum of 16-in. Hg results in a total available head loss of 18-feet. Five feet of this head loss is required to operate the vacuum valve, leaving 13-feet available for sewage transport. The summation of friction loss and static lift from any one point on the sewer network to the vacuum station must not exceed 13-feet. This relationship is expressed by the following formulas:

$$Vc = Vs - Vv$$

Where Vc = Vacuum available in the collection system for transport (ft.)

Vs = Min. vacuum available at the vacuum station (typically 16-in. Hg which equals 18-ft. of water)

Vv = Vacuum required to operate the vacuum valve (5-in. Hg which equals 5-ft. of water)

With Vc = Static Loss + Friction Loss, and the normal values substituted in the above equation, the equation is simplified to:

Static Loss + Friction Loss = 13 ft.

Figure 10 is a sample calculation sheet, developed by AIRVAC for use in determining system hydraulics.

AIRVAC®
Vacuum Sewerage System

PROJECT _____ PROJECT NUMBER _____ STATION _____

LINE _____ AIR/LIQUID _____ MAX FLOW _____ DATE _____

STATION TO STATION	LINE LENGTH	Q MEAN	Q ACC'M	H_L/ 100'	HEAD LOSS LINE	STATIC LOSS	TOTAL LOSS LINE	ACC'M HEAD LOSS	PIPE SIZE				NUMBER AIRVAC® VALVES
									3"	4"	6"	8"	

FIGURE 10
SAMPLE CALCULATION FORM

REPRINTED COURTESY OF AIRVAC

STATIC LOSSES

Static losses are those incurred by using lifts, or vertical profile changes. Profile changes are accomplished by using two 45-degree fittings joined by a section of pipe. For efficient use of the energy available, profile changes should be as small as possible. Numerous lifts are recommended over one large lift. Table 1 shows the recommended lift height for various pipe sizes;

TABLE 1
RECOMMENDED LIFT HEIGHT

Pipe Diameter	Lift Height
3 in.	1.0 ft.
4 in.	1.0 ft.
6 in.	1.5 ft.
8 in.	1.5 ft.
10 in.	2.3 ft.

Static losses are calculated by subtracting the pipe diameter from the lift height (Figure 11).

Static Loss = Lift Height - Pipe Diameter

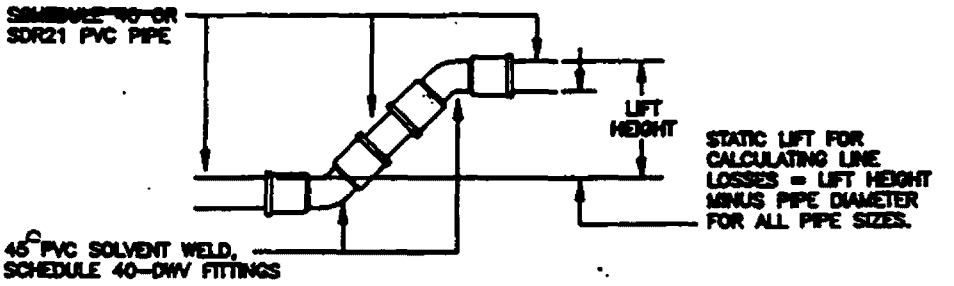

FIGURE 11
STATIC LOSS DETERMINATION

FRICTION LOSSES

Friction loss charts for SDR 21 PVC pipe and a 2:1 air/liquid ratio have been developed by AIRVAC, and are contained in their design mamual. Friction losses are only calculated for sewers that are laid between 0.2% and 2.0% fall. Friction losses in falls greater than 2.0% are to be ignored.

The friction tables, along with the system calculation sheets, will give the designer a conservative result, since the calculation sheets assume all flow inputs occur simultaneously resulting in a cummulative flow rate. In reality, this will rarely occur. Because of the anticipated nature of the system flow, some engineers have totally ignored friction losses in some past projects, with successful operating results. Despite this success, ignoring friction losses is not recommended.

The hydraulic calculations should commence including friction. A separate calculation can then be made to see how much of the total loss is static versus friction. Assuming proper line sizing has been done, some liberties may been taken with respect to friction losses, depending on the particular characteristics of the system. This should only be done by those with vacuum design and operation experience and in no case, without written approval of the manufacturer.

2. Mains, Services, and Building Sewers

a. Mains

GEOMETRY

The geometry of a vacuum sewer system is similar to that of a water distribution system. Rather than looped, however, it is normally in a dendriform pattern.

It is desirable to have the vacuum station located as centrally as possible. This lends itself to a system with multi-branches. This is a very important, as multiple main branches to the vacuum station give added operating flexibility. For example, with a system having 3 branches serving 300 customers, the worst case scenerio is that 100, or one-third, of the customers may be without service while a problem is corrected. By contrast, the worst case scenerio assuming a similarly sized system with one branch would have all 300 customers out of service.

When laying out a vacuum system, the designer should select pipe runs that:

* Minimize lift
* Minimize length.
* Equalize flows on each main branch

The length of collection lines are governed by two factors. These are static lift and friction losses. As previously discussed, the summation of these two amounts generally cannot exceed 13 feet. Due to restraints placed upon each design by topography and sewage flows, it is impossible to give a definite maximum line length. One operating system has a single main line branch exceeding 17,000 feet in length.

Vacuum sewer design rules have been developed largely as a result of studying operating system. Important design parameters are shown in the following table.

TABLE 2
MAIN LINE DESIGN PARAMETERS

Minimum distance between lifts	20 ft.
Minimum distance of 0.2% slope prior to a series of lifts	50 ft.
Minimum distance between top of lift and any crossover connection	6 ft.
Minimum slope	0.2%

TABLE 3
GUIDELINES FOR
DETERMINING LINE SLOPES

For This LineSize:	Use Greater of:
4" Mains	* - 0.2% * - Ground slope * - 80% of pipe diameter (between lifts only)
6" Mains	* - 0.2% * - Ground slope * - 40% of pipe diameter (between lifts only)

Table 4 shows at what length the 0.2% slope will govern versus the percentage of pipe diameter for the slope between lifts.

TABLE 4
GOVERNING DISTANCES
FOR SLOPES BETWEEN LIFTS

Pipe Diameter	Distance	Governing Factor
4"	Less than 135 ft.	80% of pipe dia.
4"	Greater than 135 ft.	0.2% slope
6" & larger	Less than 100 ft.	40% of pipe dia.
6" & larger	Greater than 100 ft.	0.2% slope

PIPE SIZING

AIRVAC has developed a table recommending maximum design flows for each pipe size. Table 5 shows these recommendations.

TABLE 5
MAXIMUM FLOW
FOR VARIOUS PIPE SIZES

Pipe Diameter (in)	Maximum flow (gpm)
4	55
6	150
8	305
10	545

Substituting the values of maximum flow (Q) from Table 5 into Bowne's simplified equation, (Q=.5N+20) and solving for N, will give the maximum number of homes served for each line size. Table 6 shows these results.

TABLE 6
MAXIMUM NUMBER
OF HOMES SERVED
FOR VARIOUS PIPE SIZES

Pipe Diameter (in)	Number of homes served
4	70 *
6	260
8	570
10	1050

* Note: The recommended maximum length of any 4" run is 2800 feet, which may limit the amount of homes served to a value less than 70.

The values in Table 6 should be used for planning purposes or as a starting point for the detailed design. In the latter case, estimated site specific flow inputs along with the friction tables should be used in the hydraulic calculations. A correctly sized line will yield a relatively small friction loss. If, when going to the next larger pipe size friction loss is significantly reduced, the line was most likely undersized.

Experience has shown that there is little economy in using 3-inch pipe for mains. For this reason, 4-inch is the minimum recommended main size.

ROUTING

In most cases, vacuum sewer mains are located outside of and adjacent to the edge of pavement and approximately parallel to the road or street, which reduces the expenses of pavement repair and traffic control. In areas subject to unusual erosion, the preferred location is often within the paved area. This location is also favored by some municipalities as being an area where subsequent excavation is less likely and more controlled, and therefore a location more protected from damage.

One of the major cost components of a vacuum system is the valve pit setting. With two or more homes sharing one setting, overall system construction costs can be significantly reduced, resulting in a major cost advantage. To do this, however, may require the main line to be located in private property, typically in the back yard. There are two disadvantages to this type of routing. First, it requires permanent easements from the property owner, which may be difficult to obtain. Second, it will require the operating personnel to venture onto private property during preventive and emergency maintenance, a move which may not be particularly welcomed. The designer should carefully consider the tradeoff of reduced costs to the social issues prior to making the final routing decision.

An advantage to the use of vacuum sewers is that the small diameter PVC pipe used is flexible and can be easily routed around obstacles. This feature allows vacuum sewers to follow a winding path as necessary. The pipe should be bent in a long radius if possible, not in a radius less than that recommended by the pipe manufacturer. In the Pressure section of this manual, Bowne presents an equation from the Uni-Bell Handbook of PVC Pipe in which the minimum radius of bending is defined. This equation is:

$$Rb/OD = 200$$

Where Rb = Minimum radius of the bending circle
OD = Outside diameter of the pipe

Vacuum sewers are normally buried with a cover of 36-inches. In a few cases where economy is paramount and subsequent damage is unlikely, they are buried with less cover. The depth of bury in colder climates is usually dictated by frost penetration depths. In the northern U.S. they are often placed at 4 to 5 feet. Even though line freezing is a concern with most engineers, it usually is not a problem with vacuum mains. The reason is that the design is done to prevent the sealing of the full bore of the pipe in static conditions, making line freezing only a remote possibility. The high velocities and small cycle volume also work to lessen this possibility.

The separation of vacuum sewers from water supply mains and laterals often requires the vacuum sewer be buried deeper than would be required for other reasons. In most instances the separation requirements are dictated by state health departments. These requirements may vary from state to state. A table from the Pressure Sewer section of this manual shows typical requirements for sewer line/water line sepation, and is repeated below:

TABLE 7
TYPICAL REQUIREMENTS
FOR
SEPARATION OF SEWER LINES FROM WATER LINES

Parameter	Requirement
Parallel installations	Locate sewer as far as practical from water main. Minimum separation 10 feet. If sewer is closer than 10 feet from water main, sewer is to be located 12 inches lower than the water main. In some jurisdictions, when closer than 10 feet, sewer is to be of water main materials or encased. Other jurisdictions allow water and sewer in the same trench if the sewer is 12 inches lower.
Crossings	Crossing is to be as nearly perpindicular as practical. Sewer to be 12 inches lower than water main. Some jurisdictions require that no joints be used in the sewer main within 10 feet of the crossing.

Profiles of the mains should always be shown on the plans. Slopes, line sizes and lengths, culvert and utility crossings, inverts, and surface replacements are typically shown on the profiles (See Section B).

Culvert and utility crossings often dictate numerous variations in the depth of burial of vacuum sewer mains, with many resulting sags and summits in the pipeline profile. Unlike pressure mains, where air accumulates at a summit requiring an air release valve, vacuum sewers are not affected by high points in the profile. The sags, however, may present a problem, as they typically will add lift to the system. In addition, if not designed and constructed properly, a sag may trap sewage at low flow periods blocking off the low part of the sewer. When variations are regarded as detrimental, reaches of the vacuum sewer main may be placed at a particular depth to allow for the crossing without using a lift.

To minimize damage to the vacuum sewer main caused by subsequent excavation, route markers are sometimes placed adjacent to the main, warning excavators of its presence. Accurate as-constructed plans are helpful in identifying the pipeline location, and a cable buried with the main can be induced with a tone so the main can be field located using common utility locating equipment.

A warning tape marked "vacuum sewer" is sometimes placed shallowly in the pipeline trench to further notify excavators. When the tape is placed lower in the trench, e.g., adjacent to the pipe, it is called an "identification" tape. The tape can be metalized so it can be detected with utility locating devices. Most tapes cannot be induced with a tone at a significant depth, so metalized tape should be placed shallowly to be detected. It is also very important to make sure the tape does not become folded or twisted during its placement or the detectable surface area will be reduced.

TRENCH SECTION

Trenching may be accomplished using a backhoe, wheel trencher, or chain type trencher. The choice of equipment is usually dictated by the contractor based on the material to be excavated as well as topography and available working space.

Imported material termed "pipe zone backfill" is often placed to surround the main several inches if material excavated from the trench is regarded as unsuitable for use as that material. Pipe zone backfill is usually granular, such as pea gravel or coarse sand. Fine sand or soil is generally not as desirable as it bulks, rather than flows, into place under the pipe haunching.

The remaining backfill material required is often specified by the agency controlling the road or street, especialy if the mains are located within the pavement.

In some cases a lean cement-sand slurry is used for backfill. This option is particularly attractive when a trencher is used, the mains are located within the pavement, and prompt restoration for traffic control is important.

PIPE MATERIALS

PVC or ABS thermoplastic pipe are normally used for vacuum sewers. In certain cases, DCIP has also been used, assuming the joints have been tested and found suitable for vacuum service.

The most common PVC mains are iron pipe size (IPS) 200 psi working pressure rated, standard dimension ratio 21 (Class 200 SDR 21 PVC). Class 160, SDR 26 PVC has also been used. From a pressure standpoint, the lower class pipe is acceptable. However, thinner wall pipe is more likely to be damaged during installation. Further, there is little cost savings between SDR 21 and SDR 26 when the excavation, backfill, and surface restoration are considered. For these reasons, Cl 200, SDR 21 is recommended.

PVC pipe has a high coefficient of thermal expansion; about 3/8-inch of length variation for 100 feet of pipe per 10 degrees Farenheit change in temperature.

$$\text{Coefficient in/in/oF} = 3.0 \times 10^{-5}$$

Considerable temperature changes will be experienced during pipeline installation, and some degree of temperature change will occur during operation, with climate changes and effluent temperature changes. To reduce expansion and contraction induced stresses, flexible elastomeric

joint ("rubber ring" joint) pipe is preferred to be used. If solvent welded joint pipe is used, the pipe manufacturers recommendations for installation regarding temperature considerations should be followed. The Uni-Bell Handbook of PVC Pipe also provides guidance as to proper practices.

In the past, the fittings most often used were the solvent-weld, Drain, Waste and Vent (DWV) type. These types are more commonly available than gasketed joint fittings (one major line component, the wye required for each connection to the main, is not even made in gasketed PVC). Expansion and contraction, while a concern if the entire system were solvent-welded, are allowed for in the main line pipe joints, which typically are gasketed.

Presently, there is a move toward eliminating all solvent-welding. At least of one major fitting manufacturer is considering making gasketed wye fittings. Until this happens, some contractors are using spigot adapters (an adapter fitting that can be solvent welded in a controlled environment into each of the three legs of the wye resulting in a gasketed joint at each of the three legs (Figure 12).

FIGURE 12
SPIGOT ADAPTOR DETAIL

b. Service Lines

GEOMETRY

Vacuum sewer service lines run from the vacuum main to the valve pit. Typically these lines are near and parallel to property lines. If either the valve pit or main line is on private property, the service line likewise will be on private property.

It is good practice to boldly field mark the location of the service line with properly identified lath a few days prior to installation. This serves as a reminder to the property about the intended location and may cause the property owner to recognize some reason that the location should be changed. It also serves as an advance notice to neighbors if property lines are in doubt.

Most municipalities prefer locating the service line where it will not be driven over. Others, however, prefer locating the service line within the paved driveway. The reasoning is that subsequent excavation and associated damage to the service line is less likely within the paved section.

Service lines should be located distant from potable water lines to reduce the possibility of cross contamination. They should also be distant from other buried utilities if possible, due to the possibility of damage caused by subsequent excavations for maintenance or repair of those utilities.

All connections to the main, called crossover connections, are made "over the top" (Figure 13). This is accomplished using a vertical wye and a long radius elbow. Due to the restraints placed upon the depth of sewers by the connecting sewers entering "over the top", engineers should consider the ground cover required on these connections at the design stage.

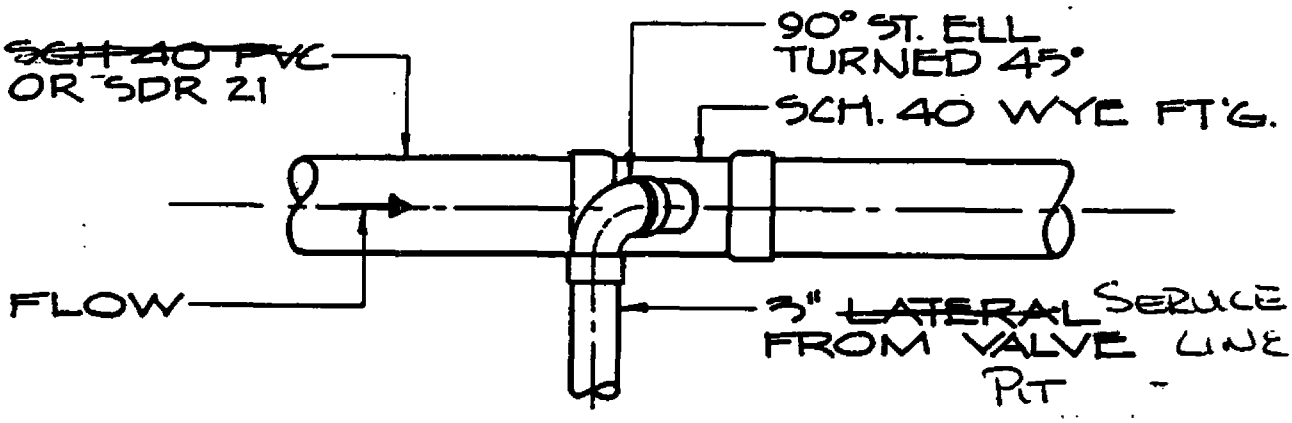

FIGURE 13
CROSSOVER CONNECTION DETAIL

Table 8 gives design parameters when lifts are required in the service line.

TABLE 8
SERVICE LINE DESIGN PARAMETERS

Minimum distance from lift to valve pit	5 ft.
Minimum distance from lift to crossover	5 ft.
Minimum slope between lifts	2-in or 0.2% (larger)

PIPE SIZING

Service lines typically are 3-inch in diameter. An exception to this occurs when a buffer tank is used. Buffer tanks are used for large flows which will result in frequent valve cycles. To maintain good vacuum response at the buffer tank, a 6-inch service line is recommended.

TRENCH SECTION

The use of chain-type trenchers is sometimes specified for service line installation where soil types allow as they cause less disruption to the property owner's yard than does a backhoe. Rocky soils and some clayey soils that will not self clean from the trencher teeth may be impractical to excavate using a trencher.

Street crossings are often accomplished by the bore method in which an auger is used and a steel casing is pushed in the resulting opening under the street. The casing acts as a sleeve for the service line that is installed inside. Other street crossings are "free bored" by the use of a "hog". Open cutting of the street is done where boring is impractical.

Service lines in vacuum systems are buried a minimum of 30-inches, since the vacuum line that exits the valve pit does so at a depth of 27-inches.

If a trencher is used, bedding and backfill is usually native material taken from the trench excavation. When the service lines are installed under travelled ways or when rock excavation is encountered, surrounding the service line with imported pipe zone backfill is advised.

Many contractors use a backhoe for the service line excavation. The reason for this is simple; a backhoe is required for the excavation of the valve pit which typically is located close to the main sewer. Many times this results in over-excavation of the service line trench. Over-excavation, coupled with the use of fittings which are typically required between the valve pit and main, is a recipe for future problems if proper bedding and backfill material is not used.

Since the native material and intended contractor equipment is not always known, it is recommended that the contract documents specify surrounding the service line with imported pipe zone backfill.

PIPE MATERIAL

As with the vacuum sewer mains, Class 200, SDR 21 PVC pipe typically is used for the service lines. Solvent-welded DWV fittings are used, although rubber ring fittings are becoming more common.

c. Building Sewers

The term building sewer refers to the gravity flow pipe extending from the home to the valve pit setting. In many cases, state or local authorities regulate installations of building sewers. The Uniform Plumbing Code is often referenced.

For residential service, the building sewer should be 4-inch and slope continously downward at a rate of not less than 1/4-inch per foot (2-percent grade). Desirably, the valve pit setting should be located near the home so the building sewer is short, with less need for maintenance and less opportunity for infiltration. Line size for commercial users will depend on the amount of flow, with a minimum recommended size of 6-inches.

Bends should be avoided in building sewers, and a cleanout used for each aggregate change in direction exceeding 135 degrees.

Infiltration via leaking building sewers has been common, as has the connection of roof or yard drains. A quality inspection during homeowner connection is advised to determine if these situations exist. If so, steps should be taken to require their elimination prior to final homeowner connection.

To minimize the risk of damage to the fiberglass valve pit during homeowner connection to the system, a stub-out pipe of sufficient length (typically 6-feet) from the valve pit is recommended. In conventional gravity sewers, EPA eligibility ends at the wye, with the gravity service pipe being an ineligible item. The same reasoning would suggest that eligibility in a vacuum system would end at the valve pit connection. However, the additional 6-foot stub-out has been ruled to be a required part of the valve pit installation by some Regions of EPA, resulting in it being deemed an eligible item. Eligible or not, the 6-foot stub-out is recommended.

If the home does not have a cleanout within it, one should be placed outside and close to the home. Some agencies prefer having a cleanout at the dividing line where agency maintenance begins (i.e., the end of the 6-foot stub-out pipe).

3. Valve Pit Settings

a. General

FIBERGLASS SETTINGS

The premanufactured, fiberglass type of valve pit setting is by far the most common. This type of setting is comprised of four main parts; the bottom chamber (sump), the top chamber (valve pit), the plate that separates the two chambers (pit bottom), and the lid (Figure 14).

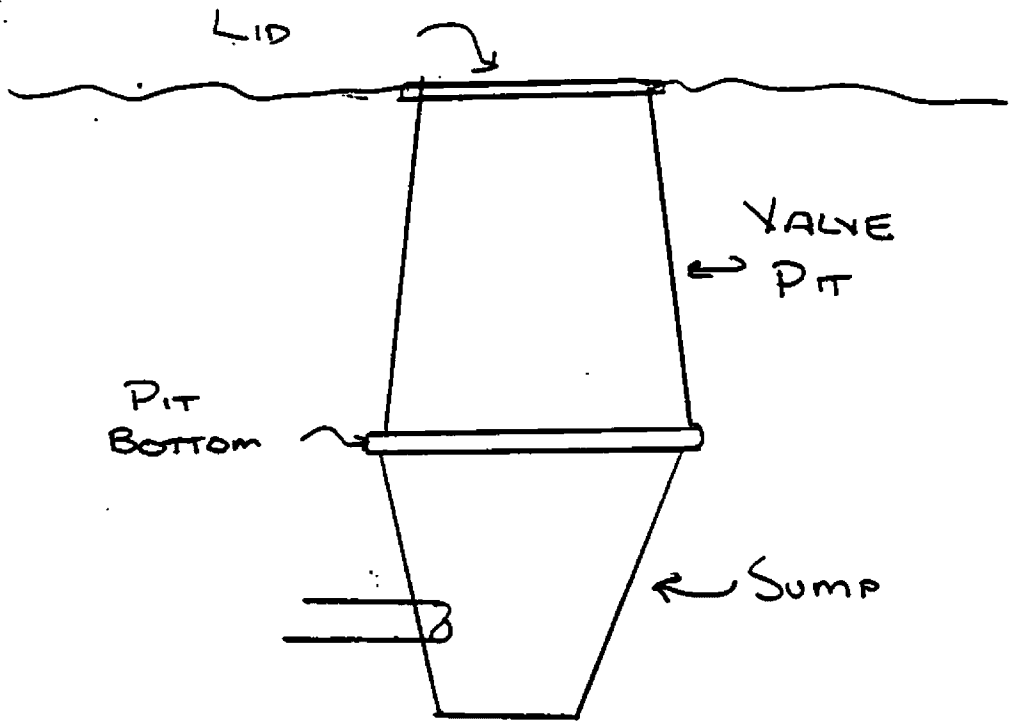

FIGURE 14
TYPICAL FIBERGLASS
VALVE PIT SETTING

Wastes from the home is transmitted to the sump via the building sewer. This sewer enters the sump 18" above the sump bottom. Up to four separate building sewers can be connected to one sump, each at 90 degrees to one another. A tapered shape is used to facilitate the backfilling procedure.

The sumps have a wall thickness of 3/16" and are designed for H20 traffic loading at 2 feet of cover. Elastomer connections are used for the building sewer. Holes for the building sewers are field cut at the position directed by the engineer.

The sump is available in two different heights; 30-inches and 54-inches. Both are 18 inches in diameter at the bottom and 36-inches in diameter at the top, with the smaller size having a capacity of 55-gallons and the larger one 100-gallons.

The valve pit houses the vacuum valve itself. It is manufactured by the filament winding fiberglass process with a wall thickness of 3/16" and is suitable for H20 traffic loading. The valve pit is 36-inch diameter at the bottom and is conically shaped to allow the fitting of a 23 1/2 inch diameter clear opening cast iron frame and cover at the top. The depth is 42-inches. One 3 inch diameter opening, with an elastomer seal, is pre-cut to accept the 3-inch vacuum service line.

The pit bottom is made of reinforced fiberglass that is 1/4" thick at the edges and 5/16" thick in the center. These bottoms are molded by the resin inject process. Valve pit bottoms are provided with holes pre-cut for the 3-inch suction line, 4 inch cleanout/sensor line and the sump securing bolt holes. Sealing between the valve pit bottom and the sump is done in the field using a silicone or butyl tape rubber sealant. The pit bottom has a lip which allows the valve pit to simply rest on top of it.

Cast iron covers and frames, designed for H20 traffic loading, are typically used. The frame weight is generally 90 pounds and the lid weight about 100 pounds. When a lighter lid is desired, such as in non traffic situations, a light weight aluminum or cast iron lid may be used. These types of lids do not have frames, but rather are fitted to the valve pit through the use of two J-bolts. These lids should clearly be marked "Non-Traffic"

A shallower arrangement is possible, if so desired (Figure 15). This arrangement would be used in areas where high groundwater or poor soils exist and depth of the building sewers are very shallow.

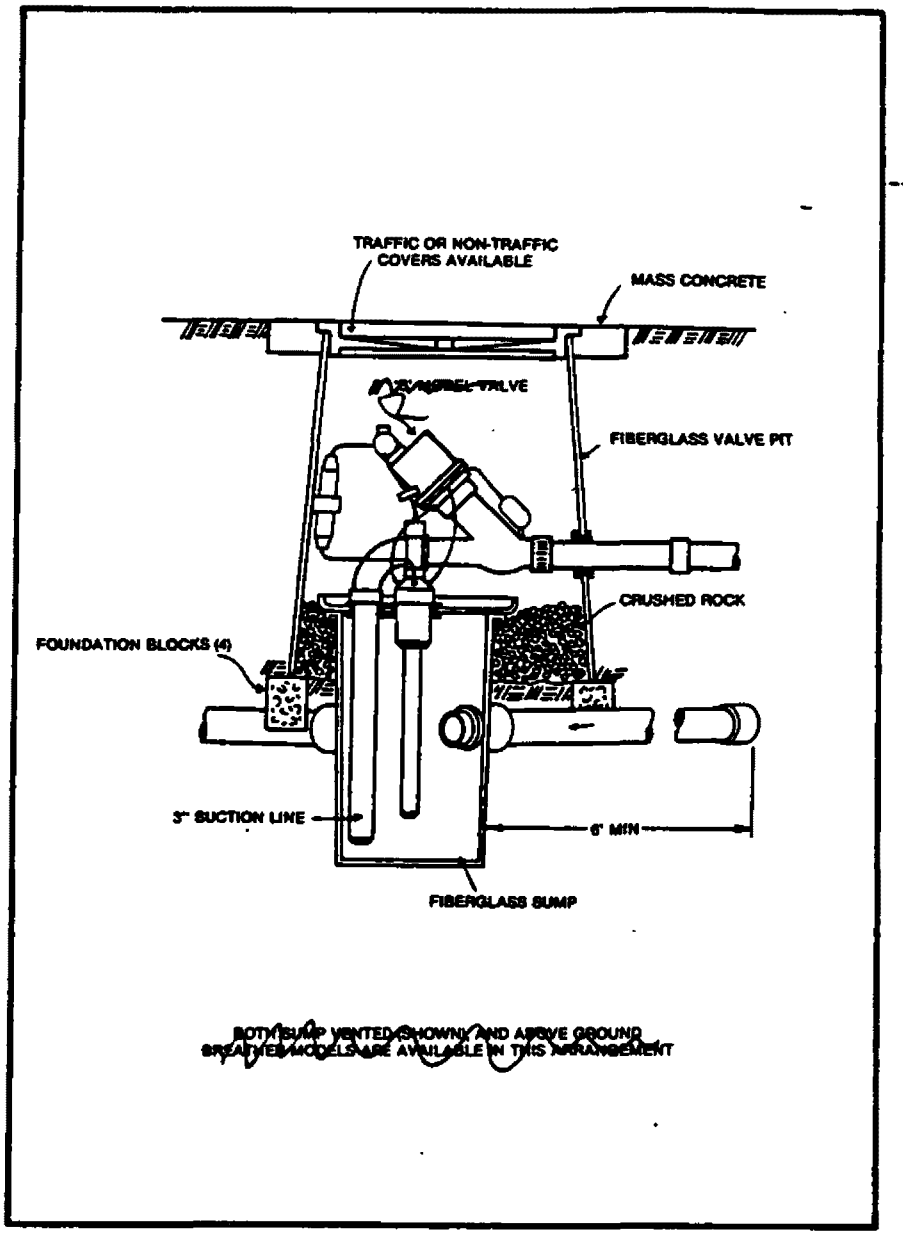

REPRINTED COURTESY OF AZUAL

FIGURE 15
SHALLOW FIBERGLASS
VALVE PIT SETTING

CONCRETE SETTINGS

Certain situations call for the use of concrete valve pit settings. These are described in Table 9.

TABLE 9
SITUATIONS THAT DICTATE
THE USE OF CONCRETE SETTINGS

* When the deepest fiberglass setting is not sufficient to accept the building sewer.

* When a large flow is anticipated requiring flow attenuation.

* When an interface between two system types (e.g., pressure and vacuum) is needed.

The deepest fiberglass setting is 8-feet deep. The building sewer depth at the valve pit setting is therefore limited to 6.5-feet, since the building sewer enters 18-inches above the bottom. Should a deeper setting be required, a concrete valve pit setting may be used. The maximum recommended depth for a concrete pit is 10 feet.

These type of settings are typically constructed of 4-foot diameter manhole sections, with the bottom section having a pre-poured 18-inch diameter sump (Figure 16). It is very important that all joints and connections be water tight to eliminate groundwater infiltration. Equally important is the need for a well designed pipe support system, since these tanks are open from top to bottom. The support hardware should be of stainless steel or plastic.

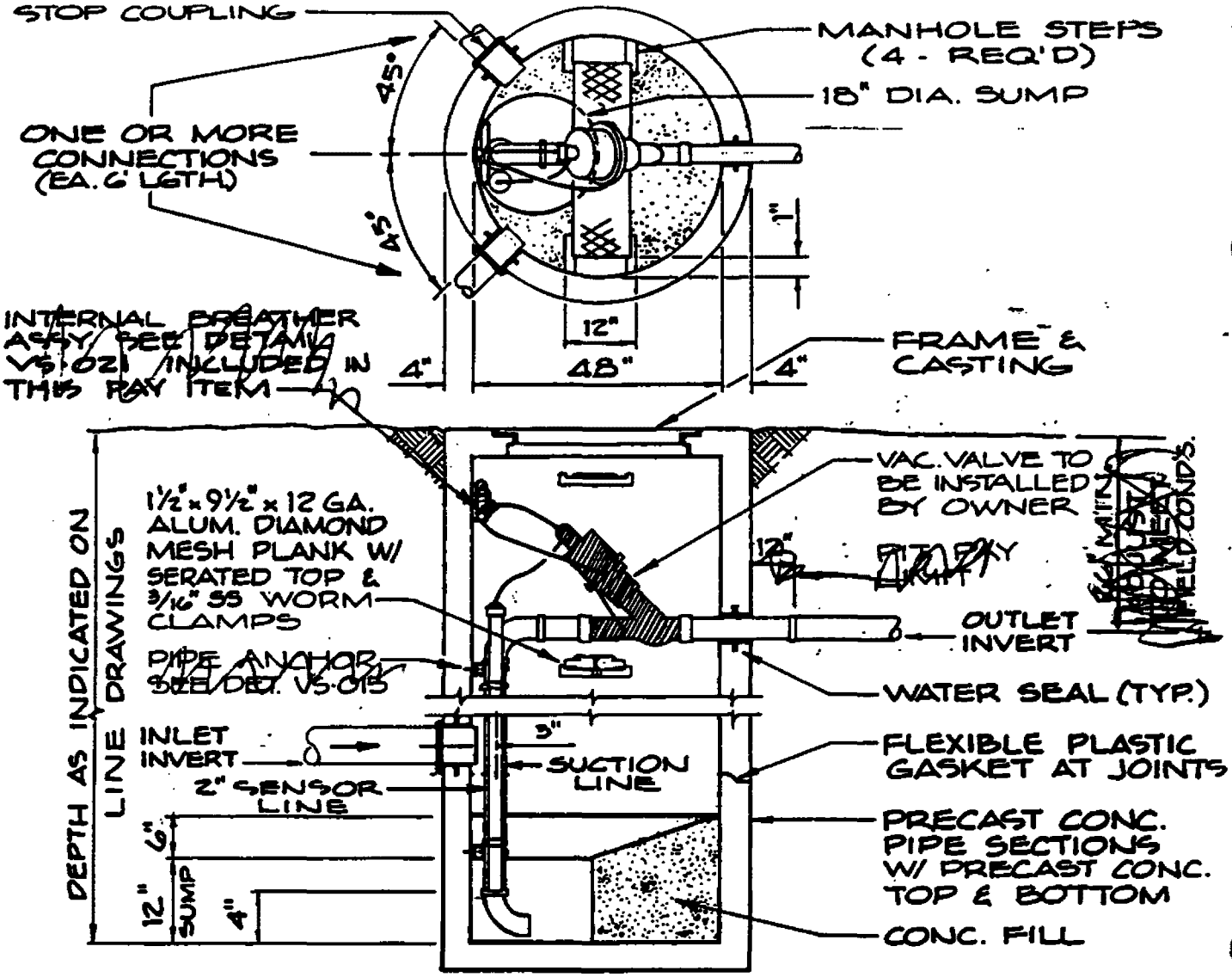

FIGURE 16
TYPICAL CONCRETE
VALVE PIT SETTING

Earlier in this section, the system hydraulics were discussed, with the general conclusion that 18-feet of system loss was available; 13-feet for the collection piping and 5-feet for the valve operation. The 5-feet generally corresponds to the amount of lift required to evacuate the sump contents, assuming the deepest fiberglass valve pit setting is used. Increasing this amount will result in a decreased amount available for the collection system. Depending on the specific location of the

deep setting required, the engineer may opt to serve the home by other methods. Should a deep concrete setting still be the choice, the engineer should receive written approval of the manufacturer.

For large flows that require attenuation, a buffer tank should be used. Buffer tanks are typically used for schools, apartments, nursing homes, and other large users. They are designed with a small operating sump in the lower portion, with additional emergency storage available in the tank.

Like the deep concrete valve pit settings, the buffer tank is typically constructed of 4-foot diameter manhole sections, with the bottom section having a pre-poured 18-inch diameter sump (Figure 17) The same water tightness and pipe support concerns apply to the buffer tank.

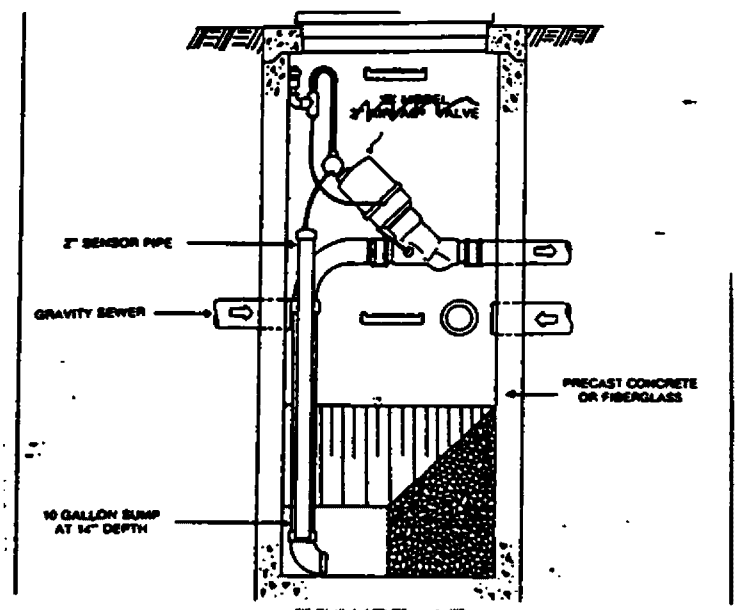

FIGURE 17
TYPICAL CONCRETE
BUFFER TANK

When an interface between two system types is needed, a dual buffer tank should be used. For example, a hybrid system may be used, with vacuum sewers serving the majority of the service area and pressure sewers serving the fringes. At some point, a transition will be needed between the pressure flow and vacuum flow.

A dual buffer tank is similar to a buffer tank, with the exception that it is larger to accomodate two vacuum valves (Figure 18). These tanks typically utilize 5-foot diameter manhole sections.

FIGURE 18
TYPICAL CONCRETE
DUAL BUFFER TANK

Dual buffer tanks may also be used if the single buffer tank does not have the capacity for the large flows. A single buffer tank has a 30 gpm capacity while a dual buffer tank has a 60 gpm capacity.

b. Appurtenances

ANTI-FLOTATION COLLARS

Anti-flotation collars are sometimes used on the fiberglass valve pit settings (Figure 19). Bouyancy calculations should be done to see if they are necessary. Past experience has shown that these collars are usually not needed. Should they be used, care must be taken during the valve pit installation as poor bedding and backfill may lead to settlement problems. Settlement of the concrete ring most likely will result in damage to the building sewer and/or the pit itself.

FIGURE 19
ANTI-FLOTATION COLLAR DETAIL

4. Vacuum Valves

a. General

The AIRVAC vacuum valve operates without the use of electricity. The valve is vacuum operated on opening and spring assisted on closing. System vacuum ensures positive valve seating.

The valves have a 3-inch opening and are made of schedule 80 ABS and have stainless steel shafts, delrin bearings and elastomer seals. The valve is equipped with a rolling diaphram type vacuum operator and is capable of overcoming all sealing forces and of opening using vacuum from the downstream side of the valve. All materials of the valve are chemically resistent to sewage and its gases.

The controller/sensor is the key component of the valve. This device relies on three forces for its operation: pressure, vacuum and atmosphere. As the sewage level rises in the sump, it compresses air in the sensor tube. This pressure initiates the opening of the valve by overcoming spring tension in the controller and activated a three-way valve. Once opened, the three-way valve allows the controller/sensor to take vacuum from the downstream

side of the valve and apply it to the actuator chamber to fully open the valve. The controller/sensor is capable of maintaining the valve fully open for a fixed period of time, which is adjustable over a range of 3 to 10-seconds. After the time period has elapsed, atmospheric air is admitted to the actuator chamber permitting spring assisted closing of the valve. All materials of the controller/sensor are fabricated from a plastic or elastomer that is chemically resistent to sewage and its gases.

Two types of vacuum valves are available: the Model D valve and the Model S valve. These valves are physically identical, but rely on a different piping/plumbing arrangement for their source of atmospheric air needed for proper controller operation.

MODEL D VALVE

As stated earlier, one of the three forces required for the proper operation of the controller is atmospheric air. The Model D valve gets this atmospheric air through a tube which is connected to an external breather pipe (Figure 20).

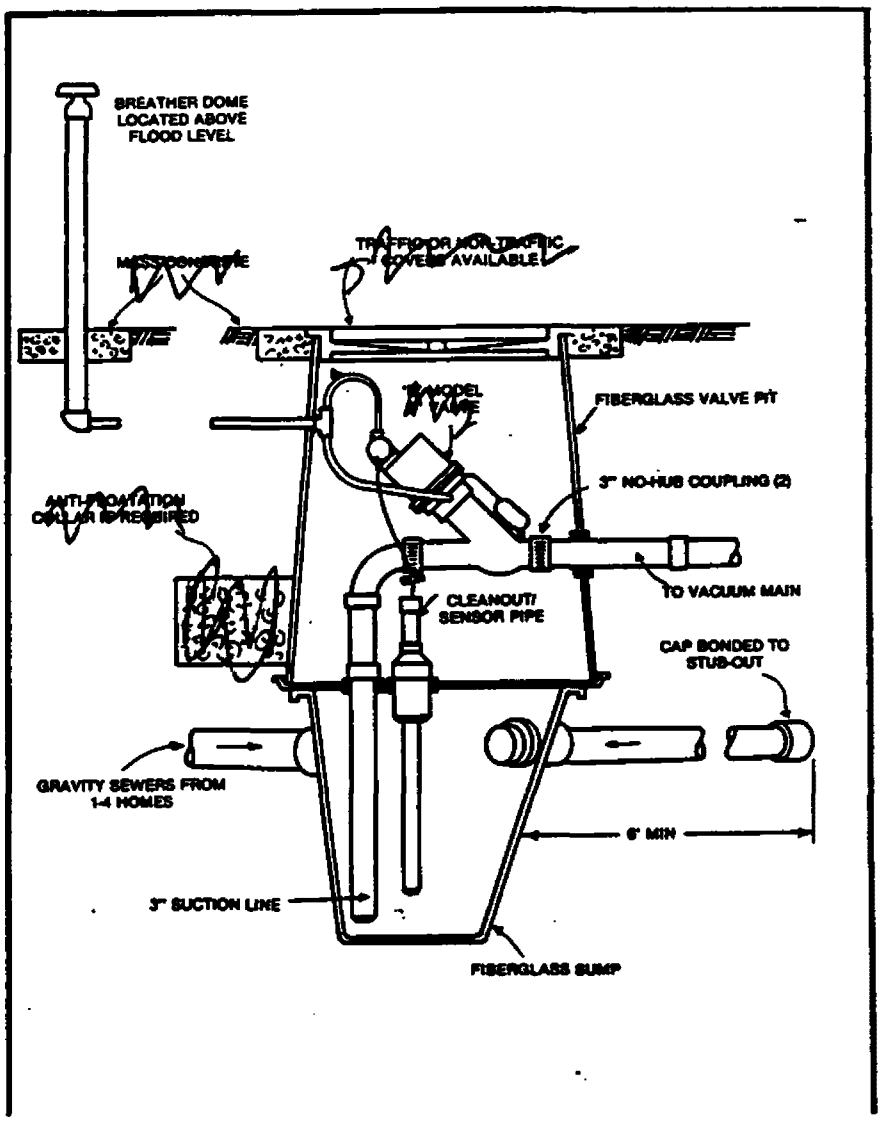

FIGURE 20
MODEL D VALVE

REPRINTED COURTESY OF AIRVAC

The Model D valve is the most reliable type since there is little chance of water entering the controller. However, some dislike this type of arrangement because of aesthetics. Some fear vandalism of the external breather, which would have a detrimental effect on system operation. Experience has shown that these are **perceived** problems, rather than **actual** problems.

MODEL S VALVE

The Model S valve is a "sump-vented" valve. One of the three controller tubes is connected to the cleanout/sensor piping. This piping extends into the lower sump, which is connected to the building sewer. The building sewer is open to atmospheric air through the 4-inch auxiliary vent (Figure 21).

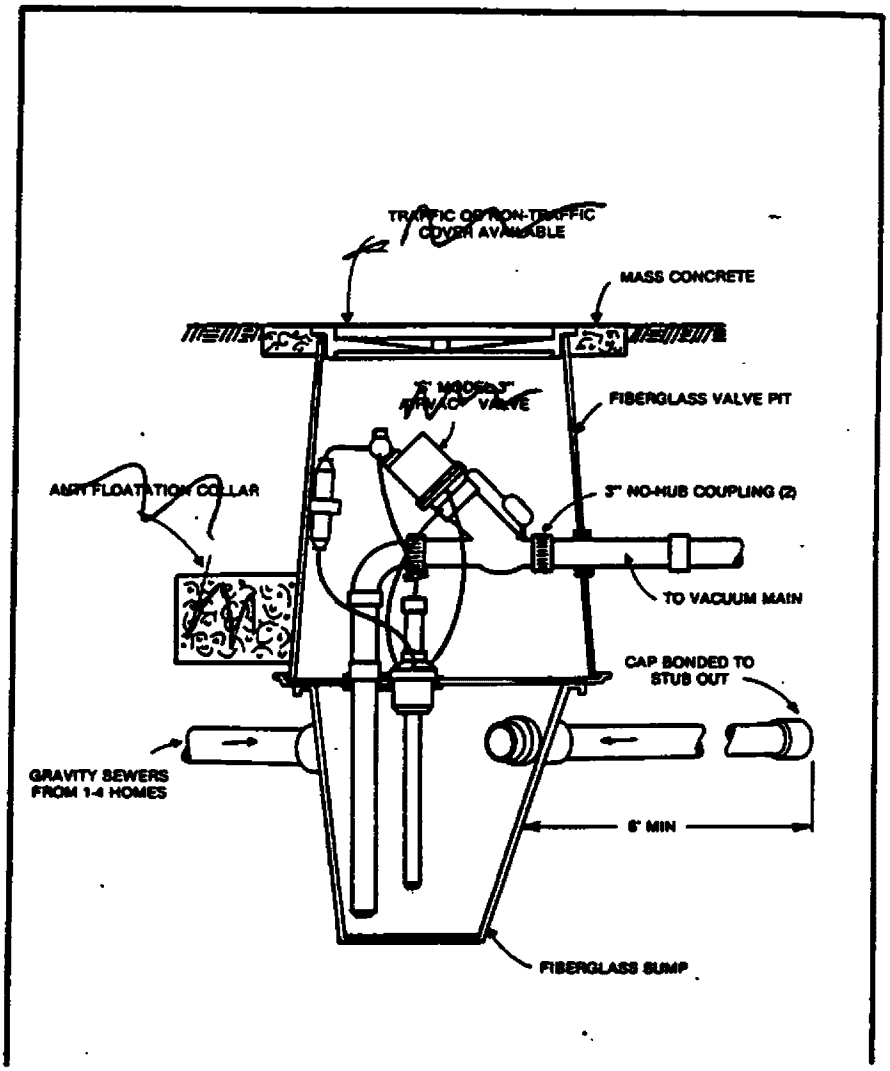

REPRINTED COURTESY OF AIRVAC

FIGURE 21
MODEL S VALVE
SUMP VENTED VALVE

While eliminating some of the concerns associated with the external breather, the Model S valve has potential problems of its own.

First, it is absolutely necessary that the sump be air and watertight. Should system vacuum be less than 5"-Hg, for whatever reason, the valve will not operate. Sewage will continue to fill the sump. If the sump is watertight, it will become pressurized, with a "bubble" of air trapped at the top of the sump. When sufficient vacuum is restored, the bubble of air will be used by the controller in the valve closing process. However, should water completely fill the bottom sump in the same scenerio, the valve will open and stay open since it will lack the atmospheric air needed for closure. This open valve will cause a loss of system vacuum, which may affect another valve at a different location in a similar fashion.

Second, the installation of the homeowner's buiding sewer becomes more critical. A belly in the building sewer will trap water and not allow the free flow of atmospheric air.

Some engineers have experimented with a blend of the two concepts, by utilizing a breather that gets its air from the **top** chamber. This has been successful in areas where there is no chance for surface water to enter the top chamber. The danger is that water may enter the top sump filling it to a level above the breather. This water will directly enter the controller and cause problems with valve closure.

In either the Model D or Model S valve, water in the top chamber is of no concern, assuming the controller itself is watertight. To prevent water from entering the top chamber has proven to be a difficult task. For this reason, venting from the top chamber is discouraged.

Changes in materials, pipe sizes, and supports have resulted in a more aesthetically pleasing and vandal proof external breather. Because the Model D arrangement is less susceptible to problems than the Model S, it is the recommended type.

Since the two valve types are physically identical, it is possible to convert from a Model S to a Model D, and vice versa, with little effort.

b. Appurtenances

EXTERNAL BREATHER

The external breather has been discussed in the previous section. An early version of this included an 1-1/2" galvanized pipe extending 2 to 3-feet above ground near the valve pit setting (Figure 22). A breather dome is needed to prevent clogging from small insects. This size of pipe was necessary for it to be self supporting. In addition, it was thought to be less susceptible to damage. This arrangemnt has been successfully used in many of the operating vacuum systems, although some perceived problems with aesthetics and vandalism still exist.

FIGURE 22
EARLY EXTERNAL BREATHER DETAIL

Some engineers have detailed an external breather that uses smaller diameter galvanized pipe (typically 3/4"). This pipe, and the breather dome, is clamped to a 4" x 4" post that is driven into the ground near the valve pit setting (Figure 23). This gives the arrangement a more permanent look, while also adding protection to the breather.

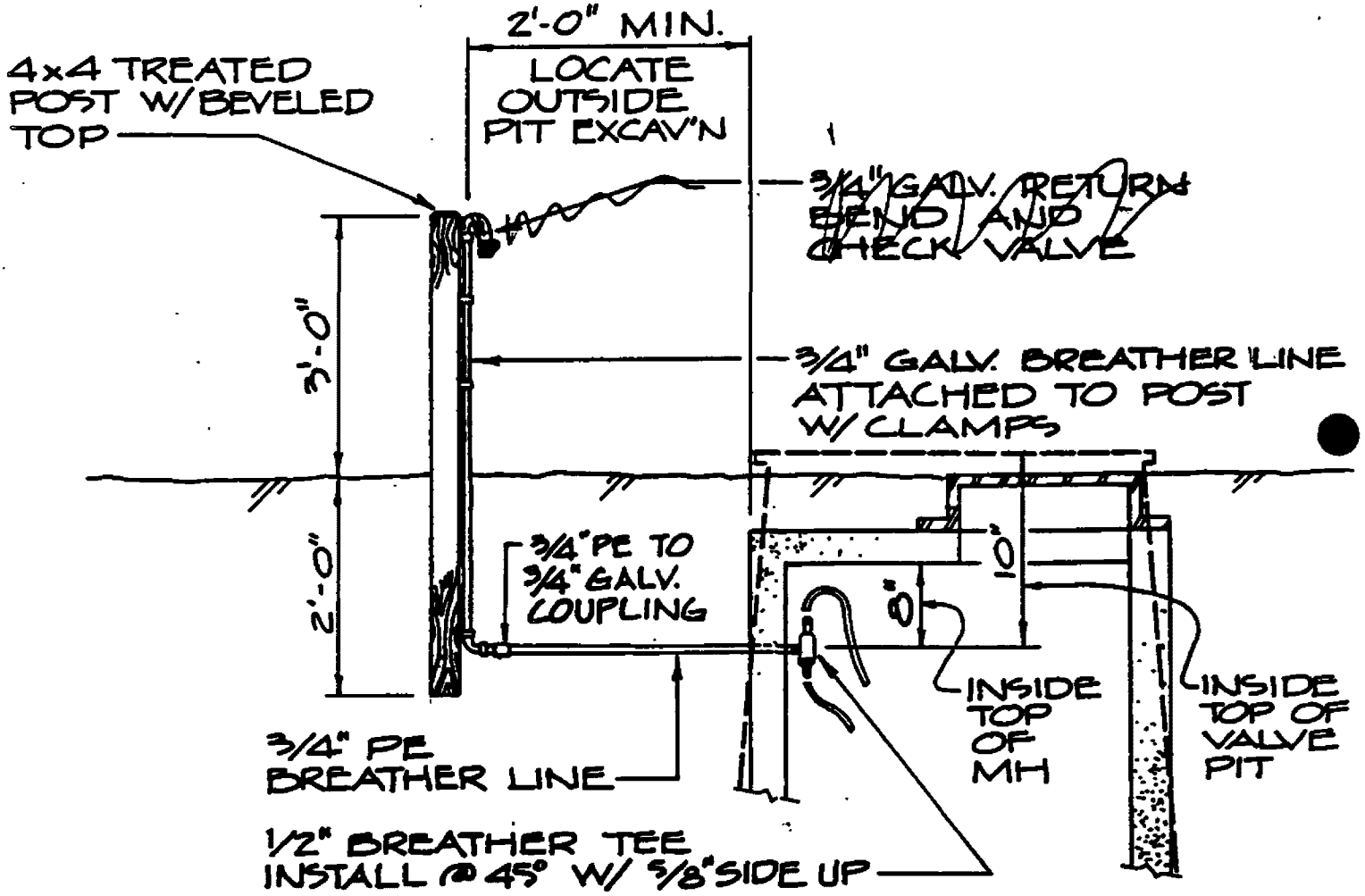

FIGURE 23
ALTERNATIVE EXTERNAL BREATHER DETAIL

AIRVAC also offers an alternative external breather arrangement. This consists of ----inch, ------ pipe that is anchored in the ground by concrete (Figure 24). This material is very flexible, making it virtually vandal proof. Its green color also adds to its appearance.

REPRINTED COURTESY OF AIRVAC

FIGURE 24
AIRVAC
ALTERNATIVE EXTERNAL BREATHER

No matter what arrangement is used, two items require attention. First, the entire piping system from the dome to the connection at the controller must be watertight. Second, the piping must slope toward the valve pit setting.

AUXILIARY VENT

A 4-inch PVC vent is required on the building sewer. Its purpose is to provide a sufficient amount of air to act as the driving force behind the liquid that is evacuated from the lower sump (see Chapter I, Section C.3.c for a discussion on system operation). With a Model S valve, a secondary function is to provide the necessary atmospheric air for proper controller operation.

The auxiliary vent is made of 4-inch PVC pipe and fittings (Figure 25). Most entities require it to be located against a permanent structure, such as the house or a wall. To prevent valve freezing in cold climates, the vent should be a minimum of 20-feet from the valve pit setting, thereby allowing the warmth from the sewage time to warm the air.

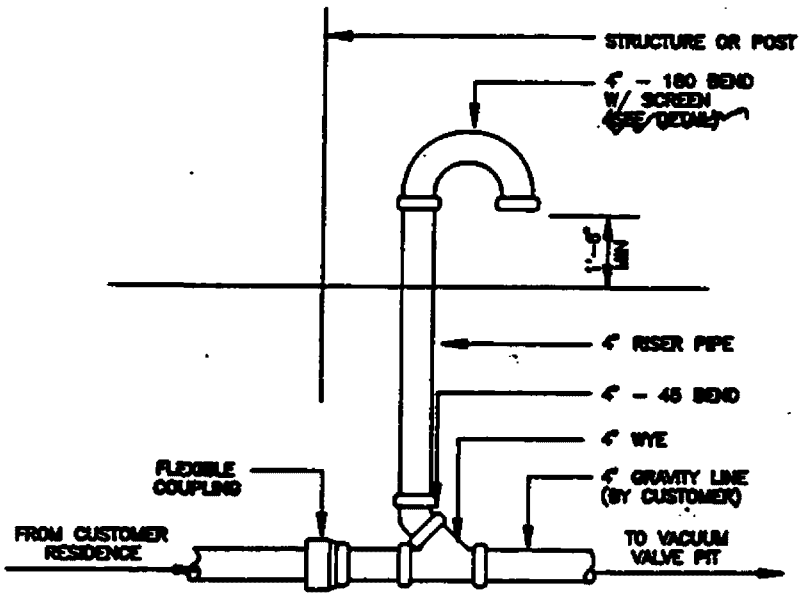

FIGURE 25

AUXILIARY VENT DETAIL

CYCLE COUNTER

To monitor the number of valve cycles, a cycle counter is available. This device is designed for mounting directly on the vacuum valve or the valve pit wall. The unit is enclosed in a watertight housing with a clear nylon top.

With this device, it is possible to monitor the number of cycles of a particular valve. Cycle counters typically are utilized where a large water use is expected in order to determine if the valve is reasonably capable of keeping up with the flow.

Some entitites use the cycle counter as a metering device. Knowing the number of cycles and the volume per cycle, one can estimate the amount of sewage through the vacuum valve over a given period.

Others use the device as a method of determining illegal storm connections to the vacuum sewer. The flow through the valve can be estimated and compared to metered water use. From this, it is possible to conclude if extraneous water is entering the vacuum sewer and generally in what amounts.

It is not necessary to have a cycle counter for each valve, (unless, of course, they are being used as metering device for billing purposes), as they are small and can easily be moved from location to location. It is recommended that the spare parts list include cycle counters. (See Section F.4)

5. Division Valves and Cleanouts

a. Division Valves

Division valves are used on vacuum sewer mains much as they are on water mains. Plug valves and resilient seated gate valves have both been successfully used, although care must be exercised in the selection process to insure reliability (See Chapter F of this Section for a discussion on past operating problems with plug valves). Typical locations for division valves are at branch/main intersections, at both sides of a bridge crossing, both sides of areas of unstable soil, and at periodic intervals on long routes. The intervals vary with the judgement of the engineer, but typically range from 1,500 to 2,000 feet.

The valves should be capable of sustaining a vacuum of 24" Hg. Contract specifications should call for a certified test from an independent laboratory to very this.

The body, bonnet, closure element and trunions should be fabricated of cast iron equal to ASTM A126 Class B, with the closure element being covered with a precision molded Buna-N facing to act as the resilient seating surface. The mating surface should be ninety (90%) percent pure nickel polished to a fourteen (14) RMS finish.

Valves 4-inches and smaller may be direct actuated while all six-inch and larger valves should be provided with gear actuators.

The operating nuts should be of cast iron equal to ANSI A126 Class B. The connecting pin or key should be stainless steel. Aluminum nuts are not acceptable.

The valves should be installed in a valve box conforming to local codes, with the operating nut be extended to a position where it accessible with a standard valve wrench.

Recent designs have included a gauge tap, located on the downstream side of the division valve (Figure 26). Its purpose is to allow vacuum monitoring by one man in the field, rather than requiring two men (one to operate the valve in the field and one to read the vacuum gage at the vacuum station).

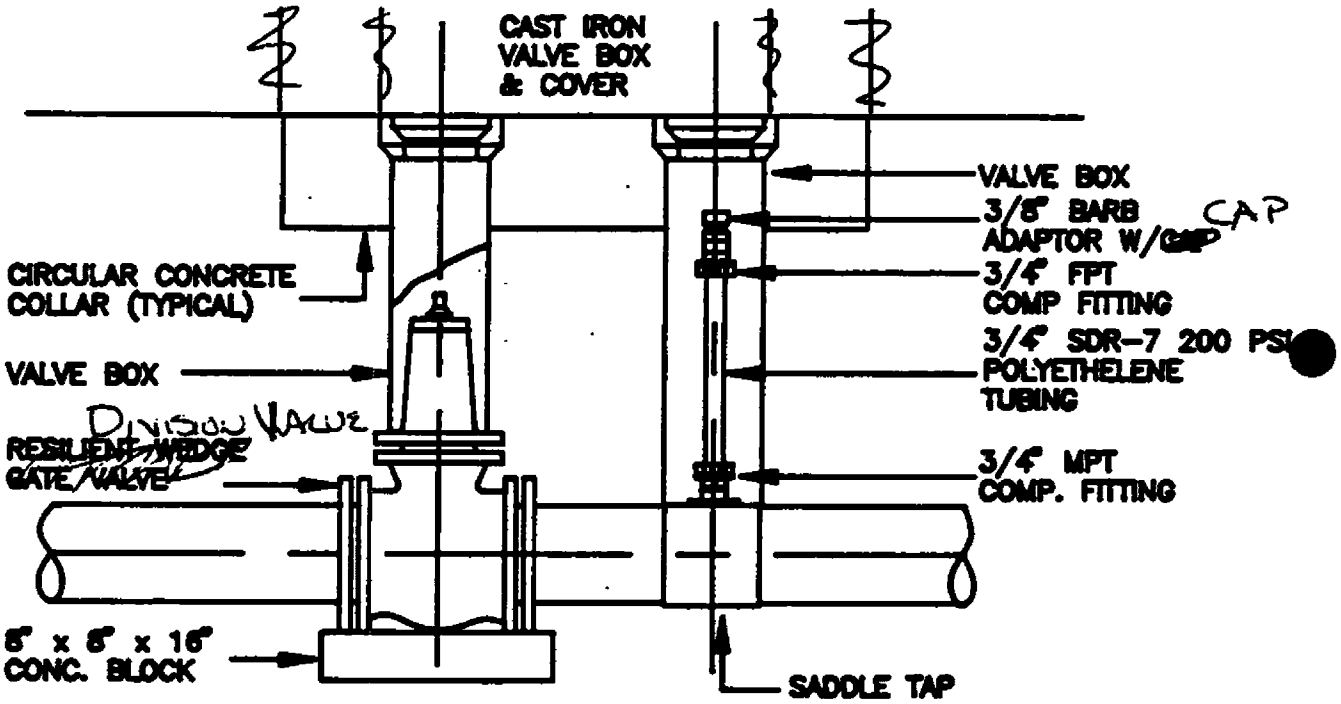

FIGURE 26
DIVISION VALVE
WITH GAUGE TAP DETAIL

h. Cleanouts

Cleanouts, called access points in vacuum sewer terminology, have been used in the past. Their use is no longer recommended, since access to the vacuum main can be gained at any valve pit. Some state codes may require access points to be installed. If so, they should be constructed as shown in Figure 27.

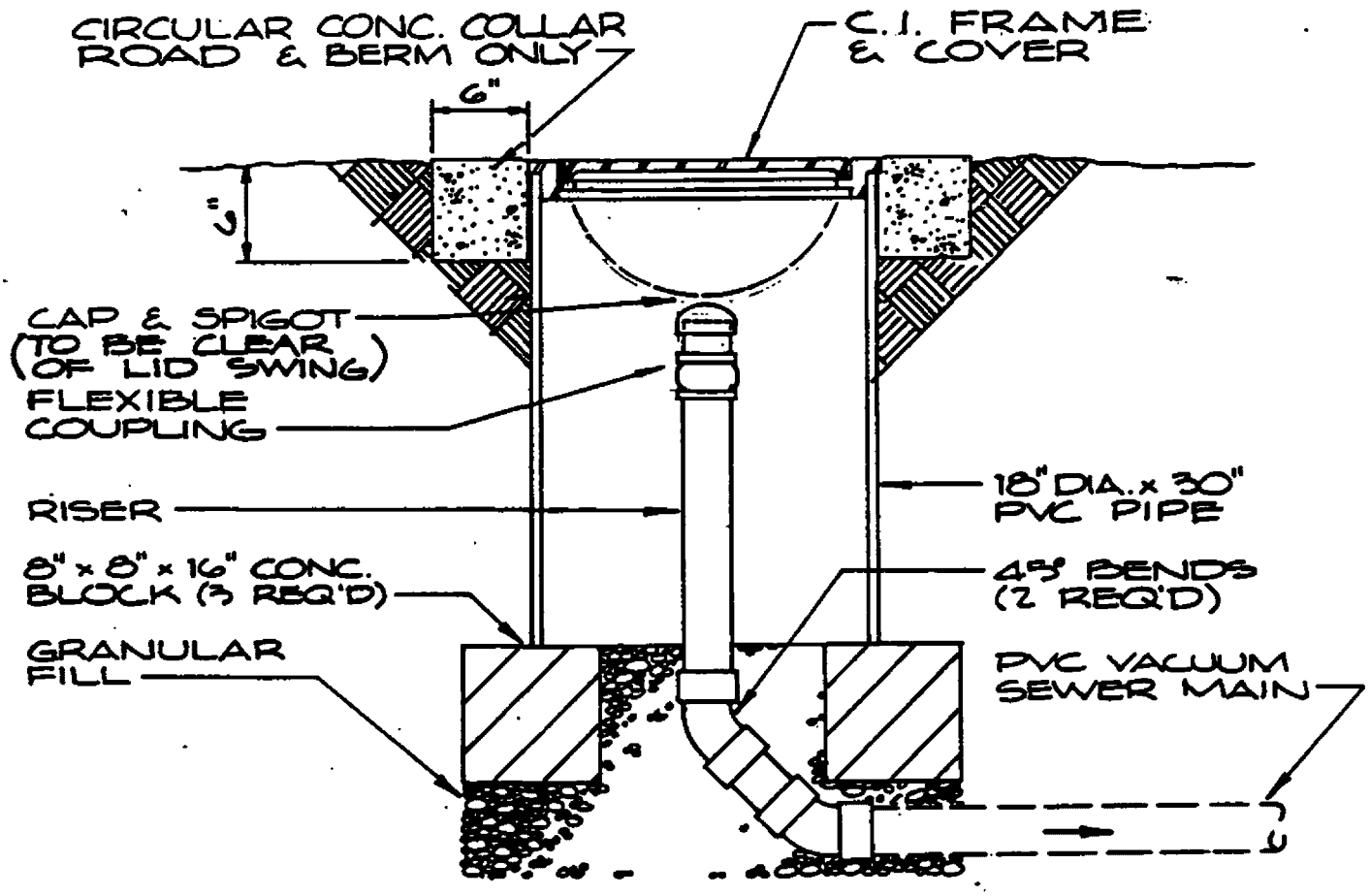

FIGURE 27
ACCESS POINT DETAIL

6. Odors and Corrosion

There are very few odor problems reported with vacuum sewers. There are three contributing factors responsible for this: 1) the system is sealed, 2) air is introduced in great volumes at each flow input and 3) detention times are short.

The entire system, from the valve pit setting to the vacuum station, is sealed. The valve pit sump containing the sewage typically is tested for tightness on two different occasions (at the factory and in the field after installation). The piping system contains no air releases. The collection tank at the vacuum station, into which all of the line sewers empty, is a vacuum tight vessel.

There is a great amount of air introduced into the system at each valve pit setting. The air to liquid ratio, by volume, typically is 2:1 or higher. This amount of air aids in the prevention of septic sewage.

The typical valve cycle volume is about 11 gallons. This small volume results in frequent valve cycles. Once in the main, the sewage travels at velocities in excess of 15 fps. These factors result in a short detention times, which also aids in the prevention of septic sewage.

There is one exceptions to the above discussion on odors: when concrete buffer tanks are used. Unlike the fiberglass settings, these tanks are open from the sump to the top of the pit. Operating personnel must be careful of sewer gas buildup in these tanks when performing maintenance, although the volume of sewage present in the tank usually is not large enough to produce dangerous levels of hydrogen sulfide. Also, these types of tanks typically are used to attenuate large flows, which allows the sewage more time to turn septic. This does not present a major problem, since the sealed PVC mains are unaffected by septic sewage.

All of the system parts are either PVC, ABS, FRP, rubber, or stainless steel, which are corrosion resistent. As such, corrosion has not been a problem in vacuum sewers.

The accumulation of grease is a cause for concern in convention lift stations as well as in some grinder pump systems. This grease builds up on level controls and on the side of the basins. Because the pumps typically pump down to a point about an inch above the pump suction, it is difficult to pump all of the grease from the sumps. As such, grease traps are typically required in applications such as restaurants to prevent pump plugging.

Grease does not present a problem in vacuum sewers. When the sewage is evacuated from the sump, the suction pulls floatable grease into the vacuum mains. Since the sewage moves through the mains in very high velocities, there is little opportunity for grease to build up anywhere in the system.

7. Vacuum Station

a. Component Sizing

In Table 10, nomenclature used in the station design is given.

TABLE 10
VACUUM STATION
DESIGN NOMENCLATURE

Term	Definition
Q max	Station peak flow (gpm)
Qa	Station average flow (gpm)
Q min	Station minimum flow (gpm)
Qdp	Discharge pump capacity (gpm)
Qvp	Vacuum pump capacity (cfm)
Vo	Collection tank operating volume (gal)
Vct	Collection tank volume (gal)
Vrt	Reservoir tank volume (gal)
t	System pump-down time (min)
Vp	Piping system volume (gal)
Vt	Total system volume (gal)
TDH	Total dynamic head (ft)
Hs	Static Head (ft)
Hf	Friction Head (ft)
Hv	Vacuum Head (ft)

VACUUM PUMP SIZING

To size the vacuum pumps, the following formula is used:

$$Qvp = A \times Wmax/7.5 \text{ gal}/ft^3$$

The "A" factors are shown in Table 11

TABLE 11
"A" FACTOR
FOR USE IN
VACUUM PUMP SIZING

Longest line length	A
0- 3,000 ft	5
3,001- 5,000 ft	6
5,001- 7,000 ft	7
7,001-10,000 ft	8
10,001-12,000 ft	9
Over 12,000 ft	11

The minimum recommended vacuum pump size is 150 cfm.

DISCHARGE PUMP SIZING

To size the discharge pumps, use the following formula:

$$Qdp = Qmax = Qa \times \text{Peak Factor}$$

(Typical peak factors range from 3.0 to 4.0)

The TDH is calculated using the following formula:

$$TDH = Hs + Hf + Hv$$

TDH is calculated using standard procedures for force mains. However, head attributed to overcoming the vacuum in the collection tank (Hv) must also be considered. This value is usually 23 feet, which is equivalent to 20" Hg (typical upper operating value). Since Hv will vary depending on the tank vacuum level (16-20" Hg, but possible to operate at much lower and higher levels during problem periods) it is prudent to avoid a pump with a flat capacity/head curve.

Where possible, horizontal sewage pumps should be used as they have less suction losses compared to vertical pumps. To reduce the risk of vortexing in the collection tank, the pump suction line should be 2" larger than the discharge line. Sewage pump shafts should be fitted with double mechanical shaft seals with the seal chamber pressurized with light oil.

Net positive suction head (NPSH) calculations are important in the discharge pump selection process. In Table 12, nomenclature used in the NPSH calculations is given.

TABLE 12
DISCHARGE PUMP
NPSH CALCULATION NOMENCLATURE

Term	Definition
NPSHa	Net positive suction head available (ft)
ha	Head available due to atmospheric pressure (ft)
havt	Head available due to atmospheric pressure at liquid level less vacuum in collection tank (ft)
V max	Maximum collection tank vacuum (ft)
hs	Depth of sewage above pump centerline (ft)
hvpa	Absolute vapor pressure of sewage at its pumping temperature (ft)
hf	Friction loss in suction pipes (ft)
NPSHr	Net positive suction head required by the pump selected (ft)
heq	Vacuum equalizing head provided by 1" equalizing lines (ft)

Typical values are shown in Table 13.

TABLE 13
TYPICAL VALUES
FOR NPSH CALCULATIONS

Term	Typical Value
ha:	
Sea level	33.9 ft
500 ft above sea level	33.2 ft
1000 ft above sea level	32.8 ft
4000 ft above sea level	29.4 ft
V max:	
16" Hg	18.1 ft
20" Hg	22.6 ft
hs	1.0 ft (min)
hvpa	0.8 ft
hf	2.0 ft (for vert. pump)
heq	3.0 ft (min)

To calculate NPSHa, use the following formulas:

$$NPSHa = havt + hs - hvpa + heq$$

$$havt = ha - V\ max$$

NPSHa must be greater than NPSHr

NPSHa and TDH should be calculated for both the high and low vacuum operating levels and compared to the NPSHr at the corresponding point on the head/capacity curve.

Figure 28 is a diagram for calculation of NPSHa in a vacuum system.

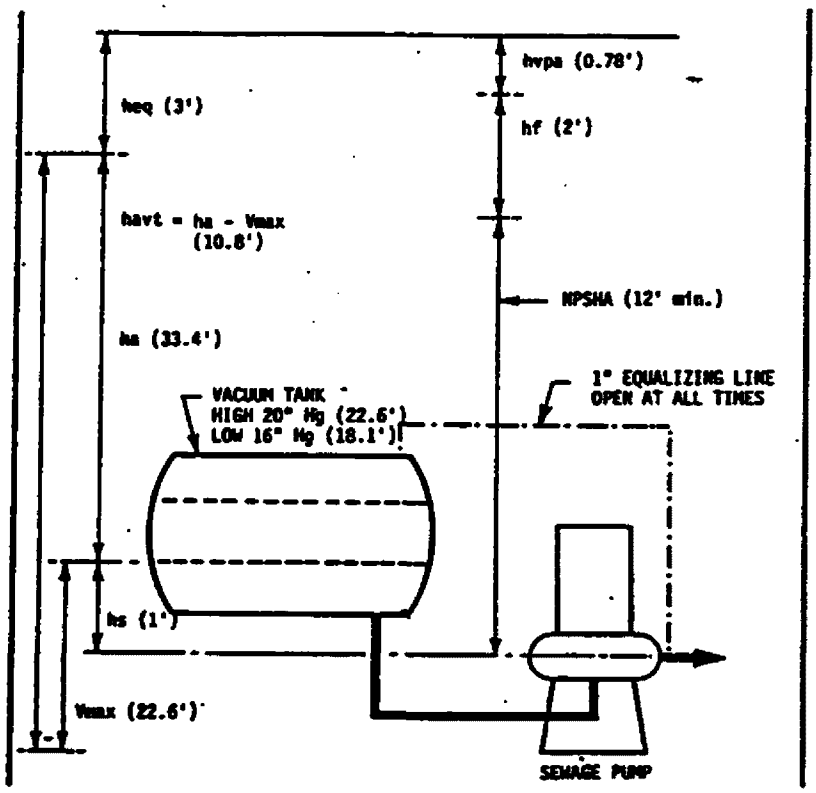

FIGURE 28
NPSHa CALCULATION DIAGRAM
WITH TYPICAL VALUES

REPRINTED COURTESY OF AIRVAC

COLLECTION TANK SIZING

The operating volume of the collection tank is the sewage accumulation required to restart the discharge pump. It usually is sized so that at minumum design flow the pump will operate once every 15 minutes. Thus is represented by the following formula:

$$Vo = 15 \times Qmin/Qdp \times (Qdp - Qmin)$$

where: $Qmin = Qa/2$

$Qdp = Q\ max = Qa \times \text{Peak Factor}$

Table 14 gives the value of Vo for a 15 minute cycle at Qmin for different peaking factors.

TABLE 14

VALUES OF Vo
FOR A 15 MINUTE CYCLE @ Qmin
FOR DIFFERENT PEAKING FACTORS

Peaking Factor	Vo
3.0	2.08 x Qmax
3.5	1.84 x Qmax
4.0	1.64 x Qmax

The total volume of the collection tank should be 3 times the operating volume with a minimum recommended size of 400 gallons ($Vt = 3 \times Vo$).

After sizing the operating volume, the designer should check to ensure an excessive number of pump starts per hour will not occur. This will happen when the sewage inflow to the tank is equal to half the pump capacity.

When designing the collection tank, the sewage pump suction lines should be placed at the lowest point on the tank and as far away as possible from the main line inlets. The main line inlet elbows inside the tank should be turned at an angle away from the pump suction openings.

RESERVOIR TANK SIZING

The recommended size of the reservoir tank for most applications is 400 gallons. In special cases, it may be larger.

SYSTEM PUMP-DOWN TIME

After the vacuum pump, collection tank, and reservoir tank are sized, system pump-down time for an operating range of 16" to 20" Hg should be checked. This calculation will show the amount of time it will take the selected vacuum pumps to evacuate (pump-down) the collection piping from 16" Hg to 20" Hg. This formula is shown below:

$$t = \frac{(0.045\ \frac{cfm\text{-}min}{gal})\ (2/3\ Vp + (Vct - Vo) + Vrt)\ gal}{Qvp\ cfm}$$

where: t = System pump-down time (min)
Vp = Volume of collection system piping (gal)
Vct = Volume of collection tank (gal)
Vo = Operating volume of collection tank (gal)
Vrt = Volume of reservoir tank (gal)
Qvp = Vacuum pump capacity (cfm)

In no case should "t" be greater than 3 minutes nor less than 1 minute. If greater than 3 minutes, the size of the capacity of the vacuum pumps should be increased until "t" is less than 3 minutes. If "t" is less than 1 minute, the size of the reservoir tank should be increased.

b. Typical Component Specifications

VACUUM PUMPS

Vacuum pumps may be either the sliding-vane or the liquid-ring type (See Chapter III.C.3 for a discussion on the differences between types). In either case, the pumps should be air-cooled and have an end (ultimate) vacuum of 29.3" Hg minimum at sea level. The pumps should be capable of continous operation. Duplicate pumps, each capable of delivering 100% of the required air flow (cfm), should be provided.

Lubrication should be provided by an integral, fully recirculating oil supply. The oil separation system should also be integral. The entire pump, motor, and exhaust should be factory assembled and tested unit mounted on vibration isolators and should not require special mounting or foundation considerations.

DISCHARGE PUMPS

Both vertical and horizontal discharge pumps are acceptable, although the latter is recommended due to lower suction losses than with vertical pumps. Duplicate pumps, each capable of delivering the design capacity (gpm) at the specified TDH (ft) should be used.

Each pump should be equipped with an enclosed, non-clog type, two port, grey iron impeller, statically and dynamically balanced, capable of passing a 3" sphere. The impeller should be keyed and fastened to a stress proof steel shaft by a stainless steel lockscrew or locknut. Pumps should have an inspection opening in the discharge casing.

The pumps should be fitted with double mechanical shaft seals. A pressurizer mounted on each pump and connected to the seal chamber is required to maintain a pressurized supply of light lubricating oil in the seal chamber.

Each pump should be coupled to its driving motor by a grey iron bracket with machined rabbet fits and a flexible coupling. Stainless steel shaft sleeves are to be supported by sealed ball bearings in a one piece grey iron frame. Each pump should be a base mounted unit with a cast iron base.

A certification from the pump manufacturer that the pumps are suitable for use in a vacuum sewerage installation is required.

Equalizing lines are to be installed on each pump. Their purposes is to remove air from the pump and equalize the vacuum acrossed the impeller. Clear PVC pipe is recommended for use as small air leaks and blockages will be clearly visible to the system operator. On small discharge pumps (generally less than 100 gpm), the equalizing lines should be fitted with motorized full port valves which close when the pumps are in operation.

VACUUM TANKS

Two vacuum tanks are required for each station: the collection tank and the reservoir tank. Basic construction of the tanks is similar, differing only in size, shape, and type and location of the openings. Both steel and fiberglass tanks are acceptable.

Steel tanks should be of a welded construction and fabricated from not less than 1/4" thick steel plates. The tanks should be designed for a working pressure of 20" Hg vacuum and tested to 28" Hg vacuum.

Each tank is to be furnished with the required number and size of openings, manways, and taps, as shown on the plans.

The tanks should be sand-blasted and painted at the manufacturer's location and painted as follows:

Internally: One coat of epoxy primer and two coats of coal tar epoxy.

Externally: One coat of epoxy primer and one coat of epoxy finish.

Each tank should be supplied complete with sight glass and its associated valves.

Fiberglass tanks may be substituted using the same specifications. Fiberglass tanks are to have 150 psi rated flanges.

STANDBY GENERATOR

The standby generator should be capable of providing 100% standby power for the station operation. It typically is located inside the station, although generators located outside the station in an enclosure are also acceptable.

STATION PIPING

This item includes piping, valves, fittings, pipe supports, fixtures, drains, and other work involved in providing a complete installation.

Station piping includes all piping within the station, connecting piping to the vacuum reservoir tank, collection tank, vacuum sewer lines, and force mains.

Wastewater, vacuum, and drain lines larger than 4" should be cast iron, ANSI B16.1, 125 psi for exposed installations. For buried installation, mechanical joint, ANSI A21.11, AWWA C111, cast iron should be used. Fittings should be flanged and mechanical joint as appropriate (ANSI A21.10, AWWA C110). One-eighth inch (1/8") thick red rubber gaskets should be used on all flanges. Vacuum lines as well as other lines under 4" should be Schedule 80 PVC. Building sanitary drains are to be PVC DWV pipe and fittings.

The piping should be adequately supported to prevent sagging and vibration. It also should be installed in a manner to permit expansion, venting and drainage.

For fiberglass tanks, all piping must be supported so that no weight is supported by the tank flanges. Flange bolts should only be tightened to the manufacturer's recommendations. Provisions must be allowed for inaccurate opening alignment.

All shut-off valves fitted within the collection station should be identical to those used in the collection system piping, with the exception that they be flanged.

Check valves fitted to the vacuum piping are to be of the 125 lb. bolted bonnet, rubber flapper, horizontal swing variety. Check valves are to be fitted with Buna-N soft seats.

Check valves fitted to the sewage discharge piping are to be supplied with an external lever and weight to ensure positive closing. They also should be fitted with soft rubber seats.

On the upstream side of each side of each vacuum sewer isolation valve, a vacuum gauge of not less than 4-1/2" diameter should be installed. Gauges should be positioned so that they are easily viewed when the isolation valves are operated. Diaphram seals should not be used with compound gauges. Snubbers are recommended for all compound and pressure gauges.

MOTOR CONTROL CENTER

The Motor Control Center (MCC) is to be manufactured, assembled, wired, and tested by the factory in accordance with the latest issue of NEMA Publication ISC2-322, for Industrial Controls and Systems. The vertical section and the individual units shall bear a UL label, where applicable, as evidence of compliance with UL Standard 845.

Wiring inside the MCC is to be NEMA Class II, Type B. Where Type B wiring is indicated, the terminal blocks should be located in each section of the MCC.

The enclosure should be NEMA Type 12-With-Gasketed Doors. Vertical sections shall be constructed with steel divider side sheet assemblies formed or otherwise fabricated to eliminate open framework between adjacent sections or full-length bolted-on side sheet assemblies at ends of the MCC.

The MCC should be assembled in such a manner that it is not necessary to have rear accessibility to remove any internal devices or components. All future spaces and wireways are to be covered by blank doors.

LEVEL CONTROLS

The discharge pumps and alarms are controlled by seven (7) probes inside the collection tank. These probes are 1/4" stainless steel with a PVC coating. The seven positions are as follows:

1. Ground probe
2. Both discharge pumps stop
3. Lead discharge pump start
4. Lag discharge pump start
5. High level alarm
6. Reset for probe #7
7. High level cut-off: stops all discharge pumps (auto position only) and vacuum pumps (auto and manual positions)

Figure 29 gives approximate elevations of these probes in the collection tank relative to the discharge pumps and incoming vacuum mains.

An acceptable alternative to the seven probes is a single capacitance-inductive type probe capable of monitoring all seven set points. This type of probe requires a transmitter/transducer to send a 4-20 mA signal to the MCC.

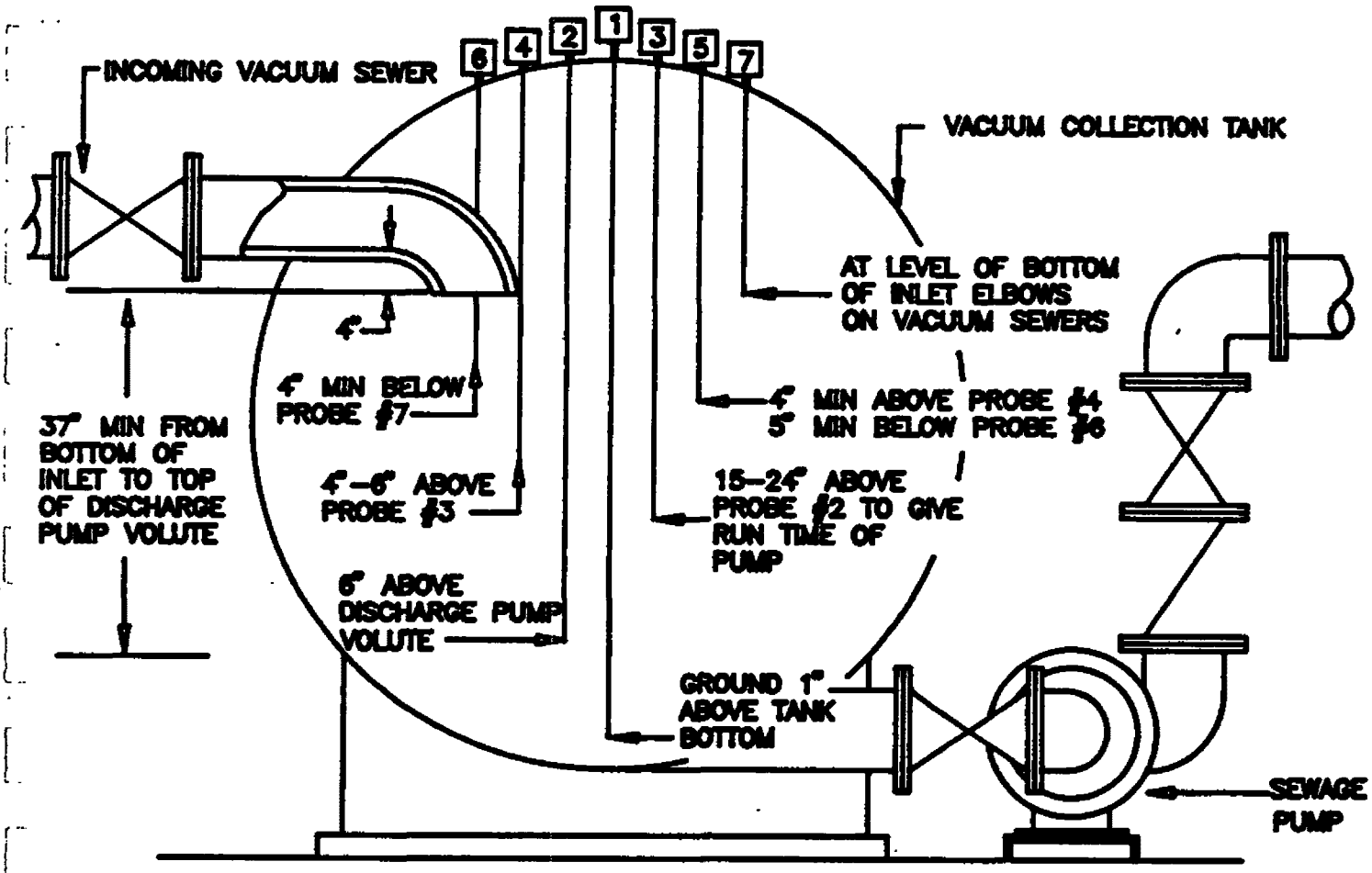

REPRINTED COURTESY OF AIRVAC

FIGURE 29
TYPICAL ELEVATIONS
OF LEVEL CONTROL PROBES

TELEPHONE DIALER

A voice communication-type automatic telephone dialing alarm system should be mounted on a wall adjacent to the MCC. The system should be self-contained and capable of automatically monitoring up to four independent alarm conditions.

The monitoring system shall, upon the opening of any one alarm point, access the telephone lines, wait for the dial tone, and begin to dial the first of four field programmed telephone numbers. The system will then deliver a voice message indicating a two digit station number and the fault status at that station. The message will be repeated a preset amount of times with sufficient space between messages to allow the called individual to acknowledge receipt of the call. Acknowledgement of the message is accomplished by pressing a TOUCH TONE* key on the telephone between messages. Following the acknowledgement, the system will vocalize a sign-off and hang up. The system then enters a 30 minute delay to allow adequate time for follow-up measures to be taken.

If, during the delay, another fault occurs, the system will begin recalling. Additionally, the system can be called at any time, from a standard telephone, whereupon it will answer the call and deliver a vocalized message indicating the station number and fault status at the location.

If the delay elapses and faults still exist, the system will begin dialing in 1 minute intevals attempting to deliver the fault message. If no acknowledgement is received, the system will hang up, wait 60 seconds, and call the next priority number. After dialing the last priority number, the system will, if necessary, return to the first priority number and repeat the sequence indefinitely.

If the monitoring sysem is to be housed in the MCC, provisions must be made to isolate the system from interference.

The monitoring system should be provided with continously float charged batteries for 24 hours standby operation in the event of a power outage.

VACUUM GAUGES

All vacuum gauges should be specified to have stainless steel bourdon tube and socket and to be provided with 1/2" bottom outlets. Polypropylene or stainless steel ball valves should be used as gauge cocks.

Vacuum gauges should be provided at the following locations:

* On the side of the vacuum reservoir tank in a position that is easily viewed from the entrance door.
* On the collection tank in a position that is easily viewed from the stairway leading to the basement.
* On each incoming main line to the collection tank, immediately upstream of the isolation valve on the line. These gauges should be in a position above the incoming main lines that is easily viewed from the operating position of the isolation valves.

The connection from the incoming main lines to the vacuum gauges should be made of PVC or CPVC pipe. Copper pipe is not to be used for this purpose.

VACUUM RECORDER

The MCC should contain a 7-day circular chart recorder with a minimum chart diameter of 12 inches. The recording range is to be 0-30" Hg vacuum, with the 0 position at the center of the chart. The chart recorder is to have stainless steel bellows.

SUMP VALVE

The basement of the vacuum station should be provided with a 15" x 15" x 12" deep sump to collect washdown water. This sump will be emptied by a vacuum valve that is connected by piping to the collection tank. A check valve and eccentric plug valve should be fitted between the sump valve and the collection tank.

III. VACUUM SEWER SYSTEMS

E. CONSTRUCTION CONSIDERATIONS

SECTION E

CONSTRUCTION CONSIDERATIONS

Construction of a vacuum sewer system is similar to conventional systems. Utilizing small diameter pipes in shallow trenches and having the ability to avoid underground obstacles virtually at will makes this type of construction attractive to contractors. There are, however, certain inherent construction problems associated with vacuum sewers.

It is imperative that inspection be performed by those with a thorough knowledge of vacuum sewer technology.. The design of the system and its hydraulic limits must be understood.

1. Line Changes

Unforeseen, underground obstacles are a reality in sewer line construction. Water and gas lines, storm sewers, and culverts at unanticipated locations all may present difficulties during construction. Natural underground conditions, such as rock, water, or sand also may present more problems than anticipated. With the "straight line, constant grade" nature of gravity sewer construction, these obstacles usually result in field changes.

These field changes may include installing an additional manhole. It may also entail removing and relaying part of the pipe at a different grade. Depending on the specifics, the line change may also result in a grade change which could affect the depth and grade of the entire gravity sewer system. Another lift station may have

to be installed. Alterations at the treatment plant may be required. Unfortunately, this scenerio is all too common. The end result is an increase in contract price through a change order.

One key advantage of vacuum sewers is the flexibility they allow for line changes during construction. Unforeseen, underground obstacles usually can be avoided simply by going under, over or around them. There may be cases where line changes will be necessary, due to hydraulic limitations. However, the likelihood of this is greatly reduced with the flexibility vacuum sewers allow.

One must be very careful not to make change for the sole sake of making construction easier. Every line change should be carefully evaluated for its effect on the performance of the overall system. Will the change increase the amount of lift in the system (and ultimately result in increased power costs)? Will the change result in an undesirable hydraulic condition at a key location in the system? How will the owner be affected? Will the change put the pipeline in a location that the owner's equipment cannot reach? Will it result in operational problems in the future? All of these concerns must be weighed against the potential construction cost savings prior to a change being authorized.

Line changes are made through the use of fittings. No 90-degree bends should be used in vertical or horizontal line changes. Concrete thrust blocking generally is not necessary, however, compaction in this zone is vital.

2. Grade Control

Like line changes, grade changes should not be made without a thorough evaluation of how that change will affect overall system performance. The ability to make grade changes to avoid unforeseen, underground obstacles is a huge advantage; however, the abuse of this freedom can result in major problems. This very issue has been the cause of conflicts between the contractor and the engineer in past projects. The engineer's inspector instinctively desires to eliminate lifts to improve the system hydraulics. This results in a deeper installation. The contractor, on the other hand, is constantly wanting to add lifts to result in a shallower installation. As long as neither party loses sight of the system's hydraulic limits and the effect on operational costs, a conflict does not have to take place.

Vacuum sewers must be laid with a slope toward the vacuum station. The only exception to this is where vertical profile changes (lifts) are made. The pipe must slope toward the vacuum station between lifts.

A minimum of 0.2% slope must be maintained at all times. To ensure this, a laser typically is required. The use of automatic levels also is acceptable when an experienced instrument man is on site. In areas where an obvious downhill slope exists, the pipeline follows the contour of the ground. Grade should routinely be checked by the engineer's inspector.

3. Service Connections

Most contractors have a crew installing main lines and a second crew installing the services (vacuum valve pit). It is common for the line crew to install a wye fitting on the main to accept later piping from the pit crew. Typically, the pit crew installs the pit and then must connect the pit to the main. Connecting these two fixed points, which have different elevations, with rigid piping sometimes can be difficult. Many times the result is the excessive use of fittings. This situation can be avoided by proper planning and coordination between crews.

Each service setting, in terms of depth, typically is custom designed. The relationship between the ground elevation where the pit will be situated and the elevation of the customers basement/building sewer dictates the depth of service required. In addition, the length of connecting lateral required must be considered to allow for sufficient slope on the building sewer. Prefabricated valve pits with fixed dimensions can sometimes make pit location critical. Moving the pit to a lower elevation, while allowing additional fall for the building sewer, may result in lift being necessary to connect to the main (elevation of main is generally independent of elevation of the pit). Moving the pit to a higher elevation may result in insufficient fall available for the building sewer. Each valve pit location should be evaluated for adequacy and verified to the contractor prior shipment of the valve pits.

4. Equipment Substitutions

Equipment submittals should be approved by the engineer prior to the contractor ordering the specific equipment. Virtually all of the components in a vacuum system are available from more than one manufacturer. Even though much research and development currently is taking place, the vacuum sewer industry has grown and improved largely by the trial and error method. For this reason, substitutions of specified equipment are discouraged. This is not to say that new or alternative brands should automatically be ignored; it simply means that care and judgement should be exercised prior to any major deviation.

Should a substitution be desired, the contractor should submit the following information to the engineer to allow for a complete evaluation of the situation:

* Identify the product by stating the manufacturer's name and address, trade name of product, and the catalog or model number.
* Include product data such as shop drawings, samples, etc.
* Give itemized comparison of substitution with specified equipment, listing variations.
* Give quality and performance comparison of substitution with specified equipment.
* Give cost data comparing substitution with specified equipment.
* List availability of maintenance services as well as replacement parts.
* Show the effect of substitution on the project schedule.
* Show the effect of substitution on other related equipment.

5. Testing

a. General

The engineer should be present during the entire testing period. This holds true for both the vacuum station test and the collection system test. Any leak not discovered due to flawed testing procedures, either intentional or unintentional, will quickly become evident once the system is operational. An operator can simply check the vacuum charts daily to see if any leaks are present.

During testing, temperature and/or climatic conditions may vary. The following conditions may affect the vacuum readings in the pipe being tested:

* A drop in temperature may occur. The effect will be cooling of the pipe and the air in it thus causing contraction of both. The contracting of the air within the pipe will cause an increase in vacuum (Figure 30).

* Climatic conditions may cause a change in the barometric pressure. Before a rainfall the barometric pressure may drop by approximately one-half inch of mercury. A vacuum gauge measures the difference in pressure between the volume being tested and the atmospheric pressure. Therefore, any change in barometric pressure will cause an equivalent change in pressure on the gauge being used in the vacuum test.

Where climatic changes may occur during a vacuum test, it is recommended that pipe temperature and atmospheric pressure be recorded at the beginning and end of the test.

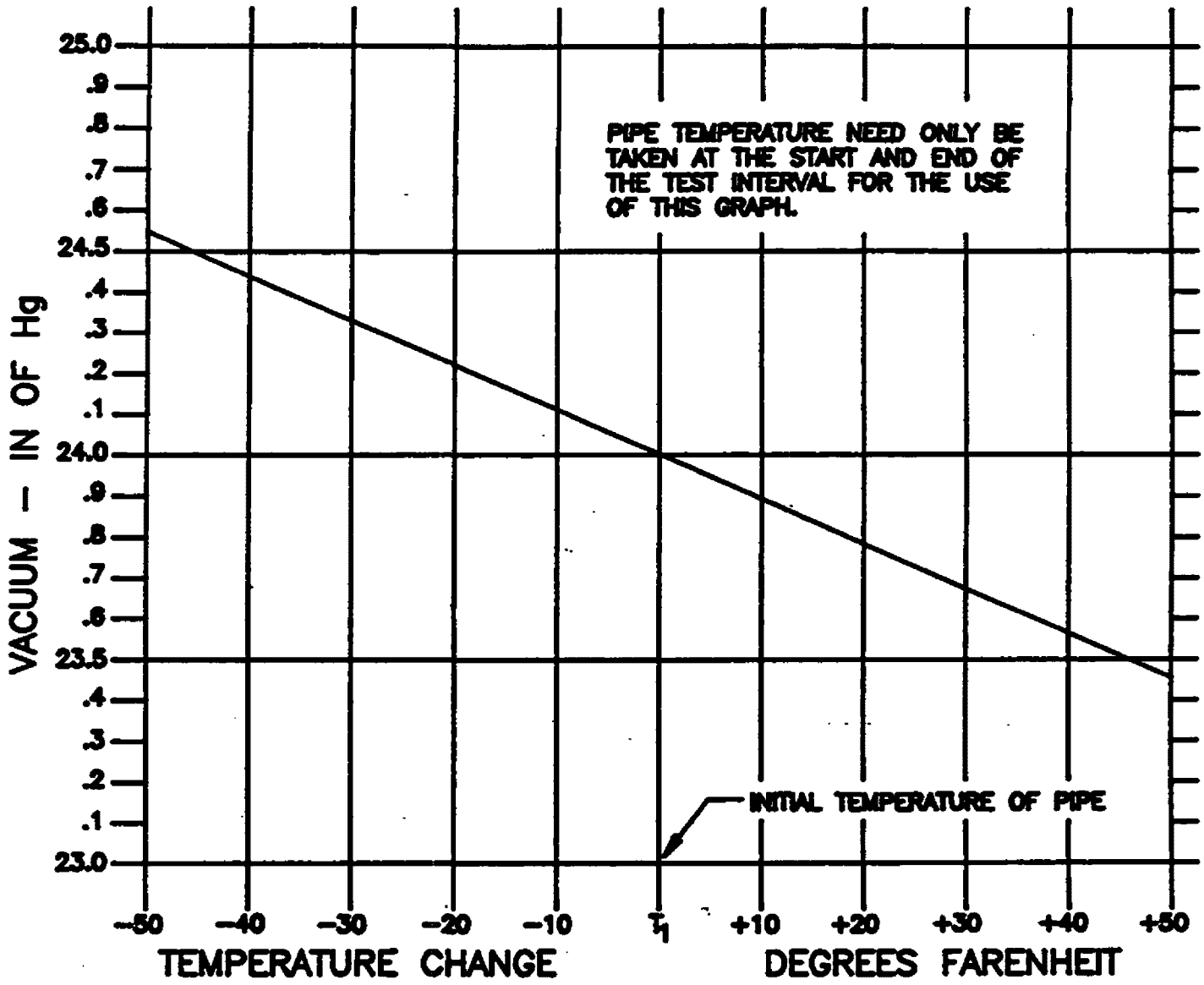

FIGURE 30
EFFECT OF TEMPERATURE
CHANGE ON VACUUM TESTING

To correct the test results, first use Figure 30 to determine the effect of any change in temperature (T effect). Then apply the following formula:

T effect-(AP1-AP2)-V2 = actual loss in line vacuum

EXAMPLE

	START	END	CHANGE
Temperature of pipe (F)	95	65	30
Atmospheric Pressure (In. Hg)	AP1=30.0	AP2=29.5	0.5
Line Vacuum (In. Hg)	V1=24.0	V2=23.4	

T effect from Figure 30 for a 30 F drop in temperature is 24.3-in. Hg.

Vacuum Loss = T effect - (AP1 - AP2)-V2

= 24.3 - (30.0-29.5)-23.4

= 24.3 - 0.5 - 23.4

= 0.4 in. Hg

b. Vacuum Station

All vacuum piping, and connected appurtenances, in the vacuum station should be tested for tightness. A final test of the station piping should be done. In this test, the station piping is subjected to 24-inches of Hg. There should be no loss of vacuum in the 4-hour test period.

All of the controls should be tested at startup to see that the system is functioning as designed. This includes the vacuum pump controls, the sewage pump controls, and the telephone dialer.

c. Collection Piping

Testing of the collection system is usually carried out daily prior to backfilling by plugging all connections and subjecting the system to 24-inches of Hg vacuum. This daily testing usually is not a strict requirement, rather it is recommended as a means of quality control to the contractor.

The collection system also is subjected to a final acceptance test. The engineer should check to see that all division valves are opened prior to and at the end of the test. The system should be subjected to 24-inches of Hg vacuum. A drop in vacuum of 1% per hour over 4 hours is acceptable. Line sections that were successfully tested on an individual basis during the daily testing, may fail the final test when considered collectively.

6. Past Construction Problems

The above sections provided insight into some of the inherent problems associated with vacuum sewer construction. These problems can be avoided by sound design, proper inspection, and preconstruction planning/coordination between the engineer and the contractor.

Based on a 1989 study of six (6) systems, three problems appear to be prevalent during construction. They are discussed below:

Solvent Welding in Cold Weather

Solvent welding PVC pipe in temperatures approaching or exceeding freezing led to vacuum leaks. Some contractors made the mistake of keeping the glue warm, only to apply it to a pipe that was much colder. This led to leaking joints and difficulty in passing the final leakage test.

Valve Pit Settlement

Poor workmanship by the contractor led to valve pit settlement. This resulted in alignment problems for the owner at the time of the valve installation (vacuum line entering the pit moved from its level position).

Excessive Use of Fittings

Two fixed points, at varying inverts and varying locations, but requiring rigid connection piping, resulted in the excessive use of fittings. These fittings many times were located within the pit excavation. This overexcavated zone was one where lack of compaction could easily lead to settlement. Later settlement, in fact, led to fitting failures.

The first problem can be avoided by not solvent welding joints during temperatures of 40 F and colder. However, since this may not practical for some contractors, a better solution would be to minimize the number of solvent welded joints in the system. Along these lines, there has been a significant move in the vacuum industry toward gasketed pipe and fittings.

Valve pit settlement problems can be avoided by better quality control on both the contractor's and inspector's part during construction. Taking time to assure proper alignment and proper compaction around the pit will greatly reduce the likelihood of this problem occurring. Design improvements, specifically the tapered pit, have allowed contractors to improve their compaction effort.

The use of fittings in the service lines can be minimized by proper planning and coordination between line and pit crews. To minimize the difficulties, some contractors install the valve pits first. The use of gasketed fittings, which adds a certain degree of flexibility, will also alleviate some of these problems.

III. VACUUM SEWER SYSTEMS

F. OPERATION AND MAINTENANCE CONSIDERATIONS

SECTION F

OPERATION AND MAINTENANCE CONSIDERATIONS

1. Operation & Maintenance Manual

To operate a vacuum sewer system requires proper training. Operation and Maintenance Manuals (O&M Manuals) are a vital part of this training process. Problems arose in some of the early vacuum systems due to the lack of such aids. Manufacturers and engineers are now recognizing this fact and are reacting accordingly with improved technical assistance and O&M Manuals.

A well written O&M Manual should contain the information necessary to achieve the following goals:

* To provide an accessible reference for the wastewater collection system operators in developing standard operating and maintenance procedures and schedules.

* To provide a readily available source of data, including permits, design data, and equipment shop drawings which are pertinent to the particular system.

* To provide the system operators assistance and guidance in analyzing and predicting the system efficiency.

* To provide the system operators assistance and guidance in troubleshooting the system.

While an O&M Manual is a valuable tool, it should not be viewed as the source of the ultimate solution to every problem. The degree of efficiency of the system depends on the initiative, ingenuity, and sense of responsibility of the system operator. Also, the manual should be constantly updated to reflect actual operational experience, equipment data, problems, and implemented solutions.

The O&M Manual should contain the following information as a minimum:

DESIGN DATA

All design data should be given. Included would be information relating to the system make-up, such as the number of valves, line footage and line sizes. Also included would be component sizing information, anticipated operating ranges, and other important design considerations. As-built drawings showing all system components should be included.

EQUIPMENT MANUALS

Installation and maintenance manuals from the manufacturers of the major equipment should be included. A list showing the manufacturer and supplier as well as contact persons, addresses, and phone numbers should be compiled.

WARRANTY INFORMATION

All warranties, including effective dates, should be listed.

SHOP DRAWINGS

A list of all approval drawings should be made which identifies the manufacturer, model number, and a general description of the equipment. A copy of each approval drawing should be included with the O&M Manual.

PERMITS AND STANDARDS

All applicable permits, such as the National Pollution Discharge Elimination System (NPDES) permit, should be included in the manual. Water Quality standards should also be included.

OPERATION AND CONTROL INFORMATION

This section should include a description of the overall system. The major components should be identified. The following information should be given for each major component:

* Relationship to adjacent units
* Operation
* Controls
* Problems and troubleshooting guides
* Maintenance
* Preventative maintenance schedule
* Equipment data sheet

PERSONNEL INFORMATION

A description of the manpower requirements, including qualifications and responsibilities should be listed.

RECORDS

A list of the type of records, as well as a list of reference materials that are important, should be included.

PREVENTIVE MAINTENANCE

All equipment should be listed and cross-referenced to equipment catalogs. Maintenance schedules should be established.

EMERGENCY OPERATING AND RESPONSE PROGRAM

This section should include a description of actions and responses to be followed during emergency situations. Included should be a list of contact persons, including addresses and phone numbers, for those responsible for various community services

SAFETY INFORMATION

A safety plan should be developed which includes practices, precautions, and reference materials.

UTILITY LISTING

A list of all utilities in the system area should be given, including contact persons, addresses, and phone numbers.

2. Staffing Requirements

a. General Information

Information gathered from operating systems suggests that the effort to operate and maintain vacuum systems has been overstated in past publications. The generalization of vacuum systems as being mechanized, and therefore, O&M intensive, along with the conservative nature some engineers in recommending staffing requirements, many times resulted in an over-staffing situation.

b. Operator Responsibilities

The system operator is responsible for the following activities:

* Analyzes and evaluates operation and maintenance functions and initiates new procedures to insure continued system efficiency.

* Reviews and coordinates all data and records for the preparation of reports and purchase requests.

* Recommends all major equipment purchases and system improvements.

* Maintains effective communication with other employees, municipal and government officials, and the general public.

* Has a working knowledge of all phases of wastewater collection systems and has a mechanical background.

* Supervises daily operation and maintenance of the system.

* Inspects the system daily to determine the efficiency of operation, cleanliness, and maintenance requirements.

* Prepares work schedules.

* Prepares operational reports and maintenance reports.

* Determines remedial action necessary during emergencies.

* Maintains communication with higher management.

3. Operator Training

It is desirable for the operating entity to hire the system operator while the system is under construction. This allows the operator to become familiar with the system, including the locations of all lines, valve pits, division valves, and other key components.

To add further training, AIRVAC offers a two-week training program at their facility in Indiana. A general knowledge of vacuum sewers is obtained by viewing the testing setup at this facility. This setup includes clear PVC pipe with various lift arrangements where one can watch the flow inside the pipe during a wide variety of vacuum conditions. Faults are simulated so that that the trainee can gain troubleshooting experience. The operator is taught the valve operation and its overhaul. Finally, vacuum station maintenance is taught.

The best training is gained by actual operating experience. Many times, however, the knowledge gained is done so at the expense of costly mistakes. This is especially true at startup time. During this time the engineer, who provided day to day inspection services during construction, is gradually spending less time on the system. The operator is busy setting vacuum valves and inspecting customer hookups. Complicating the situation is the fact that the operating characteristics of the system

continually change until all of the customers are connected and all of the valves finetuned. However, with the operator being preoccupied with other tasks, this finetuning sometimes is not done; problems develop; and system credibility is lost. This "training gap", is present at the startup of virtually every vacuum system. This is an area of the technology that needs improvement. One solution is for the engineer to budget a 3 to 6 month on-site training service to aid the system operator in the finetuning and troubleshooting of the early problems. The operator will benefit from the engineer's systematic approach to problem solving. This most likely will instill a certain degree of confidence in the operator concerning the system. Operator attitude is vital to the efficient operation of a vacuum system.

4. Spare Parts Inventory

For optimum operating efficiency, it is necessary that a sufficient inventory of spare parts be kept. Some of the spare parts, such as fittings and pipe, can be purchased through local builder's supply companies. However, there are parts that are unique to vacuum systems that can not be purchased locally. Typically, these spare parts are included as part of the construction contract. Following is a recommended list of spare parts that should be supplied to the owner during the construction phase.

TABLE 15
SPARE PARTS LIST
PER EVERY 50 VALVES

2 ea.	Vacuum valves
4 ea.	Controllers/sensors
2 ea.	Sensor/cleanout tubes
2 ea.	Controller/sensor rebuilding kit
5 ea.	Valve cycle counters
4 ea.	Three-inch "no hub" couplings
2 ea.	Valve pits
2 ea.	Valve pit bottom plates
1 ea.	Standard collection sump
1 ea.	Deep collection sump
2 ea.	Valve pit covers
5 ft.	Clear valve tubing: 3/8-inch
10 ft.	Breather tubing: 5/8- inch

In addition to these spare parts, there are certain specialty maintenance tools and equipment that are needed.

TABLE 16
SPECIALTY TOOLS AND EQUIPMENT
FOR COLLECTION SYSTEMS

1 ea.	Portable vacuum pump
2 ea.	Portable vacuum chart recorders
100 ea.	Vacuum charts
3 ea.	Chart pens
2 ea.	0-20" W.G. magnehelic gauges
2 ea.	0-50" W.G. magnehelic gauges
1 ea.	12 VOLT DC submersible pump
15 ft.	Pump discharge hose
2 ea.	No-hub torque wrenches
2 ea.	Vacuum gauges
1 ea.	Flexible mercury manometer
1 ea.	Controller test box
1 ea	Pipe locator

The vacuum station also requires spare parts. These range from spare pump seals to fuses. Specialty items that should be considered are:

TABLE 17
SPECIALTY EQUIPMENT
FOR VACUUM STATION

1 ea.	Inductance probe
1 ea.	Probe transmitter
1 ea.	Probe microprocessor card
2 ea.	Vacuum switch
2 ea.	Vacuum gauge
1 ea.	Auto dialer microprocessor card

when infiltration and inflow was not occuring, with the same conclusion. It is safe to assume the same correlation exists with vacuum sewer systems.

At this time, thousands of flow measurements have been made on pressure sewer systems with a wide demographic spread. The result of these measurements has corroborated findings of the earlier studies; that flows typically range from 40 to 60 gpcd, with little weekly or seasonal variation.

The availability and quality of water affects water use and consequently sewer flows, as does water pressure, community affluence, nature of occupancy, and attitudes of users regarding water conservation. Because of these variables and to provide a safety factor, the flow rate normally assumed for design is 50 to 70 gpcd.

While vacuum sewers are sometimes thought to be free of infiltration and inflow, I&I can occur in the non-vacuum portions of the system, e.g., the building sewer. In some cases I&I has been extreme, due to leaking building sewers or house roof drains being connected to the building sewer. It is prudent to make an allowance for I&I when adopting a design flow, based on the extent of I&I control given to the project.

As for daily variations in flows, periods of peak moment flow which may exceed design values may occur 2 or 3 times per day. However, these are of little importance due to their short time of duration. There are also periods of zero flow.

Besides average daily flow rates and their variabilities, it is important to consider other factors, such as the rate of flow from the individual home to the vacuum valve pit. This flow rate can be quite high at times.

The American Society of Civil Engineers (ASCE) reported peak flows that may occur about twice per year as being 26 gallons in a 4 minute period, or 108 gallons in one hour. They go on to describe the simultaneous discharge from a bathtub and clothes washer resulting in a 46 gallon discharge over a two minute period, and having a high probability of occurance.

Bennett reported surge flows of 60 gallons in a 7 minute period. Jones reported findings similar to those of ASCE and Bennett and applied the data to regression analyses. The results of the various studies are shown in the Pressure Sewer section of this manual (Figure ---, page ---).

AIRVAC 3" valves have a maximum capacity of 30 gpm when connected to a 6" or larger main. This assumes that the vacuum necessary (5 in. Hg) to operate the valve is present at that particular locale. To acheive this capacity, with the normal 11 gallon valve

5. As-Built Drawings and Mapping

It is common in the industry for changes to be made during construction. The changes should be reflected on the as-built drawings. As the name implies, these drawings depict exactly how the system was built. This is a vital tool to the operating entity for maintenance, troubleshooting, and future improvements or extensions to the system.

An index map showing the entire system should be included in the as-built drawings. Shown on this map will be all key components, line sizes, line identifications, valve pit numbering and locations, and division valve locations. Detailed plan sheets of each line of the collection system should be included, with dimensions necessary to allow the operator to locate the line as well as all related appurtenances.

Unique to a vacuum system is the need for an as-built hydraulic map. This is similar to an index map but also includes special hydraulic information:

* the locations of every lift
* the amount of vacuum loss at key locations, such as the end of a line or the intersection of a main and branch line.
* number of main branches, number of valves in each branch, and total footage (or volume) of pipe in each branch.

This simple, but vital information allows the operator to make intelligent decisions when finetuning or troubleshooting the system.

Another tool that is helpful to the operator is an as-built drawing of each valve pit setting. This drawing will show the location of the setting relative to some permanent markers (house, power pole, etc.), the orientation of the gravity stub-outs, the depth of the stub-outs, and any other pertinent site specific information. These records are used by the operator as new customers connect to the system.

The vacuum station drawings should be altered to reflect changes made during construction. Especially important in these drawings are dimensions, since any future modification will depend on available space.

6. Maintenance

a. Normal Maintenance

A properly designed vacuum station will be equipped with a fault monitoring system, such as a telephone dialer. This system monitors the operation of both the vacuum station and the collection system. The operator is notified of low vacuum, high levels of sewage in the collection tank, and power outages.

Normal operation includes visiting each vacuum station daily. Some maintenance procedures include the daily recording of pump running hours and a checking of all oil levels. Once an operator is familiar with the operating characteristics of his system, a simple visual check of the gauges and the charts in the station will alert him of any problems. This visual check along with recording operating data generally takes about 30 minutes. Weekly procedures include checking battery terminals and battery conditions of the standby generator, cleaning of the collection tank sight glass, a check of the mechanical seal pressurizers of sewage discharge pumps, and a test of the telephone alarm system.

On a normal day, the operator will not be required to visit the collection system. Normal station gauge and chart readings are an indication that the collection system is fine. Depending on a system's history of breakdown maintenance, some periodic inspection may be required. This would include the inspection and manual operation of each valve on some regular interval. The breather lines should be inspected for the accumulation of moisture. An experienced operator will quickly learn the sounds of a properly functioning valve.

6. Preventive Maintenance

Wastewater collection systems operate and must be maintained 365 days a year. Variations in flow and maintenance workloads occur, making it imperative that preventive maintenance be planned and scheduled. This will ensure that there is no idle time during non-peak workload periods. Inspection and maintenance planning and scheduling involves time, personnel, equipment, costs, work orders, and priorities.

A preventive maintenance schedule for all major equipment should be developed. To initiate the preventive maintenance tasks, a work order system must be established. This system identifies the required work, priority of task, and any special information, such as the tools or parts required for the job. These work orders provide a record of work completed.

Scheduled maintenance on the collection piping should be minimal. Areas where difficult or unusual conditions were encountered during construction should be visited periodically. Other areas to be visited include steep slopes and potential slip areas.

At least once a year, the division valves should be checked. This is done by moving the valve through the entire opening and closing cycle at least once. This procedure will keep valves in operating condition. In addition, it will familiarize the operating personnel with the location of all valves.

All vacuum valves should be inspected once a year. They should be manually cycled to see that they are operating properly. The controller timing cycle should be recorded and compared to the original setting. If necessary, the timing should be reset. This entire procedure can be done by one man, requiring about 10-15 minutes per valve.

Every five or six years, the vacuum valves should be removed, a spare put in its place, and the old valve returned to the workshop. The valve should be taken apart and inspected for wear. If needed, the seat should be replaced. When the valve is reassembled, a new shaft seal and bearing should be fitted. The seals and diaphragms of the controller/sensor should be checked and replaced if necessary. This procedure can be done by one man, requiring 20-30 minutes per valve.

Preventive maintenance for the major equipment at the vacuum station should be done in accordance with manufacturers' recommendations. Yearly maintenance might include inspection of check valves, plug valves, vacuum pumps, sewage pumps, generator, and the telephone dialer.

c. Emergency Maintenance

Although very little effort is required on a day to day basis, there will be times that emergency maintenance is necessary. This effort usually requires more than one person, particularly when it involves searching for a malfunctioning valve. Many times problems develop after normal working hours, requiring men to be called out on an overtime basis. Emergency or breakdown maintenance can occur in the piping system, at the vacuum station, or at the vacuum valve.

Assuming proper design and construction, there is very little that can go wrong in the piping system. Occasionally, a line break will occur, due to excavation for other utilities or landslides, causing a loss of system vacuum. Using the division valves, the operator can easily isolate the defective section.

Malfunctions at the vacuum station are generally caused by pump, motor, or electrical control breakdowns. Duplicity of most components allows for the continued operation of the system when this occurs.

Most emergency maintenance is related to malfunctioning vacuum valves, caused by either low system vacuum or extraneous water. Failure of the valve is possible in either the closed or open position. A valve failing in the closed position will give the same symptoms as a blocked gravity line, that is, the customer will experience problems with toilet flushing. A phone call from the affected party makes identification of this problem academic. Fortunately, this rarely happens. Virtually all valve failures occur in the open position. When this happens, a loss of system vacuum occurs as the system is open to atmosphere. The fault monitoring system will recognize this low vacuum condition and alert the operator of the problem. A common cause of failure in this position is the entrance of extraneous water into the controller.

Valve failures, if not located and corrected in a reasonable amount of time, may cause failures in other parts of the system. A valve that is hung open or that continuously cycles will cause system vacuum to drop. If the vacuum pumps can not keep up with this vacuum loss, the result is insufficient vacuum to open other valves. This, in turn, may lead to backups. When vacuum is finally restored, a large amount of sewage, in relation to the amount of air, will be introduced into the system possibly resulting

in "waterlogging". When this occurs, the system must be manually operated, allowing the vacuum pumps to run longer than usual. Repetitively cycling the vacuum and sewage pumps in effect increases the capacity of the vacuum station. This repetitive cycling is continued until the system "catches up". At that point the system is returned to its automatic mode.

7. Record Keeping

Good records are important for the efficient, orderly operation of the system. Pertinent and complete records provide a necessary aid to control procedures as they are used as a basis of the system operation. The very first step of any troubleshooting procedure is an analysis of the records. This is especially true of the collection system. A wealth of information is contained in the basic records kept on a daily basis.

The following types of records should be kept:

* Normal maintenance records
* Preventive maintenance records
* Emergency maintenance records
* Operating costs records
* Personnel record

These records should be carefully preserved and filed where they are readily available to operating personnel. All records should be neat and accurate and made at the time the data is obtained.

NORMAL MAINTENANCE RECORDS

The following records should be kept on a daily basis:

* Date
* Personnel on duty
* Weather conditions
* Routine duties performed
* Operating range of vacuum pumps
* Run times of vacuum pumps
* Run times of sewage discharge pumps
* Run time of standby generator
* Flow data
* Complaints received and the remedy
* Facilities visitors
* Accidents or injuries
* Unusual conditions
* Alterations to the system

In addition to this daily information, an annual report should be prepared to summarize the operational characteristics of the system.

PREVENTIVE MAINTENANCE RECORDS

Adequate records provide information which tell operational personnel when service was last performed and indicate approaching service requirements. Necessary scheduling of maintenance can then be made without overlooking important aspects of system operation.

Results of periodic inspections should be kept. This would include a list of all problems, the cause of the problem, the repairs, and recommendations for future improvements.

EMERGENCY MAINTENANCE RECORDS

Records should be kept concerning all emergency maintenance. This includes the following:

* Date and time of occurrence
* Person(s) responding to problem
* Description of problem
* Remedy of problem
* Parts and equipment used
* Total time to correct problem
* Recommendations for future improvements

OPERATING COST RECORDS

To insure budget adequacy, it is very important to keep accurate information concerning the costs of all operation and maintenance items. Costs include:

* Wages and fringe benefits
* Power and fuel consumption
* Utility charges
* Equipment purchases
* Repair and replacement expenses
* Chemicals
* Miscellaneous costs

PERSONNEL RECORDS

Personnel records should be kept on all employees. Each file should include information about employment application, change of status, absences, vacation time, and an evaluation of performance by the immediate supervisor.

8. Troubleshooting

A procedure for locating the source of a vacuum failure has been developed by AIRVAC as follows:

* When a low vacuum condition occurs in the system, isolate each incoming line to the collection tank to identify the problem line.

* Close off the problem line. Open the remaining lines to clear the sewage from them.

* Allow vacuum in the operational lines to reach the maximum vacuum level possible; then close these lines off.

* Open the line with the problem.

* Starting at the collection tank, go to the first division valve on the problem line. Connect a vacuum gage to a nearby vacuum valve (or to a gauge tap, if one exists) downstream of the division valve. Close the division valve and observe if vacuum builds up. If it does not, the problem is between the vacuum station and the division valve. If vacuum rises, repeat the process on the next division valve. Before reopening each division valve, allow vacuum to build up in the non-problem sections of the sewer to clear that section's sewage.

* After isolating the problem section, check each valve pit to locate the malfunction. Often this can be accomplished by driving to each pit and listening for the sound of rushing air in the auxiliary vent.

* After locating the malfunctioning valve, follow the manufacturer's valve troubleshooting procedures.

* If no valves are malfunctioning, check for underground construction that could have caused a break in the transport piping. Also, walk the route of the problem sewer and look for evidence of a break, such as a sunken area.

The above procedure is a systematic approach to locating the source of vacuum loss. Sometimes a shortcut can be taken. In a recent study of operating systems, it was found that many times the same valve(s) fail. This is usually due to some particular hydraulic condition at that specific locale. In these systems, the operators check these valves before any other isolation is done. In another situation, a skilled operator can usually tell how far from the vacuum station the problem is simply by analyzing the vacuum charts. This allows for the simplification of the isolating procedure.

There have been attempts made to determine the time necessary to locate a failed valve. At AIRVAC's Plainville, Ind. location, a valve was caused to fail at a location unknown to the maintenance personnel. This valve was located and the problem corrected in 21 minutes. System operators report that the typical valve failure is located within 30 to 45 minutes. Most also cite driving time from their house to the system as being the critical factor in this response time. A key component in continual operation is an effective alarm system, coupled with available maintenance personnel.

9. Evaluation of Operating Systems

a. Early Vacuum Systems

Early vacuum systems were often plagued with consistent operational problems. These systems were installed without sufficient field testing of system components. In addition, operation and maintenance guidelines were not yet available. As a result, several operational problems were encountered.

Early systems, particularly those by Vac-Q-Tec, experienced problems because of the lack of knowledge of the two-phase transport concept. Small vacuum mains, improperly planned vacuum main profiles, too large liquid slug volumes, and insufficient air all resulted in transport problems.

Vac-Q-Tec's systems also located sensitive electronic valve control equipment in 55 gallon drums near to the sewage holding tanks. Corrosion of these drums and the control boxes caused numerous problems. The complex electronic control system proved to be a major drawback as highly skilled technicians were required to operate the system. Valves on Vac-Q-Tec systems are presently being retrofitted with AIRVAC valves.

Early Colt and AIRVAC systems lacked components that are now generally accepted as minimum design standards. The lack of standby power and fault monitoring devices are examples. The lack of standby power indirectly caused the Colt valve boot to rupture. During power outages, liquid built up behind these valves. When power was restored and the valves cycled, the higher than normal column of water resulted in the timed valve operation sequence closing on the column of water instead of on air. This "water hammer" of sorts resulted in unusually high forces which ruptured the valve boots. These problems were alleviated to a large degree when standby power was added to the system.

AIRVAC's early valve pits were made of a tar-impregnated paper which deformed when placed in unstable soil or in areas subjected to vehicle traffic. This deformation eventually led to damaged valves. Additional problems resulted from the use of valve pits without bottoms in areas of high groundwater. In this case, water entered the sensitive sensor-controller causing the valves to continually cycle and eventually deplete system vacuum. Corrective measures included replacement of the early valve pits with fiberglass pits capable of

withstanding traffic loadings. Breather tube extensions above ground and controller modifications have minimized these past problems.

Simply stated, the early vacuum systems suffered from growing pains. A better understanding of vacuum sewer hydraulics, improved system components, and established operation and maintenance guidelines have led to significant operational improvements.

b. Recent Vacuum Systems

Although operational reliability has improved with each successive generation of systems, some problems still exist. Six operating systems were visited in 1989 so that meaningful operation and maintenance data could be generated. An attempt was made to visit systems that would give a good cross section of the technology. Topography, geographical location, size, and varying design concepts were considered in the selection process. One early system was visited to see if improvements through the years has resulted in increased reliability.

TABLE 18
OPERATING SYSTEMS VISITED IN 1989

PROJECT NAME	LOCATION	DATE OPERATIONAL	SYSTEM TYPE
Ocean Pines	Berlin, Md.	1970	VAC-Q-TEC
Westmoreland	Westmoreland, Tenn	1979	AIRVAC
Ohio Co-Phase I	Wheeling, WVa	1984	AIRVAC
Lake Chautauqua	Celeron, N. Y.	1986	AIRVAC
Central Boaz PSD	Parkersburg, WVa	1988	AIRVAC
White House	White House, Tenn	1988	AIRVAC

GENERAL INFORMATION

Table 19 gives general information on each of the systems visited.

TABLE 19
GENERAL INFORMATION
ON OPERATING SYSTEMS

	Ocean Pines	Westmor.	Ohio County	Lake Chaut.	Central Boaz	White House
L.F. of Pipe	285,000	83,000	43,000	121,000	39,000	65,000
# Vac. Stations	12	4	1	4	1	2
# Valves	1500	490	200	900	180	260
# Homes served	3500	540	250	2500	350	360
Topography	Flat	Rolling	Hilly	Flat	Flat	Rolling
Soils	Sandy	Rock	Clay	Sandy	Sandy	Rock
Community Age	New	Old/New	Old	Old	Old/New	Old/new
Seasonal Pop.?	No	No	No	Yes	No	No
Mean Income	High	Middle	Middle	Middle	Middle	Middle

DESIGN/CONSTRUCTION DATA

Table 20 shows design and construction data as it relates to the collection systems of each of the systems visited.

TABLE 20
DESIGN/CONSTRUCTION DATA
COLLECTION SYSTEM

	Ocean Pines	Westmor	Ohio County	Lake Chaut.	Central Boaz	White House
Valve Type	Vac-Q-Tec	AIRVAC Model-D	AIRVAC Model-S	AIRVAC Model-S	AIRVAC Model-D	AIRVAC Model-D
Pipe material	solvent welded	solvent welded	solvent welded	rubber gasket	rubber gasket	solvent welded
Diameters (in.)	all 4	3, 4, 6	3, 4, 6	3, 4, 6, 8	3, 4, 6	3, 4, 6, 8
Min Cover (ft.)	3	4	3	4	3	4
Min. Slope	none	0.2%	0.2%	0.2%	0.2%	0.2%
Div. Valve	Plug	Plug	Plug	Plug	Gate	Plug
Thrust Blocking	No	Yes	No	Yes	No	No
Multi-branches	Yes	Yes	Yes	Yes	Yes	Yes
Longest line (ft)	Unknown	Unknown	8,000	8,500	6,500	8,200
Design Concept	none	reformer pocket*	early AIRVAC	early AIRVAC	early AIRVAC	current AIRVAC
Pit/House Ratio	.43	.91	.80	.36	.51	.72
Type Sumps	concrete 700 gal	2 pit fbgls	fbgls	fbgls	fbgls/ concrete	fbgls

* Converted over the years to meet "early AIRVAC" design standards

Table 21 shows design and construction data as it relates to the vacuum stations of each of the systems visited.

TABLE 21
DESIGN/CONSTRUCTION DATA
VACUUM STATION

	Ocean Pines	Westmor	Ohio County	Lake Chaut.	Central Boaz	White House
# Probes	Multi	Multi	Single	Single	Single	Multi
Equalizing Lines	No	Yes	Yes	Yes	No	Yes
Odor Filters	Yes	No	No	No	Yes	No

OPERATION AND MAINTENANCE DATA

Significant improvements have been made to the components in the last ten (10) years, particularly to the valve controller unit. This has been attributed to a combination of research and testing and an increased quality control effort. It is estimated that this alone has reduced the problems that plagued the early systems by 50%. Continuing to educate the designers, builders, and operators of proper techniques will result in a further reduction of the problems. Evidence of this is starting to surface in some of the more recently constructed systems.

Operation and maintenance data was gathered on each of the systems visited. This data is presented in Tables 22 through 25.

TABLE 22
OPERATION & MAINTENANCE DATA
GENERAL INFORMATION

	SYSTEM A	SYSTEM B	SYSTEM C	SYSTEM D	SYSTEM E	SYSTEM F
# Operating personnel	8	6	5	7	1	3
Other duties ?	No	Yes	Yes	Yes	Yes	Yes
# Men needed for vacuum part of system	8	1	1	2	1	1

TABLE 23
OPERATION & MAINTENANCE DATA
MANHOURS/YEAR

	SYSTEM A	SYSTEM B	SYSTEM C	SYSTEM D	SYSTEM E	SYSTEM F
Normal Maint. (hrs/yr)	16,640	1,915	260	365	315	260
Prev. Maint. (hrs/yr)	2,500	245	100	1,013	90	200
Emerg. Maint. (hrs/yr)	1,660	192	240	48	384	60
Total manhours/yr.	20,800	2,352	600	1,426	789	520
# of valves	1,500	490	200	900	180	260
Manhours/yr/valve	13.9	4.8	3.0	1.6	4.4	2.0
# of customers	3,500	540	250	2,500	350	360
Manhours/yr/cust.	5.9	4.4	2.4	0.6	2.3	1.5

TABLE 24
OPERATION & MAINTENANCE DATA
POWER CONSUMPTION/YEAR

	SYSTEM A	SYSTEM B	SYSTEM C	SYSTEM D	SYSTEM E	SYSTEM F
Power cost/yr ($)	120,000	15,000	2,400	27,540	4,800	3,900
# of valves	1,500	490	200	900	180	260
Cost/yr/valve ($)	80.00	30.60	12.00	30.60	26.51	15.00
# of customers	3,500	540	250	2,500	350	360
Cost/yr/cust. ($)	34.29	27.77	9.60	11.30	13.71	10.83

TABLE 25
OPERATION & MAINTENANCE DATA
MEAN TIME BETWEEN SERVICE CALLS

	SYSTEM A	SYSTEM B	SYSTEM C	SYSTEM D	SYSTEM E	SYSTEM F
of valves	1,500	490	200	900	180	260
# service calls/yr	1,500	48	24	40	30	24
Mean Time Between Service Calls (MTBSC) (years)	1.0	10.2	8.3	22.5	6.0	10.8

c. Summary

An EPA Technology Transfer Seminar Publication, prepared in 1977, detailed the failure rate (MTBSC) of some of the early vacuum systems. In general, the MTBSC of the early systems ranged from 0.06 to 8.33-years. All but one of the systems had a MTBSC of less than 4-years. By contrast, all of the systems studied in 1989, with the exception of the early system, had a MTBSC of greater than 6-years, with the average being approximately 10-years. This indicates that component improvements coupled with design advancements has had a tremendous impact on the reliability of vacuum systems.

10. Past Operating Problems

Each of the systems visited experienced some type of problem which predominated as a demand on O&M staff time. However, most were short lived. Table 26 describes the types of problems found.

TABLE 26
PROBLEM CLASSIFICATION

Problem	Responsible Party	Avoidable/ Unavoidable	% of Total Problems
Component defect	Manufacturer	Avoidable	40 %
Design shortcomings	Engineer	Avoidable	10 %
Operator error	Operator	Avoidable	5 %
Construction related	Contractor	Avoidable	25 %
Equipment malfunction	Manufacturer	Unavoidable	5 %
Extraneous water related	Customer	Unavoidable *	15 %

* In theory, this should avoidable with proper smoke testing, I/I analysis and correction prior to construction. However, operators report that no matter what the effort, some amount of extraneous water usually enters the system.

A sophisticated statistical analysis was not performed to develop the above percentages. The percentages were determined by a combination of frequency of occurance and demand on staff time as reported by the sytem operators that were interviewed. They are presented only for the purposes of putting the different problems into perspective.

Assuming the percentages roughly approximate reality, 80% of the problems to date can be categorized as avoidable. This does not mean that they were not or are not problems. With good design, construction, inspection, training, and quality control, however, these problems can be avoided in future systems.

COMPONENT DEFECTS

Broken Spring-Valve failure in open position

Shortly after startup of one system, an unusual amount of valve failures were occurring. It was determined that these failures were caused by a broken spring in the valve controller. An investigation revealed that the springs were made of defective material. The springs were systematically replaced with new ones, an effort that two men accomplished on a part time basis over the span of a month period.

This effort did not require the removal of the valve itself. Using spare parts, the District put new springs in the controller component of the valve at their workshop. After a sufficient amount of controllers were rebuilt, they were taken to the field where they were simply was put in the place of the controller with the defective spring, a procedure that took 10 minutes per valve. These defective controllers were then brought back to the shop where the procedure was repeated until all controllers were rebuilt with the proper spring. This problem has not since returned.

Unreliable valve controllers

The original valves in one system had a controller that was different from the ones used presently. They were found to be very unreliable. The result was more valve failures, and hence, more O&M expense, that originally anticipated.
In the 1970's, AIRVAC designed and patented their own controller. After the successful testing of these controllers at their Indiana facility, they began mass production.

Every valve in the system has since been retrofitted with the AIRVAC controller. The failure rate has been greatly reduced since the changeover.

Controller shaft/seal problems-Multi-firing valves

Some valves were found to cycle more than once after the sump was emptied. A redesigned controller shaft and seal has solved this problem. Controllers with the old shaft and seal have been retrofitted with the latest version.

Plug valve problem

The type of division valve used in most operating systems is the plug valve. Some systems have experienced major problems with plug valves while others have not.

Problems reported in one system included times when system vacuum pulled the division valve closed thereby cutting off system vacuum beyond that point. As workers attempted to re-open these valves, frequently the valve shaft was twisted off due to the heavy load applied by system vacuum. When this happened, the division valve could not be opened resulting in part of system being out of service, until corrective measures were taken.

Some system operators reported problems with plug valves not holding vacuum when closed. This renders them useless as troubleshooting tool, which is their primary purpose.

Problems with plug valves have been attributed to quality differences between manufacturers, in some cases, and to defective materials in others. Plug valves without these qualities can and have been used successfully.

Some recent systems have used resilient-wedge gate valves instead of plug valves with much success. With proper care in selection process, both types of valves can successfully be used.

Defective tubing-Valve failure in open position

Some valve failures that occurred after startup of one particualr system was caused by defective tubing in the controller. These tubes were systematically replaced with new ones. This problem has since not re-ocurred.

DESIGN SHORTCOMINGS

Discharge pump cavitation

Some systems have reported problems with sewage discharge pump cavitation. This is due to the actual characteristics of the pump itself. A vortex plate installed in the bottom of the collection tank is one method of correcting this problem, assuming the pump has already been installed.

The real solution lies in proper design. Net positive suction head (NPSH) calculations should be done. Section D of this Chapter discusses these calculations. A pump having sufficient NPSH available should be selected.

Leaking check valves

Check valves between the vacuum pumps and the reservoir tank installed in a vertical pipe run can result in problems (i.e.-vacuum leak in the station piping). Locating the check valves in a horizontal run of station piping will prevent this problem.

Oversized vacuum pumps keep up with open valve

One of the newest systems in operation was designed with the most recent design guidelines, which are more conservative than in the past. This resulted in larger vacuum pumps than would be selected using the old design standards. While this additional capacity has helped in terms of system pump-down time, it also has caused a small problem.

The vacuum pumps appear to have sufficient capacity to keep up with an open valve. This being the case, low vacuum is not recorded at the station, even though it is occurring at the location of the open valve. In addition, the automatic telephone dialer is not activated. This results in increased run time of the vacuum pump and increased power costs. In order for the problem to be noticed, the operator must be very observant when analyzing the daily vacuum charts to notice that the pumps are cycling more frequently than normal. Otherwise, a valve that is hung open may go unnoticed for days resulting in a waste of power.

A simple solution to this problem involves installing another relay in the control wiring that causes the dialer to call the operator if both pumps are running together for a predetermined amount of time (say 10 minutes), despite the vacuum level.

OPERATOR ERROR

Sewage pulled into vacuum pumps

A high sewage level in the collection tank can be caused by pump failure (usually control related rather than actual pump malfunction) or by more flow coming in than the sewage pumps are capable of pumping out. The system design normally calls for an automatic shut-down of both vacuum and discharge pumps in the event of this happening. Some systems, however, do not have provisions to prevent the automatic mode from being overridden by manual operation.

The natural inclination, when faced with a zero (0) vacuum situation, is for the operator to manually operate the vacuum pumps in an attempt to restore system vacuum. Doing this with a full collection tank can result in sewage being pulled into the vacuum pumps. This can result in damage to the vacuum pumps, especially with a sliding-vane type.

The proper procedure, assuming the discharge pumps work, is to valve off the incoming lines and turn the vacuum pumps off. The discharge pumps are then used to pump the collection tank down to the normal operating level. The line valves can then be opened and the vacuum pumps returned to their automatic mode. Good design will include electrical provisions to prevent overriding the automatic mode without these steps first being taken.

CONSTRUCTION RELATED

Line break

Line breaks, caused by a trench settlement, were most likely the result of inadequate bedding materials or poor compaction during construction.

Broken fittings

There have been cases of loss of system vacuum due to broken fittings. In all but a few cases, the failures have occurred at fittings at or near the valve pit. This is most likely due to insufficient compaction around the valve pit coupled with system rigidity due to solvent welded fittings.

Construction debris-valve failure in open position

Most systems experienced problems shortly after start-up. Construction debris (stones, small pieces of pipe, etc) in the homeowner's building sewer causes the vacuum valve to hang open until manually cleared. These problems usually disappear within a few weeks of startup. Problems of this nature are easily discovered by the operator simply by listening to the auxiliary vent. Hearing the constant rushing of air is a good indication that valve is hung open. Opening the valve pit, unscrewing the valve body and clearing the obstruction is a 10-minute procedure.

Extreme heat in the station

Temperatures approaching 175 degrees were reported in one system shortly after startup. The hot air from the vacuum pumps was blown directly at the motor control center (MCC). The extreme heat caused relay and starter problems in the MCC which resulted in pump and telephone dialer malfunctions.

An analysis of the situation revealed that the vacuum pumps were wired incorrectly. Rather than the pump fans coming on when the temperature reached 150 degrees and remaining on until the pumps turned off, the fans came on at the same time the pumps did and ran for a timed 10-minutes. This has been corrected and the result is a much cooler vacuum station. Future plans call for the hot air to be directed away from the MCC through duct work.

Broken cleanouts

A few cases of broken cleanouts have occurred. Breaks in fittings adjacent to the cleanouts were believed to be caused by pit settlement due to poor compaction.

EQUIPMENT MALFUNCTION

Faulty level control transmitter

At one system, a problem with one of the level probes occurred. The probe failed to send the proper signal to the motor control center to turn the vacuum pumps off during periods when high sewage levels existed in the collection tank. This resulted in sewage being pulled into the vacuum pumps causing damage. Another time the probe failed to send the proper signal to the motor control center to turn off a discharge pump. This resulted in the pump continuing to run until the tank was dry. The problem was traced to a faulty transmitter which was replaced.

Since failure of the probe can lead to the ruining of a vacuum and/or sewage pump, the operator developed a simple inexpensive backup system. This involves the use of a magnet strapped to the site glass above the highest set point of the probe and one below the lowest set point of the probe. A third, float mounted magnet, held inside a plastic tube, moves with the level of the tank inside the site glass. Should the probe fail and the level rise (or fall) beyond the last set point, the two magnets will meet causing a circuit to close and the appropriate pumps to either start or stop.

Telephone dialer malfunctions-Interference

At one system the automatic telephone dialer malfunctioned by calling the operator only to report that the system "was all clear". Investigation of this problem revealed that interference from the motor control center, caused by electrical spikes, was sending false signals to the dialer. Shielded cable added to the dialer wiring did not help. The dialer was taken out of the MCC and mounted on a nearby wall. This corrected the problem.

It is now known that the microprocessor based equipment is very sensitive to power spikes. Provisions should be made during design to filter the power supply or to provide a separate "clean" power supply to this kind of equipment.

Telephone dialer malfunction-undetermined

A big problem in one of the earlier systems has been the inability of the telephone dialers to function properly. Without a dialer, which provides 24-hour a day coverage, problems go unnoticed until the next work day. While this has reduced the amount

of overtime significantly, it has also resulted in increased run times. The operating personnel apparantly feel that the system is reliable enough (i.e., oversized vacuum pumps can keep up with a valve failure) and valve failures are so infrequent that replacing the dialers cannot be economically justified.

The above rationale may be a case of false economy. Allowing a low vacuum situation to go undetected for hours will result in unnecessary additional run time of the vacuum pumps. This will result in increased power costs as well as increased wear on major equipment. This increased wear leads to decreased equipment life. A high sewage level in the collection tank typically results in total system shut-down until the operator corrects whatever is wrong. With no dialer to notify the operastor of this situation, the system may be shut-down for hours at a time. This will lead to waterlogging, which will require a significant labor effort to correct. Even more serious is the liability potential that exist as a result of damage done by system backups into the customers homes. For these reasons, telephone dialers are considered to be an absolute must component in the vacuum station.

EXTRANEOUS WATER RELATED

System waterlogging

One of the most severe problems that can occurred with the collection system is loss of vacuum due to "waterlogging". This occurs when sewage is admitted to the system with insufficient atmospheric air behind it. (See Section F.6 for a discussion on waterlogging). The result in ever decreasing vacuum levels beyond the waterlogged section. This may lead to insufficent vacuum to open the vacuum valves and ultimately to sewage backup in the home. In most cases, waterlogging is caused by too much liquid (extraneous water) entering the system at one time. This is a very difficult problem to address since it typically is related to illegal and difficult to find storm sewer connections by the customer. An aggressive I/I program will keep problems such as these to a minimum.

Water in controller-Valve failure in open position

Component defects have been responsible for many of the valve failures in the past. With these failures being drastically reduced by component improvements, one of the remaining ways for a valve to fail is through water in the controller. Water in the controller will prevent it from completing its cycle and the valve will remain open. This problem is more likely to occur with the AIRVAC Model "S" valve than the Model "D" valve. (See Section D.4 for a discussion on Model "S" and "D" valves.)

In either the Model "S" or Model "D" valve, water can enter the controller in two general ways. In the first way, water that is present in the upper valve chamber enters directly into the controller as a result of the controller not being air and/or vacuum tight. A tightness test is normally done at installation, during the annual preventive maintenance, and any time emergency maintenance is performed on the valve. The other possibility is through condensation in the breather tubing. A properly installed breather line, with a drain leading to the valve, will prevent this second case from ocurring.

With the Model "S" valve, a third possibility exists. In this case, water comes directly from the lower sump to the controller. The Model "S" valve requires a watertight seal between the upper and lower sections of the valve pit so that a bubble of air can be trapped for use by the valve controller during its cycle. Should the seal be broken and water take the place of air, it will be drawn into the controller by vacuum when the valve cycles.

III. VACUUM SEWER SYSTEMS

G. SYSTEM COSTS

SECTION G

SYSTEM COSTS

1. Construction

Certain site conditions make conventional sewer installation expensive. These include unstable soils, rock, and a high water table. In addition, restricted construction zones or areas that are flat may also carry high construction costs. By using vacuum sewers, the construction costs for these difficult conditions can be reduced. Smaller pipe sizes installed at shallower depths are the prime reasons for this. The uphill transport capability, even when used only to a very small degree, may save many dollars in installation costs. One other major advantage is the extent to which unforeseen subsurface obstacles can be avoided. Each of these considered individually results in lower costs. Considered collectively, they may result in substantial cost savaings.

There are three key costs that will materially affect the price of a vacuum system: the vacuum station, the pipe, and the valve pits. The price of the vacuum station depends very much on the equipment selected, the type of structure it is house in, and the amount of excavation required. The pipe installation prices depend on pipe diameter, trench depth, and soil conditions. Valve pit costs will vary depending on the type of valve, type of pit, and depth of pit. These three items typically make up 60-80% of the total bid. The remaining items include appurtenances, testing, and restoration.

Many factors affect construction cost bids. Material surpluses or shortages, prevailing wage rates, the local bidding climate, geographic area, time of year, soundness of the design documents and the design engineer's reputation are examples of these. As such, it is impossible to accurately predict construction costs on a nationwide basis. Using sound engineering practices, however, the engineer should be able to make a fairly accurate estimate of the construction costs. The following steps may be of some value for engineers considering vacuum sewers for the first time:

* Analyze bid tabulations of other vacuum projects. It is desirable to use a project that is in the same geographical area and having similar site conditions.
* Request a set of plans and specifications in order to gain a full understanding of what each bid item includes. Ask about any peculiar or unusual bidding conditions.
* Estimate the cost of the system by applying modified unit prices that take into consideration the locale and site conditions.
* Correct for inflation by applying cost indexes.

Because of the many factors that influence a bid, it is difficult to say if the above procedure will yield information of quantitative value, although qualitative assistance is possible. Quite simply, the project will cost what the low bidder feels it will cost.

It is not uncommon for a wide range of bids to be received on an engineer's first vacuum project. Contractors unfamiliar with vacuum sewers may bid high simply because of the fear of the unknown (e.g., bid as if the project was a gravity sewer). Equally possible is a contractor who bids too low because of an underestimation of the effort required (e.g., bid as if it was a water line). Usually the cost is somewhere between these two extremes. Once the contractors have experience constructing vacuum sewers, the spread between low and high bid diminishes. It then becomes much easier for the engineer to estimate the construction costs of future projects.

Most engineers are capable of estimating capital costs in their geographic area of practice once major material component costs are known. Installation costs can be developed by analyzing the effort required to install conventional technology and applying the appropriate modifications to the unit prices to correct for the local site conditions.

2. Operation and Maintenance Costs

The obvious advantage to utilizing vacuum sewers is a savings of capital costs. This savings, however, may come at the expense of higher operation and maintenance (O&M) costs. The question then becomes, "Is the savings of capital cost enough to offset the increase in O&M expenses"? A present worth analysis, where life cycle costs are converted to present values, will answer this question. This analysis, however, is only valid if reasonable capital and O&M cost figures are used.

Very little historical cost data exist because of the relatively new nature of the vacuum sewers. This is especially true for operation and maintenance costs. This lack of data has led many to the conclusion that vacuum sewers must be O&M intensive. A review of cost records of operating systems suggests that previously published O&M figures no longer apply. Reasons for this are twofold. First, the previous figures were based on very limited data on a few early systems. Second, component improvements in the valve have resulted in significantly fewer service calls, and hence, lower O&M costs. These factors render the previously published data obsolete.

Information gathered from the systems that were visited in 1989 is presented in the following sections. Data from the Ocean Pines system is not included since this system is not representative of the current state of vacuum technology.

Table 27 shows typical O&M cost components.

TABLE 27
TYPICAL O&M COST COMPONENTS

	Labor	Normal, preventive, & emergency
*	Clerical	Billing
*	Power	Vacuum & sewage pumps
*	Utilities	Water, phone, fuel
*	Transportation	Vehicle amortization, fuel, ins.
*	Supplies/maintenance	Maintenance contracts
*	Misc. expenses	Insurance, professional fees
*	Equipment	Renewal and replacement
*	Future connections	Set-aside amount (if required)

a. Labor

Labor costs are estimated by multiplying the number of manhours required by the hourly rate, and adding fringe benefits. The annual manhour requirements are made up of normal, preventive, and emergency maintenance.

For normal maintenance, an operator is not required 24 hours a day to monitor the system, as the telephone dialer does this for him. However, someone must be available around the clock in case the telephone dialer calls with a problem. In this respect, vacuum systems are unique. Very few problems in a vacuum system can go uncorrected for any length of time without causing a cumulative effect.

The operating entity's overall responsibilities should be considered when estimating the labor costs. For example, the entity may also be responsible for other sewer facilities, or possibly even water facilities. In these cases, operating personnel are usually shared. At the end of the year, the time charged to the operation of the vacuum system most likely will relate exactly to the effort required (e.g., one (1) hour per day plus some hours charged to emergency maintenence). If the overall facilities are large enough to warrant different shifts, emergency work most likely will be done without overtime being required.

An entirely different situation exists for the entity operating nothing but a similarly sized vacuum system. Typically a full time operator is hired. This man charges 8 hours a day to the maintenance of the system although most days he will spend much less than this. Should a problem develop after normal working hours, he most likely will be paid overtime. Even though both operators will spend the same amount of <u>actual maintenance time</u>, the amount of <u>billed time</u> will be entirely different. The engineer should carefully analyze the client's overall operation, taking into consideration the possibility of shared duties, prior to making an estimate of the labor costs.

Preventive maintenance is usually scheduled to be done by the normal work force during off peak working hours. Because of this, preventive maintenance is usually reported as normal maintenance.

Emergency maintenance many times requires personnel after normal working hours. The result is overtime pay. In addition, emergency maintenance typically requires two men.

Table 28 gives a range of manhours required per year as a function of the number of vacuum valves. This table was based on data from the systems that were visited in 1989. As such, the values shown should be considered as realistic values for new systems with proper design, construction, and operation.

TABLE 28
MANHOUR ESTIMATING FACTORS
MANHOURS/YEAR/VALVE

	LOW	HIGH	AVE
NORMAL	0.4	3.9	1.7
PREVENTIVE	0.5	1.1	0.7
EMERGENCY	0.2	1.2	0.6

When a full time operator is to be hired, regardless of anticipated work load, the values in Table 28 should not be used. In this cases, the estimated annual manhour requirements should include the full time hours of employment plus an estimate of the overtime (emergency maintenance) hours, taking into consideration overtime work generally requires two people. No allowance is needed for preventive maintenance since this can be done during normal working hours.

The following formula can be used to estimate annual labor hours for these cases. This formula assumes a 40 hour work week and that some of the emergency maintenance will occur during normal working hours.

2080 hrs/yr + (.75 x Emergency factor x # valves x 2)

EXAMPLE

No. of valves : 200

Emergency factor: 0.5

Annual labor hours = 2080 + (.75 x 0.5 x 200 x 2)

= 2080 + 150

= 2230

b. Clerical

This items includes wages for the clerical staff. Also included would be the billing costs such as envelopes and stamps. Like labor costs, the value of this item most likely will depend on whether the operating entity has an existing, on-going operation which requires office staff. If so, the costs would be limited to the direct billing expenses only.

c. Power

Power is required for the vacuum pumps, the sewage pumps, and for heating and lighting of the vacuum station. Once the design is completed, it is possible to estimate the annual power consumption with a high degree of accuracy.

Power costs for the pumps are estimated by using the following general formula:

$$P = T \times H \times .746 \times C$$

where P = Annual power cost
T = Time of operation (hrs/yr)
H = Horsepower
C = Cost of electricity ($/kwhr)

This formula does not include any surcharge the power company may assess on peak demands. The local rate structure of the power company should be analyzed and an appropriate surcharge estimated.

The capacity of the vacuum pumps, and the resulting horsepower requirements, can be determined by using the formulas in the Section D. Likewise, the run time of the vacuum pumps can also be determined. An allowance, typically an additional 10 to 20 %, should be made in the run time to account for leaks, breaks, and valve failures.

The capacity of the sewage pumps, and the resulting horsepower requirements, can be determined by using the formulas in the Section D. Run time is estimated by the following formula:

$$T = 6.08 \times F/Q$$

where T= Time of operation (hrs/yr)
F = Average daily flow (gpd)
Q = Pump capacity (gpm)

There are also power costs for heating, ventilation and lighting at the vacuum station. These generally, amount to less than $50 a month.

For planning purposes, values shown in Table 29 can be used to estimate the annual power consumption for the entire vacuum station. These factors were derived from information obtained from the systems visited in 1989.

TABLE 29
VACUUM STATION POWER CONSUMPTION
ESTIMATING FACTORS
KwHr/YEAR/CUSTOMER

LOW	HIGH	AVE
160	460	250

It should be noted that the high factor was for a early vacuum system that was designed under the reformer pocket theory. This design concept results in a sealed pipe bore during static conditions, which is less efficient method of conveyance. The average figure is a more accurate representation of the power requirements of recent vacuum systems.

d. Utilities

Utilities at the vacuum station generally include water, phone and fuel. Water may be required for sinks, hose bibs, or toilets. A telephone is required for the fault monitoring system. Some systems make use of cellular phones, while others use radio communications rather than a telephone. Fuel is required for the standby generator. The cost of these utilities generally is less than $50 a month.

e. Transportation

Vehicle expenses to maintain the system will be incurred. For estimating purposes, a mileage rate multiplied by the estimated annual miles will suffice. This rate should include vehicle amortization, depreciation, taxes and similar expenses. Mileage will be required for the following tasks:

* Daily visits to the vacuum station
* Annual visits to valve pits for preventive maintenance
* Periodic emergency maintenance

f. Supplies/maintenance

As with a conventional system, certain supplies will be required. Restocking of spare parts and inventory is included in this item, as are oil, fuses, charts and chart pens. Initial purchase of items on quantity discount should be maximized to take advantage of the lower unit costs when compared to subsequent prices for replacement.

Service contracts for emergency generators as well as fuel for the generators is also included in this item.

g. Miscellaneous expenses

Miscellaneous expenses include insurance on the system structures as well as professional services (engineering, accounting, legal) that may be required during the year.

h. Equipment renewal and replacement

An annual set aside account should be established to generate sufficient funds for major equipment renewal and replacement. The annual cost is estimated by dividing the replacement cost by the useful life. This amount is generally set aside in an interest bearing account until needed. Present dollars can used in the estimate since the interest earnings most likely will offset inflation. Altenative methods dictated by regulatory agencies also can be employed.

Table 30 lists the major equipment items, and their useful life.

TABLE 30
TYPICAL RENEWAL AND REPLACEMENT FACTORS

ITEM	USEFUL LIFE
Vacuum pumps	10 years
Sewage pumps	10 years
Vacuum valve rebuild	6 years
Misc. station equipment	10 years

i. Future service connections

The costs of future service connections may have to be included in the O&M budget. Unlike conventional systems, where a future connection may be relatively inexpensive, a future vacuum connection can be quite costly. The costs of a valve, valve pit/sump, fittings, pipe, and labor may approach $2,000.

Most systems that were visited simply charge the future customer the cost of the connection. This does not appear to be a problem, since most new houses would have a similar expense for an on-lot system. In this case, the annual operating budget does not have to include a line item for future service connections.

In West Virginia, however, this is not the case. Sewer utilities are regulated a Public Service Commission. This agency will not approve a tap fee greater than $250, regardless of the type of system. For this reason, the operating entity must include the cost of future connections in their rate package as an annual set-aside. The total installation cost is discounted by the $250 tap fee and multiplied by the number of estimated annual future connections. Since some future customers may be able to connect to an existing valve pit, a sharing factor may be applied. This method, in essence, requires present customer to subsidize the cost of future connections.

A modification of this concept includes prefinancing a set amount of future connections in the construction capital budget, and adjusting the annual set-aside amount accordingly. An example calculation of this set-aside amount follows:

# vacuum customers	140
# vacuum valves	110
Sharing factor	78%
20 year growth rate	15%
Cost of new service	$2,000
Tap fee	$ 250
# prefinanced connection	8

# of future customers	= .15 × 140 = 21
# of future connections	= .78 × 21 = 16
# prefinanced connections	= 8
	8

Net cost of connection	= 2,000 - 250 = $ 1,750
Total Set-aside required	= 1,750 × 8 = $14,000
Annual set-aside required	= 14,000/20 = $ 700

3. User Charge/Assessments

To generate sufficient revenues to offset expenses, the operating entity must develop a user charge system. Components of the annual budget are:

* O&M expenses

  Labor
  Clerical
  Power
  Utilities
  Transportation
  Supplies/maintenance
  Miscellaneous expenses
  Equipment renewal and replacement
  Future service connection

* Debt Service

There are many different methods of developing rates. A common method includes a charge based on metered water consumption, with a flat rate for non-metered users. The rate structure may be the same for all usages, or may decline as water use increases. Others simply charge a flat rate for all users. No matter what system is used, the rates must be sufficient to generate the required revenue.

Most tariffs include provisions for tap fees. These generally cover initial users of the system as well as future users. The initial tap fees are generally used to cover start-up expenses. Tap fees for future connections are used to offset all or part of the actual cost to make the connection.

As an example, the projected annual operating budget of a project in West Virginia is presented below. This project is scheduled for construction in 1991, with operation to begin in 1992. The project consists of a hybrid collection system (vacuum, pressure, and gravity) and a treatment plant.

GENERAL PROJECT INFORMATION
FOR
ANNUAL BUDGET EXAMPLE

	VACUUM	PRESSURE/ GRAVITY	TREATMENT PLANT	TOTAL
Construction costs ($)	1,000,000	1,000,000	750,000	2,750,000
Number of customers	140	160	300	300

TABLE 31
ANNUAL BUDGET EXAMPLE

	VACUUM	PRESSURE/ GRAVITY	TREATMENT PLANT	TOTAL
O&M				
Labor	3,500	2,000	14,300	19,800
Clerical	460	540	0	1,000
Power	2,200	2,000	6,900	11,100
Utilities	750	500	750	2,000
Transportation	1,400	200	400	2,000
Supplies/maintenance	1,500	200	1,630	3,330
Miscellaneous expenses	1,000	500	2,000	3,500
Chemicals	0	0	1,200	1,200
Equipment R&R	1,600	3,100	2,200	6,900
Future service conn.	700	65	0	1,350
TOTAL O&M	13,130	9,670	29,380	52,180
Debt Service	16,655	16,655	11,710	45,010
TOTAL ANNUAL BUDGET	29,785	26,325	41,090	97,200

III. VACUUM SEWER SYSTEMS

H. SYSTEM MANAGEMENT CONSIDERATIONS

SECTION H

SYSTEM MANAGEMENT CONSIDERATIONS

NEEDS WORK

1. Homeowner Responsibilities

Factors such as topography, location of existing utilities, and construction constraints dictate the routing of a sewer. Many times this results in main line construction within private property. For service lines, the construction is almost always within private propeerty. For this reason easements are required from property owners for the installation and future maintenance of the system.

Generally, the user's responsibility begins at the vacuum pit stub-out. The length of stub-out is usually 6 to 10 feet. Shorter stub-out lengths are undesirable. They would require the homeowner to excavate closer to the valve pit to connect to it, possibly damaging the pit or disturbing the backfill/compaction around the pit in the process.

!!!

Most operating entities require the homeowner to replace the building sewer from the house foundation to the stub-out connection. The reason is simple. Vacuum sewers are not designed to handle extraneous water. By accepting old, possibly defective building sewers, the operating entity is taking a risk on operation and maintenance problems, particularly "waterlogging".

The building sewer is temporarily under vacuum during the valve's open cycle. For this reason the pipe material must be able to withstand those forces without collapsing. It is standard practice for 4-inch, Schedule 40, SDR 21, or SDR 26 PVC pipe to be used for this purpose. Fifteen hundred pound (1500-lb) crush-type pipe is not acceptable, nor is SDR 35 PVC.

The homeowner also is responsible for the installation of the 4" auxiliary vent. This vent is necessary for the proper operation of the valve. It should be located no closer than 20-feet to the valve pit. It is desirable for this vent to be located against a permanent structure, such as the house itself, a fence, or a wall.

There have been attempts by some engineers in the past to include this work as part of the construction project. This was found to be unworkable, as this required the complete knowledge of the homeowner's plumbing system prior to the project bid. Many times, the homeowner was unsure of the exact location of his building sewer. Contractor liability was increased since excavation near the foundation was required. This led to high unit bid

prices. Finally, installing a vent on the building sewer before the system was ready for operation did nothing more than vent the septic tank, which created odor problems. All of the work required by the homeowner is to be inspected by the operating entity prior to final connection. This ensures the proper and efficient operation of the system. Compliance with the Sewer Use Ordinance is the only remaining user responsibility.

2. Sewer Authority Responsibilities

Easement acquisition is the responsibility of the Sewer Authority, either directly, or through contract with a right-of way agent. In either case, the hydraulic limits of the system must be understood prior to making any changes that may be requested by the property owner. For this reason, some Authorities employ the services of the design engineer for this task.

The actual vacuum valve is not installed until the customer is ready to connect to the valve pit setting. It is common for the the contractor to install the valve pit/sump, including all of the necessary piping, during system construction The valve is then supplied to the Authority for their installation at a later date. In this manner, the Authority can systematically install the valves as each customer requests connection. Each valve is "timed-out" with the time setting being recorded for future reference. The time setting on the first few valves are typically changed once or twice after start-up as system hydraulics continually changes until all customers are connected. All valves are then finetuned to operate as a complete system.

ADD DISCUSSION ON VIDEO TAPING-SEE BOWNES SECTION!!

!!!!!!!!!!!!!!!!!!!!!!!!!!!!!!!!!!

Once all customers are connected, the Authority is focused on providing reliable, efficient service to their customers. To achieve this, the operating personnel must be capable, dependable, and knowledgeable. Of utmost importance is attitude. An operator that does not believe in the system will ultimately cause the system to operate below its potential, in terms of reliability and costs. Conversely, one with a good attitude uses creativity to get more out of the system than was originally planned.

To operate any system at a high level of efficiency requires a Sewer Use Ordinance. This document sets consistent rules for all users to follow. Included are material specifications for the building sewer, minimum slope requirements, and vent locations. Of extreme importance to the Authority is to limit use of the vacuum sewer to sanitary wastes only, as extraneous water will cause operational problems.

An active program for the identification of extraneous water sources should be developed. This may include smoke testing and dye testing. To identify and quantify sources of extraneous water, the Authority can take advantage of a integral feature of a vacuum system; the cycle counter. This device, when connected to the valve, will record the number of times the valve opens in a given period. Knowing that each cycle is approximately 11 gallons, the Authority can estimate, based on water consumption records, the number of cycles expected over that period. A count much in excess of the expected may be a sign of extraneous water. To quantify the amount, the number of cycles is multiplied by 11 gallons and compared to the water consumption. Listening to the auxiliary vent for sounds of running water when no flushing activity is taking place may also provide clues for sources of extraneous water.

The Authority also is responsible for future extensions of the system. This includes proper planning, design, and construction of such extensions. Finally, future connections to the existing system are made by the Authority in accordance with the provisions of the Sewer Use Ordinance.

3. Other Entities

During the planning, design and construction of sewer systems, there are many different entities involved. Two of these are regulatory agencies and the engineer. It is during these times that many decisions are made and details finalized. Often, these entities view the start-up of a system as their final involvement. While this attitude is understandable, it is not acceptable. Continuing involvement is needed to help a viable, cost-effective technology grow.

The engineer should spend a significant amount of time during the start-up of the system. Tests should be run, and problems simulated, to see if the system is operating as designed. Periodically, the operating records should be analyzed for budget sufficiency purposes. Problems and their solutions should be recorded. In short, the engineer should use the operating experience of the system to help develop improvements in future designs.

Likewise, regulatory agencies should follow up on the operation of a new system. Information on problems, including the cause and the remedies, should be gathered. Cost data should be obtained. This type of information can then be used for future projects.

It is this present lack of information that causes many engineers and regulatory agencies to shy away from a new technology. It has become easier to be conservative, and hence unduly critical, rather than to learn the details of a new technology, no matter how cost-effective.

V. DESIGN EXAMPLE

2. VACUUM SEWER SYSTEM

CHAPTER 5
SECTION 2

DESIGN EXAMPLE
VACUUM SEWERS

Reprinted from AIRVAC
Design Manual

Chapter 7

Design Example

Consider the vacuum sewer layout shown in figure 28. The location of the collection station, sewers and ~~AIRVAC®~~ valves have been selected in accordance with the requirements of Chapter 5 which are restated below:

SECTION D

Locate sewers to: Minimize lift
Minimize length
Where possible to equalize flows on each sewer.

~~Locate AIRVAC® valves to serve two or more homes per valve. (See Chapter 4)~~

For the design example each ~~AIRVAC®~~ valve is assumed to serve two homes and that the peak flow per home is 0.64 gpm or 1.28 gpm/~~AIRVAC®~~ valve installation.

?

To efficiently serve the area shown in figure 28, four main sewers will be required. Each of these main sewers is connected directly to the vacuum tank at the collection station. Sewers are not joined together into a bus main outside the station.

Division valves have been located to isolate areas of the sewer network for trouble-shooting purposes.

? New Fig #5

Profiles *(Fig. 29 and 30)* have been prepared for main #1 and its two branch sewers. The profiles for mains 2, 3, and 4 will be similar.

SECTION D

Profiles for main #1 follow the principals stated in ~~Chapter~~ 5 and figure ~~11~~.

Fig 7 CHAPTER I.C

Maximum length of 4" sewer - 2,800 ft.
80% pipe diameter drop or 0.2% fall between lifts; whichever is greater.
Where the ground profile falls greater than 0.2% in the flow direction, the sewer profile follows the ground.

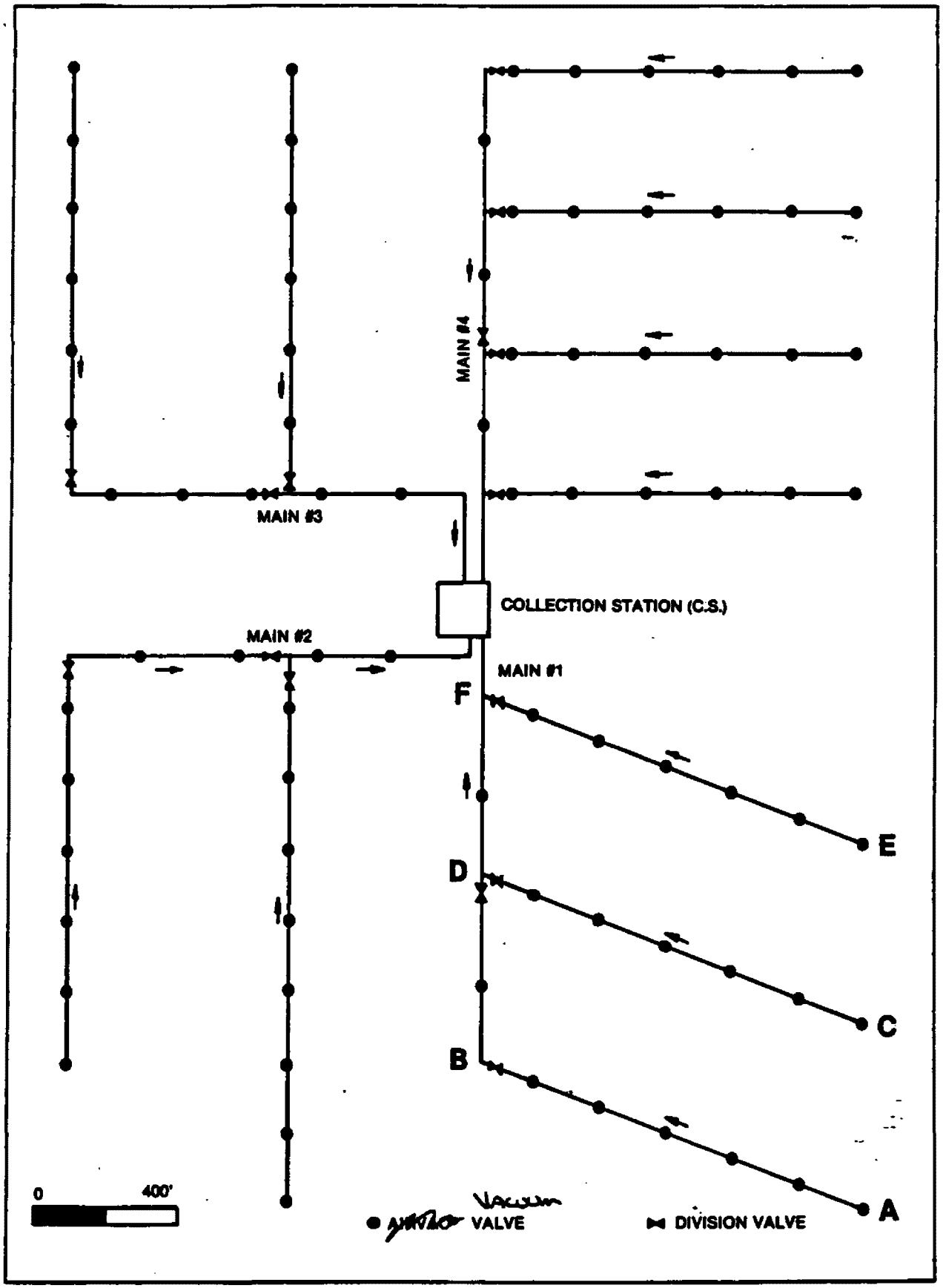

FIGURE 2 - DESIGN EXAMPLE

Location of ~~AIR VAC~~ VACUUM valves and branch sewer connections follow the principals of ~~Chapters 5 and~~ 9. SECTION D

Location of ~~AIR VAC~~ VACUUM valves and branch sewer connections and access points follow the principals of ~~Chapters 5 and 9~~ SECTION D

Prepare total line loss calculations from the sewer profiles (*Fig. 31*).

Procedure. Commence at point A. Calculate losses to point D. Calculate losses and flows from C to D. Determine the line with the greatest loss and carry forward, i.e. if the total line loss from A to D is greater than the total line loss from C to D, carry forward A to D. DO NOT ADD TOTAL LINE LOSSES WHERE BRANCH SEWERS JOIN THE MAIN. If the total line loss from C to D is greater than A to D then C-D-F becomes the main sewer for total line loss calculation purposes. Total the sewage flow from A-D and C-D. Calculate the total line losses from D to F and continue towards the collection station.

See figure 31 for calculation of line losses in main #1. Remember the static loss of profile changes of 12" or under is counted as half the change. (12" change 6" loss, etc.) NO!!

Using the same method total line loss, flows and pipe sizes can be calculated for mains 2, 3 and 4. Flows, pipe sizes and lengths for these mains have been estimated to enable figures 32 and 33 to be completed.

When all machinery calculations are complete, consult manufacturers literature to select suitable standard size pumps and tanks. Vacuum and sewage pump sizes should be selected to allow for additional house connections to be made without overloading.

NEW RULES

LIFT HEIGHT MINUS PIPE DIAMETER

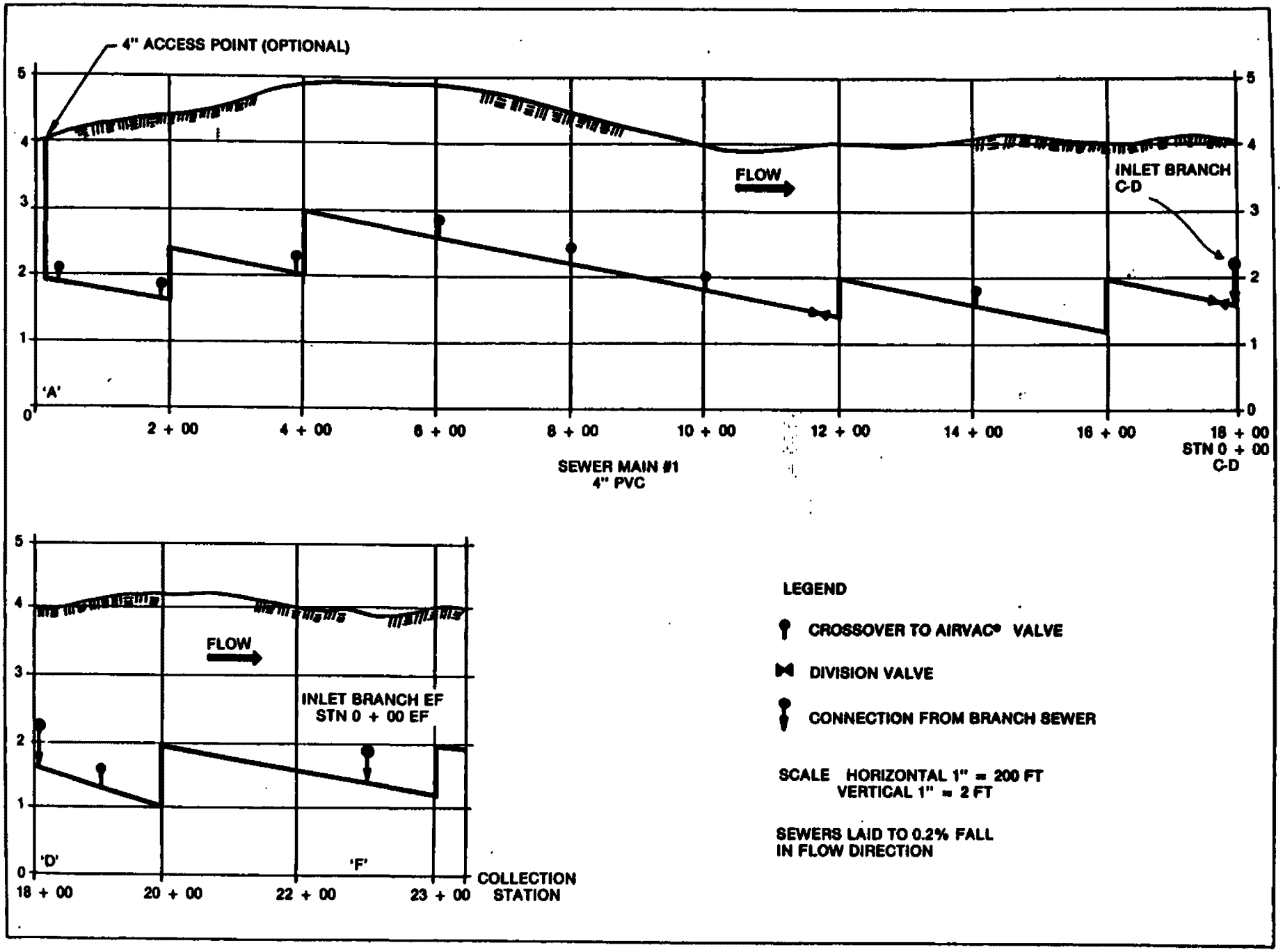

FIGURE 29 - DESIGN EXAMPLE PROFILES

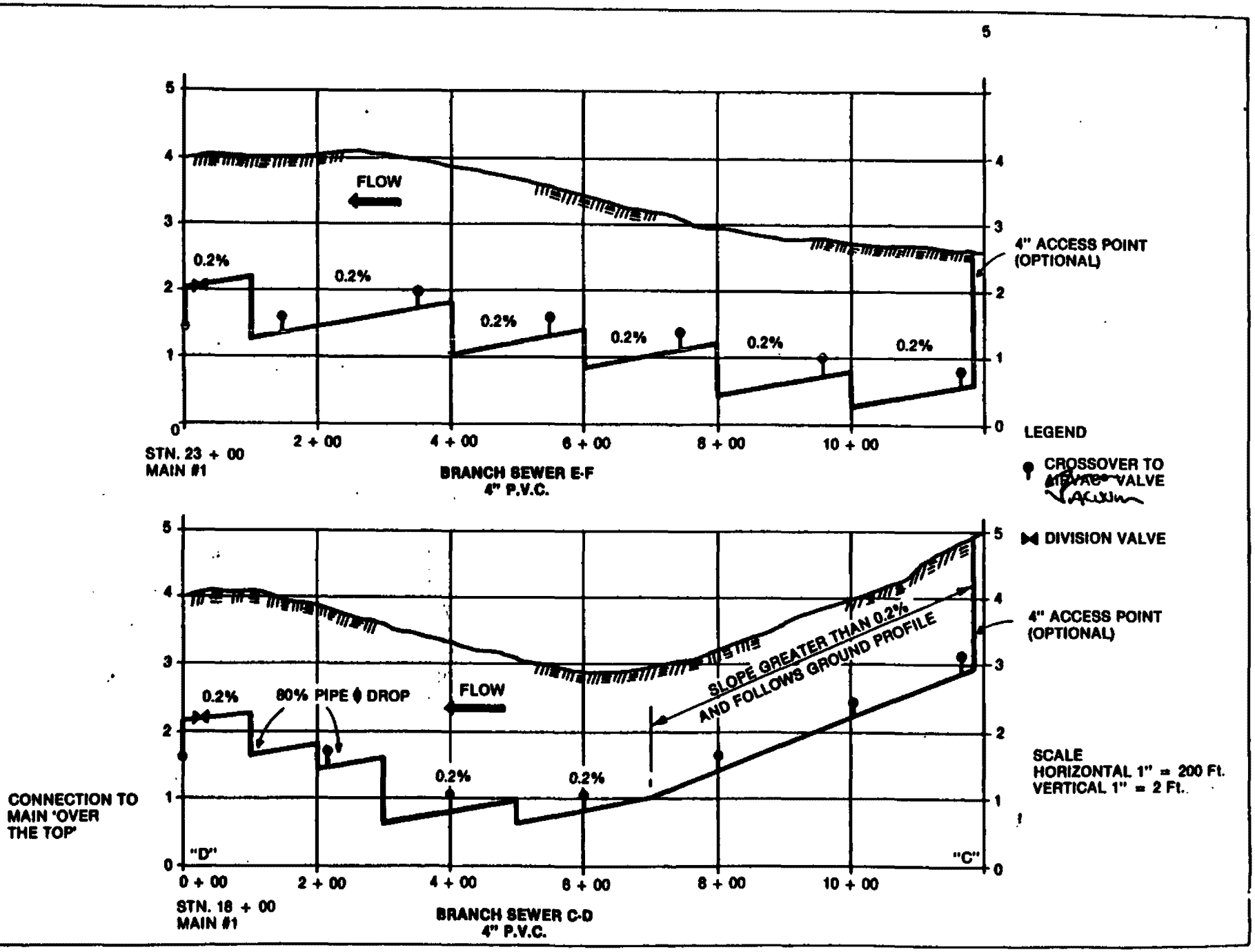

FIGURE 30 - DESIGN EXAMPLE PROFILES

AIRVAC®
Vacuum Sewerage System

PROJECT DESIGN EXAMPLE | PROJECT NUMBER _____ | STATION 1

LINE 1 | AIR/LIQUID 2:1 | MAX FLOW _____ | DATE MARCH 1986

STATION TO STATION	LINE LENGTH	Q MEAN	Q ACC'M	H_L/ 100'	HEAD LOSS LINE	STATIC LOSS Ft	TOTAL LOSS LINE Ft	ACC'M HEAD LOSS Ft.	PIPE SIZE 3"	PIPE SIZE 4"	PIPE SIZE 6"	NUMBER AIRVAC® VALVES
MAIN LINE @ A 0 - 2+00	200	SAY 2.00	2.56	.0011	.0022	.8/2 = .4000	.4022	.4022		200		2
2+00 - 4+00	200	3.00	3.84	.0022	.0044	½ .5000	.5044	.9066		200		1
4+00 - 8+00	400	5.00	6.40	.0058	.0232	—	.0232	.9298		400		2
8+00 - 12+00	400	7.00	7.68	.0107	.0428	.3000	.3428	1.2726		400		1
12+00 - 16+00	400	8.00	8.96	.0137	.0548	.4000	.4548	1.7274		400		1
16+00 - 18+00	200	9.00	8.96	.0170	.0340	—	.0340	1.7614		200		—
BRANCH SEWER C-D JOINS AT THIS POINT. CALCULATE C-D BEFORE CONTINUING WITH MAIN.												
12+00 - 7+00	500		3.84	DOWNGRADE NO LOSS						500		3
7+00 - 5+00	200	5	5.12	.0058	.0116	.2000	.2116	.2116		200		1
5+00 - 4+00	100	5	5.12	.0058	.0058	—	.0058	.2174		100		—
4+00 - 3+00	100	6	6.40	.0080	.0080	.5000	.5080	.7254		100		1
3+00 - 2+00	100	7	7.68	.0107	.0107	.2000	.2107	.9361		100		1
MAIN 2+00 - 0+00	200	8	7.68	.0137	.0274	.3000	.3274	1.2635		200		—
		THEREFORE LOSS IN BRANCH C-D IS LESS THAN MAIN AND IS IGNORED.										

FIGURE 31 - DESIGN EXAMPLE (SHEET 1)

REDO WITH NEW DIAGRAM

AIRVAC®
Vacuum Sewerage System

PROJECT DESIGN EXAMPLE

PROJECT NUMBER _____ STATION _____

LINE 1 AIR/LIQUID 2:1

MAX FLOW 25.6 gpm. DATE MARCH 1986

STATION TO STATION	LINE LENGTH	Q MEAN	Q ACC'M	H_L/ 100'	HEAD LOSS LINE	STATIC LOSS	TOTAL LOSS LINE	ACC'M HEAD LOSS	PIPE SIZE			NUMBER AIRVAC ® VALVES
									3"	4"	6"	
MAIN LINE AT STN 18+01			16.64					1.7614				
18+00 - 20+00	200	17	17.92	.0551	.1102	.5000	.6102	2.3716		200		1
20+00 - 23+00	300	18	17.92	.0612	.1836	—	.1836	2.5552		300		—
BRANCH SEWER EF JOINS MAIN AT THIS POINT.												
12+00 - 10+00	200	2	1.28	.0011	.0022	.3000	.3022	.3022		200		1
10+00 - 8+00	200	2	2.56	.0011	.0022	.4000	.4022	.7044		200		1
8+00 - 6+00	200	3	3.84	.0022	.0044	.3000	.3044	1.0088		200		1
6+00 - 4+00	200	5	5.12	.0058	.0116	.4000	.4116	1.4204		200		1
4+00 - 1+00	300	7	7.68	.0107	.0321	.5000	.5321	1.9525		300		2
1+00 - MAIN	100	8	7.68	.0137	.0137	—	.0137	1.9662		100		—
AGAIN HEAD LOSS IN BRANCH IS LESS THAN MAIN AND IS IGNORED.												
MAIN LINE AT STN. 23+01			25.6					2.5552				
23+00 - VAC STN	140	26.00	25.6	.121	.1694	.4000	.5694	3.1246		140		
TOTALS			25.6					3.1246	2400	2440		20

FIGURE [illegible] - DESIGN EXAMPLE (SHEET 2)

AIRVAC®
Vacuum Sewerage System

PROJECT DESIGN EXAMPLE

PROJECT NUMBER _____

STATION NUMBER 1

DATE MARCH 1986

LINE	3" PIPE	4" PIPE	6" PIPE	8" PIPE	PEAK FLOW	NUMBER CROSS-OVERS *	NUMBER AIRVAC* VALVES
1		4840	—	—	25.6	10	20
2		3825			23.04	9	18
3		3750			21.76	8	17
4		5850			34.56	14	27
TOTALS		18,265			104.96	41	82
CROSSOVERS 41 @ 40'	1640						
TOTAL 3" PIPE	1640						

*ASSUME 50% OF VALVES REQUIRE CROSSOVERS.

VOLUME OF PIPEWORK (BASED ON SDR 21 PVC PIPE)

Vp = 7.5 (.0547 x LENGTH 3" + .0904 x LENGTH 4" + .1959 x LENGTH 6" + .3321 x LENGTH 8")

Vp = 7.5 (90 + 1651 + — +)

Vp = 7.5 (1741) GALLONS

Vp = 13,057 GALLONS

⅔ Vp = 8705 GALLONS

FIGURE 32

Project DESIGN EXAMPLE

Station Number _____

AIRVAC®
Vacuum Sewerage System

Project Number _____

Date MARCH 1986

Peak Flow = Qmax = = 105 g.p.m.

Average Flow = Qa = $\frac{Qmax}{\text{Peak Factor}}$ = $\frac{Qmax}{}$ = 30 g.p.m.

Minimum Flow = Qmin = $\frac{Qa}{2}$ = 15 g.p.m.

Vacuum Pump Capacity Required =
(Insert A in Calculation For Qvp:)

Longest Line Length	A
0 - 3000'	5
3001' - 7000'	6
7001' - 10,000'	7
10,001' - 12,000	8
Over 12,001'	10

$Qvp = \frac{A \times Qmax}{7.5\ gal/ft^3}$ c.f.m.

$\frac{5 \times 105}{7.5\ gal/ft^3}$ c.f.m.

Qvp = 70 c.f.m.

Discharge Pump Capacity

Qdp = Qmax = 105 g.p.m.

Collection Tank Operating Volume
(for 15 min. cycle at Qmin)

Vo = 1.84 Qmax for 3.5 Peak Factor

Vo = 1.64 Qmax for 4.0 Peak Factor

$Vo = 15 \frac{Qmin}{Qdp} (Qdp - Qmin)$

Vo = 193

Total Volume Collection Tank

Vct = 3 Vo = 580 gal.

NOTE: MINIMUM Vct = 400 gal.

Vacuum Reservoir/Moisture
Removal Tank
(Recommended Volume Vrt = 400 gal.)

Vrt = 400 gal.

System Pump Down Time for Operating
Range of 16" to 20" Hg Vacuum

$t = (0.045 \frac{cfm\text{-}min.}{gal.}) \frac{(2/3\ Vp + (Vct - Vo) + Vrt)\ gal.}{Qvp\ cfm}$

t should be less than 6 mins. If over, increase Qvp to give 't' under 6 mins. If 't' is under 1 min. increase Vrt.

$t = 0.045 \left(\frac{8705 + (580 - 193) + 400}{70} \right)$

t = 6.10* mins.

Total Dynamic Head On Discharge Pump = Tdh

Tdh = Head Due to Vacuum + Static Head + Friction Loss

Tdh = 23 + _____ + _____ ft.

Tdh = _____ ft.

NPSH Calculation

havt = ha + Vmax = _____ + _____

NPSHA = havt + hs - hf - hvpa

NPSHA = _____ + _____ - _____ - _____

NPSHA = _____ ft.

OLD RULES

* IN THIS EXAMPLE TO GIVE A 't' UNDER 6 MINS. Qvp SHOULD BE INCREASED

NEW RULES

't' LESS THAN 3 MINUTES

FIGURE 33