United States
Environmental Protection
Agency

Office of Air Quality
Planning and Standards
Research Triangle Park, NC 27711

EPA-454/R-99-017A
June 1999

AIR

EPA

Final Report - Volume I of II

Iron and Steel Foundries Manual Emissions Testing of Cupola Baghouse at Waupaca Foundry in Tell City, Indiana

Office of Air Quality
Clean Air
OAQPS
Planning and Standards

FINAL REPORT

IRON AND STEEL FOUNDRIES
MANUAL EMISSION TESTING
CUPOLA BAGHOUSE
WAUPACA FOUNDRY, TELL CITY, INDIANA

VOLUME I OF II
REPORT TEXT AND APPENDICES A & B

EPA Contract No. 68D70069
Work Assignment No. 2-08

Prepared for:

Mr. Michael K. Ciolek (MD-19)
Work Assignment Manager
SMAG, EMC, OAQPS
U.S. Environmental Protection Agency
Research Triangle Park, NC 27711

June 1999
p:\i528\finrpt\waupaca\report

Submitted by

PACIFIC ENVIRONMENTAL SERVICES, INC.
5001 S. Miami Blvd., Suite 300
Post Office Box 12077
Research Triangle Park, NC 27709-2077
(919) 941-0333
FAX (919) 941-0234

DISCLAIMER

This document was prepared by Pacific Environmental Services, Inc. (PES) under EPA Contract No. 68D70069, Work Assignment No. 2-08. This document has been reviewed following PES' internal quality assurance procedures and has been approved for distribution. The contents of this document do not necessarily reflect the views and policies of the U.S. EPA. Mention of trade names does not constitute endorsement by the EPA or PES.

TABLE OF CONTENTS

VOLUME 1 Page

1.0 INTRODUCTION 1-1

2.0 SUMMARY OF TEST RESULTS 2-1

2.1 EMISSIONS TEST LOG 2-1
2.2 PARTICULATE MATTER AND METALS 2-1
2.3 DIOXINS AND FURANS 2-7
2.4 SEMIVOLATILE ORGANIC HAZARDOUS AIR POLLUTANTS 2-14

3.0 PROCESS DESCRIPTION 3-1

3.1 INTRODUCTION 3-1
3.2 PROCESS DESCRIPTION 3-1
3.3 SUMMARY OF PROCESS OPERATING DATA COLLECTED DURING SOURCE TEST 3-5

4.0 SAMPLING LOCATIONS 4-1

4.1 CUPOLA BAGHOUSE INLET 4-1
4.2 CUPOLA BAGHOUSE OUTLET 4-1

5.0 SAMPLING AND ANALYTICAL PROCEDURES 5-1

5.1 LOCATION OF MEASUREMENT SITES AND SAMPLE/VELOCITY TRAVERSE POINTS 5-1
5.2 DETERMINATION OF STACK GAS VOLUMETRIC FLOW RATE 5-1
5.3 DETERMINATION OF DRY MOLECULAR WEIGHT AND EMISSION CORRECTION FACTORS 5-1
5.4 DETERMINATION OF STACK GAS MOISTURE CONTENT 5-3
5.5 DETERMINATION OF PARTICULATE MATTER AND METALS 5-3
5.6 DETERMINATION OF DIOXINS AND FURANS 5-7
5.7 DETERMINATION OF SEMIVOLATILE ORGANIC HAZARDOUS AIR POLLUTANTS (SVOHAPS) 5-7

TABLE OF CONTENTS (Concluded)

6.0 QUALITY ASSURANCE/QUALITY CONTROL (QA/QC) 6-1

6.1 CALIBRATION OF APPARATUS 6-1
6.2 ON-SITE MEASUREMENTS 6-4
6.3 LABORATORY ANALYSIS 6-6

APPENDIX A - RAW FIELD DATA
APPENDIX B - ANALYTICAL DATA - PARTICULATE MATTER AND METALS

VOLUME 2

APPENDIX C - ANALYTICAL DATA - DIOXINS/FURANS AND SEMI-VOLATILE ORGANIC HAZARDOUS AIR POLLUTANTS
APPENDIX D - CALCULATIONS
APPENDIX E - QA/QC DATA
APPENDIX F - PARTICIPANTS

LIST OF TABLES

VOLUME 1 Page

Table 2.1 Emissions Test Log, The Waupaca Foundry - Tell City, Indiana 2-2
Table 2.2 Particulate/Metals Emissions Sampling and Flue Gas Parameters, Cupola Baghouse Inlet, The Waupaca Foundry - Tell City, Indiana 2-3
Table 2.3 Particulate Matter Concentrations and Emission Rates, Cupola Baghouse Inlet, The Waupaca Foundry - Tell City, Indiana 2-4
Table 2.4 Metals Concentrations and Emission Rates, Cupola Baghouse Inlet, The Waupaca Foundry - Tell City, Indiana 2-5
Table 2.5 Particulate/Metals Emissions Sampling and Exhaust Gas Parameters, Cupola Baghouse Outlet, The Waupaca Foundry - Tell City, Indiana 2-8
Table 2.6 Particulate Matter Concentrations and Emission Rates, Cupola Baghouse Outlet, The Waupaca Foundry - Tell City, Indiana 2-9
Table 2.7 Exhaust Gas Metals Concentrations and Emission Rates, Cupola Baghouse Outlet, The Waupaca Foundry - Tell City, Indiana 2-10
Table 2.8 Particulate Matter and Metals Removal Efficiencies, Cupola Baghouse, The Waupaca Foundry - Tell City, Indiana 2-12
Table 2.9 PCDDs/PCDFs Emissions Sampling and Exhaust Gas Parameters Cupola Baghouse Outlet, The Waupaca Foundry - Tell City, Indiana 2-13
Table 2.10 PCDDs/PCDFs Exhaust Gas Concentrations and Emission Rates, Cupola Baghouse Outlet, The Waupaca Foundry - Tell City, Indiana 2-15
Table 2.11 PCDDs/PCDFs Exhaust Gas Concentrations and 2378 Toxic Equivalent Stack Gas Concentrations Adjusted to 7 Percent Oxygen, Cupola Baghouse Outlet, The Waupaca Foundry - Tell City, Indiana 2-16
Table 2.12 SVOHAPs Emissions Sampling and Exhaust Gas Parameters Cupola Baghouse Outlet, The Waupaca Foundry - Tell City, Indiana 2-17
Table 2.13 SVOHAPs Exhaust Gas Concentrations and Emission Rates, Cupola Baghouse Outlet, The Waupaca Foundry - Tell City, Indiana 2-19
Table 2.14 SOVHAPs In-Stack Detection Limits (PPBVD), Cupola Baghouse Outlet, The Waupaca Foundry - Tell City, Indiana 2-26

Table 3.1 Typical Cupola Charge Materials 3-4
Table 3.2 Summary of Cupola Charging During The Test Days 3-6
Table 3.3 Process Data During The Days of Cupola Testing 3-8
Table 3.4 Periods When Cupola Was "On Relief" During Testing 3-10
Table 3.5 Process Iron Chemistry at Cupola 3-11

LIST OF TABLES (Concluded)

VOLUME 1 Page

Table 5.1 Sources, Test Parameters, and Test Methods Summary, The Waupaca Foundry - Tell City, Indiana 5-2

Table 6.1 Summary of Temperature Sensor Calibration Data 6-2
Table 6.2 Summary of Pitot Tube Dimensional Data 6-3
Table 6.3 Summary of Dry Gas Meter and Orifice Calibration Data 6-5
Table 6.4 Summary of EPA Methods 23 and 29 and SW-846 Method 0010 Field Sampling QA/QC Data 6-9
Table 6.5 Summary of EPA Method 29 Analysis QC Data, Lab Control Spikes 6-10
Table 6.6 Summary of EPA Method 29 Analysis QC Data, Matrix Spikes (Post Digestion) 6-11
Table 6.7 Summary of EPA Method 29 Analysis QC Data, Duplicate Analyses 6-12
Table 6.8 Summary of EPA Method 29 Analysis QC Data, Serial Dilution 6-14
Table 6.9 Summary of EPA Method 29 Analysis QC Data, Method Blanks Results . 6-16
Table 6.10 Summary of EPA Method 29 Analysis QC Data, Field Blanks Results . . . 6-17
Table 6.11 Summary of EPA Method 29 Analysis QC Data, Mercury Summary Report - Lab Control Spikes 6-18
Table 6.12 Summary of EPA Method 29 Analysis QC Data, Mercury Summary Report - Matrix Spikes (Pre-Digestion) 6-19
Table 6.13 Summary of EPA Method 29 Analysis QC Data, Mercury Summary Report - Method Blank 6-20
Table 6.14 Summary of EPA Method 29 Analysis QC Data, Mercury Summary Report - Field and Reagent Blanks 6-21
Table 6.15 Summary of EPA Method 23 Standards Recovery Efficiencies 6-22
Table 6.16 Summary of SW-846 Method 0010 Field and Laboratory Blanks Results 6-23
Table 6.17 Summary of SW-846 Method 0010 Surrogate Recovery Results 6-24

LIST OF FIGURES

VOLUME 1 Page

Figure 1.1 Air Flow Schematic and Sampling Locations at The Waupaca Foundry - Tell City, Indiana 1-3
Figure 1.2 Key Personnel and Responsibility for Testing Program at The Waupaca Foundry - Tell City, Indiana, ... 1-4

Figure 3.1 Simplified Schematic of Cupola Gas Handling System 3-2
Figure 3.2 Hourly Melting Rates During Cupola Testing 3-7
Figure 3.3 Blast Air Flow Rate Through Cupola 3-9

Figure 4.1 Cupola Baghouse Inlet Sampling Location, Waupaca Foundry - Tell City, Indiana 4-2
Figure 4.2 Cupola Baghouse Inlet Traverse Point Location, The Waupaca Foundry - Tell City, Indiana 4-3
Figure 4.3 Cupola Baghouse Outlet Sampling Location, Waupaca Foundry - Tell City, Indiana 4-4
Figure 4.4 Cupola Baghouse Outlet Traverse Point Locations, The Waupaca Foundry - Tell City, Indiana 4-5

Figure 5.1 Sampling Train Schematic for EPA Method 29 5-4
Figure 5.2 EPA Method 29 Recovery Scheme 5-5
Figure 5.3 Sample Preparation and Analysis Scheme for EPA Method 29 5-6
Figure 5.4 Sampling Train Schematic for EPA Method 23 and SW-846 Method 0010 5-8

1.0 INTRODUCTION

The U.S. Environmental Protection Agency (EPA) Emission Standards Division (ESD) is investigating iron and steel foundries to identify and quantify hazardous air pollutants (HAPs) emitted from cupolas; electric arc furnaces; and pouring, cooling and shakedown operations of sand mold casting processes. ESD had requested that EPA's Emissions, Monitoring and Analysis Division (EMAD) conduct the required testing. EMAD had issued a work assignment to Pacific Environmental Services, Inc. (PES) to plan and conduct the air emissions test program to gather emissions data as specified in the ESD test request. The planning and testing phase of the program was conducted through EPA Contract No. 68D20162, Work Assignment No. 4-14. This test report was completed under EPA Contract No. 68D70069, Work Assignment No. 2-08.

The EPA's ESD is investigating two types of control devices (baghouses and scrubbers) as potential Maximum Achievable Control Technology (MACT) floor technology for cupolas. Two facilities were selected by ESD as host facilities for the testing program. One uses a baghouse for control of cupola emissions, and the other uses a wet scrubber for the control of cupola emissions. The Waupaca Foundry, located in Tell City, Indiana, uses a baghouse and was the subject of this test program. Results of tests on a wet scrubber at the second facility were presented under a separate report.

Testing at the Waupaca Foundry was conducted by two EMAD contractors to address the following ESD requirements: 1) characterize HAP emissions from cupolas that are controlled by baghouses; 2) characterize uncontrolled HAP emissions from pouring, cooling, and shakeout (PCS) processes; 3) determine baghouse performance in controlling HAP emissions from cupolas; and 4) identify surrogates for estimating HAP emissions from the subject foundry processes. PES conducted testing for requirements (1) and (3). Data gathering for requirements (2) and (4) was conducted by the other contractor and is not a part of this document.

The Waupaca Foundry was selected by the ESD as the host facility for this project. This facility is a large job shop foundry that conducts melting and casting operations. EPA deemed this facility to be representative of a large segment of the sand casting foundry industry. It operates a relatively large cupola (50 standard tons per hour melting capacity) that is controlled by a negative pressure baghouse. Ducts were available to measure emissions from pouring, cooling, and shakeout sections of the casting lines. The new facility recently began production and the modern design of the cupola baghouse was expected to be as effective as any used in this type of application. Tests were conducted at the cupola baghouse inlet and outlet. The sampling locations at the Waupaca Foundry are shown in Figure 1.1 PES performed particulate matter (PM) and metal HAPs testing at the cupola baghouse inlet

and outlet and organic HAPs testing at the cupola baghouse outlet. The organic HAPs consisted of polychlorinated dibenzo-*p*-dioxins and polychlorinated dibenzofurans (PCDDs/PCDFs) and semi-volatile organic hazardous air pollutants (SVOHAPs).

PES used three subcontractors for this effort: Deeco, Inc. (DEECO); Triangle Laboratories, Inc. (TLI), and Atlantic Technical Services, Inc. (ATS). DEECO provided on-site sampling support for the determination of PM and metal HAPs; TLI provided analytical support for the analysis of HAPs; and ATS provided support for preparation of the site-specific test plan (SSTP), quality assurance project plan (QAPP), and report documentation..

The field testing program organization and major lines of communication are presented in Figure 1.2. The PES Project Manager communicated directly with the EPA Work Assignment Manager and coordinated all of the on-site testing activities.

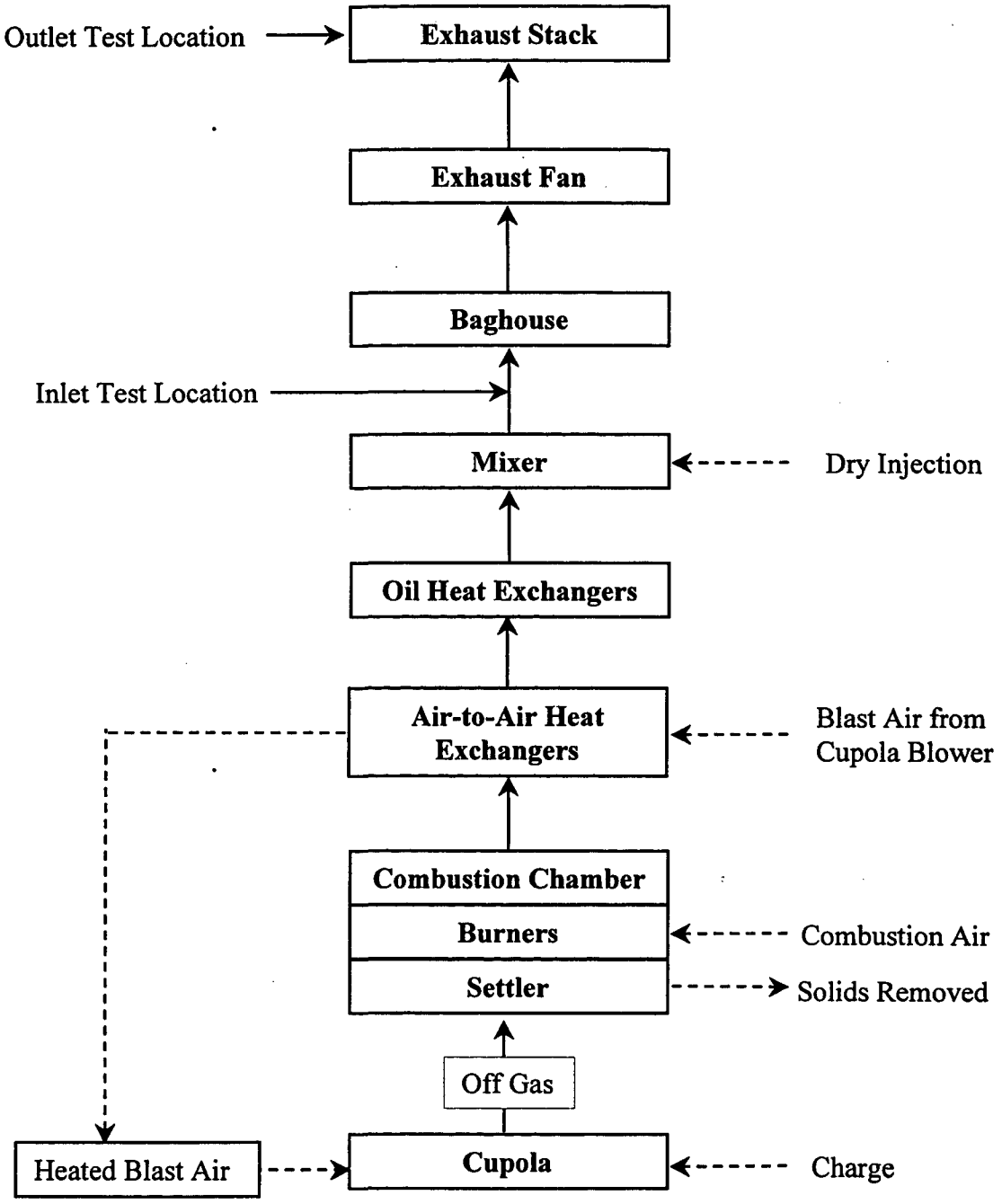

Figure 1.1 Air Flow Schematic and Sampling Locations at The Waupaca Foundry - Tell City, Indiana

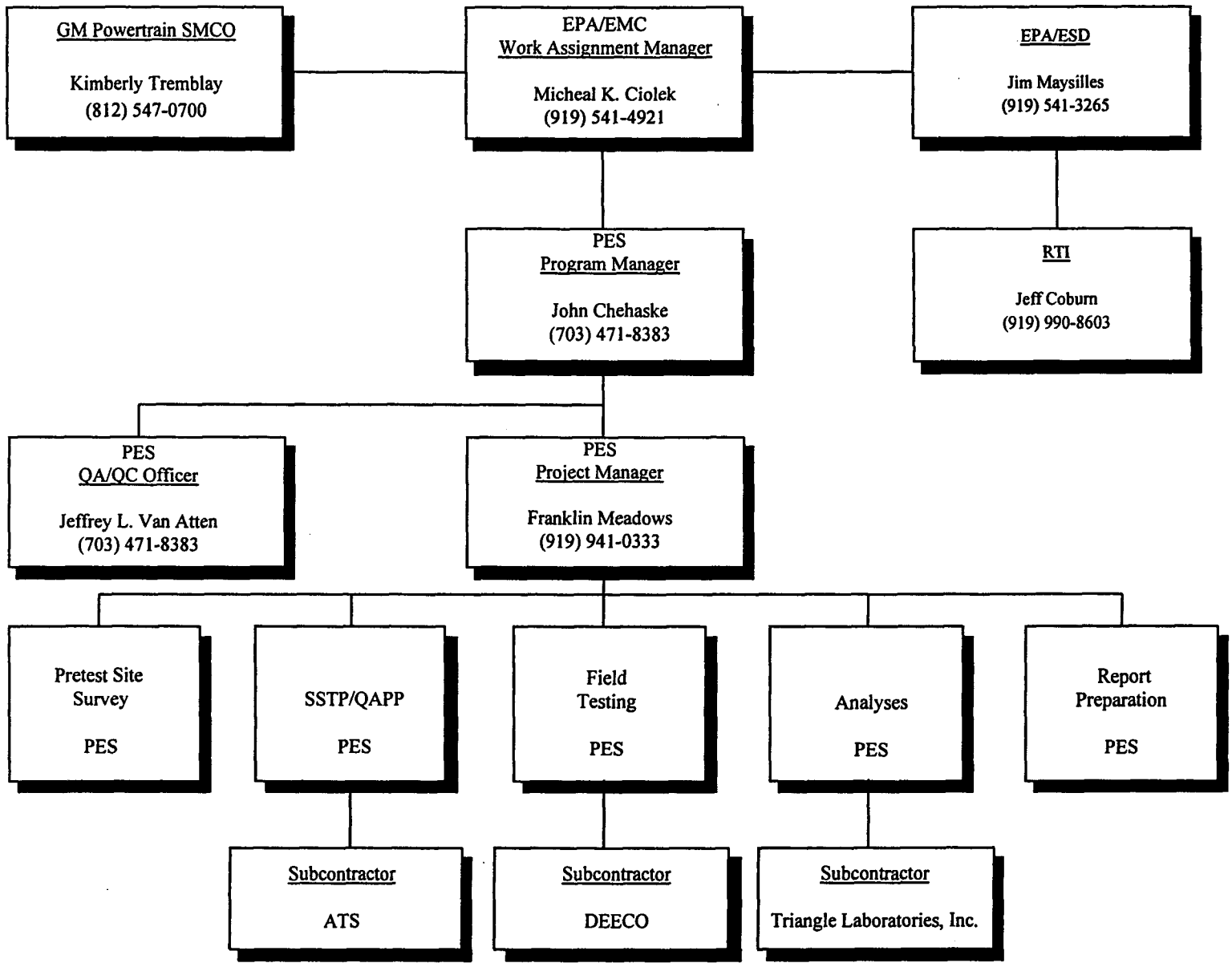

Figure 1.2 Key Personnel and Responsibility for Testing Program at the Waupaca Foundry - Tell City, Indiana

2.0 SUMMARY OF RESULTS

This section provides test results summaries obtained from the Waupaca Foundry testing. Included are results of the tests conducted for particulate matter/metals at the cupola baghouse inlet and outlet, and SVOHAPs and PCDDs/PCDFs testing at the cupola baghouse outlet. Although we have included averages, there were differences in production rates and operating conditions.

2.1 EMISSIONS TEST LOG

Sampling at the cupola baghouse was conducted on September 9 and 10, 1997. Table 2.1 summarizes the emissions test log. Presented are the run numbers, test dates, pollutants, run times, and downtime for filter and port changes.

2.2 PARTICULATE MATTER AND METALS

2.2.1 Baghouse Inlet

Table 2.2 summarizes the particulate matter and metals emissions sampling and flue gas parameters at the baghouse inlet. The total sampling time for each test run was 240 minutes. The average sample volume was 105.362 dry standard cubic feet (dscf) or 2.984 dry standard cubic meters (dscm). The average flue gas temperature was 293°F. The flue gas contained 11.6 percent (%) carbon dioxide (CO_2), 9.7% oxygen (O_2), and 2.6% moisture. The average flue gas volumetric flow rate was 52,700 actual cubic feet per minute (acfm) or 34,500 dry standard cubic feet per minute (dscfm) or 976 dry standard cubic meters per minute (dscmm).

Table 2.3 summarizes the flue gas particulate matter concentrations and emission rates at the cupola baghouse inlet. The average concentration was 1.04 grains per dry standard cubic foot (gr/dscf) or 2.39 grams per dry standard cubic meter (g/dscm). The concentrations are also shown adjusted to 7% O_2. The average mass emission rate was 323 pounds per hour (lb/hr) or 146 kilograms per hour (kg/hr).

Table 2.4 summarizes the flue gas metals concentrations and emission rates. The blank correction procedures of EPA Method 29 were used to correct the samples for the back half reagent blank only, because the analytical results for the front half reagent blank were considered inappropriate for blank correction.. All of the target metals were found to be present in all three samples. Average concentrations ranged from 2.89 micrograms per dry standard cubic meter (µg/dscm) for beryllium to 247,458 µg/dscm for zinc.

TABLE 2.1

EMISSIONS TEST LOG
THE WAUPACA FOUNDRY - TELL CITY, INDIANA

Run No.	Date	Pollutant	Run Time	Downtime, Minutes
Baghouse Inlet				
I-M29-1	09/09/97	PM/Metals	1025-1501	36
I-M29-2	09/10/97	PM/Metals	0758-1233	35
I-M29-3	09/10/97	PM/Metals	1515-2021	66
Baghouse Outlet				
O-M29-1	09/09/97	PM/Metals	1029-1503	34
BO-23-1	09/09/97	PCDDs/PCDFs	1029-1501	32
BO-0010-1	09/09/97	SVOHAPs	1029-1503	34
O-M29-2	09/10/97	PM/Metals	0810-1315	65
BO-23-2	09/10/97	PCDDs/PCDFs	0810-1315	65
BO-0010-2	09/10/97	SVOHAPs	0810-1315	65
O-M29-3	09/10/97	PM/Metals	1520-2021	61
BO-23-3	09/10/97	PCDDs/PCDFs	1520-2008	48
BO-0010-3	09/10/97	SVOHAPs	1520-2008	48

TABLE 2.2

PARTICULATE/METALS EMISSIONS SAMPLING AND FLUE GAS PARAMETERS - CUPOLA BAGHOUSE INLET THE WAUPACA FOUNDRY - TELL CITY, INDIANA

Run No.	I-M29-1	I-M29-2	I-M29-3	Average
Date	9/9/97	9/10/97	9/10/97	
Total Sampling Time, min	240.5	240	240	
Average Sampling Rate, dscfm [a]	0.342	0.481	0.493	0.439
Sample Volume:				
dscf [b]	82.208	115.471	118.408	105.362
dscm [c]	2.328	3.270	3.353	2.984
Average Flue Gas Temp., °F	275	301	302	293
O_2 Concentration, % by Volume	10.9	9.5	8.8	9.7
CO_2 Concentration, % by Volume	10.8	11.6	12.4	11.6
Moisture, % by Volume	2.5	2.8	2.4	2.6
Flue Gas Volumetric Flow Rate:				
acfm [d]	39,900	58,900	59,300	52,700
dscfm [a]	26,800	38,200	38,500	34,500
dscmm [e]	759	1,080	1,090	976
Isokinetic Sampling Ratio, %	104.0	102.7	106.5	104.4

[a] Dry standard cubic feet per minute at 68° F (20° C) and 1 atm.

[b] Dry standard cubic feet at 68° F (20° C) and 1 atm.

[c] Dry standard cubic meters at 68° F (20° C) and 1 atm.

[d] Actual cubic feet per minute at exhaust gas conditions.

[e] Dry standard cubic meters per minute at 68° F (20° C) and 1 atm.

TABLE 2.3

PARTICULATE MATTER CONCENTRATIONS AND EMISSION RATES
CUPOLA BAGHOUSE INLET
THE WAUPACA FOUNDRY - TELL CITY, INDIANA

Run No.	I-M29-1	I-M29-2	I-M29-3	Average
Date	9/9/97	9/10/97	9/10/97	
Clock Time, 24-hr clock	1025-1501	0758-1233	1515-2021	
Concentration:				
gr/dscf [a]	0.622	1.44	1.07	1.04
gr/dscf @ 7% O_2 [b]	0.863	1.75	1.22	1.28
g/dscm [c]	1.42	3.30	2.45	2.39
g/dscm @ 7% O_2 [d]	1.97	4.01	2.80	2.93
Emission Rate:				
lb/hr [e]	143	472	354	323
kg/hr [f]	64.8	214	160	146

[a] Grains per dry standard cubic foot at 68° F (20° C) and 1 atm.

[b] Grains per dry standard cubic foot at 68° F (20° C) and 1 atm adjusted to 7 percent O_2.

[a] Grams per dry standard cubic meter at 68° F (20° C) and 1 atm.

[b] Grams per dry standard cubic meter at 68° F (20° C) and 1 atm adjusted to 7 percent O_2.

[c] Pounds per hour.

[f] Kilograms per hour.

TABLE 2.4

METALS CONCENTRATIONS AND EMISSION RATES
CUPOLA BAGHOUSE INLET
THE WAUPACA FOUNDRY - TELL CITY, INDIANA

Run No.	I-M29-1	I-M29-2	I-M29-3	Average
Date	9/9/97	9/10/97	9/10/97	
Clock Time, 24-hr clock	1025-1501	0758-1233	1515-2021	
Antimony (Sb)				
µg/dscm [a]	376	428	385	396
µg/dscm @ 7% O_2 [b]	521	520	440	494
lb/hr [c]	0.0377	0.0612	0.0555	0.0515
Arsenic (As)				
µg/dscm [a]	82.5	76.2	93.6	84.1
µg/dscm @ 7% O_2 [b]	114	92.4	107	105
lb/hr [c]	0.00828	0.0109	0.0135	0.0109
Barium (Ba)				
µg/dscm [a]	623	878	746	749
µg/dscm @ 7% O_2 [b]	864	1,066	853	928
lb/hr [c]	0.0625	0.126	0.108	0.0986
Beryllium (Be)				
µg/dscm [a]	1.28	4.68	2.72	2.89
µg/dscm @ 7% O_2 [b]	1.78	5.68	3.11	3.52
lb/hr [c]	0.000128	0.000669	0.000392	0.000397
Cadmium (Cd)				
µg/dscm [a]	606	1,159	898	888
µg/dscm @ 7% O_2 [b]	840	1,407	1,028	1,092
lb/hr [c]	0.0608	0.166	0.130	0.119
Chromium (Cr)				
µg/dscm [a]	546	750	609	635
µg/dscm @ 7% O_2 [b]	758	910	696	788
lb/hr [c]	0.0548	0.107	0.0879	0.0833
Colbalt (Co)				
µg/dscm [a]	14.7	13.3	14.1	14.0
µg/dscm @ 7% O_2 [b]	20.4	16.2	16.1	17.6
lb/hr [c]	0.00147	0.00190	0.00204	0.00180
Lead (Pb)				
µg/dscm [a]	34,969	61,200	44,131	46,767
µg/dscm @ 7% O_2 [b]	48,509	74,296	50,487	57,764
lb/hr [c]	3.51	8.75	6.37	6.21

TABLE 2.4 (Concluded)

METALS CONCENTRATIONS AND EMISSION RATES
CUPOLA BAGHOUSE INLET
THE WAUPACA FOUNDRY - TELL CITY, INDIANA

Run No.	I-M29-1	I-M29-2	I-M29-3	Average
Manganese (Mn)				
µg/dscm [a]	36,557	64,105	49,506	50,056
µg/dscm @ 7% O_2 [b]	50,713	77,822	56,636	61,724
lb/hr [c]	3.67	9.16	7.15	6.66
Mercury (Hg)				
µg/dscm [a]	20.5	57.1	17.7	31.8
µg/dscm @ 7% O_2 [b]	28.4	69.3	20.2	39.3
lb/hr [c]	0.00206	0.00816	0.00255	0.00426
Nickel (Ni)				
µg/dscm [a]	136	138	149	141
µg/dscm @ 7% O_2 [b]	189	167	171	176
lb/hr [c]	0.0137	0.0197	0.0215	0.0183
Phosphorus (P)				
µg/dscm [a]	801	843	18,258	6,634
µg/dscm @ 7% O_2 [b]	1,111	1,023	20,888	7,674
lb/hr [c]	0.0804	0.120	2.64	0.945
Selenium (Se)				
µg/dscm [a]	31.4	39.5	34.6	35.2
µg/dscm @ 7% O_2 [b]	43.6	47.9	39.6	43.7
lb/hr [c]	0.00315	0.00564	0.00499	0.00460
Silver (Ag)				
µg/dscm [a]	6.02	16.9	5.94	9.63
µg/dscm @ 7% O_2 [b]	8.36	20.6	6.79	11.9
lb/hr [c]	0.000605	0.00242	0.000857	0.00129
Thallium (Tl)				
µg/dscm [a]	31.3	51.4	39.2	40.6
µg/dscm @ 7% O_2 [b]	43.4	62.4	44.8	50.2
lb/hr [c]	0.00314	0.00735	0.00565	0.00538
Zinc (Zn)				
µg/dscm [a]	168,832	342,274	231,268	247,458
µg/dscm @ 7% O_2 [b]	234,209	415,511	264,578	304,766
lb/hr [c]	16.9	48.9	33.4	33.1

[a] Micrograms per dry standard cubic meter at 68° F (20° C) and 1 atm.

[b] Micrograms per dry standard cubic meter at 68° F (20° C) and 1 atm, adjusted to 7% O_2.

[c] Pounds per hour.

2.2.2 Baghouse Outlet

Table 2.5 summarizes the particulate matter and trace metals emissions sampling and exhaust gas parameters at the baghouse outlet. The total sampling time for each test run was 240 minutes. The average sample volume was 120.781 dscf or 3.420 dscm. The average exhaust gas temperature was 246°F. The exhaust gas contained 9.6 % CO_2, 11.6% O_2, and 3.6 % moisture. The average exhaust gas volumetric flow rate was 60,900 acfm or 43,400 dscfm or 1,230 dscmm.

Table 2.6 summarizes the exhaust gas particulate matter concentrations and emission rates at the baghouse outlet. The average concentration was 0.00124 gr/dscf or 0.00283 g/dscm. The concentrations are also shown adjusted to 7% O_2. The average mass emission rate was 0.393 lb/hr or 0.178 kg/hr. The results presented for run O-M29-2 use a negative filter catch weight. Both the filter and acetone rinse fractions were low and at the limit of detection. There are no known reasons for the negative result. If a zero had been used, the mass emission rate for the run would be 0.0897 lb/hr.

Table 2.7 summarizes the exhaust gas metals concentrations and emission rates. The blank correction procedures of EPA Method 29 were used to correct the samples for the back half reagent blank only, because the analytical results for the front half reagent blank were considered inappropriate for blank correction. All of the target metals, except beryllium, cobalt, and thallium, were found to be present in all three samples. Metals that were not detected in a sample have "ND" in place of any emissions calculations and were not included in the total metals sum. Average concentrations ranged from 0.244 μg/dscm for silver to 115 μg/dscm for zinc.

2.2.3 Baghouse Performance

Table 2.8 summarizes the performance of the baghouse in controlling PM and total HAP metals emissions. The removal efficiencies for PM and total HAP metals are based on the inlet and outlet mass emission rates. The average removal efficiency for PM and total HAP metals was 99.79% and 99.88%, respectively.

2.3 DIOXINS AND FURANS

Table 2.9 summarizes the PCDDs/PCDFs emissions sampling and exhaust gas parameters at the baghouse outlet. The total sampling time for each run was 240 minutes. The average sample volume was 145.249 dscf or 4.113 dscm. The average exhaust gas temperature was 247°F. The flue gas contained 9.6% CO_2, 11.6% O_2, and 2.8% moisture. The average exhaust gas volumetric flow rate was 62,600 acfm or 44,800 dscfm or 1,270 dscmm.

The EPA Method 23 sample extracts were first analyzed using a DB-5 capillary column to determine the concentration of each isomer of PCDDs and PCDFs (tetra- through octa-). Tetra-chlorinated dibenzofurans were detected in this analysis; therefore,

TABLE 2.5

PARTICULATE/METALS EMISSIONS SAMPLING AND EXHAUST GAS PARAMETERS - CUPOLA BAGHOUSE OUTLET THE WAUPACA FOUNDRY - TELL CITY, INDIANA

Run No.	O-M29-1	O-M29-2	O-M29-3	Average
Date	9/9/97	9/10/97	9/10/97	
Total Sampling Time, min	240	240	240	
Average Sampling Rate, dscfm [a]	0.378	0.580	0.552	0.503
Sample Volume:				
dscf [b]	90.633	139.162	132.547	120.781
dscm [c]	2.566	3.941	3.753	3.420
Average Exhaust Gas Temp., °F	231	253	254	246
O_2 Concentration, % by Volume	12.7	11.0	11.0	11.6
CO_2 Concentration, % by Volume	8.8	10.1	10.0	9.6
Moisture, % by Volume	5.5	2.6	2.8	3.6
Exhaust Gas Volumetric Flow Rate:				
acfm [d]	45,000	69,600	68,200	60,900
dscfm [a]	32,100	49,700	48,500	43,400
dscmm [e]	908	1,410	1,370	1,230
Isokinetic Sampling Ratio, %	103.1	102.2	99.7	101.7

[a] Dry standard cubic feet per minute at 68° F (20° C) and 1 atm.

[b] Dry standard cubic feet at 68° F (20° C) and 1 atm.

[c] Dry standard cubic meters at 68° F (20° C) and 1 atm.

[d] Actual cubic feet per minute at exhaust gas conditions.

[e] Dry standard cubic meters per minute at 68° F (20° C) and 1 atm.

TABLE 2.6

PARTICULATE MATTER CONCENTRATIONS AND EMISSION RATES
CUPOLA BAGHOUSE OUTLET
THE WAUPACA FOUNDRY - TELL CITY, INDIANA

Run No.	O-M29-1	O-M29-2	O-M29-3	Average
Date	9/9/97	9/10/97	9/10/97	
Clock Time, 24-hr clock	1029-1503	0810-1315	1520-2021	
Concentration:				
gr/dscf [a]	0.00259	0.0000333	0.00109	0.00124
gr/dscf @ 7% O_2 [b]	0.00441	0.0000467	0.00154	0.00200
g/dscm [c]	0.00592	0.0000761	0.00250	0.00283
g/dscm @ 7% O_2 [d]	0.0101	0.000107	0.00353	0.00457
Emission Rate:				
lb/hr [e]	0.711	0.0142	0.455	0.393
kg/hr [f]	0.323	0.00642	0.206	0.178

[a] Grains per dry standard cubic foot at 68° F (20° C) and 1 atm.

[b] Grains per dry standard cubic foot at 68° F (20° C) and 1 atm adjusted to 7 percent O_2.

[a] Grams per dry standard cubic meter at 68° F (20° C) and 1 atm.

[b] Grams per dry standard cubic meter at 68° F (20° C) and 1 atm adjusted to 7 percent O_2.

[c] Pounds per hour.

[f] Kilograms per hour.

TABLE 2.7

EXHAUST GAS METALS CONCENTRATIONS AND EMISSION RATES
CUPOLA BAGHOUSE OUTLET
THE WAUPACA FOUNDRY - TELL CITY, INDIANA

Run No.	O-M29-1	O-M29-2	O-M29-3	Average
Date	9/9/97	9/10/97	9/10/97	
Clock Time, 24-hr clock	1029-1503	0810-1315	1520-2021	
Antimony (Sb)				
µg/dscm [a]	2.13	1.52	1.84	1.83
µg/dscm @ 7% O_2 [b]	3.63	2.13	2.59	2.79
lb/hr [c]	0.000256	0.000283	0.000334	0.000291
Arsenic (As)				
µg/dscm [a]	0.355	0.348	0.408	0.370
µg/dscm @ 7% O_2 [b]	0.605	0.488	0.574	0.556
lb/hr [c]	0.0000427	0.0000647	0.0000740	0.0000605
Barium (Ba)				
µg/dscm [a]	25.3	16.5	18.3	20.0
µg/dscm @ 7% O_2 [b]	43.1	23.1	25.7	30.6
lb/hr [c]	0.00304	0.00306	0.00332	0.00314
Beryllium (Be)				
µg/dscm [a]	ND	ND	ND	ND
µg/dscm @ 7% O_2 [b]	ND	ND	ND	ND
lb/hr [c]	ND	ND	ND	ND
Cadmium (Cd)				
µg/dscm [a]	14.3	0.731	2.82	5.96
µg/dscm @ 7% O_2 [b]	24.4	1.03	3.98	9.80
lb/hr [c]	0.00172	0.000136	0.000513	0.000789
Chromium (Cr)				
µg/dscm [a]	4.28	2.73	3.45	3.49
µg/dscm @ 7% O_2 [b]	7.29	3.83	4.86	5.33
lb/hr [c]	0.000514	0.000508	0.000626	0.000549
Colbalt (Co)				
µg/dscm [a]	ND	ND	ND	ND
µg/dscm @ 7% O_2 [b]	ND	ND	ND	ND
lb/hr [c]	ND	ND	ND	ND
Lead (Pb)				
µg/dscm [a]	79.6	15.0	30.7	41.8
µg/dscm @ 7% O_2 [b]	136	21.1	43.3	66.7
lb/hr [c]	0.00956	0.00279	0.00558	0.00598

TABLE 2.7 (Concluded)

EXHAUST GAS METALS CONCENTRATIONS AND EMISSION RATES
CUPOLA BAGHOUSE OUTLET
THE WAUPACA FOUNDRY - TELL CITY, INDIANA

Run No.	O-M29-1	O-M29-2	O-M29-3	Average
Manganese (Mn)				
µg/dscm [a]	16.7	15.6	29.5	20.6
µg/dscm @ 7% O_2 [b]	28.4	21.8	41.5	30.6
lb/hr [c]	0.00200	0.00289	0.00535	0.00342
Mercury (Hg)				
µg/dscm [a]	101	46.2	29.8	59.0
µg/dscm @ 7% O_2 [b]	172	64.9	41.9	93.0
lb/hr [c]	0.0121	0.00859	0.00541	0.00871
Nickel (Ni)				
µg/dscm [a]	2.97	1.80	2.21	2.33
µg/dscm @ 7% O_2 [b]	5.06	2.53	3.11	3.57
lb/hr [c]	0.000356	0.000335	0.000402	0.000364
Phosphorus (P)				
µg/dscm [a]	39.6	24.9	22.7	29.1
µg/dscm @ 7% O_2 [b]	67.5	34.9	31.9	44.8
lb/hr [c]	0.00476	0.00463	0.00412	0.00450
Selenium (Se)				
µg/dscm [a]	2.03	1.68	1.62	1.77
µg/dscm @ 7% O_2 [b]	3.45	2.36	2.28	2.70
lb/hr [c]	0.000243	0.000312	0.000294	0.000283
Silver (Ag)				
µg/dscm [a]	0.144	0.0888	0.498	0.244
µg/dscm @ 7% O_2 [b]	0.246	0.125	0.702	0.357
lb/hr [c]	0.0000173	0.0000165	0.0000905	0.0000414
Thallium (Tl)				
µg/dscm [a]	ND	ND	ND	ND
µg/dscm @ 7% O_2 [b]	ND	ND	ND	ND
lb/hr [c]	ND	ND	ND	ND
Zinc (Zn)				
µg/dscm [a]	69.2	72.4	203	115
µg/dscm @ 7% O_2 [b]	118	102	286	169
lb/hr [c]	0.00831	0.0135	0.0369	0.0196

[a] Micrograms per dry standard cubic meter at 68° F (20° C) and 1 atm.

[b] Micrograms per dry standard cubic meter at 68° F (20° C) and 1 atm, adjusted to 7% O_2.

[c] Pounds per hour.

ND Not Detected

TABLE 2.8

PARTICULATE MATTER AND METALS REMOVAL EFFICIENCIES
CUPOLA BAGHOUSE
THE WAUPACA FOUNDRY - TELL CITY, INDIANA

Test Set No.	M29-1	M29-2	M29-3	Average
Date	9/9/97	9/10/97	9/10/97	
PM Emission Rate, lb/hr:[a]				
Inlet	143	472	354	323
Outlet	0.711	0.0142	0.455	0.393
Removal Efficiency, %: [b]	99.50	99.997	99.87	99.79
Total Metals Emission Rate, lb/hr:[a]				
Inlet	24.5	67.5	50.0	47.3
Outlet	0.0430	0.0371	0.0630	0.0477
Removal Efficiency, %: [b]	99.82	99.95	99.87	99.88

[a] Pounds per hour.

[b] Percent removal efficiencies are calculated using the emission rates (lb/hr).

TABLE 2.9

PCDDS/PCDFS EMISSIONS SAMPLING AND EXHAUST GAS PARAMETERS
CUPOLA BAGHOUSE OUTLET
THE WAUPACA FOUNDRY - TELL CITY, INDIANA

Run No.	BO-23-1	BO-23-2	BO-23-3	Average
Date	9/9/97	9/10/97	9/10/97	
Total Sampling Time, min	240	240	240	
Average Sampling Rate, dscfm [a]	0.486	0.669	0.660	0.605
Sample Volume:				
dscf [b]	116.671	160.663	158.414	145.249
dscm [c]	3.304	4.549	4.486	4.113
Average Exhaust Gas Temp., °F	230	258	254	247
O_2 Concentration, % by Volume	12.7	11.0	11.0	11.6
CO_2 Concentration, % by Volume	8.8	10.1	10.0	9.6
Moisture, % by Volume	3.4	2.6	2.4	2.8
Exhaust Gas Volumetric Flow Rate:				
acfm [d]	49,400	69,500	68,800	62,600
dscfm [a]	36,000	49,200	49,100	44,800
dscmm [e]	1,020	1,390	1,390	1,270
Isokinetic Sampling Ratio, %	98.9	99.7	98.5	99.0

[a] Dry standard cubic feet per minute at 68° F (20° C) and 1 atm.

[b] Dry standard cubic feet at 68° F (20° C) and 1 atm.

[c] Dry standard cubic meters at 68° F (20° C) and 1 atm.

[d] Actual cubic feet per minute at exhaust gas conditions.

[e] Dry standard cubic meters per minute at 68° F (20° C) and 1 atm.

another aliquot of the sample was analyzed using a DB-225 capillary column to measure the 2,3,7,8 tetra-chloro dibenzofuran isomer (2378 TCDF).

Some PCDDs/PCDFs catch weights were reported as estimated maximum possible values or EMPCs. Catch weights, concentrations, and emission rates based on EMPC values were noted by enclosing them in brackets ({}). EMPC values were included in the three-run averages and total PCDDs/PCDFs calculations. Averages or totals that were based on EMPC values were also enclosed in brackets to indicate the values were estimated. The PCDDs/PCDFs test results are presented in actual concentrations and mass emission rates, concentrations adjusted to 7% O_2, and concentrations adjusted to 7% O_2 in 2378 TCDF toxic equivalents.

Table 2.10 presents the PCDDs/PCDFs stack gas concentrations and emission rates. The average concentration of total PCDDs was estimated to be {12.3} ng/dscm. The average concentration of total PCDFs was estimated to be {111} ng/dscm. The average concentration of total PCDDs/PCDFs was estimated to be {123} ng/dscm. These values corresponded to average estimated emission rates of {992}, {8,764}, and {9,756} µg/hr, respectively.

Table 2.11 presents the PCDDs/PCDFs concentrations adjusted to 7% O_2. The average measured stack gas O_2 concentration was 11.6%. The average adjusted concentration of total PCDDs was estimated to be {17.7} ng/dscm @ 7% O_2. The average adjusted concentration of total PCDFs was estimated to be {162} ng/dscm @ 7% O_2. The average adjusted concentration of total PCDDs/PCDFs was {179} ng/dscm @ 7% O_2. The concentrations, adjusted to 7% O_2, were also adjusted by each congeners respective Toxic Equivalency Factor (TEF). The TEFs used were the international TEF values. The average concentration for total PCDDs/PCDFs, adjusted for the 2378 TCDD TEFs, was estimated to be {3.65} ng/dscm @ 7% O_2.

2.4 SEMIVOLATILE ORGANIC HAZARDOUS AIR POLLUTANTS

The semivolatile organic hazardous air pollutants (SVOHAPs) were collected using a SW-846 Method 0010 Modified Method 5 (MM5) sampling train. The MM5 sampling train collects organic-laden particulate materials and semi-volatile organics species. This method speciates and quantitates low concentrations of these semi-volatile organics with boiling points above about 100°C.

Table 2.12 summarizes the SVOHAPs emissions sampling and exhaust gas parameters at the cupola baghouse outlet. The total sampling time for each run was 240 minutes. The average sample volume was 142.003 dscf or 4.021 dscm. The average exhaust gas temperature was 249°F. The exhaust gas contained 9.6% CO_2, 11.6% O_2, and 2.9% moisture. The average exhaust gas volumetric flow rate was 60,900 acfm or 43,400 dscfm or 1,230 dscmm.

TABLE 2.10

PCDDS/PCDFS EXHAUST GAS CONCENTRATIONS AND EMISSION RATES
CUPOLA BAGHOUSE OUTLET
THE WAUPACA FOUNDRY - TELL CITY, INDIANA

CONGENER	CONCENTRATION [a] ng/dscm, as measured				EMISSION RATE [b] µg/hr			
	BO-23-1	BO-23-2	BO-23-3	Average	BO-23-1	BO-23-2	BO-23-3	Average
DIOXINS:								
2378 TCDD	0.0696	0.119	0.163	0.117	4.26	9.92	13.6	9.25
Total TCDD	2.12	4.42	7.40	4.65	130	369	617	372
12378 PeCDD	0.133	0.374	0.557	0.355	8.14	31.2	46.5	28.6
Total PeCDD	1.03	3.17	6.73	3.64	62.9	264	561	296
123478 HxCDD	{0.0454}	0.163	0.245	{0.151}	{2.78}	13.6	20.4	{12.3}
123678 HxCDD	0.0726	0.308	0.490	0.290	4.44	25.7	40.9	23.7
123789 HxCDD	0.0969	0.418	0.557	0.357	5.92	34.9	46.5	29.1
Total HxCDD	0.848	3.34	5.04	3.08	51.8	279	420	250
1234678 HpCDD	0.115	0.462	0.713	0.430	7.03	38.6	59.5	35.0
Total HpCDD	0.203	0.879	1.34	0.807	12.4	73.5	112	65.8
12346789 OCDD	{0.0333}	0.130	{0.127}	{0.0967}	{2.04}	10.8	{10.6}	{7.82}
Total PCDDs	{4.23}	11.9	{20.6}	{12.3}	{259}	997	{1,721}	{992}
FURANS:								
2378 TCDF	1.06	1.49	2.50	1.68	64.8	125	208	133
Total TCDF	39.7	57.6	74.9	57.4	2,424	4,812	6,246	4,494
12378 PeCDF	0.938	2.09	3.08	2.03	57.4	174	257	163
23478 PeCDF	1.18	2.75	4.19	2.71	72.2	230	349	217
Total PeCDF	17.4	38.5	58.0	38.0	1,066	3,214	4,833	3,038
123478 HxCDF	0.878	2.90	4.15	2.64	53.7	242	346	214
123678 HxCDF	0.454	1.52	2.01	1.33	27.8	127	167	107
234678 HxCDF	0.281	1.06	1.56	0.966	17.2	88.2	130	78.5
123789 HxCDF	0.0303	0.110	0.167	0.102	1.85	9.18	13.9	8.33
Total HxCDF	4.54	14.4	21.0	13.3	278	1,207	1,755	1,080
1234678 HpCDF	0.294	1.23	1.63	1.05	17.9	103	136	85.5
1234789 HpCDF	0.0515	0.207	0.290	0.183	3.15	17.3	24.2	14.9
Total HpCDF	0.484	2.04	2.83	1.79	29.6	171	236	145
12346789 OCDF	{0.0242}	0.0901	0.145	{0.0864}	{1.48}	7.53	12.1	{7.03}
Total PCDFs	{62.1}	113	157	{111}	{3,799}	9,411	13,082	{8,764}
Total PCDDs + PCDFs	{66.4}	125	{178}	{123}	{4,057}	10,408	{14,803}	{9,756}

[a] Nanogram per dry standard cubic meter at 20°C and 1 atm.

[b] Micrograms per hour.

{ } Estimated Maximum Possible Concentration. EMPC values are used as reported in totals and averages.

TABLE 2.11

PCDDS/PCDFS EXHAUST GAS CONCENTRATIONS AND 2378 TOXIC EQUIVALENT STACK GAS CONCENTRATIONS ADJUSTED TO 7 PERCENT OXYGEN
CUPOLA BAGHOUSE OUTLET
THE WAUPACA FOUNDRY - TELL CITY, INDIANA

CONGENER	CONCENTRATION (ng/dscm, adjusted to 7% O2)				2378-TCDD [b] Toxic Equivalent Factor	2378 TOXIC EQUIVALENCIES (ng/dscm, adjusted to 7% O2)			
	BO-23-1	BO-23-2	BO-23-3	Average		BO-23-1	BO-23-2	BO-23-3	Average
DIOXINS:									
2378 TCDD	0.119	0.167	0.229	0.171	1.00	0.119	0.167	0.229	0.171
Total TCDD	3.61	6.20	10.4	6.75					
12378 PeCDD	0.227	0.525	0.785	0.512	0.500	0.113	0.262	0.392	0.256
Total PeCDD	1.75	4.44	9.48	5.23					
123478 HxCDD	{0.0773}	0.228	0.345	{0.217}	0.100	{0.00773}	0.0228	0.0345	{0.0217}
123678 HxCDD	0.124	0.432	0.691	0.415	0.100	0.0124	0.0432	0.0691	0.0415
123789 HxCDD	0.165	0.586	0.785	0.512	0.100	0.0165	0.0586	0.0785	0.0512
Total HxCDD	1.44	4.69	7.10	4.41					
1234678 HpCDD	0.196	0.648	1.00	0.616	0.0100	0.00196	0.00648	0.0100	0.00616
Total HpCDD	0.345	1.23	1.88	1.15					
12346789 OCDD	{0.0567}	0.182	{0.179}	{0.139}	0.00100	{5.67 E-05}	0.000182	{0.000179}	{0.000139}
Total PCDDs	{7.21}	16.8	{29.1}	{17.7}		{0.271}	0.560	{0.814}	{0.548}
FURANS:									
2378 TCDF	1.80	2.10	3.52	2.47	0.100	0.180	0.210	0.352	0.247
Total TCDF	67.5	80.9	105	84.6					
12378 PeCDF	1.60	2.93	4.33	2.95	0.0500	0.0799	0.147	0.217	0.148
23478 PeCDF	2.01	3.86	5.90	3.92	0.500	1.01	1.93	2.95	1.96
Total PeCDF	29.7	54.0	81.6	55.1					
123478 HxCDF	1.50	4.07	5.84	3.80	0.100	0.150	0.407	0.584	0.380
123678 HxCDF	0.773	2.13	2.83	1.91	0.100	0.0773	0.213	0.283	0.191
234678 HxCDF	0.480	1.48	2.20	1.39	0.100	0.0480	0.148	0.220	0.139
123789 HxCDF	0.0516	0.154	0.235	0.147	0.100	0.00516	0.0154	0.0235	0.0147
Total HxCDF	7.73	20.3	29.6	19.2					
1234678 HpCDF	0.500	1.73	2.29	1.51	0.0100	0.00500	0.0173	0.0229	0.0151
1234789 HpCDF	0.0877	0.290	0.408	0.262	0.0100	0.000877	0.00290	0.00408	0.00262
Total HpCDF	0.825	2.87	3.99	2.56					
12346789 OCDF	{0.0412}	0.127	0.204	{0.124}	0.00100	{4.12 E-05}	0.000127	0.000204	{0.000124}
Total PCDFs	{106}	158	221	{162}		{1.55}	3.09	4.66	{3.10}
Total PCDDs + PCDFs	{113}	175	{250}	{179}		{1.82}	3.65	{5.47}	{3.65}

[a] Nanogram per dry standard cubic meter adjusted to 7 percent oxygen at 20°C and 1 atm.

[b] North Atlantic Treaty Organization, Committee on the challenges of Modern Society. Pilot study on International Information Exchange on Dioxins and Related Compounds: International Toxicity Equivalency Factor (I-TEF) Methods of Risk Assessment for Complex Mixtures of Dioxins and Related Compounds. Report No. 176, August 1988.

( ) Non Detectable - Results are below target analyte detection limits. ND values are used as zeroes (0) in totals and averages.

{ } Estimated Maximum Possible Concentration. EMPC values are used as reported in totals and averages.

TABLE 2.12

SVOHAPS EMISSIONS SAMPLING AND EXHAUST GAS PARAMETERS
CUPOLA BAGHOUSE OUTLET
THE WAUPACA FOUNDRY - TELL CITY, INDIANA

Run No.	BO-0010-1	BO-0010-2	BO-0010-3	Average
Date	9/9/97	9/10/97	9/10/97	
Total Sampling Time, min	240	240	240	
Average Sampling Rate, dscfm [a]	0.458	0.627	0.690	0.592
Sample Volume:				
dscf [b]	110.023	150.485	165.500	142.003
dscm [c]	3.116	4.261	4.686	4.021
Average Exhaust Gas Temp., °F	234	258	256	249
O_2 Concentration, % by Volume	12.7	11.0	11.0	11.6
CO_2 Concentration, % by Volume	8.8	10.1	10.0	9.6
Moisture, % by Volume	3.4	2.7	2.6	2.9
Exhaust Gas Volumetric Flow Rate:				
acfm [d]	46,600	66,700	69,300	60,900
dscfm [a]	33,800	47,200	49,200	43,400
dscmm [e]	957	1,340	1,390	1,230
Isokinetic Sampling Ratio, %	99.4	97.3	102.6	99.7

[a] Dry standard cubic feet per minute at 68° F (20° C) and 1 atm.

[b] Dry standard cubic feet at 68° F (20° C) and 1 atm.

[c] Dry standard cubic meters at 68° F (20° C) and 1 atm.

[d] Actual cubic feet per minute at exhaust gas conditions.

[e] Dry standard cubic meters per minute at 68° F (20° C) and 1 atm.

The results of the semivolatile organic emissions are shown in Table 2.13. Analysis was performed for 70 target compounds. Of these 70 target compounds, 50 were not detected. In cases where a compound was not detected, the emission rate, and concentration, was replaced with a "ND". If a compound was not detected in one of the three runs, a zero was used in the three-run average for that compound and was not summed in any SVOHAPs totals.

Analysis for the SVOHAPs was performed using SW-846 Method 8270. The lower quantitation limit for SW-846 Method 8270 for all but four compounds was 10 μg/sample. The four compounds, 2,4-dinitrophenol, 4-nitrophenol, 4,6-dinitro-2-methylphenol and pentachlorophenol, had quantitation limits of 25 μg/sample. Some samples had reported values below the quantitation limit but above the detection limit. This was the case for 19 of the 20 detected target compounds. Like the PCDDs/PCDFs, these values were reported as estimates and all values and calculated results were enclosed by brackets ({}) to indicate that the compound was detected but was below the quantitation limit. These estimated values were used in the three-run averages and the resulting averages were also enclosed in brackets to indicate the values were estimated.

Five compounds were detected in the run samples that were also detected in the laboratory blank (sample ID SBLK 091497). Naphthalene, phenol, acetophenone, di-n-butylphthalate, and bis(2-ethylhexyl)phthalate were detected in the laboratory blank, but at amounts below the quantitation limit. TLI's case narrative advises that target analytes in the laboratory blanks should not be considered as truly present in the native samples unless found at five times the amount found in the blank. In the case of di-n-butylphthalate, all three run samples had estimated amounts that were less than five times the blank and therefore should not be considered truly present in the native samples. In the case of acetophenone, only the first and third run's samples had estimated amount slightly higher than five times the estimated lab blank value. In the case of bis(2-ethylhexyl)phthalate and phenol, all three run samples had estimated catches that were more than five times the estimated lab blank value. In the case of naphthalene, the first and third run samples estimated catches were 12.9 and 13.4 times, respectively, that of the estimated blank value, while the second run's estimated catch was only three times the estimated blank value. The TLI's case narrative also advises that "in the event that the amount of a target analyte found in the samples is twenty times the amount found in the associated blank, the contribution from the blank can be considered negligible." The estimated amounts of phenol in all samples and the estimated amount of bis(2-ethylhexyl) phthalate in the third run's sample were all greater than 20 times the estimated blank value. Refer to Table 6.16 in section 6.0 for a complete listing of all the detected or estimated SW-846 Method 0010 field, method, and laboratory blanks compared to the average sample catch weights.

TABLE 2.13

SVOHAPS EXHAUST GAS CONCENTRATIONS AND EMISSION RATES
CUPOLA BAGHOUSE OUTLET
THE WAUPACA FOUNDRY - TELL CITY, INDIANA

Run No.	BO-0010-1	BO-0010-2	BO-0010-3	Average
Date	9/9/97	9/10/97	9/10/97	
Clock Time, 24-hr clock	1029-1503	0810-1315	1520-2008	
Acenaphthene				
Concentration, ppbvd [a]	ND	ND	ND	ND
Emission Rate, lb/hr [b]	ND	ND	ND	ND
Acenaphthylene				
Concentration, ppbvd [a]	{2.70E-02}	ND	{1.50E-02}	{1.40E-02}
Emission Rate, lb/hr [b]	{2.19E-05}	ND	{1.77E-05}	{1.32E-05}
Acetophenone				
Concentration, ppbvd [a]	1.79E+00	6.54E-01	1.09E+00	1.18E+00
Emission Rate, lb/hr [b]	1.13E-03	5.78E-04	1.01E-03	9.07E-04
4-Aminobiphenyl				
Concentration, ppbvd [a]	ND	ND	ND	ND
Emission Rate, lb/hr [b]	ND	ND	ND	ND
Aniline				
Concentration, ppbvd [a]	ND	ND	ND	ND
Emission Rate, lb/hr [b]	ND	ND	ND	ND
o-Anisidine				
Concentration, ppbvd [a]	ND	ND	ND	ND
Emission Rate, lb/hr [b]	ND	ND	ND	ND
Anthracene				
Concentration, ppbvd [a]	ND	ND	ND	ND
Emission Rate, lb/hr [b]	ND	ND	ND	ND
Benzidine				
Concentration, ppbvd [a]	ND	ND	ND	ND
Emission Rate, lb/hr [b]	ND	ND	ND	ND
Benzo(a)anthracene				
Concentration, ppbvd [a]	ND	ND	ND	ND
Emission Rate, lb/hr [b]	ND	ND	ND	ND
Benzo(b)fluoranthene				
Concentration, ppbvd [a]	ND	ND	ND	ND
Emission Rate, lb/hr [b]	ND	ND	ND	ND

TABLE 2.13 (Continued)

SVOHAPS EXHAUST GAS CONCENTRATIONS AND EMISSION RATES
CUPOLA BAGHOUSE OUTLET
THE WAUPACA FOUNDRY - TELL CITY, INDIANA

Run No.	BO-0010-1	BO-0010-2	BO-0010-3	Average
Benzo(k)fluoranthene				
Concentration, ppbvd [a]	ND	ND	ND	ND
Emission Rate, lb/hr [b]	ND	ND	ND	ND
Benzo(ghi)perylene				
Concentration, ppbvd [a]	ND	ND	ND	ND
Emission Rate, lb/hr [b]	ND	ND	ND	ND
Benzo(a)pyrene				
Concentration, ppbvd [a]	ND	ND	ND	ND
Emission Rate, lb/hr [b]	ND	ND	ND	ND
Benzo(e)pyrene				
Concentration, ppbvd [a]	ND	ND	ND	ND
Emission Rate, lb/hr [b]	ND	ND	ND	ND
Benzyl Chloride				
Concentration, ppbvd [a]	ND	ND	ND	ND
Emission Rate, lb/hr [b]	ND	ND	ND	ND
Biphenyl				
Concentration, ppbvd [a]	{2.62E-01}	{1.17E-02}	{2.18E-01}	{1.64E-01}
Emission Rate, lb/hr [b]	{2.12E-04}	{1.33E-05}	{2.57E-04}	{1.61E-04}
2-Chloroacetophenone				
Concentration, ppbvd [a]	ND	ND	ND	ND
Emission Rate, lb/hr [b]	ND	ND	ND	ND
bis-(2-Chloroethyl)ether				
Concentration, ppbvd [a]	ND	ND	ND	ND
Emission Rate, lb/hr [b]	ND	ND	ND	ND
2-Chloronaphthalene				
Concentration, ppbvd [a]	ND	ND	ND	ND
Emission Rate, lb/hr [b]	ND	ND	ND	ND
Chrysene				
Concentration, ppbvd [a]	ND	ND	ND	ND
Emission Rate, lb/hr [b]	ND	ND	ND	ND
Cumene				
Concentration, ppbvd [a]	{1.39E-01}	{1.22E-02}	{1.01E-01}	{8.41E-02}
Emission Rate, lb/hr [b]	{8.82E-05}	{1.08E-05}	{9.28E-05}	{6.39E-05}

TABLE 2.13 (Continued)

SVOHAPS EXHAUST GAS CONCENTRATIONS AND EMISSION RATES
CUPOLA BAGHOUSE OUTLET
THE WAUPACA FOUNDRY - TELL CITY, INDIANA

Run No.	BO-0010-1	BO-0010-2	BO-0010-3	Average
Dibenz(a,h)anthracene				
Concentration, ppbvd [a]	ND	ND	ND	ND
Emission Rate, lb/hr [b]	ND	ND	ND	ND
Dibenzofuran				
Concentration, ppbvd [a]	{1.21E-01}	ND	{1.41E-01}	{8.72E-02}
Emission Rate, lb/hr [b]	{1.07E-04}	ND	{1.82E-04}	{9.62E-05}
1,2-Dibromo-3-chloropropane				
Concentration, ppbvd [a]	ND	ND	ND	ND
Emission Rate, lb/hr [b]	ND	ND	ND	ND
Di-n-butylphthalate				
Concentration, ppbvd [a]	{1.57E-01}	{7.10E-02}	{3.87E-02}	{8.88E-02}
Emission Rate, lb/hr [b]	{2.30E-04}	{1.45E-04}	{8.26E-05}	{1.52E-04}
1,4-Dichlorobenzene				
Concentration, ppbvd [a]	{1.07E-01}	{5.84E-02}	{9.15E-02}	{8.57E-02}
Emission Rate, lb/hr [b]	{8.29E-05}	{6.31E-05}	{1.03E-04}	{8.30E-05}
3,3'-Dichlorobenzidine				
Concentration, ppbvd [a]	ND	ND	ND	ND
Emission Rate, lb/hr [b]	ND	ND	ND	ND
N,N-Diethylaniline				
Concentration, ppbvd [a]	ND	ND	ND	ND
Emission Rate, lb/hr [b]	ND	ND	ND	ND
3,3'-Dimethoxybenzidine				
Concentration, ppbvd [a]	ND	ND	ND	ND
Emission Rate, lb/hr [b]	ND	ND	ND	ND
Dimethylaminoazobenzene				
Concentration, ppbvd [a]	ND	ND	ND	ND
Emission Rate, lb/hr [b]	ND	ND	ND	ND
N,N-Dimethylaniline				
Concentration, ppbvd [a]	ND	ND	ND	ND
Emission Rate, lb/hr [b]	ND	ND	ND	ND
3,3'-Dimethylbenzidine				
Concentration, ppbvd [a]	ND	ND	ND	ND
Emission Rate, lb/hr [b]	ND	ND	ND	ND

TABLE 2.13 (Continued)

SVOHAPS EXHAUST GAS CONCENTRATIONS AND EMISSION RATES
CUPOLA BAGHOUSE OUTLET
THE WAUPACA FOUNDRY - TELL CITY, INDIANA

Run No.	BO-0010-1	BO-0010-2	BO-0010-3	Average
Dimethylphthalate				
Concentration, ppbvd [a]	{1.44E-01}	{7.62E-02}	{4.28E-02}	{8.78E-02}
Emission Rate, lb/hr [b]	{1.47E-04}	{1.09E-04}	{6.37E-05}	{1.07E-04}
4,6-Dinitro-2-methylphenol				
Concentration, ppbvd [a]	ND	ND	ND	ND
Emission Rate, lb/hr [b]	ND	ND	ND	ND
2,4-Dinitrophenol				
Concentration, ppbvd [a]	ND	ND	ND	ND
Emission Rate, lb/hr [b]	ND	ND	ND	ND
2,4-Dinitrotoluene				
Concentration, ppbvd [a]	ND	ND	ND	ND
Emission Rate, lb/hr [b]	ND	ND	ND	ND
bis(2-Ethylhexyl)phthalate				
Concentration, ppbvd [a]	3.15E-01	{8.64E-02}	2.55E-01	{2.19E-01}
Emission Rate, lb/hr [b]	6.48E-04	{2.48E-04}	7.62E-04	{5.52E-04}
Fluoranthene				
Concentration, ppbvd [a]	{2.10E-02}	ND	{2.77E-02}	{2.43E-02}
Emission Rate, lb/hr [b]	{2.23E-05}	ND	{4.29E-05}	{3.26E-05}
Fluorene				
Concentration, ppbvd [a]	{3.99E-02}	ND	{3.52E-02}	{2.51E-02}
Emission Rate, lb/hr [b]	{3.49E-05}	ND	{4.48E-05}	{2.66E-05}
Hexachlorobenzene				
Concentration, ppbvd [a]	ND	{1.07E-02}	{1.03E-02}	{6.99E-03}
Emission Rate, lb/hr [b]	ND	{2.24E-05}	{2.24E-05}	{1.49E-05}
Hexachlorobutadiene				
Concentration, ppbvd [a]	ND	ND	ND	ND
Emission Rate, lb/hr [b]	ND	ND	ND	ND
Hexachlorocyclopentadiene				
Concentration, ppbvd [a]	ND	ND	ND	ND
Emission Rate, lb/hr [b]	ND	ND	ND	ND
Hexachloroethane				
Concentration, ppbvd [a]	ND	ND	ND	ND
Emission Rate, lb/hr [b]	ND	ND	ND	ND

TABLE 2.13 (Continued)

SVOHAPS EXHAUST GAS CONCENTRATIONS AND EMISSION RATES
CUPOLA BAGHOUSE OUTLET
THE WAUPACA FOUNDRY - TELL CITY, INDIANA

Run No.	BO-0010-1	BO-0010-2	BO-0010-3	Average
Hydroquinone				
Concentration, ppbvd [a]	{2.11E-01}	ND	ND	{7.04E-02}
Emission Rate, lb/hr [b]	{1.22E-04}	ND	ND	{4.08E-05}
Indeno(1,2,3-cd)pyrene				
Concentration, ppbvd [a]	ND	ND	ND	ND
Emission Rate, lb/hr [b]	ND	ND	ND	ND
Isophorone				
Concentration, ppbvd [a]	ND	ND	ND	ND
Emission Rate, lb/hr [b]	ND	ND	ND	ND
Methylene bis-chloroaniline				
Concentration, ppbvd [a]	ND	ND	ND	ND
Emission Rate, lb/hr [b]	ND	ND	ND	ND
4,4'-Methylenedianiline				
Concentration, ppbvd [a]	ND	ND	ND	ND
Emission Rate, lb/hr [b]	ND	ND	ND	ND
2-Methylnaphthalene				
Concentration, ppbvd [a]	{3.19E-01}	{5.20E-02}	{1.92E-01}	{1.88E-01}
Emission Rate, lb/hr [b]	{2.39E-04}	{5.44E-05}	{2.10E-04}	{1.68E-04}
2-Methylphenol				
Concentration, ppbvd [a]	ND	ND	ND	ND
Emission Rate, lb/hr [b]	ND	ND	ND	ND
3/4-Methylphenol				
Concentration, ppbvd [a]	ND	ND	ND	ND
Emission Rate, lb/hr [b]	ND	ND	ND	ND
Naphthalene				
Concentration, ppbvd [a]	1.25E+00	{2.13E-01}	8.65E-01	{7.76E-01}
Emission Rate, lb/hr [b]	8.43E-04	{2.00E-04}	8.50E-04	{6.31E-04}
Nitrobenzene				
Concentration, ppbvd [a]	ND	ND	ND	ND
Emission Rate, lb/hr [b]	ND	ND	ND	ND
4-Nitrobiphenyl				
Concentration, ppbvd [a]	ND	ND	ND	ND
Emission Rate, lb/hr [b]	ND	ND	ND	ND

TABLE 2.13 (Continued)

SVOHAPS EXHAUST GAS CONCENTRATIONS AND EMISSION RATES
CUPOLA BAGHOUSE OUTLET
THE WAUPACA FOUNDRY - TELL CITY, INDIANA

Run No.	BO-0010-1	BO-0010-2	BO-0010-3	Average
4-Nitrophenol				
Concentration, ppbvd [a]	ND	ND	ND	ND
Emission Rate, lb/hr [b]	ND	ND	ND	ND
n-Nitrosodimethylamine				
Concentration, ppbvd [a]	ND	ND	ND	ND
Emission Rate, lb/hr [b]	ND	ND	ND	ND
n-Nitrosomorpholine				
Concentration, ppbvd [a]	ND	ND	ND	ND
Emission Rate, lb/hr [b]	ND	ND	ND	ND
Pentachloronitrobenzene				
Concentration, ppbvd [a]	ND	ND	ND	ND
Emission Rate, lb/hr [b]	ND	ND	ND	ND
Pentachlorophenol				
Concentration, ppbvd [a]	ND	{3.48E-02}	{4.78E-02}	{2.75E-02}
Emission Rate, lb/hr [b]	ND	{6.80E-05}	{9.75E-05}	{5.52E-05}
Perylene				
Concentration, ppbvd [a]	ND	ND	ND	ND
Emission Rate, lb/hr [b]	ND	ND	ND	ND
Phenanthrene				
Concentration, ppbvd [a]	{1.41E-01}	{1.24E-02}	{1.63E-01}	{1.05E-01}
Emission Rate, lb/hr [b]	{1.32E-04}	{1.62E-05}	{2.22E-04}	{1.23E-04}
Phenol				
Concentration, ppbvd [a]	1.29E+00	{1.88E-01}	{4.74E-01}	{6.51E-01}
Emission Rate, lb/hr [b]	6.39E-04	{1.30E-04}	{3.42E-04}	{3.70E-04}
1,4-Phenylenediamine				
Concentration, ppbvd [a]	ND	ND	ND	ND
Emission Rate, lb/hr [b]	ND	ND	ND	ND
Pyrene				
Concentration, ppbvd [a]	ND	ND	ND	ND
Emission Rate, lb/hr [b]	ND	ND	ND	ND
o-Toluidine				
Concentration, ppbvd [a]	ND	ND	ND	ND
Emission Rate, lb/hr [b]	ND	ND	ND	ND

TABLE 2.13 (Concluded)

SVOHAPS EXHAUST GAS CONCENTRATIONS AND EMISSION RATES
CUPOLA BAGHOUSE OUTLET
THE WAUPACA FOUNDRY - TELL CITY, INDIANA

Run No.	BO-0010-1	BO-0010-2	BO-0010-3	Average
1,2,4-Trichlorobenzene				
Concentration, ppbvd [a]	{1.23E-01}	{1.24E-01}	{1.40E-01}	{1.29E-01}
Emission Rate, lb/hr [b]	{1.17E-04}	{1.66E-04}	{1.95E-04}	{1.59E-04}
2,4,5-Trichlorophenol				
Concentration, ppbvd [a]	ND	ND	ND	ND
Emission Rate, lb/hr [b]	ND	ND	ND	ND
2,4,6-Trichlorophenol				
Concentration, ppbvd [a]	8.55E-01	{6.09E-02}	6.40E-01	{5.18E-01}
Emission Rate, lb/hr [b]	8.88E-04	{8.84E-05}	9.68E-04	{6.48E-04}
a,a,a-Trichlorotoluene				
Concentration, ppbvd [a]	ND	ND	ND	ND
Emission Rate, lb/hr [b]	ND	ND	ND	ND
Trifluralin				
Concentration, ppbvd [a]	ND	ND	ND	ND
Emission Rate, lb/hr [b]	ND	ND	ND	ND

[a] Parts per billion by volume.

[b] Pounds per hour.

ND Not Detectable - Results are below target analyte detection limit. Values are counted as zero (0) in averages.

{ } Estimate - Analyte results are below the quantitation limit and above the detection limit. Values are counted in the averages.

TABLE 2.14

SVOHAPS IN-STACK DETECTION LIMITS (PPBVD)
CUPOLA BAGHOUSE OUTLET
THE WAUPACA FOUNDRY - TELL CITY, INDIANA

Run No.	BO-0010-1	BO-0010-2	BO-0010-3	Average
Date	09/09/97	09/10/97	09/10/97	
Clock Time, 24-hr clock	1029-1503	0810-1315	1520-2008	
Acenaphthene	1.55E-02	1.50E-02	9.65E-03	1.34E-02
Acenaphthylene	D	9.15E-03	D	9.15E-03
Acetophenone	D	D	D	NA
4-Aminobiphenyl	1.19E-02	1.03E-02	7.28E-03	9.83E-03
Aniline	2.49E-02	2.06E-02	1.43E-02	1.99E-02
o-Anisidine	3.51E-02	3.30E-02	2.13E-02	2.98E-02
Anthracene	1.08E-02	9.82E-03	6.62E-03	9.09E-03
Benzidine	2.22E-02	2.11E-02	1.39E-02	1.91E-02
Benzo(a)anthracene	1.35E-02	1.31E-02	8.54E-03	1.17E-02
Benzo(b)fluoranthene	1.65E-02	1.99E-02	1.10E-02	1.58E-02
Benzo(k)fluoranthene	1.59E-02	1.95E-02	1.06E-02	1.53E-02
Benzo(ghi)perylene	2.29E-02	2.80E-02	1.52E-02	2.20E-02
Benzo(a)pyrene	1.84E-02	2.24E-02	1.22E-02	1.76E-02
Benzo(e)pyrene	1.62E-02	1.97E-02	1.08E-02	1.56E-02
Benzyl Chloride	1.04E-02	8.92E-03	6.08E-03	8.46E-03
Biphenyl	D	D	D	NA
2-Chloroacetophenone	1.20E-02	1.10E-02	6.97E-03	9.97E-03
bis-(2-Chloroethyl)ether	3.83E-02	3.24E-02	2.23E-02	3.10E-02
2-Chloronaphthalene	1.38E-02	1.32E-02	8.52E-03	1.18E-02
Chrysene	1.45E-02	1.41E-02	9.22E-03	1.26E-02
Cumene	D	D	D	NA
Dibenz(a,h)anthracene	2.72E-02	3.29E-02	1.79E-02	2.60E-02
Dibenzofuran	D	9.06E-03	D	NA
1,2-Dibromo-3-chloropropane	2.84E-02	2.39E-02	1.63E-02	2.29E-02
Di-n-butylphthalate	D	D	D	NA
1,4-Dichlorobenzene	D	D	D	NA
3,3'-Dichlorobenzidine	3.97E-02	3.84E-02	2.51E-02	3.44E-02
N,N-Diethylaniline	1.45E-02	1.21E-02	8.25E-03	1.16E-02
3,3'-Dimethoxybenzidine	4.99E-02	4.81E-02	3.15E-02	4.32E-02
Dimethylaminoazobenzene	3.39E-02	3.28E-02	2.14E-02	2.94E-02
N,N-Dimethylaniline	1.66E-02	1.49E-02	9.74E-03	1.37E-02
3,3'-Dimethylbenzidine	2.80E-02	2.69E-02	1.77E-02	2.42E-02
Dimethylphthalate	D	D	D	NA
4,6-Dinitro-2-methylphenol	7.99E-02	7.64E-02	4.92E-02	6.85E-02
2,4-Dinitrophenol	1.46E-01	1.39E-01	9.09E-02	1.25E-01

TABLE 2.14 (Concluded)

SVOHAPS IN-STACK DETECTION LIMITS (PPBVD)
CUPOLA BAGHOUSE OUTLET
THE WAUPACA FOUNDRY - TELL CITY, INDIANA

Run No.	BO-0010-1	BO-0010-2	BO-0010-3	Average
2,4-Dinitrophenol	1.46E-01	1.39E-01	9.09E-02	1.25E-01
2,4-Dinitrotoluene	3.52E-02	3.38E-02	2.20E-02	3.03E-02
Fluoranthene	D	7.81E-03	D	7.81E-03
Fluorene	D	1.22E-02	D	1.22E-02
Hexachlorobenzene	1.76E-02	D	D	1.76E-02
Hexachlorobutadiene	1.69E-02	1.58E-02	1.02E-02	1.43E-02
Hexachlorocyclopentadiene	1.59E-02	1.51E-02	9.78E-03	1.36E-02
Hexachloroethane	2.41E-02	2.05E-02	1.39E-02	1.95E-02
Hydroquinone	D	3.54E-02	2.28E-02	2.91E-02
Indeno(1,2,3-cd)pyrene	1.91E-02	2.33E-02	1.27E-02	1.84E-02
Isophorone	1.28E-02	1.18E-02	7.80E-03	1.08E-02
Methylene bis-chloroaniline	6.53E-02	6.32E-02	4.15E-02	5.67E-02
4,4'-Methylenedianiline	5.02E-02	4.87E-02	3.18E-02	4.36E-02
2-Methylnaphthalene	D	D	D	NA
2-Methylphenol	3.71E-02	3.13E-02	2.14E-02	2.99E-02
3/4-Methylphenol	3.28E-02	3.03E-02	1.95E-02	2.75E-02
Naphthalene	D	D	D	NA
Nitrobenzene	1.51E-02	1.42E-02	9.17E-03	1.28E-02
4-Nitrobiphenyl	2.67E-02	3.11E-02	2.13E-02	2.64E-02
4-Nitrophenol	8.05E-02	7.67E-02	5.02E-02	6.91E-02
n-Nitrosodimethylamine	8.23E-02	6.93E-02	4.71E-02	6.63E-02
n-Nitrosomorpholine	4.85E-02	4.08E-02	2.78E-02	3.91E-02
Pentachloronitrobenzene	4.03E-02	3.61E-02	2.49E-02	3.37E-02
Pentachlorophenol	2.90E-02	D	D	2.90E-02
Perylene	1.84E-02	2.24E-02	1.22E-02	1.76E-02
Phenanthrene	D	D	D	NA
Phenol	D	D	D	NA
1,4-Phenylenediamine	3.00E-02	2.77E-02	1.76E-02	2.51E-02
Pyrene	1.18E-02	1.17E-02	7.61E-03	1.04E-02
o-Toluidine	2.45E-02	2.05E-02	1.39E-02	1.96E-02
1,2,4-Trichlorobenzene	D	D	D	NA
2,4,5-Trichlorophenol	2.66E-02	2.52E-02	1.64E-02	2.27E-02
2,4,6-Trichlorophenol	D	D	D	NA
a,a,a-Trichlorotoluene	1.11E-02	1.01E-02	6.56E-03	9.24E-03
Trifluralin	2.26E-02	2.17E-02	1.41E-02	1.95E-02

D Detected; no detection limit provided; i.e. averages ignore D results.

NA Not applicable; used when all results are "D" or detected.

3.0 PROCESS AND CONTROL EQUIPMENT OPERATION

3.1 INTRODUCTION

The Waupaca foundry in Tell City, Indiana, is a completely new grey iron foundry that started operation in February 1997. The foundry casts a diverse group of products, including brake drums, shoes, rotors, calipers, and other parts. The plant operates one large cupola that melts at a rate of about 60 tons/hr (tph), and operates four pouring lines. This section of the test report provides a description of the cupola operation for iron melting, and the casting operation, including pouring, cooling, and shake out.

3.2 PROCESS DESCRIPTION

3.2.1 Iron Melting in Cupolas

The Waupaca foundry in Tell City operates a large, water-cooled cupola that melts at a rate of approximately 60 tph, with a blast rate of 10,000 to 15,000 standard cubic feet per minute (scfm), which makes it a large cupola by U.S. industry standards. Figure 3.1 is a simplified schematic of the cupola gas handling system and emission control equipment.

The cupola is charged with metal scrap, re-melt, coke, and limestone at the top of the cupola, using one of two automated skip buckets. The level of metal within the cupola is monitored, and the charge material in the skip bucket is dumped into the cupola when the level of charge falls below a set level. The seal from the charge material and a draft on the cupola prevent gases from escaping. If, for any reason, the charge material cannot be added to the cupola within five minutes of the level falling below the set point, the cupola will automatically go "off blast" until the appropriate charge level in the cupola can be achieved.

The blast air is preheated to about 1,000°F in the blast air recuperator and is introduced into the bottom of the cupola through eight tuyeres. The blast is also enriched with oxygen under certain melting conditions. The off gas from the cupola is removed at 250-300°F. The off-take duct is lined with refractory material and leads to a coarse grain separator where heavy particles are removed. The separator is cooled with non-contact water.

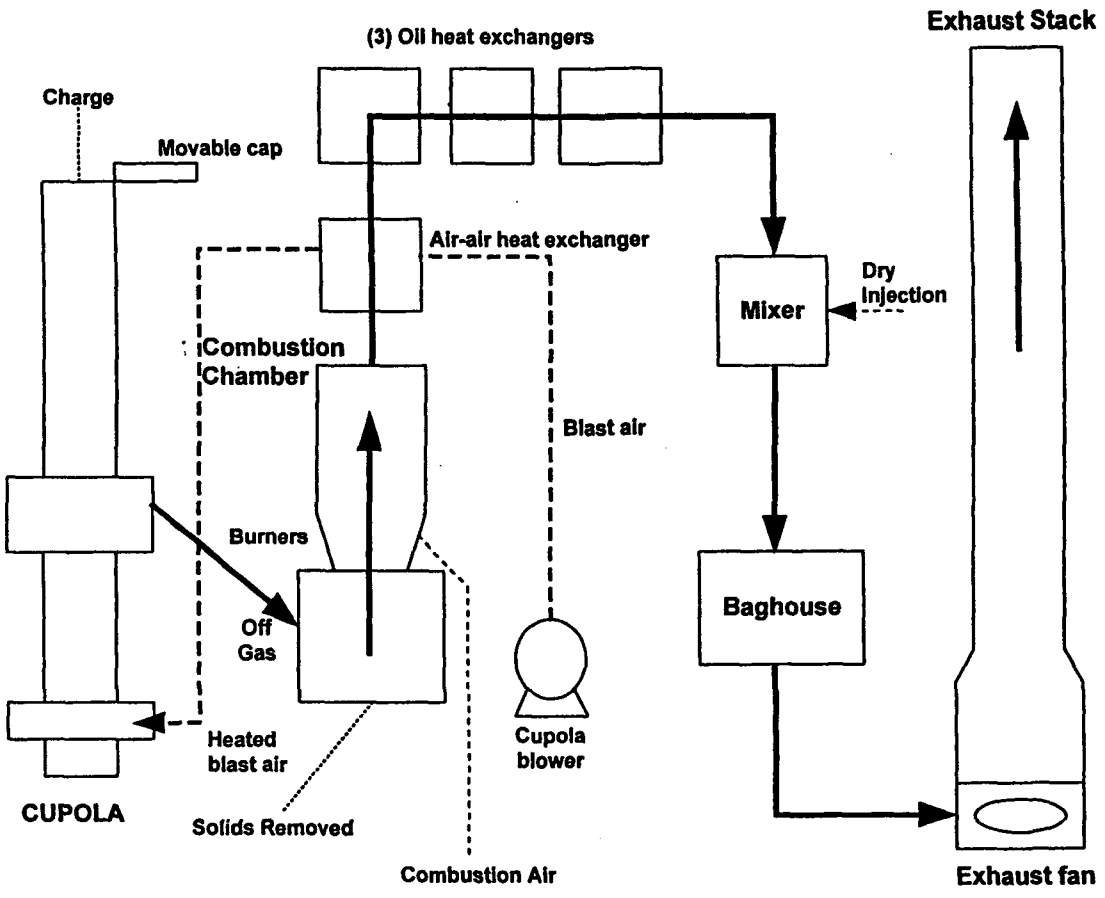

Figure 3.1. Simplified Schematic of Cupola Gas Handling System

After removal of the heavy particles, the gas enters a large combustion chamber where combustion air is introduced and the carbon monoxide (CO) is burned. Two burners are used when necessary to maintain the combustion temperature. The gas leaves the combustion chamber at approximately 1650°F, and enters a dropout chamber where additional heavy particles are removed. The hot gas then passes through an air-to-air heat exchanger (blast air recuperator), followed by a series of three oil heat exchangers that are used to cool the air. These oil heat exchangers are not currently used for heat recovery. (Modifications may be made in the future to recover and use the heat, such as for heating the building.)

The gas from the heat exchangers is injected with a dry mixture (mostly calcium carbonate and magnesium oxide) in a venturi mixer that increases the gas velocity and suspends the injected particles. Dry injection is used to improve pollutant removal in the baghouse. During the source test, the dry powder injection was turned off to afford better characterization of uncontrolled emissions and baghouse efficiency for hazardous air pollutant (HAP) constituents. The gas is then sent to a 10 module, negative pressure baghouse that uses a high temperature fabric designed to withstand temperatures of up to 320°F. The temperature of the gas at this point is typically 280 to 290°F. A fan pulls the gas through the system and discharges the cleaned gases through a stack.

The pressure drop across the baghouse is monitored, and when the pressure drop increases to six inches of water, individual bag house compartments are cycled off-line, the bags are cleaned with a pulses of air, then the compartments are brought back on-line. The baghouse uses plenum pulsing. During testing, each compartment was off line for approximately eight minutes for cleaning, with cleaning pulses occurring approximately every 30 seconds during this interval.

The plant routinely monitors several parameters associated with the cupola, including blast air and oxygen rate, and afterburner air addition rates, as well as temperature at various points in the process. The combined air flow rate through the recuperator and the baghouse system is not directly monitored, but can be estimated from the blast air, oxygen and afterburner air addition rates. During testing, the combined flow rate of offgas was also measured by the test crew at the final stack sampling location. The plant also records the amount of each type of material added to the cupola by the automatic skip buckets for each charge load. The composition of a typical charge is given in Table 3.1 and contains approximately four tons of iron. The iron includes remelt from the foundry, steel scrap, and pig iron.

3.2.2 Pouring, Cooling and Shakeout

The plant has four lines for pouring, cooling, and shakeout. Silica sand, bentonite, and seacoal constitute the molding sand, which is recycled about 50 times prior to disposal in a monofill. Resins and a catalyst are used to produce warmbox cores. Some of the company's cast products use cores, and others do not. During the source test, cores were not being used on any of the lines. The lines are all similar except that Line 4, which is designed to handle larger molds, has an automatic pouring station and the other lines do not. Line 4 is typically used for casting the larger size parts.

TABLE 3.1

TYPICAL CUPOLA CHARGE MATERIALS

Material	Typical range (lbs/charge)[a]
Remelt from foundry[b]	3,500 to 4,500
Steel scrap[b]	3,200 to 4,000
Pig iron[b]	600 to 1,400
Silicon bricks	70 to 105
Blend bricks (Si, Mn, Cr)	260 to 300
Silicon carbide	210 to 250
Coke	500 to 900
Limestone	280 to 300

[a] Typical range observed during the test days.
[b] Remelt, steel scrap, and gray iron bricks are the sources of iron and total 8,700 lbs (4.35 tons) per charge.

Pouring emissions are not captured at any of the four pouring stations. Cooling emissions are captured by hoods that cover the entire cooling line prior to shakeout. The shakeout operation is totally enclosed and evacuated to capture the emissions. After shakeout, the parts are transferred to a casting cooling house where they are placed on a metal "tree." The parts then proceed to a "spinner house" and are shot blasted to remove residual sand. The spinner house is also evacuated to the duct that removes emissions from shakeout. The captured emissions from shakeout and cooling are sent to a baghouse for gas cleaning. There are three baghouse systems; each system predominantly receives emissions vented from a single line, but a few of the vents from a given line are routed to another line's baghouse system. Consequently, controlled emissions represent contributions from multiple lines and multiple processes.

The ductwork for the cooling lines are interconnected with either other cooling lines or shakeout enclosure ductwork. Therefore, it is impossible to get a representative sample for cooling emissions that could be attributed to an entire cooling line. The least amount of interconnection was on Line 4, so it was selected for emissions testing. The first third of the cooling section of Line 4 was ducted to a single vent that had a long, straight vertical section before connecting with other ductwork. Ports were installed in this straight section of the vent, so that the uncontrolled emissions from the first third (approximately 20-25 minutes) of the cooling line could be measured. The shakeout enclosure ductwork has a short vertical rise, then elbows to a horizontal section where it is tied to the vent from the spinner housing and the last hood from the cooling line. Ports were installed in the short vertical duct from the

shakeout enclosure approximately one foot above the roof of the enclosure prior to the point where the ducts from the spinner house and the end of the cooling line join the shakeout enclosure duct. This point represents uncontrolled emissions from the shakeout operations.

3.3 SUMMARY OF PROCESS OPERATING DATA COLLECTED DURING SOURCE TEST

3.3.1 Process Operating Data for Cupola Melting Operations

Testing of the melting operations was conducted over a three-day period. Single test runs were performed on September 8th and 9th, and two runs were performed on September 10th. During testing, process information was collected from the operating room's computer control panel. Process information collected included cupola charging data, process chemistry, gas flow rates, temperatures, baghouse pressure drop, and cupola stack opacity.

Table 3.2 and Figure 3.2 present metal charging rates for the cupola during the three days of testing. Table 3.2 and Figure 3.2 show that the average metal production rate for September 8th was higher than on the 9th or 10th. Table 3.2 and Figure 3.2 also show that hourly production rates varied significantly within a given day.

Table 3.3 presents average gas flow rates and temperatures for several locations in the cupola flue gas system on September 8th, 9th, and 10th. As can be seen from Table 3.3, the average blast rate was lowest on September 9th, and the cupola typically operated with oxygen addition on that day. On September 8th and 10th, the average blast rate was higher, and oxygen addition was not used. The average baghouse pressure drop was lower on September 9th than on September 8th or 10th, (2.8 inches of water versus 4.4 inches of water), and the average opacity was higher on September 9th than September 10th (5.7% versus 2.8%).

Continuous records of blast air flow rates are presented in Figure 3.3. Blast air rates were significantly reduced (i.e., the cupola was placed "on relief") for varying lengths of time on September 9th and 10th. The specific times when the cupola was on relief are listed in Table 3.4

Table 3.5 presents average process iron chemistry values (from cupola) for September 9th and 10th. Although process chemistry values were not recorded on September 8th, average trace metal impurity levels were typical on all three days.

3.3.2 Process Operating Data for Pouring, Cooling and Shakeout Operations

Emissions from cooling (first third section) and shakeout were measured on September 5, 1997. Line 4 employs an automated molding machine. Testing was conducted only when the entire mold line was filled with recently poured molds. During the day of the source test of the cooling and shakeout operations, Line 4 was used to cast brake drums. Each mold produced two brake drums, and used 189 pounds of poured metal. For the test day,

TABLE 3.2

SUMMARY OF CUPOLA CHARGING DURING THE TEST DAYS

9/08/97		9/09/97		9/10/97	
Time period	Tons charged	Time period	Tons charged	Time period	Tons charged
				7:01-7:56	48
		8:01-8:56	47	8:03-8:54	35
		9:01-9:56	52	9:01-9:59	49
		10:02-10:46	42	10:04-10:55	47
11:02-11:57	45	11:03-11:50	35	11:01-11:57	54
12:00-12:54	56	12:00-12:51	26	12:03-12:59	59
13:00-13:58	59	13:00-13:56	58	13:03-13:41	40
14:03-14:55	51	14:06-14:55	30	14:02-14:58	35
15:00-15:57	55			15:01-15:28	32
				16:13-16:56	45
				17:00-17:56	51
				18:01-18:57	56
				19:02-19:58	55
Average rate (tons/hr)	53.2	Average rate (tons/hr)	41.4	Average rate (tons/hr)	46.6

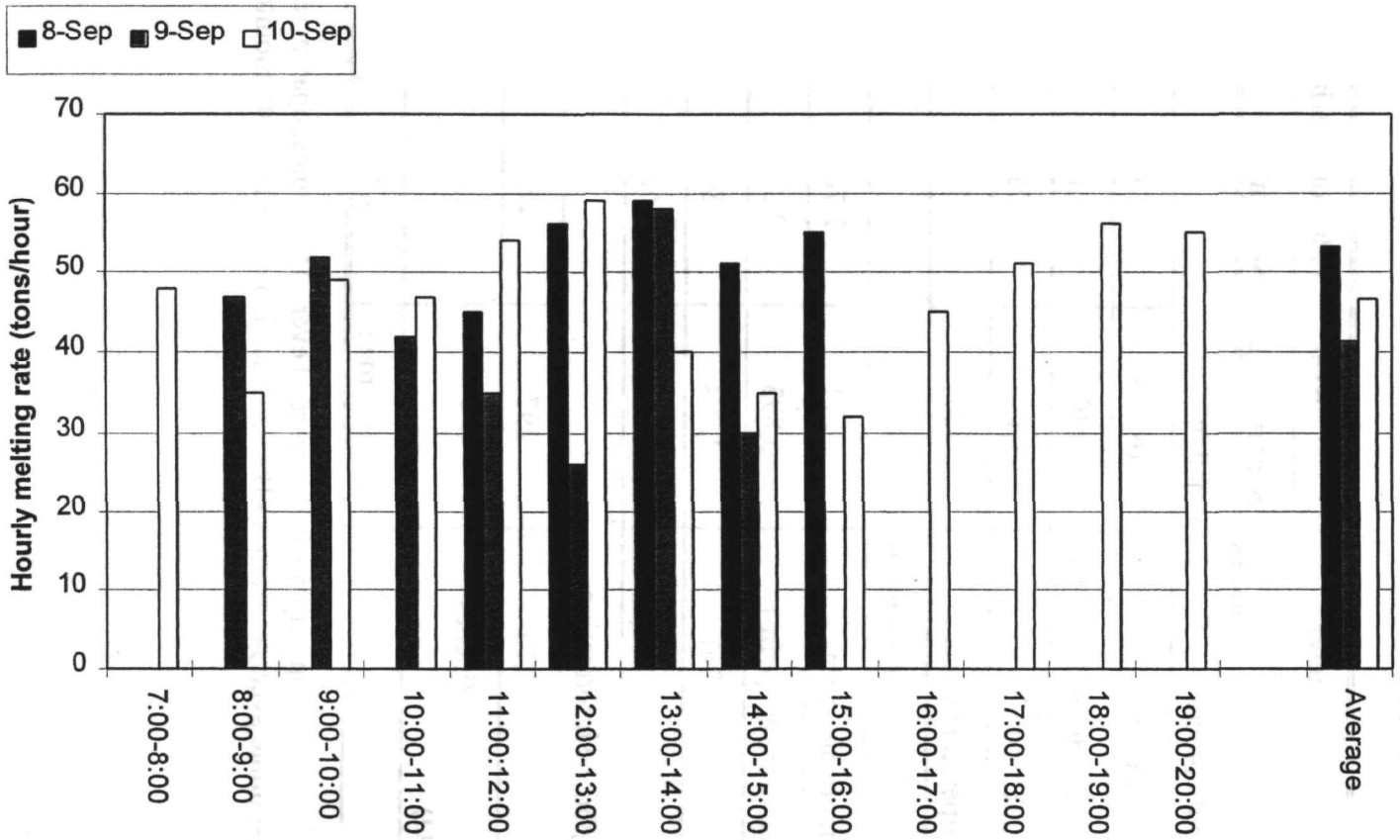

Figure 3.2. Hourly Melting Rates During Cupola Testing

TABLE 3.3

PROCESS DATA DURING THE DAYS OF CUPOLA TESTING

Process Parameter	Average Value on Testing Date		
	September 8	September 9	September 10
Cupola process air flow information			
Blast rate (scfm)	14,794	9,131	13,665
Oxygen addition (on/off)	off	on	off
Temperature in (F)	1,156	1,067	1,101
Temperature out (F)	330	232	297
Afterburner air flow information			
Primary air (scfm)	5,271	2,764	4,969
Secondary air (scfm)	5,893	2,823	5,476
Cooling air (scfm)	2,794	2,300	2,792
Temperature out (F)	1,717	1,639	1,668
Baghouse information			
Temperature in (F)	297	281	299
Pressure drop (inches H_2O)	4.4	2.8	4.4
Opacity (%)	Not Recorded	5.7†	2.8†

†Average of opacity readouts recorded every 15 minutes; opacity readouts are 6-minute averages from KVB EPA-2 stack mounted opacity monitor

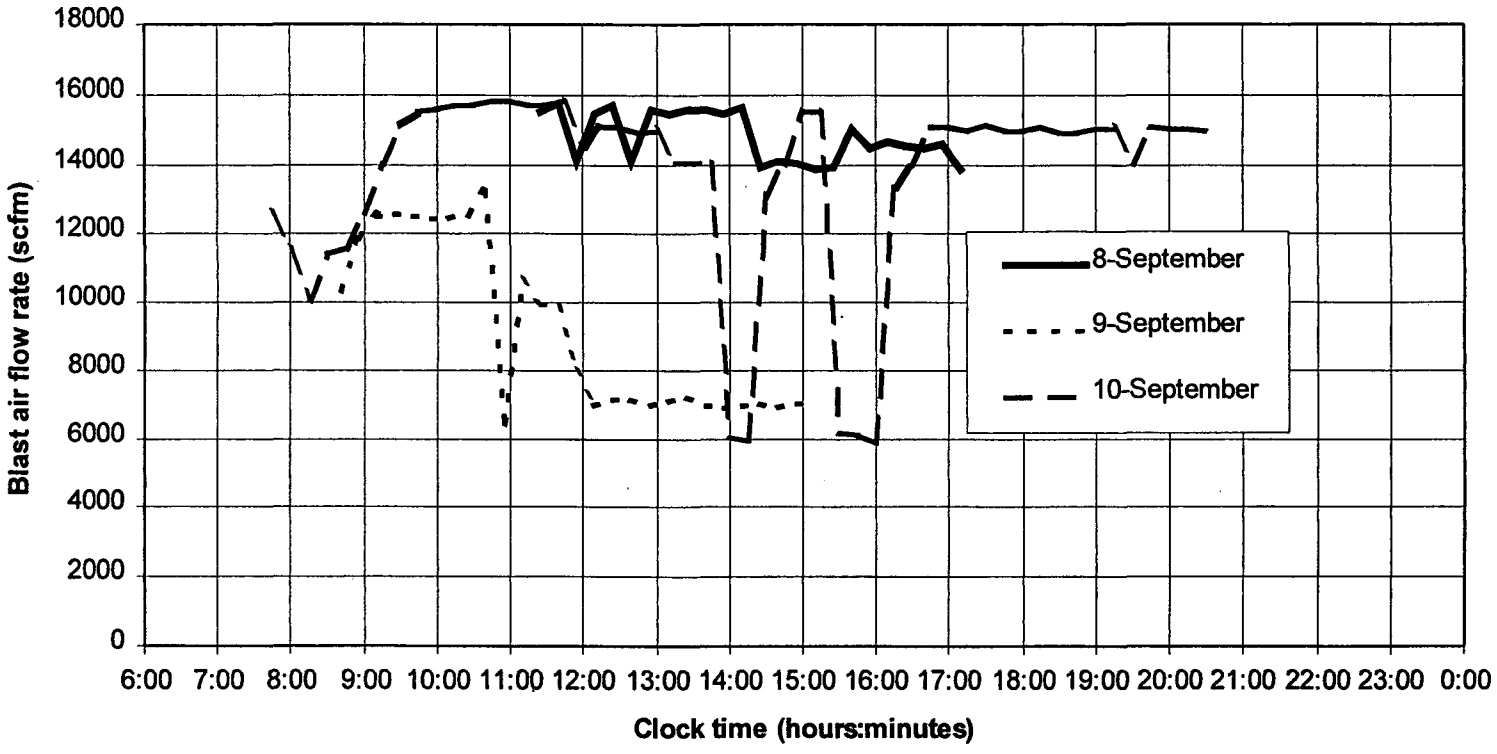

Figure 3.3. Blast Air Flow Rate Through Cupola

TABLE 3.4

PERIODS WHEN CUPOLA WAS "ON RELIEF" DURING TESTING.

September 8	September 9	September 10
Continuous blast	10:54 - 11:09	13:51 - 14:04
		14:11 - 14:28
		15:27 - 16:03
		16:06 - 16:08

TABLE 3.5

PROCESS IRON CHEMISTRY AT CUPOLA.[a]

Element	Concentration (%)	
	September 9	September 10
ElCe (Elemental Carbon Equivalents)	3.665	4.045
Calc C (Calculated Carbon)	2.470	3.450
Si	1.050	4.490
Mn	0.350	0.595
P	0.055	0.042
S	0.070	0.090
Ni	0.045	0.090
Mo	0.105	0.025
Cr	0.205	0.240
Cu	0.114	0.230
Al	0.008	0.009
Ti	0.009	0.011
Sn	0.005	0.009
Mg	0.006	0.001
V	0.006	0.011
Pb	0.001	0.002

[a] The process chemistry values reported here are considered typical; the process chemistry values were not specifically recorded on September 8, but were also considered typical.

249 molds per operating hour were produced. Each mold contains 1393 lbs of green sand (lake sand, sea coal, and bentonite), so the molds had a sand to metal ratio of 7.35:1.

The properties of the molding sand measured during the test day are given in Table 3.6. A bonding agent was added to the sand in the amount of 38.1 pounds of bond per ton of sand mulled. The bonding agent is a dry mixture of coal, brittle asphalt, cellulose, bentonite, starch, and cereal. The material safety data sheet for the product indicates no volatile components, and no hazardous ingredients other than coal dust and crystalline quartz.

TABLE 3.6

TYPICAL RESULTS FROM GREEN SAND ANALYSIS

Property	Value
Moisture (%)	3.5
Clay (%)	8.7
Loss on ignition (%, at 1800°F)	7.8
Volatile content (%, at 900°F)	4.0

4.0 SAMPLING LOCATIONS

Isokinetic source sampling was conducted at the inlet and outlet of the cupola baghouse at the Waupaca Foundry. Descriptions of the sampling locations are presented below, as well as schematic diagrams.

4.1 CUPOLA BAGHOUSE INLET

The cupola baghouse inlet measurement site was located in a 55⅜-inch inside diameter (ID) round, horizontal duct 50 feet (10.8 duct diameters) downstream of the nearest flow disturbance (45° bend) and 23 feet 9½ inches (5.2 duct diameters) upstream of the nearest flow disturbance (90° elbow). According to EPA Method 1 criteria this site required a minimum of 12 sample traverse points, six along each of two perpendicular diameters. Figure 4.1 shows a simplified schematic of the baghouse inlet measurement site. Figure 4.2 shows the sample traverse point locations. A check for the presence of non-parallel flow was conducted as specified in Section 2.4 of EPA Method 1. The check confirmed the average yaw angle for the horizontal port was 13.8 degrees, which is less than the Method 1 requirement of 20 degrees.

4.2 CUPOLA BAGHOUSE OUTLET

The baghouse outlet sampling location was located in a 92-inch ID round vertical stack 25 feet (3.3 stack diameters) downstream of the nearest flow disturbance (expansion joint) and 89 feet (11.6 stack diameters) upstream of the stack exit. According to EPA Method 1, this location required 24 sample traverse points, 12 along each of two perpendicular diameters. Six points were sampled, at each of four sample ports, located at 90°. Figure 4.3 shows a simplified schematic of the baghouse outlet measurement site. Figure 4.4 shows the sample traverse point locations.

PES checked for the presence of non-parallel flow in all four sampling ports during a preliminary site visit and just prior to sampling. The average of the 24 sampling points yaw angles was found to be 15.3 degrees, requiring no modifications for isokinetic sampling.

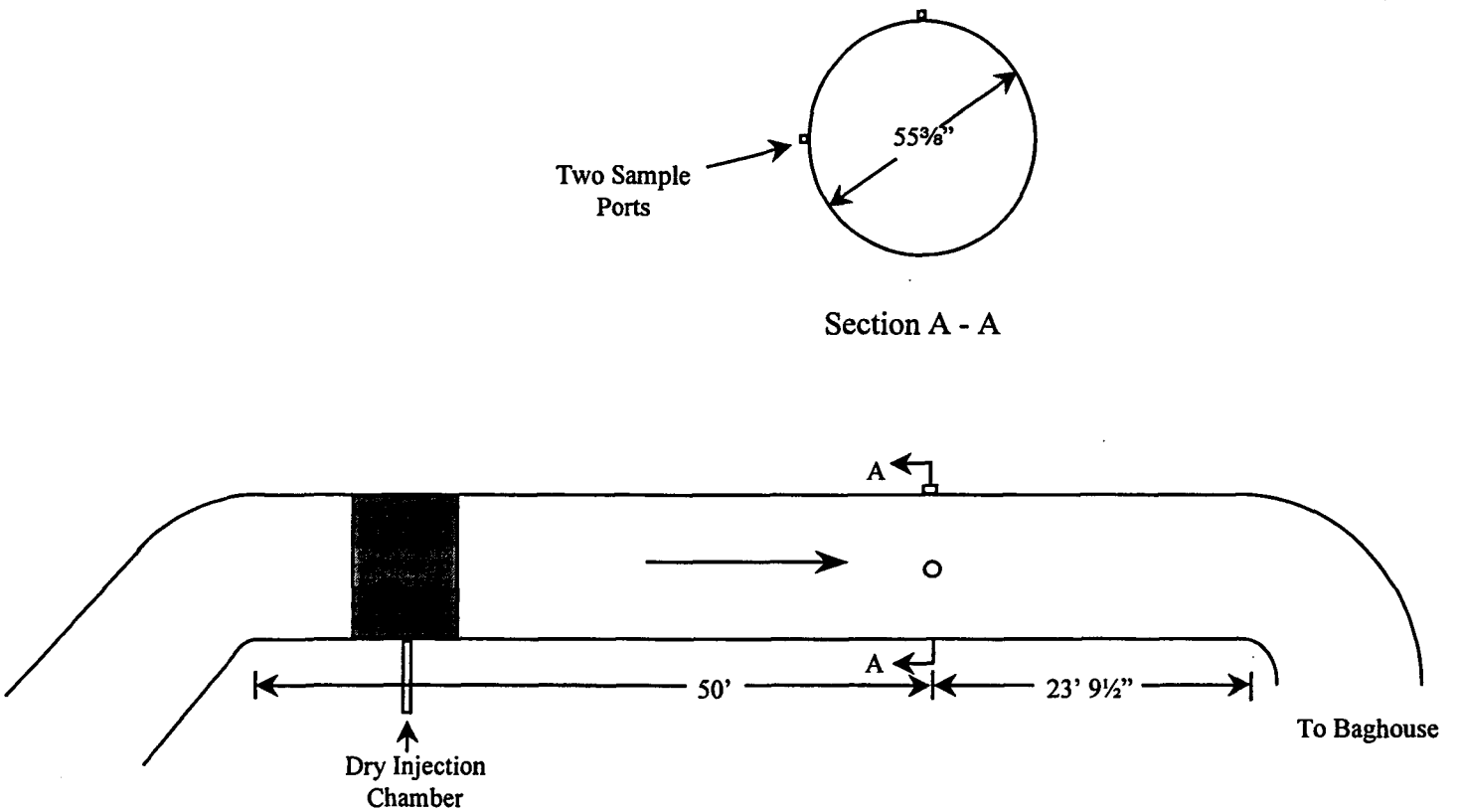

Figure 4.1 Cupola Baghouse Inlet Sampling Location, The Waupaca Foundry - Tell City, Indiana

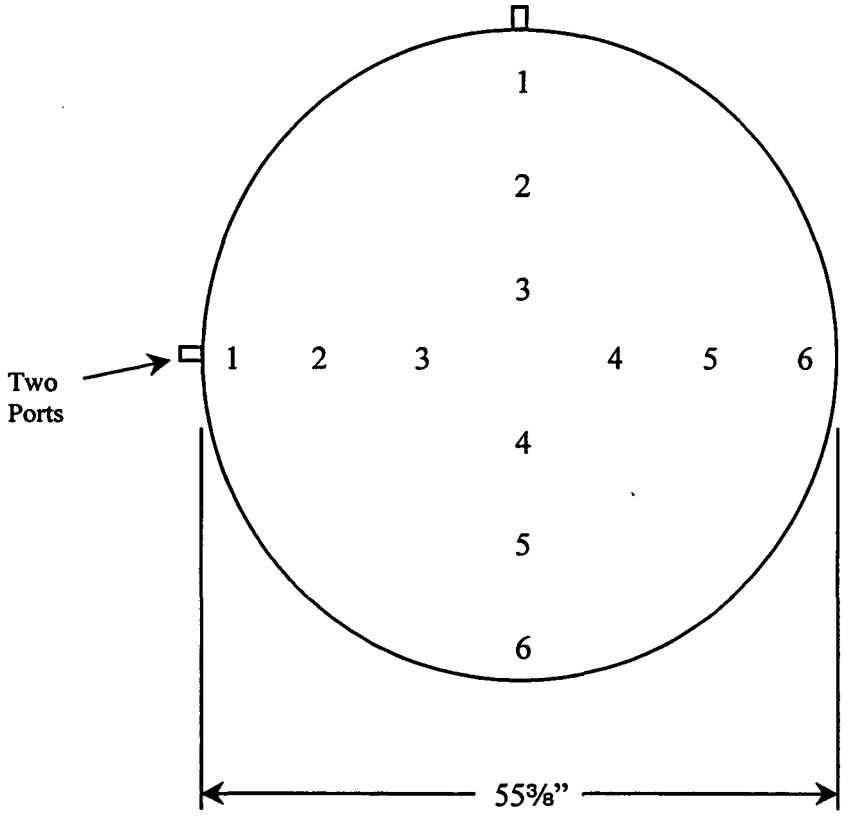

Section A - A

Traverse Point Number	Distance from Stack Wall, inches
1	2 ½
2	8 ⅛
3	16 ⅜
4	39
5	47 ¼
6	52 ⅞

Figure 4.2 Cupola Baghouse Inlet Traverse Point Locations, The Waupaca Foundry - Tell City, Indiana

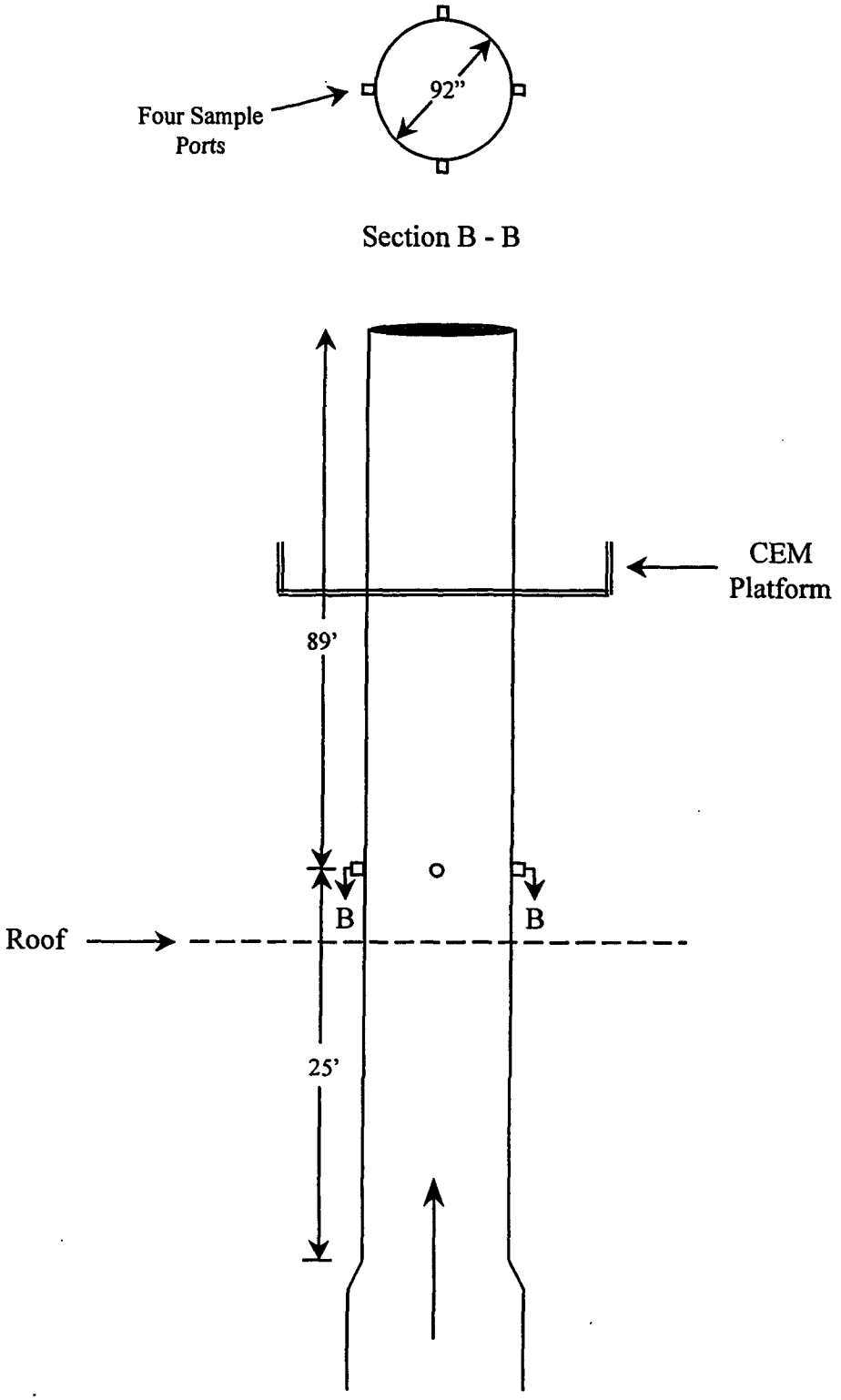

Figure 4.3 Cupola Baghouse Outlet Sampling Location, The Waupaca Foundry - Tell City, Indiana

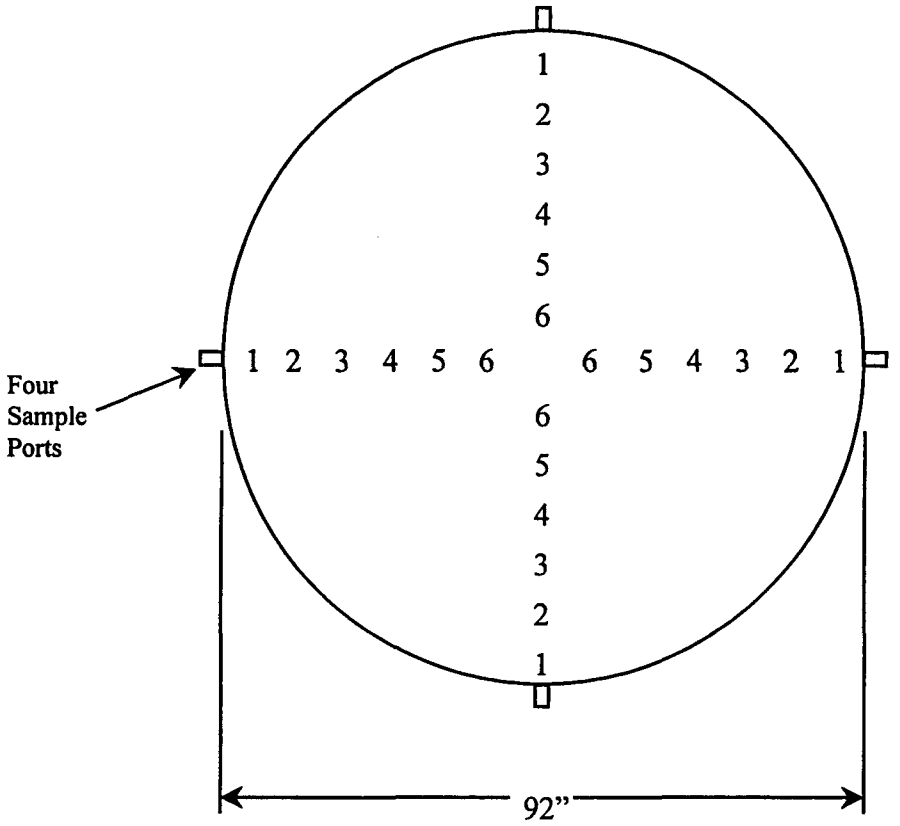

Section B - B

Traverse Point Number	Distance from Stack Wall, inches
1	$1\,^{7}/_{8}$
2	$6\,^{3}/_{16}$
3	$10\,^{7}/_{8}$
4	$16\,^{5}/_{16}$
5	23
6	$32\,^{13}/_{16}$

Figure 4.4 Cupola Baghouse Outlet Traverse Point Locations, The Waupaca Foundry - Tell City, Indiana

5.0 SAMPLING AND ANALYTICAL PROCEDURES

Table 5.1 summarizes the sources, test parameters, test methods, number of tests, and net run times. Simultaneous, isokinetic, sampling was conducted at the cupola baghouse inlet and outlet for PM/metals. Simultaneous with the PM/metals testing, additional isokinetic sampling was conducted at the cupola baghouse outlet for PCDDs/PCDFs and SVOHAPs. Brief descriptions of the methods used follow:

5.1 LOCATION OF MEASUREMENT SITES AND SAMPLE/VELOCITY TRAVERSE POINTS

EPA Method 1, "Sample and Velocity Traverses for Stationary Sources," was used to select the measurement sites and to establish velocity and sample traverse point locations. The location of measurement sites and traverse points are discussed in Section 4.0.

5.2 DETERMINATION OF STACK GAS VOLUMETRIC FLOW RATE

EPA Method 2, "Determination of Stack Gas Velocity and Volumetric Flow Rate (Type S Pitot Tube)," was used to determine stack gas volumetric flow rate at the cupola baghouse inlet and outlet. A Type S pitot tube, constructed according to Method 2 criteria and having an assigned coefficient of 0.84 and connected to an inclined-vertical manometer was used to measure velocity pressure. A calibrated Type K thermocouple attached directly to the pitot tube was used to measure stack gas temperature. The average stack gas velocity was calculated from the average square roots of the velocity pressure, average stack gas temperature, stack gas molecular weight, and absolute stack pressure. The volumetric flow rate is the product of velocity and the stack cross-sectional area.

5.3 DETERMINATION OF DRY MOLECULAR WEIGHT AND EMISSION CORRECTION FACTORS

EPA Method 3B, "Gas Analysis for the Determination of Emission Rate Correction Factor or Excess Air," was used to measure carbon dioxide and oxygen content of the stack gases. Gas samples were extracted from the stack or duct simultaneous with the EPA Method 23 sample trains using the multi-point, integrated bag sampling technique. The bag contents were analyzed on-site within four hours after sample collection using an Orsat® analyzer to

TABLE 5.1

SOURCES, TEST PARAMETERS, AND TEST METHODS SUMMARY
THE WAUPACA FOUNDRY - TELL CITY, INDIANA

Source	Parameter	Test Methods	No. of Tests	Net Run Time, Minutes
Cupola Baghouse Inlet	Flow Rate	EPA 1 & 2	3	240
	O_2/CO_2	EPA 3B	3	240
	Moisture	EPA 4	3	240
	PM/Metals	EPA 29	3	240
Cupola Baghouse Outlet	Flow Rate	EPA 1 & 2	3	240
	O_2/CO_2	EPA 3B	3	240
	Moisture	EPA 4	3	240
	PM/Metals	EPA 29	3	240
	PCDDs/PCDFs	EPA 23	3	240
	SVOHAPs	SW-846 0010	3	240

determine percent concentrations of carbon dioxide and oxygen. The Orsat® analyzer had 0.1 percent subdivisions.

5.4 DETERMINATION OF STACK GAS MOISTURE CONTENT

EPA Method 4, "Determination of Moisture Content in Stack Gases," was used to determine stack gas moisture content. The quantity of condensed water was determined gravimetrically and then compared to the total volume of gas sampled to determine the volume percent moisture content. The Method 4 procedure was conducted in conjunction the EPA Methods 23 and 29 and SW-846 Method 0010 sampling runs. Condensed moisture was determined by the difference in pre-test and post-test weights of the impingers, reagents, and silica gel. Condensed moisture in the XAD® adsorbent trap from the SW-846 Method 0010 and EPA Method 23 sample trains was also determined gravimetrically and the results included in the moisture content calculations.

5.5 DETERMINATION OF PARTICULATE MATTER AND METALS

EPA Method 29, "Determination of Metals Emissions From Stationary Sources," was used to determine filterable particulate matter and metals at the cupola baghouse inlet and outlet. The target metals included: antimony (Sb), arsenic (As), barium (Ba), beryllium (Be), cadmium (Cd), chromium (Cr), cobalt (Co), lead (Pb), manganese (Mn), mercury (Hg), nickel (Ni), phosphorus (P), selenium (Se), silver (Ag), thallium (Tl), and zinc (Zn). Multi-point integrated samples were extracted isokinetically from the 12 traverse points at the inlet and 24 traverse points at the outlet as shown in Figures 4.2 and 4.4, respectively. At each traverse point, sampling was performed for 10 minutes at the inlet and five minutes at the outlet for a total run time of 240 minutes per test. At each location, readings were taken every five minutes. The samples were extracted through a glass nozzle, a heated glass-lined probe, a heated quartz fiber filter, two impingers containing an acidic hydrogen peroxide solution (H_2O_2/HNO_3), an empty impinger, and two impingers containing acidic potassium permanganate ($KMnO_4$). A schematic of the EPA Method 29 sampling train is shown in Figure 5.1. The inlet sampling train was modified to allow for vertical sampling. A heated Teflon® jumper was used between the probe exit and the heated filter. The nozzle was attached to the probe using Teflon® or Teflon® coated unions and Teflon® or graphite ferrules.

The sample recovery scheme for metals is shown in Figure 5.2. Note that the optional empty first impinger was not used.

The filter and acetone rinses of the probe and front half of the filter housing were analyzed gravimetrically in the PES laboratory to determine filterable particulate matter. Upon completion of the particulate matter analyses, the particulate fractions and aqueous fractions were submitted to TLI for metals analyses. The sample preparation and analysis scheme is shown in Figure 5.3. Metals other than Hg were analyzed by graphite furnace

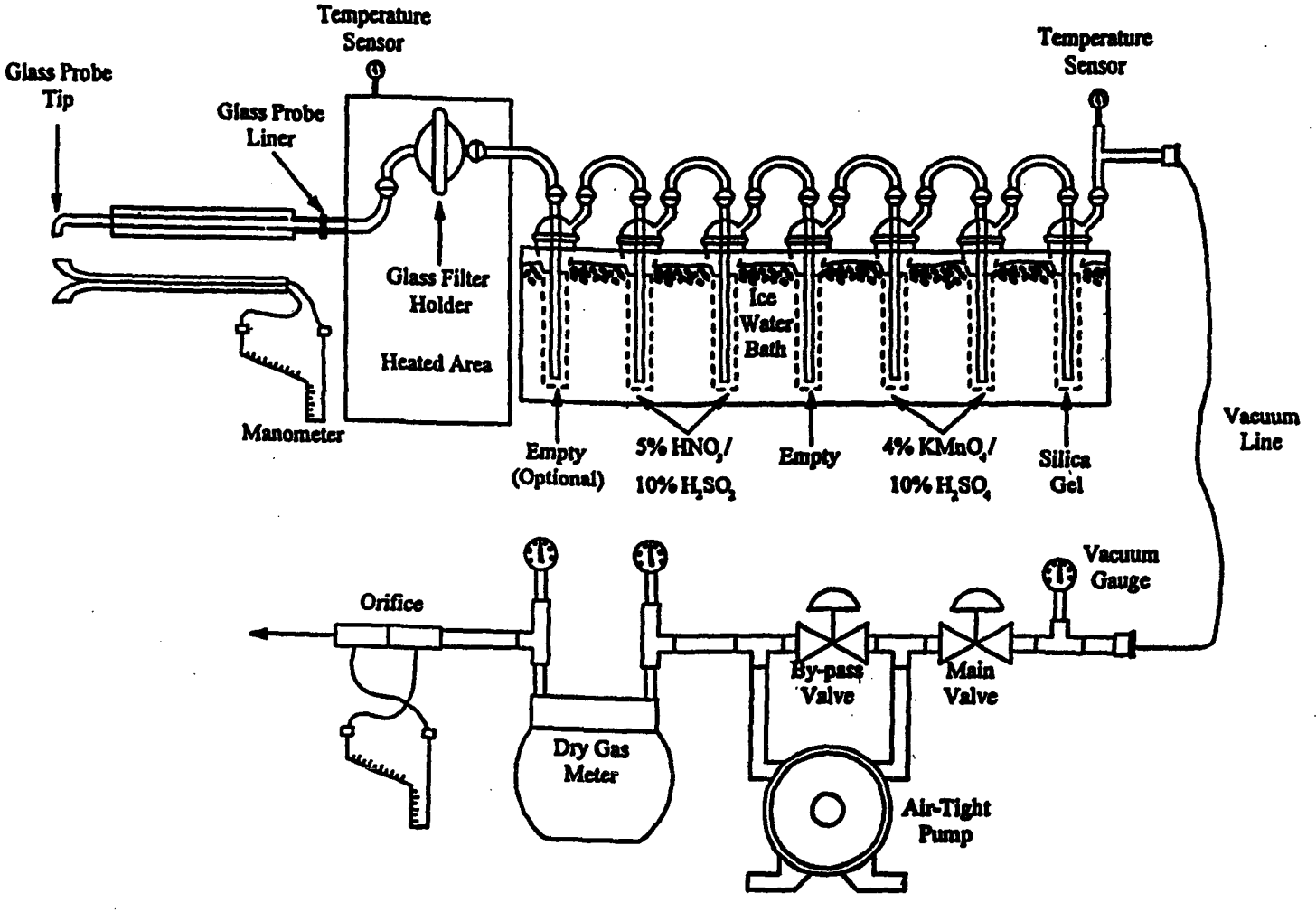

Figure 5.1 Sampling Train Schematic for EPA Method 29.

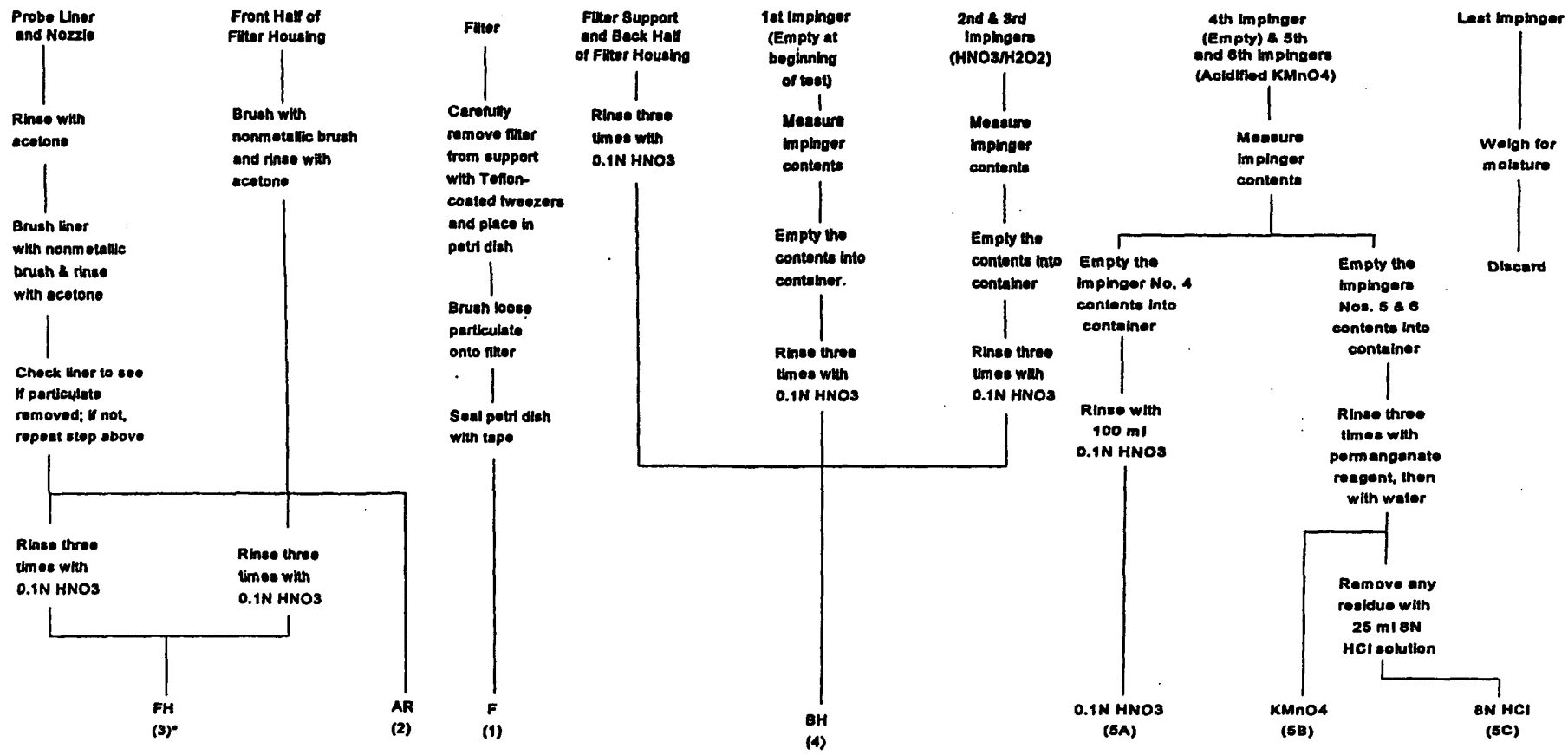

* Number in parentheses indicates container number

Figure 5.2 EPA Method 29 Recovery Scheme.

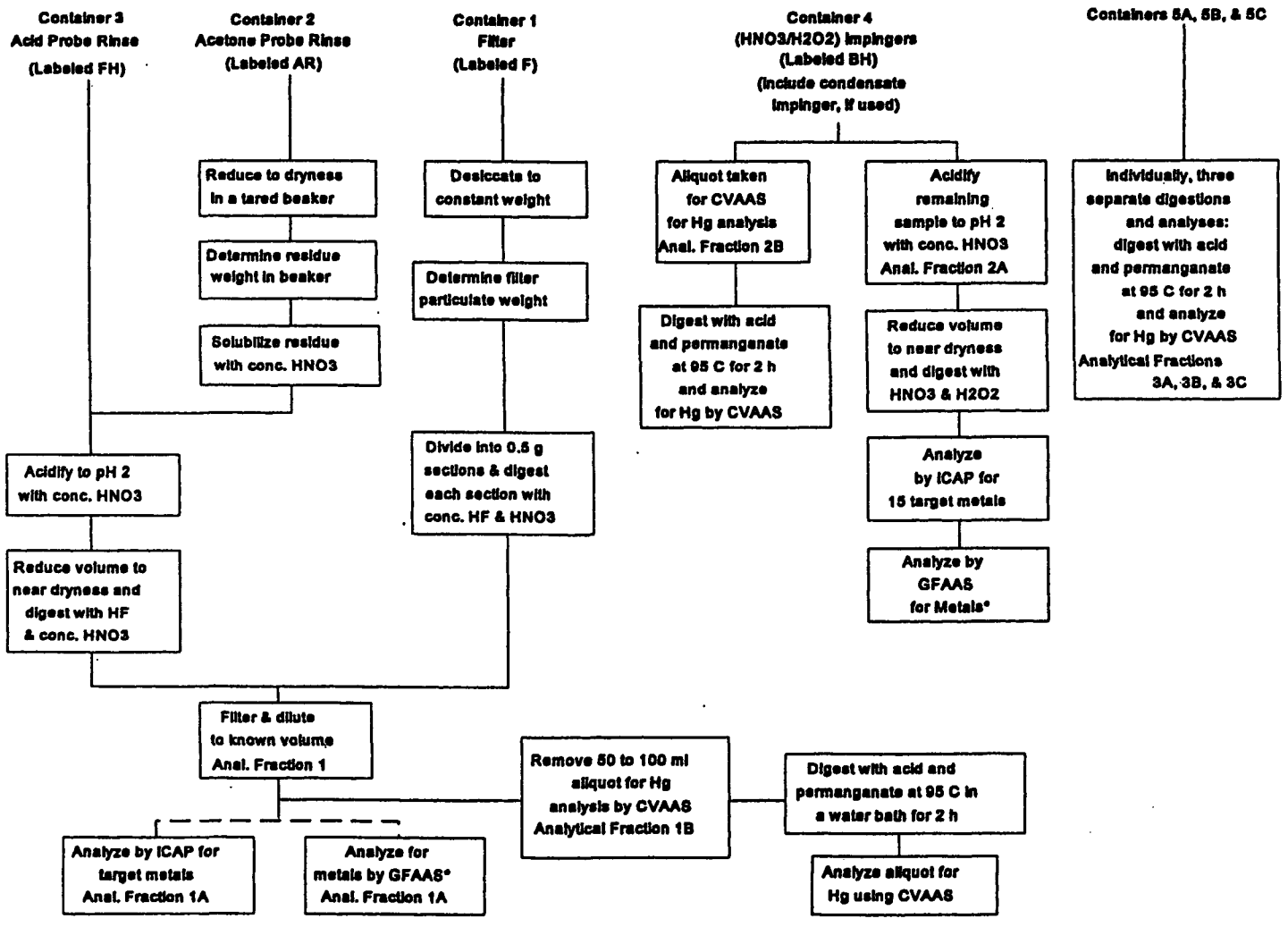

*Analysis by AAS for metals found at less than 2 ug/ml in digestate solution, if desired. Or analyze for each metal by AAS, if desired.

Figure 5.3 Sample Preparation and Analysis Scheme for EPA Method 29.

atomic absorption spectroscopy (GFAAS) or inductively coupled argon plasma (ICP) emission spectroscopy. Hg was analyzed by cold vapor atomic absorption spectroscopy (CVAAS).

5.6 DETERMINATION OF DIOXINS AND FURANS

EPA Method 23, "Determination of Polychlorinated Dibenzo-*p*-Dioxins and Polychlorinated Dibenzofurans from Stationary Sources" was used to determine PCDDs/PCDFs at the cupola baghouse outlet. The proposed rules amending EPA Method 23, as published in the Federal Register, Volume 60, No. 104, May 31, 1995, were incorporated. The proposed changes correct existing errors in the method, eliminate the methylene chloride rinse, and clarify the quality assurance requirements of the method. Samples were extracted through a glass nozzle, a heated glass-lined probe, a pre-cleaned and heated glass fiber filter, a water cooled condenser coil and an adsorbent trap containing approximately 40 grams of XAD®-2 adsorbent resin. A schematic of the EPA Method 23 sampling train (which is the identical to the SW-846 Method 0010 train) is shown in Figure 5.4. Multi-point integrated samples were extracted isokinetically from the 24 traverse points shown in Figure 4.4. At each traverse point, sampling was performed for 10 minutes, with pertinent readings taken every five minutes, for a net run time of 240 minutes per test. TLI prepared the filters and adsorbent traps, and performed the required analyses.

5.7 DETERMINATION OF SEMIVOLATILE ORGANIC HAZARDOUS AIR POLLUTANTS (SVOHAPs)

Method SW-846 0010, "Modified Method 5 Sampling Train (MM5)," was used to collect SVOHAPs at the cupola baghouse outlet. Multi-point, integrated samples were extracted isokinetically from the 24 traverse points shown in Figure 4.4. At each traverse point, sampling was performed for 10 minutes for a total run time of 240 minutes per test. Readings were taken every five minutes. The SW-846 Method 0010 samples were extracted through a glass nozzle, a heated glass-lined probe, a precleaned and heated glass fiber filter, a water-cooled condenser coil and a adsorbent trap containing approximately 40 grams of XAD®-2 adsorbent resin. A schematic of the SW-846 Method 0010 sampling train is shown in Figure 5.4.

The SW-846 Method 0010 samples were extracted following the procedure of Method 3542, dated January, 1995. The extracts were analyzed in accordance with the guidelines of Method 8270A by High Resolution Gas Chromatography/Low Resolution Mass Spectrometry. The three sample fractions for each test run, i.e., front half extract, the back half extract (XAD®-2 and back half rinse), and the condensate extract were combined for one analysis, per test run. The samples were analyzed for the SW-846 Method 8270 polynuclear aromatic hydrocarbon (PAH) and Clean Air Act (CCA) semivolatile compounds.

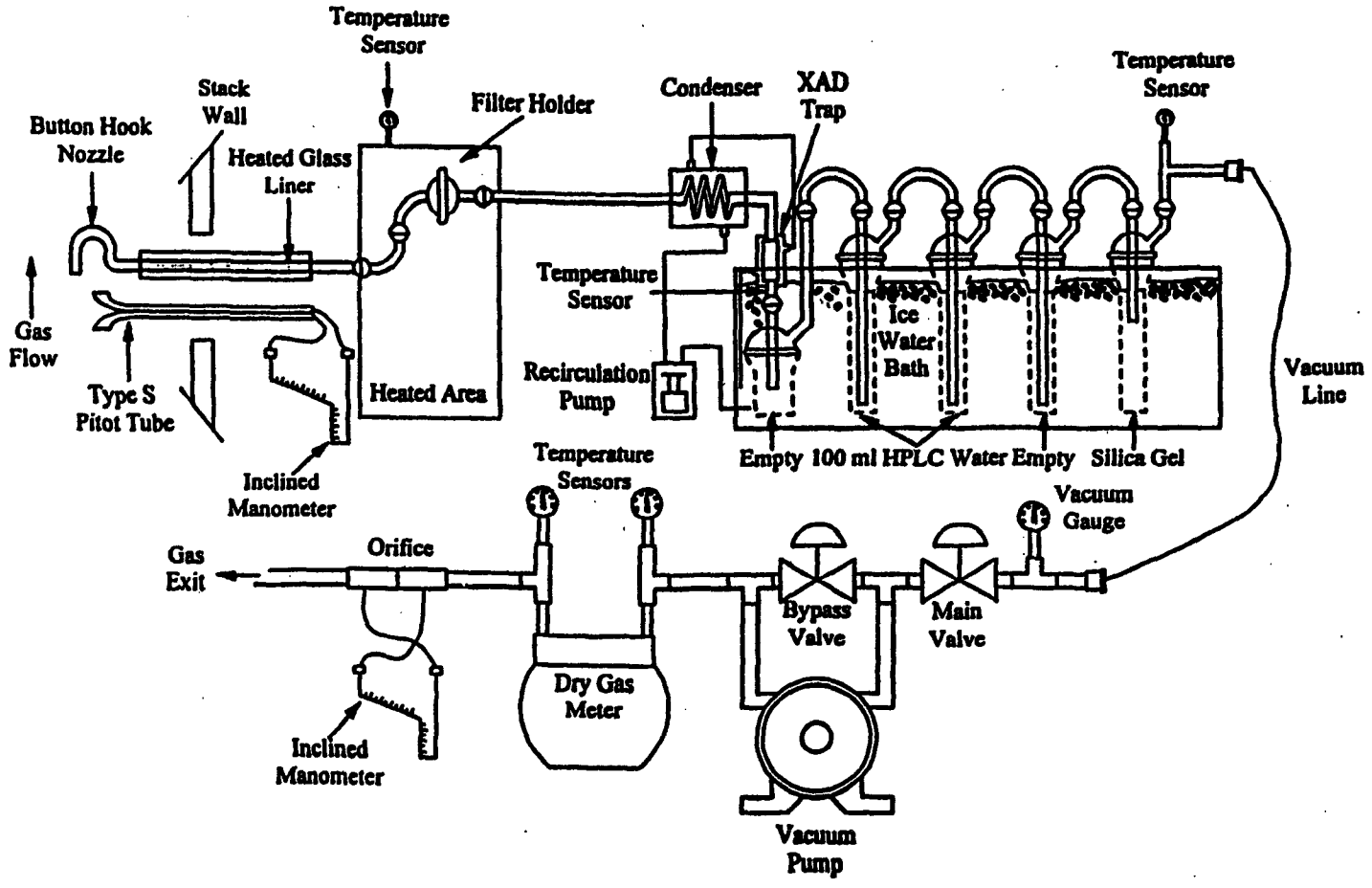

Figure 5.4 Sampling Train Schematic for EPA Method 23 and SW-846 Method 0010.

6.0 QUALITY ASSURANCE/QUALITY CONTROL PROCEDURES AND RESULTS

This section describes the specific QA/QC procedures employed by PES in performing this series of tests. The procedures contained in the "Quality Assurance Handbook for Air Pollution Measurement Systems, Volume III, Stationary Source Specific Methods," EPA/600/R-94/038c, and in the reference test methods served as the basis for performance for all testing and related work activities in this project.

6.1 CALIBRATION OF APPARATUS

The preparation and calibration of source sampling equipment is essential in maintaining data quality. Brief descriptions of the calibration procedures used by PES follow.

6.1.1 Barometers

PES used aneroid barometers which are calibrated against a station pressure value reported by a nearby National Weather Service Station corrected for elevation.

6.1.2 Temperature Sensors

Bimetallic dial thermometers and Type K thermocouples were calibrated using the procedure described in Section 3.4.2 of the Quality Assurance Handbook, Volume III, 1994. Each temperature sensor was calibrated over the expected range of use against an ASTM 3C or 3F thermometer. Table 6.1 summarizes the type of calibrations performed, the acceptable levels of variance, and the results. Digital thermometers were calibrated using a thermocouple simulator having a range of 0-2400°F.

6.1.3 Pitot Tubes

Type S pitot tubes constructed to EPA Method 2 specifications were used. Pitot tubes meeting these specifications are assigned to a baseline coefficient to 0.84 and need not be calibrated. The dimensional criteria and results for each pitot tube used are summarized in Table 6.2.

TABLE 6.1

SUMMARY OF TEMPERATURE SENSOR CALIBRATION DATA

Temp. Sensor I.D.	Usage	Temperature, °F		Temperature Difference	Tolerances
		Reference	Sensor		
5C	Stack Gas	38	38	0.0%	<±1.5%
		102	101	0.2%	<±1.5%
		168	169	-0.2%	<±1.5%
4B	Stack Gas	32	31	0.2%	<±1.5%
		70	72	-0.4%	<±1.5%
		203	204	-0.2%	<±1.5%
		440	438	0.2%	<±1.5%
4C	Stack Gas	32	34	-0.4%	<±1.5%
		73	71	0.4%	<±1.5%
		191	190	0.2%	<±1.5%
		434	430	0.5%	<±1.5%
T5B	Stack Gas	32	32	0.0%	<±1.5%
		72	71	0.2%	<±1.5%
		199	201	-0.3%	<±1.5%
		408	412	-0.5%	<±1.5%
RMB-13	Meter Box Inlet	34	35	1 °F	<±5 °F
		76	76	0 °F	<±5 °F
		150	149	1 °F	<±5 °F
	Outlet	34	35	1 °F	<±5 °F
		76	75	1 °F	<±5 °F
		150	151	1 °F	<±5 °F
MB-13	Meter Box Inlet	31	32	1 °F	<±5 °F
		70	70	0 °F	<±5 °F
		145	147	2 °F	<±5 °F
	Outlet	32	31	-1 °F	<±5 °F
		70	70	0 °F	<±5 °F
		150	151	1 °F	<±5 °F

TABLE 6.2

SUMMARY OF PITOT TUBE DIMENSIONAL DATA

Measurement	Criteria	Results			
		Pitot Tube Identification			
		5C	5E	4B	4C
$\alpha 1$	<10°	2.5	0	2	4
$\alpha 2$	<10°	-2.5	1	1	4
$\beta 1$	<5°	1	2	0	1
$\beta 2$	<5°	1	3	1	0
γ	-	2.5	1	0	0
θ	-	0	0	1	0
A	-	1.013	1.104	0.947	0.956
Z	≤ 0.125 in.	0.044	0.019	0	0
W	≤ 0.03125 in.	0	0	0.017	0
D_t	0.1875" ≤ D_t ≤ 0.375"	0.370	0.375	0.375	0.375
$A/2D_t$	1.05 D_t ≤ A≤ 1.50 D_t	1.37	1.47	1.26	1.27
Acceptable		Yes	Yes	Yes	Yes
Assigned Coefficient		0.84	0.84	0.84	0.84

6.1.4 Differential Pressure Gauges

PES used Dwyer inclined/vertical manometers to measure differential pressures. The differential pressures measurements included velocity pressure, static pressure, and meter orifice pressure. Manometers are selected with sufficient sensitivity to accurately measure pressures over the entire range of expected values. Manometers are primary standards and require no calibration.

6.1.5 Dry Gas Meters and Orifices

The SW-846 Method 0010 and EPA Method 23 and 29 dry gas meters and orifices were calibrated in accordance with Sections 5.3.1 and 5.3.2 of EPA Method 5. This procedure involves direct comparison of the dry gas meter to a reference dry test meter. The reference dry test meter is calibrated annually using a wet test meter. Before its initial use in the field, the metering system was calibrated over the entire range of operation as specified in EPA Method 5. After field use, the metering system was calibrated at a single intermediate setting based on the previous field test. Acceptable tolerances for the initial and final dry gas meter factors and orifice calibration factors are ± 0.05 and ± 0.20 from average, respectively. The results for the gas meter and orifice used in this test program are summarized in Table 6.3.

6.2 ON-SITE MEASUREMENTS

The on-site QA/QC activities include:

6.2.1 Measurement Sites

Prior to sampling, the stack and inlet duct were checked dimensionally to determine measurement site locations, location of velocity and sample test ports, inside stack/duct dimensions, and sample traverse point locations. Inside stack/duct dimensions were checked through both traverse axis to ensure uniformity of the stack/duct inside diameter. The inside stack/duct dimensions, wall thickness, and sample port depths were measured to the nearest 1/16 inch.

6.2.2 Velocity Measurements

All velocity measurement apparatus were assembled, leveled, zeroed, and leak-checked prior to use and at the end of each determination. The static pressure was determined at a single point near the center of the stack or duct cross-section.

6.2.3 Flue Gas Composition

Integrated, multi-point, flue gas samples were collected in Tedlar® gas bags from the baghouse inlet and outlet. Prior to use the bags were leak checked and purged with nitrogen to ensure cleanliness. Prior to and after completion of each sampling run the entire sampling

TABLE 6.3

SUMMARY OF DRY GAS METER AND ORIFICE CALIBRATION DATA

Meter No.	Gamma				Orifice Coefficient		
	Pre-test	Post-test	% Diff.	EPA Criteria	Average	Range	EPA Criteria
M5-3	1.028	1.060	3.1	± 5%	1.591	1.555-1.621	1.591 ± 0.20
M5-4	1.021	1.049	2.7	± 5%	1.662	1.653-1.674	1.662 ± 0.20
RMB-13	1.010	0.994	-1.6	± 5%	1.884	1.875-1.894	1.884 ± 0.20
MB-13	0.947	0.945	0.2	± 5%	1.762	1.760-1.765	1.762 ± 0.20

system was leak checked from the tip of the probe. The bag samples were analyzed on-site using an Orsat® analyzer within four hours after sample collection, in accordance with EPA Method 3B. Prior to use the Orsat® analyzer was assembled and replenished with fresh reagents and leak checked using the manufacturer's procedures.

6.2.4 Moisture

The SW-846 Method 0010 and EPA Methods 23 and 29 sampling trains were used to determine the flue gas moisture content. During sampling, the exit gas of the last impinger was maintained below 68°F to ensure complete condensation of flue gas water vapor. The total moisture was determined gravimetrically using an electronic platform balance with 0.1 gram sensitivity. The XAD® adsorbent modules from the EPA Method 23 and SW-846 Method 0010 sampling trains were also weighed and their weights included in the moisture catch.

6.2.5 Method 23, Method 0010 and Method 29

The field sampling QA/QC for EPA Methods 23 and 29 and SW-846 Method 0010 were similar. Table 6.4 summarizes the critical measurements made and the EPA's acceptability criteria. All pre- and post-test sample train leaks met the acceptance criteria. The isokinetic sampling rates deviated by no more than 6.5% thereby meeting each method criteria of 90-110%.

EPA Methods 23 and 29 and SW-846 Method 0010 field blanks were collected near each of the sampling locations to check for any sample contamination at the sites. Sample trains were assembled and pre- and post-test leak checks were conducted. The sample trains were recovered in the same manner as the actual sample runs. Each field blank train was subjected to a minimum of one leak check in the laboratory and three to five at the sampling site, depending on the location.

An acetone blank and quartz fiber filter were taken as control samples for the particulate analysis and subsequent analysis for the target metals. Blanks were taken of the metals absorbing and recovery reagents.

6.3 LABORATORY ANALYSES

6.3.1 Particulate Matter

Particulate matter analysis consisted of front half acetone sample rinses and quartz fiber filters. Prior to the field testing program, the filters were tared in the PES (or DEECO) laboratory, stored in petri dishes, and sealed with Teflon® tape. Several beakers were also cleaned and tared for subsequent use in evaporating the acetone rinses. Upon receipt in the PES laboratory, the acetone rinses were placed in the tared beakers and evaporated to dryness at room temperature. The filters and beakers were desiccated and weighed to a constant

weight. All weighings were within the method requirements of 0.5 milligrams between two consecutive weighings taken at least six hours apart.

6.3.2 EPA Method 29

TLI analyzed the EPA Method 29 samples consisting of five stack gas samples, three blank samples and reagent blanks to determine concentrations of antimony (Sb), arsenic (As), barium (Ba), beryllium (Be), cadmium (Cd), chromium (Cr), cobalt (Co), lead (Pb), manganese (Mn), mercury (Hg), nickel (Ni), phosphorus (P), selenium (Se), silver (Ag), thallium (Tl), and zinc (Zn). All metals, except Hg and some Tl concentrations, were determined by inductively coupled plasma emission spectroscopy (ICP). Thallium concentrations for the back half samples and some front half samples (refer to the TLI case narrative for an exact listing of the samples) were determined using graphite furnace atomic absorption (GFAA). Specific TLI QA/QC activities for GFAA and ICP analyses consisted of: laboratory control spikes, post-digestion matrix spikes of one sample set, duplicate analysis of one sample set, serial dilution and analysis of one sample set, analysis of a method blank, and analysis of field and reagent blanks. Mercury was analyzed by cold vapor atomic absorption spectroscopy (CVAAS). Specific TLI QA/QC activities for CVAAS analyses consisted of analysis of a method blank and analysis of field and reagent blanks. The results of these QA/QC activities are summarized in Tables 6.5 through 6.14. Complete QA/QC data are contained in the TLI analytical report in Appendix C.

6.3.3 EPA Method 23 PCDDs/PCDFs

Prior to the field testing program, TLI prepared PES' XAD®-2 adsorbent traps and precleaned the glass fiber filters. TLI's laboratory QA/QC program consisted of adding isotopically labeled standards to each sample at various stages of the project to determine recovery efficiencies. The following types of standards were used:

Internal Standards were spiked in the TLI laboratory after the field sampling program and prior to sample extraction. Recovery efficiencies for these compounds were used in quantifying the actual PCDDs/PCDFs isomers measured in the samples.

Surrogate Standards were spiked in the TLI laboratory on the XAD®-2 resin prior to the field sampling program. Recovery efficiencies for these surrogate compounds provided a measure of the sample collection efficiency and an indication of any analytical matrix effects.

Alternate Standards were spiked in the TLI laboratory after the field sampling program and prior to sample extraction. Recovery of these compounds indicated the extraction efficiencies.

Recovery Standards were added in the laboratory after extraction just prior to GC/MS analysis.

Table 6.15 summarizes the recovery efficiencies for the various standards and the respective quality control limits. In general, the recovery efficiencies for the XAD® blank, field blank, and samples were all within the method QC limits. Refer to TLI's case narrative for their discussion of any quality control anomalies.

6.3.4 SW-846 Method 0010

TLI analyzed the SW-846 Method 0010 samples following the procedures of SW-846 Method 8270A Rev. 1 (7/92). Field blanks and laboratory blanks were used to check for contamination. The blanks were processed in the same way the field samples were processed. The results of the field and laboratory blanks are presented in Table 6.16. Also shown are the average catch weights for the compounds presented. The significance of the blank values was discussed in Section 2.

A five point initial calibration was performed using internal standards and instrument response factors developed for the target analytes. Method 8720A procedures require the percent standard deviations of the initial calibrations to be within 50% for most analytes and 30% for some analytes. All internal standards were within the Method 8270A quality control criteria. The XAD®-2 resins were spiked with surrogate standards prior to the field sampling. The percent recoveries for the surrogate standards are presented in Table 6.17. Refer to TLI's case narrative for their explanation of the high terphenyl-d_{14} recoveries.

TABLE 6.4

SUMMARY OF EPA METHODS 23 AND 29 AND SW-846 METHOD 0010 FIELD SAMPLING QA/QC DATA

Date	Site	Run No.	Pre-Test Leak Rate acfm	Post-Test Leak Rate acfm	EPA Criteria	Percent Isokinetic	EPA Criteria
09/09/97	Baghouse Inlet	I-M29-1	0.002 @ 10" Hg	0.015 @ 6" Hg	0.02	104.0	90-110%
	Baghouse Outlet	O-M29-1	< 0.001 @ 11.5" Hg	< 0.001 @ 8.5" Hg	0.02	103.1	90-110%
		BO-23-1	0.002 @ 15" Hg	0.001 @ 8" Hg	0.02	98.9	90-110%
		BO-0010-1	0.008 @ 15" Hg	0.003 @ 14" Hg	0.02	99.4	90-110%
09/10/97	Baghouse Inlet	I-M29-2	0.003 @ 11" Hg	0.002 @ 17" Hg	0.02	102.7	90-110%
		I-M29-3	0.008 @ 13" Hg	0.002 @ 5" Hg	0.02	106.5	90-110%
	Baghouse Outlet	O-M29-2	0.007 @ 11" Hg	0.004 @ 8" Hg	0.02	102.2	90-110%
		O-M29-3	< 0.001 @ 11" Hg	0.002 @ 12" Hg	0.02	99.7	90-110%
		BO-23-2	0.001 @ 15" Hg	0.004 @ 15" Hg	0.02	99.7	90-110%
		BO-23-3	0.005 @ 15" Hg	0.007 @ 12" Hg	0.02	98.5	90-110%
		BO-0010-2	0.010 @ 15" Hg	0.008 @ 15" Hg	0.02	97.3	90-110%
		BO-0010-3	0.004 @ 15" Hg	0.003 @ 11" Hg	0.02	102.6	90-110%

TABLE 6.5

SUMMARY OF EPA METHOD 29 ANALYSIS QC DATA
LAB CONTROL SPIKES

Analyte	Spike Amt µg/L	LCS Recovery	ICP LCS Recovery	Recovery Limits
Ag	50	94%	86%	80-120%
As	50	99%	89%	80-120%
Ba	50	100%	93%	80-120%
Be	50	96%	91%	80-120%
Cd	50	101%	92%	80-120%
Co	50	99%	94%	80-120%
Cr	50	101%	94%	80-120%
Mn	50	100%	95%	80-120%
Ni	50	102%	91%	80-120%
P	1000	103%	90%	80-120%
Pb	50	97%	93%	80-120%
Sb	50	102%	94%	80-120%
Se	50	98%	89%	80-120%
Tl	50	100%	83%	80-120%
Zn	200	101%	96%	80-120%

TABLE 6.6

SUMMARY OF EPA METHOD 29 ANALYSIS QC DATA MATRIX SPIKES (POST-DIGESTION)

		Percent Recovery*		
Analyte	**Spike Amt μg**	**Run No. M29-1-FH**	**Run No. M29-2-FH**	**Recovery Limits**
Ag	50	91%	74%	75-125%
As	50	90%	99%	75-125%
Ba	50	99%	93%	75-125%
Be	50	91%	87%	75-125%
Cd	50	97%	91%	75-125%
Co	50	93%	89%	75-125%
Cr	50	101%	92%	75-125%
Mn	50	SL	SL	75-125%
Ni	50	98%	97%	75-125%
P	1000	0%	98%	75-125%
Pb	50	SL	SL	75-125%
Sb	50	90%	97%	75-125%
Se	50	90%	91%	75-125%
Tl	50	47%	93%	75-125%
Zn	200	SL	SL	75-125%

* SL = Spike Low, % Recovery is not considered valid when spike amount is less than 20% of recovered amount.

TABLE 6.7

SUMMARY OF EPA METHOD 29 ANALYSIS QC DATA
DUPLICATE ANALYSES

Analyte	Sample μg	Duplicate μg	RPD	RPD Limits
Run I-M29-2-FH				
Ag	5.05	5.05	0%	± 20%
As	2.96	3.36	< RDL	± 20%
Ba	27.2	27.4	0.7%	± 20%
Be	0.148	0.148	< RDL	± 20%
Cd	29.9	29.9	0%	± 20%
Co	0.510	0.499	< RDL	± 20%
Cr	15.4	15.5	0.6%	± 20%
Mn	1,260	1,250	0.8%	± 20%
Ni	5.14	5.20	1.2%	± 20%
P	42.0	42.5	1.2%	± 20%
Pb	1,490	1,490	0%	± 20%
Sb	10.6	10.7	0.9%	± 20%
Se	1.88	1.83	< RDL	± 20%
Tl	0.310	NA*	NA*	± 20%
Zn	8,480	8,510	0.4%	± 20%
Run I-M29-3-FH				
Ag	18.9	18.9	0%	± 20%
As	314	346	< RDL	± 20%
Ba	2,500	2,540	1.6%	± 20%
Be	9.11	9.05	< RDL	± 20%
Cd	3,010	3,070	2.0%	± 20%
Co	47.3	47.7	0.8%	± 20%
Cr	2,030	2,080	2.4%	± 20%
Mn	165,700	168,600	1.7%	± 20%
Ni	498	513	< RDL	± 20%
P	61,100	62,700	2.6%	± 20%
Pb	147,800	150,900	2.1%	± 20%
Sb	1,290	1,360	5.3%	± 20%
Se	116	116	0%	± 20%
Tl	131	139	5.9%	± 20%
Zn	774,200	789,600	2.0%	± 20%

TABLE 6.7 (Concluded)

SUMMARY OF EPA METHOD 29 ANALYSIS QC DATA DUPLICATE ANALYSES

Analyte	Sample μg	Duplicate μg	RPD	RPD Limits
Run I-M29-2-BH				
Ag	0.181	0.194	< RDL	± 20%
As	< 0.639	< 0.639	< RDL	± 20%
Ba	1.95	1.94	< RDL	± 20%
Be	< 0.128	< 0.128	< RDL	± 20%
Cd	0.142	0.157	< RDL	± 20%
Co	< 0.128	< 0.128	< RDL	± 20%
Cr	2.40	2.29	< RDL	± 20%
Mn	10.0	9.99	0.1%	± 20%
Ni	0.480	< 0.383	< RDL	± 20%
P	15.6	16.5	< RDL	± 20%
Pb	12.2	12.3	0.8%	± 20%
Sb	< 0.511	< 0.511	< RDL	± 20%
Se	0.820	0.656	< RDL	± 20%
Tl	< 0.256	NA*	NA*	± 20%
Zn	58.7	58.7	0%	± 20%

* Duplicate analysis not reported for elements analyzed by GFAA.

TABLE 6.8

SUMMARY OF EPA METHOD 29 ANALYSIS QC DATA
SERIAL DILUTION

Analyte	Sample μg	Serial Dilution μg	RPD *	RPD Limits
Run I-M29-1-FH				
Ag	1.06	1.12	< RDL	± 10%
As	0.744	< 2.50	< RDL	± 10%
Ba	5.15	5.27	< RDL	± 10%
Be	< 0.100	< 0.500	< RDL	± 10%
Cd	2.86	2.83	< RDL	± 10%
Co	< 0.100	< 0.500	< RDL	± 10%
Cr	4.14	6.32	< RDL	± 10%
Mn	158	164	3.7%	± 10%
Ni	5.04	6.44	< RDL	± 10%
P	10.6	15.8	< RDL	± 10%
Pb	191	201	5.1%	± 10%
Sb	2.37	4.10	< RDL	± 10%
Se	0.856	1.77	< RDL	± 10%
Tl	< 0.200	NA**	NA**	± 10%
Zn	1,140	1,200	5.1%	± 10%
Run No. I-M29-2-FH				
Ag	50.3	42.0	< RDL	± 20%
As	246	601	< RDL	± 20%
Ba	2,850	2,930	2.8%	± 20%
Be	15.2	17.3	< RDL	± 20%
Cd	3,760	3,950	4.9%	± 20%
Co	43.0	47.2	< RDL	± 20%
Cr	2,440	2,490	2.0%	± 20%
Mn	208,300	221,400	6.1%	± 20%
Ni	445	573	< RDL	± 20%
P	2,700	3,360	< RDL	± 20%
Pb	198,600	206,900	4.1%	± 20%
Sb	1,390	1,580	< RDL	± 20%
Se	127	125	< RDL	± 20%
Tl	168	178	< RDL	± 20%
Zn	1,110,600	1,215,900	9.1%	± 20%

TABLE 6.8 (Concluded)

SUMMARY OF EPA METHOD 29 ANALYSIS QC DATA
SERIAL DILUTION

Analyte	Sample μg	Serial Dilution μg	RPD*	RPD Limits
Run I-M29-1-BH				
Ag	0.143	< 0.661	< RDL	± 10%
As	< 0.661	< 3.31	< RDL	± 10%
Ba	0.455	< 1.32	< RDL	± 10%
Be	< 0.132	< 0.661	< RDL	± 10%
Cd	0.413	< 0.661	< RDL	± 10%
Co	< 0.132	< 0.661	< RDL	± 10%
Cr	2.48	3.12	< RDL	± 10%
Mn	1.31	1.36	< RDL	± 10%
Ni	0.778	< 1.98	< RDL	± 10%
P	14.6	19.9	< RDL	± 10%
Pb	3.27	3.12	< RDL	± 10%
Sb	0.741	< 2.65	< RDL	± 10%
Se	2.00	2.33	< RDL	± 10%
Tl	< 0.265	NA**	NA**	± 10%
Zn	20.0	21.3	< RDL	± 10%

* RPD = Relative percent deviation, which is not considered when the concentration in the analyte is less than 10 times the Reported Detection Limit (RDL) for ICP analysis and 5 times the RDL for GFAA analysis.
** Duplicate analysis not reported for elements analyzed by GFAA.

TABLE 6.9

SUMMARY OF EPA METHOD 29 ANALYSIS QC DATA
METHOD BLANK RESULTS

Analyte	Detection Limit µg/L	MB 1 Recovered Amount µg/L	MB 2 Recovered Amount µg/L
Ag	1	0.01	-0.04
As	5	0.21	-1.68
Ba	2	0.13	-0.04
Be	1	0.30	-0.81
Cd	1	-0.19	-0.24
Co	1	-0.08	-0.53
Cr	2	0.23	0.07
Mn	2	0.80	2.84
Ni	3	0.77	-1.13
P	30	3.21	-13.83
Pb	2	-0.07	1.67
Sb	4	0.50	-0.82
Se	3	0.10	0.23
Tl	2	1.20	-5.52
Zn	12	22.53	9.79

The Method Blank is considered a "Pass" when the recovered amount is less than the detection limit.

TABLE 6.10

SUMMARY OF EPA METHOD 29 ANALYSIS QC DATA
FIELD BLANKS RESULTS

Analyte	Inlet Front Half, μg	Inlet Back Half, μg	Outlet Front Half, μg	Outlet Back Half, μg
Ag	7.23	0.485	0.190	< 0.100
As	3.26	< 0.500	1.51	< 0.500
Ba	50.3	0.357	62.5	0.244
Be	< 0.100	< 0.100	< 0.100	< 0.100
Cd	172	4.07	< 0.100	0.185
Co	3.55	< 0.100	< 0.100	< 0.100
Cr	32.9	1.89	10.3	0.430
Mn	34.4	1.21	3.84	0.971
Ni	19.0	1.07	6.64	< 0.300
P	125	6.98	78.7	4.57
Pb	597	18.9	0.973	2.11
Sb	5.37	0.594	6.77	< 0.400
Se	4.47	1.01	5.77	1.22
Tl	< 0.500	0.490	< 0.200	< 0.200
Zn	166	16.8	11.3	12.0

TABLE 6.11

SUMMARY OF EPA METHOD 29 ANALYSIS QC DATA
MERCURY SUMMARY REPORT - LAB CONTROL SPIKES

Sample ID	Spike Amount μg/L	Recovery	Recovery Limits
LCS 1	5	100%	80-120%
LCS 1 Dup	5	102%	80-120%
LCS 2	5	102%	80-120%
LCS 2 Dup	5	106%	80-120%
LCS 3	5	93%	80-120%
LCS 3 Dup	5	88%	80-120%
LCS 5	5	111%	80-120%
LCS 5 Dup	5	101%	80-120%
LCS 6	5	91%	80-120%
LCS 6 Dup	5	98%	80-120%

TABLE 6.12

SUMMARY OF EPA METHOD 29 ANALYSIS QC DATA
MERCURY SUMMARY REPORT -MATRIX SPIKES (PRE-DIGESTION)

Sample ID	Spike Concentration µg/L	Recovery *	Recovery Limits
I-M29-FHAR,BKL-5% 10% BH MS	5	97%	75-125%
I-M29-FHAR,BKL-5% 10% BH MSD	5	92%	75-125%
I-M29-1-5% 10% BH MS	5	75%	75-125%
I-M29-1-5% 10% BH MSD	5	80%	75-125%
I-M29-1-KMnO4 MS	5	89%	75-125%
I-M29-1-KMnO4 MSD	5	87%	75-125%
I-M29-2-5% 10% BH MS	5	SL	75-125%
I-M29-2-5% 10% BH MSD	5	SL	75-125%
I-M29-3-5% 10% BH MS	5	28%	75-125%
I-M29-3-5% 10% BH MSD	5	16%	75-125%
O-M29-1-5% 10% BH MS	5	SL	75-125%
O-M29-1-5% 10% BH MSD	5	SL	75-125%
O-M29-2-KMnO4 MS	5	105%	75-125%
O-M29-2-KMnO4 MSD	5	112%	75-125%
O-M29-3-KMnO4 MS	5	86%	75-125%
O-M29-3-KMnO4 MSD	5	84%	75-125%
REAGENT BLANK BH MS	5	117%	75-125%
REAGENT BLANK BH MSD	5	102%	75-125%

* SL = Spike Low, % Recovery is not considered valid when spike amount is less than 20% of recovered amount.

TABLE 6.13

SUMMARY OF EPA METHOD 29 ANALYSIS QC DATA
MERCURY SUMMARY REPORT - METHOD BLANK

Sample ID	Detection Limit µg/L	Recovered Amount, µg/L
MB1	0.2	0.030
MB1 Dup	0.2	0.027
MB2	0.2	0.035
MB2 Dup	0.2	0.046
MB3	0.2	0.008
MB3 Dup	0.2	0.011
MB5	0.2	0.008
MB5 Dup	0.2	0.030
MB6	0.2	-0.003
MB6 Dup	0.2	0.000

TABLE 6.14

SUMMARY OF EPA METHOD 29 ANALYSIS QC DATA
MERCURY SUMMARY REPORT - FIELD AND REAGENT BLANKS

Sample ID	Inlet Field Blank μg	Outlet Field Blank μg	Reagent Blank μg
FH	< 0.400	< 0.400	< 0.400
FH - Dup	< 0.400	< 0.400	< 0.400
BH	< 1.20	< 0.600	< 1.20
BH- Dup	< 1.20	< 0.600	< 1.20
HNO_3	< 0.244	0.268	< 0.120
HNO_3 - Dup	< 0.244	0.290	< 0.120
$KMnO_4$	< 1.05	< 1.02	NA*
$KMnO_4$ - Dup	< 1.05	< 1.02	NA*
HCl	< 0.042	< 0.440	< 0.400
HCl - Dup	< 0.042	< 0.440	< 0.400

* According to the analytical case narrative this sample arrived broken and could not be analyzed.

TABLE 6.15

SUMMARY OF EPA METHOD 23 STANDARDS RECOVERY EFFICIENCIES

	Percent Recovery							QC Limits
	TLI M23 Blank	M23 Field Blank 1	M23 Field Blank 2	Trip Blank	BO-23-1	BO-23-2	BO-23-3	
FULL SCREEN ANALYSIS								
Internal Standards	48.2	51.0	53.6	49.6	52.4	60.1	64.4	40-130%
2,3,7,8-TCDF	46.3	51.0	56.0	50.4	47.3	48.4	47.0	40-130%
2,3,7,8-TCDD	40.6	40.5	44.1	39.8	44.9	48.5	43.5	40-130%
1,2,3,7,8-PeCDF	43.9	45.1	47.4	43.3	49.3	47.3	43.3	40-130%
1,2,3,7,8-PeCDD	62.2	71.2	72.2	62.6	62.3	58.7	57.3	40-130%
1,2,3,6,7,8-HxCDF	63.5	68.0	86.0	72.7	71.4	64.8	73.9	40-130%
1,2,3,6,7,8-HxCDD	51.7	66.7	58.1	57.4	43.0	58.8	66.2	25-130%
1,2,3,4,6,7,8-HpCDF	59.8	81.0	68.8	67.0	51.8	72.8	79.4	25-130%
1,2,3,4,6,7,8-HpCDD	55.1	82.4	67.4	67.5	48.2	70.5	77.0	25-130%
1,2,3,4,6,7,8,9-OCDD								
Surrogate Standards								
2,3,7,8-TCDD	94.1	101	94.3	94.6	95.5	94.9	99.2	70-140%
2,3,4,7,8-PeCDF	105	106	106	104	102	100	111	70-140%
1,2,3,4,7,8-HxCDF	96.1	96.4	94.1	98.0	104	103	102	70-140%
1,2,3,4,7,8-HxCDD	94.8	111	81.7	83.8	84.6	90.7	88.7	70-140%
1,2,3,4,7,8,9-HpCDF	87.0	108	101	87.8	96.7	116	113	70-140%
Alternate Standards								
1,2,3,7,8,9-HxCDF	53.6	70.2	68.2	61.8	62.2	69.5	70.8	40-130%
2,3,4,6,7,8-HxCDF	61.4	69.5	73.1	63.3	66.3	63.8	66.5	40-130%
CONFIRMATION ANALYSIS								
Internal Standards								
2,3,7,8-TCDF	*	*	*	48.9	48.9	48.4	46.3	40-130%

* Confirmation analysis was not necessary on these samples since no TCDF's were detected in the full screen analysis.

TABLE 6.16

SW-846 METHOD 0010 FIELD AND LABORATORY BLANKS RESULTS

Compound	Amount, micrograms*			
	Average Catch Weight**	Field Blank	Method Blank	Laboratory Blank
Acetophenone	22.5	{5.09}	{4.77}	{5.03}
Di-n-butylphthalate	{3.75}	{3.06}	{1.21}	{3.61}
Dimethylphthalate	{2.62}	{3.19}	ND	ND
bis(2-Ethylhexyl)phthalate	{13.8}	{8.95}	{1.11}	{0.95}
2-Methylnaphthalene	{4.17}	{0.36}	ND	ND
Naphthalene	{15.7}	{1.84}	{1.64}	{1.61}
Phenol	{9.19}	{1.44}	{0.49}	{0.51}

* Values in brackets { } are estimated values that were above the detection limit, but below the quantitation limit.
ND = Compound was not detected.

** Average Catch Weight = Average sample amount from runs BO-0010-1, BO-0010-2, and BO-0010-3.

TABLE 6.17

SW-846 METHOD 0010 SURROGATE RECOVERY RESULTS

Surrogate	Percent Recovery						
	BO-0010-1	BO-0010-2	BO-0010-3	Field Blank	Method 0010 Blank	SBLK 091497*	Method QC Limits
Phenol-d_5	80	66	58	65	68	70	20-120
Nitrobenzene-d_5	76	92	77	54	61	61	20-120
1,3,5-Trichlorobenzene-d_3	74	90	74	52	59	46	20-120
1,4-Dibromobenzene-d_4	82	89	81	58	64	72	20-120
2-Fluorobiphenyl	83	92	88	69	75	65	20-120
2,4,6-Tribromophenol	110	102	81	95	50	93	20-120
Anthracene-d_{10}	101	88	86	104	96	94	20-120
Pyrene-d_{10}	117	120	114	118	109	103	20-120
Terphenyl-d_{14}	149	151	146	147	137	130	20-120

* Laboratory Sample Blank

APPENDIX A

RAW FIELD DATA

Appendix A.1

Raw Field Data

Baghouse Inlet

TRAVERSE POINT LOCATION FOR CIRCULAR DUCTS

Plant: Wapaco @ Tell City Indiana

Date: 4-8-1997

Sampling Location: Inlet

Inside of Far Wall to Outside of Nipple: 58 3/8"

Inside of Near Wall to Outside of Nipple (Nipple Length): 3"

Stack I.D.: 55 3/8"

Distance Downstream from Flow Disturbance (Distance B):

50' ~~inches~~ feet / Stack I.D. = 10.8 dd

Distance Upstream from Flow Disturbance (Distance A):

23'9½" ~~inches~~ feet / Stack I.D. = 2.1 dd

Calculated By: ADD

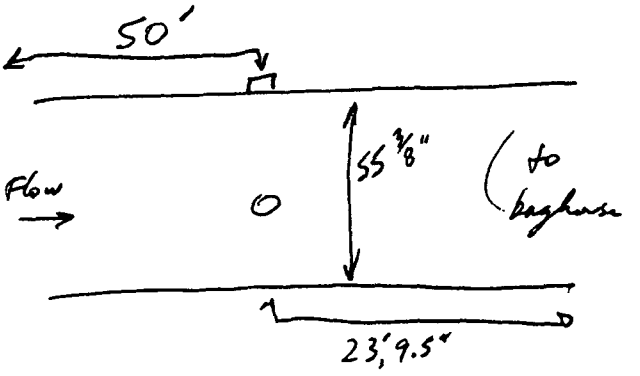

Schematic of Sampling Location

Traverse Point Number	Fraction of Length	Length (inches)	Product of Columns 2 & 3 (To nearest 1/8")	Nipple Length (inches)	Traverse Point Location (Sum of Col. 4 & 5)
1	0.044	55.375	2.437	3"	5½"
2	0.146	↓	8.085	↓	11⅛"
3	0.246	↓	16.391	↓	19 3/8"
4	0.704	↓	38.984	↓	42"
5	0.854	↓	47.290	↓	50¼"
6	0.956	↓	52.939	↓	55 7/8"

Inclosure 228

GAS VELOCITY AND VOLUMETRIC FLOW RATE

Plant: Napa Foundry Inc. Date: 9-8-'97
Sampling Location: Inlet Clock Time: 1:00
Run #: Preliminary Operators: ADD / MM
Barometric Pressure, in. Hg: 29.55 Static Pressure, in. H_2O: -11.25
Moisture, %: 5% Molecular wt., Dry: 30.00 Pitot Tube, Cp: 0.84
Stack Dimension, in. Diameter or Side 1: 55 3/8" Side 2: ——
Wet Bulb, °F: —— Dry Bulb, °F: ——

Traverse Point Number	Velocity Head in. H_2O	Stack Temp. °F / Cyclonic ∅
A 1/6	0.74	316°/ 18°
2/5	0.81	309/ 17°
3/4	0.90	308/ 14°
4/3	0.89	301/ 13°
5/2	0.82	298/ 8°
6/1	0.72	285/ 13°
		AVG = 13.8°
B 6	0.70	300
5	0.84	305
4	0.82	307
3	0.90	308
2	0.92	303
1	0.67	300
	$\overline{\sqrt{\Delta P}}$ = ~~0.891~~ 0.899	$\overline{T_s}$ = 302.8

$Md = (0.44 \times \%CO_2) + (0.32 \times \%O_2) + (0.28 \times \%N_2)$

$Md = (0.44 \times \quad) + (0.32 \times \quad) + (0.28 \times \quad)$

$Md =$

$Ms = Md \times (1 - \frac{\%H_2O}{100}) + 18(\frac{\%H_2O}{100})$

$Ms = (\quad) \times (1 - \frac{\quad}{100}) + 18(\frac{\quad}{100})$

$Ms =$

$\overline{T_s} =$ °F = °R (°F + 460)

$Ps = Pb + \frac{S.P.}{13.6} = (\quad) + \frac{\quad}{13.6}$

$Ps =$ in. Hg

$\overline{\sqrt{\Delta P}} =$

$Vs = 85.49 \times Cp \times \overline{\sqrt{\Delta P}} \times \sqrt{\frac{T_s (°R)}{Ps \times Ms}}$

$Vs = 85.49 \times (\quad) \times (\quad) \times \sqrt{\quad}$

$Vs =$ ft/s

$As =$ ft^2

$Qs = Vs \times As \times 60$ s/m

$Qs = \quad \times \quad \times 60$

$Qs =$ acfm

$Qs_{std} = Qs \times 17.647 \times \frac{Ps}{Ts} \times (1 - \frac{\%H_2O}{100})$

$Qs_{std} = \quad \times 17.647 \times \frac{\quad}{\quad} \times (1 - \frac{\quad}{100})$

$Qs_{std} =$ dscfm

K-98

Pg 1 of 2

FIELD DATA SHEET

Plant: Waupaca Foundry @ Ted City
Sampling Location: Inlet
Run Number: 1 Date: 9-9-97
I-M29-1 (EMC) 1/21/98
Pretest Leak Rate: 0.002 cfm @ 10 in. Hg.
Pretest Leak Check: Pitot: ✓ Orsat: ✓

Sample Type: Metals Operator: ADD/MM
Pbar: 29.50 Ps: -11.25
CO2: 10 O2: 10
Probe Length/Type: 6' Glass Pitot #: 5C
Stack Diameter: 55 3/8" As: ——

Nozzle ID: IMFC 1 Thermocouple #: 5C
Assumed Bws: 6 Filter #: 1014
Meter Box #: M5-4 Y: 1.021 ΔH@: 1.818
Post-Test Leak Rate: 0.015 cfm @ 6 in. Hg.
Post-Test Leak Check: Pitot: ✓ Orsat: ✓

Traverse Point Number	Sampling Time (min)	Clock Time (24-hour clock)	Gas Meter Reading (Vm) ft³	Velocity Head (Δp) in H2O	Orifice Pressure Differential (ΔH) in H2O Desired	Actual	Stack Temp. (Ts)	Temperature °F Probe	Filter	Impinger Temp. °F	Dry Gas Meter Temp. Inlet (Tm in °F)	Outlet (Tm out °F)	Pump Vacuum (in. Hg)
B1	1025	0	933.582										
		5	937.04	0.34	0.33	0.33	198	226	250	60	88 AD	83 AD	1.5
		10	938.77	0.50	0.49	0.49	202	224	249	55	90	83	1.5
		15	940.68	0.48	0.47	0.47	200	224	256	55	86	79	1.5
		20	942.60	0.67	0.66	0.66	294	225	251	56	86	80	2.0
		25	944.78	1.4	1.37	1.4	300	228	258	53	87	80	3.0
		30	947.93	0.36	0.35	0.35	285	231	254	57	88	81	1.5
2		35	950.04	0.32	0.32	0.32	282	228	252	61	90	85	1.5
3		40	951.64	0.51	0.50	0.50	294	227	252	60	89	84	2.0
		45	953.63	0.41	0.40	0.40	290	228	256	60	89	82	2.0
		50	955.44	0.45	0.44	0.44	290	229	256	62	89	83	1.5
		55	957.31	0.38	0.37	0.37	288	228	257	61	91	82	1.5
		60	959.18	0.34	0.33	0.33	287	228	254	61	89	84	1.5
		65	960.70	0.35	0.34	0.34	288	229	258	62	89	83	1.5
		70	962.06	0.37	0.36	0.36	288	231	252	62	89	83	1.5
		75	964.12	0.44	0.43	0.43	288	233	258	63	93	83	2.0
5		80	965.97	0.32	0.31	0.31	286	235	257	63	90	84	2.0
		85	967.64	0.30	0.29	0.29	283	234	255	65	89	84	2.0
		90	969.20	0.37	0.36	0.36	283	230	254	64	89	84	2.0
		95	970.92	0.32	0.31	0.31	283	230	255	57	89	84	2.0
6		100	972.43	0.30	0.29	0.29	281	227	254	54	88	83	2.0
		105	974.11	0.32	0.31	0.31	280	226	251	53	89	84	2.0
		110	975.72	0.28	0.27	0.27	280	225	256	53	88	84	1.5
		115	977.23	0.31	0.30	0.30	281	225	257	54	88	84	2.0
	1225	120 121.2	979.221	leak ✓ 0.002 @ 6"									
B6		120	979.438	leak ✓ 0.003 @ 9"		.415							
				0.640									

ΔVm = ____ $\sqrt{\Delta p}$ = ____ ΔH = ____ Ts = 275.3 (274.8) Tm = 82.870

FIELD DATA SHEET

Pg 2 of 2

Plant: Waupaca @ Tell City
Sampling Location: Inlet
Run Number: 1 Date: 9-9-97
I-M29-1 cmc 1/21/98
Pretest Leak Rate: ___ cfm @ ___ in. Hg.
Pretest Leak Check: Pitot: ___ Orsat: ___

Sample Type: Metal Operator: ADD/MM
Pbar: 29.50 Ps: -1.25
CO2: 10 O2: 10
Probe Length/Type: 6'/Glass Pitot #: 5C
Stack Diameter: 55 3/8" As: ___

Nozzle ID: 0.194 (IMPC1) Thermocouple #: 5C
Assumed Bws: 6% Filter #: 1014
Meter Box #: M5-4 Y: 1.021 ΔH@: 1.818
Post-Test Leak Rate: ___ cfm @ ___ in. Hg.
Post-Test Leak Check: Pitot: ___ Orsat: ___

Traverse Point Number	Sampling Time (min)	Clock Time (24-hour clock)	Gas Meter Reading (Vm) ft³	Velocity Head (Δp) in H2O	Orifice Pressure Differential (ΔH) in H2O Desired	Actual	Stack Temp. (Ts)	Temperature °F Probe	Filter	Impinger Temp. °F	Dry Gas Meter Temp. Inlet (Tm in °F)	Outlet (Tm out °F)	Pump Vacuum (in. Hg)
1A6	[illegible]	120	979.438	0.23	0.22	0.22	234	223	253	54	82	81	2.0
	13101	125	980.87	0.22	0.21	0.21	235	225	251	55	84	81	2.0
		130	982.21	0.21	0.20	0.20	238	225	253	56	84	81	2.0
		135	983.56	0.24	0.23	0.23	237	224	254	56	86	84	2.0
2		140	984.95	0.33	0.32	0.32	239	228	252	55	87	81	2.0
		145	986.57	0.31	0.30	0.30	275	234	254	54	87	82	2.0
		150	988.16	0.28	0.27	0.27	274	236	253	54	88	82	2.0
		155	989.68	0.30	0.29	0.29	275	237	254	55	90	84	2.0
3		160	991.27	0.31	0.30	0.30	278	237	255	55	89	83	2.0
		165	992.88	0.31	0.30	0.30	281	237	253	61	90	84	2.0
		170	994.50	0.32	0.31	0.31	281	236	253	62	92	84	2.0
		175	996.13	0.31	0.30	0.30	280	238	255	57	92	84	2.0
4		180	997.77	0.35	0.34	0.34	285	240	255	56	91	85	2.0
		185	999.44	0.36	0.35	0.35	289	240	252	56	91	85	2.0
		190	1001.18	0.41	0.40	0.40	289	239	254	57	92	85	2.5
		195	1003.05	0.36	0.35	0.35	289	239	253	57	93	85	2.0
5		200	1004.79	0.34	0.33	0.33	289	238	256	59	93	86	2.0
		205	1006.44	0.30	0.29	0.29	289	238	253	59	93	87	2.0
		210	1008.05	0.34	0.33	0.33	288	239	257	59	93	86	2.0
		215	1009.75	0.36	0.35	0.35	288	239	255	59	94	87	2.5
6		220	1011.52	0.29	0.28	0.28	288	240	256	59	94	88	2.0
		225	1013.12	0.33	0.32	0.32	291	241	256	59	95	87	2.0
		230	1014.79	0.33	0.32	0.32	286	240	255	59	94	87	2.0
		235	1016.49	0.32	0.31	0.31	286	240	254	59	94	87	2.0
		240.5	1018.297	END OF RUN									
				.3528		0.301							
													86.6

ΔVm= 84.498 √Δp= 0.598 ΔH= 0.360 Ts= 263.94 252.685 Tm= 83.643

.3588 273 274 91.412 86.6 = 50 10 8.8

SAMPLE RECOVERY DATA

PLANT Wanpaun Foundry Run No. I-M29-1

DATE 9/9/97 Sample Box No. — Job No. 5414.003

SAMPLE LOCATION Inlet Filter No. 1014

TRAIN PREPARER M Hamilton

SAMPLE RECOVERY PERSON M Hamilton

COMMENTS Front Half Acid Rinse → I-M29-1-FHAR

FRONT HALF

Acetone Container No. I-M29-1-FHAR Liquid Level Marked ✓ Sealed ✓

Filter Container No. I-M29-1-Filter Sealed ✓

Description of Filter Mid Dark Tan to Brown Solid

Samples Stored and Locked ✓

BACK HALF/MOISTURE

Container No. I-M29-1-5%10%; I-M29-1-BHAR; I-M29-1-KMnO4; I-M29-1-HCl

Liquid Level Marked ✓ Sealed ✓

IMP. NO.	CONTENTS	INITIAL VOL (ml)	WEIGHT (grams)		
			INITIAL	FINAL	NET
1	5% HNO3 / 10% H2O2 / 10% H2SO4	100	730.3	769.6	39.3
2	5% HNO3 / 10% H2O2 / 10% H2SO4	100	716.7	712.6	-4.1
3	EMPTY	0	566.2	561.5	-4.7
4	4% KMnO4 / 10% H2SO4	100	731.9	732.4	0.5
5	4% KMnO4 / 10% H2SO4	100	729.9	730.3	0.4
6	Silica Gel	—	752.5	765.5	13.0
TOTAL			4227.5	4271.9	44.4

160ml used

BS

K-1.017

FIELD DATA SHEET

Plant: Nauvoo @ Tell City
Sampling Location: Inlet
Run Number: ~~2~~ 1 (I-M29-2 CMC 1/21/98)
Date: 9-10-97
Pretest Leak Rate: 0.003 cfm @ 11" in. Hg.
Pretest Leak Check: Pitot: ✓ (+7.9 / -4.9) Orsat: ✓

Sample Type: Metals
Operator: ADD/MM
Pbar: 29.58
Ps: -11.25
CO2: 10
O2: 10
Probe Length/Type: 6'/Glass
Pitot #: 5C
Stack Diameter: 55 3/8"
As: ——

Nozzle ID: 0.194
Thermocouple #: 5C
Assumed Bws: 3
Filter #: 1019
Meter Box #: M5-4
Y: 1.021
ΔH@: 1.818
Post-Test Leak Rate: 0.002 cfm @ 17" in. Hg.
Post-Test Leak Check: Pitot: ✓ Orsat: ✓

Traverse Point Number	Sampling Time (min)	Clock Time (24-hour clock)	Gas Meter Reading (Vm) ft³	Velocity Head (Δp) in H2O	Orifice Pressure Differential (ΔH) in H2O Desired	Orifice Pressure Differential (ΔH) in H2O Actual	Stack Temp. (Ts)	Temperature °F Probe	Temperature °F Filter	Impinger Temp. °F	Dry Gas Meter Temp. Inlet (Tm in °F)	Dry Gas Meter Temp. Outlet (Tm out °F)	Pump Vacuum (in. Hg)
A 6	0	7:58	018.700										
	5		020.83	0.42	0.43	0.43	293	224	254	48	77	74	7.5
	10		022.61	0.42	0.43	0.43	288	231	225	49	79	75	5
	15		24.72	0.42	0.43	0.43	289	232	250	49	81	74	5
5	20	8:18	26.53	0.43	0.44	0.44	290	234	260	50	81	75	6
	25		28.37	0.47	0.48	0.48	287	237	260	50	83	76	6
	30		30.29	0.56	0.57	0.57	295	239	255	51	85	77	7
	35		32.31	0.54	0.55	0.55	297	240	258	53	85	~~83~~ 77	7
4	40	8:38	34.33	0.55	0.56	0.56	297	240	257	52	85	77	8
	45		36.26	0.60	0.61	0.61	296	237	252	52	86	79	10
	50		38.45	0.60	0.61	0.61	299	238	255	53	86	78	10.5
	55		40.63	0.75	0.76	0.76	302	238	260	54	87	79	14
3	60	8:58	43.25	0.65	0.66	0.66	299	234	259	53	87	80	6.5
	65		45.50	0.71	0.72	0.72	300	234	248	55	88	80	7
	70		47.87	0.71	0.72	0.72	300	236	247	55	89	81	7.5
	75		50.27	0.78	0.79	0.79	301	236	246	55	92	82	8
2	80	9:18	52.78	0.80	0.81	0.81	305	234	247	54	91	82	9
	85		55.34	0.77	0.78	0.78	300	233	245	54	91	82	8.5
	90		57.87	0.82	0.83	0.83	302	233	245	54	90	82	8.5
	95		60.43	0.84	0.85	0.85	304	234	247	55	90	82	10
1	100	9:38	63.08	0.72	0.73	0.73	305	237	250	55	91	82	8.5
	105		65.56	0.72	0.73	0.73	291	237	248	57	91	83	8
	110		67.99	0.69	0.70	0.70	292	236	248	57	91	83	7.5
	115		70.37	0.72	0.73	0.73	290	237	252	58	92	84	8
	120.1	9:58	72.871										
		Post leak ✓		0.006 @ 15"									
		pre leak ✓		0.002 @ 15"									

118.714 ΔVm= 118.332 ✓ √Δp= 0.869 ✓ ΔH= 0.774 ✓ Ts= 300.6 ✓ 71.240 Tm= 87.4 ✓

117 47 ISO 102 ✓ DS

Plant Name: Waupaca @ Tell City **Test Date:** 9-10-97

Run Number: ~~2 - Inlet~~ I-M29-2 CMC 1/21/98 **Operator:** ADD/UM

Traverse Point Number	Sampling Time, (min.)	Clock Time (24-hour clock)	Gas Meter Reading (V_m) ft³	Velocity Head (ΔP_s) in. H_2O	Orifice Pres. Differential (ΔH) in. H_2O Desired	Orifice Pres. Differential (ΔH) in. H_2O Actual	Stack Temp. °F (T_s)	Probe Temp. / Filter Temp.° F	Impinger Temp. °F	Dry Gas Meter Temp. Inlet ($T_{m_{in}}$) °F	Dry Gas Meter Temp. Outlet ($T_{m_{out}}$) °F	Pump Vacuum In. Hg
B 6	120.1	10:38	73.253	0.95	0.96	0.96	289	224 / 230	58	88	83	6
	125		75.87	0.97	0.98	0.98	294	224 / 240	57	89	83	6.5
	130		78.64	0.72	0.73	0.73	305	234 / 260	57	92	85	6
	135		81.10	0.86	0.87	0.87	313	245 / 255	56	94	85	6.5
5	140	10:53	83.72	0.91	0.92	0.92	310	248 / 254	57	94	87	7
	145		86.44	0.79	0.80	0.80	302	253 / 257	58	95	88	7
	150		89.99	0.76	0.77	0.77	304	253 / 256	59	95	88	7
	155		91.49	0.80	0.81	0.81	305	253 / 252	60	95	88	7.5
4	160	11:13	94.04	0.89	0.90	0.90	311	252 / 254	60	96	88	8
	165		96.70	0.89	0.90	0.90	313	251 / 254	60	99	88	8.5
	170		99.39	0.86	0.87	0.87	313	251 / 253	60	96	89	8.6
	175		102.05	0.87	0.88	0.88	309	252 / 255	60	95	89	9.0
3	180	11:33	104.72	0.90	0.91	0.91	310	255 / 253	61	95	89	9.5
	185		107.51	1.0	1.0	1.0	312	257 / 255	61	96	89	10.5
	190		110.22	0.94	0.95	0.95	313	254 / 254	54	95	90	10.5
	195		112.99	1.1	1.1	1.1	316	252 / 253	54	95	90	11.5
2	200	11:53	115.87	0.90	0.91	0.91	315	248 / 256	53	94	91	11
	205		118.62	0.94	0.95	0.95	300	244 / 254	54	94	90	11.5
	210		121.37	1.0	1.0	1.0	302	241 / 253	54	94	90	12
	215		124.22	0.92	0.93	0.93	305	241 / 255	54	94	90	12.5
1	220	12:13	127.08	0.93	0.94	0.94	306	244 / 255	54	96	90	12.5
	225		129.71	0.87	0.88	0.88	291	246 / 254	54	97	91	13
	230		132.39	0.78	0.79	0.79	283	247 / 253	55	97	91	12.5
	235		134.94	0.71	0.72	0.72	287	245 / 256	56	98	91	12
	240	12:38	137.414	END OF Run								

SAMPLE RECOVERY DATA

PLANT Waupaca Foundry Run No. I-M29-2

DATE 9/10/87 Sample Box No. — Job No. S 414.003

SAMPLE LOCATION Inlet Filter No. 1019

TRAIN PREPARER M Hani Han

SAMPLE RECOVERY PERSON M Hani Han

COMMENTS Front Half Acid Rinse → ~~FHAR~~ I-M29-2-FHAR

FRONT HALF

Acetone Container No. I-M29-2-FHAR Liquid Level Marked ✓ Sealed ✓

Filter Container No. I-M29-2-Filter Sealed ✓

Description of Filter Brown Particulate

Samples Stored and Locked ✓

BACK HALF/MOISTURE

Container No. I-M29-2-5%10%; I-M29-2-BHAR; I-M29-2-KMnO4; I-M29-2-HCl

Liquid Level Marked ✓ Sealed ✓

IMP. NO.	CONTENTS	INITIAL VOL (ml)	WEIGHT (grams)		
			INITIAL	FINAL	NET
1	5% HNO_3/10% H_2O_2	100	730.7	772.1	41.4
2	5% HNO_3/10% H_2O_2	100	588.8	595.1	6.3
3	Empty	0	545.3	546.4	1.1
4	4% $KMnO_4$/10% H_2SO_4	100	621.5 + 102.9 = 728.4	691.3	-37.1
5	4% $KMnO_4$/10% H_2SO_4	100	627.6 + 102.9 = 730.5	766.3	35.8
6	Silica Gel	—	776.9	801.6	24.7
TOTAL			4101.6	4172.8	71.2

A1

I.' 2 0'' 0.19' - .192 PS'.F2

FIELD DATA SHEET

~~K-0.997~~ K-1.017

Plant: Waupaca @ Tell City
Sampling Location: Inlet
Run Number: 3 Date: 9-10-97
I-M29-3 (cmc 11/21/98)
Pretest Leak Rate: 0.008 cfm @ 13 in. Hg.
Pretest Leak Check: Pitot: ✓ Orsat: ✓

Sample Type: Metals Operator: ADD/MM
Pbar: 29.58 Ps: -11.25
CO2: 10 O2: 10
Probe Length/Type: 6'/Glass Pitot #: 5C
Stack Diameter: 55 3/8" As: —

Nozzle ID: 0.192 Thermocouple #: ~~1011~~ 5C
Assumed Bws: 3 Filter #: 1011
Meter Box #: M5-4 Y: 1.021 ΔH@: 1.818
Post-Test Leak Rate: 0.002 cfm @ 5 in. Hg.
Post-Test Leak Check: Pitot: ✓ Orsat: ✓

Traverse Point Number	Sampling Time (min)	Clock Time (24-hour clock)	Gas Meter Reading (Vm) ft³	Velocity Head (Δp) in H2O	Orifice Pressure Differential (ΔH) in H2O Desired	Orifice Pressure Differential (ΔH) in H2O Actual	Stack Temp. (Ts)	Temperature °F Probe	Temperature °F Filter	Impinger Temp. °F	Dry Gas Meter Temp. Inlet (Tm in °F)	Dry Gas Meter Temp. Outlet (Tm out °F)	Pump Vacuum (in. Hg)	
A16	0	15:15	139.603											
	5		142.28	0.65	0.65	0.65	278	229	255	64	96	90	2	
	10		144.58	0.98	0.98	0.98	278	228	255	57	98	89	3	
	15		147.61	0.47	0.47	0.47	275	233	256	42	100	89	1.5	
28	20	15:38	149.73	0.62	0.62	0.62	292	232	254	44	97	90	1.5	
	25		152.03	0.60	0.60	0.60	290	232	255	44	98	92	1.5	new K
	30		154.27	0.63	0.63	0.63	290	238	254	43	99	90	2.0	
	35		156.62	0.62	0.63	0.63	290	242	255	44	98	90	2.0	
39	40	15:58	158.94	0.55	0.56	0.56	288	244	256	43	98	89	2.0	plant down
Plant Down	45	16:16	161.22	0.65	0.66	0.66	292	228	254	48	93	88	2.0	
	50		163.56	0.54	0.55	0.55	295	233	256	46	97	88	2.0	
	55		165.73	0.60	0.61	0.61	296	237	257	49	95	88	2.0	
48	60	16:32	168.00	0.72	0.73	0.73	296	238	252	49	95	88	2.0	
	65		170.42	0.78	0.79	0.79	306	237	254	49	96	88	2.0	
	70		172.99	0.76	0.77	0.77	305	232	253	49	97	88	2.0	
	75		175.53	0.83	0.84	0.84	305	228	255	50	96	88	2.0	
58	80	16:52	178.20	0.73	0.74	0.74	308	225	256	50	96	89	2.0	
	85		180.67	0.81	0.82	0.82	304	227	255	51	95	88	2.0	
	90		183.29	0.81	0.82	0.82	311	227	255	51	96	88	2.0	
	95		185.91	0.91	0.92	0.92	314	226	254	51	95	89	2.5	
68	100	17:12	188.68	0.73	0.74	0.74	311	227	254	51	96	89	2.0	
	105		191.20	0.74	0.75	0.75	307	227	255	52	95	88	2.5	
	110		193.73	0.63	0.64	0.64	305	228	255	52	97	88	2.0	
	175		196.05	0.69	0.70	0.70	304	228	256	53	97	87	2.5	
	120	Post Leak ✓	198.586				~~304~~	~~229~~	~~256~~	~~53~~	~~95~~	~~88~~		
		Post Leak ✓	0.010	@ 5"										
		pre leak ✓	0.003	@ 5"										

ΔVm = 122.005 √Δp = ~~0.8578~~ 0.8766 ΔH = ~~0.766~~ 0.782 Ts = ~~296~~ 302 / 303.14 Tm = ~~88~~ 90 / 5

122.9 - .895

Plant Name: Waupaca @ Tell City **Test Date:** 9-10-97

Run Number: ~~3 Inlet~~ I-M29-3 (EMC) 11/21/18 **Operator:** ADD/MM

Traverse Point Number	Sampling Time, (min.)	Clock Time (24-hour clock)	Gas Meter Reading (V_m) ft³	Velocity Head (ΔP_s) in. H_2O	Orifice Pres. Differential (ΔH) in. H_2O Desired	Orifice Pres. Differential (ΔH) in. H_2O Actual	Stack Temp. °F (T_s)	Probe Temp. / Filter Temp.° F	Impinger Temp. °F	Dry Gas Meter Temp. Inlet ($T_{m_{in}}$) °F	Dry Gas Meter Temp. Outlet ($T_{m_{out}}$) °F	Pump Vacuum In. Hg
B 6	120	18:22	199.481	0.74	0.75	0.75	298	224 / 232	64	83	82	3.5
	125		201.87	0.73	0.74	0.74	307	225 / 244	54	86	82	3.5
	130		204.21	0.77	0.78	0.78	307	228 / 255	46	89	82	3.5
	135		206.78	0.77	0.78	0.78	308	233 / 258	44	90	82	3.5
5	140	18:41	209.29	0.87	0.88	0.88	308	239 / 260	44	90	83	3.5
	145		211.96	0.81	0.82	0.82	309	244 / 258	44	91	83	3.5
	150		214.54	0.84	0.85	0.85	306	246 / 254	44	91	83	3.5
	155		217.18	0.85	0.86	0.86	305	248 / 255	44	91	84	3.5
4	160	19:01	219.84	0.80	0.81	0.81	305	248 / 256	45	92	83	3.5
	165		222.43	0.85	0.86	0.86	308	247 / 255	45	91	83	3.5
	170		225.07	0.86	0.87	0.87	308	244 / 253	45	91	83	3.5
	175		227.74	0.91	0.92	0.92	310	242 / 255	46	91	83	3.5
3	180	19:21	230.48	1.1	1.1	1.1	312	241 / 254	46	91	83	4
	185		233.42	0.82	0.83	0.83	312	241 / 254	46	91	83	3.5
	190		236.04	0.98	0.99	0.99	311	239 / 255	47	91	83	4
	195		238.67	1.1	1.1	1.1	317	237 / 255	47	91	83	4
2	200	19:41	241.81	0.90	0.91	0.91	316	237 / 255	47	91	83	4
	205.7		244.97	0.80	0.81	0.81	307	235 / 255	47	90	83	4
	210		247.18	0.95	0.96	0.96	306	233 / 255	48	90	84	4
	215		249.88	0.87	0.88	0.88	308	231 / 255	48	90	83	4
1	220	20:01	252.66	0.71	0.72	0.72	305	230 / 254	48	90	82	4
	225.5		255.32	0.69	0.69	0.69	293	229 / 253	49	89	82	3.5
	230		257.45	0.85	0.86	0.86	293	227 / 253	49	89	82	4
	235		260.01	0.74	0.75	0.75	295	228 / 256	49	89	82	4
	240	20:21	262.503	— END OF RUN								

SAMPLE RECOVERY DATA

PLANT Waupaca Foundry Run No. I-M29-3

DATE 9/10/97 Sample Box No. — Job No. S414.003

SAMPLE LOCATION Inlet Filter No. 1011

TRAIN PREPARER M Hamilton

SAMPLE RECOVERY PERSON M Hamilton

COMMENTS Front Half Acid Rinse → I-M29-3-FHAR

FRONT HALF

Acetone Container No. I-M29-3-FHAR Liquid Level Marked ✓ Sealed ✓

Filter Container No. I-M29-3-Filter Sealed ✓

Description of Filter Brown Particulate

Samples Stored and Locked ✓

BACK HALF/MOISTURE

Container No. I-M29-3-5%10% ; I-M29-3-BHAR ; I-M29-3-KMnO4 ; I-M29-3-HCl

Liquid Level Marked ✓ Sealed ✓

IMP. NO.	CONTENTS	INITIAL VOL (ml)	WEIGHT (grams)		
			INITIAL	FINAL	NET
1	5% HNO_3/10% H_2O_2	100	729.5	766.6	37.1
2	5% HNO_3/10% H_2O_2	100	709.6	713.1	3.5
3	Empty	0	566.1	566.6	0.5
4	4% $KMnO_4$/10% H_2SO_4	100	731.5	732.0	0.5
5	4% $KMnO_4$/10% H_2SO_4	100	731.9	732.8	0.9
6	Sil Gel	—	765.0	783.2	18.2
TOTAL			4233.6	4294.3	60.7

BE

FIELD DATA SHEET

Plant: Waupaca Foundry @ Tell City [redacted] (ADD)
Sampling Location: Inlet
Run Number: Field Blank Date: 9-8-97
Pretest Leak Rate: 0.004 cfm @ 15 in. Hg.
Pretest Leak Check: Pitot: — Orsat: —
0.004 @ 15"

Sample Type: Metals Operator: ADD/MM
Pbar: 29.55 Ps: -11.25
CO2: 10 O2: 10
Probe Length/Type: 6' Glass Pitot #: 5C
Stack Diameter: 55 3/8" As: NA

Nozzle ID: IMFC1 Thermocouple #: ____
Assumed Bws: 5% Filter #: [redacted] Blank
Meter Box #: M5 Y: 1.021 ΔH@: 1.818
Post-Test Leak Rate: 0.003 cfm @ 15 in. Hg.
Post-Test Leak Check: Pitot: NA Orsat: NA

Traverse Point Number	Sampling Time (min)	Clock Time (24-hour clock)	Gas Meter Reading (Vm) ft³	Velocity Head (Δp) in H2O	Orifice Pressure Differential (ΔH) in H2O		Stack Temp. (Ts)	Temperature °F		Impinger Temp. °F	Dry Gas Meter Temp.		Pump Vacuum (in. Hg)
					Desired	Actual		Probe	Filter		Inlet (Tm in °F)	Outlet (Tm out °F)	
~~Blank~~		~~[illegible]~~	~~[illegible]~~	Leak Test									
Blank		1621	931.131	0.004 @ 15"									
				0.004 @ 15"									
			931.874	0.003 @ 15"									
		1721	932.066	0.002 @ 15"									

ΔVm= ____ $\overline{\sqrt{\Delta p}}$= ____ $\overline{\Delta H}$= ____ $\overline{Ts}$= ____ $\overline{Tm}$= ____

SAMPLE RECOVERY DATA

PLANT Waupaca Foundry Run No. I-M29-Blk

DATE 9/8/97 Sample Box No. — Job No. S.414.003

SAMPLE LOCATION Inlet Filter No. 1015

TRAIN PREPARER M Hamilton

SAMPLE RECOVERY PERSON M Hamilton

COMMENTS Includes Front Half Acid Rinse

FRONT HALF

Acetone Container No. ~~I-M29-Blk-F~~ I-M29-Blk-HAcE Liquid Level Marked ✓ Sealed ✓

Filter Container No. I-M29-Blk-Filter Sealed ✓

Description of Filter No Particulate

Samples Stored and Locked ✓

BACK HALF/MOISTURE

Container No. I-M29-Blk-5%10% ; I-M29-Blk-BHAR ; I-M29-Blk-KMnO4 ; I-M29-Blk-HCl

Liquid Level Marked ✓ Sealed ✓

IMP. NO.	CONTENTS	INITIAL VOL (ml)	WEIGHT (grams)		
			INITIAL	FINAL	NET
1	5% /10%	100	730.2	729.6	-0.6
2	5% /10%	100	582.5	581.9	-0.6
3	Empty	0	542.8	542.2	-0.6
4	4% KMnO4/10% H2SO4	100	729.2	729.0	-0.2
5	4% KMnO4/10% H2SO4	100	726.6	726.7	0.1
6	Silica Gel	—	776.5	776.9	0.4
TOTAL			4087.8	4086.3	-1.5

A1

Pacific Environmental Services, Inc.

Dry Molecular Weight Determination

Client/Project: WAUPACA - 5414.003
Date/Time: 9/9/97
Sample Type: Orsat Bag
Ambient Temp. °F: 70

Orsat No.: O-2
Operator: R Kelch
Comments:
Site Location: Dryhouse Inlet

Run No.(s)	Gas	Run 1		Run 2		Run 3		Average Net Volume %	Multiplier	Molecular Weight of Stack Gas, Md (lb/Mole)
		Actual	Net	Actual	Net	Actual	Net			
I-1A	CO_2	10.6	10.6	10.6	10.6			10.6	0.44	4.66
	O_2[a]	21.8	11.2	21.8	11.2			11.2	0.32	3.58
	CO[b]								0.28	
	N_2[c]	100.0	78.2	100.0	78.2			78.2	0.28	21.90
									Md =	30.14

Table 7 Run 1
Average =
CO_2 = 10.75
O_2 = 10.88

Run No.(s)	Gas	Run 1		Run 2		Run 3		Average Net Volume %	Multiplier	Molecular Weight of Stack Gas, Md (lb/Mole)
		Actual	Net	Actual	Net	Actual	Net			
I-1B	CO_2	10.9	10.9	10.9	10.9			10.9	0.44	4.80
	O_2[a]	21.4	10.5	21.5	10.6			10.55	0.32	3.38
	CO[b]								0.28	
	N_2[c]	100.0	78.6	100.0	78.5			78.55	0.28	21.99
									Md =	30.17

Run No (s)	Gas	Run 1		Run 2		Run 3		Average Net Volume %	Multiplier	Molecular Weight of Stack Gas, Md (lb/Mole)
		Actual	Net	Actual	Net	Actual	Net			
I-1C	CO_2								0.44	
	O_2[a]								0.32	
	CO[b]								0.28	
	N_2[c]								0.28	
									Md =	

[a] O_2 Net Volume is O_2 actual reading minus CO_2 actual reading.

[b] CO Net Volume is CO actual reading minus O_2 actual reading.

[c] N_2 Net Volume is 100 minus CO actual reading.

PACIFIC ENVIRONMENTAL SERVICES, INC.

Pacific Environmental Services, Inc.

Dry Molecular Weight Determination

Client/Project: WAUPACA - 5414.003
Date/Time: 9/10/97
Sample Type: Orsat Bag
Ambient Temp. °F: 70

Orsat No.: 0-2
Operator: [illegible]
Comments:
Site Location: Baghouse Inlet / Cupola Outlet

Run No.(s)	Gas	Run 1		Run 2		Run 3		Average Net Volume %	Multiplier	Molecular Weight of Stack Gas, Md (lb/Mole)
		Actual	Net	Actual	Net	Actual	Net			
I-2A	CO_2	11.2	11.2	11.4	11.4			11.3	0.44	4.97
	O_2[a]	20.8	9.6	20.8	9.4			9.5	0.32	3.04
	CO[b]								0.28	
	N_2[c]	100.0	79.2	100.0	79.2			79.2	0.28	22.18
									Md =	30.19

INLET RUN 2 Average

Run No.(s)	Gas	Run 1		Run 2		Run 3		Average Net Volume %	Multiplier	Molecular Weight of Stack Gas, Md (lb/Mole)
		Actual	Net	Actual	Net	Actual	Net			
I-2B	CO_2	11.8	11.8	11.8	11.8			11.8	0.44	5.19
	O_2[a]	21.2	9.4	21.2	9.4			9.4	0.32	3.01
	CO[b]								0.28	
	N_2[c]	100.0	78.8	100.0	78.8			78.8	0.28	22.06
									Md =	30.26

CO_2 = 11.8
O_2 = 9.45

Run No.(s)	Gas	Run 1		Run 2		Run 3		Average Net Volume %	Multiplier	Molecular Weight of Stack Gas, Md (lb/Mole)
		Actual	Net	Actual	Net	Actual	Net			
I-2C	CO_2	11.8	11.8	12.0	12.0			11.9	0.44	5.24
	O_2[a]	21.2	9.4	21.2	9.2			9.3	0.32	2.98
	CO[b]								0.28	
	N_2[c]	100.0	78.8	100.0	78.8			78.8	0.28	22.06
									Md =	30.28

BQ

[a] O_2 Net Volume is O_2 actual reading minus CO_2 actual reading.

[b] CO Net Volume is CO actual reading minus O_2 actual reading.

[c] N_2 Net Volume is 100 minus CO actual reading.

PACIFIC ENVIRONMENTAL SERVICES, INC.

Pacific Environmental Services, Inc.

Dry Molecular Weight Determination

Client/Project: WAUPACA-5414.003
Date/Time: 9/10/97
Sample Type: Orsat Bag
Ambient Temp. °F: 70

Orsat No.: O-2
Operator: R Kolb
Comments:
Site Location: Baghouse Inlet

Run No.(s)	Gas	Run 1		Run 2		Run 3		Average Net Volume %	Multiplier	Molecular Weight of Stack Gas, Md (lb/Mole)
		Actual	Net	Actual	Net	Actual	Net			
I-2D	CO_2	11.4	11.4	11.4	11.4			11.4	0.44	5.02
	O_2[a]	21.0	9.6	21.0	9.6			9.6	0.32	3.07
	CO[b]								0.28	
	N_2[c]	100.0	79.0	100.0	79.0			79.0	0.28	22.12
									Md =	30.21

Run No.(s)	Gas	Run 1		Run 2		Run 3		Average Net Volume %	Multiplier	Molecular Weight of Stack Gas, Md (lb/Mole)
		Actual	Net	Actual	Net	Actual	Net			
I-3A	CO_2	~~11.4~~ 12.0	~~11.4~~ 12.0	12.0	12.0			12.0	0.44	5.28
	O_2[a]	21.0	9.0	21.0	9.0			9.0	0.32	2.88
	CO[b]								0.28	
	N_2[c]	100.0	79.0	100.0	79.0			79.0	0.28	22.12
									Md =	30.28

INLET
average Run 3
CO_2 = 12.4
O_2 = 8.75

Run No.(s)	Gas	Run 1		Run 2		Run 3		Average Net Volume %	Multiplier	Molecular Weight of Stack Gas, Md (lb/Mole)
		Actual	Net	Actual	Net	Actual	Net			
I-3B	CO_2	13.2	13.2	13.0	13.0			13.1	0.44	5.76
	O_2[a]	21.6	8.4	21.6	8.6			8.5	0.32	2.72
	CO[b]								0.28	
	N_2[c]	100.0	78.4	100.0	78.4			78.4	0.28	21.95
									Md =	30.43

[a] O_2 Net Volume is O_2 actual reading minus CO_2 actual reading.

[b] CO Net Volume is CO actual reading minus O_2 actual reading.

[c] N_2 Net Volume is 100 minus CO actual reading.

PACIFIC ENVIRONMENTAL SERVICES, INC.

Pacific Environmental Services, Inc.

Dry Molecular Weight Determination

Client/Project: WAUPACA-5414.003

Date/Time: 9/10/97

Sample Type: Orsat Bag

Ambient Temp. °F: 70

Orsat No.: O-2

Operator: R Kolb

Comments:

Site Location: Baghouse Outlet Inlet

Run No.(s)	Gas	Run 1		Run 2		Run 3		Average Net Volume %	Multiplier	Molecular Weight of Stack Gas, Md (lb/Mole)
I-3C		Actual	Net	Actual	Net	Actual	Net			
	CO_2	12.0	12.0	12.0	12.0			12.0	0.44	5.28
	O_2[a]	21.0	9.0	21.0	9.0			9.0	0.32	2.88
	CO[b]								0.28	
	N_2[c]	100.0	79.0	100.0	79.0			79.0	0.28	22.12
									Md =	30.28

Run No.(s)	Gas	Run 1		Run 2		Run 3		Average Net Volume %	Multiplier	Molecular Weight of Stack Gas, Md (lb/Mole)
I-3D		Actual	Net	Actual	Net	Actual	Net			
	CO_2	12.4	12.4	12.6	12.6			12.5	0.44	
	O_2[a]	21.0	8.6	21.0	8.4			8.5	0.32	
	CO[b]								0.28	
	N_2[c]	100.0	79.0	100.0	79.0			79.0	0.28	
									Md =	

Run No.(s)	Gas	Run 1		Run 2		Run 3		Average Net Volume %	Multiplier	Molecular Weight of Stack Gas, Md (lb/Mole)
		Actual	Net	Actual	Net	Actual	Net			
	CO_2								0.44	
	O_2[a]								0.32	
	CO[b]								0.28	
	N_2[c]								0.28	
									Md =	

[a] O_2 Net Volume is O_2 actual reading minus CO_2 actual reading.

[b] CO Net Volume is CO actual reading minus O_2 actual reading.

[c] N_2 Net Volume is 100 minus CO actual reading.

PACIFIC ENVIRONMENTAL SERVICES, INC.

Appendix A.2

Raw Field Data

Baghouse Outlet

TRAVERSE POINT LOCATION FOR CIRCULAR DUCTS

Plant: WAUPACA Foundry

Date: 9-8-97

Sampling Location: Cupola Outlet

Inside of Far Wall to Outside of Nipple: 95.5"

Inside of Near Wall to Outside of Nipple (Nipple Length): 3.5"

Stack I.D.: 92"

Distance Downstream from Flow Disturbance (Distance B):

25' 300 inches / Stack I.D. = 3.3 dd

Distance Upstream from Flow Disturbance (Distance A):

84' 1008 inches / Stack I.D. = 11.0 dd

Calculated By: [illegible]

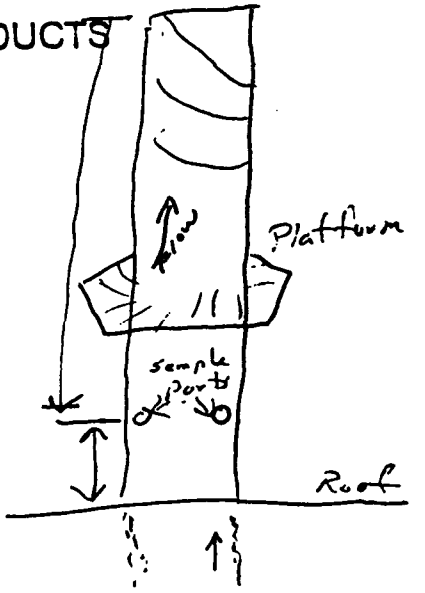

Schematic of Sampling Location

Traverse Point Number	Fraction of Length	Length (inches)	Product of Columns 2 & 3 (To nearest 1/8")	Nipple Length (inches)	Traverse Point Location (Sum of Col. 4 & 5)
1	.021	92"	1.9	3.5"	5.4
2	.067		6.2		9.7
3	.118		10.9		14.4
4	.177		16.3		19.8
5	.250		23.0		26.5
6	.356		32.8		36.3
7	.644		~~69.8~~ 59.2		~~72.5~~ 62.7
8	.750		69.0		72.5
9	.823		75.7		79.2
10	.882		81.1		84.6
11	.933		85.8		[illegible]
12	.979		90.1		93.6

GAS VELOCITY AND VOLUMETRIC FLOW RATE

Plant: Waupaca Foundry — Date: 9-8-97
Sampling Location: Cupola Outlet — Clock Time: 1310
Run #: Preliminary — Operators: TA / BE
Barometric Pressure, in. Hg: 29.55 — Static Pressure, in. H_2O: .05
Moisture, %: 8 — Molecular wt., Dry: ____ — Pitot Tube, Cp: .84
Stack Dimension, in. Diameter or Side 1: 92" — Side 2: —
Wet Bulb, °F: — — Dry Bulb, °F: —

Cyclonic Flow check Degrees	Direction	Traverse Point Number	Velocity Head in. H_2O	Stack Temp. °F
9°	CW	East 1	.14	251
6°	CW	2	.16	252
0°	—	3	.18	256
2°	CW	4	.26	258
3°	CW	5	.32	258
2°	CW	6	.33	250
9°	CC	South 1	.12	250
9°	CC	2	.13	253
15°	CC	3	.21	259
15°	CC	4	.29	254
18°	CC	5	.32	255
26°	CC	6	.31	256
2°	CC	West 1	.10	255
13°	CC	2	.10	257
28°	CC	3	.11	259
31°	CC	4	.16	259
33°	CC	5	.19	255
30°	CC	6	.20	250
0	—	North 1	.10	252
2°	CC	2	.09	255
9°	CC	3	.11	260
24°	CC	4	.09	261
38°	CC	5	.09	260
42	CC	6	.08	257
			$\overline{\sqrt{\Delta P}}$ = .4014	$\overline{T_s}$ = 256

Average = 15.3%

$Md = (0.44 \times \%CO_2) + (0.32 \times \%O_2) + (0.28 \times \%N_2)$

$Md = (0.44 \times \quad) + (0.32 \times \quad) + (0.28 \times \quad)$

$Md = 29.32$

$Ms = Md \times (1 - \frac{\%H_2O}{100}) + 18 (\frac{\%H_2O}{100})$

$Ms = (\quad) \times (1 - \frac{\quad}{100}) + 18 (\frac{\quad}{100})$

$Ms = 28.75$

$\overline{T_s} = \quad °F = \quad °R \ (°F + 460)$

$Ps = Pb + \frac{S.P.}{13.6} = (\quad) + \frac{\quad}{13.6}$

$Ps = 29.55$ in. Hg

$\overline{\sqrt{\Delta P}} = \rightarrow$

$Vs = 85.49 \times Cp \times \overline{\sqrt{\Delta P}} \times \sqrt{\frac{Ts\ (°R)}{Ps \times Ms}}$

$Vs = 85.49 \times (\quad) \times (\quad) \times \sqrt{\quad}$

$Vs = 26.45$ ft/s

$As = 46.16$ ft²

$Qs = Vs \times As \times 60$ s/m

$Qs = \quad \times \quad \times 60$

$Qs = 73,272$ acfm

$Qs_{std} = Qs \times 17.647 \times \frac{Ps}{Ts} \times (1 - \frac{\%H_2O}{100})$

$Qs_{std} = \quad \times 17.647 \times \frac{\quad}{\quad} \times (1 - \frac{\quad}{100})$

$Qs_{std} = 50,729$ dscfm

FIELD DATA SHEET

Plant: Waupaca
Sampling Location: Cupola Outlet
Run Number: Preliminary Date: 8-9-97
Pretest Leak Rate: .005 cfm @ 15 in. Hg.
Pretest Leak Check: Pitot: – Orsat: –

Sample Type: M-4 Operator: TA/GG
Pbar: 29.55 Ps: -.05
CO2: 3 O2: 17
Probe Length/Type: 5'SS Pitot #: –
Stack Diameter: 92" As: 46.2 ft²

Nozzle ID: – Thermocouple #: –
Assumed Bws: .05 Filter #: M-1
Meter Box #: 13 Y: .9417 ΔH@: 1.810
Post-Test Leak Rate: .018 cfm @ 5 in. Hg.
Post-Test Leak Check: Pitot: – Orsat: –

Traverse Point Number	Sampling Time (min)	Clock Time (24-hour clock)	Gas Meter Reading (Vm) ft³	Velocity Head (Δp) in H2O	Orifice Pressure Differential (ΔH) in H2O		Stack Temp. (Ts)	Temperature °F		Impinger Temp. °F	Dry Gas Meter Temp.		Pump Vacuum (in. Hg)
					Desired	Actual		Probe	Filter		Inlet (Tm in °F)	Outlet (Tm out °F)	
	0	1642	631.608										
	10	1652	639.7	–	1.8	1.8	251	232	260	55	90	89	3
	20	1702	647.740	–	1.8	1.8	261	249	261	57	93	90	4
				TA –	~~1.8~~	1.8	262	~~245~~	~~261~~	~~59~~	~~106~~	~~95~~	~~4~~

ΔVm= 16.132 $\overline{\sqrt{\Delta p}}$= – $\overline{\Delta H}$= 1.8 $\overline{Ts}$= 256 $\overline{Tm}$= 91

Vlc = 19.1

V_{MS} = 14.5 %H2O = 5.8 %

SAMPLE RECOVERY DATA

PLANT WAUPACA Run No. Prelim Moisture

DATE 9/8/97 Sample Box No. N-7 Job No. 5404.003

SAMPLE LOCATION Baghouse Outlet Filter No. —

TRAIN PREPARER [illegible]

SAMPLE RECOVERY PERSON [illegible]

COMMENTS Moisture Train

FRONT HALF

Acetone Container No. _____ Liquid Level Marked _____ Sealed _____

Filter Container No. _____ Sealed _____

Description of Filter _____

Samples Stored and Locked _____

BACK HALF/MOISTURE

Container No. _____

Liquid Level Marked _____ Sealed _____

IMP. NO.	CONTENTS	INITIAL VOL (ml)	WEIGHT (grams)		
			INITIAL	FINAL	NET
1	DI H_2O	600	566.7	572.7	6.0
2	DI H_2O	600	578.4	580.7	2.3
3	Empty	0	451.8	458.7	6.9
4	Silica Gel	250	677.1	681.0	3.9
5					~~0.0~~
6					
TOTAL			2274.0	2293.1	19.1

VBE

1-1-27

.31 2

FIELD DATA SHEET

Plant: Waupaca
Sampling Location: Baghouse Outlet
Run Number: M29-0-1 Date: 9-9-97
0-M29-1 (CHE) 1/21/98
Pretest Leak Rate: .0003 cfm @ 11.5 in. Hg.
Pretest Leak Check: Pitot: O.K. Orsat: N/A
at 9:55

Sample Type: M-29 Operator: Malone
Pbar: 29.50 Ps: +0.20
CO2: 9.5% O2: 9.5%
Probe Length/Type: 6' SS/Glass Pitot #: D-72-07
Stack Diameter: 92" As: 46.16

Nozzle ID: 0.311 Thermocouple #: D-100-16-4
Assumed Bws: 6% Filter #: 301675
Meter Box #: M5-3 Y: 1.028 ΔH@: 1.796
Post-Test Leak Rate: ____ cfm @ ____ in. Hg.
Post-Test Leak Check: Pitot: ____ Orsat: N/A

Traverse Point Number	Sampling Time (min)	Clock Time (24-hour clock)	Gas Meter Reading (Vm) ft³	Velocity Head (Δp) in H2O	Orifice Pressure Differential (ΔH) in H2O Desired	Actual	Stack Temp. (Ts)	Temperature °F Probe	Filter	Impinger Temp. °F	Dry Gas Meter Temp. Inlet (Tm in °F)	Outlet (Tm out °F)	Pump Vacuum (in. Hg)	
S 1	0	10:29	250.918											
	5		254.57	.19	1.3	1.3	221°	248°	242°	48°	75°	75°	3"	
2	10		257.62	.21	1.47	1.5	243°	247°	253°	43°	78°	75°	3.5"	
	15		261.13	.22	1.54	1.5	245°	249°	249°	42°	82°	75°	3.5"	
3	20		264.74	.22	1.54	1.5	246°	248°	252°	45°	87°	76°	3.5"	
	25		268.08	~~.38~~ .38	2.66	2.7	253°	250	250°	44°	89°	76°	4.5"	
4	30		272.25	.36	2.52	2.50	250°	251°	251°	43°	90°	77°	4.5"	
	35		275.78	.21	1.47	1.5	248°	249°	255	45°	90°	78°	3.5"	
5	40		278.10	.09	0.63	0.63	245°	249°	252°	47°	89°	79°	2"	
	45		280.92	.14	0.98	0.98	244°	248°	251°	49°	88°	79°	3"	
6	50		282.87	.07	0.49	0.49	242°	246°	251°	50°	87°	80°	2"	
	55		289.60	.05	0.35	0.35	241°	255°	251°	50°	86°	80°	2"	
W 1	60	11:29 / 11:39	288.325 / 288.352	.05	0.35	0.35	240°	251°	249°	50°	85°	80°	2"	-0.027
	65	11:44	287.67	.03	0.21	0.21	180°	256°	262°	54°	82°	80°	2"	
2	70		289.50	.03	0.21	0.21	200°	253°	251°	52°	85°	80°	2"	
	75		290.61	.04	0.28	0.28	214°	252°	253°	48°	86°	80°	2"	
3	80		292.12	.04	0.28	0.28	220°	252°	255°	46°	86°	81°	2"	
	85		293.52	.03	0.21	0.21	230°	255°	248°	46°	86°	81°	2"	
4	90		295.09	.04	0.28	0.28	235°	254°	250°	48°	85°	81°	2"	
	95		296.48	.03	0.21	0.21	233°	251°	247°	48°	83°	81°	2"	
5	100		297.85	.03	0.21	0.21	233°	255°	252°	49°	83°	81°	2"	
	105		299.20	.03	0.21	0.21	234°	251°	248°	49°	84°	81°	2"	
6	110		300.57	.03	0.21	0.21	233°	252°	252°	48°	84°	81°	2"	
	115		301.78	.02	0.14	0.14	233°	251°	255°	50°	84°	81°	2"	
N 1	120	12:39 / 12:52	302.922 / 302.947	.02	0.14	0.14	232°	251°	247°	51°	83°	80°	2"	-0.025
	125	12:57	304.11	.02	0.14	0.14	223°	252°	246°	53°	81°	80°	2"	
2	130	13:02	305.27	.02	0.14	0.14	224°	251°	249°	48°	84°	80	2"	

ΔVm= ____ $\overline{\sqrt{\Delta p}}$= .28 ____ $\overline{\Delta H}$= ____ $\overline{Ts}$= ____ $\overline{Tm}$= ____

112.3

pg 2 of 2

FIELD DATA SHEET

Plant: Waypaca
Sampling Location: Baghouse Outlet
Run Number: M29-0-1 (0-M29-1 CMC 11/21/98) Date: 9-9-97
Pretest Leak Rate: .0003 cfm @ 11.5 in. Hg.
Pretest Leak Check: Pitot: ✓ at 9" Orsat: N/A

Sample Type: M-29 Operator: Malone
Pbar: 29.50 Ps: +0.20
CO2: 9.5% O2: 9.5%
Probe Length/Type: 6' SS/Glass Pitot #: D-72-07
Stack Diameter: 92" As: 46.16

Nozzle ID: 0.311 Thermocouple #: D-100-16-4
Assumed Bws: 6% Filter #: 301675
Meter Box #: M-5-3 Y: 1.028 ΔH@: 1.796
Post-Test Leak Rate: .0006 cfm @ 8.5 in. Hg.
Post-Test Leak Check: Pitot: O.K. at 5"✓ Orsat: N/A

Traverse Point Number	Sampling Time (min)	Clock Time (24-hour clock)	Gas Meter Reading (Vm) ft³	Velocity Head (Δp) in H2O	Orifice Pressure Differential (ΔH) in H2O Desired	Orifice Pressure Differential (ΔH) in H2O Actual	Stack Temp. (Ts)	Temperature °F Probe	Temperature °F Filter	Impinger Temp. °F	Dry Gas Meter Temp. Inlet (Tm in °F)	Dry Gas Meter Temp. Outlet (Tm out °F)	Pump Vacuum (in. Hg)
N2	135	13:07	306.42	0.02	0.14	0.14	226°	250°	254°	47°	85°	80°	2"
3	140		307.77	0.03	0.21	0.21	227°	251°	253°	46°	85°	80°	2"
	145		308.92	0.02	0.14	0.14	228°	254	246°	45°	86°	80°	2"
4	150		310.05	0.02	0.14	0.14	227°	252°	246°	47°	85°	80°	2"
	155		311.18	0.02	0.14	0.14	228°	251°	249°	48°	85°	80°	2"
5	160		312.37	0.02	0.14	0.14	228°	254°	255°	48°	85°	80°	2"
	165		313.72	0.03	0.21	0.21	229°	254°	247°	48°	86°	81°	2"
6	170		314.86	0.02	0.14	0.14	228°	253°	252°	48°	87°	82°	2"
	175	↓	316.23	0.03	0.21	0.21	229°	253°	248°	48°	87°	82°	2"
E 1	180	13:52 ~~14:03~~	317.371 ~~317.411~~	0.02	0.14	0.14	230°	255°	248°	49°	86°	82°	2"
	185		319.29	0.06	0.42	0.42	223°	254°	246°	52°	83°	82°	2"
2	190		322.04	0.13	0.91	0.91	224°	249°	247°	48°	90°	82°	2"
	195		324.31	0.09	0.63	0.63	226°	253°	248°	48°	93°	82°	2"
3	200		326.60	0.09	0.63	0.63	230°	253°	248	51°	93°	83°	2"
	205		328.86	0.09	0.63	0.63	231°	249°	247°	48°	93°	83°	2"
4	210		331.17	0.09	0.63	0.63	232°	253°	256°	47°	94°	84°	2"
	215		333.45	0.09	0.63	0.63	232°	254°	248°	47°	94°	84°	2"
5	220		335.48	0.07	0.49	0.49	232°	253°	252°	48°	94°	85°	2"
	225		337.69	0.08	0.56	0.56	231°	252°	252°	48°	93°	85°	2"
6	230		339.60	0.07	0.49	0.49	231°	249°	254°	49°	93°	86°	2"
	235	↓	341.33	0.05	0.35	0.35	232°	251°	253°	50°	93°	86°	2"
END Run	240	15:03	343.050	0.05	0.35	0.35	231°	249°	254°	51°	93°	86°	2"
			92.132										
			− 0.092	√Δp = 0.253		Avg ΔH = .553	Avg 230.77						
			92.040										

ΔVm = 92.040 ✓ √Δp = .253 ✓ ΔH = .552 Ts = ____ Tm = 83.625

Act H2O = 5.505 84 1.. 117.3 gro... Moisture

TD

SAMPLE RECOVERY DATA

PLANT Wampum Faraday Run No. O-M29-1

DATE 8/9/97 Sample Box No. — Job No. S 414.003

SAMPLE LOCATION Outlet Filter No. 301675

TRAIN PREPARER M Hamilton

SAMPLE RECOVERY PERSON M Hamilton

COMMENTS Front Half Acid Rinse -> O-M29-1-FHAR

FRONT HALF

Acetone Container No. O-M29-1-FHAcet Liquid Level Marked ✓ Sealed ✓

Filter Container No. O-M29-1-Filter Sealed ✓

Description of Filter Light Tan Rings

Samples Stored and Locked ✓

BACK HALF/MOISTURE

Container No. O-M29-1-5%10% ; O-M29-1-BHAR ; O-M29-1-KMnO4 ; O-M29-1-HCl

Liquid Level Marked ✓ Sealed ✓

IMP. NO. _	CONTENTS	INITIAL VOL (ml)	WEIGHT (grams)		
			INITIAL	FINAL	NET
1	5% HNO3/10% H2O2	100	722.0	776.6	54.6
2	5% HNO3/10% H2O2	100	675.8	690.4	14.6
3	Empty	0	591.0	597.5	6.5
4	4% KMnO4/10% H2SO4	100	727.7	734.4	6.7
5	4% KMnO4/10% H2SO4	100	731.7	739.2	7.5
6	Silica Gel	—	846.9	868.8	22.4
TOTAL			4295.1	4406.9	112.8 BE

BE

FIELD DATA SHEET

Plant: Waupaca
Sampling Location: Baghouse Outlet
Run Number: M29-0-2 (O-M29-2 CMD 1/21/98) Date: 9-10-97
Pretest Leak Rate: .0065 cfm @ 11 in. Hg.
Pretest Leak Check: Pitot: O.K. Orsat: N/A

Sample Type: M-29 Operator: Malone
Pbar: 29.58 Ps: +0.20
CO2: 12% O2: 10%
Probe Length/Type: 6' SS/Glass Pitot #: D-72-07
Stack Diameter: 92" As: 46.16

Nozzle ID: 0.311 Thermocouple #: D-100.16-4
Assumed Bws: 5.5% Filter #: 301640
Meter Box #: M-5-3 Y: 1.028 ΔH@: 1.796
Post-Test Leak Rate: .004 cfm @ 8 in. Hg.
Post-Test Leak Check: Pitot: o.k. Orsat: N/A 7.3 K

Traverse Point Number	Sampling Time (min)	Clock Time (24-hour clock)	Gas Meter Reading (Vm) ft³	Velocity Head (Δp) in H2O	Orifice Pressure Differential (ΔH) in H2O Desired	Actual	Stack Temp. (Ts)	Temperature °F Probe	Filter	Impinger Temp. °F	Dry Gas Meter Temp. Inlet (Tm in °F)	Outlet (Tm out °F)	Pump Vacuum (in. Hg)	
S 1	0	08:10	343.517											
	5		346.32	.14	1.022	1.0	225°	253°	247°	47°	77°	71°	2"	74
2	10		349.25	.15	1.095	1.1	225°	252°	248°	47°	84°	71°	2"	77
	15		352.42	.19	1.387	1.4	240°	255°	250°	47°	85°	72°	2"	79
3	20		355.42	.16	1.168	1.2	240°	253°	252°	46°	87°	73°	2"	80
	25		358.38	.15	1.095	1.1	240°	254°	250°	48°	87°	74°	2"	80
4	30		361.61	.19	1.387	1.4	240°	255°	258°	50°	88°	75°	2"	82
	35		364.77	.18	1.314	1.3	242°	254°	249°	48°	88°	75°	2"	82
5	40		367.78	.16	1.168	1.2	242°	253°	254°	47°	88°	76°	2"	82
	45		370.29	.11	0.803	0.8	242°	256°	253°	47°	89°	76°	2"	82
6	50		373.13	.14	1.022	1.0	243°	255°	252°	47°	88°	77°	2"	83
	55		375.56	.10	0.73	0.73	244°	253°	256°	48°	88°	78°	2"	83
E 1	60	09:10 / 09:54	377.984 / 378.022	.10	0.73	0.73	246°	253°	256°	48°	88°	78°	2"	83 .038
	65		382.31	.33	2.4	2.4	249°	251°	247°	46°	81°	78°	3"	80
2	70		386.87	.37	2.7	2.7	250°	253°	248°	41°	90°	79°	3"	85
	75		391.68	.41	2.993	3.0	260°	254°	247°	42°	94°	80°	3.5"	87
3	80		396.75	.47	3.431	3.4	263°	254°	253°	44°	95°	81°	4"	88
	85		401.62	.43	3.139	3.1	262°	253°	248°	46°	96°	82°	3.5"	89
4	90		406.49	.43	3.139	3.1	260°	252°	249°	46°	97°	82°	3.5"	89
	95		410.57	.31	2.263	2.3	257°	253°	252°	47°	98°	83°	3"	90
5	100		414.47	.27	1.971	2.0	258°	252°	254°	47°	97°	84°	3"	90
	105		418.19	.25	1.825	1.8	262°	250°	253°	48°	97°	84°	3"	90
6	110		421.82	.25	1.825	1.8	259°	248°	249	48°	97°	84°	3"	90
	115		425.14	.19	1.387	1.4	257°	252°	247°	49°	98°	85°	2"	90
N 1	120	10:54 / 11:03	428.179 / 428.231	.16	1.168	1.2	257°	251°	250°	50°	98°	86°	2"	92 .052
	125	11:08	430.41	.08	.584	.59	257°	252°	251°	50°	90°	86°	2"	88
2	130	11:13	432.63	.08	.584	.59	256°	253°	252°	45°	92°	86°	2"	89

Stack gas Molecular Weight 27.142 DS ΔVm= 142.003 √Δp= 0.389 ΔH= 1.211 Ts= 253.208 TSO=102.544 Tm= 89.125 2204"

Plant Name: Waupaca **Test Date:** 9-10-97

Run Number: ~~M29-0-2~~ 0-M29-2 11/21/98 **Operator:** Malone

Traverse Point Number	Sampling Time, (min.)	Clock Time (24-hour clock)	Gas Meter Reading (V_m) ft³	Velocity Head (ΔP_s) in. H_2O	Orifice Pres. Differential (ΔH) in. H_2O Desired	Actual	Stack Temp. °F (T_s)	Probe Temp. / Filter Temp. °F	Impinger Temp. °F	Dry Gas Meter Temp. Inlet (T_{in}) °F	Outlet (T_{out}) °F	Pump Vacuum In. Hg	
N 2	135	11:18	434.85	.08	.584	.59	255°	251° / 253°	44°	93°	86°	2"	89
3	140		437.08	.08	.584	.59	254°	251° / 252°	45°	93°	87°	2"	90
	145		439.29	.08	.584	.59	257°	252° / 253	44°	94°	87°	2"	91
3	150		441.19	.06	.438	.44	256°	254° / 255°	44°	93°	87°	2"	90
	155		443.11	.06	.438	.44	257°	253° / 247°	45°	93°	87°	2"	90
4	160		445.05	.06	.438	.44	257°	248° / 247°	47°	95°	87°	2"	91
	165		446.82	.05	.365	.365	257°	250° / 256°	48°	96°	88°	2"	92
5	170		449.05	.08	.584	.59	258°	250° / 254°	48°	96°	88°	2"	92
	175		451.51	.10	0.73	.73	260°	253° / 250°	48°	96°	88°	2"	92
6	180	12:05 / 12:15	453.950 / 453.988	.10	0.73	.73	260°	249° / 250°	47°	97°	89°	2"	93 .048
	185		456.98	.15	1.095	1.1	255°	249° / 245°	47°	95°	89°	2"	92
W 1	190		459.99	.15	1.095	1.1	254°	252° / 248°	43°	101°	90°	2"	95
	195		463.10	.17	1.241	1.2	260°	249° / 249°	43°	102°	90°	2"	96
2	200		466.22	.17	1.241	1.2	260°	248 / 245°	44°	104°	92°	2"	98
	205		469.04	.13	0.949	0.95	260°	252° / 249°	45°	104°	92°	2"	98
3	210		471.86	.13	0.949	0.95	259°	249° / 248°	46°	104°	93°	2"	98
	215		474.61	.11	0.803	0.80	258°	249° / 252°	46°	105°	94°	2"	99
4	220		477.22	.11	0.803	0.80	260°	252° / 252°	47°	104°	94°	2"	99
	225		479.65	.10	0.73	.73	260°	250° / 248°	48°	103°	94°	2"	99
5	230		481.92	.09	0.657	.66	261°	252° / 246°	49°	101°	94°	2"	98
	235		483.89	.06	.438	.44	260°	250° / 249	50°	101°	93°	2"	97
6	240	13:15	485.658	.05	.365	.365	260°	251° / 247	51°	97°	92°	2"	95

-.138 6.791 15.80 5678.0 2074. (Ps 1) -.090

SAMPLE RECOVERY DATA

PLANT Wauseca Foundry Run No. O-M29-2

DATE 9/10/97 Sample Box No. — Job No. S 414.003

SAMPLE LOCATION Outlet Filter No. 301640

TRAIN PREPARER M Hamilton

SAMPLE RECOVERY PERSON M Hamilton

COMMENTS Front half Acid Rinse → O-M29-2-FHA

FRONT HALF

Acetone Container No. O-M29-2-FHAR Liquid Level Marked ✓ Sealed ✓

Filter Container No. O-M29-2-Filter Sealed ✓

Description of Filter Light Tan Rings

Samples Stored and Locked ✓

BACK HALF/MOISTURE

Container No. O-M29-2-5%10%; O-M29-2-BHAR; O-M29-2-KMnO4; O-M29-2-HCl

Liquid Level Marked ✓ Sealed ✓

IMP. NO.	CONTENTS	INITIAL VOL (ml)	WEIGHT (grams)		
			INITIAL	FINAL	NET
1	5% HNO3/10% H2O2	100	733.2	770.2	37.0
2	5% HNO3/10% H2O2	100	651.3	671.8	20.5
3	Empty	0	552.2	553.9	1.7
4	4% KMnO4/10% H2SO4	100	621.8 + 107.7 = 729.5	688.4	-41.1
5	4% KMnO4/10% H2SO4	100	623.8 + 107.7 = 731.5	769.7	38.2
6	Silica Gel	—	910.1	932.9	22.8
TOTAL			4307.8	4386.9	79.1

Description of Impinger Contents

FIELD DATA SHEET

Plant: Waupaca
Sampling Location: Baghouse Outlet
Run Number: M29-O-3 (O-M29-3 Emc 11/21/98) Date: 9-10-97
Pretest Leak Rate: .0005 cfm @ 11 in. Hg.
Pretest Leak Check: Pitot: ok. Orsat: N/A

Sample Type: M-29 Operator: Malone
Pbar: 29.58 Ps: +0.20
CO2: 12% O2: 10%
Probe Length/Type: 6' SS/Glass Pitot #: D-72-07
Stack Diameter: 92" As: 46.16

Nozzle ID: 0.311 Thermocouple #: D-100-16-4
Assumed Bws: ___ Filter #: 301632
Meter Box #: M5-3 Y: 1.028 ΔH@: 1.796
Post-Test Leak Rate: .002 cfm @ 12 in. Hg.
Post-Test Leak Check: Pitot: ok. Orsat: N/A

K = 7.0

Traverse Point Number	Sampling Time (min)	Clock Time (24-hour clock)	Gas Meter Reading (Vm) ft³	Velocity Head (Δp) in H2O	Orifice Pressure Differential (ΔH) in H2O Desired	Actual	Stack Temp. (Ts)	Temperature °F Probe	Filter	Impinger Temp. °F	Dry Gas Meter Temp. Inlet (Tm in °F)	Outlet (Tm out °F)	Pump Vacuum (in. Hg)	
W 1	0	15:20	485.908											
	5		489.03	.16	1.12	1.10	236°	252°	254°	55°	95°	90°	2"	92
2	10		492.27	.16	1.12	1.1	238°	253°	252°	54°	99°	90°	2"	95
	15		495.49	.18	1.26	1.3	257°	249°	246°	44°	101°	90°	3"	95
3	20		498.71	.15	1.05	1.1	254°	249°	252°	45°	101°	90°	3"	96
	25		501.57	.13	0.91	.91	254°	248°	253°	45°	101°	91°	3"	96
4	30		503.99	.11	.77	.77	251°	249°	249°	45°	100°	91°	2"	96
	35		506.22	.08	.56	.56	250°	252°	255°	46°	99°	91°	2"	95
top 1 min into Run → 5	40	* 16:01 / 16:20	508.90	.08	.56	.56	249°	250°	254°	47°	97°	91°	2"	94
	45		510.26	.05	.35	.35	247°	250°	253°	47°	96°	91°	2"	94
6	50		511.87	.07	.49	.49	247°	251°	251°	51°	91°	88°	2"	90
	55		513.40	.04	.28	.28	248°	250°	252°	46°	92°	87°	2"	90
S 1	60	16:39 / 16:96	515.254 / 515.322	.06	.42	.42	249°	252°	251°	44°	92°	86°	2"	89 .068
	65		517.45	.08	.56	.56	249°	253°	245°	44°	87°	84°	2"	86
2	70		519.32	.06	.42	.42	249°	250°	247°	43°	89°	84°	2"	87
	75		521.68	.11	.77	.77	250°	252°	251°	42°	90°	83°	2"	87
3	80		523.81	.08	.56	.56	250°	252°	247°	42°	91°	83°	2"	87
	85		525.92	.08	.56	.56	252°	255°	247°	43°	91°	83°	2"	87
4	90		528.04	.08	.56	.56	252°	249°	246°	43°	90°	83°	2"	87
	95		530.16	.08	.56	.56	254°	250°	251°	44°	90°	82°	2"	86
5	100		532.13	.07	.49	.49	254°	252°	253°	44°	90°	82°	2"	86
	105		533.97	.06	.42	.42	254°	253°	250°	45°	90°	82°	2"	86
6	110		535.80	.06	.42	.42	253°	250°	248°	46°	89°	82°	2"	86
	115		537.66	.06	.42	.42	253°	251°	249°	46°	89°	82°	2"	85
E 1	120	17:46 / 18:19	539.501 / 539.550	.06	.42	.42	252°	250°	247°	46°	89°	82°	2"	85 .049
	125	18:19	542.90	.22	1.546	1.5	253°	251°	252°	41°	88°	80°	3"	84
2	130	18:29	546.38	.22	1.546	1.6	251°	251°	253°	40°	92°	80°		86

* process down 16:01 (91 min) Restart 16:20

ΔVm = 135.043 ✓ss ~~0.587~~ 0.806 ΔH = 1.101 ✓ Ts = ~~248.708~~ 254 Tm = 87.708 ✓

+.177 17.877 0.3806 18.14 ss 6506. ✓cc 88 ✓ RL

Plant Name: Waupaca **Test Date:** 9-10-97

Run Number: ~~M29-0-3~~ O-M29-3 cmc 1/21/98 **Operator:** Malone

Traverse Point Number	Sampling Time, (min.)	Clock Time (24-hour clock)	Gas Meter Reading (V_m) ft³	Velocity Head (ΔP_s) in. H_2O	Orifice Pres. Differential (ΔH) in. H_2O Desired	Actual	Stack Temp. °F (T_s)	Probe Temp. / Filter Temp. °F	Impinger Temp. °F	Dry Gas Meter Temp. Inlet ($T_{m_{in}}$) °F	Outlet ($T_{m_{out}}$) °F	Pump Vacuum In. Hg	
E 2	135	/ 18:29	549.96	.25	1.75	1.75	253°	252° / 249°	41°	94°	81°	3"	87
3	140	/	553.51	.25	1.75	1.75	255°	248° / 249°	42°	94°	81°	3.5"	87
	145	/	557.23	.27	1.89	1.9	255°	251° / 255°	43°	94°	81°	4"	87
4	150	/	560.99	.28	1.96	2.0	257°	251° / 255°	44°	94°	~~78°~~ 81°	4"	87
	155	/	564.53	.22	1.54	1.5	258°	251° / 256°	45°	94°	81°	4"	87
5	160	/	567.78	.22	1.54	1.5	259°	252° / 251°	46°	93°	81°	4"	87
	165	/	570.72	.15	1.05	1.1	258°	253° / 256°	45°	93°	81°	3"	87
6	170	/	573.74	.15	1.05	1.1	258°	249° / 248°	46°	92°	81°	3"	87
	175	/ ↓	576.51	.14	.98	.98	257°	249° / 251°	46°	91°	80°	2"	86
N 1	180	/ ~~19:14~~ 19:21	~~579.398~~ 579.358	.14	.98	.98	255°	250° / 249°	46°	90°	80°	2"	85 .06
	185		583.38	.31	2.17	2.2	252°	254° / 250°	46°	83°	79°	4"	81
2	190	/	587.42	.31	2.17	2.2	252°	251° / 255°	45°	92°	79°	4"	86
	195	/	591.67	.34	2.38	2.4	258°	253° / 257°	46°	93°	79°	4"	86
3	200	/	595.66	.32	2.24	2.2	259°	254° / 258°	47°	93°	79°	4"	86
	205	/	599.59	.29	2.03	2.0	261°	252° / 247°	48°	93°	79°	4"	86
4	210	/	603.48	.30	2.1	2.1	262°	253° / 248°	48°	92°	79°	4"	86
	215	/	607.10	.25	1.75	1.75	263°	251° / 249°	48°	92°	79°	4"	86
5	220	/	610.41	.22	1.54	1.5	261°	250° / 252°	49°	91°	79°	4"	85
	225	/	613.37	.17	1.19	1.2	259°	254° / 252°	49°	90°	79°	3"	85
6	230	/	616.11	.14	.98	.98	259°	251° / 249°	48°	89°	78°	3"	84
	235	/ ↓	618.78	.13	.91	.91	258°	251° / 254°	49°	87°	78°	3"	83
	240	/ 20:21	621.128	.10	.70	.70	257	254° / 253°	49°	87°	77°	3"	82
		/						/					
		/						/					
				10.291		34.7							
							5432.0						

SAMPLE RECOVERY DATA

PLANT Waupaca Foundry Run No. 0-M29-3

DATE 9/10/97 Sample Box No. — Job No. 5414.003

SAMPLE LOCATION Outlet Filter No. 301632

TRAIN PREPARER M Hamilton

SAMPLE RECOVERY PERSON M Hamilton

COMMENTS Front Half Acid Rinse → 0-M29-3-FHAR

FRONT HALF

Acetone Container No. 0-M29-3-FHAcc Liquid Level Marked ✓ Sealed ✓

Filter Container No. 0-M29-3-Filter Sealed ✓

Description of Filter Light Tan Rings

Samples Stored and Locked ✓

BACK HALF/MOISTURE

Container No. 0-M29-3-5%10% ; 0-M29-3-BHAR ; 0-M29-3-KMnO4 ; 0-M29-3-HCl

Liquid Level Marked ✓ Sealed ✓

IMP. NO.	CONTENTS	INITIAL VOL (ml)	WEIGHT (grams)		
			INITIAL	FINAL	NET
1	5% HNO_3/10% H_2O_2	100	730.0	776.0	46.0
2	5% HNO_3/10% H_2O_2	100	680.5	691.9	11.4
3	Empty	0	592.5	595.2	2.7
4	4% $KMnO_4$/10% H_2SO_4	100	732.4	732.8	0.4
5	4% $KMnO_4$/10% H_2SO_4	100	730.1	730.3	0.2
6	Sil Gel	—	860.2	880.3	20.1
TOTAL			4325.7	4406.5	80.8

SAMPLE RECOVERY DATA

PLANT Waupaca Foundry Run No. O-M29-Blk

DATE 9/8/97 Sample Box No. — Job No. S414.003

SAMPLE LOCATION Outlet Filter No. 301642

TRAIN PREPARER M Hamilton

SAMPLE RECOVERY PERSON M Hamilton

COMMENTS Includes Front Half Acid Rinse

FRONT HALF

Acetone Container No. O-M29-Blk-FHAc Liquid Level Marked ✓ Sealed ✓

Filter Container No. 301642 Sealed ✓

Description of Filter No Particulate

Samples Stored and Locked ✓

BACK HALF/MOISTURE

Container No. O-M29-Blk-5%10%; O-M29-Blk-BHAR; O-M29-Blk-KMnO4; O-M29-Blk-HCl

Liquid Level Marked ✓ Sealed ✓

IMP. NO.	CONTENTS	INITIAL VOL (ml)	WEIGHT (grams)		
			INITIAL	FINAL	NET
1	5%/10%	100	725.1	724.8	-0.3
2	5%/10%	100	652.7	652.7	0.0
3	Empty	0	551.1	551.1	0.0
4	4% KMnO4/10% H2SO4	100	726.4	726.4	0.0
5	4% KMnO4/10% H2SO4	100	727.8	727.8	0.0
6	5:1 Gel	—	909.9	910.8	0.9
TOTAL			4293.0	4293.6	0.6

BE

A1

FIELD DATA SHEET

π 13.4

Plant: WAUPACA FOUNDRY
Sampling Location: CUPOLA OUTLET
Run Number: M23 (BO-23-1 CMC 11/21/98)
Date: 9-9-97
Pretest Leak Rate: .007 cfm @ 15 in. Hg.
Pretest Leak Check: Pitot: ✓ Orsat: ✓

Sample Type: M23
Operator: GL
Pbar: 29.5
Ps: +.20
CO2: 9
O2: 12
Probe Length/Type: 5' GLASS
Pitot #: 5E
Stack Diameter: 92
As:

Nozzle ID: .34
Thermocouple #: TSB
Assumed Bws: .005
Filter #: BO-23-1
Meter Box #: RMB15
Y: 1.010
ΔH@: 1.85
Post-Test Leak Rate: .001 cfm @ 8 in. Hg.
Post-Test Leak Check: Pitot: ✓ Orsat: ✓

Traverse Point Number	Sampling Time (min)	Clock Time (24-hour clock)	Gas Meter Reading (Vm) ft³	Velocity Head (Δp) in H2O	Orifice Pressure Differential (ΔH) in H2O Desired	Actual	Stack Temp. (Ts)	Temperature °F Probe	Filter	Impinger Temp. °F	Dry Gas Meter Temp. Inlet (Tm in °F)	Outlet (Tm out °F)	Pump Vacuum (in. Hg)
	0	1029	577.051										
N 1	5	1034	579.085	.05	.5	.5	270	243	246	87	81	81	2
2	10	1039	581.101	.05	.5	.5	251	252	246	63	81	81	2
	15	1044	583.023	.05	.5	.5	244	252	251	62	83	81	2
3	20	1049	585.147	.05	.5	.5	245	242	244	60	84	81	2
	25	1054	587.045	.05	.5	.5	242	246	250	61	86	82	3
4	30	1059	589.110	.05	.5	.5	244	247	250	61	87	82	3
	35	1104	591.770	.08	.8	.8	249	253	252	62	88	82	4
5	40	1109	594.090	.08	.8	.8	243	251	251	58	90	83	4
	45	1114	596.230	.05	.55	.55	225	246	249	60	90	83	4
6	50	1119	598.375	.05	.55	.55	224	253	252	62	91	84	4
E 5	55	1124	600.535	.05	.55	.55	218	249	250	62	91	85	4
1	60	1129 1129	602.622	.05	.55	.55	190	244	250	61	90	84	4
	65	1134	605.611	.08	.87	.87	214	261	255	62	89	86	4
2	70	1139	607.874	.08	.87	.87	240	250	252	61	92	86	4
	75	1144	610.710	.11	1.1	1.1	240	245	246	61	94	86	5
3	80	1149	613.520	.11	1.1	1.1	237	250	249	61	95	88	5
	85	1204	616.372	.10	1.0	1.0	239	252	250	61	96	88	5
4	90	1209	619.210	.10	1.0	1.0	238	252	251	62	98	89	5
	95	1214	622.184	.12	1.2	1.2	237	253	252	62	98	89	5
5	100	1219	625.191	.12	1.2	1.2	227	234	251	62	101	90	5
	105	1224	628.011	.10	1.0	1.0	236	247	251	61	98	90	5
6	110	1229	631.020	.10	1.0	1.0	234	247	249	61	99	90	5
	115	1234	634.011	.10	1.0	1.0	232	249	249	61	99	91	5
S 1	120	1239 1252	636.820	.06	.65	.65	232	251	250	62	94	91	4
	125	1257	639.1	.06	.65	.65	234	247	250	58	96	91	4
2	130	1302	641.342	.10	1.0	1.0	233	248	249	54	96	91	4

-.024
602.622
602.646
.001

54
01637.070
56.636.920

ΔVm= 122.494 √Δp= .3208 ΔH= ~~1.52~~ .83 Ts= 230° ✓ Tm= 91 ✓

Corrected = 122.060

LEAK Check - 4.4 + 1.0 ✓ .2788 ✓ .83 ✓ 690°R (Ts)

(Vc) Tsp 1.01 / 99.6 0.27 / .024 .111

Plant Name: WAUPACA FOUNDRY **Test Date:** 9-9-97

Run Number: M-23-1 BO-23-1 (MC) 11/21/98 **Operator:** G Gray

Traverse Point Number	Sampling Time, (min.)	Clock Time (24-hour clock)	Gas Meter Reading (V_m) ft³	Velocity Head (ΔP_s) in. H_2O	Orifice Pres. Differential (ΔH) in. H_2O Desired	Actual	Stack Temp. °F (T_s)	Probe Temp. / Filter Temp. °F	Impinger Temp. Ind °F	Out	Dry Gas Meter Temp. Inlet ($T_{m_{in}}$) °F	Outlet ($T_{m_{out}}$) °F	Pump Vacuum In. Hg	
S	135	1307	644.138	.10	1.0	1.0	233	247 / 244	56	56	98	91	5	
3	140	1312	646.940	.10	1.0	1.0	234	250 / 250	56	52	98	91	5	
	145	1317	649.997	.10	1.0	1.0	233	254 / 247	57	52	98	91	5	
4	150	1322	652.711	.11	1.1	1.1	233	253 / 250	57	53	99	91	5	
	155	1327	655.555	.11	1.1	1.1	234	247 / 250	58	53	100	91	5	
5	160	1332	659 —	.13	1.4	1.4	235	246 / 250	59	54	99	91	5	
	165	1337	662.010	.13	1.4	1.4	236	248 / 248	60	51	100	92	6	
6	170	1342	666.009	.15	1.6	1.6	233	250 / 247	60	52	101	92	6	
	175	1347	669.012	.15	1.6	1.6	230	255 / 247	60	53	101	92	6	
W 1	180	1352 1402	672.596	.04	.43	.43	211	244 / 245	65	52	94	90	2	672.930
	185	1406	674.410	.04	.43	.43	231	249 / 252	63	56	94	91	2	672.596
2	190	1411	676.3	.05	.53	.53	233	245 / 246	63	56	94	90	2	
	195	1416	677.3	.05	.53	.53	232	253 / 248	62	54	98	91	2	
3	200	1421	680.2	.06	.64	.64	233	251 / 248	62	54	95	91	3	
	205	1426	682.7	.06	.64	.64	233	247 / 248	62	54	95	91	3	
4	210	1431	685.0	.06	.64	.64	231	247 / 248	62	53	96	90	3	
	215	1436	687.376	.06	.64	.64	231	253 / 248	63	52	97	90	3	
5	220	1441	689.635	.06	.64	.64	225	244 / 249	63	54	97	91	3	
	225	1446	691.970	.06	.64	.64	217	251 / 247	63	53	97	91	3	
6	230	1451	694.289	.08	.86	.86	195	252 / 249	63	53	97	91	4	
	235	1456	696.912	.08	.86	.86	195	253 / 250	63	53	97	91	4	
	240	1501	699.545	.08	.86	.86	193	253 / 248	61	55	97	91		
		/						/						
		/						/						

METHOD 23 CDD/CDF SAMPLE RECOVERY DATA

Plant: WAUPACA FOUNDRY		Run No.: BO-23-1
Sample Date: 9/9/97	Filter No.(s): BO-23-1	Job No.: 5414.003
Sample Location: BAGHOUSE OUTLET		
Recovery Date: 9/9/97	XAD-2 Trap No.(s): BO-23-1	
Sample Recovery Person: RK/BE		

Moisture Data

Impingers	XAD - 2 Trap	1 (knockout)	2 (100 ml H2O) (untipped)	3 (100 ml H2O) (tipped)	4 (knockout) (untipped)	Silica gel (untipped)	
Final wt.	—	554.8	717.7	709.2	603.3	832.6	g
Initial wt.	—	494.0	719.5	711.5	599.2	806.9	g
Net wt.	—	60.8	-1.8	-2.3	4.1	25.7	g

Description

Train System: Method 23 TRAIN TOTAL: 86.5 g

Probe: 7' Glass

Filter: Color - Light TAN Loading - LIGHT

Impinger Contents: DI TYPE II H_2O

Silica Gel: @Grams Used - 300 Color - lt. blue % Spent - 80

Condensate Observed In Front Half: NONE

Recovered Sample Fractions

Filter Container No. 7	marked/sealed: BE
XAD Module Container No.: 8	marked/sealed: BE
Probe (FH) & Back Half Rinse (Acetone) Container No.: 9	Liquid level — marked/sealed: BE
Probe (FH) & Back Half Rinse (Toluene) Container No.: 9	Liquid level — marked/sealed: BE
Impinger Contents Container No.: 10	Liquid level marked/sealed: BE
Impinger Rinse (Acetone/~~MeCl2~~ Toluene) Container No.: 9	Liquid level marked/sealed: BE

K = 14.0

FIELD DATA SHEET

Plant: WAU PREA FOUNDRY
Sampling Location: M23 - 2 COUPLA OUTLET
Run Number: BO M23-2 / BO-23-2 CMC 1/21/98
Date: 9-10-97
Pretest Leak Rate: .001 cfm @ 15 in. Hg.
Pretest Leak Check: Pitot: ✓ Orsat: ✓

Sample Type: M23
Operator: GGM
Pbar: 29.58
Ps: -.25
CO2: 7.0
O2: 9.5
Probe Length/Type: 5' GLASS
Pitot #: 5E
Stack Diameter: 92
As: 46.16

Nozzle ID: .340
Thermocouple #: T5B
Assumed Bws: 5
Filter #: BO-23 2
Meter Box #: RMB13 Y: 1.000 ΔH@: 1.859
Post-Test Leak Rate: .004 cfm @ 15 in. Hg.
Post-Test Leak Check: Pitot: ✓ Orsat: ✓

Traverse Point Number	Sampling Time (min)	Clock Time (24-hour clock)	Gas Meter Reading (Vm) ft³	Velocity Head (Δp) in H2O	Orifice Pressure Differential (ΔH) in H2O Desired	Actual	Stack Temp. (Ts)	Temperature °F Probe	Filter	Impinger Temp. Tm °F	Cond	Dry Gas Meter Temp. Inlet (Tm in °F)	Outlet (Tm out °F)	Pump Vacuum (in. Hg)
0	0	0810	700.630											
1	5	0815	703.1	.06	.63	.63	244	246	247	55	50	68	67	2
	10	0820	705.4	.06	.63	.63	244	248	247	52	48	70	68	2
	15	0825	707.8	.05	.52	.52	244	246	245	53	48	72	69	2
2	20	0830	709.2	.05	.52	.52	250	251	250	53	48	75	70	2
	25	0835	711.4	.05	.53	.53	241	244	252	54	49	76	71	3
3	30	0840	713.6	.05	.53	.53	242	245	255	54	48	76	71	3
	35	0845	716.2	.10	1.0	1.0	243	252	248	54	48	82	74	5
4	40	0850	718.9	.10	1.0	1.0	242	252	251	53	49	84	76	5
	45	0855	721.7	.10	1.0	1.0	243	251	252	54	48	86	76	5
5	50	0900	724.7	.10	1.0	1.0	245	252	251	54	49	87	78	5
	55	0905	727.7	.11	1.1	1.1	247	252	250	54	50	89	77	5
6	60	0910	730.831	.11	1.1	1.1	242	253	251	53	51	89	79	5
1	65	954	735.8	.10	1.0	1.0	259	245	251	61	53	89	85	5
	70	959	738.5	.10	1.0	1.0	260	251	251	55	52	91	85	5
	75	1004	742.1	.17	1.8	1.8	260	250	250	55	51	92	86	6
2	80	1009	746.2	.22	2.3	2.3	264	252	249	52	51	96	86	7
	85	1014	750.6	.25	2.6	2.6	265	250	251	53	52	98	87	8
3	90	1019	755.5	.30	3.2	3.2	261	245	253	55	54	99	87	10
	95	1024	760.1	.33	3.5	3.5	259	249	253	56	55	101	89	11
4	100	1029	765.8	.30	3.2	3.2	266	252	250	56	55	103	89	11
	105	1034	770.8	.30	3.2	3.2	263	250	251	57	56	103	90	11
5	110	1039	776.0	.33	3.5	3.5	262	250	253	57	56	102	90	11
	115	1044	781.2	.33	3.5	3.5	261	251	252	57	53	104	91	11
6	120	1049	786.389	.33	3.5	3.5	267	253	252	56	52	105	92	11
		1107												

West

START

ΔVm = ~~82.779~~ 83.690 (83.596)
√Δp = .3861 ✓
ΔH = ~~1.74~~ ✓
Ts = ~~252~~ ✓
Tm = ~~84~~ ✓

LEAK CHECK
.002
730.831
732.875
2.044
✓ M 5S

.003 @ 11 in Hg
786.389
786.508
- .119
- 2.159
✓ M Total

Plant Name: WAUPACA FOUNDRY **Test Date:** 9-10-97

Run Number: BO-23-2 **Operator:** GARY GAY

786.509 →

Traverse Point Number	Sampling Time, (min.)	Clock Time (24-hour clock)	Gas Meter Reading (V_m) ft³	Velocity Head (ΔP_s) in. H_2O	Orifice Pres. Differential (ΔH) in. H_2O Desired	Actual	Stack Temp. °F (T_s)	Probe Temp. / Filter Temp. °F	Impinger Temp. T_{imp} °F	T_{conv}	Dry Gas Meter Temp. Inlet (T_{in}) °F	Outlet (T_{out}) °F	Pump Vacuum In. Hg
1	125	1108	789.9	.14	1.5	1.5	264	248 / 248	57	53	99	93	6
	130	1113	793.4	.14	1.5	1.5	264	253 / 250	54	52	102	93	6
	135	1118	797.2	.18	1.9	1.9	263	263 / 248	51	52	104	92	7
2	140	1123	801.1	.18	1.9	1.7	264	250 / 251	51	52	105	92	7
	145	1128	805.3	.22	2.3	2.3	265	249 / 246	50	51	107	95	8
3	150	1133	809.8	.22	2.3	2.3	262	248 / 251	50	52	109	96	9
	155	1138	814.2	.31	3.3	3.3	265	248 / 251	51	52	110	98	10
4	160	1143	819.4	.31	3.3	3.3	265	250 / 254	52	53	110	98	11
	165	1148	824.6	.35	3.7	3.7	264	249 / 255	52	53	111	98	11
5	170	1153	830.0	.35	3.7	3.7	266	244 / 252	54	55	111	99	11
	175	1158	835.7	.40	4.3	4.3	267	248 / 250	54	55	111	99	15
6	180	1203	841.455	.40	4.3	4.3	267	251 / 253	55	55	110	99	15
		1215						/					
1	185	1220	844.1	.08	.87	.87	263	244 / 251	61	55	104	100	4
	190	1225	846.6	.08	.87	.87	264	245 / 255	58	55	106	100	4
	195	1230	849.2	.08	.87	.87	264	249 / 250	56	54	106	100	4
2	200	1235	851.5	.08	.87	.87	264	250 / 250	56	55	107	101	4
	205	1240	853.7	.05	.54	.54	262	251 / 253	59	54	107	101	4
3	210	1245	855.8	.05	.54	.54	262	250 / 251	59	52	108	101	4
	215	1250	858.0	.06	.65	.65	261	252 / 250	60	54	104	102	4
4	220	1255	860.4	.06	.65	.65	262	251 / 252	60	52	108	102	4
	225	1300	863.0	.08	.87	.87	263	250 / 251	66	52	108	102	4
5	230	1305	865.7	.08	.87	.87	259	253 / 253	57	52	109	102	4
	235	1310	868.3	.08	.87	.87	258	250 / 249	56	52	109	102	4
6	240	1315	871.075	.08	.87	.87	259	253 / 252	55	51	109	102	

.003 @ 15.1 Hg
841.458
841.588
− .130

(168.152) 168.152 ΔV_m = ~~164.645~~ $\sqrt{\Delta P}$ = .3867 / ft/sec $\bar{\Delta H}$ = 1.77 / in $\bar{T}_s$ = 258 / °F $\bar{T}_m$ = 94 / °F

ISO's = 99% .00.8% @ 5%-40

METHOD 23 CDD/CDF SAMPLE RECOVERY DATA

Plant: MAUPACA FOUNDRY		Run No.: BO-23-2
Sample Date: 9/10/97	Filter No.(s): BO-23-2	Job No.: 5414.003
Sample Location: BAGHOUSE OUTLET		
Recovery Date: 9/10/97	XAD-2 Trap No.(s): BO-23-2	
Sample Recovery Person: RK/BE		

Moisture Data

Impingers	XAD - 2 Trap	1 (knockout)	2 (100 ml H2O) (untipped)	3 (100 ml H2O) (tipped)	4 (knockout) (untipped)	Silica gel (untipped)	
Final wt.	–	533.8	701.1	701.2	599.6	890.5	g
Initial wt.	–	475.5	703.2	703.4	596.9	854.9	g
Net wt.	<	58.3	-2.1	-2.2	2.7	35.6	g

Description

Train System: EPA Method 23 / TOTAL: 92.3g

Probe: 7' Glass

Filter: Color - lt. brown Loading - Light

Impinger Contents: Clear

Silica Gel: @Grams Used - 300 Color - lt blue % Spent - 50

Condensate Observed In Front Half: NONE

Recovered Sample Fractions

Filter Container No. 16	marked/sealed: BE
XAD Module Container No.: 17	marked/sealed: BE
Probe (FH) & Back Half Rinse (Acetone) Container No.: 18	Liquid level marked/sealed: BE
Probe (FH) & Back Half Rinse (Toluene) Container No.: 18	Liquid level marked/sealed: BE
Impinger Contents Container No.: 19	Liquid level marked/sealed: BE
Impinger Rinse (Acetone/~~MeCl2~~ Toluene) Container No.: –	Liquid level marked/sealed: –

FIELD DATA SHEET

Plant: WHUPARU FOUNDRY
Sampling Location: CUPOLA OUTLET
Run Number: B023-3 Date: 9-10-97
Pretest Leak Rate: .005 cfm @ 15 in. Hg.
Pretest Leak Check: Pitot: ✓ Orsat: ✓

Sample Type: M23 Operator: G Cay
Pbar: 29.58 Ps: .22
CO2: 9 O2: 11
Probe Length/Type: 5' Glass Pitot #: 5E
Stack Diameter: 92 As: 46.16

Nozzle ID: .34 Thermocouple #: T5B
Assumed Bws: .05 Filter #: B023-3
Meter Box #: RMB12 Y: 1.016 ΔH@: 1.959
Post-Test Leak Rate: .007 cfm @ 12 in. Hg.
Post-Test Leak Check: Pitot: ✓ Orsat: ✓

Traverse Point Number	Sampling Time (min)	Clock Time (24-hour clock)	Gas Meter Reading (Vm) ft³	Velocity Head (Δp) in H2O	Orifice Pressure Differential (ΔH) in H2O Desired	Actual	Stack Temp. (Ts)	Temperature °F Probe	Filter	Impinger Temp. °F		Dry Gas Meter Temp. Inlet (Tm in °F)	Outlet (Tm out °F)	Pump Vacuum (in. Hg)
	0	1520	871.867											
NOZT 1	5	1525	874.4	.08	.85	.85	257	251	250	69	51	91	90	4
	10	1530	877.0	.08	.85	.85	258	250	252	62	51	92	90	4
	15	1535	880.2	.14	1.5	1.5	259	260	251	58	53	93	91	4
2	20	1540	882.4	.05	.5	.5	256	252	250	53	52	96	91	4
	25	1545	884.7	.05	.5	.5	254	250	249	54	51	97	91	4
3	30	1550	886.5	.04	.43	.43	250	250	250	57	51	98	92	4
	35	1555	888.5	.04	.43	.43	247	251	252	60	52	98	92	4
4	40	1600	890.3	.03	.33	.33	245	251	252	57	51	100	93	3
	45	1605	891.9	.03	.33	.33	245	252	252	56	51	100	93	3
5	50	1610	893.8	.03	.33	.33	247	253	253	56	51	100	95	3
	55	1615	895.3	.03	.33	.33	225	244	252	55	47	100	95	3
6	60	1620	897.605	.03	.33	.33	242	253	252	56	48	101	95	3
		1626	897.057											
EN-T 1	65	1631	900.7	.13	1.4	1.4	221	245	254	55	47	102	96	3
	70	1636	903.5	.15	1.6	1.6	255	248	253	50	46	104	96	5
	75	1701	910.6	.15	1.6	1.6	254	247	252	52	46	105	97	6
2	80	1706	914.9	.21	2.3	2.3	255	250	252	52	47	105	96	7
	85	1711	918.9	.22	2.4	2.4	257	245	251	52	47	105	96	9
3	90	1716	923.7	.28	3.0	3.0	258	251	250	52	46	105	96	10
	95	1721	928.6	.25	2.7	2.7	258	252	247	52	45	106	96	10
4	100	1726	933.5	.30	3.2	3.2	259	250	250	53	46	105	96	10
	105	1731	~~937.8~~	.22	2.4	2.4	257	258	247	53	45	106	96	9
5	110	1736	938.2	.22	2.4	2.4	256	245	251	53	45	105	95	8
	115	1741	942.2	.25	2.7	2.7	256	248	251	53	46	105	96	9
6	120	1746	946.602	.25	2.7	2.7	256	248	250	53	45	105	96	9

ΔVm= 166.708 (166.708 ✓) 166.991
$\overline{\sqrt{\Delta p}}$= ~~.3229~~ 0.3841
$\overline{\Delta H}$= ~~1.46~~ 1.74
$\overline{Ts}$= ~~251~~ 254 ✓ss
$\overline{Tm}$= ~~98~~ 96.5 ✓ss

1002 @ 5.4
897.0
946.60
946.73
.13
.196
0.0521
.1341
0.097
0.283 total for leak check

Plant Name: WAU PAVE FOUNDRY **Test Date:** 9-10-97

Run Number: BO-23-3 **Operator:** G GAY

18:00 946.736

Traverse Point Number	Sampling Time, (min.)	Clock Time (24-hour clock)	Gas Meter Reading (V_m) ft³	Velocity Head (ΔP_s) in. H_2O	Orifice Pres. Differential (ΔH) in. H_2O Desired	Actual	Stack Temp. °F (T_s)	Probe Temp. / Filter Temp. °F	Impinger Temp. Exit °F	Condr	Dry Gas Meter Temp. Inlet ($T_{m_{in}}$) °F	Outlet ($T_{m_{out}}$) °F	Pump Vacuum In. Hg
Sect 1 1	125	1805	950.0	.10	1.0	1.0	252	250 / 245	54	47	97	93	5
	130	1810	952.9	.13	1.4	1.4	255	245 / 250	50	48	97	95	5
	135	1815	956.7	.13	1.4	1.4	258	247 / 249	50	47	98	93	5
2	140	1820	959.5	.15	1.6	1.6	258	244 / 250	51	48	99	93	6
	145	1825	963.7	.22	2.3	2.3	258	247 / 250	52	49	100	93	6
3	150	1830	967.8	.20	2.1	2.1	258	250 / 250	52	48	101	93	7
	155	1835	972.0	.26	2.8	2.8	257	251 / 250	53	46	102	93	7
4	160	1840	976.7	.26	2.8	2.8	256	245 / 251	53	47	102	92	9
	165	1845	981.7	.32	3.4	3.4	258	246 / 250	53	47	102	92	10
5	170	1850	986.9	.35	3.8	3.8	259	244 / 251	54	47	102	93	11
	175	1855	992.3	.35	3.8	3.8	260	244 / 250	52	46	102	92	11
6	180	19:00	997.716	.35	3.8	3.8	261	249 / 250	52	47	102	92	11
		1908						/					
Sect 2 1	185	1913	000.842	.10	1.1	1.1	258	245 / 250	57	46	95	91	5
	190	1918	003.7	.10	1.1	1.1	257	250 / 251	52	47	96	91	5
	195	1923	—	.10	1.1	1.1	257	252 / 249	52	47	97	90	5
2	200	1928	009.7	.10	1.1	1.1	259	246 / 250	51	47	98	90	5
	205	1933	013.0	.13	1.4	1.4	258	245 / 249	52	48	98	90	5
3	210	1938	016.2	.13	1.4	1.4	258	248 / 251	51	47	98	91	5
	215	1943	019.6	.15	1.6	1.6	260	249 / 250	52	47	98	90	6
4	220	1948	023.1	.15	1.6	1.6	261	250 / 250	51	48	99	90	6
	225	1953	027.0	.20	2.1	2.1	262	250 / 250	53	48	99	91	6
5	230	1958	031.0	.20	2.1	2.1	252	251 / 250	53	48	99	92	6
	235	2003	034.9	.18	1.9	1.9	258	251 / 250	52	49	99	96	7
6	240	2008	038.958	.18	1.9	1.9	257	248 250	52	48	99	97	

.005 @ 11 in Hg

997.716
997.813

METHOD 23 CDD/CDF SAMPLE RECOVERY DATA

Plant: WAUPACA FOUNDRY		Run No.: BO-23-3
Sample Date: 9/10/97	Filter No.(s): BO-23-3	Job No.: 5414.003
Sample Location: BAGHOUSE OUTLET		
Recovery Date: 9/11/97	XAD-2 Trap No.(s): BO-23-3	
Sample Recovery Person: BE/CK		

Moisture Data

	Impingers	XAD - 2 Trap	1 (knockout)	2 (100 ml H2O) (untipped)	3 (100 ml H2O) (tipped)	4 (knockout) (untipped)	Silica gel (untipped)	
NET	~~Final~~ BE wt.	–	54.3	-1.5	-2.0	1.0	32.3	g
	Initial wt.	–	495.4	729.9	725.5	601.8	866.1	g
FINAL	~~Net~~ BE wt.	–	549.7	728.4	723.5	602.8	898.4	g

Description

Train System: EPA METHOD 23 / BOX ID: N-5 / TOTAL: 84.1 g

Probe: 7' GLASS

Filter: Color - Tan Loading - Light

Impinger Contents: Type II Water

Silica Gel: @Grams Used - 300 Color - H. blue % Spent - 6%

Condensate Observed In Front Half: NONE

Recovered Sample Fractions

Filter Container No. 25	marked/sealed: BE
XAD Module Container No.: 26	marked/sealed: BE
Probe (FH) & Back Half Rinse (Acetone) Container No.: 27	Liquid level marked/sealed: BE
Probe (FH) & Back Half Rinse (Toluene) Container No.: 27	Liquid level marked/sealed: BE
Impinger Contents Container No.: 28	Liquid level marked/sealed: BE
Impinger Rinse (Acetone/~~MeCl2~~ Toluene) Container No.: —	Liquid level marked/sealed: —

FIELD DATA SHEET

Plant: Waupaca
Sampling Location: Cupola Outlet
Run Number: FB-1 Date: 9-9-97
Pretest Leak Rate: .005 cfm @ 15 in. Hg.
Pretest Leak Check: Pitot: ✓ Orsat: ✓

Sample Type: M-23 Operator: TA/GG
Pbar: 29.65 Ps: —
CO2: 3 O2: 17
Probe Length/Type: 4' Glass Pitot #: 68
Stack Diameter: 92" As: 46.2 ft²

Nozzle ID: .340 Thermocouple #:
Assumed Bws: .05 Filter #: FB-1
Meter Box #: RM 13 Y: 1.010 ΔH@: 1.859
Post-Test Leak Rate: .005 cfm @ 15 in. Hg.
Post-Test Leak Check: Pitot: ✓ Orsat: ✓

Traverse Point Number	Sampling Time (min)	Clock Time (24-hour clock)	Gas Meter Reading (Vm) ft³	Velocity Head (Δp) in H2O	Orifice Pressure Differential (ΔH) in H2O Desired	Actual	Stack Temp. (Ts)	Temperature °F Probe	Filter	Impinger Temp. °F	Dry Gas Meter Temp. Inlet (Tm in °F)	Outlet (Tm out °F)	Pump Vacuum (in. Hg)
	11.25	#1	572.873										
				.004 cfm	15 in Hg								
		#2	573.043	.005 cfm	15 in Hg								
				~~.007 cfm~~	~~15 in Hg~~								
		#3	573.205	.006 cfm	15 in Hg								

ΔVm= _____ $\overline{\sqrt{\Delta p}}$= _____ $\overline{\Delta H}$= _____ $\overline{Ts}$= _____ $\overline{Tm}$= _____

METHOD 23 CDD/CDF SAMPLE RECOVERY DATA

Plant: WAUPACA FOUNDRY		Run No.: FB-23-1
Sample Date: 9/8/97	Filter No.(s): FB-23-1	Job No.: 5414.003
Sample Location: BAGHOUSE OUTLET		
Recovery Date: 9/8/97	XAD-2 Trap No.(s): FB-23-1	
Sample Recovery Person: RK/BE		

Moisture Data

Impingers	XAD - 2 Trap	1 (knockout)	2 (100 ml H2O) (untipped)	3 (100 ml H2O) (tipped)	4 (knockout) (untipped)	Silica gel (untipped)	
Final wt.	—	475.5	703.2	703.4	596.9	854.9	g
Initial wt.	—	475.5	703.2	703.4	596.9	854.9	g
Net wt.	—	0.0	0.0	0.0	0.0	0.0	g

Description

Train System: Method 23 TRAIN / TOTAL: 0.0g

Probe: 7' GLASS

Filter: Color - White Loading - NONE

Impinger Contents: Clear

Silica Gel: @Grams Used - 300 Color - Blue % Spent - 0

Condensate Observed In Front Half: NONE

Recovered Sample Fractions

Filter Container No. 1	marked/sealed: BE
XAD Module Container No.: 2	marked/sealed: BE
Probe (FH) & Back Half Rinse (Toluene/Acetone) Container No.: 3	Liquid level marked/sealed: BE
Probe (FH) & Back Half Rinse (Toluene) Container No.: —	Liquid level marked/sealed: —
Impinger Contents Container No.: —	Liquid level marked/sealed: —
Impinger Rinse (Acetone/~~MeCl2~~ TOLUENE) Container No.: —	Liquid level marked/sealed: —

FIELD DATA SHEET

Plant: Waupaca Foundry
Sampling Location Baghouse Outlet
Run Number: M-23 Blank 2 Date: 9-11-97
Pretest Leak Rate: .003 cfm @ 15 in. Hg.
Pretest Leak Check: Pitot: — Orsat: —

Sample Type: M23 Blank Operator: TA/GG
Pbar: 29.55 Ps: —
CO2: — O2: —
Probe Length/Type: 6' Glass Pitot #: —
Stack Diameter: — As: —

Nozzle ID: .340 Thermocouple #: —
Assumed Bws: — Filter #: BO-23-Blank 2
Meter Box #: Rm B13 Y: 1.010 ΔH@: 1.859
Post-Test Leak Rate: .002 cfm @ 15 in. Hg.
Post-Test Leak Check: Pitot: — Orsat: —

Traverse Point Number	Sampling Time (min)	Clock Time (24-hour clock)	Gas Meter Reading (Vm) ft³	Velocity Head (Δp) in H2O	Orifice Pressure Differential (ΔH) in H2O		Stack Temp. (Ts)	Temperature °F		Impinger Temp. °F	Dry Gas Meter Temp.		Pump Vacuum (in. Hg)
					Desired	Actual		Probe	Filter		Inlet (Tm in °F)	Outlet (Tm out °F)	
			Leak v #1	.003	@	15 in Hg							
			Leak v #2	.002	@	15 in Hg							
			Leak v #3	.002	@	15 in Hg							

ΔVm= _____ $\overline{\sqrt{\Delta p}}$= _____ $\overline{\Delta H}$= _____ $\overline{Ts}$= _____ $\overline{Tm}$= _____

METHOD 23 CDD/CDF SAMPLE RECOVERY DATA

FB·23·2

Plant: WAUPACA Foundry		Run No.: ~~FB-2-23~~ DS
Sample Date: 9/11/97	Filter No.(s): FB2-23	Job No.: 5414.003
Sample Location: Field Blank at test site - Baghouse outlet		
Recovery Date: 9/11/97	XAD-2 Trap No.(s): FB2-23	
Sample Recovery Person: R Kalb / B. Elsass		

Moisture Data

	Impingers	XAD - 2 Trap	1 (knockout)	2 (100 ml H2O) (untipped)	3 (100 ml H2O) (tipped)	4 (knockout) (untipped)	Silica gel (untipped)	
NET	~~Final wt.~~ BF	–	0.0	-0.1	-0.1	0.0	-0.2	g
	Initial wt.	–	476.9	702.4	707.6	599.6	870.4	g
FINAL	~~Net wt.~~ BF	–	476.9	702.3	707.5	599.6	870.2	g

Description

Train System: EPA Method 23 / TOTAL: 0.0g

Probe: 7' Glass

Filter: Color - White Loading - None

Impinger Contents: Clear

Silica Gel: @Grams Used - 300 Color - Blue/White % Spent - 0

Condensate Observed In Front Half: None

Recovered Sample Fractions

Filter Container No. 34	marked/sealed: BE
XAD Module Container No.: 35	marked/sealed: BE
Probe (FH) & Back Half Rinse (Acetone) Container No.: 36	Liquid level marked/sealed: BE
Probe (FH) & Back Half Rinse (Toluene) Container No.: —	Liquid level marked/sealed: —
Impinger Contents Container No.: —	Liquid level marked/sealed: —
Impinger Rinse (Acetone/MeCl2) Container No.: —	Liquid level marked/sealed: —

FIELD DATA SHEET

K = 13.1

Plant: Waupaca Foundry
Sampling Location: Cupola Outlet
Run Number: BO-0010-1 Date: 9-9-97
Pretest Leak Rate: .008 cfm @ 15 in. Hg.
Pretest Leak Check: Pitot: ✓ Orsat: ✓

Sample Type: M-0010 Operator: TA
Pbar: 29.50 Ps: .20
CO2: 9 O2: 12
Probe Length/Type: 5' Glass Pitot #: 4C
Stack Diameter: 92" As: 46.16

Nozzle ID: .340 Thermocouple #: 4C
Assumed Bws: .06 Filter #: BO-0010-1
Meter Box #: 13 Y: .947 ΔH@: 1.81
Post-Test Leak Rate: .003 cfm @ 14 in. Hg.
Post-Test Leak Check: Pitot: ✓ Orsat: —

	Traverse Point Number	Sampling Time (min)	Clock Time (24-hour clock)	Gas Meter Reading (Vm) ft³	Velocity Head (Δp) in H2O	Orifice Pressure Differential (ΔH) in H2O Desired	Actual	Stack Temp. (Ts)	Temperature °F Probe	Filter	Impinger Temp. °F	Dry Gas Meter Temp. Inlet (Tm in °F)	Outlet (Tm out °F)	Pump Vacuum (in. Hg)	
		0	1024	649.336											
East	1	5	1034	651.7	.11	1.1	1.1	232	245	259	57	80	79	5	
		10	1039	654.6	.11	1.1	1.1	248	253	256	58	80	79	5	
	2	15	1044	658.2	.15	1.5	1.5	249	248	256	60	81	79	7	
		20	1049	661.8	.13	1.3	1.3	248	257	259	58	84	80	7	Leak check #1
	3	25	1054	665.9	.20	2.0	2.0	248	257	257	61	87	81	8	
		30	1059	669.8	.15	1.5	1.5	248	256	257	60	87	81	8	
	4	35	1104	675.7	.33	3.3	3.3	255	249	257	61	89	82	13	691.232
		40	1109	678.7	.09	0.9	0.9	247	254	257	62	91	83	5	691.395
	5	45	1114	681.6	.09	0.9	0.9	231	254	257	62	92	83	5	.002 @ 13 in Hg
		50	1119	685.3	.15	1.5	1.5	239	253	262	63	93	84	7	
	6	55	1124	688.3	.10	1.0	1.0	230	252	257	62	93	84	6	
		60	1129/1139	691.232	.09	0.9	0.9	233	254	256	61	94	85	5	-0.163
South	1	65	1134	694.4	.08	0.8	0.8	234	257	257	61	91	87	4	
		70	1139	696.5	.05	0.5	0.5	243	256	255	61	94	88	4	
	2	75	1154	699.4	.10	1.0	1.0	242	255	256	61	95	88	7	
		80	1159	702.2	.08	0.8	0.8	241	256	256	61	96	89	6	
	3	85	1204	705.3	.11	1.1	1.1	240	252	255	62	98	90	7	#2
		90	1209	708.3	.11	1.1	1.1	241	253	255	62	98	90	7	.007 @ 15
	4	95	1214	711.7	.10	1.0	1.0	240	254	254	62	99	91	7	
		100	1219	715.0	.11	1.1	1.1	238	257	255	63	99	91	7	727.750
	5	105	1224	718.0	.11	1.1	1.1	238	257	255	61	100	92	7	727.905
		110	1229	721.2	.11	1.1	1.1	234	256	255	60	100	92	7	-.155
	6	115	1234	724.4	.11	1.1	1.1	234	255	254	61	100	92	7	607
		120	1239/1253	727.750	.11	1.1	1.1	234	255	254	62	100	94	7	
West	1	125	1257	729.6	.03	0.3	0.3	234	257	259	60	96	94	3	62°F
		130	1303	731.4	.03	0.3	0.3	234	251	252	63	99	95	3	

w/ Leak Checks → ΔVm = ~~82.156~~ 123.671 ✓ $\overline{\sqrt{\Delta p}}$ = ~~.3274~~ 0.2627 $\overline{\Delta H}$ = ~~1.13~~ 0.775 $\overline{T_s}$ = ~~240~~ 234 $\overline{T_m}$ = ~~99~~ 92.8 95 SS

Plant Name: Waupaca Foundry **Test Date:** 8-9-97

Run Number: BO-0010-1 **Operator:** T. Abernathy

Leak check (initial) @ .003

Traverse Point Number	Sampling Time, (min.)	Clock Time (24-hour clock)	Gas Meter Reading (V_m) ft³	Velocity Head (ΔP_s) in. H_2O	Orifice Pres. Differential (ΔH) in. H_2O Desired	Orifice Pres. Differential (ΔH) in. H_2O Actual	Stack Temp. °F (T_s)	Probe Temp. / Filter Temp. °F	Impinger Temp. °F	Impinger Temp. °F	Dry Gas Meter Temp. Inlet ($T_{m_{in}}$) °F	Dry Gas Meter Temp. Outlet ($T_{m_{out}}$) °F	Pump Vacuum In. Hg
2	135	1304	733.2	.03	0.3	0.3	234	253 / 252	62	65	99	95	3
	140	1313	735.0	.03	0.3	0.3	235	257 / 254	65	62	101	96	3
3	145	1319	736.7	.03	0.3	0.3	235	260 / 254	62	61	101	96	3
	150	1323	738.6	.03	0.3	0.3	234	257 / 254	62	60	102	97	3
4	155	1329	740.0	.03	0.3	0.3	234	250 / 254	62	61	102	97	3
	160	1333	741.9	.03	0.3	0.3	234	251 / 254	62	61	102	97	3
5	165	1339	744.2	.06	0.6	0.6	235	250 / 254	62	60	103	97	3
	170	1343	746.7	.06	0.6	0.6	233	251 / 254	59	60	103	98	3
6	175	1349	751.404	.06	0.6	0.6	234	252 / 254	59	61	103	98	3
	180	1353	751.464	.06	0.6	0.6	234	251 / 254	59	58	104	98	3
1	185	1308	753.5	.03	0.3	0.3	229	252 / 253	60	60	100	97	3
	190	1302	755.0	.03	0.3	0.3	235	252 / 254	63	62	101	97	3
2	195	1318	756.5	.03	0.3	0.3	234	254 / 254	61	63	101	97	3
	200	1328	758.9	.03	0.3	0.3	233	254 / 254	60	63	101	97	4
3	205	1328	760.2	.03	0.3	0.3	233	258 / 255	63	63	101	98	4
	210	1333	761.9	.03	0.3	0.3	233	254 / 255	62	62	101	98	4
4	215	1338	763.6	.03	0.3	0.3	237	254 / 255	63	63	102	98	4
	220	1343	765.4	.03	0.3	0.3	232	255 / 254	63	61	102	98	4
5	225	1348	767.1	.03	0.3	0.3	222	255 / 259	62	63	102	98	4
	230	1353	769.7	.03	0.3	0.3	219	254 / 255	62	62	102	98	4
6	235	1358	770.2	.03	0.3	0.3	182	258 / 257	63	63	102	98	4
	240	1503	772.466	.03	0.3	0.3	155	257 / 255	62	61	102	96	4
			39.125	.1862		.3545	226				99.5		
			~~121.881~~ 123.671	~~.2569~~		~~0.742~~	~~233~~				~~94~~		

.141

JSO's = 102.5

Q6% 4.0

METHOD ~~23 CDD/CDF~~ 0010 SAMPLE RECOVERY DATA

Plant: WAUPACA FOUNDRY		Run No.: BO-0010-1
Sample Date: 9/9/97	Filter No.(s): BO-0010-1	Job No.: 5414.003
Sample Location: BAGHOUSE OUTLET		
Recovery Date: 9/9/97	XAD-2 Trap No.(s): BO-0010-1	
Sample Recovery Person: RK/BE		

Moisture Data

Impingers	XAD - 2 Trap	1 (knockout)	2 (100 ml H2O) (untipped)	3 (100 ml H2O) (tipped)	4 (knockout) (untipped)	Silica gel (untipped)	
Final wt.	–	530.8	743.5	723.3	622.4	916.0	g
Initial wt.	–	474.8	743.5	725.1	619.5	889.9	g
Net wt.	–	56.0	0.0	-1.8	2.9	26.1	g

Description

Train System: EPA METHOD 23 TRAIN / BOX ID: N-10 TOTAL: 83.2g ✓

Probe: 6' Glass

Filter: Color - LIGHT TAN Loading - LIGHT

Impinger Contents: DI TYPE II H_2O

Silica Gel: @Grams Used - 300 Color - lt. blue % Spent - 80

Condensate Observed In Front Half: NONE

Recovered Sample Fractions

Filter Container No. 11	marked/sealed: BE
XAD Module Container No.: 12	marked/sealed: RK
Probe (FH) & Back Half Rinse (~~Acetone~~ MeCl2/Methane) Container No.: 13	Liquid level marked/sealed: RK
Probe (FH) & Back Half Rinse (~~Toluene~~ MeCl2/Methane) Container No.: 14	Liquid level marked/sealed: BE
Impinger Contents Container No.: 15	Liquid level marked/sealed: RK
Impinger Rinse (~~Acetone~~ Methane/MeCl2) Container No.: 14	Liquid level marked/sealed: RK

K = 13.66

FIELD DATA SHEET

Plant: Waupaca Foundry
Sampling Location: Baghouse Outlet
Run Number: 80-0010-2 Date: 9-10-97
Pretest Leak Rate: .010 cfm @ 15 in. Hg.
Pretest Leak Check: Pitot: ✓ Orsat: —

Sample Type: M-0010 Operator: TA
Pbar: 29.58 Ps: .21
CO2: 7.0 O2: 9.5
Probe Length/Type: 5' Glass Pitot #: 46
Stack Diameter: 92" As: 46.16

Nozzle ID: .340 Thermocouple #: 46
Assumed Bws: .04 Filter #: 80-0010-2
Meter Box #: 13 Y: .947 ΔH@: 1.810
Post-Test Leak Rate: .009 cfm @ 15 in. Hg.
Post-Test Leak Check: Pitot: ✓ Orsat: —

Port	Traverse Point Number	Sampling Time (min)	Clock Time (24-hour clock)	Gas Meter Reading (Vm) ft³	Velocity Head (Δp) in H2O	Orifice Pressure Differential (ΔH) in H2O Desired	Actual	Stack Temp. (Ts)	Temperature °F Probe	Filter	Impinger Temp. °F		Dry Gas Meter Temp. Inlet (Tm in °F)	Outlet (Tm out °F)	Pump Vacuum (in. Hg)	Leak Check
	0	0	0810	773.250												
North	1	5	0815	775.7	.06	0.6	0.6	241	251	258	60	53	73	72	4	
		10	0820	777.6	.04	0.4	0.4	247	255	256	58	53	76	74	3	
	2	15	0825	779.5	.04	0.4	0.4	246	253	257	59	51	77	74	3	
		20	0830	781.7	.04	0.4	0.4	245	256	257	59	51	79	75	3	
	3	25	0835	783.0	.04	0.4	0.4	242	260	256	59	51	80	75	3	
		30	0840	784.9	.04	0.4	0.4	241	260	256	60	52	80	76	3	
	4	35	0845	786.6	.03	0.3	0.3	240	260	258	60	51	83	77	3	
		40	0850	788.2	.03	0.3	0.3	240	252	256	59	51	85	79	4	
	5	45	0855	790.0	.03	0.3	0.3	240	256	257	58	49	86	79	4	
		50	0900	791.7	.03	0.3	0.3	241	255	255	57	48	87	80	4	
	6	55	0905	793.7	.04	0.4	0.4	244	256	255	59	48	88	82	5	
		60	0910	795.722	.04	0.4	0.4	244	255	258	59	49	88	83	5	
East	1	65	0958	798.0	.05	0.5	0.5	248	255	258	60	50	89	88	5	
		70	1003	800.3	.05	0.5	0.5	251	255	256	59	50	92	89	5	
	2	75	1008	802.8	.07	0.7	0.7	262	256	256	59	51	93	90	6	
		80	1013	805.6	.07	0.7	0.7	264	257	255	59	50	93	90	6	
	3	85	1018	809.0	.11	1.1	1.1	265	256	256	59	50	97	91	8	
		90	1023	812.0	.11	1.1	1.1	262	256	257	59	50	98	91	8	
	4	95	1028	815.6	.15	1.5	1.5	260	255	256	59	52	100	93	9	
		100	1033	819.4	.15	1.5	1.5	260	256	256	59	52	101	93	9	
	5	105	1038	823.1	.16	1.6	1.6	262	255	256	59	52	102	94	10	
		110	1043	827.0	.16	1.6	1.6	262	256	256	55	52	103	94	10	
	6	115	1048	830.7	.14	1.4	1.4	260	255	256	54	52	103	94	9	
		120	1053	834.485	.14	1.4	1.4	261	255	256	56	52	105	96	9	
South			1108	837.6	.11	1.1	1.1	260	257	255	57	51	100	97	7	
		130	1113	840.673	.11	1.1	1.1	264	257	256	59	52	105	98	7	

ΔVm = 67.191 $\overline{\sqrt{\Delta p}}$ = .3618 $\overline{\Delta H}$ = .2846 $\overline{Ts}$ = 251 $\overline{Tm}$ = 88

Leak Check: .104 .128

Plant Name: Waupaca Foundry **Test Date:** 9-10-97

Run Number: BQ-0010-2 **Operator:** T. Abernathy

Traverse Point Number	Sampling Time, (min.)	Clock Time (24-hour clock)	Gas Meter Reading (V_m) ft³	Velocity Head (ΔP_s) in. H_2O	Orifice Pres. Differential (ΔH) in. H_2O Desired	Actual	Stack Temp. °F (T_s)	Probe Temp. / Filter Temp. °F	Impinger Temp. °F F_{Imp}		Dry Gas Meter Temp. Inlet (T_{in}) °F	Outlet (T_{out}) °F	Pump Vacuum In. Hg
2	135	1118	844.3	.15	1.5	1.5	264	255 / 256	59	52	106	99	10
	140	1123	848.0	.15	1.5	1.5	264	256 / 255	59	52	106	99	10
3	145	1128	852.9	.24	2.6	2.6	266	257 / 256	59	53	109	100	15
	150	1133	858.0	.24	2.6	2.6	266	252 / 255	58	53	111	102	15
4	155	1138	862.5	.26	2.8	2.8	266	251 / 256	58	51	110	103	15
	160	1143	867.4	.26	2.8	2.8	266	252 / 254	58	54	109	103	15
5	165	1148	872.2	.30	3.2	2.5	264	255 / 254	58	54	109	103	15
	170	1153	877.1	.30	3.2	2.5	264	252 / 254	58	52	110	104	15
6	175	1158	881.8	.28	3.0	2.5	254	257 / 255	59	52	111	104	15
	180	1203	886.695	.28	3.0	2.5	250	257 / 256	60	53	111	105	15
Rest 1	185	1215	891.0	.15	1.5	1.5	266	255 / 257	60	53	107	104	7
	190	1220	895.0	.15	1.5	1.5	266	257 / 256	57	52	111	105	8
2	195	1225	899.8	.21	2.2	2.2	266	257 / 255	58	52	113	105	13
	200	1230	904.5	.20	2.0	2.0	264	253 / 254	59	57	115	106	13
3	205	1235	909.4	.20	2.0	2.0	264	252 / 255	59	57	115	106	15
	210	1240	914.2	.20	2.0	2.0	265	255 / 256	58	56	116	107	15
4	215	1245	920.0	.27	2.9	2.9	268	257 / [illegible]	59	56	116	108	15
	220	1250	924.1	.27	2.9	2.9	268	256 / 254	60	57	116	108	15
5	225	1255	928.7	.30	3.2	2.5	267	255 / 253	60	57	116	109	15
	230	1303	933.4	.30	3.2	2.5	267	254 / 255	61	56	116	109	10
6	235	1310	940.0	.40	4.3	2.5	266	254 / 256	61	56	116	109	15
	240	1315	942.980	.35	3.8	2.5	266	254 / 254	60	56	116	109	15

.012 @ 15 in Hg
882.695
886.882
− .187

419 Adj.

98.48

ΔV_m = ~~165.684~~ 169.311 $\overline{\sqrt{\Delta P}}$ = ~~.2688~~ .3607 $\overline{\Delta H}$ = ~~1.69~~ 1.71 / 40 T_s = ~~265~~ 268 $\overline{T_m}$ = ~~100~~ 96 / $ISO'S$ = 9

METHOD ~~23 CDD/CDF~~ 0010 SAMPLE RECOVERY DATA

Plant: WALDACA FOUNDRY		Run No.: BO-0010-2
Sample Date: 9/10/97	Filter No.(s): BO-0010-2	Job No.: 5414.003
Sample Location: BAGHOUSE OUTLET		
Recovery Date: 9/10/97	XAD-2 Trap No.(s): BO-0010-2	
Sample Recovery Person: RK/BE		

Moisture Data

Impingers	XAD - 2 Trap	1 (knockout)	2 (100 ml H2O) (untipped)	3 (100 ml H2O) (tipped)	4 (knockout) (untipped)	Silica gel (untipped)	
Final wt.	–	554.5	715.0	730.8	620.0	878.7	g
Initial wt.	–	495.4	715.7	732.7	617.1	849.2	g
Net wt.	–	59.1	-0.7	-1.9	2.9	29.5	g

Description

Train System: MM5 TRAIN / BOX ID: N-10 / TOTAL: 88.9 g ✓

Probe: 6' GLASS

Filter: Color - Lt. Brown Loading - Light

Impinger Contents: Clear

Silica Gel: @Grams Used - 300 Color - lt. blue % Spent - 50

Condensate Observed In Front Half: NONE

Recovered Sample Fractions

Filter Container No. 20	marked/sealed: BE
XAD Module Container No.: 21	marked/sealed: BE
Probe (FH) & Back Half Rinse (~~Acetone~~ MeCl2/Methane) Container No.: 22	Liquid level – marked/sealed: BE
Probe (FH) & Back Half Rinse (~~Toluene~~ MeCl2/Methane) Container No.: 23	Liquid level – marked/sealed: BE
Impinger Contents Container No.: 24	Liquid level – marked/sealed: BE
Impinger Rinse (~~Acetone~~ Methane/MeCl2) Container No.: 23	Liquid level – marked/sealed: BE

FIELD DATA SHEET

Plant: Waupaca Foundry
Sampling Location: Baghouse Outlet
Run Number: BO-0010-3 Date: 9-10-97
Pretest Leak Rate: .004 cfm @ 15 in. Hg.
Pretest Leak Check: Pitot: ✓ Orsat: —

Sample Type: M-0010 Operator: TA
Pbar: 29.58 Ps: .22
CO2: 9 O2: 11
Probe Length/Type: 5' Glass Pitot #: 46
Stack Diameter: 92" As: 46.16

Nozzle ID: .34 Thermocouple #: 46
Assumed Bws: .04 Filter #: BO-0010-2
Meter Box #: 13 Y: .947 ΔH@: 1.87
Post-Test Leak Rate: .003 cfm @ 11 in. Hg.
Post-Test Leak Check: Pitot: ✓ Orsat: —

Traverse Point Number	Sampling Time (min)	Clock Time (24-hour clock)	Gas Meter Reading (Vm) ft³	Velocity Head (Δp) in H2O	Orifice Pressure Differential (ΔH) in H2O Desired	Actual	Stack Temp. (Ts)	Temperature °F Probe	Filter	Impinger Temp. °F		Dry Gas Meter Temp. Inlet (Tm in °F)	Outlet (Tm out °F)	Pump Vacuum (in. Hg)
0	0	1520	943.528											
1	5	1525	947.8	.16	1.6	1.6	261	252	251	60	57	96	95	7
	10	1530	951.8	.16	1.6	1.6	262	251	252	61	57	97	95	7
2	15	1535	956.9	.27	2.8	2.8	261	251	252	60	57	98	96	10
	20	1540	960.7	.13	1.3	1.3	262	251	251	60	53	99	97	7
3	25	1545	965.2	.15	1.5	1.5	262	251	254	60	53	102	97	7
	30	1550	968.3	.15	1.5	1.5	262	252	254	60	53	103	97	7
4	35	1555	972.7	.19	2.0	2.0	256	251	254	59	53	104	97	8
	40	1600	977.0	.19	2.0	2.0	257	252	254	59	53	105	98	8
5	45	1605	981.4	.19	2.0	2.0	254	253	261	60	53	106	98	8
	50	1629	985.9	.21	2.3	2.3	252	257	261	60	52	103	98	8
6	55	1624	990.6	.21	2.3	2.3	253	253	261	55	52	105	98	8
	60	1639/1640	995.105	.19	2.0	2.0	244	254	262	52	52	107	99	8
1	65	1651	998.0	.11	1.2	1.2	236	252	262	60	52	102	98	5
	70	1656	1000.6	.11	1.2	1.2	257	255	261	53	52	105	99	5
2	75	1701	1004.6	.13	1.4	1.4	250	255	259	52	53	106	100	7
	80	1706	1009.0	.13	1.4	1.4	257	255	255	52	55	107	100	8
3	85	1711	1013.2	.19	2.0	2.0	259	256	252	52	55	108	100	10
	90	1716	1017.6	.19	2.0	2.0	258	252	255	53	55	108	100	8
4	95	1721	1021.7	.17	1.8	1.8	260	255	257	53	56	109	100	8
	100	1726	1026.4	.24	2.6	2.6	260	256	256	52	48	107	100	10
5	105	1731	1031.8	.30	3.2	3.2	260	256	256	52	48	107	100	10
	110	1736	1037.3	.30	3.2	3.2	260	255	256	52	49	107	100	10
6	115	1741	1042.4	.25	2.7	2.7	249	254	255	52	49	105	100	10
	120	1746/1746	1047.843	.30	3.2	3.2	251	254	255	53	46	105	99	10
1	125	1805	1050.8	.08	0.9	0.9	259	252	260	53	47	97	96	4
	130	1810	1053.5	.08	0.9	0.9	257	252	260	55	48	99	96	5

Best

Top

.02

.219 wt

South

West

186.455 ΔVm= ~~109.472~~ ~~109.130~~ $\overline{\sqrt{\Delta p}}$= ~~0.4224~~ 0.3862 ΔH= ~~1.95~~ 1.66 Ts= 256 Tm= ~~101~~ 99

.003 ω 10 in Hg

98.105
995.252
-.127

.003 ω 10 in Hg

1047.843
1047.952
-.109

Plant Name: Waupaca Foundry **Test Date:** 9-10-97

Run Number: BO-0010-3 **Operator:** T. Abernathy

Traverse Point Number	Sampling Time, (min.)	Clock Time (24-hour clock)	Gas Meter Reading (V_m) ft³	Velocity Head (ΔP_s) in. H_2O	Orifice Pres. Differential (ΔH) in. H_2O Desired	Actual	Stack Temp. °F (T_s)	Probe Temp. / Filter Temp. °F	Impinger Temp. °F		Dry Gas Meter Temp. Inlet ($T_{m_{in}}$) °F	Outlet ($T_{m_{out}}$) °F	Pump Vacuum In. Hg
2	135	1815	1056.5	.08	0.9	0.9	252	251 / 253	57	50	97	96	5
	140	1820	1059.8	.09	1.0	1.0	258	251 / 253	55	53	100	96	5
3	145	1825	1063.1	.12	1.3	1.3	258	252 / 257	55	53	100	96	6
	150	1830	1066.5	.12	1.3	1.3	258	252 / 257	56	53	101	96	6
4	155	1835	1070.7	.18	1.9	1.9	258	253 / 257	56	53	101	96	8
	160	1840	1074.9	.18	1.9	1.9	257	252 / 258	56	53	102	96	8
5	165	1845	1079.5	.20	2.1	2.1	258	252 / 257	56	53	102	96	9
	170	1850	1083.6	.20	2.1	2.1	258	252 / 257	57	54	102	96	9
6	175	1855	1088.2	.22	2.4	2.4	260	253 / 258	57	54	102	96	9
	180	1900/1008	1092.977	.22	2.4	2.4	260	253 / 257	57	54	102	96	9
orth 1	185	1903	1095.8	.09	1.0	1.0	256	254 / 256	56	53	101	94	5
	190	1918	1099.1	.09	1.0	1.0	258	254 / 256	56	53	99	95	5
2	195	1923	1102.1	.09	1.0	1.0	258	253 / 258	58	47	99	95	5
	200	1928	1105.3	.09	1.0	1.0	259	253 / 258	58	47	99	95	5
3	205	1933	1108.5	.09	1.0	1.0	258	253 / 258	60	48	101	95	5
	210	1938	1111.6	.09	1.0	1.0	256	252 / 254	59	48	100	94	5
4	215	1943	1114.7	.09	1.0	1.0	256	253 / 254	59	47	100	94	5
	220	1948	1117.9	.09	1.0	1.0	256	253 / 253	59	47	99	94	5
5	225	1953	1121.0	.09	1.0	1.0	256	252 / 252	60	48	99	94	5
	230	1958	1124.1	.09	1.0	1.0	259	258 / 256	60	49	99	94	5
6	235	2003	1127.2	.09	1.0	1.0	259	257 / 256	60	48	99	94	5
	240	2008	1130.345	.09	1.0	1.0	557	256 / 257	61	49	99	93	5

.003 @ 10 in Hg

1092.977
1092.103
.126

METHOD ~~23 CDD/CDF~~ 0010 SAMPLE RECOVERY DATA

Plant: WAUPACA FOUNDRY		Run No.: BO-0010-3
Sample Date: 9/10/97	Filter No.(s): BO-0010-3	Job No.: 5414.003
Sample Location: BAGHOUSE OUTLET		
Recovery Date: 9/11/97	XAD-2 Trap No.(s): BO-0010-3	
Sample Recovery Person: BE/AK		

Moisture Data

Impingers	XAD - 2 Trap	1 (knockout)	2 (100 ml H2O) (untipped)	3 (100 ml H2O) (tipped)	4 (knockout) (untipped)	Silica gel (untipped)	
Final wt.	-	538.0	744.0	722.9	624.7	930.5	g
Initial wt.	-	475.0	748.4	723.7	~~624.6~~ 622.6	896.0	g
Net wt.	-	63.0	-4.4	-0.8	2.1	34.5	g

Description

Train System: EPA METHOD 0010 / TRAIN ID: N-10 / TOTAL: 94.4 g

Probe: 6' GLASS

Filter: Color - lt brown Loading - light

Impinger Contents: Clear

Silica Gel: @Grams Used - 300 Color - lt. blue % Spent - 60

Condensate Observed In Front Half: NONE

Recovered Sample Fractions

Filter Container No. 29	marked/sealed BE
XAD Module Container No.: 30	marked/sealed: BE
Probe (FH) & Back Half Rinse (~~Acetone~~ MeCl2/Methane) Container No.: 31	Liquid level marked/sealed BE
Probe (FH) & Back Half Rinse (~~Toluene~~ MeCl2/Methane) Container No.: 32	Liquid level marked/sealed BE
Impinger Contents Container No.: 33	Liquid level marked/sealed: BE
Impinger Rinse (~~Acetone~~ Methane/MeCl2) Container No.: 32	Liquid level marked/sealed BE

FIELD DATA SHEET

Plant: Wauprice Foundry
Sampling Location: Cupola outlet
Run Number: FB-1 Date: 9-8-97
Pretest Leak Rate: .012 cfm @ 15 in. Hg.
Pretest Leak Check: Pitot: ✓ Orsat: —

Sample Type: M-0010 Operator: TA/CG
Pbar: 29.55 Ps: NA
CO2: 3 O2: 17
Probe Length/Type: 5' Glass Pitot #: 56
Stack Diameter: 92" As: 46.2 ft²

Nozzle ID: .340 Thermocouple #: ____
Assumed Bws: .05 Filter #: FB-1
Meter Box #: 13 Y: .947 ΔH@: 1.810
Post-Test Leak Rate: .012 cfm @ 15 in. Hg.
Post-Test Leak Check: Pitot: ____ Orsat: ____

Traverse Point Number	Sampling Time (min)	Clock Time (24-hour clock)	Gas Meter Reading (Vm) ft³	Velocity Head (Δp) in H2O	Orifice Pressure Differential (ΔH) in H2O		Stack Temp. (Ts)	Temperature °F		Impinger Temp. °F	Dry Gas Meter Temp.		Pump Vacuum (in. Hg)
					Desired	Actual		Probe	Filter		Inlet (Tm in °F)	Outlet (Tm out °F)	
	1415	Leak Chk	630.880										
		#1		Rate	.010	15 in Hg							
		Leak	631.103	Rate	.012	15 in Hg							
		Check											
		#2											
		#3	631.289	Rate	.015	15 in Hg							

ΔVm= ____ $\overline{\sqrt{\Delta p}}$= ____ $\overline{\Delta H}$= ____ $\overline{Ts}$= ____ $\overline{Tm}$= ____

METHOD ~~23 CDD/CDF~~ 0010 SAMPLE RECOVERY DATA

Plant: WALIPACA FOUNDRY		Run No.: FB-0010-1
Sample Date: 9/8/97	Filter No.(s): FB-0010-1	Job No.: 5414.003
Sample Location: BAGHOUSE OUTLET		
Recovery Date: 9/8/97	XAD-2 Trap No.(s): FB-0010-1	
Sample Recovery Person: RK/BE		

Moisture Data

Impingers	XAD - 2 Trap	1 (knockout)	2 (100 ml H2O) (untipped)	3 (100 ml H2O) (tipped)	4 (knockout) (untipped)	Silica gel (untipped)	
Final wt.	—	474.8	743.5	725.1	619.5	889.9	g
Initial wt.	—	474.8	743.5	725.1	619.5	889.9	g
Net wt.	—	0.0	0.0	0.0	0.0	0.0	g

Description

Train System: MM5 TRAIN / M0010 / BOX ID: N-10 / TOTAL: 0.0g

Probe: 6' Glass

Filter: Color - Clear/White Loading - None

Impinger Contents: Clear

Silica Gel: @Grams Used - 300 Color - Blue % Spent - 0.0

Condensate Observed In Front Half: NONE

Recovered Sample Fractions

Filter Container No. 4	marked/sealed: RK
XAD Module Container No.: 5	marked/sealed: RK
Probe (FH) & Back Half Rinse (~~Acetone~~ MeCl2/Methanol) Container No.: 6	Liquid level — marked/sealed: RK
Probe (FH) & Back Half Rinse (~~Toluene~~ MeCl2/Methanol) Container No.: —	Liquid level marked/sealed: —
Impinger Contents Container No.: —	Liquid level marked/sealed: —
Impinger Rinse (~~Acetone~~ Methanol/MeCl2) Container No.: —	Liquid level marked/sealed: —

Pacific Environmental Services, Inc.

Dry Molecular Weight Determination

Client/Project: WAVPACA - 5414.003
Date/Time: 9/9/97
Sample Type: Orsat Bag
Ambient Temp. °F: 70

Orsat No.: O-2
Operator: R Kolch
Comments:
Site Location: Baghouse Outlet

Run No.(s)	Gas	Run 1		Run 2		Run 3		Average Net Volume %	Multiplier	Molecular Weight of Stack Gas, Md (lb/Mole)
		Actual	Net	Actual	Net	Actual	Net			
O-1A	CO_2	5.3	~~7.0~~ 7.0	7.0	7.0	7.0	7.0	7.0	0.44	3.08
	O_2[a]	19.4	~~20.8~~ 20.8	20.8	13.8	20.8	13.8	13.8	0.32	4.42
	CO[b]			-	-	-	-	-	0.28	
	N_2[c]			100.0	79.2	100	79.2	79.2	0.28	22.18
									Md =	29.68

Average ewh
8.79
CO_2 = ~~8.80~~
12.74
O_2 = ~~12.73~~

Run No.(s)	Gas	Run 1		Run 2		Run 3		Average Net Volume %	Multiplier	Molecular Weight of Stack Gas, Md (lb/Mole)
		Actual	Net	Actual	Net	Actual	Net			
O-1B	CO_2	9.6	9.6	9.6	9.6			9.6	0.44	4.22
	O_2[a]	21.8	12.2	21.8	12.2			12.2	0.32	3.90
	CO[b]	-	-	-	-			-	0.28	
	N_2[c]	100	78.2	100.0	78.2			78.2	0.28	21.90
									Md =	30.02

Run No.(s)	Gas	Run 1		Run 2		Run 3		Average Net Volume %	Multiplier	Molecular Weight of Stack Gas, Md (lb/Mole)
		Actual	Net	Actual	Net	Actual	Net			
O-1C	CO_2	9.4	9.4	9.2	9.2			9.3	0.44	4.09
	O_2[a]	22.0	12.6	21.8	12.6			~~21.4~~ 12.6	0.32	~~7.01~~ 4.03
	CO[b]								0.28	
	N_2[c]	100.0	78.0	100.0	78.2			78.1	0.28	21.87
									Md =	~~32.~~ 29.99

[a] O_2 Net Volume is O_2 actual reading minus CO_2 actual reading.

[b] CO Net Volume is CO actual reading minus O_2 actual reading.

[c] N_2 Net Volume is 100 minus CO actual reading.

PACIFIC ENVIRONMENTAL SERVICES, INC.

Pacific Environmental Services, Inc.

Dry Molecular Weight Determination

Client/Project: WAUPACA-SHM.003
Date/Time: 9/9/97
Sample Type: Orsat Bag
Ambient Temp. °F: 70

Orsat No.: O-2
Operator: R Kirk
Comments:
Site Location: Baghouse Outlet

Run No.(s)	Gas	Run 1		Run 2		Run 3		Average Net Volume %	Multiplier	Molecular Weight of Stack Gas, Md (lb/Mole)
		Actual	Net	Actual	Net	Actual	Net			
O-1D	CO_2	9.2	9.2	9.3	9.3			9.25	0.44	4.09
	O_2[a]	21.6	12.4	21.6	12.3			12.35	0.32	3.93
	CO[b]	—	—	—	—			—	0.28	
	N_2[c]	100.0	78.4	100.0	78.4			78.4	0.28	21.95
									Md =	29.97

Run No.(s)	Gas	Run 1		Run 2		Run 3		Average Net Volume %	Multiplier	Molecular Weight of Stack Gas, Md (lb/Mole)
		Actual	Net	Actual	Net	Actual	Net			
	CO_2								0.44	
	O_2[a]								0.32	
	CO[b]								0.28	
	N_2[c]								0.28	
									Md =	

Run No.(s)	Gas	Run 1		Run 2		Run 3		Average Net Volume %	Multiplier	Molecular Weight of Stack Gas, Md (lb/Mole)
		Actual	Net	Actual	Net	Actual	Net			
	CO_2								0.44	
	O_2[a]	—							0.32	
	CO[b]								0.28	
	N_2[c]								0.28	
									Md =	

[a] O_2 Net Volume is O_2 actual reading minus CO_2 actual reading.

[b] CO Net Volume is CO actual reading minus O_2 actual reading.

[c] N_2 Net Volume is 100 minus CO actual reading.

PACIFIC ENVIRONMENTAL SERVICES, INC.

Pacific Environmental Services, Inc.

Dry Molecular Weight Determination

Client/Project: WAVPACA/541400
Date/Time: 9/10/97
Sample Type: Orsat bag
Ambient Temp. °F: 70

Orsat No.: O-2
Operator: R Wilde
Comments:
Site Location: Baghouse Outlet

Run No.(s)	Gas	Run 1		Run 2		Run 3		Average Net Volume %	Multiplier	Molecular Weight of Stack Gas, Md (lb/Mole)
		Actual	Net	Actual	Net	Actual	Net			
O-2A	CO_2	9.6	9.6	9.6	9.6			9.6	0.44	
	O_2[a]	21.0	11.4	21.2	11.6			11.5	0.32	
	CO[b]								0.28	
	N_2[c]	100.0	79.0	100.0	78.8			78.9	0.28	
									Md =	

Average
CO_2 = 10.13
O_2 = 11.0

Run No.(s)	Gas	Run 1		Run 2		Run 3		Average Net Volume %	Multiplier	Molecular Weight of Stack Gas, Md (lb/Mole)
		Actual	Net	Actual	Net	Actual	Net			
O-2B	CO_2	10.2	10.2	10.4	10.4			10.3	0.44	
	O_2[a]	21.2	11.0	21.2	10.8			10.9	0.32	
	CO[b]								0.28	
	N_2[c]	100.0	78.8	100.0	78.8			78.8	0.28	
									Md =	

Run No.(s)	Gas	Run 1		Run 2		Run 3		Average Net Volume %	Multiplier	Molecular Weight of Stack Gas, Md (lb/Mole)
		Actual	Net	Actual	Net	Actual	Net			
O-2C	CO_2	10.2	10.2	10.2	10.2			10.2	0.44	4.49
	O_2[a]	21.0	10.8	21.2	11.0			10.9	0.32	3.49
	CO[b]								0.28	
	N_2[c]	100.0	79.0	100.0	78.8			78.9	0.28	22.09
									Md =	30.07

✓ BR

[a] O_2 Net Volume is O_2 actual reading minus CO_2 actual reading.

[b] CO Net Volume is CO actual reading minus O_2 actual reading.

[c] N_2 Net Volume is 100 minus CO actual reading.

PACIFIC ENVIRONMENTAL SERVICES, INC.

Pacific Environmental Services, Inc.

Dry Molecular Weight Determination

Client/Project: WAUPACA-S414.003
Date/Time: 9/10/97
Sample Type: Orsat Bag
Ambient Temp. °F: 70

Orsat No.: 0-2
Operator: R Kolde
Comments:
Site Location: Baghouse Outlet

Run No.(s)	Gas	Run 1		Run 2		Run 3		Average Net Volume %	Multiplier	Molecular Weight of Stack Gas, Md (lb/Mole)
		Actual	Net	Actual	Net	Actual	Net			
0-2D	CO_2	10.4	10.4	10.4	10.4			10.4	0.44	4.58
	O_2[a]	21.0	10.6	21.2	10.8			10.7	0.32	3.42
	CO[b]								0.28	
	N_2[c]	100.0	79.0	100.0	78.8			78.9	0.28	22.09
									Md =	30.09

Run No.(s)	Gas	Run 1		Run 2		Run 3		Average Net Volume %	Multiplier	Molecular Weight of Stack Gas, Md (lb/Mole)
		Actual	Net	Actual	Net	Actual	Net			
0-3A	CO_2	10.6	10.6	10.6	10.6			10.6	0.44	4.66
	O_2[a]	21.0	10.4	21.0	10.4			10.4	0.32	3.33
	CO[b]								0.28	
	N_2[c]	100.0	79.0	100.0	79.0			79.0	0.28	22.12
									Md =	30.11

Average Run 3
CO_2 = 9.98
O_2 = ~~4.28~~ 11.03

Run No.(s)	Gas	Run 1		Run 2		Run 3		Average Net Volume %	Multiplier	Molecular Weight of Stack Gas, Md (lb/Mole)
		Actual	Net	Actual	Net	Actual	Net			
0-3B	CO_2	7.2	7.2	7.4	7.4			7.3	0.44	3.21
	O_2[a]	20.8	13.6	20.8	13.4			13.5	0.32	4.32
	CO[b]								0.28	
	N_2[c]	100.0	79.2	100.0	79.2			79.2	0.28	22.18
									Md =	29.71

[a] O_2 Net Volume is O_2 actual reading minus CO_2 actual reading.

[b] CO Net Volume is CO actual reading minus O_2 actual reading.

[c] N_2 Net Volume is 100 minus CO actual reading.

PACIFIC ENVIRONMENTAL SERVICES, INC.

Pacific Environmental Services, Inc.

Dry Molecular Weight Determination

Client/Project:	WAUPACA - 5414.003	Orsat No.	O-2
Date/Time:	9/10/97	Operator:	R Kalela
Sample Type:	Orsat Bag	Comments:	
Ambient Temp. °F	70	Site Location:	Baghouse Outlet

Run No.(s)	Gas	Run 1		Run 2		Run 3		Average Net Volume %	Multiplier	Molecular Weight of Stack Gas, Md (lb/Mole)
		Actual	Net	Actual	Net	Actual	Net			
O-3C	CO_2	11.0	11.0	11.0	11.0			11.0	0.44	4.84
	O_2[a]	21.0	10.0	21.0	10.0			10.0	0.32	3.20
	CO[b]								0.28	
	N_2[c]	100.0	79.0	100.0	79.0			79.0	0.28	22.12
									Md =	30.16

Run No.(s)	Gas	Run 1		Run 2		Run 3		Average Net Volume %	Multiplier	Molecular Weight of Stack Gas, Md (lb/Mole)
		Actual	Net	Actual	Net	Actual	Net			
O-3D	CO_2	11.0	11.0	11.0	11.0			11.0	0.44	
	O_2[a]	21.2	~~11.2~~	21.2	~~11.2~~			~~11.2~~	0.32	
	CO[b]								0.28	
	N_2[c]	100.0	78.8	100.0	78.8			78.8	0.28	
									Md =	

10.2 CMC 1/21/98 10.2

Run No.(s)	Gas	Run 1		Run 2		Run 3		Average Net Volume %	Multiplier	Molecular Weight of Stack Gas, Md (lb/Mole)
		Actual	Net	Actual	Net	Actual	Net			
	CO_2								0.44	
	O_2[a]								0.32	
	CO[b]								0.28	
	N_2[c]								0.28	
									Md =	

[a] O_2 Net Volume is O_2 actual reading minus CO_2 actual reading.

[b] CO Net Volume is CO actual reading minus O_2 actual reading.

[c] N_2 Net Volume is 100 minus CO actual reading.

PACIFIC ENVIRONMENTAL SERVICES, INC.

APPENDIX B

ANALYTICAL DATA - PARTICULATE MATTER/METALS

Appendix B.1

Analytical Data - Particulate Matter

PES

SAMPLE ANALYTICAL DATA FORM

Plant WAUPACA - TELL CITY Run number I-M29-1

Sample location CUPOLA BAGHOUSE INLET

Relative humidity

Density of acetone (ρ_a) 0.7852 g/ml

Sample type	Sample identifiable	Liquid level marked and/or container sealed
Acetone rinse filter(s)	✓	✓

Acetone rinse container number Beaker W-1

Acetone rinse volume (V_{aw}) 500 ml

Acetone blank residue concentration (C_a) 0.0 mg/g

$W_a = C_a V_{aw} \rho_a$ = (0.0) (500) (.7852) = mg

Date and time of wt 9/22/97 1600 Gross wt 111757.3 mg

Date and time of wt 9/23/97 0740 Gross wt 111757.8 mg

Average gross wt 111757.6 mg

Tare wt 109620.4 mg

Less acetone blank wt (W_a) 0.0 mg

Weight of particulate in acetone rinse (m_a) 2137.2 mg

Filter(s) container number 4" I-M29-1 1014

Date and time of wt 9/17/97 ~~1335~~ 1015 Gross wt 1791.0 mg

Date and time of wt 9/17/97 ~~1015~~ 1630 Gross wt 1791.1 mg

Average gross wt 1791.1 mg

Tare wt 614.82 conc mg

Weight of particulate on filter(s) (m_f) 1176.89 conc mg

Weight of particulate in acetone rinse 2137.2 mg

Total weight of particulate (m_n) 3314.01 conc mg

Note: In no case should a blank residue >0.01 mg/g or 0.001% of the weight of acetone used be subtracted from the sample weight.

Remarks

Signature of analyst [signature]

Signature of reviewer

PES

SAMPLE ANALYTICAL DATA FORM

Plant WAUPACA - TELL CITY Run number I-M29-2

Sample location CUPOLA BAGHOUSE INLET

Relative humidity

Density of acetone (ρ_a) 0.7852 g/ml

Sample type	Sample identifiable	Liquid level marked and/or container sealed
Acetone rinse filter(s)	✓	✓

Acetone rinse container number Beaker W-2

Acetone rinse volume (V_{aw}) 500 ml

Acetone blank residue concentration (C_a) 0.0 mg/g

$W_a = C_a V_{aw} \rho_a$ = (0.0) (500) (.7852) = 0.0 mg

Date and time of wt 9/22/97 1608 Gross wt 108731.4 mg

Date and time of wt 9/23/97 0740 Gross wt 108729.2 mg

Average gross wt 108730.3 mg

Tare wt 102547.3 mg

Less acetone blank wt (W_a) 0.0 mg

Weight of particulate in acetone rinse (m_a) 6183.0 mg

Filter(s) container number 4" I-M29-2 1019

Date and time of wt 9/16/97 1335 Gross wt 5222.7 mg

Date and time of wt 9/17/97 1015 Gross wt 5222.9 mg

Average gross wt 5222.8 mg

Tare wt 616.~~3~~4 cmc mg

Weight of particulate on filter(s) (m_f) 4606.~~3~~4 cmc mg

Weight of particulate in acetone rinse 6183.0 mg

Total weight of particulate (m_n) 10789.~~3~~4 cmc mg

Note: In no case should a blank residue >0.01 mg/g or 0.001% of the weight of acetone used be subtracted from the sample weight.

Remarks

Signature of analyst Franklin T. Jordan

Signature of reviewer

PES

SAMPLE ANALYTICAL DATA FORM

Plant WAUPACA - TELL CITY Run number I-M29-3

Sample location CUPOLA BAGHOUSE INLET

Relative humidity

Density of acetone (ρ_a) 0.7852 g/ml

Sample type	Sample identifiable	Liquid level marked and/or container sealed
Acetone rinse filter(s)	✓	✓

Acetone rinse container number Beaker W-3

Acetone rinse volume (V_{aw}) 500 ml

Acetone blank residue concentration (C_a) 0.0 mg/g

$W_a = C_a V_{aw} \rho_a$ = (0.0) (500) (.7852) = 0.0 mg

Date and time of wt 9/22/97 1600 Gross wt 108102.2 mg

Date and time of wt 9/23/97 0740 Gross wt 108102.6 mg

Average gross wt 108102.4 mg

Tare wt 102618.7 mg

Less acetone blank wt (W_a) 0.0 mg

Weight of particulate in acetone rinse (m_a) 5483.7 mg

Filter(s) container number 4" I-M29-3 1011

Date and time of wt 9/17/97 1630 Gross wt 3339.2 mg

Date and time of wt ~~9/18/97~~ 9/17/97 ~~0915~~ 1015 Gross wt ~~3338.8~~ 3341.5 mg CMC

CMC CMC

Average gross wt 3340.4 mg

Tare wt 609.9 8 CMC mg

Weight of particulate on filter(s) (m_f) 2730.8 6 CMC mg

Weight of particulate in acetone rinse 5483.7 mg

Total weight of particulate (m_n) 8214.7 3 CMC mg

Note: In no case should a blank residue >0.01 mg/g or 0.001% of the weight of acetone used be subtracted from the sample weight.

Remarks

Signature of analyst [signature] 9/18/97

Signature of reviewer

FIELD BLANK ANALYTICAL DATA FORM

Plant WAUPACA - TELL CITY

Sample location CUPOLA BAGHOUSE INLET

Relative humidity

Liquid level marked and container sealed W-4

Density of acetone (ρ_a) 0.7852 g/ml

Blank volume (V_a) 125 ml

Date and time of wt ~~9-17-97~~ ~~1605~~ Gross wt ~~98327.~~ 98340.9 mg

Date and time of wt ~~9-18-97~~ ~~1610~~ Gross wt 98340.4 mg

Average gross wt 98340.7 mg

Tare wt 98327.0 mg

Weight of blank (m_{ab}) 13.7 mg

$$C_a = \frac{m_{ab}}{V_a \rho_a} = \frac{(13.7)}{(125)(.7852)} = 0.14 \text{ mg/g}$$

Note: In no case should a blank residue greater than 0.01 mg/g (or 0.001% of the blank weight) be subtracted from the sample weight.

Filters 4" Filter number 1015

Date and time of wt 9/16/97 1335 Gross wt 612.4 mg

Date and time of wt 9/17/97 1015 Gross wt 612.4 mg

Average gross wt 612.4 mg

Tare wt 611.65 cmc mg

Difference wt 0.89 cmc mg

Note: Average difference must be less than ±5 mg or 2% of total sample weight whichever is greater.

Remarks

Signature of analyst [signature]

Signature of reviewer

REAGENT BLANK ANALYTICAL DATA FORM

Plant WAUPACA - TELL CITY

Sample location CUPOLA BAGHOUSE INLET

Relative humidity _____

Liquid level marked and container sealed _____

Density of acetone (ρ_a) _____ g/ml

Blank volume (V_a) _____ ml

Date and time of wt _____ Gross wt _____ mg

Date and time of wt _____ Gross wt _____ mg

Average gross wt _____ mg

Tare wt _____ mg

Weight of blank (m_{ab}) _____ mg

$$C_a = \frac{m_{ab}}{V_a \rho_a} = \frac{(\quad)}{(\quad)(\quad)} = _____ \text{ mg/g}$$

Note: In no case should a blank residue greater than 0.01 mg/g (or 0.001% of the blank weight) be subtracted from the sample weight.

Filters 4" Filter number 1020

Date and time of wt 9/16/97 1335 Gross wt 619.6 mg

Date and time of wt 9/17/97 1015 Gross wt 619.7 mg

Average gross wt 619.7 mg

Tare wt 619.8 mg

Difference wt -0.1 mg

Note: Average difference must be less than ±5 mg or 2% of total sample weight whichever is greater.

Remarks _____

Signature of analyst [signature]

Signature of reviewer _____

SAMPLE ANALYTICAL DATA FORM

Plant WAUPACA -TELL CITY Run number 0-M29-1

Sample location CUPOLA BAGHOUSE OUTLET

Relative humidity

Density of acetone (ρ_a) 0.7852 g/ml

Sample type	Sample identifiable	Liquid level marked and/or container sealed
Acetone rinse filter(s)	✓	✓

Acetone rinse container number Beaker W-5

Acetone rinse volume (V_{aw}) 145 ml

Acetone blank residue concentration (C_a) 0.0 mg/g

$W_a = C_a V_{aw} \rho_a$ = (0) (145) (.7852) = 0.0 mg

Date and time of wt 9-22-97 1600 Gross wt 113113.9 mg

Date and time of wt 9-23-97 0740 Gross wt 113113.0 mg

Average gross wt 113113.5 mg

Tare wt 113099.2 mg

Less acetone blank wt (W_a) 0.0 mg

Weight of particulate in acetone rinse (m_a) 14.3 mg

Filter(s) container number 0-M29-1 301675

Date and time of wt 9/16/97 1335 Gross wt 443.5 mg

Date and time of wt 9/17/97 1015 Gross wt 443.7 mg

Average gross wt 443.6 mg

Tare wt 442.7 mg

Weight of particulate on filter(s) (m_f) 0.9 mg

Weight of particulate in acetone rinse 14.3 mg

Total weight of particulate (m_n) 15.2 mg

Note: In no case should a blank residue >0.01 mg/g or 0.001% of the weight of acetone used be subtracted from the sample weight.

Remarks

Signature of analyst [signature]

Signature of reviewer

PES

SAMPLE ANALYTICAL DATA FORM

Plant WAUPACA - TELL CITY Run number O-M29-2

Sample location CUPOLA BAGHOUSE OUTLET

Relative humidity

Density of acetone (ρ_a) 0.7852 g/ml

Sample type	Sample identifiable	Liquid level marked and/or container sealed
Acetone rinse filter(s)	✓	✓

Acetone rinse container number Beaker No. W-6

Acetone rinse volume (V_{aw}) 130 ml

Acetone blank residue concentration (C_a) 0.0 mg/g

$W_a = C_a V_{aw} \rho_a$ = (0.0) (130) (.7852) = _____ mg

Date and time of wt 9-22-97 1600 Gross wt 107207.7 mg

Date and time of wt 9-23-97 0740 Gross wt 107207.2 mg

Average gross wt 107207.5 mg

Tare wt 107205.6 mg

Less acetone blank wt (W_a) 0.0 mg

Weight of particulate in acetone rinse (m_a) 1.9 mg

Filter(s) container number O-M29-2 301640

Date and time of wt 9/16/97 1335 Gross wt 445.7 mg

Date and time of wt 9/17/97 1015 Gross wt 445.3 mg

Average gross wt 445.5 mg

Tare wt 447.1 mg

Weight of particulate on filter(s) (m_f) −1.6 mg

Weight of particulate in acetone rinse 1.9 mg

Total weight of particulate (m_n) 0.3 mg

<u>Note</u>: In no case should a blank residue >0.01 mg/g or 0.001% of the weight of acetone used be subtracted from the sample weight.

Remarks

Signature of analyst [signature]

Signature of reviewer

SAMPLE ANALYTICAL DATA FORM

Plant WAUPACA – TELL CITY Run number 0-M29-3

Sample location CUPOLA BAGHOUSE OUTLET

Relative humidity

Density of acetone (ρ_a) 0.7852 g/ml

Sample type	Sample identifiable	Liquid level marked and/or container sealed
Acetone rinse filter(s)	✓	✓

Acetone rinse container number Beaker W-7

Acetone rinse volume (V_{aw}) 150 ml

Acetone blank residue concentration (C_a) 0.0 mg/g

$W_a = C_a V_{aw} \rho_a$ = (0.0) (150) (.7852) = 0.0 mg

Date and time of wt 9/22/97 1600 Gross wt 104264.4 mg

Date and time of wt 9/22/97 0740 Gross wt 104264.2 mg

Average gross wt 104264.3 mg

Tare wt 104256.1 mg

Less acetone blank wt (W_a) 0.0 mg

Weight of particulate in acetone rinse (m_a) 8.2 mg

Filter(s) container number 0-M29-3 301632

Date and time of wt 9/16/97 1335 Gross wt 447.6 mg

Date and time of wt 9/17/97 1015 Gross wt 447.8 mg

Average gross wt 447.7 mg

Tare wt 446.5 mg

Weight of particulate on filter(s) (m_f) 1.2 mg

Weight of particulate in acetone rinse 8.2 mg

Total weight of particulate (m_n) 9.4 mg

Note: In no case should a blank residue >0.01 mg/g or 0.001% of the weight of acetone used be subtracted from the sample weight.

Remarks

Signature of analyst [signature]

Signature of reviewer

PES

FIELD BLANK ANALYTICAL DATA FORM

Plant WAUPACA - TELL CITY

Sample location CUPOLA BAGHOUSE OUTLET

Relative humidity

Liquid level marked and container sealed W-8

Density of acetone (ρ_a) .7852 g/ml

Blank volume (V_a) 60 ml

Date and time of wt 9-22-97 1600 Gross wt 103861.1 mg

Date and time of wt 9-23-97 0740 Gross wt 103860.3 mg

Average gross wt 103860.7 mg

Tare wt 103859.2 mg

Weight of blank (m_{ab}) 1.5 mg

$$c_a = \frac{m_{ab}}{V_a \rho_a} = \frac{(\quad)}{(60)\ (.7852)} = _____ \text{ mg/g}$$

Note: In no case should a blank residue greater than 0.01 mg/g (or 0.001% of the blank weight) be subtracted from the sample weight.

Filters 3" Filter number 301642

Date and time of wt 9/16/97 1335 Gross wt 444.5 mg

Date and time of wt 9/17/97 1015 Gross wt 445.0 mg

Average gross wt 444.8 mg

Tare wt 445.9 mg

Difference wt -1.1 mg

Note: Average difference must be less than ±5 mg or 2% of total sample weight whichever is greater.

Remarks

Signature of analyst [signature]

Signature of reviewer

PES

REAGENT BLANK ANALYTICAL DATA FORM

Plant WAUPACA - TELL CITY

Sample location CUPOLA BAGHOUSE OUTLET

Relative humidity

Liquid level marked and container sealed W-9

Density of acetone (ρ_a) .7852 g/ml

Blank volume (V_a) 100 ml

Date and time of wt 9-22-97 1600 Gross wt 98454.8 mg

Date and time of wt 9-23-97 0740 Gross wt 98454.0 mg

Average gross wt 98454.4 mg

Tare wt 98454.5 mg

Weight of blank (m_{ab}) -0.1 mg

$$C_a = \frac{m_{ab}}{V_a \rho_a} = \frac{(-0.1)}{(100)(.7852)} = 0 \text{ mg/g}$$

Note: In no case should a blank residue greater than 0.01 mg/g (or 0.001% of the blank weight) be subtracted from the sample weight.

Filters 3" Filter number 301529

Date and time of wt 9/16/97 1335 Gross wt 336.2 mg

Date and time of wt 9/17/97 1015 Gross wt 336.0 mg

Average gross wt 336.1 mg

Tare wt 334.7 mg

Difference wt 1.4 mg

Note: Average difference must be less than ±5 mg or 2% of total sample weight whichever is greater.

Remarks

Signature of analyst [signature]

Signature of reviewer

METHOD 5
FINAL WEIGHT

Project Number: 5414.004 WAUPACA **Item Weighed:** BEAKERS - ACETONE RINSE

Date	~~9-22-97~~	9/22/97	9/23/97						
R.H. (%)									
Temp. (°F)		70	70						
Std. Wt.		See Below	See Below						
Analyst		[illegible]	[illegible]						
ID Number	Field Sample Number	1st	2nd	3rd	4th	5th	Final Wt. (g)	Tare Wt. (g)	Difference (mg)
W-1	I-M29-1	111757.3	111757.8				111757.6	109620.4	2137.2
W-2	I-M29-2	108731.4	108729.2				108730.3	102547.3	6183.0
W-3	I-M29-3	108102.2	108102.6				108102.4	102618.7	5483.7
W-4	I-M29-FH	98340.9	98340.4				98340.7	98327.0	13.7
W-5	O-M29-1	113113.9	113113.0				113113.5	113099.2	14.3
W-6	O-M29-2	107207.7	107207.2				107207.5	107205.6	1.9
W-7	O-M29-3	104264.4	104264.2				104264.3	104256.1	8.2
W-8	O-M29-FH	103861.1	103860.3				103860.7	103859.2	1.5
W-9	O-M29-BLK	98454.8	98454.0				98454.4	98454.5	-0.1
W-10	—								
	50,000.0	49999.1	49998.5						
	100,000.0	99999.6	99999.8						
	150,000.0	150000.3	150000.2						

PACIFIC ENVIRONMENTAL SERVICES, INC.

METHOD 5
TARE WEIGHT

Project Number: 5414.004 - Waupaca **Item Weighed:** 250 mL Beakers

Date	9/15/97 1500	9/16/97	9/17/97	9/17/97	9/18/97				
R.H. (%)	Placed in Dessicator	1505	1000	1605	1610				
Temp. (°F)		70	70	70	70.				
Std. Wt.									
Analyst		[illegible]	[illegible]	[illegible]	[illegible]				
ID Number	**Field Sample Number** ml	mg **1st**	**2nd**	**3rd**	**4th**	**5th**	**Final Wt. (g)**	**Tare Wt. (g)**	**Difference (mg)**
W-1	I-M29-1 500	109620.3	109618.4	109620.6	109620.1			109620.4	
W-2	I-M29-2 500	102547.1	102545.3	102547.5	102547.1			102547.3	
W-3	I-M29-3 500	102618.1	102617.1	102618.9	102618.5			102618.7	
W-4	I-M29-FH 125	98326.8	98325.3	98327.2	98326.8			98327.0	
W-5	O-M29-1 145	113099.2	113097.5	113099.3	113099.1			113099.2	
W-6	O-M29-2 130	107205.2	107203.8	107205.6	107205.6			107205.6	
W-7	O-M29-3 150	104255.8	104254.2	104256.3	104255.9			104256.1	
W-8	O-M29-FH 60	103858.9	103857.2	103859.4	103858.9			103859.2	
W-9	O-M29-BLK FH Aq. 100 ml	98454.3	98452.7	98454.7	98454.3			98454.5	
W-10		103805.8	103804.3	103806.3	103805.9			103806.1	
W-11		103244.9	103243.5	103245.4	103244.9			103245.2	
W-12		108209.1	108207.7	108209.8	108209.4			108209.6	
	Balance Check								
	Std. Weight	50000 mg	50000.0	50000.0	50000.0				
	Reading	49998.8	49998.3	49999.0	49998.4				
	Std Weight	100000.0	100000.0	100000.0	100000.0				
	Reading	99999.3	99998.0	99999.6	99998.2				
	Std Weight	150000.0	150000.0	150000.0	150000.0				
	Reading	150002.7	150001.2	150002.9	150001.8				

PACIFIC ENVIRONMENTAL SERVICES, INC.

METHOD 5
FINAL WEIGHT

Project Number: 5414.004 - WAUPACA **Item Weighed:** 3" & 4" Filters

Date	9/15/97 1330	9/16/97	9/17/97	9/17/97	9/18/97	Filter			
R.H. (%)	Placed in Dessicator	1335	1015	~~1335~~	0915	#			
Temp. (°F)		70	70	1630	70				
Std. Wt.				70					
Analyst									
ID Number	Field Sample Number	mg 1st	2nd	3rd	4th	5th	Final Wt. (g)	Tare Wt. (g)	Difference (mg)
W3-1	0-M29-1	443.5	443.7	—		301675	443.6	442.7	0.9
W3-2	0-M29-2	445.7	445.3	—		301640	445.5	447.1	-1.6
W3-3	0-M29-3	447.6	447.8	—		301632	447.7	446.5	1.2
W3-4	0-M29-FB	444.5	445.0	—		301642	444.8	445.9	-1.1
W3-5	0-M29-RB	336.2	336.0	—		301529	336.1	334.7	1.4
W4-1	I-M29-1	1792.5	1791.0	1791.1	—	1014	1791.1	614.3	1176.8
W4-2	I-M29-2	5222.7	5273.9	—		1019	5222.8	616.5	4606.3
W4-3	I-M29-3	3345.8	3341.5	3339.2	~~3338.8~~	1011	3340.4	609.9	2730.5
W4-4	I-M29-FB	612.4	612.4	—		1015	612.4	611.6	0.8
W4-5	I-M29-RB	619.6	619.7	—		1020	619.7	619.8	-0.1
	Balance Check								
	300 mg	299.9	300.0	300.0					
	440 mg	440.0							
	500 mg	499.9	499.9	500.0					
	1800 mg	1800.0							
	3340 mg	3340.0							
	5220 mg	5220.0							
	2000 mg		1999.9	2000.1					
	3000 mg		2999.9	3000.1					
	5000 mg		5000.3	4999.9					

PACIFIC ENVIRONMENTAL SERVICES, INC.

KING SCALES

J.A. KING & COMPANY INC.

PROFESSIONALS SINCE 1930

ISO 9002

REGULAR SERVICE INSPECTION REPORT

DATE 8-7-97

BILL TO LOCATION			SERVICE LOCATION
10695			6947
PACIFIC ENVIRONMENTAL SERV INC	315 Cherry Rd. Garner, N.C. 27529 (919) 772-9248	1803-A Associates Lane Charlotte, N.C. 28217 (704) 357-6344	PACIFIC ENVIRONMENTAL SERV INC
SUITE 200			SUITE 300
560 HERNDON PARKWAY			5001 S. MIAMI BLVD.
HERNDON, VA 20170-5240			RESEARCH TRI PK, NC 27711

P.O. #	MAINT. PERIOD	SCALE TYPE	L.S.D.	S.D.D.
104-97-0018	SEMI-ANNUAL	ELECTRONIC	02/12/97	08/14/97

SCALE MAKE	MODEL NO.	SERIAL NO.	LOCATION	COMMENT

URGENT

CALL TO SCHEDULE/ FRANK MEADOWS 919-941-0833 !!!

UNITS SVCD	@	ISO	@	TIME AT JOB SITE: AR	AM/PM	DP	AM/PM
[illegible]	[illegible]	[illegible]	QUANTITY	TRAVEL TIME:			
				HRS. REG. TIME FOR			MEN
				HRS. T & H	FOR		MEN
				MILEAGE	MILES @		HD FEE

Technician R.LEWIS Licence No. 761

Technician Licence No.

Owner's or Agent's Signature

J.A. KING & CO., Inc. will not be liable for any special, indirect or consequential damages, or loss of profit because of inoperability of equipment for any reason.

TARED FILTER LOG

NO.: 301671 I.D. NO.: _____

DATE/TIME	NAME	MASS
#1 4/11/96 1541	BJF	954.4
#2 5/3/96 929	BJF	954.3
#3		
#4		

AVERAGE TARE MASS : 954.35

NO.: 301674 I.D. NO.: _____

DATE/TIME	NAME	MASS
#1 4/11/96 1502	BJF	945.9
#2 5/2/96 1535	BJF	946.7
#3		
#4		

AVERAGE TARE MASS : 945.8

NO.: 301672 I.D. NO.: _____

DATE/TIME	NAME	MASS
#1 4/11/96 1542	BJF	945.2
#2 5/3/96 926	BJF	945.3
#3		
#4		

AVERAGE TARE MASS : 945.25

NO.: 301675 I.D. NO.: _____

DATE/TIME	NAME	MASS
#1 4/11/96 1502	BJF	942.8
#2 5/2/96 1541	BJF	942.6
#3		
#4		

AVERAGE TARE MASS : 942.7

NO.: 301673 I.D. NO.: _____

DATE/TIME	NAME	MASS
#1 4/11/96 1535	BJF	944.8
#2 5/3/96 932	BJF	944.8
#3		
#4		

AVERAGE TARE MASS : 944.8

NO.: 301676 I.D. NO.: _____

DATE/TIME	NAME	MASS
#1 4/11/96 1503	BJF	944.2
#2 5/2/96 1608	BJF	944.2
#3		
#4		

AVERAGE TARE MASS : 944.2

TARED FILTER LOG

NO.: 301641 I.D. NO.: _____

DATE/TIME	NAME	MASS
#1 8/11/96 1527	BJF	444.4
#2 5/2/96 1603	BJF	444.8
#3		
#4		

AVERAGE TARE MASS : 444.6

NO.: 301644 I.D. NO.: _____

DATE/TIME	NAME	MASS
#1 8/11/96 1533	BJF	446.9
#2 5/2/96 1557	BJF	447.1
#3		
#4		

AVERAGE TARE MASS : 447.0

NO.: 301642 I.D. NO.: _____

DATE/TIME	NAME	MASS
#1 8/11/96 1509	BJF	445.8
#2 5/2/96 1545	BJF	445.9
#3		
#4		

AVERAGE TARE MASS : 445.89

NO.: 301645 I.D. NO.: _____

DATE/TIME	NAME	MASS
#1 8/11/96 1522	BJF	446.1
#2 5/3/96 956	BJF	446.1
#3		
#4		

AVERAGE TARE MASS : 446.1

NO.: 301643 I.D. NO.: _____

DATE/TIME	NAME	MASS
#1 8/11/96 1526	BJF	445.3
#2 5/2/96 1504	BJF	445.3
#3		
#4		

AVERAGE TARE MASS : 445.3

NO.: 301646 I.D. NO.: _____

DATE/TIME	NAME	MASS
#1 8/11/96 1526	BJF	450.1
#2 5/2/96 1606	BJF	450.1
#3		
#4		

AVERAGE TARE MASS : 450.1

TARED FILTER LOG

NO.: 301635 I.D. NO.:			NO.: 301638 I.D. NO.: 97-330		
DATE/TIME	NAME	MASS	DATE/TIME	NAME	MASS
#1 4/11/96 1504	BJF	446.1	#1 4/11/96 1510	BJF	447.7
#2 5/2/96 1532	BJF	446.0	#2 5/2/96 1541	BJF	447.7
#3			#3		
#4			#4		
AVERAGE TARE MASS : 446.05			AVERAGE TARE MASS : 447.7		

NO.: 301636 I.D. NO.:			NO.: 301639 I.D. NO.:		
DATE/TIME	NAME	MASS	DATE/TIME	NAME	MASS
#1 4/11/96 1505	BJF	449.5	#1 4/11/96 1534	BJF	451.5
#2 5/2/96 1550	BJF	449.5	#2 5/2/96 1555	BJF	451.8
#3			#3		
#4			#4		
AVERAGE TARE MASS : 449.5			AVERAGE TARE MASS : 451.65		

NO.: 301637 I.D. NO.:			NO.: 301640 I.D. NO.:		
DATE/TIME	NAME	MASS	DATE/TIME	NAME	MASS
#1 4/11/96 1535	BJF	443.6	#1 4/11/96 1506	BJF	447.1
#2 5/2/96 1554	BJF	443.8	#2 5/2/96 1550	BJF	447.0
#3			#3		
#4			#4		
AVERAGE TARE MASS : 443.7			AVERAGE TARE MASS : 447.05		

TARED FILTER LOG

NO.: 301630 I.D. NO.: _____

DATE/TIME	NAME	MASS
#1 4/11/96 1504	BSF	449.1
#2 5/2/96 1531	BSF	448.9
#3		
#4		

AVERAGE TARE MASS : 449.0

NO.: 301633 I.D. NO.: _____

DATE/TIME	NAME	MASS
#1 4/11/96 1528	BSF	445.9
#2 5/2/96 1600	BSF	446.1
#3		
#4		

AVERAGE TARE MASS : 446.0

NO.: 301631 I.D. NO.: _____

DATE/TIME	NAME	MASS
#1 4/11/96 1805	BSF	449.6
#2 5/2/96 1530	BSF	448.5
#3		
#4		

AVERAGE TARE MASS : 448.55

NO.: 301634 I.D. NO.: _____

DATE/TIME	NAME	MASS
#1 4/11/96 1527	BSF	445.8
#2 5/2/96 1602	BSF	446.1
#3		
#4		

AVERAGE TARE MASS : 445.95

NO.: 301632 I.D. NO.: _____

DATE/TIME	NAME	MASS
#1 4/11/96 1508	BSF	446.5
#2 5/2/96 1547	BSF	446.4
#3		
#4		

AVERAGE TARE MASS : 446.45

NO.: _____ I.D. NO.: _____

DATE/TIME	NAME	MASS
#1		
#2		
#3		
#4		

AVERAGE TARE MASS : _____

TARED FILTER LOG

NO.: 301528 I.D. NO.: _____

DATE/TIME	NAME	MASS
#1 12/5/95 1004	BJF	324.4
#2 12/21/95 0904	BJF	323.9
#3		
#4		

AVERAGE TARE MASS : 324.15

NO.: 301531 I.D. NO.: 96-597

DATE/TIME	NAME	MASS
#1 12/5/95 1009	BJF	326.1
#2 12/5/95 1615	BJF	325.7
#3		
#4		

AVERAGE TARE MASS : 325.9

NO.: 301527 I.D. NO.: _____

DATE/TIME	NAME	MASS
#1 12/5/95 1006	BJF	334.9
#2 12/21/95 0953	BJF	334.5
#3		
#4		

AVERAGE TARE MASS : 334.7

NO.: 301532 I.D. NO.: 96-593

DATE/TIME	NAME	MASS
#1 12/5/95 1012	BJF	330.8
#2 12/7/95 1655	BJF	330.3
#3		
#4		

AVERAGE TARE MASS : 330.55

NO.: 301530 I.D. NO.: 96-272

DATE/TIME	NAME	MASS
#1 12/5/95 1008	BJF	338.6
#2 12/7/95 1650	BJF	338.1
#3		
#4		

AVERAGE TARE MASS : 338.35

NO.: 301533 I.D. NO.: 97-80

DATE/TIME	NAME	MASS
#1 12/5/95 1015	BJF	326.6
#2 12/7/96 1653	BJF	325.9
#3 12/21/95 876	BJF	325.8
#4		

AVERAGE TARE MASS : 325.85

FILTER WEIGHT LOG SIZE 110 mm

Filter No.	Weight g.	Date/Time m/d/24hr	Intls	Weight g.	Date/Time m/d/24hr	Intls	Weight g.	Date/Time m/d/24hr	Intls	Average
1023	0.6105	9/19 1252	BAD	0.6105	9/19 0009	BAD				0.6105
1024	0.6126	9/19 1253	BAD	0.6125	9/19 ~~1203~~ 0003	BAD				0.6126
1025	0.6098	9/19 1255	BAD	0.6097	9/19 ~~1204~~ 0004	BAD				0.6098
1026	0.6236	9/19 1256	BAD	0.6234	9/19 ~~1205~~ 0002	BAD				0.6235
1027	0.6238	9/19 1257	BAD	0.6237	9/19 ~~1157~~ 2357	BAD				0.6238
1028	0.6223	9/19 1258	BAD	0.6221	9/19 ~~1200~~ 0000	BAD				0.6222
1029	0.6259	9/19 1259	BAD	0.6259	9/19 ~~1159~~ 2359	BAD				0.6259
1030	0.6220	9/19 1301	BAD	0.6219	9/19 ~~1155~~ 2355	BAD				0.6220
1031	0.6190	9/19 1302	BAD	0.6190	9/19 ~~1155~~ 2355	BAD				0.6190
10										

FILTER WEIGHT LOG SIZE 110 mm

Filter No.	Weight g.	Date/Time m/d/24hr	Intls	Weight g.	Date/Time m/d/24hr	Intls	Weight g.	Date/Time m/d/24hr	Intls	Average
1012	0.6250	8/27 1942	BAD	0.6249	8/28 0001	BAD	0.6246	9/4 2105	BAD	~~0.6250~~ 0.6248
1013	0.6110	8/27 1943	BAD	0.6109	8/28 0059	BAD	0.6108	9/4 2109	BAD	0.6110
1014	0.6144	8/27 1944	BAD	0.6142	8/28 0067	BAD	0.6141	9/4 2058	BAD	0.6143
1015	0.6116	8/27 1945	BAD	0.6115	8/28 0058	BAD	0.6113	9/4 2059	BAD	0.6116
1016	0.6191	8/27 1946	BAD	0.6189	8/28 0054	BAD	0.6188	9/4 2055	BAD	0.6190
1017	0.6160	8/27 1947	BAD	0.6159	8/28 0055	BAD	0.6157	9/4 2110	BAD	0.6159
1018	0.6164	8/27 1949	BAD	0.6163	8/28 0053	BAD	~~0.6179~~ 0.6164	9/4 2052	BAD	0.6165
1019	0.6165	8/27 1950	BAD	0.6164	8/28 0051	BAD	0.6162	9/4 2113	BAD	0.6165
1020	0.6200	8/27 1951	BAD	0.6199	8/28 0049	BAD	0.6196	9/4 2056	BAD	~~0.6200~~ 0.6198
1021	0.6109	9/19 1249	BAD	0.6109	9/19 0008	BAD				0.6109
1022	0.6181	9/19 1250	BAD	0.6181	9/19 0005	BAD				0.6181

FILTER WEIGHT LOG SIZE 11.0 cm

Filter No.	Weight g.	Date/Time m/d/24hr	Intls	Weight g.	Date/Time m/d/24hr	Intls	Weight g.	Date/Time m/d/24hr	Intls	Average
1001	0.6233	8/27 1920	BAD	0.6231	8/28 0116	BAD				0.6232
1002	0.6263	8/27 1923	BAD	0.6262	8/28 0113	BAD				0.6263
1003	0.62230	8/27 1929	BAD	0.6224	8/28 011	BAD				0.6226
1004	0.6099	8/27 1930	BAD	0.6098	8/28 0112	BAD				0.6099
1005	0.6106	8/27 1932	BAD	0.6104	8/28 0111	BAD				0.6105
1006	0.6101	8/27 1934	BAD	0.6100	8/28 0109	BAD				0.6101
1007	0.6095	8/27 1935	BAD	0.6093	8/28 0108	BAD				0.6094
1008	0.6112	8/27 1937	BAD	0.6111	8/28 0107	BAD				0.6112
1009	0.6119	8/27 1938	BAD	0.6118	8/28 0105	BAD				0.6119
1010	0.6106	8/27 1939	BAD	0.6105	8/28 0104	BAD	0.6104	9/4 2107	BAD	0.6106
1011	~~0.60~~	8/27 1940	BAD	0.6098	8/28 0103	BAD	0.6096	9/4 2112	BAD	0.6099
	0.6100									

FILTER WEIGHT LOG SIZE_____

Filter No.	Weight g.	Date/Time m/d/24hr	Intls	Weight g.	Date/Time m/d/24hr	Intls	Weight g.	Date/Time m/d/24hr	Intls	Average
2473	0.3607	9/5 2351	BAD	0.3605	9/6 1542	BAD				0.3606
2474	0.3860	9/5 2352	BAD	0.3854	9/6 1546	BAD				0.3860
2475	0.3859	9/5 2353	BAD	0.3856	9/6 1547	BAD				0.3857
2476	0.~~3737~~	9/5 2354	BAD	0.3729	9/6 1548	BAD				0.3730
	0.3730									
2477	0.3865	9/6 1632	BAD	0.3862	9/7 1541	BAD				0.3864
2478	0.3844	9/5 1626	BAD	0.3844	9/7 1550	BAD				0.3844
2479	0.3933	9/5 1627	BAD	0.3933	9/7 1548	BAD				0.3933
2480	0.3864	9/5 1631	BAD	0.3863	9/7 1542	BAD				0.3864
2481	0.3792	9/5 1628	BAD	0.3792	9/7 1547	BAD				0.3792
2482	0.4027	9/5 2343	BAD	0.4027	9/6 1535	BAD				0.4027
2483	0.3841	~~9/5 23~~	BAD	0.3841	9/7 1546	BAD				0.3841
		9/6 1629								

FILTER WEIGHT LOG SIZE_____

Filter No.	Weight g.	Date/Time m/d/24hr	Intls	Weight g.	Date/Time m/d/24hr	Intls	Weight g.	Date/Time m/d/24hr	Intls	Average
2484	0.3903	9/5 1630	BAD	0.3902	9/6 1543	BAD				0.3903
2485	0.3970	9/5 2342	BAD	0.3970	9/6 1541	BAD				0.3970
2486	0.3817	9/5 2344	BAD	0.3816	9/6 1534	BAD				0.3817
2487	0.3809	9/6 1630	BAD	0.3809	9/6 1545	BAD				0.3809
2488	0.3758	9/5 2345	BAD	0.3757	9/6 1539	BAD				0.3758
2489	~~0.3~~	9/5 2350	BAD	0.4059	9/6 1527	BAD				0.4060
	0.4060									
2490	0.3854	9/5 2348	BAD	0.3854	9/6 1531	BAD				0.3854
2491	0.3768	9/5 2340	BAD	0.3769	9/6 1533	BAD				0.3769
2492	0.3777	9/5 2339	BAD	0.3778	9/6 1538	BAD				0.3778
2493	0.3959	9/5 2341	BAD	0.3960	9/6 1529	BAD				0.3960
2494	0.3717	9/5 2347	BAD	0.3716	9/6 1525	BAD				0.3717

Appendix B.2

Analytical Data - Metals

TRIANGLE LABS

CASE NARRATIVE

Analysis of Samples for the Presence of Trace Metals

Method 29 April 1996 Rev.

Client:	Pacific Environmental Services
TLI Project Number:	43231
Date:	November 6, 1997

This report should only be reproduced in full.
Any reproduction of this report requires permission from
Triangle Laboratories, Inc.

Rev. 25-Sep-96

Triangle Laboratories, Inc.
801 Capitola Drive
Durham, NC 27713-4411
919-544-5729
P.O. Box 13485
Research Triangle Park, NC 27709-3485
Fax # 919-544-5491

Overview

Five train samples, three blank train samples and a DI water sample were analyzed for silver (Ag), arsenic (As), barium (Ba), beryllium (Be), cadmium (Cd), cobalt (Co), chromium (Cr), manganese (Mn), nickel (Ni), phosphorus (P), lead (Pb), antimony (Sb), selenium (Se), thallium (Tl), zinc (Zn), and mercury (Hg). For all analyses, the samples and associated QC samples were prepared and analyzed following the guidelines of Method 29 April 1996 Rev. Results reported relate only to the items tested.

QC Remarks

The release of this set of data by Triangle Laboratories, Inc. was authorized by the Quality Control Chemist who has reviewed each sample data package individually following a series of inspections/reviews. When applicable, general deviations from acceptable QC requirements are identified below and comments are made on the effects of these deviations upon the validity and reliability of the results. Specific QC issues associated with this particular project are:

Sample Receipt:

Eight train samples (without the filters) were received at 5 ^{0}C on September 12, 1997 in good condition under project# 43231. (The acetone rinse samples were temporarily put on hold and then reentered into the system on September 23, 1997) The components for the reagent blanks were not received with the samples. The containers for inlet (FHAce and FHAR) and outlet (FHAce and FHAR) blank were not marked "BLK" like the remaining blank containers.

One reagent blank sample (except the KMnO4 sample) was received without coolant on September 15, 1997 in good condition under project# 43243. The KMnO4 sample arrived broken and the sample had leaked out, therefore, an analysis could not be performed for this sample. The sample also arrived without a client chain-of-custody. The Acetone rinse for the reagent blank was cancelled per the client's request.

Eight filter and acetone rinse samples and one reagent blank filter were received without coolant on September 23, 1997 under project# 43350. All components that were received on September 12, 15, and 23, 1997 were processed under project 43231. The components for the inlet and outlet reagent blanks were combined on order to make one complete reagent blank train sample. Only eight samples were reported in this data package.

Sample Preparation:

Laboratory documentation of the sample preparation is included in the data package.

Instrumentation:

Silver (Ag), arsenic (As), barium (Ba), beryllium (Be), cadmium (Cd), cobalt (Co), chromium (Cr), manganese (Mn), nickel (Ni), phosphorus (P), lead (Pb), antimony (Sb), selenium (Se), and zinc (Zn) concentrations were determined by Inductively Coupled Plasma Emission Spectroscopy (ICP). Thallium (Tl) concentrations for the front half samples I-M29-1 FH, I-M29-FIELD BLANK FH, O-M29-1 FH, O-M29-3 FH, I-M29-3 FH, and I-M29-2 FH were determined by Inductively Coupled Plasma Emission Spectroscopy (ICP).

Thallium (Tl) concentrations for the back half samples and front half samples (except samples I-M29-1 FH, I-M29-FIELD BLANK FH, O-M29-1 FH, O-M29-3 FH, I-M29-3 FH, and I-M29-2 FH) concentrations were analyzed by Graphite Furnace Atomic Absorption (GFAA). Due to instrument failure, all samples could not be analyzed by GFAA.

Mercury (Hg) concentrations were determined by Cold Vapor Atomic Absorption (CVAA).

The linear range for the instrument TJA 61E Trace Analyzer was based on four standards and a blank, which established a correlation coefficient value greater than or equal to 0.995. A calibration curve, based on a blank and one standard, is established for each analytical run, followed by a check high standard and an initial calibration verification (ICV). The check high standard does not deviate from the calibration curve by more than 5%. In addition, continuing calibration verifications (CCVs) are performed throughout the analytical run.

A Reporting Detection Limit (RDL) is used instead of an Instrument Detection Limit (IDL). The spectrometer and atomic absorption instruments can achieve low detection limits between 0.2-8 ppb levels for many analytes. Triangle Labs is using RDL values of 1-10 times the IDL as detection limits for reporting purposes.

Data Review:

All analytes found in the method blank (MB) prepared on September 25-26, 1997 are detected at a level equal to or less than the respective Reporting Detection Limits (RDLs) except for Zn. All analytes found in the method blank (MB) prepared on October 02-03, 1997 are detected at a level equal to or less than the respective Reporting Detection Limits (RDLs) except for Mn. The following guidelines may be used to assess analyte concentrations relative to the method blank: 1. Analyte quantitations should be considered valid if the level of blank contamination is less than five percent of the level detected in the field sample, 2. Analyte quantitations should be considered estimated if the

analyte level in the sample is five to twenty times the level of the analyte in the blank, or 3. Analytes whose level in a sample is the same as or less than five times the level detected in the associated blank should be considered present likely due to laboratory contamination and not native to the sample. Please note that the concentrations for samples prepared on September 25-26, 1997 should be considered biased high for Zn. Also note that the concentrations for samples prepared on October 02-03, 1997 should e considered biased high for Mn.

The client Ids did not match the Ids on the sample labels. The sample labels were used to identify the samples.

A sampling date was not supplied by the client for the reagent blank received on September 15, 1997, therefore, the sampling to analysis holding times cannot be determined. The sample was analyzed within 23 days of sample receipt at Triangle Laboratories. Due to laboratory problems, samples I-M29-FHAR,BLK-5% 10% BH and O-M29-FHAR,BLK-5% 10% BH were not analyzed within the 28 day sampling to analysis holding time for Hg. All samples were analyzed within the six month sampling to analysis holding time for all other requested analytes.

Due to a confusion in the laboratory, the sample preparation procedure deviated from the method. The filter and acetone rinse samples (except I/O REAGENT BLANK FH) were not prepared simultaneously with the HNO3 rinse samples on September 25-26, 1997. The filter and acetone rinse samples were prepared on October 02-03, 1997. The samples were analyzed separately and the concentrations from each analysis were added together in order to obtain a composited concentration for the front half samples. Only the elements with concentrations greater than the RDL were added together. If one concentration was below the RDL and one concentration was above the RDL, the concentration above the RDL was used in the calculations. If both concentration for each analysis from both preps were below the RDL, the concentration from the first analysis was used in the calculations. The results for the QC samples were not combined, however, the individual results for the QC samples were included in the data package.

A duplicate analysis is not reported for elements analyzed by GFAA. The GFAA instrument analyzes two separate aliquots of the sample and averages the values for a final result. These two analyses agree within a RPD of 20% or a second run is done for that sample. The ICP instrument analyzes one continuous aliquot three times and averages the values for a final result. The ICP does not take two separate aliquots, therefore a DA is performed.

The post-digestion spike (PDS) for Tl for the sample I-M29-1 FH (prepared on October 02-03, 1997) demonstrated a percent recovery outside the QC criteria of 85-125 percent, which indicates significant matrix effects specific to this analyte in the native sample matrix. The Method of Standard Additions (MSA) was performed on all of the samples prepared on October 02-03-1997. The MSA results are reported if the correlation coefficient value is at least 0.995. Only samples I-M29-FHAR,BLK BH (prepared on September 25-26, 1997), O-M29-2 FH and O-M29-FIELD BLANK FH had passing correlation coefficients. The remaining samples that were analyzed by GFAA demonstrated significant matrix interferences during analysis and the results reported are considered underestimated.

Due to instrument failure, all of the samples could not be analyzed by MSA for a second time. The initial results for all of the samples (except for the samples that had passing MSAs and for samples I-M29-1 FH, I-M29-2 FH, and I-M29-3 FH) were taken from the initial GFAA analysis. The samples I-M29-1 FH, I-M29-2 FH, and I-M29-3 FH were reanalyzed by ICP and the Tl concentrations were taken from the reanalysis data.

The post-digestion spike (PDS) for P and Tl for samples I-M29-1 FH and I-M29-1 BH demonstrated percent recoveries outside the QC criteria, which may indicate significant matrix effects specific to these analytes in the native sample matrix. Please note that these samples should be considered biased low for these elements due to matrix interferences.

The post-digestion spike (PDS) for Ag for the sample I-M29-2 FH demonstrated a percent recovery slightly outside the QC criteria, but does not indicate any significant matrix effects specific to this analyte in the native sample matrix.

The pre-digestion spike (MS) and the pre-digestion spike duplicate (MSD) for Hg for the sample I-M29-3-5% 10% BH demonstrated percent recoveries outside the QC criteria, which may indicate significant matrix effects specific to this analyte in the native sample matrix. Please note that this sample should be considered biased low for Hg due to matrix interferences.

The recoveries for the post-digestion spike (PDS) are not reported for Mn, Pb, and Zn for sample I-M29-1 FH and I-M29-2 FH . The spike concentrations added were insignificant in comparison to the levels of these analytes present in the native sample.

The recoveries for the pre-digestion spike (MS) and the pre-digestion spike duplicate (MSD) are not reported for Hg for samples I-M29-2-5% 10% BH and O-M29-1-5% 10% BH. The spike concentrations added were insignificant in comparison to the levels of this analyte present in the native sample.

QC requirements:

The duplicate analyses for analytes analyzed by GFAA cannot be considered valid qualifiers if the concentrations of the analytes in the original and/or duplicate sample are not at least five times the respective RDL. The RPDs for these analyses are indicated by "<RDL" in the Analyte Summary Reports.

The duplicate analyses for analytes analyzed by ICP cannot be considered valid qualifiers if the concentrations of the analytes in the original and/or duplicate sample are not at least ten times the respective RDLs. The RPDs for these analyses are indicated by or "<RDL" in the Analyte Summary Reports.

For duplicate analyses which are valid qualifiers, the quality control RPD is ± 20.0 percent. If RPDs are outside this range, interferences are suspected.

The serial dilution analyses for analytes analyzed by GFAA cannot be considered valid qualifiers if the concentrations of the analytes in the serial dilution sample are not at least five times the respective RDLs. The serial dilution RPDs for these analyses are indicated by "<RDL" in the Analyte Summary Reports.

The serial dilution analyses for analytes analyzed by ICP cannot be considered valid qualifiers if the concentrations of the analytes in the serial dilution sample are less than ten times the respective RDLs. The serial dilution RPDs for these analyses are indicated by "<RDL" in the Analyte Summary Reports.

For serial dilution analyses which are valid qualifiers, the quality control RPD is ± 10.0 percent. If RPDs are outside this range, interferences are suspected.

The quality control range for percent recoveries of laboratory control spiked samples is 80-120.

The quality control range for percent recoveries of spiked samples is 75-125. If recoveries are outside this range, a matrix effect is suspected.

If the analyte concentrations analyzed by GFAA in the native samples are less than five times the respective RDLs, or if valid serial dilution analyses demonstrate RPDs outside the ten percent quality control range, the percent recoveries of post-digestion spiked samples is 75-125. If recoveries are outside this range, all matrix-related samples are analyzed by the Method of Standard Additions (MSA). The MSA analysis for each sample is reported only if the correlation coefficient value is at least 0.995.

By our interpretation, the analytical data in this project are valid based on the guidelines of Method 29 April 1996 Rev. Any specific QC concerns or problems have been discussed in the QC REMARKS section with emphasis on their effect on the data. Should Pacific Environmental Services have any questions or comments regarding this data package, please feel free to contact Project Scientist, Amy J. Boehm, at (919) 544-5729 ext.268.

For Triangle Laboratories, Inc.,

Report Preparation

Linda F. Jones
Report Preparation Chemist

Quality Control

Brenda H. Bell
Report Preparation Chemist

The total number of pages in this data package is: 397.

TRIANGLE LABS

TRIANGLE LABORATORIES, INC.

LIST OF CERTIFICATIONS AND ACCREDITATIONS

ENVIRONMENTAL

American Association for Laboratory Accreditation. Accredidation pending. Certificate Number 0226-01. Accreditation for technical competence in Environmental Testing.(Including Waste Water, Sol/Haz Waste, Pulp/Paper, and Air Matrices) Parameters are AOX/TOX, and Dioxin/Furan. Method 1613 for Drinking Water.

State of Alabama, Department of Environmental Management. Expires December 31, 1997. Laboratory I.D. # 40950. Dioxin in drinking water.

State of Alaska, Department of Environmental Conservation. Expires December 21, 1997. Certificate number OS-00397. Dioxin in drinking water.

State of Arizona, Department of Health Services. Expires May 26, 1998. Certificate #AZ0423. Drinking Water for Dioxin, Dioxin in WW and S/H Waste.

State of Arkansas, Department of Pollution Control and Ecology. Expires February 18, 1998. Pulp/paper, soil, water, and Hazardous Waste for Dioxin/Furan; AOX/TOX.

State of California, Department of Health Services. Expires August 31, 1999. Certificate #1922. Selected Metals in Waste Water; Volatiles, Semi-volatiles, and Dioxin/furan in WW and Sol/Haz Waste. Dioxin in drinking water.

State of Connecticut, Department of Health Services. Recertification pending. Registration # PH-0117. Dioxin in drinking water.

Delaware Health and Social Services. Expires December 31, 1997. Certificate #NC 140. Dioxin in drinking water.

Florida Department of Health and Rehabilitative Services. Expires June 30, 1998.Dioxin in DW. Drinking Water ID HRS# 87424. Metals, Extractable Organics (GC/MS), Pesticides/PCB's (GC) and Volatiles (GC/MS) in Environmental Samples. Environmental water ID HRS# E87411.

Hawaii Department of Health. Expires March 1, 1998. Dioxin in drinking water. "Accepted" status for regulatory purposes .

Revised 10/28/97 RM

Printed 10/29/97

Triangle Laboratories, Inc.
801 Capitola Drive
Durham, NC 27713-4411
919-544-5729
P.O. Box 13485
Research Triangle Park, NC 27709-3485
Fax # 919-544-5491

Idaho Department of Health and Welfare. Expires November 30, 1997. Dioxin in drinking water.

State of Kansas, Department of Health and Environment. Expires January 31, 1998. Environmental Analyses/Non potable Water and Solid and Hazardous Waste. Method 1613 for drinking water. ID #'s - Drinking water and/or pollution control - E-215. Solid or Hazardous Waste - E-1209.

Commonwealth of Kentucky, Department for Environmental Protection. Expires December 31, 1997. ID#90060. Dioxin in drinking water.

Maryland Department of Health and Mental Hygiene. Expires September 30, 1998. Certification #235. Drinking water by Method 1613A.

State of Michigan, Department of Public Health. Expires June 3, 1998. Drinking water by Method 1613.

Mississippi State Department of Health. No expiration date.. Dioxin in drinking water.

Montana Department of Health and Environmental Services. Expires December 31, 1997. Dioxin in drinking water.

State of New Jersey, Department of Environmental Protection and Energy. Extended by state. Temporary certificate until December 31, 1997. ID #67851. BNAs and Volatiles. Dioxin in drinking water.

State of New Mexico, Environment Department. Recertification pending. Dioxin in drinking water.

New York State Department of Health. Expires April 1, 1998. ID #11026. Environmental Analyses of non-potable Water, Solid and Hazardous Waste. Method 1613 in DW.

State of North Carolina, Department of Environment Health and Natural Resources Expires August 31, 1999. Certificate # 37751. Dioxin in drinking water.

State of North Carolina, Department of Environment, Health, and Natural Resources, Division of Environmental Management. Expires December 31, 1997. Certificate # 485. Metals, pesticides & PCBs, semi-volatiles and volatiles; TCLP.

North Dakota State Department of Health and Consolidated Laboratories. Expires December 31, 1997. Certificate # R-076. Effective October 4, 1993. Dioxin in drinking water.

Oklahoma Department of Environmental Quality. Expires August 31, 1998. Laboratory #9612. Dioxin by 1613A, 8290 and 8280.

State of South Carolina, Department of Health and Environmental Control. Expires April 1, 1998. Certificate number #99040001 (drinking water). Expires August 31, 1999. Certificate number #99040002 (other parameters). Dioxin/Furans, BNA, Volatiles, and PCBs/pesticides under Clean Water Act, 2,3,7,8-TCDD for Drinking Water, and Organic extractables for Solid and Hazardous Waste.

State of Tennessee. Department of Environment and Conservation. Expires February 5, 1999. ID #02992. *Method 1613 Drinking water only.*

U.S. Department of Agriculture Soil Permit. Expires September 30, 2001. Permit No. S-3790. Under the authority of the Federal Plant Pest Act, permission is granted to receive foreign soil samples for use in laboratory analysis.

U.S. Army Corps of Engineers. Expires November 30, 1997. Validated to perform methods 8280 & 8290 for Lockbourne Landfill Site Investigation, Defense Distribution Depot Projects, and assorted projects for the USACE North Pacific Division Laboratory.

U.S. EPA Region V. Expires November 14, 1999. Dioxin in drinking water.

U.S. EPA Region VIII, for the State of Wyoming. Expires November 13, 1997. Dioxin in drinking water.

State of Utah, Department of Health. Expires December 31, 1997. Certificate Number E-166. Certification for the following parameters: Semi-Volatiles and Volatiles under RCRA; Volatiles under Clean Water Act; Dioxin/furans by Method 8280; Drinking water for Dioxin by Method 1613; Metals including Mercury and Microwave Digestion.

Commonwealth of Virginia, Department of General Services, Division of Consolidated Laboratory Services. Expires June 30, 1998. ID # 00341. Dioxin in drinking water.

State of Washington, Department of Ecology. Expires September 11, 1998. Lab Accreditation Number C067. Scope of Accreditation applies to water analyses for Polychlorinated Dibenzo-p-dioxins and Polychlorinated Dibenzofurans, BNA Extr (Semivolatile) Organics and Purgeable (Volatile) Organics.

State of Washington, Department of Health. Expires April 30, 1998. Dioxin in drinking water. Lab I.D. 129

State of West Virginia, Department of Health. Expires December 31, 1997. Certificate No. 9923(C). Dioxin in drinking water.

State of Wisconsin, Department of Natural Resources. Expires August 31, 1998. Laboratory ID Number 999869530. Certification for the following categories of Organics: Purgeable, Base/Neutral, Acid, PCBs, and Dioxin. Expires November 14, 1999. Laboratory ID 999869530. Dioxin in drinking water.

PHARMACEUTICAL

Drug Enforcement Agency (DEA). Expires November 30, 1997. Registration number RT01195835. Controlled substance registration for schedules 1,2,3,3N,4,5.

N.C. Department of Human Resources. Expires October 31, 1998. Registration number NC-PT 0000 0031. North Carolina controlled substances registration. Application submitted for renewal.

Food & Drug Administration (FDA) Registration. Expires June 1998. ID #'s 001500 1053481. Annual registration of drug establishment. Annual registration of drug establishment.

OTHER

Clinical Laboratory Improvement Amendments (CLIA) Registration. Expires May 30, 1999. ID # 34D0705123. Department of Health & Human Services, Health Care Financing Administration.

U.S. EPA Large Quantity Hazardous Waste Generator. No expiration date. EPA ID #NCD982156879. Permit indicates that the laboratory is a large generator of hazardous waste.

North Carolina Radioactive Materials License. Expires April 30 1998. License No. 032-0954-1. License authorizes the licensee to receive, acquire, own, possess, transfer, import and use such radioactive materials as designated.

North Carolina General License for Radiation Protection. No. expiration date. License No. 032-875-OG. The general license applies only to radioactive material contained in devices which have been manufactured and labeled in accordance with specific requirements.

ABBREVIATIONS

BH = Back Half
CCB = Continuing Calibration Blank
CCV = Continuing Calibration Verification
CHECK HS = Check High Standard
D = DUP = Analytical Duplicate (Prepared Duplicate)
DA = Duplicate Analysis
FH = Front Half
FV = Final Digestate Volume
ICB = Initial Calibration Blank
ICV = Initial Calibration Verification
ICSAB = Interference Check Solution (Solution AB)
I = Initial
F = Final
Solution AB contains common interferents in addition to the analyte of interest.
IDL = Instrument Detection Limit
L = Serial Dilution
LCS = Laboratory Control Spike Sample
MB = Method Blank
MPV = Mercury Preparation Volume
MS = Pre-digestion Spike
MSD = Pre-digestion Spike Duplicate
N/A = Not Applicable
N/Av = Not Available
N/V = Not Valid
PDS = Post-digestion Spike
%REC = Percent Recovery
RDL = Reporting Detection Limit
RPD = Relative Percent Difference
T = Analytical Triplicate (Prepared Triplicate; for Hg analysis by Method 7471 only)
TV = Total Sample Volume
< = Analyte concentration in the sample is less than the respective RDL

STANDARD CONCENTRATIONS
for the TJA 61E TRACE ANALYZER

Analyte	Units	High Std	ICV/CCV	ICSAB	RDL	Wavelength
Ag	ppb	1000	500	500	1	3280
As	ppb	1000	500	500	5	1890
Al	ppb	1000	500	500000	50	3082
B	ppb	1000	500	500	7	2496
Ba	ppb	1000	500	500	2	4934
Be	ppb	1000	500	500	1	3130
Ca	ppb	1000	500	500000	60	3179
Cd	ppb	1000	500	500	1	2265
Ce	ppb	1000	500	500	3	4186
Co	ppb	1000	500	500	1	2286
Cr	ppb	1000	500	500	2	2677
Cu	ppb	1000	500	500	2	3247
Fe	ppb	1000	500	200000	40	2714
K	ppb	10000	5000	19000	220	7664
Li	ppb	1000	500	500	1	6706
Mg	ppb	1000	500	500000	30	2790
Mn	ppb	1000	500	500	2	2576
Mo	ppb	1000	500	500	2	2020
Na	ppb	10000	5000	5000	300	3302
Ni	ppb	1000	500	500	3	2316
P	ppb	1000	500	500	30	2149
Pb	ppb	1000	500	500	2	2203
Sb	ppb	1000	500	500	4	2068
Se	ppb	1000	500	500	3	1960
Sn	ppb	1000	500	500	13	1899
Sr	ppb	1000	500	650	1	4215
Ti	ppb	1000	500	500	8	3349
Tl	ppb	1000	500	500	5	1908
V	ppb	1000	500	500	2	2924
Zn	ppb	1000	500	500	12	2062

Note: Use this reference page to review the raw data from the TJA 61E Trace Analyzer.

This page includes the standard concentrations for the check high standard, initial calibration verification (ICV), continuing calibration verification (CCV), and the interference check solution (ICSAB). In addition the reporting detection limit (RDL) and wavelength are reported for each analyte.

Revision Date: 15-Jul-96

CALCULATIONS FOR AIR SAMPLES

RESULTS FOR TRACE METALS (except mercury):

$$\text{RESULT in } \mu g \text{ (Front Half)} = \frac{\mu g/L * FV\ (mL) * DF}{1000\ mL/L}$$

$$\text{RESULT in } \mu g \text{ (Back Half \& Impingers)} = \frac{\mu g/L * TV\ (mL) * FV\ (mL) * DF}{mL\ used * 1000\ mL/L}$$

FV = final volume in mL
TV = total volume in mL
DF = Dilution Factor

The RESULTS for combined Front Half & Back Half samples use the same calculation as the Back Half & impinger samples.

RESULTS FOR MERCURY (Hg):

RESULT in µg (Front Half) = µg/L * (mL FV/mL aliquot) * MPV * DF

RESULT in µg (Back Half & Impingers) = µg/L * (mL TV/mL aliquot) * MPV * DF

MPV = mercury preparation volume = 0.1 L

%REC (Percent Recovery) for MS/MSD Hg spikes:

$$\%REC = \frac{\text{spike sample results - original sample results}}{\text{true spike sample results}} * 100$$

NOTE: Original sample results less than the RDL are not used in calulations.

%REC (Percent Recovery) for PDS:

$$\%REC = \frac{\text{Spike sample } \mu g/L \text{ conc. - original sample } \mu g/L \text{ conc.}}{\text{spike conc. } (\mu g/L)} * 100$$

%REC (Percent Recovery) for LCS/LCSD:

$$\%REC = \frac{\text{Spike sample } \mu g/L \text{ conc.}}{\text{spike conc. } (\mu g/L)} * 100$$

RPDs:

$$RPD = \frac{|\text{Result 2 - Result 1}|}{(\text{Result 2 + Result 1})/2} * 100$$

Rev. 2-Oct-96

Client: **Pacific Environmental Services**
Project Number: **43231**

Sample Report

Client Sample ID:	I-M29-FHAR,FIELD BLANK FH
TLI Sample ID:	183-3-1B,184-23-4AB FH
Date Received:	September 12,15,& 23, 1997
Date Prepared:	Sept. 25-26 & Oct. 2-3, 1997
Date Analyzed:	October 7,8,23 & 29-30, 1997
Matrix:	Air

Analyte	Conc. (ug/L)	mL Total Vol.	mL Used	mL Final Vol.	Dilution Factor	Total ug Result
Ag	72.316	N/A	N/A	100	1	7.23
As	32.624	N/A	N/A	100	1	3.26
Ba	503.025	N/A	N/A	100	1	50.3
Be	-51.180	N/A	N/A	100	1	< 0.100
Cd	1717.172	N/A	N/A	100	1	172
Co	35.480	N/A	N/A	100	1	3.55
Cr	329.116	N/A	N/A	100	1	32.9
Mn	343.918	N/A	N/A	100	1	34.4
Ni	190.203	N/A	N/A	100	1	19.0
P	1251.931	N/A	N/A	100	1	125
Pb	5973.582	N/A	N/A	100	1	597
Sb	53.660	N/A	N/A	100	1	5.37
Se	44.688	N/A	N/A	100	1	4.47
Tl	-6.404	N/A	N/A	100	1	< 0.500
Zn	1661.507	N/A	N/A	100	1	166

Triangle Laboratories, Inc.
801 Capitola Drive * Durham, North Carolina 27713
Tele: (919) 544-5729 * Fax: (919) 544-5491

Printed: 07-Nov-97 at 11:03 AM

Client: **Pacific Environmental Services**
Project Number: **43231**

Sample Report

Client Sample ID:	I-M29-FHAR,BLK BH
TLI Sample ID:	183-3-1BC BH
Date Received:	September 12, 1997
Date Prepared:	September 25-26, 1997
Date Analyzed:	October 07-08, 1997
Matrix:	Air

Analyte	Conc. (ug/L)	mL Total Vol.	mL Used	mL Final Vol.	Dilution Factor	Total ug Result
Ag	4.852	300	300	100	1	0.485
As	-5.449	300	300	100	1	< 0.500
Ba	3.570	300	300	100	1	0.357
Be	0.154	300	300	100	1	< 0.100
Cd	40.727	300	300	100	1	4.07
Co	-6.784	300	300	100	1	< 0.100
Cr	18.909	300	300	100	1	1.89
Mn	12.066	300	300	100	1	1.21
Ni	10.734	300	300	100	1	1.07
P	69.813	300	300	100	1	6.98
Pb	189.199	300	300	100	1	18.9
Sb	5.944	300	300	100	1	0.594
Se	10.084	300	300	100	1	1.01
Tl	4.900	300	300	100	1	0.490
Zn	168.337	300	300	100	1	16.8

Triangle Laboratories, Inc.
801 Capitola Drive * Durham, North Carolina 27713
Tele: (919) 544-5729 * Fax: (919) 544-5491

Printed: 05-Nov-97 at 03:46 PM

Client: Pacific Environmental Services
Project Number: 43231

Sample Report

Client Sample ID:	I-M29-1-FH
TLI Sample ID:	183-3-2B,184-23-1AB FH
Date Received:	September 12,15,& 23, 1997
Date Prepared:	Sept. 25-26 & Oct. 2-3, 1997
Date Analyzed:	October 7,8,23 & 29-30, 1997
Matrix:	Air

Analyte	Conc. (ug/L)	mL Total Vol.	mL Used	mL Final Vol.	Dilution Factor	Total ug Result
Ag	139.780	N/A	N/A	100	1	14.0
As	1920.371	N/A	N/A	100	1	192
Ba	14490.889	N/A	N/A	100	1	1450
Be	29.813	N/A	N/A	100	1	2.98
Cd	14101.715	N/A	N/A	100	1	1410
Co	341.530	N/A	N/A	100	1	34.2
Cr	12730.326	N/A	N/A	100	1	1270
Mn	850754.593	N/A	N/A	100	1	85100
Ni	3173.256	N/A	N/A	100	1	317
P	18547.696	N/A	N/A	100	1	1850
Pb	813675.023	N/A	N/A	100	1	81400
Sb	8750.900	N/A	N/A	100	1	875
Se	718.327	N/A	N/A	100	1	71.8
Tl	728.174	N/A	N/A	100	1	72.8
Zn	3929615	N/A	N/A	100	1	393000

Triangle Laboratories, Inc.
801 Capitola Drive * Durham, North Carolina 27713
Tele: (919) 544-5729 * Fax: (919) 544-5491

Printed: 07-Nov-97 at 11:03 AM

Client: Pacific Environmental Services
Project Number: 43231

Sample Report

Client Sample ID:	I-M29-1 BH
TLI Sample ID:	183-3-2C BH
Date Received:	September 12, 1997
Date Prepared:	September 25-26, 1997
Date Analyzed:	October 07-08, 1997
Matrix:	Air

Analyte	Conc. (ug/L)	mL Total Vol.	mL Used	mL Final Vol.	Dilution Factor	Total ug Result
Ag	1.084	410	310	100	1	0.143
As	-2.845	410	310	100	1	< 0.661
Ba	3.441	410	310	100	1	0.455
Be	0.143	410	310	100	1	< 0.132
Cd	3.120	410	310	100	1	0.413
Co	-4.216	410	310	100	1	< 0.132
Cr	18.734	410	310	100	1	2.48
Mn	9.917	410	310	100	1	1.31
Ni	5.882	410	310	100	1	0.778
P	110.721	410	310	100	1	14.6
Pb	24.725	410	310	100	1	3.27
Sb	5.600	410	310	100	1	0.741
Se	15.145	410	310	100	1	2.00
Tl	-0.500	410	310	100	1	< 0.265
Zn	151.166	410	310	100	1	20.0

Triangle Laboratories, Inc.
801 Capitola Drive * Durham, North Carolina 27713
Tele: (919) 544-5729 * Fax: (919) 544-5491

Printed: 05-Nov-97 at 03:46 PM

Client: **Pacific Environmental Services**
Project Number: **43231**

Sample Report

Client Sample ID:	I-M29-1 BH L
TLI Sample ID:	183-3-2C BH L
Date Received:	September 12, 1997
Date Prepared:	September 25-26, 1997
Date Analyzed:	October 07-08, 1997
Matrix:	Air

Analyte	Conc. (ug/L)	mL Total Vol.	mL Used	mL Final Vol.	Dilution Factor	Total ug Result
Ag	0.155	410	310	100	5	< 0.661
As	-0.489	410	310	100	5	< 3.31
Ba	0.685	410	310	100	5	< 1.32
Be	0.219	410	310	100	5	< 0.661
Cd	0.423	410	310	100	5	< 0.661
Co	-1.161	410	310	100	5	< 0.661
Cr	4.711	410	310	100	5	3.12
Mn	2.062	410	310	100	5	1.36
Ni	1.933	410	310	100	5	< 1.98
P	30.067	410	310	100	5	19.9
Pb	4.713	410	310	100	5	3.12
Sb	1.112	410	310	100	5	< 2.65
Se	3.517	410	310	100	5	2.33
Tl	N/A	N/A	N/A	N/A	N/A	N/A
Zn	32.230	410	310	100	5	21.3

Triangle Laboratories, Inc.
801 Capitola Drive * Durham, North Carolina 27713
Tele: (919) 544-5729 * Fax: (919) 544-5491

Printed: 05-Nov-97 at 03:46 PM

Client: **Pacific Environmental Services**
Project Number: **43231**

Sample Report

Client Sample ID:	I-M29-2-FH
TLI Sample ID:	183-3-3B,184-23-2AB FH
Date Received:	September 12,15,& 23, 1997
Date Prepared:	Sept. 25-26 & Oct. 2-3, 1997
Date Analyzed:	October 7,8,23 & 29-30, 1997
Matrix:	Air

Analyte	Conc. (ug/L)	mL Total Vol.	mL Used	mL Final Vol.	Dilution Factor	Total ug Result
Ag	553.287	N/A	N/A	100	1	55.3
As	2493.252	N/A	N/A	100	1	249
Ba	28739.289	N/A	N/A	100	1	2870
Be	153.223	N/A	N/A	100	1	15.3
Cd	37924.683	N/A	N/A	100	1	3790
Co	434.914	N/A	N/A	100	1	43.5
Cr	24508.565	N/A	N/A	100	1	2450
Mn	2095904.471	N/A	N/A	100	1	209600
Ni	4497.640	N/A	N/A	100	1	450
P	27390.498	N/A	N/A	100	1	2740
Pb	2001336.413	N/A	N/A	100	1	200100
Sb	14014.141	N/A	N/A	100	1	1400
Se	1292.630	N/A	N/A	100	1	129
Tl	1679.875	N/A	N/A	100	1	168
Zn	11191035	N/A	N/A	100	1	1119100

Triangle Laboratories, Inc.
801 Capitola Drive * Durham, North Carolina 27713
Tele: (919) 544-5729 * Fax: (919) 544-5491

Printed: 07-Nov-97 at 11:03 AM

Client: **Pacific Environmental Services**
Project Number: **43231**

Sample Report

Client Sample ID:	I-M29-2 BH
TLI Sample ID:	183-3-3C BH
Date Received:	September 12, 1997
Date Prepared:	September 25-26, 1997
Date Analyzed:	October 07-08, 1997
Matrix:	Air

Analyte	Conc. (ug/L)	mL Total Vol.	mL Used	mL Final Vol.	Dilution Factor	Total ug Result
Ag	1.419	460	360	100	1	0.181
As	-4.446	460	360	100	1	< 0.639
Ba	15.256	460	360	100	1	1.95
Be	0.105	460	360	100	1	< 0.128
Cd	1.109	460	360	100	1	0.142
Co	-2.508	460	360	100	1	< 0.128
Cr	18.795	460	360	100	1	2.40
Mn	78.280	460	360	100	1	10.0
Ni	3.754	460	360	100	1	0.480
P	121.730	460	360	100	1	15.6
Pb	95.221	460	360	100	1	12.2
Sb	2.873	460	360	100	1	< 0.511
Se	6.414	460	360	100	1	0.820
Tl	-0.400	460	360	100	1	< 0.256
Zn	459.381	460	360	100	1	58.7

Triangle Laboratories, Inc.
801 Capitola Drive * Durham, North Carolina 27713
Tele: (919) 544-5729 * Fax: (919) 544-5491

Printed: 05-Nov-97 at 03:46 PM

Client: **Pacific Environmental Services**
Project Number: **43231**

Sample Report

Client Sample ID:	I-M29-2 BH DA
TLI Sample ID:	183-3-3C BH DA
Date Received:	September 12, 1997
Date Prepared:	September 25-26, 1997
Date Analyzed:	October 07-08, 1997
Matrix:	Air

Analyte	Conc. (ug/L)	mL Total Vol.	mL Used	mL Final Vol.	Dilution Factor	Total ug Result
Ag	1.515	460	360	100	1	0.194
As	-4.545	460	360	100	1	< 0.639
Ba	15.177	460	360	100	1	1.94
Be	0.094	460	360	100	1	< 0.128
Cd	1.225	460	360	100	1	0.157
Co	-1.929	460	360	100	1	< 0.128
Cr	17.896	460	360	100	1	2.29
Mn	78.199	460	360	100	1	9.99
Ni	2.658	460	360	100	1	< 0.383
P	129.406	460	360	100	1	16.5
Pb	96.231	460	360	100	1	12.3
Sb	3.852	460	360	100	1	< 0.511
Se	5.137	460	360	100	1	0.656
Tl	N/A	N/A	N/A	N/A	N/A	N/A
Zn	459.230	460	360	100	1	58.7

Triangle Laboratories, Inc.
801 Capitola Drive * Durham, North Carolina 27713
Tele: (919) 544-5729 * Fax: (919) 544-5491

Printed: 05-Nov-97 at 03:46 PM

Client: **Pacific Environmental Services**
Project Number: **43231**

Sample Report

Client Sample ID:	I-M29-3-FH
TLI Sample ID:	183-3-4B,184-23-3AB FH
Date Received:	September 12,15,& 23, 1997
Date Prepared:	Sept. 25-26 & Oct. 2-3, 1997
Date Analyzed:	October 7,8,23 & 29-30, 1997
Matrix:	Air

Analyte	Conc. (ug/L)	mL Total Vol.	mL Used	mL Final Vol.	Dilution Factor	Total ug Result
Ag	196.154	N/A	N/A	100	1	19.6
As	3144.309	N/A	N/A	100	1	314
Ba	25008.222	N/A	N/A	100	1	2500
Be	91.076	N/A	N/A	100	1	9.11
Cd	30130.599	N/A	N/A	100	1	3010
Co	472.671	N/A	N/A	100	1	47.3
Cr	20380.124	N/A	N/A	100	1	2040
Mn	1658612.349	N/A	N/A	100	1	165900
Ni	4995.930	N/A	N/A	100	1	500
P	612397.537	N/A	N/A	100	1	61200
Pb	1479459.811	N/A	N/A	100	1	147900
Sb	12947.981	N/A	N/A	100	1	1290
Se	1164.243	N/A	N/A	100	1	116
Tl	1308.620	N/A	N/A	100	1	131
Zn	7750554.077	N/A	N/A	100	1	775100

Triangle Laboratories, Inc.
801 Capitola Drive * Durham, North Carolina 27713
Tele: (919) 544-5729 * Fax: (919) 544-5491

Printed: 07-Nov-97 at 11:03 AM

Client: **Pacific Environmental Services**
Project Number: **43231**

Sample Report

Client Sample ID:	I-M29-3 BH
TLI Sample ID:	183-3-4C BH
Date Received:	September 12, 1997
Date Prepared:	September 25-26, 1997
Date Analyzed:	October 07-08, 1997
Matrix:	Air

Analyte	Conc. (ug/L)	mL Total Vol.	mL Used	mL Final Vol.	Dilution Factor	Total ug Result
Ag	2.964	340	240	100	1	0.420
As	-2.307	340	240	100	1	< 0.708
Ba	7.222	340	240	100	1	1.02
Be	0.205	340	240	100	1	< 0.142
Cd	13.109	340	240	100	1	1.86
Co	-2.251	340	240	100	1	< 0.142
Cr	13.070	340	240	100	1	1.85
Mn	640.411	340	240	100	1	90.7
Ni	1.556	340	240	100	1	< 0.425
P	131.117	340	240	100	1	18.6
Pb	483.027	340	240	100	1	68.4
Sb	4.079	340	240	100	1	0.578
Se	4.593	340	240	100	1	0.651
Tl	-0.600	340	240	100	1	< 0.283
Zn	2403.785	340	240	100	1	341

Triangle Laboratories, Inc.
801 Capitola Drive * Durham, North Carolina 27713
Tele: (919) 544-5729 * Fax: (919) 544-5491

Printed: 05-Nov-97 at 03:46 PM

Client: **Pacific Environmental Services**
Project Number: **43231**

Sample Report

Client Sample ID:	O-M29-FHAR,FIELD BLANK FH
TLI Sample ID:	183-3-5B,184-23-9AB FH
Date Received:	September 12,15,& 23, 1997
Date Prepared:	Sept. 25-26 & Oct. 2-3, 1997
Date Analyzed:	October 7,8,23 & 29-30, 1997
Matrix:	Air

Analyte	Conc. (ug/L)	mL Total Vol.	mL Used	mL Final Vol.	Dilution Factor	Total ug Result
Ag	1.896	N/A	N/A	100	1	0.190
As	15.110	N/A	N/A	100	1	1.51
Ba	624.604	N/A	N/A	100	1	62.5
Be	-1.061	N/A	N/A	100	1	< 0.100
Cd	-6.678	N/A	N/A	100	1	< 0.100
Co	-23.922	N/A	N/A	100	1	< 0.100
Cr	103.044	N/A	N/A	100	1	10.3
Mn	38.387	N/A	N/A	100	1	3.84
Ni	66.402	N/A	N/A	100	1	6.64
P	786.693	N/A	N/A	100	1	78.7
Pb	9.729	N/A	N/A	100	1	0.973
Sb	67.715	N/A	N/A	100	1	6.77
Se	57.674	N/A	N/A	100	1	5.77
Tl	0.400	N/A	N/A	100	1	< 0.200
Zn	113.068	N/A	N/A	100	1	11.3

Triangle Laboratories, Inc.
801 Capitola Drive * Durham, North Carolina 27713
Tele: (919) 544-5729 * Fax: (919) 544-5491

Printed: 07-Nov-97 at 11:03 AM

Client: **Pacific Environmental Services**
Project Number: **43231**

Sample Report

Client Sample ID:	O-M29-FHAR,BLK BH
TLI Sample ID:	183-3-5BC BH
Date Received:	September 12, 1997
Date Prepared:	September 25-26, 1997
Date Analyzed:	October 07-08, 1997
Matrix:	Air

Analyte	Conc. (ug/L)	mL Total Vol.	mL Used	mL Final Vol.	Dilution Factor	Total ug Result
Ag	0.446	150	150	100	1	< 0.100
As	-2.903	150	150	100	1	< 0.500
Ba	2.443	150	150	100	1	0.244
Be	-0.668	150	150	100	1	< 0.100
Cd	1.853	150	150	100	1	0.185
Co	-1.064	150	150	100	1	< 0.100
Cr	4.299	150	150	100	1	0.430
Mn	9.713	150	150	100	1	0.971
Ni	-0.887	150	150	100	1	< 0.300
P	45.672	150	150	100	1	4.57
Pb	21.074	150	150	100	1	2.11
Sb	0.429	150	150	100	1	< 0.400
Se	12.213	150	150	100	1	1.22
Tl	1.200	150	150	100	1	< 0.200
Zn	119.933	150	150	100	1	12.0

Triangle Laboratories, Inc.
801 Capitola Drive * Durham, North Carolina 27713
Tele: (919) 544-5729 * Fax: (919) 544-5491

Printed: 05-Nov-97 at 03:46 PM

Client: **Pacific Environmental Services**
Project Number: **43231**

Sample Report

Client Sample ID:	O-M29-1 FH
TLI Sample ID:	183-3-6B,184-23-6AB FH
Date Received:	September 12,15,& 23, 1997
Date Prepared:	Sept. 25-26 & Oct. 2-3, 1997
Date Analyzed:	October 7,8,23 & 29-30, 1997
Matrix:	Air

Analyte	Conc. (ug/L)	mL Total Vol.	mL Used	mL Final Vol.	Dilution Factor	Total ug Result
Ag	3.703	N/A	N/A	100	1	0.370
As	9.119	N/A	N/A	100	1	0.912
Ba	649.382	N/A	N/A	100	1	64.9
Be	-1.231	N/A	N/A	100	1	< 0.100
Cd	366.037	N/A	N/A	100	1	36.6
Co	-24.978	N/A	N/A	100	1	< 0.100
Cr	109.230	N/A	N/A	100	1	10.9
Mn	423.582	N/A	N/A	100	1	42.4
Ni	76.189	N/A	N/A	100	1	7.62
P	905.584	N/A	N/A	100	1	90.6
Pb	2030.900	N/A	N/A	100	1	203
Sb	54.727	N/A	N/A	100	1	5.47
Se	52.014	N/A	N/A	100	1	5.20
Tl	-37.404	N/A	N/A	100	1	< 0.500
Zn	1624.963	N/A	N/A	100	1	162

Triangle Laboratories, Inc.
801 Capitola Drive * Durham, North Carolina 27713
Tele: (919) 544-5729 * Fax: (919) 544-5491

Printed: 07-Nov-97 at 11:03 AM

Client: Pacific Environmental Services
Project Number: 43231

Sample Report

Client Sample ID:	O-M29-1-BH
TLI Sample ID:	183-3-6C BH
Date Received:	September 12, 1997
Date Prepared:	September 25-26, 1997
Date Analyzed:	October 07-08, 1997
Matrix:	Air

Analyte	Conc. (ug/L)	mL Total Vol.	mL Used	mL Final Vol.	Dilution Factor	Total ug Result
Ag	0.746	350	250	100	1	< 0.140
As	-3.814	350	250	100	1	< 0.700
Ba	3.063	350	250	100	1	0.429
Be	-0.741	350	250	100	1	< 0.140
Cd	1.053	350	250	100	1	0.147
Co	-1.179	350	250	100	1	< 0.140
Cr	7.699	350	250	100	1	1.08
Mn	7.149	350	250	100	1	1.00
Ni	0.262	350	250	100	1	< 0.420
P	86.705	350	250	100	1	12.1
Pb	16.764	350	250	100	1	2.35
Sb	1.291	350	250	100	1	< 0.560
Se	0.753	350	250	100	1	< 0.420
Tl	0.200	350	250	100	1	< 0.280
Zn	119.197	350	250	100	1	16.7

Triangle Laboratories, Inc.
801 Capitola Drive * Durham, North Carolina 27713
Tele: (919) 544-5729 * Fax: (919) 544-5491

Printed: 05-Nov-97 at 03:46 PM

Client: **Pacific Environmental Services**
Project Number: **43231**

Sample Report

Client Sample ID:	O-M29-2 FH
TLI Sample ID:	183-3-7B,184-23-7AB FH
Date Received:	September 12,15,& 23, 1997
Date Prepared:	Sept. 25-26 & Oct. 2-3, 1997
Date Analyzed:	October 7,8,23 & 29-30, 1997
Matrix:	Air

Analyte	Conc. (ug/L)	mL Total Vol.	mL Used	mL Final Vol.	Dilution Factor	Total ug Result
Ag	3.501	N/A	N/A	100	1	0.350
As	13.670	N/A	N/A	100	1	1.37
Ba	642.973	N/A	N/A	100	1	64.3
Be	-1.212	N/A	N/A	100	1	< 0.100
Cd	28.767	N/A	N/A	100	1	2.88
Co	-25.876	N/A	N/A	100	1	< 0.100
Cr	104.158	N/A	N/A	100	1	10.4
Mn	607.453	N/A	N/A	100	1	60.7
Ni	70.914	N/A	N/A	100	1	7.09
P	840.952	N/A	N/A	100	1	84.1
Pb	571.782	N/A	N/A	100	1	57.2
Sb	59.941	N/A	N/A	100	1	5.99
Se	52.777	N/A	N/A	100	1	5.28
Tl	0.400	N/A	N/A	100	1	< 0.200
Zn	2650.503	N/A	N/A	100	1	265

Triangle Laboratories, Inc.
801 Capitola Drive * Durham, North Carolina 27713
Tele: (919) 544-5729 * Fax: (919) 544-5491

Printed: 07-Nov-97 at 11:03 AM

Client: Pacific Environmental Services
Project Number: 43231

Sample Report

Client Sample ID:	O-M29-2-BH
TLI Sample ID:	183-3-7C BH
Date Received:	September 12, 1997
Date Prepared:	September 25-26, 1997
Date Analyzed:	October 07-08, 1997
Matrix:	Air

Analyte	Conc. (ug/L)	mL Total Vol.	mL Used	mL Final Vol.	Dilution Factor	Total ug Result
Ag	0.932	360	260	100	1	< 0.138
As	-3.666	360	260	100	1	< 0.692
Ba	7.064	360	260	100	1	0.978
Be	-0.844	360	260	100	1	< 0.138
Cd	0.894	360	260	100	1	< 0.138
Co	-0.770	360	260	100	1	< 0.138
Cr	9.822	360	260	100	1	1.36
Mn	8.633	360	260	100	1	1.20
Ni	1.456	360	260	100	1	< 0.415
P	107.632	360	260	100	1	14.9
Pb	21.368	360	260	100	1	2.96
Sb	0.215	360	260	100	1	< 0.554
Se	14.199	360	260	100	1	1.97
Tl	-0.600	360	260	100	1	< 0.277
Zn	154.895	360	260	100	1	21.4

Triangle Laboratories, Inc.
801 Capitola Drive * Durham, North Carolina 27713
Tele: (919) 544-5729 * Fax: (919) 544-5491

Printed: 05-Nov-97 at 03:46 PM

Client: **Pacific Environmental Services**
Project Number: **43231**

Sample Report

Client Sample ID:	O-M29-3 FH
TLI Sample ID:	183-3-8B,184-23-8AB FH
Date Received:	September 12,15,& 23, 1997
Date Prepared:	Sept. 25-26 & Oct. 2-3, 1997
Date Analyzed:	October 7,8,23 & 29-30, 1997
Matrix:	Air

Analyte	Conc. (ug/L)	mL Total Vol.	mL Used	mL Final Vol.	Dilution Factor	Total ug Result
Ag	18.713	N/A	N/A	100	1	1.87
As	15.336	N/A	N/A	100	1	1.53
Ba	684.966	N/A	N/A	100	1	68.5
Be	-1.286	N/A	N/A	100	1	< 0.100
Cd	106.184	N/A	N/A	100	1	10.6
Co	-27.120	N/A	N/A	100	1	< 0.100
Cr	128.152	N/A	N/A	100	1	12.8
Mn	1091.099	N/A	N/A	100	1	109
Ni	77.154	N/A	N/A	100	1	7.72
P	708.075	N/A	N/A	100	1	70.8
Pb	1129.659	N/A	N/A	100	1	113
Sb	69.080	N/A	N/A	100	1	6.91
Se	60.821	N/A	N/A	100	1	6.08
Tl	-37.498	N/A	N/A	100	1	< 0.500
Zn	7442.587	N/A	N/A	100	1	744

Triangle Laboratories, Inc.
801 Capitola Drive * Durham, North Carolina 27713
Tele: (919) 544-5729 * Fax: (919) 544-5491

Printed: 07-Nov-97 at 11:03 AM

Client: **Pacific Environmental Services**
Project Number: **43231**

Sample Report

Client Sample ID:	O-M29-3.BH
TLI Sample ID:	183-3-8C BH
Date Received:	September 12, 1997
Date Prepared:	September 25-26, 1997
Date Analyzed:	October 07-08, 1997
Matrix:	Air

Analyte	Conc. (ug/L)	mL Total Vol.	mL Used	mL Final Vol.	Dilution Factor	Total ug Result
Ag	0.525	370	270	100	1	< 0.137
As	-3.138	370	270	100	1	< 0.685
Ba	3.658	370	270	100	1	0.501
Be	-0.805	370	270	100	1	< 0.137
Cd	0.663	370	270	100	1	< 0.137
Co	-1.302	370	270	100	1	< 0.137
Cr	8.300	370	270	100	1	1.14
Mn	16.366	370	270	100	1	2.24
Ni	8.018	370	270	100	1	1.10
P	111.483	370	270	100	1	15.3
Pb	24.246	370	270	100	1	3.32
Sb	-0.608	370	270	100	1	< 0.548
Se	1.416	370	270	100	1	< 0.411
Tl	0.800	370	270	100	1	< 0.274
Zn	143.887	370	270	100	1	19.7

Triangle Laboratories, Inc.
801 Capitola Drive * Durham, North Carolina 27713
Tele: (919) 544-5729 * Fax: (919) 544-5491

Printed: 05-Nov-97 at 03:46 PM

Client: **Pacific Environmental Services**
Project Number: **43231**

Sample Report

Client Sample ID:	I,O-M29-REAGENT BLANK FH
TLI Sample ID:	184-23-10AB,5,183-15-1B FH
Date Received:	September 15 & 23, 1997
Date Prepared:	October 02-06, 1997
Date Analyzed:	October 07-08, 1997
Matrix:	Air

Analyte	Conc. (ug/L)	mL Total Vol.	mL Used	mL Final Vol.	Dilution Factor	Total ug Result
Ag	3.105	N/A	N/A	100	1	0.311
As	33.470	N/A	N/A	100	1	3.35
Ba	1035.234	N/A	N/A	100	1	104
Be	-55.530	N/A	N/A	100	1	< 0.100
Cd	-6.706	N/A	N/A	100	1	< 0.100
Co	27.753	N/A	N/A	100	1	2.78
Cr	402.853	N/A	N/A	100	1	40.3
Mn	239.746	N/A	N/A	100	1	24.0
Ni	158.144	N/A	N/A	100	1	15.8
P	788.062	N/A	N/A	100	1	78.8
Pb	57.982	N/A	N/A	100	1	5.80
Sb	69.894	N/A	N/A	100	1	6.99
Se	60.905	N/A	N/A	100	1	6.09
Tl	0.700	N/A	N/A	100	1	< 0.200
Zn	564.608	N/A	N/A	100	1	56.5

Triangle Laboratories, Inc.
801 Capitola Drive * Durham, North Carolina 27713
Tele: (919) 544-5729 * Fax: (919) 544-5491

Printed: 03-Nov-97 at 04:56 PM

Client: **Pacific Environmental Services**
Project Number: **43231**

Sample Report

Client Sample ID:	REAGENT BLANK BH
TLI Sample ID:	183-15-1BD BH
Date Received:	September 15 & 23, 1997
Date Prepared:	October 02-06, 1997
Date Analyzed:	October 07-08, 1997
Matrix:	Air

Analyte	Conc. (ug/L)	mL Total Vol.	mL Used	mL Final Vol.	Dilution Factor	Total ug Result
Ag	1.186	300	300	100	1	0.119
As	-4.801	300	300	100	1	< 0.500
Ba	4.324	300	300	100	1	0.432
Be	-0.986	300	300	100	1	< 0.100
Cd	-1.092	300	300	100	1	< 0.100
Co	-4.620	300	300	100	1	< 0.100
Cr	17.917	300	300	100	1	1.79
Mn	6.018	300	300	100	1	0.602
Ni	5.207	300	300	100	1	0.521
P	126.393	300	300	100	1	12.6
Pb	9.672	300	300	100	1	0.967
Sb	8.746	300	300	100	1	0.875
Se	6.364	300	300	100	1	0.636
Tl	0.900	300	300	100	1	< 0.200
Zn	126.992	300	300	100	1	12.7

Triangle Laboratories, Inc.
801 Capitola Drive * Durham, North Carolina 27713
Tele: (919) 544-5729 * Fax: (919) 544-5491

Printed: 03-Nov-97 at 04:56 PM

Client: **Pacific Environmental Services**
Project Number: **43231**

Sample Report

Client Sample ID:	REAGENT BLANK DI H2O
TLI Sample ID:	183-15-1C
Date Received:	September 15 & 23, 1997
Date Prepared:	October 02-06, 1997
Date Analyzed:	October 07-08, 1997
Matrix:	Air

Analyte	Conc. (ug/L)	mL Total Vol.	mL Used	mL Final Vol.	Dilution Factor	Total ug Result
Ag	0.571	345	345	100	1	< 0.100
As	7.872	345	345	100	1	0.787
Ba	3.212	345	345	100	1	0.321
Be	-1.241	345	345	100	1	< 0.100
Cd	-0.896	345	345	100	1	< 0.100
Co	-3.361	345	345	100	1	< 0.100
Cr	13.983	345	345	100	1	1.40
Mn	3.676	345	345	100	1	0.368
Ni	8.472	345	345	100	1	0.847
P	2.904	345	345	100	1	< 3.00
Pb	0.432	345	345	100	1	< 0.200
Sb	4.816	345	345	100	1	0.482
Se	8.973	345	345	100	1	0.897
Tl	0.300	345	345	100	1	< 0.200
Zn	12.314	345	345	100	1	1.23

Triangle Laboratories, Inc.
801 Capitola Drive * Durham, North Carolina 27713
Tele: (919) 544-5729 * Fax: (919) 544-5491

Printed: 03-Nov-97 at 04:56 PM

Client: **Pacific Environmental Services**
Project Number: **43231**

Sample Report

Client Sample ID:	I-M29-2 FH
TLI Sample ID:	184-23-2AB FH
Date Received:	September 23, 1997
Date Prepared:	October 02-03, 1997
Date Analyzed:	October 07,08,23 & 30, 1997
Matrix:	Air

Analyte	Conc. (ug/L)	mL Total Vol.	mL Used	mL Final Vol.	Dilution Factor	Total ug Result
Ag	50.281	N/A	N/A	100	10	50.3
As	12.318	N/A	N/A	100	200	246
Ba	142.334	N/A	N/A	100	200	2850
Be	15.175	N/A	N/A	100	10	15.2
Cd	188.129	N/A	N/A	100	200	3760
Co	42.981	N/A	N/A	100	10	43.0
Cr	121.771	N/A	N/A	100	200	2440
Mn	10416.737	N/A	N/A	100	200	208300
Ni	22.231	N/A	N/A	100	200	445
P	134.852	N/A	N/A	100	200	2700
Pb	9932.204	N/A	N/A	100	200	198600
Sb	69.541	N/A	N/A	100	200	1390
Se	127.382	N/A	N/A	100	10	127
Tl	167.678	N/A	N/A	100	10	168
Zn	55531.383	N/A	N/A	100	200	1110600

Triangle Laboratories, Inc.
801 Capitola Drive * Durham, North Carolina 27713
Tele: (919) 544-5729 * Fax: (919) 544-5491

Printed: 30-Oct-97 at 02:18 PM

Client: **Pacific Environmental Services**
Project Number: **43231**

Sample Report

Client Sample ID:	I-M29-2 FH L
TLI Sample ID:	184-23-2AB FH L
Date Received:	September 23, 1997
Date Prepared:	October 02-03, 1997
Date Analyzed:	October 07,08,23 & 30, 1997
Matrix:	Air

Analyte	Conc. (ug/L)	mL Total Vol.	mL Used	mL Final Vol.	Dilution Factor	Total ug Result
Ag	8.408	N/A	N/A	100	50	42.0
As	6.008	N/A	N/A	100	1000	601
Ba	29.303	N/A	N/A	100	1000	2930
Be	3.464	N/A	N/A	100	50	17.3
Cd	39.491	N/A	N/A	100	1000	3950
Co	9.450	N/A	N/A	100	50	47.2
Cr	24.930	N/A	N/A	100	1000	2490
Mn	2214.038	N/A	N/A	100	1000	221400
Ni	5.732	N/A	N/A	100	1000	573
P	33.613	N/A	N/A	100	1000	3360
Pb	2068.697	N/A	N/A	100	1000	206900
Sb	15.781	N/A	N/A	100	1000	1580
Se	25.069	N/A	N/A	100	50	125
Tl	35.641	N/A	N/A	100	50	178
Zn	12158.620	N/A	N/A	100	1000	1215900

Triangle Laboratories, Inc.
801 Capitola Drive * Durham, North Carolina 27713
Tele: (919) 544-5729 * Fax: (919) 544-5491

Printed: 30-Oct-97 at 02:18 PM

Client: **Pacific Environmental Services**
Project Number: **43231**

Sample Report

Client Sample ID:	I-M29-1 FH
TLI Sample ID:	183-3-2B FH
Date Received:	September 12, 1997
Date Prepared:	September 25-26, 1997
Date Analyzed:	October 07-08, 1997
Matrix:	Air

Analyte	Conc. (ug/L)	mL Total Vol.	mL Used	mL Final Vol.	Dilution Factor	Total ug Result
Ag	10.576	N/A	N/A	100	1	1.06
As	7.435	N/A	N/A	100	1	0.744
Ba	51.465	N/A	N/A	100	1	5.15
Be	0.333	N/A	N/A	100	1	< 0.100
Cd	28.573	N/A	N/A	100	1	2.86
Co	-1.725	N/A	N/A	100	1	< 0.100
Cr	41.404	N/A	N/A	100	1	4.14
Mn	1584.477	N/A	N/A	100	1	158
Ni	50.418	N/A	N/A	100	1	5.04
P	105.556	N/A	N/A	100	1	10.6
Pb	1913.501	N/A	N/A	100	1	191
Sb	23.734	N/A	N/A	100	1	2.37
Se	8.559	N/A	N/A	100	1	0.856
Tl	1.400	N/A	N/A	100	1	< 0.200
Zn	11375.923	N/A	N/A	100	1	1140

Triangle Laboratories, Inc.
801 Capitola Drive * Durham, North Carolina 27713
Tele: (919) 544-5729 * Fax: (919) 544-5491

Printed: 05-Nov-97 at 03:46 PM

Client: **Pacific Environmental Services**
Project Number: **43231**

Sample Report

Client Sample ID:	I-M29-1 FH L
TLI Sample ID:	183-3-2B FH L
Date Received:	September 12, 1997
Date Prepared:	September 25-26, 1997
Date Analyzed:	October 07-08, 1997
Matrix:	Air

Analyte	Conc. (ug/L)	mL Total Vol.	mL Used	mL Final Vol.	Dilution Factor	Total ug Result
Ag	2.246	N/A	N/A	100	5	1.12
As	2.140	N/A	N/A	100	5	< 2.50
Ba	10.543	N/A	N/A	100	5	5.27
Be	0.322	N/A	N/A	100	5	< 0.500
Cd	5.654	N/A	N/A	100	5	2.83
Co	-1.100	N/A	N/A	100	5	< 0.500
Cr	12.646	N/A	N/A	100	5	6.32
Mn	327.553	N/A	N/A	100	5	164
Ni	12.882	N/A	N/A	100	5	6.44
P	31.588	N/A	N/A	100	5	15.8
Pb	402.233	N/A	N/A	100	5	201
Sb	8.209	N/A	N/A	100	5	4.10
Se	3.531	N/A	N/A	100	5	1.77
Tl	N/A	N/A	N/A	N/A	N/A	N/A
Zn	2409.756	N/A	N/A	100	5	1200

Triangle Laboratories, Inc.
801 Capitola Drive * Durham, North Carolina 27713
Tele: (919) 544-5729 * Fax: (919) 544-5491

Printed: 05-Nov-97 at 03:46 PM

Client: **Pacific Environmental Services**
Project Number: **43231**

Sample Report

Client Sample ID:	I-M29-3 FH
TLI Sample ID:	184-23-3AB FH
Date Received:	September 23, 1997
Date Prepared:	October 02-03, 1997
Date Analyzed:	October 07,08,23 & 30, 1997
Matrix:	Air

Analyte	Conc. (ug/L)	mL Total Vol.	mL Used	mL Final Vol.	Dilution Factor	Total ug Result
Ag	18.897	N/A	N/A	100	10	18.9
As	15.679	N/A	N/A	100	200	314
Ba	124.801	N/A	N/A	100	200	2500
Be	9.108	N/A	N/A	100	10	9.11
Cd	150.528	N/A	N/A	100	200	3010
Co	47.267	N/A	N/A	100	10	47.3
Cr	101.748	N/A	N/A	100	200	2030
Mn	8285.539	N/A	N/A	100	200	165700
Ni	24.911	N/A	N/A	100	200	498
P	3054.165	N/A	N/A	100	200	61100
Pb	7389.845	N/A	N/A	100	200	147800
Sb	64.666	N/A	N/A	100	200	1290
Se	115.553	N/A	N/A	100	10	116
Tl	130.862	N/A	N/A	100	10	131
Zn	38710.043	N/A	N/A	100	200	774200

Triangle Laboratories, Inc.
801 Capitola Drive * Durham, North Carolina 27713
Tele: (919) 544-5729 * Fax: (919) 544-5491

Printed: 30-Oct-97 at 02:18 PM

Client: **Pacific Environmental Services**
Project Number: **43231**

Sample Report

Client Sample ID:	I-M29-3 FH DA
TLI Sample ID:	184-23-3AB FH DA
Date Received:	September 23, 1997
Date Prepared:	October 02-03, 1997
Date Analyzed:	October 07,08,23 & 30, 1997
Matrix:	Air

Analyte	Conc. (ug/L)	mL Total Vol.	mL Used	mL Final Vol.	Dilution Factor	Total ug Result
Ag	18.883	N/A	N/A	100	10	18.9
As	17.302	N/A	N/A	100	200	346
Ba	127.045	N/A	N/A	100	200	2540
Be	9.051	N/A	N/A	100	10	9.05
Cd	153.500	N/A	N/A	100	200	3070
Co	47.701	N/A	N/A	100	10	47.7
Cr	104.130	N/A	N/A	100	200	2080
Mn	8429.759	N/A	N/A	100	200	168600
Ni	25.631	N/A	N/A	100	200	513
P	3137.046	N/A	N/A	100	200	62700
Pb	7544.282	N/A	N/A	100	200	150900
Sb	68.209	N/A	N/A	100	200	1360
Se	116.150	N/A	N/A	100	10	116
Tl	139.193	N/A	N/A	100	10	139
Zn	39478.926	N/A	N/A	100	200	789600

Triangle Laboratories, Inc.
801 Capitola Drive * Durham, North Carolina 27713
Tele: (919) 544-5729 * Fax: (919) 544-5491

Printed: 30-Oct-97 at 02:18 PM

Client: **Pacific Environmental Services**
Project Number: **43231**

Sample Report

Client Sample ID:	I-M29-2 FH
TLI Sample ID:	183-3-3B FH
Date Received:	September 12, 1997
Date Prepared:	September 25-26, 1997
Date Analyzed:	October 07-08, 1997
Matrix:	Air

Analyte	Conc. (ug/L)	mL Total Vol.	mL Used	mL Final Vol.	Dilution Factor	Total ug Result
Ag	50.476	N/A	N/A	100	1	5.05
As	29.564	N/A	N/A	100	1	2.96
Ba	272.481	N/A	N/A	100	1	27.2
Be	1.477	N/A	N/A	100	1	0.148
Cd	298.885	N/A	N/A	100	1	29.9
Co	5.101	N/A	N/A	100	1	0.510
Cr	154.455	N/A	N/A	100	1	15.4
Mn	12557.011	N/A	N/A	100	1	1260
Ni	51.422	N/A	N/A	100	1	5.14
P	420.150	N/A	N/A	100	1	42.0
Pb	14895.593	N/A	N/A	100	1	1490
Sb	105.889	N/A	N/A	100	1	10.6
Se	18.809	N/A	N/A	100	1	1.88
Tl	3.100	N/A	N/A	100	1	0.310
Zn	1695.179	N/A	N/A	100	50	8480

Triangle Laboratories, Inc.
801 Capitola Drive * Durham, North Carolina 27713
Tele: (919) 544-5729 * Fax: (919) 544-5491

Printed: 05-Nov-97 at 03:46 PM

Client: **Pacific Environmental Services**
Project Number: **43231**

Sample Report

Client Sample ID:	I-M29-2 FH DA
TLI Sample ID:	183-3-3B FH DA
Date Received:	September 12, 1997
Date Prepared:	September 25-26, 1997
Date Analyzed:	October 07-08, 1997
Matrix:	Air

Analyte	Conc. (ug/L)	mL Total Vol.	mL Used	mL Final Vol.	Dilution Factor	Total ug Result
Ag	50.490	N/A	N/A	100	1	5.05
As	33.608	N/A	N/A	100	1	3.36
Ba	273.639	N/A	N/A	100	1	27.4
Be	1.475	N/A	N/A	100	1	0.148
Cd	298.801	N/A	N/A	100	1	29.9
Co	4.991	N/A	N/A	100	1	0.499
Cr	155.185	N/A	N/A	100	1	15.5
Mn	12519.816	N/A	N/A	100	1	1250
Ni	52.033	N/A	N/A	100	1	5.20
P	425.212	N/A	N/A	100	1	42.5
Pb	14905.329	N/A	N/A	100	1	1490
Sb	106.854	N/A	N/A	100	1	10.7
Se	18.289	N/A	N/A	100	1	1.83
Tl	N/A	N/A	N/A	N/A	N/A	N/A
Zn	1701.079	N/A	N/A	100	50	8510

Triangle Laboratories, Inc.
801 Capitola Drive * Durham, North Carolina 27713
Tele: (919) 544-5729 * Fax: (919) 544-5491

Printed: 05-Nov-97 at 03:46 PM

Client: **Pacific Environmental Services**
Project Number: 43231

QA: Serial Dilution

Client Sample ID:	I-M29-1 FH	I-M29-1 FH L
TLI Sample ID:	183-3-2B FH	183-3-2B FH L
Date Prepared:	September 25-26, 1997	September 25-26, 1997
Date Analyzed:	October 07-08, 1997	October 07-08, 1997
Matrix:	Air	Air

	Native Sample		Serial Dilution		
Analyte	Total ug Result	ug/L Conc.	Total ug Result	ug/L Conc.	RPD
Ag	1.06	10.576	1.12	2.246	<RDL
As	0.744	7.435	< 2.50	2.140	<RDL
Ba	5.15	51.465	5.27	10.543	<RDL
Be	< 0.100	0.333	< 0.500	0.322	<RDL
Cd	2.86	28.573	2.83	5.654	<RDL
Co	< 0.100	-1.725	< 0.500	-1.100	<RDL
Cr	4.14	41.404	6.32	12.646	<RDL
Mn	158	1584.477	164	327.553	3.73%
Ni	5.04	50.418	6.44	12.882	<RDL
P	10.6	105.556	15.8	31.588	<RDL
Pb	191	1913.501	201	402.233	5.10%
Sb	2.37	23.734	4.10	8.209	<RDL
Se	0.856	8.559	1.77	3.531	<RDL
Tl	< 0.200	1.400	N/A	N/A	N/A
Zn	1140	11375.923	1200	2409.756	5.13%
					—
					—
					—
					—
					—
					—
					—
					—
					—
					—
					—
					—
					—
					—
					—
					—

Triangle Laboratories, Inc.
801 Capitola Drive * Durham, NC 27713
Tele: (919) 544-5729 * Fax: (919) 544-5491

Pr 05-Nov-97 at 03:48 PM

Client: **Pacific Environmental Services**
Project Number: 43231

QA: Serial Dilution

Client Sample ID:	I-M29-2 FH	I-M29-2 FH L
TLI Sample ID:	184-23-2AB FH	184-23-2AB FH L
Date Prepared:	October 02-03, 1997	October 02-03, 1997
Date Analyzed:	October 07,08,23 & 30, 1997	October 07,08,23 & 30, 1997
Matrix:	Air	Air

	Native Sample		Serial Dilution		
Analyte	Total ug Result	ug/L Conc.	Total ug Result	ug/L Conc.	RPD
Ag	50.3	50.281	42.0	8.408	<RDL
As	246	12.318	601	6.008	<RDL
Ba	2850	142.334	2930	29.303	2.77%
Be	15.2	15.175	17.3	3.464	<RDL
Cd	3760	188.129	3950	39.491	4.93%
Co	43.0	42.981	47.2	9.450	<RDL
Cr	2440	121.771	2490	24.930	2.03%
Mn	208300	10416.737	221400	2214.038	6.10%
Ni	445	22.231	573	5.732	<RDL
P	2700	134.852	3360	33.613	<RDL
Pb	198600	9932.204	206900	2068.697	4.09%
Sb	1390	69.541	1580	15.781	<RDL
Se	127	127.382	125	25.069	<RDL
Tl	168	167.678	178	35.641	<RDL
Zn	1110600	55531.383	1215900	12158.620	9.05%

Triangle Laboratories, Inc.
801 Capitola Drive * Durham, NC 27713
Tele: (919) 544-5729 * Fax: (919) 544-5491

Pr 30-Oct-97 at 02:18 PM

Client: **Pacific Environmental Services**
Project Number: 43231

QA: Serial Dilution

Client Sample ID:	I-M29-1 BH	I-M29-1 BH L
TLI Sample ID:	183-3-2C BH	183-3-2C BH L
Date Prepared:	September 25-26, 1997	September 25-26, 1997
Date Analyzed:	October 07-08, 1997	October 07-08, 1997
Matrix:	Air	Air

	Native Sample		Serial Dilution		
Analyte	Total ug Result	ug/L Conc.	Total ug Result	ug/L Conc.	RPD
Ag	0.143	1.084	< 0.661	0.155	<RDL
As	< 0.661	-2.845	< 3.31	-0.489	<RDL
Ba	0.455	3.441	< 1.32	0.685	<RDL
Be	< 0.132	0.143	< 0.661	0.219	<RDL
Cd	0.413	3.120	< 0.661	0.423	<RDL
Co	< 0.132	-4.216	< 0.661	-1.161	<RDL
Cr	2.48	18.734	3.12	4.711	<RDL
Mn	1.31	9.917	1.36	2.062	<RDL
Ni	0.778	5.882	< 1.98	1.933	<RDL
P	14.6	110.721	19.9	30.067	<RDL
Pb	3.27	24.725	3.12	4.713	<RDL
Sb	0.741	5.600	< 2.65	1.112	<RDL
Se	2.00	15.145	2.33	3.517	<RDL
Tl	< 0.265	-0.500	N/A	N/A	N/A
Zn	20.0	151.166	21.3	32.230	<RDL

Triangle Laboratories, Inc.
801 Capitola Drive * Durham, NC 27713
Tele: (919) 544-5729 * Fax: (919) 544-5491

P 05-Nov-97 at 03:48 PM

Client: **Pacific Environmental Services**
Project Number: **43231**

QA: Duplicate

Client Sample ID:	I-M29-2 FH	I-M29-2 FH DA
TLI Sample ID:	183-3-3B FH	183-3-3B FH DA
Date Prepared:	September 25-26, 1997	September 25-26, 1997
Date Analyzed:	October 07-08, 1997	October 07-08, 1997
Matrix:	Air	Air

	Sample		Duplicate		
Analyte	Total ug Result	ug/L Conc.	Total ug Result	ug/L Conc.	RPD
Ag	5.05	50.476	5.05	50.490	0.000%
As	2.96	29.564	3.36	33.608	<RDL
Ba	27.2	272.481	27.4	273.639	0.733%
Be	0.148	1.477	0.148	1.475	<RDL
Cd	29.9	298.885	29.9	298.801	0.000%
Co	0.510	5.101	0.499	4.991	<RDL
Cr	15.4	154.455	15.5	155.185	0.647%
Mn	1260	12557.011	1250	12519.816	0.797%
Ni	5.14	51.422	5.20	52.033	1.16%
P	42.0	420.150	42.5	425.212	1.18%
Pb	1490	14895.593	1490	14905.329	0.000%
Sb	10.6	105.889	10.7	106.854	0.939%
Se	1.88	18.809	1.83	18.289	<RDL
Tl	0.310	3.100	N/A	N/A	N/A
Zn	8480	1695.179	8510	1701.079	0.353%
					—
					—
					—
					—
					—
					—
					—
					—
					—
					—
					—
					—
					—
					—
					—
					—

Triangle Laboratories, Inc.
801 Capitola Drive * Durham, NC 27713
Tele: (919) 544-5729 * Fax: (919) 544-5491

Pr 05-Nov-97 at 03:48 PM

Client: **Pacific Environmental Services**
Project Number: **43231**

QA: Duplicate

Client Sample ID:	I-M29-3 FH	I-M29-3 FH DA
TLI Sample ID:	184-23-3AB FH	184-23-3AB FH DA
Date Prepared:	October 02-03, 1997	October 02-03, 1997
Date Analyzed:	October 07,08,23 & 30, 1997	October 07,08,23 & 30, 1997
Matrix:	Air	Air

	Sample		Duplicate		
Analyte	Total ug Result	ug/L Conc.	Total ug Result	ug/L Conc.	RPD
Ag	18.9	18.897	18.9	18.883	0.000%
As	314	15.679	346	17.302	<RDL
Ba	2500	124.801	2540	127.045	1.59%
Be	9.11	9.108	9.05	9.051	<RDL
Cd	3010	150.528	3070	153.500	1.97%
Co	47.3	47.267	47.7	47.701	0.842%
Cr	2030	101.748	2080	104.130	2.43%
Mn	165700	8285.539	168600	8429.759	1.73%
Ni	498	24.911	513	25.631	<RDL
P	61100	3054.165	62700	3137.046	2.58%
Pb	147800	7389.845	150900	7544.282	2.08%
Sb	1290	64.666	1360	68.209	5.28%
Se	116	115.553	116	116.150	0.000%
Tl	131	130.862	139	139.193	5.93%
Zn	774200	38710.043	789600	39478.926	1.97%
					--
					--
					--
					--
					--
					--
					--
					--
					--
					--
					--
					--
					--
					--
					--
					--
					--

Triangle Laboratories, Inc.
801 Capitola Drive * Durham, NC 27713
Tele: (919) 544-5729 * Fax: (919) 544-5491

Pr 30-Oct-97 at 02:18 PM

Client: Pacific Environmental Services
Project Number: 43231

QA: Duplicate

Client Sample ID:	I-M29-2 BH	I-M29-2 BH DA
TLI Sample ID:	183-3-3C BH	183-3-3C BH DA
Date Prepared:	September 25-26, 1997	September 25-26, 1997
Date Analyzed:	October 07-08, 1997	October 07-08, 1997
Matrix:	Air	Air

	Sample		Duplicate		
Analyte	Total ug Result	ug/L Conc.	Total ug Result	ug/L Conc.	RPD
Ag	0.181	1.419	0.194	1.515	<RDL
As	< 0.639	-4.446	< 0.639	-4.545	<RDL
Ba	1.95	15.256	1.94	15.177	<RDL
Be	< 0.128	0.105	< 0.128	0.094	<RDL
Cd	0.142	1.109	0.157	1.225	<RDL
Co	< 0.128	-2.508	< 0.128	-1.929	<RDL
Cr	2.40	18.795	2.29	17.896	<RDL
Mn	10.0	78.280	9.99	78.199	0.100%
Ni	0.480	3.754	< 0.383	2.658	<RDL
P_	15.6	121.730	16.5	129.406	<RDL
Pb	12.2	95.221	12.3	96.231	0.816%
Sb	< 0.511	2.873	< 0.511	3.852	<RDL
Se	0.820	6.414	0.656	5.137	<RDL
Tl	< 0.256	-0.400	N/A	N/A	N/A
Zn	58.7	459.381	58.7	459.230	0.000%

Triangle Laboratories, Inc.
801 Capitola Drive * Durham, NC 27713
Tele: (919) 544-5729 * Fax: (919) 544-5491

P 05-Nov-97 at 03:48 PM

Client: **Pacific Environmental Services**
Project Number: **43231**

QA: Matrix Spikes (Post-Digestion)

Client Sample ID:	I-M29-1 FH PDS	
TLI Sample ID:	183-3-2B FH PDS	
Date Prepared:	September 25-26, 1997	
Date Analyzed:	October 07-08, 1997	
Matrix:	Air	

	Post-Digestion Spike			Post-Digestion Spike Duplicate			RPD
Analyte	Recovered Amount (ug/L)	Spike Amount (ug/L)	% Recovery	Recovered Amount (ug/L)	Spike Amount (ug/L)	% Recovery	
Ag	56.28	50	91%				---
As	52.32	50	90%				---
Ba	100.90	50	99%				---
Be	45.60	50	91%				---
Cd	77.08	50	97%				---
Co	46.53	50	93%				---
Cr	91.75	50	101%				---
Mn	1619.02	50	Spike Low				---
Ni	99.32	50	98%				---
P_	106.60	1000	0%				---
Pb	1945.17	50	Spike Low				---
Sb	68.97	50	90%				---
Se	53.34	50	90%				---
Tl	23.50	50	47%				---
Zn	11470.90	200	Spike Low				---

Triangle Laboratories, Inc.
801 Capitola Drive * Durham, NC 27713
Tele: (919) 544-5729 * Fax: (919) 544-5491

Printed: 05-Nov-97 at 03:48 PM

Client: **Pacific Environmental Services**
Project Number: **43231**

QA: Matrix Spikes (Post-Digestion)

Client Sample ID:	I-M29-2 FH PDS	
TLI Sample ID:	184-23-2AB FH PDS	
Date Prepared:	October 02-03, 1997	
Date Analyzed:	October 07,08,23 & 30, 1997	
Matrix:	Air	

	Post-Digestion Spike			Post-Digestion Spike Duplicate			
Analyte	Recovered Amount (ug/L)	Spike Amount (ug/L)	% Recovery	Recovered Amount (ug/L)	Spike Amount (ug/L)	% Recovery	RPD
Ag	87.50	50	74%				---
As	61.65	50	99%				---
Ba	188.76	50	93%				---
Be	58.87	50	87%				---
Cd	233.79	50	91%				---
Co	87.37	50	89%				---
Cr	167.82	50	92%				---
Mn	10177.98	50	Spike Low				---
Ni	70.82	50	97%				---
P_	1115.16	1000	98%				---
Pb	9627.54	50	Spike Low				---
Sb	117.81	50	97%				---
Se	173.05	50	91%				---
Tl	214.25	50	93%				---
Zn	54164.58	200	Spike Low				---

Triangle Laboratories, Inc.
801 Capitola Drive * Durham, NC 27713
Tele: (919) 544-5729 * Fax: (919) 544-5491

Printed: 30-Oct-97 at 02:18 PM

Client: **Pacific Environmental Services**
Project Number: **43231**

QA: Matrix Spikes (Post-Digestion)

Client Sample ID:	I-M29-1 BH PDS	
TLI Sample ID:	183-3-2C BH PDS	
Date Prepared:	September 25-26, 1997	
Date Analyzed:	October 07-08, 1997	
Matrix:	Air	

	Post-Digestion Spike			Post-Digestion Spike Duplicate			RPD
Analyte	Recovered Amount (ug/L)	Spike Amount (ug/L)	% Recovery	Recovered Amount (ug/L)	Spike Amount (ug/L)	% Recovery	
Ag	46.67	50	91%				---
As	42.67	50	85%				---
Ba	52.75	50	99%				---
Be	46.90	50	94%				---
Cd	52.22	50	98%				---
Co	45.78	50	92%				---
Cr	65.84	50	94%				---
Mn	59.62	50	99%				---
Ni	53.36	50	95%				---
P	108.02	1000	-0%				---
Pb	73.37	50	97%				---
Sb	51.92	50	93%				---
Se	57.09	50	84%				---
Tl	22.20	50	44%				---
Zn	343.12	200	96%				---

Triangle Laboratories, Inc.
801 Capitola Drive * Durham, NC 27713
Tele: (919) 544-5729 * Fax: (919) 544-5491

Printed: 05-Nov-97 at 03:48 PM

Client: **Pacific Environmental Services**
Project Number: **43231**

QA: Method Blank

TLI Sample ID:	43231 MB
Date Prepared:	September 25-26, 1997
Date Analyzed:	October 07-08, 1997
Matrix:	N/A

	Method Blank		
Analyte	Recovered Amount (ug/L)	Detection Limit (ug/L)	Pass or Fail
Ag	0.01	1	Pass
As	0.21	5	Pass
Ba	0.13	2	Pass
Be	0.30	1	Pass
Cd	-0.19	1	Pass
Co	-0.08	1	Pass
Cr	0.23	2	Pass
Mn	0.80	2	Pass
Ni	0.77	3	Pass
P	3.21	30	Pass
Pb	-0.07	2	Pass
Sb	0.50	4	Pass
Se	0.10	3	Pass
Tl	1.20	2	Pass
Zn	22.53	12	Fail
		---	---
		---	---
		---	---
		---	---
		---	---
		---	---
		---	---
		---	---
		---	---
		---	---
		---	---
		---	---
		---	---
		---	---
		---	---
		---	---

Client: **Pacific Environmental Services**
Project Number: **43231**

QA: ICP Method Blank

TLI Sample ID:	43231 MB
Date Prepared:	October 02-03, 1997
Date Analyzed:	October 07,08,23 & 30, 1997
Matrix:	N/A

	Method Blank		
Analyte	Recovered Amount (ug/L)	Detection Limit (ug/L)	Pass or Fail
Ag	-0.04	1	Pass
As	-1.68	5	Pass
Ba	-0.04	2	Pass
Be	-0.81	1	Pass
Cd	-0.24	1	Pass
Co	-0.53	1	Pass
Cr	0.07	2	Pass
Mn	2.84	2	Fail
Ni	-1.13	3	Pass
P_	-13.83	30	Pass
Pb	1.67	2	Pass
Sb	-0.82	4	Pass
Se	0.23	3	Pass
Tl	-5.42	5	Pass
Zn	9.79	12	Pass
		---	---
		---	---
		---	---
		---	---
		---	---
		---	---
		---	---
		---	---
		---	---
		---	---
		---	---
		---	---
		---	---
		---	---
		---	---
		---	---

Client: Pacific Environmental Services
Project Number: 43231

QA: Lab Control Spikes

TLI Sample ID:	43231 LCS	
Date Prepared:	September 25-26, 1997	
Date Analyzed:	October 07-08, 1997	
Matrix:	N/A	

	Lab Control Spike			Lab Control Spike Duplicate			
Analyte	Recovered Amount (ug/L)	Spike Amount (ug/L)	% Recovery	Recovered Amount (ug/L)	Spike Amount (ug/L)	% Recovery	RPD
Ag	46.92	50	94%				---
As	49.55	50	99%				---
Ba	50.04	50	100%				---
Be	47.96	50	96%				---
Cd	50.47	50	101%				---
Co	49.51	50	99%				---
Cr	50.38	50	101%				---
Mn	50.22	50	100%				---
Ni	50.80	50	102%				---
P	1027.18	1000	103%				---
Pb	48.37	50	97%				---
Sb	51.11	50	102%				---
Se	48.89	50	98%				---
Tl	49.80	50	100%				---
Zn	202.13	200	101%				---

Triangle Laboratories, Inc.
801 Capitola Drive * Durham, NC 27713
Tele: (919) 544-5729 * Fax: (919) 544-5491

Printed: 05-Nov-97 at 03:48 PM

Client: Pacific Environmental Services
Project Number: 43231

QA: ICP Lab Control Spikes

TLI Sample ID:	43231 LCS	
Date Prepared:	October 02-03, 1997	
Date Analyzed:	October 07,08,23 & 30, 1997	
Matrix:	N/A	

	Lab Control Spike			Lab Control Spike Duplicate			RPD
Analyte	Recovered Amount (ug/L)	Spike Amount (ug/L)	% Recovery	Recovered Amount (ug/L)	Spike Amount (ug/L)	% Recovery	
Ag	43.16	50	86%				---
As	44.64	50	89%				---
Ba	46.44	50	93%				---
Be	45.27	50	91%				---
Cd	45.89	50	92%				---
Co	46.96	50	94%				---
Cr	46.87	50	94%				---
Mn	47.66	50	95%				---
Ni	45.34	50	91%				---
P	904.63	1000	90%				---
Pb	46.69	50	93%				---
Sb	47.00	50	94%				---
Se	44.37	50	89%				---
Tl	41.73	50	83%				---
Zn	192.40	200	96%				---

Triangle Laboratories, Inc.
801 Capitola Drive * Durham, NC 27713
Tele: (919) 544-5729 * Fax: (919) 544-5491

Printed: 30-Oct-97 at 02:18 PM

Client: Pacific Environmental Services
Project Number: 43231

Sample Report

Date Received:	September 12,15 & 23, 1997
Date Prepared:	Sept. 25-Oct.10, 1997
Date Analyzed:	Sept. 30 & Oct.1,6,8 & 10, 1997
DATA FILE:	AB11, AB812, AB815, AB816, & AB818
Matrix:	Air

ANALYTE:	Hg
ug/L RDL:	0.2
Analysis Method:	29
Instrument:	P E Zeeman 5100
Spike Conc. (ug/L)	5

CVAA ANALYTE SUMMARY REPORT

Client Sample ID	TLI SAMPID	ug/L CONC	ml TV	ml FV	ml Aliquot	DIL FACTOR	Total ug RESULT	Avg. RESULT	RPD	%REC
I-M29-FHAR,FIELD BLANK FH	183-3-1B,184-23-4AB	0.087	N/A	100	5	1	< 0.400	–	–	–
I-M29-FHAR,FIELD BLANK FH D	183-3-1B,184-23-4AB D	0.079	N/A	100	5	1	< 0.400	< 0.400	–	–
I-M29-FHAR,BLK-5% 10% BH	183-3-1BC	0.013	300	N/A	5	1	< 1.20	–	–	–
I-M29-FHAR,BLK-5% 10% BH D	183-3-1BC D	0.005	300	N/A	5	1	< 1.20	< 1.20	–	–
I-M29-BLK-BHAR HNO3	183-3-1D	0.027	61	N/A	5	1	< 0.244	–	–	–
I-M29-BLK-BHAR HNO3 D	183-3-1D D	0.029	61	N/A	5	1	< 0.244	< 0.244	–	–
I-M29-BLK-KMnO4	183-3-1E	0.076	263	N/A	5	1	< 1.05	–	–	–
I-M29-BLK-KMnO4 D	183-3-1E D	0.176	263	N/A	5	1	< 1.05	< 1.05	–	–
I-M29-BLK-KMnO4-HCl	183-3-1EF	0.008	10.5	N/A	5	1	< 0.042	–	–	–
I-M29-BLK-KMnO4-HCl D	183-3-1EF D	0.024	10.5	N/A	5	1	< 0.042	< 0.042	–	–
I-M29-1-FHAR FH	183-3-2B,184-23-1AB	5.269	N/A	100	5	1	10.5	–	–	–
I-M29-1-FHAR FH D	183-3-2B,184-23-1AB D	5.153	N/A	100	5	1	10.3	10.4	–	–
I-M29-1-5% 10% BH	183-3-2C	3.766	410	N/A	5	1	30.9	–	–	–
I-M29-1-5% 10% BH D	183-3-2C D	4.031	410	N/A	5	1	33.1	32.0	–	–
I-M29-1-BHAR HNO3	183-3-2D	0.070	100	N/A	5	1	< 0.400	–	–	–
I-M29-1-BHAR HNO3 D	183-3-2D D	0.073	100	N/A	5	1	< 0.400	< 0.400	–	–
I-M29-1-KMnO4	183-3-2E	0.698	370	N/A	5	1	5.17	–	–	–
I-M29-1-KMnO4 D	183-3-2E D	0.730	370	N/A	5	1	5.40	5.28	–	–
I-M29-1-KMnO4-HCl	183-3-2F	0.067	21	N/A	5	1	< 0.084	–	–	–
I-M29-1-KMnO4-HCl D	183-3-2F D	0.064	21	N/A	5	1	< 0.084	< 0.084	–	–
I-M29-2-FHAR FH	183-3-3B,184-23-2AB	9.249	N/A	100	5	1	18.5	–	–	–
I-M29-2-FHAR FH D	183-3-3B,184-23-2AB D	9.097	N/A	100	5	1	18.2	18.3	–	–
I-M29-2-5% 10% BH	183-3-3C DX5	3.449	460	N/A	5	5	159	–	–	–
I-M29-2-5% 10% BH D	183-3-3C DX5 D	3.428	460	N/A	5	5	158	158	–	–
I-M29-2-BHAR HNO3	183-3-3D	0.807	110	N/A	5	1	1.78	–	–	–
I-M29-2-BHAR HNO3 D	183-3-3D D	0.788	110	N/A	5	1	1.73	1.75	–	–
I-M29-2-KMnO4	183-3-3E	1.174	360	N/A	5	1	8.45	–	–	–
I-M29-2-KMnO4 D	183-3-3E D	1.217	360	N/A	5	1	8.76	8.61	–	–
I-M29-2-HCl	183-3-3F	0.062	23	N/A	5	1	< 0.092	–	–	–
I-M29-2-HCl D	183-3-3F D	0.053	23	N/A	5	1	< 0.092	< 0.092	–	–

Client: Pacific Environmental Services
Project Number: 43231

Sample Report

Date Received:	September 12 & 15, 1997
Date Prepared:	Sept. 25-Oct.10, 1997
Date Analyzed:	Sept, 30 & Oct.1,8 & 10, 1997
DATA FILE:	AB11, AB812, AB816, & AB818
Matrix:	Air

ANALYTE:	Hg
ug/L RDL:	0.2
Analysis Method:	29
Instrument:	P E Zeeman 5100
Spike Conc. (ug/L)	5

CVAA ANALYTE SUMMARY REPORT

Client Sample ID	TLI SAMPID	ug/L CONC	ml TV	ml FV	ml Aliquot	DIL FACTOR	Total ug RESULT	Avg. RESULT	RPD	%REC
M29-3-FHAR FH	183-3-4B	0.060	N/A	100	5	1	< 0.400	--	--	--
M29-3-FHAR FH D	183-3-4B D	0.049	N/A	100	5	1	< 0.400	< 0.400	--	--
I-M29-3-5% 10% BH	183-3-4C	7.919	340	N/A	5	1	53.8	--	--	--
M29-3-5% 10% BH D	183-3-4C D	7.987	340	N/A	5	1	54.3	54.1	--	--
I-M29-3-BHAR HNO3	183-3-4D	0.143	100	N/A	5	1	< 0.400	--	--	--
I-M29-3-BHAR HNO3 D	183-3-4D D	0.141	100	N/A	5	1	< 0.400	< 0.400	--	--
M29-3-KMnO4	183-3-4E	0.726	393	N/A	5	1	5.71	--	--	--
I-M29-3-KMnO4 D	183-3-4E D	0.601	393	N/A	5	1	4.72	5.22	--	--
M29-3-HCl	183-3-4F	0.097	21	N/A	5	1	< 0.084	--	--	--
M29-3-HCl D	183-3-4F D	0.125	21	N/A	5	1	< 0.084	< 0.084	--	--
O-M29-FHAR FH	183-3-5B	0.043	N/A	100	5	1	< 0.400	--	--	--
I-M29-FHAR FH D	183-3-5B D	0.054	N/A	100	5	1	< 0.400	< 0.400	--	--
O-M29-FHAR,BLK-5% 10% BH	183-3-5BC	0.003	150	N/A	5	1	< 0.600	--	--	--
O-M29-FHAR,BLK-5% 10% BH D	183-3-5BC D	0.005	150	N/A	5	1	< 0.600	< 0.600	--	--
I-M29-BLK-BHAR HNO3	183-3-5D	0.268	50	N/A	5	1	0.268	--	--	--
O-M29-BLK-BHAR HNO3 D	183-3-5D D	0.290	50	N/A	5	1	0.290	0.279	--	--
I-M29-BLK-KMnO4	183-3-5E	0.043	255	N/A	5	1	< 1.02	--	--	--
I-M29-BLK-KMnO4 D	183-3-5E D	0.062	255	N/A	5	1	< 1.02	< 1.02	--	--
O-M29-3-HCl Field Blank	183-3-5EF	0.011	110	N/A	5	1	< 0.440	--	--	--
I-M29-3-HCl D Cmc	183-3-5EF D	0.035	110	N/A	5	1	< 0.440	< 0.440	--	--
O-M29-1-FHAR FH	183-3-6B	0.284	N/A	100	5	1	0.568	--	--	--
O-M29-1-FHAR FH D	183-3-6B D	0.076	N/A	100	5	1	< 0.400	< 0.484	--	--
I-M29-1-5% 10% BH	183-3-6C DX5	7.221	350	N/A	5	5	253	--	--	--
O-M29-1-5% 10% BH D	183-3-6C DX5 D	7.183	350	N/A	5	5	251	252	--	--
O-M29-1-BHAR HNO3	183-3-6D	1.002	99	N/A	5	1	1.98	--	--	--
I-M29-1-BHAR HNO3 D	183-3-6D D	0.994	99	N/A	5	1	1.97	1.98	--	--
O-M29-1-KMnO4	183-3-6E	0.666	375	N/A	5	1	5.00	--	--	--
O-M29-1-KMnO4 D	183-3-6E D	0.707	375	N/A	5	1	5.30	5.15	--	--
O-M29-1-HCl	183-3-6F	0.915	24	N/A	5	1	0.439	--	--	--
O-M29-1-HCl D	183-3-6F D	0.208	24	N/A	5	1	0.100	0.270	--	--

Client: Pacific Environmental Services
Project Number: 43231

Sample Report

Date Received:	September 12 & 15, 1997
Date Prepared:	Sept. 25-Oct.10, 1997
Date Analyzed:	Sept. 30 & Oct.1,8 & 10, 1997
DATA FILE:	AB11, AB812, AB816, & AB818
Matrix:	Air

ANALYTE: Hg	
ug/L RDL: 0.2	
Analysis Method:	29
Instrument: P E Zeeman 5100	
Spike Conc. (ug/L)	5

CVAA ANALYTE SUMMARY REPORT

Client Sample ID	TLI SAMPID	ug/L CONC	ml TV	ml FV	ml Aliquot	DIL FACTOR	Total ug RESULT	Avg. RESULT	RPD	%REC
O-M29-2-FHAR FH	183-3-7B	0.049	N/A	100	5	1	< 0.400	--	--	--
O-M29-2-FHAR FH D	183-3-7B D	0.114	N/A	100	5	1	< 0.400	< 0.400	--	--
O-M29-2-5% 10% BH	183-3-7C DX5	4.508	360	N/A	5	5	162	--	--	--
O-M29-2-5% 10% BH D	183-3-7C DX5 D	4.895	360	N/A	5	5	176	169	--	--
O-M29-2-BHAR HNO3	183-3-7D	1.565	105	N/A	5	1	3.29	--	--	--
O-M29-2-BHAR HNO3 D	183-3-7D D	1.467	105	N/A	5	1	3.08	3.18	--	--
O-M29-2-KMnO4	183-3-7E	1.316	380	N/A	5	1	10.0	--	--	--
O-M29-2-KMnO4 D	183-3-7E D	1.273	380	N/A	5	1	9.67	9.84	--	--
O-M29-2-HCl	183-3-7F	0.103	24	N/A	5	1	< 0.096	--	--	--
O-M29-2-HCl D	183-3-7F D	0.135	24	N/A	5	1	< 0.096	< 0.096	--	--
O-M29-3-FHAR FH	183-3-8B	0.051	N/A	100	5	1	< 0.400	--	--	--
O-M29-3-FHAR FH D	183-3-8B D	0.043	N/A	100	5	1	< 0.400	< 0.400	--	--
O-M29-3-5% 10% BH	183-3-8C DX2	7.288	370	N/A	5	2	108	--	--	--
O-M29-3-5% 10% BH D	183-3-8C DX2 D	6.868	370	N/A	5	2	102	105	--	--
O-M29-3-BHAR HNO3	183-3-8D	0.990	102	N/A	5	1	2.02	--	--	--
O-M29-3-BHAR HNO3 D	183-3-8D D	0.974	102	N/A	5	1	1.99	2.00	--	--
O-M29-3-KMnO4	183-3-8E	0.620	383	N/A	5	1	4.75	--	--	--
O-M29-3-KMnO4 D	183-3-8E D	0.615	383	N/A	5	1	4.71	4.73	--	--
O-M29-3-HCl	183-3-8F	0.059	25	N/A	5	1	< 0.100	--	--	--
O-M29-3-HCl D	183-3-8F D	0.112	25	N/A	5	1	< 0.100	< 0.100	--	--
I,O-M29-REAGENT BLANK FH	184-23-5,10AB,183-15-1B	0.035	N/A	100	5	1	< 0.400	--	--	--
I,O-M29-REAGENT BLANK FH D	184-23-5,10AB,183-15-1B D	0.022	N/A	100	5	1	< 0.400	< 0.400	--	--
REAGENT BLANK BH	183-15-1BD	0.054	300	N/A	5	1	< 1.20	--	--	--
REAGENT BLANK BH D	183-15-1BD D	0.043	300	N/A	5	1	< 1.20	< 1.20	--	--
REAGENT BLANK HNO3	183-15-1B	-0.003	30	N/A	5	1	< 0.120	--	--	--
REAGENT BLANK HNO3 D	183-15-1B D	-0.003	30	N/A	5	1	< 0.120	< 0.120	--	--
REAGENT BLANK HCl	183-15-1E	0.003	100	N/A	5	1	< 0.400	--	--	--
REAGENT BLANK HCl D	183-15-1E D	-0.005	100	N/A	5	1	< 0.400	< 0.400	--	--
REAGENT BLANK DI H2O	183-15-1C	0.005	345	N/A	5	1	< 1.38	--	--	--
REAGENT BLANK DI H2O D	183-15-1C D	0.008	345	N/A	5	1	< 1.38	< 1.38	--	--

Client: Pacific Environmental Services
Project Number: 43231

Sample Report

Date Received:	September 12 & 15, 1997
Date Prepared:	Sept. 25-Oct.10, 1997
Date Analyzed:	Sept. 30 & Oct.1,8 & 10, 1997
DATA FILE:	AB11, AB812, AB816, & AB818
Matrix:	Air

ANALYTE:	Hg
ug/L RDL:	0.2
Analysis Method:	29
Instrument:	P E Zeeman 5100
Spike Conc. (ug/L)	5

CVAA ANALYTE SUMMARY REPORT

Client Sample ID	TLI SAMPID	ug/L CONC	ml TV	ml FV	ml Aliquot	DIL FACTOR	Total ug RESULT	Avg. RESULT	RPD	%REC
M29-FHAR,BKL-5% 10% BH MS	183-3-1BC MS	4.827	300	N/A	5	1	29.0	--	--	97%
M29-FHAR,BKL-5% 10% BH MSD	183-3-1BC MSD	4.619	300	N/A	5	1	27.7	28.3	4.40%	92%
I-M29-1-5% 10% BH MS	183-3-2C MS	7.640	410	N/A	5	1	62.6	--	--	75%
M29-1-5% 10% BH MSD	183-3-2C MSD	7.890	410	N/A	5	1	64.7	63.7	3.22%	80%
M29-1-KMnO4 MS	183-3-2E MS	5.183	370	N/A	5	1	38.4	--	--	89%
I-M29-1-KMnO4 MSD	183-3-2E MSD	5.076	370	N/A	5	1	37.6	38.0	2.09%	87%
M29-2-5% 10% BH MS	183-3-3C MSX5	4.538	460	N/A	5	5	209	--	--	Spike Low
M29-2-5% 10% BH MSD	183-3-3C MSDX5	5.011	460	N/A	5	5	231	220	9.91%	Spike Low
I-M29-3-5% 10% BH MS	183-3-4C MSX2	4.689	340	N/A	5	2	63.8	--	--	28%
M29-3-5% 10% BH MSD	183-3-4C MSDX2	4.383	340	N/A	5	2	59.6	61.7	6.75%	16%
O-M29-1-5% 10% BH MS	183-3-6C MSX5	8.355	350	N/A	5	5	292	--	--	Spike Low
O-M29-1-5% 10% BH MSD	183-3-6C MSDX5	8.436	350	N/A	5	5	295	294	0.965%	Spike Low
-M29-2-KMnO4 MS	183-3-7E MS	6.555	380	N/A	5	1	49.8	--	--	105%
O-M29-2-KMnO4 MSD	183-3-7E MSD	6.874	380	N/A	5	1	52.2	51.0	4.75%	112%
-M29-3-KMnO4 MS	183-3-8E MS	4.902	383	N/A	5	1	37.5	--	--	86%
-M29-3-KMnO4 MSD	183-3-8E MSD	4.830	383	N/A	5	1	37.0	37.3	1.48%	84%
REAGENT BLANK BH MS	183-15-1BD MS	5.842	300	N/A	5	1	35.1	--	--	117%
EAGENT BLANK BH MSD	183-15-1BD MSD	5.105	300	N/A	5	1	30.6	32.8	13.5%	102%
I-M29-FHAR,BKL-5% 10% BH MS	True Spike MS	5	300	N/A	5	1	30.0	--	--	--
I-M29-FHAR,BKL-5% 10% BH MSD	True Spike MSD	5	300	N/A	5	1	30.0	--	--	--
M29-1-5% 10% BH MS	True Spike MS	5	410	N/A	5	1	41.0	--	--	--
I-M29-1-5% 10% BH MSD	True Spike MSD	5	410	N/A	5	1	41.0	--	--	--
M29-1-KMnO4 MS	True Spike MS	5	370	N/A	5	1	37.0	--	--	--
M29-1-KMnO4 MSD	True Spike MSD	5	370	N/A	5	1	37.0	--	--	--
I-M29-2-5% 10% BH MS	True Spike MS	5	460	N/A	5	1	46.0	--	--	--
M29-2-5% 10% BH MSD	True Spike MSD	5	460	N/A	5	1	46.0	--	--	--
I-M29-3-5% 10% BH MS	True Spike MS	5	340	N/A	5	1	34.0	--	--	--
I-M29-3-5% 10% BH MSD	True Spike MSD	5	340	N/A	5	1	34.0	--	--	--
-M29-1-5% 10% BH MS	True Spike MS	5	350	N/A	5	1	35.0	--	--	--
O-M29-1-5% 10% BH MSD	True Spike MSD	5	350	N/A	5	1	35.0	--	--	--

Client: Pacific Environmental Services
Project Number: 43231

Sample Report

Date Received:	September 12 & 15, 1997
Date Prepared:	Sept. 25-Oct.10, 1997
Date Analyzed:	Sept. 30 & Oct.1,8 & 10, 1997
DATA FILE:	AB11, AB812, AB816, & AB818
Matrix:	Air

ANALYTE: Hg	
ug/L RDL: 0.2	
Analysis Method:	29
Instrument: P E Zeeman 5100	
Spike Conc. (ug/L)	5

CVAA ANALYTE SUMMARY REPORT

Client Sample ID	TLI SAMPID	ug/L CONC	ml TV	ml FV	ml Aliquot	DIL FACTOR	Total ug RESULT	Avg RESULT	RPD	%REC
O-M29-2-KMnO4 MS	True Spike MS	5	380	N/A	5	1	38.0	--	--	--
O-M29-2-KMnO4 MSD	True Spike MSD	5	380	N/A	5	1	38.0	--	--	--
O-M29-3-KMnO4 MS	True Spike MS	5	383	N/A	5	1	38.3	--	--	--
O-M29-3-KMnO4 MSD	True Spike MSD	5	383	N/A	5	1	38.3	--	--	--
REAGENT BLANK BH MS	True Spike MS	5	300	N/A	5	1	30.0	--	--	--
REAGENT BLANK BH MSD	True Spike MSD	5	300	N/A	5	1	30.0	--	--	--
Method Blank	43231 MB1	0.030	--	--	--	--	--	--	--	--
Method Blank D	43231 MB1 D	0.027	--	--	--	--	--	--	--	--
LCS	43231 LCS1	4.979	--	--	--	--	--	--	--	100%
LCS D	43231 LCS1 D	5.117	--	--	--	--	--	--	--	102%
Method Blank	43231 MB2	0.035	--	--	--	--	--	--	--	--
Method Blank D	43231 MB2 D	0.046	--	--	--	--	--	--	--	--
LCS	43231 LCS2	5.076	--	--	--	--	--	--	--	102%
LCS D	43231 LCS2 D	5.280	--	--	--	--	--	--	--	106%
Method Blank	43231 MB3	0.008	--	--	--	--	--	--	--	--
Method Blank D	43231 MB3 D	0.011	--	--	--	--	--	--	--	--
LCS	43231 LCS3	4.646	--	--	--	--	--	--	--	93%
LCS D	43231 LCS3 D	4.400	--	--	--	--	--	--	--	88%
Method Blank	43231 MB5	0.008	--	--	--	--	--	--	--	--
Method Blank D	43231 MB5 D	0.030	--	--	--	--	--	--	--	--
LCS	43231 LCS5	5.526	--	--	--	--	--	--	--	111%
LCS D	43231 LCS5 D	5.053	--	--	--	--	--	--	--	101%
Method Blank	43231 MB6	-0.003	--	--	--	--	--	--	--	--
Method Blank D	43231 MB6 D	0.000	--	--	--	--	--	--	--	--
LCS	43231 LCS6	4.574	--	--	--	--	--	--	--	91%
LCS D	43231 LCS6 D	4.912	--	--	--	--	--	--	--	98%

Triangle Laboratories, Inc.
801 Capitola Drive * Durham, North Carolina 27713
Tele: (919) 544-5729 * Fax: (919) 544-5491

Printed: 05-Nov-97 at 11:19 AM

COPY Mail 11/17/

Page 1 of 2

ANALYTICAL REQUEST AND CHAIN OF CUSTODY

PLANT: Waupaca Foundry

PROJECT #: S414.003

RECOVERY PERSON: M Hamilton

SAMPLE TECHNICIAN: J Malone, A Dougherty, M Milbourne

ANALYTICAL REQUEST

SAMPLE IDENTIFICATION	COLLECTION DATE	COLLECTION TIME	SAMPLE NAME	NUMBER OF CONTAINERS	FHAce (Acetone)	FHAR (0.1N HNO3)	Filter	5%-10% (HNO3/H2O2)	BHAR (0.1N HNO3)	KMnO4 (Permanganate Rinse)	HCl (8N)				COMMENTS (Type of container, special preparation, special handling, etc.)
Inlet Method 29 Blank	9/8/97		I-M29-Blk	7											
Inlet Method 29 Run 1	9/9/97		I-M29-1	7											
Inlet Method 29 Run 2	9/10/97		I-M29-2	7											
Inlet Method 29 Run 3	9/10/97		I-M29-3	7											
Outlet Method 29 Blank	9/8/97		O-M29-Blk	7											
Outlet Method 29 Run 1	9/9/97		O-M29-Run 1	7											
Outlet Method 29 Run 2	9/10/97		O-M29-Run 2	7											
Outlet Method 29 Run 3	9/10/97		O-M29-Run 3	7											

RELINQUISHER'S NAME	DATE/TIME	RELINQUISHER'S SIGNATURE	SHIPPER'S NAME AND ID NUMBER
[signature]	9/11/97-1030	Ronald Kolde / [signature]	DEECO
Arthur Dougherty	9/11/97-1030	[signature]	Mike Milbourne 9/12/97 1628 [signature]
Arthur Dougherty	9/12/97-1432	[signature]	Martin McSpadd 9/12/97 1628 TLT
Michael J Milbourne	9/12/97-1437	Michael J Milbourne	

RECEIVER'S NAME / RECEIVER'S SIGNATURE

62

ANALYTICAL REQUEST AND CHAIN OF CUSTODY

PLANT: Waupaca Foundry

PROJECT #: S 414.003

RECOVERY PERSON: M Hami Hon

SAMPLE TECHNICIAN: M Hami Hon (Reagent Blanks only)

ANALYTICAL REQUEST

SAMPLE IDENTIFICATION	COLLECTION DATE	COLLECTION TIME	SAMPLE NAME	NUMBER OF CONTAINERS										COMMENTS (Type of container, special preparation, special handling, etc.)
Reagent Blank Acetone	9/11/97	7:50	Reagent Blank 100ml Acetone	1										
Reagent Blank 0.1N HNO_3	9/11/97	7:45	Reagent Blank 160ml 0.1N HNO_3	1										
Reagent Blank DI Water	9/11/97	7:45	Reagent Blank 330ml DI H_2O	1										
Reagent Blank 5% HNO_3/10% H_2O_2	9/11/97	7:45	Reagent Blank 250ml 5%/10%	1										
Reagent Blank 4% $KMnO_4$/10% H_2SO_4	9/11/97	7:48	Reagent Blank 500ml $KMnO_4$	1										
Reagent Blank 8N HCl	9/11/97	7:55	Reagent Blank 100ml 8N HCl	1										
Reagent Blank 3" Filter	9/11/97	8:00	Reagent Blank 3" Quartz Filter	1										
Reagent Blank 4" Filter	9/11/97	8:00	Reagent Blank 4" Quartz Filter	1										

RELINQUISHER'S NAME	DATE/TIME	RELINQUISHER'S SIGNATURE	SHIPPER'S NAME AND ID NUMBER
Ronald J. Kolch	9/11/97 - 1030	[signature]	DEECO
RECEIVER'S NAME	DATE/TIME	RECEIVER'S SIGNATURE	
Arthur Dougherty	9/11/97 - 1030	[signature]	Mike Milbourne 9/12/97 1628 [signature]
Arthur Dougherty	9/11/97 - 1432	[signature]	Karin M. Lynch 9/12/97 1628 TLT
Mike Milbourne	9/11/97 - 1432	[signature]	

BY KMM 9/13/97

SAMPLE RECOVERY DATA

PLANT Waupaca Foundry Run No. I-M29-Blk

DATE 9/8/97 Sample Box No. — Job No. S.414.003

SAMPLE LOCATION Inlet Filter No. 1015

TRAIN PREPARER M Hamilton

SAMPLE RECOVERY PERSON M Hamilton

COMMENTS Includes Front Half Acid Rinse

FRONT HALF

Acetone Container No. ~~I-M29-Blk-F~~ HACE Liquid Level Marked ✓ Sealed ✓

Filter Container No. I-M29-Blk-Filter Sealed ✓

Description of Filter No Particulate

Samples Stored and Locked ✓

BACK HALF/MOISTURE

Container No. I-M29-Blk-5%10% ; I-M29-Blk-BHAR ; I-M29-Blk-KMnO4 ; I-M29-Blk-HCl

Liquid Level Marked ✓ Sealed ✓

IMP. NO.	CONTENTS	INITIAL VOL (ml)	WEIGHT (grams)		
			INITIAL	FINAL	NET
1	5%/10%	100	730.2	729.6	-0.6
2	5%/10%	100	582.5	581.9	-0.6
3	Empty	0	542.8	542.2	-0.6
4	4% KMnO4/10% H2SO4	100	729.2	729.0	-0.2
5	4% KMnO4/10% H2SO4	100	726.6	726.7	0.1
6	Sil Gel	—	776.5	776.9	0.4
TOTAL					-1.5

Description of Impinger Catch: Clear

SAMPLE RECOVERY DATA

PLANT Warpaint Foundry Run No. I-M29-1

DATE 9/2/97 Sample Box No. — Job No. 5414.003

SAMPLE LOCATION Inlet Filter No. 1014

TRAIN PREPARER M Hamilton

SAMPLE RECOVERY PERSON M Hamilton

COMMENTS Front Half Acid Rinse → I-M29-1-FHAR

FRONT HALF

Acetone Container No. I-M29-1-FHAR Liquid Level Marked ✓ Sealed ✓

Filter Container No. I-M29-1-Filter Sealed ✓

Description of Filter Mid Dark Tan to Brown Solid

Samples Stored and Locked ✓

BACK HALF/MOISTURE

Container No. I-M29-1-5%10%; I-M29-1-BHAR; I-M29-1-KMnO4; I-M29-1-HCl

Liquid Level Marked ✓ Sealed ✓

IMP. NO.	CONTENTS	INITIAL VOL (ml)	WEIGHT (grams)		
			INITIAL	FINAL	NET
1	5% HNO3 / 10% H2O2 / 10% H2SO4	100	730.3	769.6	39.6
2	5% HNO3 / 10% H2O2 / 10% H2SO4	100	716.7	712.6	-4.1
3	EMPTY	0	566.2	561.5	-4.7
4	4% KMnO4 / 10% H2SO4	100	731.9	732.4	0.5
5	4% KMnO4 / 10% H2SO4	100	729.9	730.3	0.4
6	Silica Gel	—	752.5	765.5	13.0
TOTAL					44.7

160ml used

Description of Impinger Catch Clear

65

SAMPLE RECOVERY DATA

PLANT Waupaca Foundry Run No. I-M29-2

DATE 9/10/97 Sample Box No. — Job No. S414.003

SAMPLE LOCATION Inlet Filter No. 1019

TRAIN PREPARER M Hamilton

SAMPLE RECOVERY PERSON M Hamilton

COMMENTS Front Half Acid Rinse → ~~FHAR~~ I-M29-2-FHAR

FRONT HALF

Acetone Container No. I-M29-2-FHAR Liquid Level Marked ✓ Sealed ✓

Filter Container No. I-M29-2-Filter Sealed ✓

Description of Filter Brown Particulate

Samples Stored and Locked ✓

BACK HALF/MOISTURE

Container No. I-M29-2-5%10%; I-M29-2-BHAR; I-M29-2-KMnO4; I-M29-2-HCl

Liquid Level Marked ✓ Sealed ✓

IMP. NO.	CONTENTS	INITIAL VOL (ml)	WEIGHT (grams)		
			INITIAL	FINAL	NET
1	5% HNO_3/10% H_2O_2	100	730.7	772.1	41.4
2	5% HNO_3/10% H_2O_2	100	588.8	595.1	6.3
3	Empty	0	545.3	546.4	1.1
4	4% $KMnO_4$/10% H_2SO_4	100	624.5 + 1029 = 728.4	691.3	-37.1
5	4% $KMnO_4$/10% H_2SO_4	100	627.6 + 1029 = 728.6	766.3	34.8
6	Si Gel	—	776.9	801.6	24.7
TOTAL					71.2

Description of Impinger Catch: Clear

SAMPLE RECOVERY DATA

PLANT Waupaca Foundry Run No. I-M29-3

DATE 9/10/97 Sample Box No. — Job No. S414.003

SAMPLE LOCATION Inlet Filter No. 1011

TRAIN PREPARER M Hamilton

SAMPLE RECOVERY PERSON M Hamilton

COMMENTS Front Half Acid Rinse → I-M29-3-FHAR

FRONT HALF

Acetone Container No. I-M29-3-FHAR Liquid Level Marked ✓ Sealed ✓

Filter Container No. I-M29-3-Filter Sealed ✓

Description of Filter Brown Particulate

Samples Stored and Locked ✓

BACK HALF/MOISTURE

Container No. I-M29-3-5%10% ; I-M29-3-BHAR ; I-M29-3-KMnO4 ; I-M29-3-NCI

Liquid Level Marked ✓ Sealed ✓

IMP. NO.	CONTENTS	INITIAL VOL (ml)	WEIGHT (grams)		
			INITIAL	FINAL	NET
1	5% HNO_3/10% H_2O_2	100	729.5	766.6	37.1
2	5% HNO_3/10% H_2O_2	100	709.6	713.1	3.5
3	Empty	0	566.1	566.6	0.5
4	4% $KMnO_4$/10% H_2SO_4	100	731.5	732.0	0.5
5	4% $KMnO_4$/10% H_2SO_4	100	731.9	732.8	0.9
6	Sil Gel	—	765.0	783.2	18.2
TOTAL					60.7

P.1

67

SAMPLE RECOVERY DATA

PLANT Waupaca Foundry Run No. O-M29-Blk

DATE 9/8/97 Sample Box No. — Job No. S414.003

SAMPLE LOCATION Outlet Filter No. 301642

TRAIN PREPARER M Hamilton

SAMPLE RECOVERY PERSON M Hamilton

COMMENTS Includes Front Half Acid Rinse

FRONT HALF

Acetone Container No. O-M29-Blk-FHAc Liquid Level Marked ✓ Sealed ✓

Filter Container No. 301642 Sealed ✓

Description of Filter No Particulate

Samples Stored and Locked ✓

BACK HALF/MOISTURE

Container No. O-M29-Blk-5%10%; O-M29-Blk-BHAR; O-M29-Blk-KMnO4; O-M29-Blk-HCl

Liquid Level Marked ✓ Sealed ✓

IMP. NO.	CONTENTS	INITIAL VOL (ml)	WEIGHT (grams)		
			INITIAL	FINAL	NET
1	5%/10%	100	725.1	724.8	-0.3
2	5%/10%	100	652.7	652.7	0.0
3	Empty	0	551.1	551.1	0.0
4	4% $KMnO_4$/10% H_2SO_4	100	726.4	726.4	0.0
5	4% $KMnO_4$/10% H_2SO_4	100	727.8	727.8	0.0
6	5:1 Gel	—	909.9	910.8	0.9
TOTAL					0.6

Cl.

SAMPLE RECOVERY DATA

PLANT Wagner Faraday Run No. O-M29-1

DATE 8/9/87 Sample Box No. — Job No. S 414.003

SAMPLE LOCATION Outlet Filter No. 301675

TRAIN PREPARER M Hawi Hu

SAMPLE RECOVERY PERSON M Hawi Hu

COMMENTS Front Half Acid Rinse -> O-M29-1-FHAR

FRONT HALF

Acetone Container No. O-M29-1-FHAcc Liquid Level Marked ✓ Sealed ✓

Filter Container No. O-M29-1-Filter Sealed ✓

Description of Filter Light Tan Rings

Samples Stored and Locked ✓

BACK HALF/MOISTURE

Container No. O-M29-1-5%10%; O-M29-1-BHAR; O-M29-1-KMnO4; O-M29-1-HCl

Liquid Level Marked ✓ Sealed ✓

IMP. NO.	CONTENTS	INITIAL VOL (ml)	WEIGHT (grams)		
			INITIAL	FINAL	NET
1	5% HNO_3/10% H_2O_2	100	722.0	776.6	54.6
2	5% HNO_3/10% H_2O_2	100	675.8	690.4	14.6
3	Empty	0	591.0	597.5	6.5
4	4% $KMnO_4$/10% H_2SO_4	100	727.7	734.4	6.7
5	4% $KMnO_4$/10% H_2SO_4	100	731.7	739.2	7.5
6	Silica Gel	—	846.9	868.8	22.4
TOTAL					112.3

Description of Impinger Contents

SAMPLE RECOVERY DATA

PLANT Waupaca Foundry Run No. O-M29-2

DATE 9/10/97 Sample Box No. — Job No. S 414.003

SAMPLE LOCATION Outlet Filter No. 301640

TRAIN PREPARER M Hamilton

SAMPLE RECOVERY PERSON M Hamilton

COMMENTS Front half Acid Rinse → O-M29-2-FHAR

FRONT HALF

Acetone Container No. O-M29-2-FHAR Liquid Level Marked ✓ Sealed ✓

Filter Container No. O-M29-2-Filter Sealed ✓

Description of Filter Light Tan Rings

Samples Stored and Locked ✓

BACK HALF/MOISTURE

Container No. O-M29-2-5%10%; O-M29-2-BHAR; O-M29-2-KMnO4; O-M29-2-HCl

Liquid Level Marked ✓ Sealed ✓

IMP. NO.	CONTENTS	INITIAL VOL (ml)	WEIGHT (grams)		
			INITIAL	FINAL	NET
1	5% HNO3/10% H2O2	100	733.2	770.2	37.0
2	5% HNO3/10% H2O2	100	651.3	671.8	20.5
3	Empty	0	552.2	553.9	1.7
4	4% KMnO4/10% H2SO4	100	621.8 + 107.7 = 729.5	688.4	-41.1
5	4% KMnO4/10% H2SO4	100	623.8 + 107.7 = 731.5	769.7	38.2
6	Silica Gel	—	910.1	932.9	22.8
TOTAL					79.1

SAMPLE RECOVERY DATA

PLANT Waupaca Foundry Run No. O-M29-3

DATE 9/10/97 Sample Box No. — Job No. S414.003

SAMPLE LOCATION Outlet Filter No. 301632

TRAIN PREPARER M Hamilton

SAMPLE RECOVERY PERSON M Hamilton

COMMENTS Front Half Acid Rinse → O-M29-3-FHAR

FRONT HALF

Acetone Container No. O-M29-3-FHAR Liquid Level Marked ✓ Sealed ✓

Filter Container No. O-M29-3-Filter Sealed ✓

Description of Filter Light Tan Rings

Samples Stored and Locked ✓

BACK HALF/MOISTURE

Container No. O-M29-3-5%10% ; O-M29-3-BHAR ; O-M29-3-KMnO4 ; O-M29-3-HCl

Liquid Level Marked ✓ Sealed ✓

IMP. NO.	CONTENTS	INITIAL VOL (ml)	WEIGHT (grams)		
			INITIAL	FINAL	NET
1	5% HNO_3/10% H_2O_2	100	730.0	776.0	46.0
2	5% HNO_3/10% H_2O_2	100	680.5	691.9	11.4
3	Empty	0	592.5	595.2	2.7
4	4% $KMnO_4$/10% H_2SO_4	100	732.4	732.8	0.4
5	4% $KMnO_4$/10% H_2SO_4	100	730.1	730.3	0.2
6	Sil Gel	—	860.2	880.3	20.1
TOTAL					80.8

PES, Inc

4700 Duke Dr., Suite 150
Mason, OH 45040
513-398-2556

Date:	9/12/97
Lab:	Triangle Labs
Train:	Method 29 (Incl M5)

Plant Name: Waupaca Foundry Plant Location: Tell City, Indiana Project Name: S 414.003

Relinquished by: (Signature)	Date/Time	Received by: (Signature)	Date/Time	Comments
MARC HAMILTON				All M29 samples
		B Hurst	9/12/97 1500	All M29 samples
Bill Hurst	9/15/97 1000	Franklin Meadows FRANK MEADOWS - PES	9/15/97 1000	All M29 Filters and FH Acetone Rinses
Franklin Meadows FRANK MEADOWS, PES	9/23/97 845	Bill Hurst	9/23/97 0847	

Field Sample No.	Date	Composite or Grab	Analysis Required	Sampling Train	Sample Description	Special Notes	Lab
I-M29-1-Filter	9/9/97	Composite	EPA Method 5/ EPA Method 29	Particulate/MMtls	4" Quartz Filter	M 29 Container #1	TLI
I-M29-1-FHAce	9/9/97	Composite	EPA Method 5/ EPA Method 29	Particulate/MMtls	Front Half Acetone Rinse	M 29 Container #2 500 ml	TLI
I-M29-1-FHAR	9/9/97	Composite	EPA Method 29	MMtls	Front Half Acid Rinse 0.1N HNO3	M 29 Container #3	TLI
I-M29-1-H2O2	9/9/97	Composite	EPA Method 29	MMtls	5% HNO3 / 10% H2O2 Impinger+Rinse	M 29 Container #4	TLI
I-M29-1-BHAR	9/9/97	Composite	EPA Method 29	MMtls	Blank Imp. Acid Rinse 0.1N HNO3	M 29 Container #5A	TLI
I-M29-1-KMNO4	9/9/97	Composite	EPA Method 29	MMtls	4% KMnO4/10% H2S Impinger+Rinse	M 29 Container #5B	TLI
I-M29-1-HCL	9/9/97	Composite	EPA Method 29	MMtls	8N HCl	M 29 Container #5C	TLI
I-M29-2-Filter	9/10/97	Composite	EPA Method 5/ EPA Method 29	Particulate/MMtls	4" Quartz Filter	M 29 Container #1	TLI

X
X
X

PES, Inc

4700 Duke Dr., Suite 150
Mason, OH 45040
513-398-2556

Date:	9/12/97
Lab:	Triangle Labs
Train:	Method 29 (Incl M5)

Plant Name: Waupaca Foundry Plant Location: Tell City, Indiana Project Name: S 414.003

Relinquished by: (Signature)	Date/Time	Received by: (Signature)	Date/Time	Comments
Relinquished by: (Signature)	Date/Time	Received by: (Signature)	Date/Time	Comments
Relinquished by: (Signature)	Date/Time	Received by: (Signature)	Date/Time	Comments
Relinquished by: (Signature)	Date/Time	Received by: (Signature)	Date/Time	Comments

Field Sample No.	Date	Composite or Grab	Analysis Required	Sampling Train	Sample Description	Special Notes	Lab	
I-M29-2-FHAce	9/10/97	Composite	EPA Method 5/ EPA Method 29	Particulate/MMtls	Front Half Acetone Rinse	M 29 Container #2 500 ml	TLI	X
I-M29-2-FHAR	9/10/97	Composite	EPA Method 29	MMtls	Front Half Acid Rinse 0.1N HNO3	M 29 Container #3	TLI	
I-M29-2-H2O2	9/10/97	Composite	EPA Method 29	MMtls	5% HNO3 / 10% H2O2 Impinger+Rinse	M 29 Container #4	TLI	
I-M29-2-BHAR	9/10/97	Composite	EPA Method 29	MMtls	Blank Imp. Acid Rinse 0.1N HNO3	M 29 Container #5A	TLI	
I-M29-2-KMNO4	9/10/97	Composite	EPA Method 29	MMtls	4% KMnO4/10% H2S Impinger+Rinse	M 29 Container #5B	TLI	
I-M29-2-HCL	9/10/97	Composite	EPA Method 29	MMtls	8N HCl	M 29 Container #5C	TLI	
I-M29-3-Filter	9/10/97	Composite	EPA Method 5/ EPA Method 29	Particulate/MMtls	4" Quartz Filter	M 29 Container #1	TLI	X
I-M29-3-FHAce	9/10/97	Composite	EPA Method 5/ EPA Method 29	Particulate/MMtls	Front Half Acetone Rinse	M 29 Container #2 500 ml	TLI	X

PES, Inc

4700 Duke Dr., Suite 150
Mason, OH 45040
513-398-2556

Date:	9/12/97
Lab:	Triangle Labs
Train:	Method 29 (Incl M5)

Plant Name: Waupaca Foundry Plant Location: Tell City, Indiana Project Name: S 414.003

Relinquished by: (Signature)	Date/Time	Received by: (Signature)	Date/Time	Comments
Relinquished by: (Signature)	Date/Time	Received by: (Signature)	Date/Time	Comments
Relinquished by: (Signature)	Date/Time	Received by: (Signature)	Date/Time	Comments
Relinquished by: (Signature)	Date/Time	Received by: (Signature)	Date/Time	Comments

Field Sample No.	Date	Composite or Grab	Analysis Required	Sampling Train	Sample Description	Special Notes	Lab
I-M29-3-FHAR	9/10/97	Composite	EPA Method 29	MMtls	Front Half Acid Rinse	M 29 Container #3	TLI
			"	"	0.1N HNO3	"	"
I-M29-3-H2O2	9/10/97	Composite	EPA Method 29	MMtls	5% HNO3 / 10% H2O2	M 29 Container #4	TLI
			"	"	Impinger+Rinse	"	"
I-M29-3-BHAR	9/10/97	Composite	EPA Method 29	MMtls	Blank Imp. Acid Rinse	M 29 Container #5A	TLI
			"	"	0.1N HNO3	"	"
I-M29-3-KMnO4	9/10/97	Composite	EPA Method 29	MMtls	4% KMnO4/10% H2S	M 29 Container #5B	TLI
			"	"	Impinger+Rinse	"	"
I-M29-3-HCL	9/10/97	Composite	EPA Method 29	MMtls	8N HCl	M 29 Container #5C	TLI
			"	"	"	"	"
I-M29-BLK-Filter	9/10/97	Composite	EPA Method 5/ EPA Method 29	Particulate/MMtls	4" Quartz Filter	M 29 Container #1	TLI
			"	Field Blank	"	"	"
I-M29-BLK-FHAce	9/10/97	Composite	EPA Method 5/ EPA Method 29	Particulate/MMtls	Front Half	M 29 Container #2	TLI
			"	Field Blank	Acetone Rinse	" 125 ml	"
I-M29-BLK-FHAR	9/10/97	Composite	EPA Method 29	MMtls	Front Half Acid Rinse	M 29 Container #3	TLI
			"	Field Blank	0.1N HNO3	"	"

X
X

174

PES, Inc

4700 Duke Dr., Suite 150
Mason, OH 45040
513-398-2556

Date:	9/12/97
Lab:	Triangle Labs
Train:	Method 29 (Incl M5)

Plant Name: Waupaca Foundry

Plant Location: Tell City, Indiana

Project Name: S 414.003

Relinquished by: (Signature)	Date/Time	Received by: (Signature)	Date/Time	Comments
Relinquished by: (Signature)	Date/Time	Received by: (Signature)	Date/Time	Comments
Relinquished by: (Signature)	Date/Time	Received by: (Signature)	Date/Time	Comments
Relinquished by: (Signature)	Date/Time	Received by: (Signature)	Date/Time	Comments

Field Sample No.	Date	Composite or Grab	Analysis Required	Sampling Train	Sample Description	Special Notes	Lab
I-M29-BLK-H2O2	9/10/97	Composite	EPA Method 29	MMtls	5% HNO3 / 10% H2O2	M 29 Container #4	TLI
			"	Field Blank	Impinger+Rinse	"	"
I-M29-BLK-BHAR	9/10/97	Composite	EPA Method 29	MMtls	Blank Imp. Acid Rinse	M 29 Container #5A	TLI
			"	Field Blank	0.1N HNO3	"	"
I-M29-BLK-KMnO4	9/10/97	Composite	EPA Method 29	MMtls	4% KMnO4/10% H2S	M 29 Container #5B	TLI
			"	Field Blank	Impinger+Rinse	"	"
I-M29-BLK-HCL	9/10/97	Composite	EPA Method 29	MMtls	6N HCl	M 29 Container #5C	TLI
			"	Field Blank	"	"	"
"	"	"	"	"	"	"	"
			"	"	"	"	"
"	"	"	"	"	"	"	"
			"	"	"	"	"
"	"	"	"	"	"	"	"
			"	"	"	"	"
"	"	"	"	"	"	"	"
			"	"	"	"	"

PES, Inc

4700 Duke Dr., Suite 150
Mason, OH 45040
513-398-2556

Date:	9/12/97
Lab:	Triangle Labs
Train:	Method 29 (Incl M5)

Plant Name: Waupaca Foundry Plant Location: Tell City, Indiana Project Name: S 414.003

Relinquished by: (Signature)	Date/Time	Received by: (Signature)	Date/Time	Comments
Relinquished by: (Signature)	Date/Time	Received by: (Signature)	Date/Time	Comments
Relinquished by: (Signature)	Date/Time	Received by: (Signature)	Date/Time	Comments
Relinquished by: (Signature)	Date/Time	Received by: (Signature)	Date/Time	Comments

Field Sample No.	Date	Composite or Grab	Analysis Required	Sampling Train	Sample Description	Special Notes	Lab	
O-M29-1-Filter	9/9/97	Composite	EPA Method 5/ EPA Method 29	Particulate/MMtls	3" Quartz Filter	M 29 Container #1	TLI	X
O-M29-1-FHAce	9/9/97	Composite	EPA Method 5/ EPA Method 29	Particulate/MMtls	Front Half Acetone Rinse	M 29 Container #2 145 ml	TLI	X
O-M29-1-FHAR	9/9/97	Composite	EPA Method 29	MMtls	Front Half Acid Rinse 0.1N HNO3	M 29 Container #3	TLI	
O-M29-1-H2O2	9/9/97	Composite	EPA Method 29	MMtls	5% HNO3 / 10% H2O2 Impinger+Rinse	M 29 Container #4	TLI	
O-M29-1-BHAR	9/9/97	Composite	EPA Method 29	MMtls	Blank Imp. Acid Rinse 0.1N HNO3	M 29 Container #5A	TLI	
O-M29-1-KMNO4	9/9/97	Composite	EPA Method 29	MMtls	4% KMnO4/10% H2S Impinger+Rinse	M 29 Container #5B	TLI	
O-M29-1-HCL	9/9/97	Composite	EPA Method 29	MMtls	8N HCl	M 29 Container #5C	TLI	
O-M29-2-Filter	9/10/97	Composite	EPA Method 5/ EPA Method 29	Particulate/MMtls	3" Quartz Filter	M 29 Container #1	TLI	X

PES, Inc

4700 Duke Dr., Suite 150
Mason, OH 45040
513-398-2556

Date:	9/12/97
Lab:	Triangle Labs
Train:	Method 29 (Incl M5)

Plant Name: Waupaca Foundry Plant Location: Tell City, Indiana Project Name: S 414.003

Relinquished by: (Signature)	Date/Time	Received by: (Signature)	Date/Time	Comments
Relinquished by: (Signature)	Date/Time	Received by: (Signature)	Date/Time	Comments
Relinquished by: (Signature)	Date/Time	Received by: (Signature)	Date/Time	Comments
Relinquished by: (Signature)	Date/Time	Received by: (Signature)	Date/Time	Comments

Field Sample No.	Date	Composite or Grab	Analysis Required	Sampling Train	Sample Description	Special Notes	Lab	
O-M29-2-FHAce	9/10/97	Composite	EPA Method 5/ EPA Method 29	Particulate/MMtls	Front Half Acetone Rinse	M 29 Container #2 130 ml	TLI	X
O-M29-2-FHAR	9/10/97	Composite	EPA Method 29	MMtls	Front Half Acid Rinse 0.1N HNO3	M 29 Container #3	TLI	
O-M29-2-H2O2	9/10/97	Composite	EPA Method 29	MMtls	5% HNO3 / 10% H2O2 Impinger+Rinse	M 29 Container #4	TLI	
O-M29-2-BHAR	9/10/97	Composite	EPA Method 29	MMtls	Blank Imp. Acid Rinse 0.1N HNO3	M 29 Container #5A	TLI	
O-M29-2-KMNO4	9/10/97	Composite	EPA Method 29	MMtls	4% KMnO4/10% H2S Impinger+Rinse	M 29 Container #5B	TLI	
O-M29-2-HCL	9/10/97	Composite	EPA Method 29	MMtls	8N HCl	M 29 Container #5C	TLI	
O-M29-3-Filter	9/10/97	Composite	EPA Method 5/ EPA Method 29	Particulate/MMtls	3" Quartz Filter	M 29 Container #1	TLI	X
O-M29-3-FHAce	9/10/97	Composite	EPA Method 5/ EPA Method 29	Particulate/MMtls	Front Half Acetone Rinse	M 29 Container #2 150 ml	TLI	X

PES, Inc

4700 Duke Dr., Suite 150
Mason, OH 45040
513-398-2556

Date:	9/12/97
Lab:	Triangle Labs
Train:	Method 29 (Incl M5)

Plant Name: Waupaca Foundry Plant Location: Tell City, Indiana Project Name: S 414.003

Relinquished by: (Signature)	Date/Time	Received by: (Signature)	Date/Time	Comments
Relinquished by: (Signature)	Date/Time	Received by: (Signature)	Date/Time	Comments
Relinquished by: (Signature)	Date/Time	Received by: (Signature)	Date/Time	Comments
Relinquished by: (Signature)	Date/Time	Received by: (Signature)	Date/Time	Comments

Field Sample No.	Date	Composite or Grab	Analysis Required	Sampling Train	Sample Description	Special Notes	Lab
O-M29-3-FHAR	9/10/97	Composite	EPA Method 29	MMtls	Front Half Acid Rinse	M 29 Container #3	TLI
			"	"	0.1N HNO3	"	"
O-M29-3-H2O2	9/10/97	Composite	EPA Method 29	MMtls	5% HNO3 / 10% H2O2	M 29 Container #4	TLI
			"	"	Impinger+Rinse	"	"
O-M29-3-BHAR	9/10/97	Composite	EPA Method 29	MMtls	Blank Imp. Acid Rinse	M 29 Container #5A	TLI
			"	"	0.1N HNO3	"	"
O-M29-3-KMnO4	9/10/97	Composite	EPA Method 29	MMtls	4% KMnO4/10% H2S	M 29 Container #5B	TLI
			"	"	Impinger+Rinse	"	"
O-M29-3-HCL	9/10/97	Composite	EPA Method 29	MMtls	8N HCl	M 29 Container #5C	TLI
			"	"	"	"	"
O-M29-BLK-Filter	9/10/97	Composite	EPA Method 5/ EPA Method 29	Particulate/MMtls	3" Quartz Filter	M 29 Container #1	TLI
			"	Field Blank	"	"	"
O-M29-BLK-FHAce	9/10/97	Composite	EPA Method 5/ EPA Method 29	Particulate/MMtls	Front Half	M 29 Container #2	TLI
			"	Field Blank	Acetone Rinse	" 60 ml	"
O-M29-BLK-FHAR	9/10/97	Composite	EPA Method 29	MMtls	Front Half Acid Rinse	M 29 Container #3	TLI
			"	Field Blank	0.1N HNO3	"	"

X
X

73

PES, Inc

4700 Duke Dr., Suite 150
Mason, OH 45040
513-398-2556

Date:	9/12/97
Lab:	Triangle Labs
Train:	Method 29 (Incl M5)

Plant Name: Waupaca Foundry

Plant Location: Tell City, Indiana

Project Name: S 414.003

Relinquished by: (Signature)	Date/Time	Received by: (Signature)	Date/Time	Comments
Relinquished by: (Signature)	Date/Time	Received by: (Signature)	Date/Time	Comments
Relinquished by: (Signature)	Date/Time	Received by: (Signature)	Date/Time	Comments
Relinquished by: (Signature)	Date/Time	Received by: (Signature)	Date/Time	Comments

Field Sample No.	Date	Composite or Grab	Analysis Required	Sampling Train	Sample Description	Special Notes	Lab
O-M29-BLK-H2O2	9/10/97	Composite	EPA Method 29	MMtls	5% HNO3 / 10% H2O2	M 29 Container #4	TLI
			"	Field Blank	Impinger+Rinse	"	"
O-M29-BLK-BHAR	9/10/97	Composite	EPA Method 29	MMtls	Blank Imp. Acid Rinse	M 29 Container #5A	TLI
			"	Field Blank	0.1N HNO3	"	"
O-M29-BLK-KMnO4	9/10/97	Composite	EPA Method 29	MMtls	4% KMnO4/10% H2S	M 29 Container #5B	TLI
			"	Field Blank	Impinger+Rinse	"	"
O-M29-BLK-HCL	9/10/97	Composite	EPA Method 29	MMtls	8N HCl	M 29 Container #5C	TLI
			"	Field Blank	"	"	"
"	"	"	"	"	"	"	"
			"	"	"	"	"
"	"	"	"	"	"	"	"
			"	"	"	"	"
"	"	"	"	"	"	"	"
			"	"	"	"	"
"	"	"	"	"	"	"	"
			"	"	"	"	"

PES, Inc

4700 Duke Dr., Suite 150
Mason, OH 45040
513-398-2556

Date:	9/12/97
Lab:	Triangle Labs
Train:	Method 29 (Incl M5)

Plant Name: Waupaca Foundry Plant Location: Tell City, Indiana Project Name: S 414.003

Relinquished by: (Signature)	Date/Time	Received by: (Signature)	Date/Time	Comments
Relinquished by: (Signature)	Date/Time	Received by: (Signature)	Date/Time	Comments
Relinquished by: (Signature)	Date/Time	Received by: (Signature)	Date/Time	Comments
Relinquished by: (Signature)	Date/Time	Received by: (Signature)	Date/Time	Comments

Field Sample No.	Date	Composite or Grab	Analysis Required	Sampling Train	Sample Description	Special Notes	Lab
M29-Reagent Blank-4" Filter	9/10/97	Composite	EPA Method 5/ EPA Method 29	Particulate/MMtls	4" Quartz Filter		TLI
			"	Reagent Blank	"	"	"
M29-Reagent Blank-3" Filter	9/10/97	Composite	EPA Method 5/ EPA Method 29	Particulate/MMtls	3" Quartz Filter		TLI
			"	Reagent Blank	"	"	"
M29-Reagent Blank-Acetone	9/10/97	Composite	EPA Method 5/ EPA Method 29	Particulate/MMtls	100 ml Acetone		TLI
			"	Reagent Blank	"	100 ml "	"
M29-Reagent Blank-HNO3/H2O2	9/10/97	Composite	EPA Method 29	MMTL	250 ml 5% HNO		TLI
			"	Reagent Blank	10% H2O2	"	"
M29-Reagent Blank-0.1N HNO3	9/10/97	Composite	EPA Method 29	MMTL	160 ml 0.1N HNO3		TLI
			"	Reagent Blank	"	"	"
M29-Reagent Blank-KMnO4/H2SO4	9/10/97	Composite	EPA Method 29	MMTL	500 ml 4% KMnO		TLI
			"	Reagent Blank	10% H2SO4	"	"
M29-Reagent Blank-8N HCL	9/10/97	Composite	EPA Method 29	MMTL	100 ml 8N HCl		TLI
			"	Reagent Blank	"	"	"
M29-Reagent Blank-DI H2O	9/10/97	Composite	EPA Method 29	MMTL	330 ml DI Water		TLI
			"	Reagent Blank	"	"	"

X
X
X

80

-- LOG IN RECORD/CHAIN OF CUSTODY

Chain of Custody : Present
Sample Tags : Absent
Sample Tag Numbers: Not Listed on Chain of Custody
SMO Forms : N/A

Sample Seals: Absent
Container...: Intact

COPY KM 9/12/97

TLI Project Number 43231
Client: PES03 - Pacific Environmental Services

Book 183

Date Received 09/12/97 By

Ice Chest ICE Temp 5.0 C

Carrier and Number MICHAEL MILBORNE

3

TLI Number.. mR/H:CPM.	Client Sample ID..... Client COC ID.....*	Matrix Location.....	To LAB Date/Init	To STORAGE Date/Init	To LAB Date/Init	To STORAGE Date/Init	To LAB Date/Init	To STORAGE Date/Init	To LAB Date/Init	To STORAGE Date/Init	DISPOSED Date/Init
183-3-1A	I-M29-FHAce I-M29-BLK *	ACETONE RNS METALS LAB									
183-3-1B	I-M29-FHAR I-M29-BLK *	.1N HNO3 METALS LAB									
183-3-1C	I-M29-BLK-5% 10% I-M29-BLK *	HNO3/H2O2 METALS LAB									
183-3-1D	I-M29-BLK-BHAR I-M29-BLK *	.1N HNO3 METALS LAB									
183-3-1E	I-M29-BLK-KMNO4 I-M29-BLK *	KMnO4 METALS LAB									
183-3-1F	I-M29-BLK-HCL I-M29-BLK *	8N HCl METALS LAB									
183-3-2A	I-M29-1-FHAce I-M29-1 *	ACETONE RNS METALS LAB									
183-3-2B	I-M29-1-FHAR I-M29-1 *	.1N HNO3 METALS LAB									
183-3-2C	I-M29-1-5% 10% I-M29-1 *	HNO3/H2O2 METALS LAB.									
183-3-2D	I-M29-1-BHAR I-M29-1 *	.1N HNO3 METALS LAB									
183-3-2E	I-M29-1-KMNO4 I-M29-1 *	KMnO4 METALS LAB									
183-3-2F	I-M29-1-HCL I-M29-1 *	8N HCl METALS LAB									
183-3-3A	I-M29-2-FHAce I-M29-2 *	ACETONE RNS METALS LAB									
183-3-3B	I-M29-2-FHAR I-M29-2 *	.1N HNO3 METALS LAB									

Receiving Remarks: FILTERS (FOR ALL INLET AND OUTLET METHOD 29'S) AND REAGENT BLANKS WERE NOT RECEIVED WITH SAMPLES. THE SAMPLES FOR INLET (FHAce and FHAR) AND OUTLET (FHAce and FHAR) BLANKS WERE NOT MARKED BLK AS OTHER BLANKS.

Archive Remarks:

TRIANGLE LABORATORIES, INC. -- LOG IN RECORD/CHAIN OF CUSTODY

Custody Seal : Absent	Sample Seals: Absent	TLI Project Number 43231	Book
Chain of Custody : Present	Container...: Intact	Client: PES03 - Pacific Environmental Services	
Sample Tags : Absent			183
Sample Tag Numbers: Not Listed on Chain of Custody		Date Received 09/12/97 By	Page
SMO Forms : N/A			
Ice Chest ICE Temp 5.0 C		Carrier and Number MICHAEL MILBORNE	3

TLI Number.. mR/H:CPM.	....Client Sample ID..... .....Client COC ID.....*	.....Matrix Location.....	To LAB Date/Init	To STORAGE Date/Init	To LAB Date/Init	To STORAGE Date/Init	To LAB Date/Init	To STORAGE Date/Init	To LAB Date/Init	To STORAGE Date/Init	DISPOSED Date/Init
183-3-3C	I-M29-2-5% 10% I-M29-2 *	HNO3/H2O2 METALS LAB									
183-3-3D	I-M29-2-BHAR I-M29-2 *	.1N HNO3 METALS LAB									
183-3-3E	I-M29-2-KMNO4 I-M29-2 *	KMnO4 METALS LAB									
183-3-3F	I-M29-2-HCL I-M29-2 *	8N HCl METALS LAB									
183-3-4A	I-M29-3-FHAce I-M29-3 *	ACETONE RNS METALS LAB									
183-3-4B	I-M29-3-FHAR I-M29-3 *	.1N HNO3 METALS LAB									
183-3-4C	I-M29-3-5% 10% I-M29-3 *	HNO3/H2O2 METALS LAB									
183-3-4D	I-M29-3-BHAR I-M29-3 *	.1N HNO3 METALS LAB.									
183-3-4E	I-M29-3-KMNO4 I-M29-3 *	KMnO4 METALS LAB									
183-3-4F	I-M29-3-HCL I-M29-3 *	8N HCl METALS LAB									
183-3-5A	O-M29-FHAce O-M29-BLK *	ACETONE RNS METALS LAB									
183-3-5B	O-M29-FHAR O-M29-BLK *	.1N HNO3 METALS LAB									
183-3-5C	O-M29-BLK-5% 10% O-M29-BLK *	HNO3/H2O2 METALS LAB									
183-3-5D	O-M29-BLK-BHAR O-M29-BLK *	.1N HNO3 METALS LAB									

Receiving Remarks: FILTERS (FOR ALL INLET AND OUTLET METHOD 29'S) AND REAGENT BLANKS WERE NOT RECEIVED WITH SAMPLES. THE SAMPLES FOR INLET (FHAce and FHAR) AND OUTLET (FHAce and FHAR) BLANKS WERE NOT MARKED BLK AS OTHER BLANKS.

Archive Remarks:

TRIANGLE LABORATORIES, INC. -- LOG IN RECORD/CHAIN OF CUSTODY

Custody Seal : Absent
Chain of Custody : Present
Sample Tags : Absent
Sample Tag Numbers: Not Listed on Chain of Custody
SMO Forms : N/A

Sample Seals: Absent
Container...: Intact

TLI Project Number 43231
Client: PES03 - Pacific Environmental Services

Date Received 09/12/97 By

Book 183
Page 3

Ice Chest ICE Temp 5.0 C

Carrier and Number MICHAEL MILBORNE

TLI Number.. mR/H:CPM.	Client Sample ID..... Client COC ID.....	*	Matrix Location.....	To LAB Date/Init	To STORAGE Date/Init	To LAB Date/Init	To STORAGE Date/Init	To LAB Date/Init	To STORAGE Date/Init	To LAB Date/Init	To STORAGE Date/Init	DISPOSED Date/Init
183-3-5E	O-M29-BLK-KMNO4 O-M29-BLK	*	KMnO4 METALS LAB									
183-3-5F	O-M29-BLK-HCL O-M29-BLK	*	8N HCl METALS LAB									
183-3-6A	O-M29-1-FHAce O-M29-RUN1	*	ACETONE RNS METALS LAB									
183-3-6B	O-M29-1-FHAR O-M29-RUN1	*	.1N HNO3 METALS LAB									
183-3-6C	O-M29-1-5% 10% O-M29-RUN1	*	HNO3/H2O2 METALS LAB									
183-3-6D	O-M29-1-BHAR O-M29-RUN1	*	.1N HNO3 METALS LAB									
183-3-6E	O-M29-1-KMNO4 O-M29-RUN1	*	KMnO4 METALS LAB									
183-3-6F	O-M29-1-HCL O-M29-RUN1	*	8N HCl METALS LAB									
183-3-7A	O-M29-2-FHAce O-M29-RUN2	*	ACETONE RNS METALS LAB									
183-3-7B	O-M29-2-FHAR O-M29-RUN2	*	.1N HNO3 METALS LAB									
183-3-7C	O-M29-2-5% 10% O-M29-RUN2	*	HNO3/H2O2 METALS LAB									
183-3-7D	O-M29-2-BHAR O-M29-RUN2	*	.1N HNO3 METALS LAB									
183-3-7E	O-M29-2-KMNO4 O-M29-RUN2	*	KMnO4 METALS LAB									
183-3-7F	O-M29-2-HCL O-M29-RUN2	*	8N HCl METALS LAB									

Receiving Remarks: FILTERS (FOR ALL INLET AND OUTLET METHOD 29'S) AND REAGENT BLANKS WERE NOT RECEIVED WITH SAMPLES. THE SAMPLES FOR INLET (FHAce and FHAR) AND OUTLET (FHAce and FHAR) BLANKS WERE NOT MARKED BLK AS OTHER BLANKS.

Archive Remarks:

COPY

TRIANGLE LABORATORIES, INC. -- LOG IN RECORD/CHAIN OF CUSTODY

Custody Seal : Absent
Chain of Custody : Present
Sample Tags : Absent
Sample Tag Numbers: Not Listed on Chain of Custody
SMO Forms : N/A

Sample Seals: Absent
Container...: Intact

TLI Project Number 43231
Client: PES03 - Pacific Environmental Services

Date Received 09/12/97 By

Ice Chest ICE Temp 5.0 C

Carrier and Number MICHAEL MILBORNE

Book 183 Page 3

TLI Number.. mR/H:CPM.	Client Sample ID..... .....Client COC ID.....*	Matrix Location.....	To LAB Date/Init	To STORAGE Date/Init	To LAB Date/Init	To STORAGE Date/Init	To LAB Date/Init	To STORAGE Date/Init	To LAB Date/Init	To STORAGE Date/Init	DISPOSED Date/Init
183-3-8A	O-M29-3-FHAce O-M29-RUN3 *	ACETONE RNS METALS LAB									
183-3-8B	O-M29-3-FHAR O-M29-RUN3 *	.1N HNO3 METALS LAB									
183-3-8C	O-M29-3-5% 10% O-M29-RUN3 *	HNO3/H2O2 METALS LAB									
183-3-8D	O-M29-3-BHAR O-M29-RUN3 *	.1N HNO3 METALS LAB									
183-3-8E	O-M29-3-KMNO4 O-M29-RUN3 *	KMnO4 METALS LAB									
183-3-8F	O-M29-3-HCL O-M29-RUN3 *	8N HCl METALS LAB									

Receiving Remarks: FILTERS (FOR ALL INLET AND OUTLET METHOD 29'S) AND REAGENT BLANKS WERE NOT RECEIVED WITH SAMPLES. THE SAMPLES FOR INLET (FHAce and FHAR) AND OUTLET (FHAce and FHAR) BLANKS WERE NOT MARKED BLK AS OTHER BLANKS.

Archive Remarks:

84

COPY 9/15/97

TRIANGLE LABORATORIES, INC. -- LOG IN RECORD/CHAIN OF CUSTODY

Custody Seal : Absent
Chain of Custody : Absent
Sample Tags : Absent
Sample Tag Numbers: Not Listed on Chain of Custody
SMO Forms : N/A

Sample Seals: Absent
Container...: Intact

TLI Project Number 43243
Client: PES03 - Pacific Environmental Services

Date Received 09/15/97 By [illegible]

Box NO COOLANT

Carrier and Number BILL DEWEE

Book 183
Page 15

TLI Number.. mR/H:CPM.	Client Sample ID..... .....Client COC ID.....*	Matrix Location.....	To LAB Date/Init	To STORAGE Date/Init	To LAB Date/Init	To STORAGE Date/Init	To LAB Date/Init	To STORAGE Date/Init	To LAB Date/Init	To STORAGE Date/Init	DISPOSED Date/Init
183-15-1A	Reagent Blank	ACETONE RNS METALS LAB									
183-15-1B	Reagent Blank	.1N HN03 METALS LAB									
183-15-1C	Reagent Blank	DI WATER METALS LAB									
183-15-1D	Reagent Blank	HNO3/H2O2 METALS LAB									
183-15-1E	Reagent Blank	HCl METALS LAB									

Receiving Remarks: KMN04 sample arrived broke.picked it.up and it had no bottom ,sample hadleaked out into box.See TLI#43231.

Archive Remarks:

Form Revised 05/27/1997 -- Page 1 OF 1

85

TRIANGLE LABORATORIES, INC. -- LOG IN RECORD/CHAIN OF CUSTODY

Custody Seal : Absent	Sample Seals: Absent	TLI Project Number 43350	Book
Chain of Custody : Present	Container...: Intact	Client: PES01 - Pacific Environmentals Serv. Inc.	
Sample Tags : Absent			184
Sample Tag Numbers: Not Listed on Chain of Custody			
SMO Forms : N/A		Date Received 09/23/97 By	Page
Box	NO COOLANT	Carrier and Number FRANK MEADOWS	23

TLI Number.. mR/H:CPM.	....Client Sample ID..... .....Client COC ID.....*	.....Matrix Location.....	To LAB Date/Init	To STORAGE Date/Init	To LAB Date/Init	To STORAGE Date/Init	To LAB Date/Init	To STORAGE Date/Init	To LAB Date/Init	To STORAGE Date/Init	DISPOSED Date/Init
184-23-1A	I-M29-1	Filter									
	I-M29-1	METALS LAB									
184-23-1B	I-M29-1	FH Acetone Rinse									
	I-M29-1	METALS LAB									
184-23-2A	I-M29-2	Filter									
	I-M29-2	METALS LAB									
184-23-2B	I-M29-2	FH Acetone Rinse									
	I-M29-2	METALS LAB									
184-23-3A	I-M29-3	Filter									
	I-M29-3	METALS LAB									
184-23-3B	I-M29-3.	FH Acetone Rinse									
	I-M29-3	METALS LAB									
184-23-4A	I-M29-FIELD BLANK	Filter									
	I-M29-FIELD BLANK	METALS LAB									
184-23-4B	I-M29-FIELD BLANK	FH Acetone Rinse									
	I-M29-FIELD BLANK	METALS LAB									
184-23-5	I-M29-REAGENT BLANK	FILTER									
	I-M29-REAGENT BLANK	METALS LAB									
184-23-6A	O-M29-1	Filter									
	O-M29-1	METALS LAB									
184-23-6B	O-M29-1	FH Acetone Rinse									
	O-M29-1	METALS LAB									
184-23-7A	O-M29-2	Filter									
	O-M29-2	METALS LAB									
184-23-7B	O-M29-2	FH Acetone Rinse									
	O-M29-2	METALS LAB									
184-23-8A	O-M29-3	Filter									
	O-M29-3	METALS LAB									

Receiving Remarks:

Archive Remarks:

98

TRIANGLE LABORATORIES, INC. -- LOG IN RECORD/CHAIN OF CUSTODY

Custody Seal : Absent
Chain of Custody : Present
Sample Tags : Absent
Sample Tag Numbers: Not Listed on Chain of Custody
SMO Forms : N/A

Sample Seals: Absent
Container...: Intact

TLI Project Number 43350
Client: PES01 - Pacific Environmentals Serv. Inc.

Date Received 09/23/97 By

Book 184

Page 23

Box NO COOLANT

Carrier and Number FRANK MEADOWS

TLI Number.. mR/H:CPM.	Client Sample ID..... Client COC ID.....*	Matrix Location.....	To LAB Date/Init	To STORAGE Date/Init	To LAB Date/Init	To STORAGE Date/Init	To LAB Date/Init	To STORAGE Date/Init	To LAB Date/Init	To STORAGE Date/Init	DISPOSED Date/Init
184-23-8B	O-M29-3	FH Acetone Rinse									
	O-M29-3	METALS LAB									
184-23-9A	O-M29-FIELD BLANK	Filter									
	O-M29-FIELD BLANK	METALS LAB									
184-23-9B	O-M29-FIELD BLANK	FH Acetone Rinse									
	O-M29-FIELD BLANK	METALS LAB									
184-23-10A	O-M29-REAGENT BLANK	Filter									
	O-M29-REAGENT BLANK	METALS LAB									
184-23-10B	O-M29-REAGENT BLANK	FH Acetone Rinse									
	O-M29-REAGENT BLANK	METALS LAB									

Receiving Remarks:

Archive Remarks:

Project # 4523i
Client: Pacific Environmental Services
Date/Int.: DSE 9/24/97
Client Run # 2-M-29-Blank

Triangle Laboratories of RTP
(919) 544-5729

Analytes			
ICP	GFAA	FLAA	CVAA
Ag, Ba, Mn, Ni, P, Zn	As, Be, Cd, Co, Cr, Pb, Sb, Se, Tl		Hg

CONT # ~~1~~
Filter
Type: G or Q
label ____

CONT # ~~2~~
Acetone Rinse
label ~~183-3-1A~~
Volume ~~180~~ use 2 DSE 9/24/97

CONT # 3
HNO3 Rinse
use 80
label 183-3-1B
Volume 180 =TV

CONT # 4
Back Half Impinger
use 1B = 100, 1C = 200
label 183-3-1C
Volume 320 =TV

Hg Impingers

CONT # 5A
HNO3
label 183-3-1D
Volume 61 ml
Aliquot A 5
Aliquot B 5
Int DSE
Date 9/29/97

CONT # 5B
KMNO4
label 183-3-1E
Volume 243 ml
Aliquot A 5
Aliquot B 5
Int DSE
Date 9/29/97

CONT # 5C
HCl TV IF = 105
label 183-3-1E
Volume 10 ml
Aliquot A 5
Aliquot B 5
Int DSE
Date 9/29/97

(Duplicate Analysis of Eac

Dessicate to dryness and redissolve in 10ml con HNO3 — Int ____ Date ____

Reduce volume to 20 ml on holplate — Int SE — Date 9-25-97

For Metals: label ~~300~~ 183-3-1C, Volume ~~183-3-1C~~
For Hg: label 183-3-1C, Volume 100

Microwave dig with conc. HF and conc. HNO3 — Int DSE — Date 9/26/97
label 183-3-1B

Microwave dig with conc. HF and conc. HNO3 — Int ____ Date ____

Combine digestates

Front Half Digestate

Add ~~500~~ uL Sc

Dilute to 100 mls — Int DSE — Date 9/26/97
label 183-3-1B
Volume 100 ML

For Metal
label 183-3-1B
Int DSE
Volume 100 Date 9/26/97
post digest spike on FH (for GFAA))

For Hg
label 183-3-1B Int DSE
Volume 100 ml Date 9/29/97

FH & BH Post dig. spk.
00 ppb (Instrument spiked)

Aliquot A: 5 mL
(No spike required)
Aliquot B: 5 mL

Reduce Volume to 20 mL on Holplate — Int. SE — Date 9/25/97

Holplate dig with HNO3 and H202 — Int. DSE — Date 9/26/97

Add 500 uL Sc — Int. ____ Date ____

Dilute to 100 mls — Int. DSE — Date 9/26/97

label 183-3-1BC
Int DSE
Volume 100 Date 9/26/97
(One post digestion spk on BH for GFAA)

Sample
label 183-3-1C Int DSE
Volume 100 Date 9/29/97
Aliquot A: 5
Aliquot B: 5 10/10/97

Spike
(1 BH Hg Spike required)
label 183-3-1BC Int ME
Volume 100 Date 10/10/97
Aliquot A: 5
Aliquot B: 5
spk 5 ml of 100 ppb — Int MR
final spk conc. added 5 ppb — Date 10/10/97

FH & BH Serial dilution performed
____ ml to ____ ml FV + ____ uL Sc
Initials: ____
Date:

Project # 43231

Client: _____

Date/Int.: _____

Client Run# I-M29-FIELD BLANK

Triangle Laboratories of RTP
(919) 544-5729

Analytes: ICP | GFAA | FLAA | CVAA

CONT # 1 — Filter type: G or Q — label 184-23-4A

CONT # 2 — Acetone Rinse — label 184-23-4B — Volume DRY

CONT # ~~3~~ — HNO3 Rinse — label ____ — Volume ____

CONT # ~~4~~ — Back Half Impinger — label ____ — Volume ____

Hg Impingers

CONT # ~~5A~~ HNO3 — label ____ — Volume ____ ml — Aliquot A ____ — Aliquot B ____ — Int ____ — Date ____

CONT # ~~5B~~ KMNO4 — label ____ — Volume ____ ml — Aliquot A ____ — Aliquot B ____ — Int ____ — Date ____

CONT # ~~5C~~ HCl — label ____ — Volume ____ ml — Aliquot A ____ — Aliquot B ____ — Int ____ — Date ____

~~Dessicate to dryness and~~ redissolve in 10ml con HNO3 — Int SRB — Date 10/2/97

Reduce volume to 20 ml on hotplate — Int ____ — Date ____

Microwave dig with conc. HF and conc. HNO3 — Int SRB — Date 10/3/97 — label 184-23-4B

Microwave dig with conc. HF conc. HNO3 — Int SRB — Date 10/3/97

Combine digestates

Front Half Digestate

Add 500 uL Sc

Dilute to 100 mls — Int SRB — Date 10/3/97

label 184-23-4AB

Volume 100 ML

For Metal — label 184-23-4AB — Int SRB — Volume 100 — Date 10/3/97

(post digest spike on FH for GFAA))

For Hg — label 184-23-4B — Int ME — Volume 100 ml — Date 10/6/97

Aliquot A: 5 ml

(No spike required)

Aliquot B: 5 ml

FH & BH Post dig. spk.

60 ppb (Instrument spiked)

For Metals — label ____ — Volume ____

For Hg — label ____ — Volume ____

Reduce Volume to 20 mL on Hotplate — Int. ____ — Date ____

Hotplate dig with HNO3 and H202 — Int. ____ — Date ____

Add 500 uL Sc — Int. ____ — Date ____

Dilute to 100 mls — Int. ____ — Date ____

label ____ — Volume ____ — Int ____ — Date ____

(One post digestion spk on BH for GFAA)

(Duplicate Analysis of Eac

Sample — label ____ — Int ____ — Volume ____ — Date ____ — Aliquot A: ____ — Aliquot B: ____

Spike (1 BH,Hg Spike required) — label ____ — Int ____ — Volume ____ — Date ____ — Aliquot A: ____ — Aliquot B: ____

spk ____ ml of ____ ppb — Int ____

final spk conc. added ____ ppb — Date ____

FH & BH Serial dilution performed

____ ml to ____ ml FV + ____ uL Sc

Initials: _____

Date:

Project # 4 3 2 2 !

Client: PES03

Date/Int.: DSE / 9/24/97

Client Run# I-M29-1 Run#1

Triangle Laboratories of RTP

(919) 544-5729

Analytes: ICP | GFAA | FLAA | CVAA

CONT # 1 — Filter Type: G or Q — label ____

CONT # 2 — Acetone Rinse — label ~~183-3-2A~~ EE SRB 9/25/97 — Volume ____

CONT # 3 — HNO3 Rinse — label 183-3-2B — Volume ~~410~~ 370

CONT # 4 — Back Half Impinger — label 183-3-2C — Volume 410

Hg Impingers

CONT # 5A — HNO3 — label 183-3-2D — Volume 100 ml — Aliquot A 5 — Aliquot B 5 — Int DSE — Date 9/29/97

CONT # 5B — KMNO4 — label 183-3-2E — Volume 370 ml — Aliquot A 5 — Aliquot B 5 — Int DSE — Date 9/29/97

CONT # 5C — HCl — label 183-3-2F — Volume 21 ml — Aliquot A 5 — Aliquot B 5 — Int DSE — Date 9/29/97

(Duplicate Analysis of Eac

Dessicate to dryness and redissolve in 10ml con HNO3 — Int ____ — Date ____

Reduce volume to 20 ml on hotplate — Int SF — Date 9-25-97

Microwave dig with conc. HF and conc. HNO3 — Int DSE — Date 9/26/97 — label 183-3-2B

Microwave dig with conc. HF and conc. HNO3 — Int ____ — Date ____

Combine digestates

Front Half Digestate

Add ~~500~~ uL Sc

Dilute to 100 mls — Int DSE — Date 9/26/97

label 183-3-2B — Volume 100 ML

For ~~Hg~~ Metals

label 183-3-2B — Int DSE — Volume 100 ml — Date 9/26/97

post digest spike on FH for GFAA))

FH & BH Post dig. spk. — 0 ppb (Instrument spiked)

Aliquot A: 5 mL (No spike required)

Aliquot B: 5 mL

For Metals — For Hg

label 183-3-2C — Volume 310

label 183-3-2C — Volume 100

Reduce Volume to 20 mL on Hotplate — Int. SF — Date 9-25-97

Hotplate dig with HNO3 and H202 — Int. DSE — Date 9/26/97

Add 500 uL Sc — Int. ____ — Date ____

Dilute to 100 mls — Int. DSE — Date 9/26/97

label 183-3-2C — Int DSE — Volume 100 — Date 9/26/97

(One post digestion spk on BH for GFAA)

Sample — Spike (1 BH Hg Spike required)

label 183-3-2D — Int DSE — Volume 100 — Date 9/29/97

Aliquot A: 5

Aliquot B: 5

label 183-3-2C — Int DSE — Volume 100 — Date 9/29/97

Aliquot A: 5

Aliquot B: 5

Reprocess Sample 183-3-2E spiked spike 5 ml of 100 ppb final spk conc added 5 ppb DSE 9/30/97

spk 5 ml of 100 ppb — Int DSE — final spk conc. added 5 ppb — Date 9/29/97

FH & BH Serial dilution performed

____ ml to ____ ml FV + ____ uL Sc

Initials: ____

Date: ____

Project # 43231

Client: Pacific Environmental

Date/Int.: October 2, 1997 SRB

Client Run# I-M29-1

Triangle Laboratories of RTP

(919) 544-5729

Analytes			
ICP	GFAA	FLAA	CVAA

CONT # 1

Filter
ype: G or Q

label 184-23-1A

CONT # 2

Acetone Rinse

label 184-23-1B

Volume DRY

CONT # ~~3~~

HNO3 Rinse

label ____

Volume ____

CONT # ~~4~~

Back Half Impinger

label ____

Volume ____

Hg Impingers

CONT # ~~5A~~ HNO3

label ____

Volume ____ ml

Aliquot A ____

Aliquot B ____

Int ____

Date ____

CONT # ~~5B~~ KMNO4

label ____

Volume ____ ml

Aliquot A ____

Aliquot B ____

Int ____

Date ____

CONT # ~~5C~~ HCl

label ____

Volume ____ ml

Aliquot A ____

Aliquot B ____

Int ____

Date ____

(Duplicate Analysis of Eacl

~~Dessicate to dryness and~~ redissolve in 10ml con HNO3 — Int SRB, Date 10/2/97

Reduce volume to 20 ml on hotplate — Int ____, Date ____

rowave dig
lh conc. HF
conc. HNO3 — Int SRB, Date 10/3/97

Microwave dig with conc. HF and conc. HNO3 — Int SRB, Date 10/3/97

label 184-23-1B

Combine digestates

Front Half Digestate

Add ~~500~~ uL Sc

Dilute to 100 mls — Int SRB, Date 10/3/97

label 184-23-1AB

Volume 100 ML

For Metals

label ____

Volume ____

For Hg

label ____

Volume ____

Reduce Volume to 20 mL on Hotplate — Int. ____, Date ____

Hotplate dig with HNO3 and H202 — Int. ____, Date ____

Add 500 uL Sc — Int. ____, Date ____

Dilute to 100 mls — Int. ____, Date ____

Sample

label ____ Int ____

Volume ____ Date ____

Aliquot A: ____

Aliquot B: ____

Spike
(1 BH Hg Spike required)

label ____ Int ____

Volume ____ Date ____

Aliquot A: ____

Aliquot B: ____

spk ____ ml of ____ ppb — Int ____

final spk conc. added ____ ppb — Date ____

FH & BH Serial dilution performed

____ ml to ____ ml FV + ____ uL Sc

Initials: ____

For Metal

label 184-23-1AB Int SRB

Volume 100 Date 10/3/97

post digest spike on FH for GFAA))

label 184-23-1AB Int ME

Volume 100 ml Date 10/6/97

Aliquot A: 5 mL

(No spike required)

Aliquot B: 5 mL

Spiked 5ppb Final Conc. ME 10/6/97

(One post digestion spk on BH for GFAA)

label ____ Int ____

Volume ____ Date ____

& BH Post dig. spk.

8

1 ppb (Instrument spiked)

Project # 4 223i

Client: PES03

Date/Int.: DSE 9/24/97

Client Run# 2-M-29-2 Run#2

Triangle Laboratories of RTP

(919) 544-5729

ICP	GFAA	FLAA	CVAA

CONT # X

Filter Type: G or Q

label ____

CONT # 2

Acetone Rinse

label ~~183-3-3A~~ EE SPR 9/25/97

Volume ____

CONT # 3

HNO3 Rinse

label 183-3-3B

Volume 110

CONT # 4

Back Half Impinger

label 183-3-3C

Volume 460

Hg Impingers

CONT # 5A — HNO3

label 183-3-3D

Volume 110 ml

Aliquot A 5

Aliquot B 5

Int DSE

Date 9/29/97

CONT # 5B — KMNO4

label 183-3-3E

Volume 360 ml

Aliquot A 5

Aliquot B 5

Int DSE

Date 9/29/97

CONT # 5C — HCl

label 183-3-3F

Volume 23 ml

Aliquot A 5

Aliquot B 5

Int DSE

Date 9/29/97

(Duplicate Analysis of Eac

Dessicate to dryness and redissolve in 10ml con HNO3 — Int ____ Date ____

Reduce volume to 20 ml on hotplate — Int SF — Date 9-25-97

Microwave dig with conc. HF and conc. HNO3 — Int DSE — Date 9/26/97

label 183-3-3B

Microwave dig with conc. HF and conc. HNO3 — Int ____ Date ____

Combine digestates

Front Half Digestate

Add ~~500 uL Sc~~

Dilute to 100 mls — Int DSE — Date 9/26/97

label 183-3-3B

Volume 100 ML

For Metal

label 183-3-3B Int DSE

Volume 100 Date 9/26/97

post digest spike on FH for GFAA))

For Hg

label 183-3-3B Int DSE

Volume 100 ml Date 9/26/97

Aliquot A: 5 ml

(No spike required)

Aliquot B: 5 ml

FH & BH Post dig. spk.

60 ppb (Instrument spiked)

Reduce Volume to 20 mL on Hotplate — Int. SF — Date 9-25-97

Hotplate dig with HNO3 and H202 — Int. DSE — Date 9/26/97

Add 500 uL Sc — Int. ____ Date ____

Dilute to 100 mls — Int. DSE — Date 9/26/97

label 183-3-3C

Volume 100 Date 9/26/97

(One post digestion spk on BH for GFAA)

For Metals

label 183-3-3C

Volume 360

For Hg

label 183-3-3C

Volume 100

Sample

label 183-3-3C Int DSE

Volume 100 Date 9/29/97

Aliquot A: 5

Aliquot B: 5

Spike (1 BH Hg Spike required)

label 183-3-3C Int DSE

Volume 100 Date 9/29/97

Aliquot A: 5

Aliquot B: 5

spk 5 ml of 100 ppb — Int DSE

final spk conc. added 5 ppb — Date 9/29/97

FH & BH Serial dilution performed

____ ml to ____ ml FV + ____ uL Sc

Initials: ____

Date:

Project # 43231

Client:

Date/Int.:

Client Run# I-M29-2

Triangle Laboratories of RTP

(919) 544-5729

Analytes			
ICP	GFAA	FLAA	CVAA

CONT # 1

Filter
Type: G or Q

label 184-23-2A

CONT # 2

Acetone Rinse

label 184-23-2B

Volume DRY

CONT # ~~3~~

HNO3 Rinse

label

Volume

CONT # ~~4~~

Back Half Impinger

label

Volume

Hg Impingers

CONT # ~~5A~~ HNO3

label

Volume ml

Aliquot A

Aliquot B

Int

Date

CONT # ~~5B~~ KMNO4

label

Volume ml

Aliquot A

Aliquot B

Int

Date

CONT # ~~5C~~ HCl

label

Volume ml

Aliquot A

Aliquot B

Int

Date

~~Dessicate to dryness and~~ redissolve in 10ml con HNO3 — Int SRB, Date 10/2/97

Reduce volume to 20 ml on holplate — Int, Date

crowave dig
lh conc. HF
conc. HNO3 — Int SRB, Date 10/3/97

Microwave dig with conc. HF and conc. HNO3 — Int SRB, Date 10/3/97

label 184-23-2B

Combine digestates

Front Half Digestate

Add ~~500~~ uL Sc

Dilute to 100 mls — Int SRB, Date 10/3/97

label 184-23-2AB

Volume 100 ML

For Metal

label 184-23-2AB

Int SRB

Volume 100 Date 10/3/97

post digest spike on FH for GFAA))

For Hg

label 184-23-2AB Int ML

Volume 100 ml Date 10/6/97

& BH Post dig. spk.

___ ppb (Instrument spiked)

Aliquot A: 5 ml

(No spike required)

Aliquot B: 5 ml

For Metals

label

Volume

For Hg

label

Volume

Reduce Volume to 20 mL on Holplate — Int, Date

Holplate dig with HNO3 and H202 — Int, Date

Add 500 uL Sc — Int, Date

Dilute to 100 mls — Int, Date

label Int

Volume Date

(One post digestion spk on BH for GFAA)

(Duplicate Analysis of Eac

Sample

label Int

Volume Date

Aliquot A:

Aliquot B:

Spike
(1 BH Hg Spike required)

label Int

Volume Date

Aliquot A:

Aliquot B:

spk ___ ml of ___ ppb — Int

final spk conc. added ___ ppb — Date

FH & BH Serial dilution performed

___ ml to ___ ml FV + ___ uL Sc

Initials:

Project # 42231
Client: PES03
Date/Int.: DSE 9/24/97
Client Run# 1-M29-3
Run#3

Triangle Laboratories of RTP
(919) 544-5729

ICP	GFAA	FLAA	CVAA

CONT # X
Filter
Type: G or Q
label ____

CONT # 2
Acetone Rinse
label ~~183-3-4A~~ EE SRB 9/25/97
Volume ____

CONT # 3
HNO3 Rinse
label 183-3-4B
Volume 110

CONT # 4
Back Half Impinger
label 183-3-4C
Volume 340

Hg Impingers

CONT # 5A HNO3
label 183-3-4D
Volume 100 ml
Aliquot A 5
Aliquot B 5
Int DSE
Date 9/29/97

CONT # 5B KMNO4
label 183-4-4E
Volume 393 ml
Aliquot A 5
Aliquot B 5
Int DSE
Date 9/24/97

CONT # 5C HCl
label 183-4-4F
Volume 21 ml
Aliquot A 5
Aliquot B 5
Int DSE
Date 9/24/97

(Duplicate Analysis of Eac

Dessicate to dryness and redissolve in 10ml con HNO3 — Int ____ Date ____

Reduce volume to 20 ml on hotplate — Int SF Date 9-25-97

Microwave dig with conc. HF and conc. HNO3 — Int DSE Date 9/26/97
label 183-3-4B

Microwave dig with conc. HF and conc. HNO3 — Int ____ Date ____

Combine digestates

Front Half Digestate

Add 500 uL Sc

Dilute to 100 mls — Int DSE Date 9/26/97
label 183-3-4B
Volume 100 ml

For Metal
label 183-3-4B Int DSE
Volume 100 Date 9/26/97
(post digest spike on FH for GFAA))

For Hg
label 183-3-4B Int DSE
Volume 100 ml Date 9/24/97

FH & BH Post dig. spk.
0 ppb (Instrument spiked)

Aliquot A: 5 mL
(No spike required)
Aliquot B: 5 mL

For Metals
label 183-3-4D

For Hg
label 183-3-4C

Reduce Volume to 20 mL on Hotplate — Int. SF Date 9-25-97

Hotplate dig with HNO3 and H202 — Int. DSE Date 9/26/97

Add 500 uL Sc — Int. ____ Date ____

Dilute to 100 mls — Int. DSE Date 9/26/97

label 183-3-4C Int DSE
Volume 100 Date 9/26/97
(One post digestion spk on BH for GFAA)

Volume 240 Volume 100

Sample
label 183-3-4C Int DSE
Volume 100 Date 9/29/97
Aliquot A: 5
Aliquot B: 5

Spike
(1 BH Hg Spike required)
label 183-3-4C Int DSE
Volume 100 Date 9/24/97
Aliquot A: 5
Aliquot B: ____
spk 5 ml of 100 ppb Int DSE
final spk conc. added 5 ppb Date 9/29/97

FH & BH Serial dilution performed
____ ml to ____ ml FV + ____ uL Sc
Initials: ____
Date: ____

Project # 43231

Client:

Date/Int.:

Client Run# I-M29-3

Triangle Laboratories of RTP

(919) 544-5729

Analytes: ICP | GFAA | FLAA | CVAA

CONT # 1 — Filter (Type: G or Q)
label 184-23-3A

CONT # 2 — Acetone Rinse
label 184-23-3B
Volume DRY

CONT # 3 — HNO3 Rinse
label
Volume

CONT # 4 — Back Half Impinger
label
Volume

Hg Impingers

CONT # 5A — HNO3
label
Volume ml
Aliquot A
Aliquot B
Int
Date

CONT # 5B — KMNO4
label
Volume ml
Aliquot A
Aliquot B
Int
Date

CONT # 5C — HCl
label
Volume ml
Aliquot A
Aliquot B
Int
Date

~~Dessicate to dryness and~~ redissolve in 10ml con HNO3 — Int SRB, Date 10/2/97

Reduce volume to 20 ml on hotplate — Int, Date

Microwave dig with conc. HF and conc. HNO3 — Int SRB, Date 10/3/97
label 184-23-3B

Microwave dig with conc. HF and conc. HNO3 — Int SRB, Date 10/3/97

Combine digestates

Front Half Digestate

Add 500 uL Sc — Int SRB, Date 10/3/97

Dilute to 100 mls
label 184-23-3AB
Volume 100 ML

For Metal
label 184-23-3AB
Int SRB
Volume 100 Date 10/3/97

For Hg
label 184-23-3AB
Int MR
Volume 100 ml
Date 10/6/97

post digest spike on FH for GFAA))

& BH Post dig. spk.
___ 20 ppb (Instrument spiked)

Aliquot A: 5 ml
(No spike required)
Aliquot B: 5 ml

For Metals
label
Volume

For Hg
label
Volume

Reduce Volume to 20 mL on Hotplate — Int., Date

Hotplate dig with HNO3 and H202 — Int., Date

Add 500 uL Sc — Int., Date

Dilute to 100 mls — Int., Date

label Int
Volume Date

(One post digestion spk on BH for GFAA)

(Duplicate Analysis of Eac

Sample
label Int
Volume Date
Aliquot A:
Aliquot B:

Spike
(1 BH Hg Spike required)
label Int
Volume Date
Aliquot A:
Aliquot B:

spk ___ ml of ___ ppb — Int
final spk conc. added ___ ppb — Date

FH & BH Serial dilution performed
___ ml to ___ ml FV + ___ uL Sc
Initials:
Date:

Project # Tri3!

Client: DES03

Date/Int.: DSE 9/24/97

Client Run# O-M29-Blank

Triangle Laboratories of RTP

(919) 544-5729

Analytes	ICP	GFAA	FLAA	CVAA

CONT # 1 — Filter type: G or Q

label ____

CONT # 2 — Acetone Rinse

label ~~183-3-5A~~ EE SDB 9/26/97

Volume ____

CONT # 3 — HNO3 Rinse (use 22)

label 183-3-5B

Volume 72 FV

CONT # 4 — Back Half Impinger (use 5B=50, 5C=100)

label 183-3-5C

Volume 290 FV

Dessicate to dryness and redissolve in 10ml con HNO3 — Int ____ Date ____

Reduce volume to 20 ml on hotplate — Int SF Date 9-25-97

Microwave dig with conc. HF and conc. HNO3 — Int DSE Date 9/26/97

label 183-3-5B

Microwave dig with conc. HF conc. HNO3 — Int ____ Date ____

Combine digestates

Front Half Digestate

Add 500 uL Sc — Int ____ Date ____

Dilute to 100 mls — Int DSE Date 9/26/97

label 183-3-5B

Volume 100 ML

For Metal

label 183-3-5B Int DSE

Volume 100 Date 9/26/97

post digest spike on FH for GFAA))

For Hg

label 183-3-5B Int DSE

Volume 100 ml Date 9/29/97

Allquot A: 5 mL

(No spike required)

Allquot B: 5 mL

& BH Post dig. spk.

9 ppb (Instrument spiked)

For Metals

label 183-3-5B

Volume 150

For Hg

label 183-3-5C

Volume 100 EE 9-30-97

Reduce Volume to 20 mL on Hotplate — Int SF Date 9-25-97

Hotplate dig with HNO3 and H202 — Int DSE Date 9/26/97

Add 500 uL Sc — Int ____ Date ____

Dilute to 100 mls — Int DSE Date 9/26/97

label 183-3-5B, C Int DSE

Volume 100 Date 9/26/97

(One post digestion spk on BH for GFAA)

Hg Impingers

CONT # 5A — HNO3

label 183-3-5D

Volume 50 ml

Allquot A 5

Allquot B 5

Int DSE

Date 9/29/97

CONT # 5B — KMNO4

label 183-3-5E

Volume 255 ml

Allquot A 5

Allquot B 5

Int DSE

Date 9/29/97

CONT # 5C — HCl

label 183-3-5E

Volume 500 ml (5F FV = 110)

Allquot A 5

Allquot B 5

Int DSE

Date 9/30/97

(Duplicate Analysis of Each

Sample

label 183-3-5C Int DSE

Volume 100 Date 9/29/97

Allquot A: 5

Allquot B: 5

~~Spike SAMPLE~~ ~~(1 BH Hg Spike required)~~

label 183-3-5BC Int MR

Volume 100 Date 10/10/97

Allquot A: 5

Allquot B: 5

spk ____ ml of ____ ppb — Int ____

final spk conc. added ____ ppb — Date ____

FH & BH Serial dilution performed

____ ml to ____ ml FV + ____ uL Sc

Initials: ____

Date: ____

Project # 43231

Client:

Date/Int.:

Client Run# D-M29 - FIELD BLANK

Triangle Laboratories of RTP

(919) 544-5729

Analytes			
ICP	GFAA	FLAA	CVAA

CONT # 1

Filter
ype: G or Q

label 184-23-9A

CONT # 2

Acetone Rinse

label 184-23-9B

Volume DRY

CONT # ~~3~~

HNO3 Rinse

label

Volume

CONT # ~~4~~

Back Half Impinger

label

Volume

Hg Impingers

CONT # ~~5A~~ HNO3

label

Volume ml

Aliquot A

Aliquot B

Int

Date

CONT # ~~5B~~ KMNO4

label

Volume ml

Aliquot A

Aliquot B

Int

Date

CONT # ~~5C~~ HCl

label

Volume ml

Aliquot A

Aliquot B

Int

Date

~~Dessicate to dryness and~~ redissolve in 10ml con HNO3 — Int SRB, Date 10/2/97

Reduce volume to 20 ml on holplate — Int, Date

owave dig. conc. HF conc. HNO3 — Int SRB, Date 10/3/97

Microwave dig with conc. HF and conc. HNO3 — Int SRB, Date 10/3/97

label 184-23-9B

Combine digestates

Front Half Digestate

Add ~~500~~ uL Sc

Dilute to 100 mls — Int SRB, Date 10/3/97

label 184-23-9AB

Volume 100 ML

For Metal

label 184-23-9AB Int SRB

olume 100 Date 10/3/97

post digest spike on FH for GFAA))

For Hg

label 184-23-9AB Int MR

Volume 100 ml Date 10/6/97

& BH Post dig. spk.

6 ppb (Instrument spiked)

Aliquot A: 5 mL

(No spike required)

Aliquot B: 5 mL

For Metals

label

Volume

For Hg

label

Volume

Reduce Volume to 20 mL on Holplate — Int., Date

Holplate dig with HNO3 and H202 — Int., Date

Add 500 uL Sc — Int., Date

Dilute to 100 mls — Int., Date

label Int

Volume Date

(One post digestion spk on BH for GFAA)

(Duplicate Analysis of Each

Sample

label Int

Volume Date

Aliquot A:

Aliquot B:

Spike

(1 BH Hg Spike required)

label Int

Volume Date

Aliquot A:

Aliquot B:

spk ml of ppb — Int

final spk conc. added ppb — Date

FH & BH Serial dilution performed

ml to ml FV + uL Sc

Initials:

Project # 43251
Client: PES03
Date/Int.: DSE 9/24/97
Client Run# O-M-29-Run 1

Triangle Laboratories of RTP
(919) 544-5729

ICP	GFAA	FLAA	CVAA

CONT # ~~1~~
Filter
Type: G or Q
label ____

CONT # 2
Acetone Rinse
label ~~183-3-6A~~ EE SRB 9/25/97
Volume ____

CONT # 3
HNO3 Rinse
label 183-3-6B
Volume 90

CONT # 4
Back Half Impinger
label 183-3-6C
Volume 350

Hg Impingers

CONT # 5A
HNO3
label 183-3-6D
Volume 99 ml
Aliquot A 5
Aliquot B 5
Int DSE
Date 9/29/97

CONT # 5B
KMNO4
label 183-3-6E
Volume 375 ml
Aliquot A 5
Aliquot B 5
Int DSE
Date 9/29/97

CONT # 5C
HCl
label 183-3-6F
Volume 24 ml
Aliquot A 5
Aliquot B 5
Int DSE
Date 9/29/97

(Duplicate Analysis of Eac

Dessicate to dryness and redissolve in 10ml con HNO3 — Int ____ Date ____

Reduce volume to 20 ml on hotplate — Int SF Date 9-25-97

Microwave dig with conc. HF and conc. HNO3 — Int DSE Date 9/26/97
label 183-3-6B

Microwave dig with conc. HF conc. HNO3 — Int ____ Date ____

Combine digestates

Front Half Digestate

Add 500 ul Sc

Dilute to 100 mls — Int DSE Date 9/26/97
label 183-3-6B
Volume ____ ML

For Metal
label 183-3-6B Int DSE
Volume 100 Date 9/26/97
(post digest spike on FH for GFAA))

For Hg
label 183-3-6B Int DSE
Volume 100 ml Date 9/29/97

FH & BH Post dig. spk.
6 ppb (Instrument spiked)

Aliquot A: 5 mL
(No spike required)
Aliquot B: 5 mL

For Metals
label 183-3-6C
Volume 250

For Hg
label 183-3-6C
Volume 100

Reduce Volume to 20 mL on Hotplate — Int. SF Date 9-25-97

Hotplate dig with HNO3 and H202 — Int. DSE Date 9/26/97

Add 500 uL Sc — Int. ____ Date ____

Dilute to 100 mls — Int. DSE Date 9/26/97

label 183-3-6C Int DSE
Volume 100 Date 9/26/97
(One post digestion spk on BH for GFAA)

Sample
183-3-6C
label ____ Int DSE
Volume 100 Date 9/29/97
Aliquot A: 5
Aliquot B: 5

Spike
(1 BH Hg Spike required)
183-3-6C
label ____ Int DSE
Volume 100 Date 9/29/97
Aliquot A: 5
Aliquot B: 5
spk 5 ml of 100 ppb — Int DSE
final spk conc. added 5 ppb — Date 9/29/97

FH & BH Serial dilution performed
____ ml to ____ ml FV + ____ uL Sc
Initials: ____
Date:

Project # 43231

Client: _____

Date/Int.: _____

Client Run# D-M29-1

Triangle Laboratories of RTP

(919) 544-5729

Analytes			
ICP	GFAA	FLAA	CVAA

CONT # 1

Filter
Type: G or Q

label 184-23-6A

CONT # 2

Acetone Rinse

label 184-23-6B

Volume DRY

CONT # 3

HNO3 Rinse

label _____

Volume _____

CONT # 4

Back Half Impinger

label _____

Volume _____

Hg Impingers

CONT # 5A — HNO3

label _____

Volume _____ ml

Aliquot A _____

Aliquot B _____

Int _____

Date _____

CONT # 5B — KMNO4

label _____

Volume _____ ml

Aliquot A _____

Aliquot B _____

Int _____

Date _____

CONT # 5C — HCl

label _____

Volume _____ ml

Aliquot A _____

Aliquot B _____

Int _____

Date _____

~~Desiccate to dryness and~~ redissolve in 10ml con HNO3 — Int SRB — Date 10/2/97

Reduce volume to 20 ml on hotplate — Int _____ — Date _____

crowave dig: Int SRB
ith conc. HF
conc. HNO3 — Date 10/3/97

Microwave dig with conc. HF and conc. HNO3 — Int SRB — Date 10/3/97

label 184-23-6B

Combine digestates

Front Half Digestate

Add 500 uL Sc

Dilute to 100 mls — Int SRB — Date 10/3/97

label 184-23-6AB

Volume 100 ML

For Metal

label 184-23-6AB Int SRB

Volume 100 Date 10/3/97

post digest spike on FH for GFAA))

For Hg

label 184-23-6AB Int MC

Volume 100 ml Date 10/6/97

Aliquot A: 5 mL

(No spike required)

Aliquot B: 2

For Metals

label _____

Volume _____

For Hg

label _____

Volume _____

Reduce Volume to 20 mL on Hotplate — Int. _____ — Date _____

Hotplate dig with HNO3 and H202 — Int. _____ — Date _____

Add 500 uL Sc — Int. _____ — Date _____

Dilute to 100 mls — Int. _____ — Date _____

label _____ Int _____

Volume _____ Date _____

(One post digestion spk on BH for GFAA)

(Duplicate Analysis of Each

Sample

label _____ Int _____

Volume _____ Date _____

Aliquot A: _____

Aliquot B: _____

Spike
(1 BH Hg Spike required)

label _____ Int _____

Volume _____ Date _____

Aliquot A: _____

Aliquot B: _____

spk _____ ml of _____ ppb — Int _____

final spk conc. added _____ ppb — Date _____

FH & BH Serial dilution performed

_____ ml to _____ ml FV + _____ uL Sc

Initials: _____

Date:

FH & BH Post dig. spk.

60 ppb (Instrument spiked)

Project # 4523
Client: PES03
Date/Int.: DSE 9/24/97
Client Run# O-M29-Run 2

Triangle Laboratories of RTP
(919) 544-5729

ICP	GFAA	Cyl FLAA	CVAA

CONT # ~~1~~
Filter Type: G or Q
label ____

CONT # 2
Acetone Rinse
label ~~183-3-7A~~ EE SRB 9/25/97
Volume ____

CONT # 3
HNO3 Rinse
label 183-3-7B
Volume 110

CONT # 4
Back Half Impinger
label 183-3-7C
Volume 360

Hg Impingers

CONT # 5A
HNO3
label 183-3-7D
Volume 105 ml
Aliquot A 5
Aliquot B 5
Int DSE
Date 9/24/97

CONT # 5B
KMNO4
label 183-3-7E
Volume 380 ml
Aliquot A 5
Aliquot B 5
Int DSE
Date 9/24/97

CONT # 5C
HCl
label 183-3-7F
Volume 24 ml
Aliquot A 5
Aliquot B 5
Int DSE
Date 9/24/97

(Duplicate Analysis of Each

Dessicate to dryness and redissolve in 10ml con HNO3 — Int ____ Date ____

Reduce volume to 20 ml on hotplate — Int SE Date 9-25-97

Microwave dig with conc. HF and conc. HNO3 — Int DSE Date 9/26/97
label 183-3-7B

Microwave dig with conc. HF conc. HNO3 — Int ____ Date ____

Combine digestates

Front Half Digestate

Add 500 uL Sc — Int ____ Date ____

Dilute to 100 mls — Int DSE Date 9/26/97
label 183-3-7B
Volume 100 ML

For Metal
label 183-3-7B Int DSE
Volume 100 Date 9/26/97
(post digest spike on FH for GFAA))

For Hg
label 183-3-7B Int DSE
Volume 100 ml Date 9/29/97

& BH Post dig. spk.
0 ppb (Instrument spiked)

Aliquot A: 5 mL
(No spike required)
Aliquot B: 5 mL

Reduce Volume to 20 mL on Hotplate — Int. SE Date 9-25-97

Hotplate dig with HNO3 and H202 — Int. DSE Date 9/26/97

Add 500 uL Sc — Int. ____ Date ____

Dilute to 100 mls — Int. DSE Date 9/26/97

For Metals
label 183-3-7C
Volume 260

For Hg
label 183-3-7C
Volume 100

183-3-7C
label ____ Int DSE
Volume 100 Date 9/26/97
(One post digestion spk on BH for GFAA)

Sample
183-3-7C
label ____ Int DSE
Volume 100 Date 9/26/97
Aliquot A: 5
Aliquot B: 5

Spike
(1 BH Hg Spike required)
183-3-7E
label ____ Int DSE
Volume 100 Date 9/24/97
Aliquot A: 5
Aliquot B: 5
spk 5 ml of 100 ppb — Int DSE
final spk conc. added 5 ppb — Date 9/24/97

FH & BH Serial dilution performed
____ ml to ____ ml FV + ____ uL Sc
Initials: ____
Date: ____

Project # 43231

Client:

Date/Int.:

Client Run# O-M29-2

Triangle Laboratories of RTP

(919) 544-5729

Analytes			
ICP	GFAA	FLAA	CVAA

CONT # 1

Filter
ype: G or Q

label 184-23-7A

CONT # 2

Acetone Rinse

label 184-23-7B

Volume DRY

CONT # ~~3~~

HNO3 Rinse

label

Volume

CONT # ~~4~~

Back Half Impinger

label

Volume

Hg Impingers

CONT # ~~5A~~ HNO3

label

Volume ml

Aliquot A

Aliquot B

Int

Date

CONT # ~~5B~~ KMNO4

label

Volume ml

Aliquot A

Aliquot B

Int

Date

CONT # ~~5C~~ HCl

label

Volume ml

Aliquot A

Aliquot B

Int

Date

~~Dessicate to dryness and~~ redissolve in 10ml con HNO3 — Int SRB, Date 10/2/97

Reduce volume to 20 ml on holplate — Int, Date

crowave dig
h conc. HF
conc. HNO3 — Int SRB, Date 10/3/97

Microwave dig with conc. HF and conc. HNO3 — Int SRB, Date 10/3/97

label 184-23-7B

Combine digestates

Front Half Digestate

Add 500 uL Sc

Dilute to 100 mls — Int SRB, Date 10/3/97

label 184-23-7AB

Volume 100 ML

For Metal

label 184-23-7AB

Int SRB

Volume 100

Date 10/3/97

post digest spike on FH for GFAA))

For Hg

label 184-23-7AB

Int MR

Volume 100 ml

Date 10/6/97

& BH Post dig. spk.

ppl strur spl

Aliquot A: 5 mL

(No spike required)

ol B.

For Metals

label

Volume

For Hg

label

Volume

Reduce Volume to 20 ml. on Holplate — Int, Date

Holplate dig with HNO3 and H202 — Int, Date

Add 500 uL Sc — Int, Date

Dilute to 100 mls — Int, Date

label Int

Volume Date

(One post digestion spk on BH for GFAA)

(Duplicate Analysis of Each

Sample

Spike
(1 BH Hg Spike required)

label Int

Volume Date

Aliquot A:

Aliquot B:

label Int

Volume Date

Aliquot A:

Aliquot B:

spk ml
of ppb — Int

final spk conc. added ppb — Date

FH & BH Serial dilution performed

ml to ml FV + uL Sc

Initials:

Date:

Project # 40231

Client: PESD3

Date/Int.: DSE 9/24/97

Client Run # 0-M29-Run 3

Triangle Laboratories of RTP

(919) 544-5729

ICP	GFAA	FLAA	CVAA

CONT # 1 — Filter type: G or Q — label ____

CONT # 2 — Acetone Rinse — label ~~183-3-8A~~ EE SRB 9/25/97 — Volume ____

CONT # 3 — HNO3 Rinse — label 183-3-8B — Volume 110

CONT # 4 — Back Half Impinger — label 183-3-8C — Volume 370

Dessicate to dryness and redissolve in 10ml con HNO3 — Int ____ Date ____

Reduce volume to 20 ml on hotplate — Int SF — Date 9-25-97

Microwave dig with conc. HF and conc. HNO3 — Int DSE — Date 9/26/97 — label 183-3-8B

Microwave dig with conc. HF conc. HNO3 — Int ____ Date ____

Combine digestates

Front Half Digestate

Add 500 uL Sc

Dilute to 100 mls — Int DSE — Date 9/26/97 — label 183-3-3B — Volume 100 ML

For Metal — label 183-3-3B — Int DSE — Volume 100 — Date 9/26/97

post digest spike on FH for GFAA))

For Hg — label 183-3-8B — Int DSE — Volume 100 ml — Date 9/29/97

Allquot A: 5 ml (No spike required)

Allquot B: 5 ml

& BH Post dig. spk. 0 ppb (Instrument spiked)

For Metals — label 183-3-8C — Volume 270

For Hg — label ____ — Volume 100

Reduce Volume to 20 mL on Hotplate — Int. SF — Date 9-25-97

Hotplate dig with HNO3 and H202 — Int. DSE — Date 9/26/97

Add 500 uL Sc — Int. ____ Date ____

Dilute to 100 mls — Int. DSE — Date 9/26/97

183-3-8C — Int DSE — Volume 100 — Date 9/26/97

(One post digestion spk on BH for GFAA)

Hg Impingers

CONT # 5A — HNO3 — label 183-3-8D — Volume 102 ml — Allquot A 5 — Allquot B 5 — Int DSE — Date 9/29/97

CONT # 5B — KMNO4 — label 183-3-8E — Volume 383 ml — Allquot A 5 — Allquot B 5 — Int DSE — Date 9/29/97

CONT # 5C — HCl — label 183-3-8F — Volume 25 ml — Allquot A 5 — Allquot B 5 — Int DSE — Date 9/29/97

(Duplicate Analysis of Each

Sample — 183-3-8D — label ____ — Int DSE — Volume 100 — Date 9/29/97 — Allquot A: 5 — Allquot B: 5

Spike (1 BH Hg Spike required) — Reprep. Run 183-3-8E — label ____ — Int DSE — Volume 100 — Date 9/30/97 — Allquot A: 5 — Allquot B: 5

spk 5 ml of 100 ppb — Int DSE

final spk conc. added 5 ppb — Date 9/30/97

FH & BH Serial dilution performed

____ ml to ____ ml FV + ____ uL Sc

Initials: ____

Date: ____

Project # 43231

Client: _____

Date/Int.: _____

Client Run# D-M29-3

Triangle Laboratories of RTP

(919) 544-5729

Analytes

ICP	GFAA	FLAA	CVAA

CONT # 1

Filter
Type: G or Q

label 184-23-8A

CONT # 2

Acetone Rinse

label 184-23-8B

Volume DRY

CONT # ~~3~~

HNO3 Rinse

label _____

Volume _____

CONT # ~~4~~

Back Half Impinger

label _____

Volume _____

Hg Impingers

CONT # ~~5A~~ HNO3

label _____

Volume _____ ml

Aliquot A _____

Aliquot B _____

Int _____

Date _____

CONT # ~~5B~~ KMNO4

label _____

Volume _____ ml

Aliquot A _____

Aliquot B _____

Int _____

Date _____

CONT # ~~5C~~ HCl

label _____

Volume _____ ml

Aliquot A _____

Aliquot B _____

Int _____

Date _____

~~Dessicate to dryness and~~ redissolve in 10ml con HNO3 — Int SRB, Date 10/2/97

Reduce volume to 20 ml on hotplate — Int _____, Date _____

Microwave dig with conc. HF conc. HNO3 — Int SRB, Date 10/3/97

Microwave dig with conc. HF and conc. HNO3 — Int SRB, Date 10/3/97

label 184-23-8B

Combine digestates

Front Half Digestate

Add 500 uL Sc

Dilute to 100 mls — Int SRB, Date 10/3/97

label 184-23-8AB

Volume 100 ML

For Metal

label 184-23-8AB Int SRB

Volume 100 Date 10/3/97

post digest spike on FH for GFAA))

For Hg

label 184-23-8AB Int MR

Volume 100 ml Date 10/6/97

FH & BH Post dig. spk.

0 ppb (Instrument spiked)

Aliquot A: 5 ml

(No spike required)

Aliquot B: 5 ml

For Metals

label _____

Volume _____

For Hg

label _____

Volume _____

Reduce Volume to 20 ml. on Hotplate — Int. _____, Date _____

Hotplate dig with HNO3 and H202 — Int. _____, Date _____

Add 500 uL Sc — Int. _____, Date _____

Dilute to 100 mls — Int. _____, Date _____

label _____ Int _____

Volume _____ Date _____

(One post digestion spk on BH for GFAA)

(Duplicate Analysis of Each

Sample

label _____ Int _____

Volume _____ Date _____

Aliquot A: _____

Aliquot B: _____

Spike
(1 BH Hg Spike required)

label _____ Int _____

Volume _____ Date _____

Aliquot A: _____

Aliquot B: _____

spk _____ ml of _____ ppb — Int _____

final spk conc. added _____ ppb — Date _____

FH & BH Serial dilution performed

_____ ml to _____ ml FV + _____ uL Sc

Initials: _____

Date: _____

Project # 43231

Client: _____

Date/Int.: _____

Client Run# I/O - M29 - REAGENT BLANK

Triangle Laboratories of RTP

(919) 544-5729

ICP	GFAA	Hyl -- FLAA	CVAA

CONT # 1

Filter
Type: G or Q

label 184-23-5 10A

CONT # 2

Acetone Rinse

label 184-23-10B

Volume DRY

CONT # 3 TV=.165ml

HNO3 Rinse

label 183-15-1B

Volume 35 ml used

CONT # 4

Back Half Impinger

used 1B = 100 mls 1D = 200 MLS

label 183-15-1D

Volume 240 ml = TV

Hg Impingers

CONT # 5A — HNO3

label 183-15-1B

Volume 30 ml

Aliquot A 5

Aliquot B 5

Int DSE

Date 10/7/97

CONT # ~~5B~~ — KMNO4

label N/A

Volume ___ ml

Aliquot A ___

Aliquot B ___

Int ___

Date ___

CONT # 5C — HCl

label 183-15-1E

Volume 100 ml

Aliquot A 5

Aliquot B 5

Int DSE

Date 10/7/97

~~Dessicate to dryness and redissolve in 10ml con HNO3~~ Int DSE Date 10/6/97

Reduce volume to 20 ml on holplate Int SRB Date 10/2/97

Microwave dig with conc. HF and conc. HNO3 Int DSE Date 10/6/97

label 184-23-5, 10A, 10B, 1B

Microwave dig with conc. HF and conc. HNO3 Int DSE Date 10/6/97

Combine digestates

Front Half Digestate

Add ~~500 uL Sc~~

Dilute to 100 mls Int DSE Date 10/6/97

label 184-23-5, 10A, 10B, 1B

Volume 100 ML

For Metal

label 184-23-5, 10A, 10B, 1B Int DSE

Volume 100 Date 10/6/97

post digest spike on FH for GFAA))

For Hg

label 183-15-1B Int DSE

Volume 100 ml Date 10/7/97

Aliquot A: 5 ml

(No spike required)

Aliquot B: 5 ml

For Metals

label 183-15-1B, 1D

Volume 300

~~For Hg~~

label ___

Volume ___

Reduce Volume to 20 ml. on Holplate Int. SRB Date 10/2/97

Holplate dig with HNO3 and H2O2 Int. DSE Date 10/6/97

Add 500 uL Sc Int. ___ Date ___

Dilute to 100 mls Int. DSE Date 10/6/97

DSE 10/7/97

label 183-15-1B, 1D Int DSE

Volume 100 Date 10/6/97

(One post digestion spk on BH for GFAA)

Sample

label 183-15-1B Int DSE

Volume 100 Date 10/7/97

Aliquot A: 5

Aliquot B: 5

Spike (1 BH Hg Spike required)

label 183-15-1BD Int DSE

Volume 100 Date 10/7/97

Aliquot A: 5

Aliquot B: 5

spk 5 ml of 100 ppb Int DSE

final spk conc. added 5 ppb Date 10/7/97

(Duplicate Analysis of Each

FH & BH Post dig. spk.

___ ppb (Instrument spiked)

FH & BH Serial dilution performed

___ ml to ___ ml FV + ___ uL Sc

Initials: _____

Date: _____

Project #_____

Client:_____

Date/Int.:_____

Client Run# I/O - M29 - REAGENT BLANK

Triangle Laboratories of RTP

(919) 544-5729

Analytes			
ICP	GFAA	FLAA	CVAA

CONT # 1

Filter
Type: G or Q

label_____

CONT # 2

Acetone Rinse

label_____

Volume____

CONT # 3

~~HNO3~~ DI H2O Rinse

label 183-15-IC

Volume 345 ml

CONT # 4

Back Half Impinger

label_____

Volume____

Hg Impingers

CONT # 5A — HNO3

label_____

Volume____ml

Aliquot A____

Aliquot B____

Int _____

Date _____

CONT # 5B — KMNO4

label_____

Volume____ml

Aliquot A____

Aliquot B____

Int _____

Date _____

CONT # 5C — HCl

label_____

Volume____ml

Aliquot A____

Aliquot B____

Int _____

Date _____

Dessicate to dryness and redissolve in 10ml con HNO3 — Int _____ Date _____

Reduce volume to 20 ml on hotplate — Int SPB Date 10/2/97

Microwave dig with conc. HF and conc. HNO3 — Int _____ Date _____

Microwave dig with conc. HF and conc. HNO3 — Int DSE Date 10/6/97

label 183-15-IC

Combine digestates

Front Half Digestate

Add 500 uL Sc

Dilute to 100 mls — Int DSE Date 10/6/97

label 183-15-IC

Volume 100 ML

For Metals

label 183-15-IC Int DSE

Volume 100 Date 10/6/97

post digest spike on FH for GFAA))

For Hg

label 183-15-IC Int DSE

Volume 100 ml Date 10/7/97

Aliquot A: 5 ml

(No spike required)

Aliquot 5

FH & BH Post dig. spk.

_____ (ppb instrument spiked)

For Metals

label_____

Volume____

For Hg

label_____

Volume____

Reduce Volume to 20 ml. on Hotplate — Int._____ Date_____

Hotplate dig with HNO3 and H202 — Int._____ Date_____

Add 500 uL Sc — Int._____ Date_____

Dilute to 100 mls — Int._____ Date_____

label_____ Int _____

Volume____ Date _____

(One post digestion spk on BH for GFAA)

(Duplicate Analysis of Eac

Sample

Spike
(1 BH Hg Spike required)

label_____ Int _____

Volume____ Date _____

Aliquot A:_____

Aliquot B:_____

label_____ Int _____

Volume____ Date _____

Aliquot A: _____

Aliquot B: _____

spk____ml of____ppb — Int _____

final spk conc. added____ppb — Date _____

FH & BH Serial dilution performed

____ ml to ____ml FV + ____uL Sc

Initials: _____

Date

INORGANICS SPIKE LOG

DATE	PROJECT # SAMPLE IDs	ANALYTE	ORIGINAL STANDARD #	ORIGINAL STANDARD CONC. (PPM)	SPIKE SAMPLE (µL) / FINAL VOLUME (mL)	SPIKE SAMPLE (PPB)	INITIALS	WITNESS
9/25/97	43307-LCS	*	3-013-3	*	1000/100	*	DSE	ME
9/25/97	43287A-LCS	*	3-013-3	*	1000/100	*	DSE	JLE
	183-59-3 MS						↓	↓
	183-59-3 MSD						↓	↓
9/25/97	43287E-LCS	*	3-013-3	*	1000/100	*	DSE	JLE
	183-59-4A MS						↓	↓
	183-59-4A MSD						↓	↓
9/26/97	43331-LCS	*	3-013-3	*	1000/100	*	DSE	SRB
		P	2-60-2	1000	100/100	1000	↓	↓

INORGANICS SPIKE LOG

DATE	PROJECT # SAMPLE IDs	ANALYTE	ORIGINAL STANDARD #	ORIGINAL STANDARD CONC. (PPM)	SPIKE SAMPLE (µL) / FINAL VOLUME (mL)	SPIKE SAMPLE (PPB)	INITIALS	WITNESS
9/25/97	43307-LCS	*	3-013-3	*	1000/100	*	DSE	MR
9/25/97	43287A-LCS	*	3-013-3	*	1000/100	*	DSE	JLE
	183-59-3MS						↓	↓
	183-59-3MSD						↓	↓
9/25/97	43287E-LCS	*	3-013-3	*	1000/100	*	DSE	JLE
	183-59-4A MS						↓	↓
	183-59-4A MSD						↓	↓
9/26/97	43231-LCS	*	3-013-3	*	1000/100	*	DSE	SRB
		P	2-120-2	1000	100/100	1000	↓	↓
9/26/97	43233-B-LCS	*	3-013-3	*	1000/100	*	DSE	SRB
	183-5-1MS						↓	↓
	183-5-1MSD						↓	↓
9/29/97	43395-LCS	*	3-013-3	*	1000/100	*	SRB	DSE
	184-68-1A MS						↓	↓
	184-68-1A MSD						↓	↓
10/3/97	43231-LCS	*	3-013-3	*	1000/100	*	SRB	SF
		P	2-120-2	1000	100/100	1000	↓	↓

TLI # 43231

* SEE SPIKE LOG

EXP date	Element	Spiking Standard Preparation: Standard ID	Orig. Std. (ppm)	Spike(uL) / Fvol(100mL)	conc (ppm)	SPIKING from Spiking Standard: Spike(uL) / FVol(100ml)	conc (ppb)	combined total
2/1/98	Ag	2-115-4	100	5000	5	1000	50	
9/1/98	As	3-010-10	100	5000	5	1000	50	
2/1/98	Al	2-115-4	100	5000	5	1000	50	
9/1/98	Al	3-010-7	10000	950	95	1000	950	1000
2/1/98	B	2-115-4	100	5000	5	1000	50	
2/1/98	Ba	2-115-4	100	5000	5	1000	50	
9/1/98	Be	3-010-10	100	5000	5	1000	50	
9/1/98	Ca	3-010-10	100	5000	5	1000	50	
9/1/98	Ca	3-012-7	10000	950	95	1000	950	1000
9/1/98	Cd	3-010-10	100	5000	5	1000	50	
9/1/98	Co	3-010-10	100	5000	5	1000	50	
9/1/98	Cr	3-010-10	100	5000	5	1000	50	
9/1/98	Cu	3-010-10	100	5000	5	1000	50	
9/1/98	Fe	3-010-10	100	5000	5	1000	50	
9/1/98	Fe	3-012-6	10000	950	95	1000	950	1000
2/1/98	K	2-115-4	1000	5000	50	1000	500	
9/1/98	K	3-012-5	10000	1500	150	1000	1500	2000
9/1/98	Mg	3-010-10	100	5000	5	1000	50	
8/1/98	Mg	3-010-8	10000	950	95	1000	950	1000
9/1/98	Mn	3-010-10	100	5000	5	1000	50	
9/1/98	Mo	3-010-10	100	5000	5	1000	50	
2/1/98	Na	2-115-4	100	5000	5	1000	50	
8/1/98	Na	3-010-9	10000	1950	195	1000	1950	2000
9/1/98	Ni	3-010-10	100	5000	5	1000	50	
9/1/98	Pb	3-010-10	100	5000	5	1000	50	
9/1/98	Sb	3-010-10	100	5000	5	1000	50	
9/1/98	Se	3-010-10	100	5000	5	1000	50	
9/1/98	Tl	3-010-10	100	5000	5	1000	50	
9/1/98	Tl	3-010-10	100	5000	5	1000	50	
9/1/98	V	3-010-10	100	5000	5	1000	50	
9/1/98	Zn	3-010-10	100	5000	5	1000	50	
8/1/98	Zn	3-010-6	1000	1500	15	1000	150	200

1000uL of the Spiking Standard gives the listed conc. of the above elements.

**Spike seperately

Element	Orig Std (ppm)	Spike(uL) Fvol(100m	conc (ppb)
Au	1000	140	1400
Ce	1000	30	300
Li	1000	70	700
P	1000	100	1000
Pd	1000	160	1600
Pt	1000	300	3000
S	1000	350	3500
Si	10000	350	35000
Sn	1000	20	200
Sr	1000	5	50

Spiking Standard 3-013-3
EXP: 11/26/97

Spiked by:
Predigestion- D. Stretter-Edwards 9/26/97
Postdigestion-

TLI # 43231 additional Samples

*** SEE SPIKE LOG**

EXP date	Element	Spiking Standard Preparation: Standard ID	Orig. Std. (ppm)	Spike(uL) Fvol(100mL)	conc (ppm)	SPIKING from Spiking Standard: Spike(uL) FVol(100ml)	conc (ppb)	combined total
2/1/98	Ag	2-115-4	100	5000	5	1000	50	
9/1/98	As	3-010-10	100	5000	5	1000	50	
2/1/98	Al	2-115-4	100	5000	5	1000	50	
9/1/98	Al	3-010-7	10000	950	95	1000	950	1000
2/1/98	B	2-115-4	100	5000	5	1000	50	
2/1/98	Ba	2-115-4	100	5000	5	1000	50	
9/1/98	Be	3-010-10	100	5000	5	1000	50	
9/1/98	Ca	3-010-10	100	5000	5	1000	50	
9/1/98	Ca	3-012-7	10000	950	95	1000	950	1000
9/1/98	Cd	3-010-10	100	5000	5	1000	50	
9/1/98	Co	3-010-10	100	5000	5	1000	50	
9/1/98	Cr	3-010-10	100	5000	5	1000	50	
9/1/98	Cu	3-010-10	100	5000	5	1000	50	
9/1/98	Fe	3-010-10	100	5000	5	1000	50	
9/1/98	Fe	3-012-6	10000	950	95	1000	950	1000
2/1/98	K	2-115-4	1000	5000	50	1000	500	
9/1/98	K	3-012-5	10000	1500	150	1000	1500	2000
9/1/98	Mg	3-010-10	100	5000	5	1000	50	
8/1/98	Mg	3-010-8	10000	950	95	1000	950	1000
9/1/98	Mn	3-010-10	100	5000	5	1000	50	
9/1/98	Mo	3-010-10	100	5000	5	1000	50	
2/1/98	Na	2-115-4	100	5000	5	1000	50	
8/1/98	Na	3-010-9	10000	1950	195	1000	1950	2000
9/1/98	Ni	3-010-10	100	5000	5	1000	50	
9/1/98	Pb	3-010-10	100	5000	5	1000	50	
9/1/98	Sb	3-010-10	100	5000	5	1000	50	
9/1/98	Se	3-010-10	100	5000	5	1000	50	
9/1/98	Ti	3-010-10	100	5000	5	1000	50	
9/1/98	Tl	3-010-10	100	5000	5	1000	50	
9/1/98	V	3-010-10	100	5000	5	1000	50	
9/1/98	Zn	3-010-10	100	5000	5	1000	50	
8/1/98	Zn	3-010-6	1000	1500	15	1000	150	200

1000uL of the Spiking Standard gives the listed conc. of the above elements.

****Spike seperately**

Element	Orig Std (ppm)	Spike(uL) Fvol(100m	conc (ppb)
Au	1000	140	1400
Ce	1000	30	300
Li	1000	70	700
P	1000	100	1000
Pd	1000	160	1600
Pt	1000	300	3000
S	1000	350	3500
Si	10000	350	35000
Sn	1000	20	200
Sr	1000	5	50

Spiking Standard 3-013-3
EXP: 11/26/97

Spiked by: SRB 10/3/97
Predigestion-

Postdigestion-

TRIANGLE LABORATORIES, INC.
Transfer Chain-of-Custody Form
Project 43231

Transfer From: IWLM To: IA I

	Initials..	Date.....	Time...
Released by:	RJC	9/26/97	17 25
Accepted by:	MKA	9/26/97	23 45

MILES.ID.....		TLI_No.....	Cust.Id.....
43231-	-000	TLI Blank	TLI Method Blank
43231-	-001	183-3-2B	I-M29-1-FHAR
43231-	-002	183-3-2C	I-M29-1-5% 10%
43231-	-003	183-3-2D	I-M29-1-BHAR
43231-	-004	183-3-2E	I-M29-1-KMNO4
43231-	-005	183-3-2F	I-M29-1-HCL
43231-	-006	184-23-1A	I-M29-1
43231-	-007	184-23-1B	I-M29-1
43231-	-008	183-3-3B	I-M29-2-FHAR
43231-	-009	183-3-3C	I-M29-2-5% 10%
43231-	-010	183-3-3D	I-M29-2-BHAR
43231-	-011	183-3-3E	I-M29-2-KMNO4
43231-	-012	183-3-3F	I-M29-2-HCL
43231-	-013	184-23-2A	I-M29-2
43231-	-014	184-23-2B	I-M29-2
43231-	-015	183-3-4B	I-M29-3-FHAR
43231-	-016	183-3-4C	I-M29-3-5% 10%
43231-	-017	183-3-4D	I-M29-3-BHAR
43231-	-018	183-3-4E	I-M29-3-KMNO4
43231-	-019	183-3-4F	I-M29-3-HCL
43231-	-020	184-23-3A	I-M29-3
43231-	-021	184-23-3B	I-M29-3
43231-	-022	183-3-1B	I-M29-FHAR
43231-	-023	183-3-1C	I-M29-BLK-5% 10%
43231-	-024	183-3-1D	I-M29-BLK-BHAR
43231-	-025	183-3-1E	I-M29-BLK-KMNO4
43231-	-026	183-3-1F	I-M29-BLK-HCL
43231-	-027	184-23-4A	I-M29-FIELD BLANK
43231-	-028	184-23-4B	I-M29-FIELD BLANK
43231-	-029	183-3-6B	O-M29-1-FHAR

XfrCOC (Rev 11/01/94)

Additional comments or instructions:

TRIANGLE LABORATORIES, INC.
Transfer Chain-of-Custody Form
Project 43231

Transfer From: IWLM To: IA I

	Initials..	Date.....	Time...
Released by:	CSE	9/26/97	17 25
Accepted by:	MLH	9/28/97	23:45

MILES.ID.....		TLI_No.....	Cust.Id.....
43231-	-030	183-3-6C	O-M29-1-5% 10%
43231-	-031	183-3-6D	O-M29-1-BHAR
43231-	-032	183-3-6E	O-M29-1-KMNO4
43231-	-033	183-3-6F	O-M29-1-HCL
43231-	-034	184-23-6A	O-M29-1
43231-	-035	184-23-6B	O-M29-1
43231-	-037	183-3-7B	O-M29-2-FHAR
43231-	-038	183-3-7C	O-M29-2-5% 10%
43231-	-039	183-3-7D	O-M29-2-BHAR
43231-	-040	183-3-7E	O-M29-2-KMNO4
43231-	-041	183-3-7F	O-M29-2-HCL
43231-	-042	184-23-7A	O-M29-2
43231-	-043	184-23-7B	O-M29-2
43231-	-044	183-3-8B	O-M29-3-FHAR
43231-	-045	183-3-8C	O-M29-3-5% 10%
43231-	-046	183-3-8D	O-M29-3-BHAR
43231-	-047	183-3-8E	O-M29-3-KMNO4
43231-	-048	183-3-8F	O-M29-3-HCL
43231-	-049	184-23-8A	O-M29-3
43231-	-050	184-23-8B	O-M29-3
43231-	-051	183-3-5B	O-M29-FHAR
43231-	-052	183-3-5C	O-M29-BLK-5% 10%
43231-	-053	183-3-5D	O-M29-BLK-BHAR
43231-	-054	183-3-5E	O-M29-BLK-KMNO4
43231-	-055	183-3-5F	O-M29-BLK-HCL
43231-	-056	184-23-9A	O-M29-FIELD BLANK
43231-	-057	184-23-9B	O-M29-FIELD BLANK
43231-	-058	183-15-1B	Reagent Blank
43231-	-059	183-15-1C	Reagent Blank
43231-	-060	183-15-1D	Reagent Blank

XfrCOC (Rev 11/01/94)

Additional comments or instructions:

TRIANGLE LABORATORIES, INC.
Transfer Chain-of-Custody Form
Project 43231

Transfer From: IWLM To: IA I

	Initials..	Date.....	Time...
Released by:	DSE	9/26/97	17:25
Accepted by:	MLA	9/28/97	23:45

MILES.ID.....		TLI_No.....	Cust.Id.....
43231-	-061	183-15-1E	Reagent Blank
43231-	-062	184-23-5	I-M29-REAGENT BLANK
43231-	-063	184-23-10A	O-M29-REAGENT BLANK
43231-	-064	184-23-10B	O-M29-REAGENT BLANK
43231-	-065	LCS	Lab Control Spike

XfrCOC (Rev 11/01/94)

Additional comments or instructions:

TRIANGLE LABORATORIES, INC.
Transfer Chain-of-Custody Form
Project 43231

Transfer From: IWL To: IA I

	Initials..	Date.....	Time...
Released by:	SRB	10/3/97	15:00
Accepted by:	SRB	10/6/97	8:00

MILES.ID.....		TLI_No.....	Cust.Id.....
43231-	-000	TLI Blank	TLI Method Blank
43231-	-001	183-3-2B	I-M29-1-FHAR
43231-	-002	183-3-2C	I-M29-1-5% 10%
43231-	-003	183-3-2D	I-M29-1-BHAR
43231-	-004	183-3-2E	I-M29-1-KMNO4
43231-	-005	183-3-2F	I-M29-1-HCL
43231-	-006	184-23-1A	I-M29-1
43231-	-007	184-23-1B	I-M29-1
43231-	-008	183-3-3B	I-M29-2-FHAR
43231-	-009	183-3-3C	I-M29-2-5% 10%
43231-	-010	183-3-3D	I-M29-2-BHAR
43231-	-011	183-3-3E	I-M29-2-KMNO4
43231-	-012	183-3-3F	I-M29-2-HCL
43231-	-013	184-23-2A	I-M29-2
43231-	-014	184-23-2B	I-M29-2
43231-	-015	183-3-4B	I-M29-3-FHAR
43231-	-016	183-3-4C	I-M29-3-5% 10%
43231-	-017	183-3-4D	I-M29-3-BHAR
43231-	-018	183-3-4E	I-M29-3-KMNO4
43231-	-019	183-3-4F	I-M29-3-HCL
43231-	-020	184-23-3A	I-M29-3
43231-	-021	184-23-3B	I-M29-3
43231-	-022	183-3-1B	I-M29-FHAR
43231-	-023	183-3-1C	I-M29-BLK-5% 10%
43231-	-024	183-3-1D	I-M29-BLK-BHAR
43231-	-025	183-3-1E	I-M29-BLK-KMNO4
43231-	-026	183-3-1F	I-M29-BLK-HCL
43231-	-027	184-23-4A	I-M29-FIELD BLANK
43231-	-028	184-23-4B	I-M29-FIELD BLANK
43231-	-029	183-3-6B	O-M29-1-FHAR

XfrCOC (Rev 11/01/94)

Additional comments or instructions.:

TRIANGLE LABORATORIES, INC.
Transfer Chain-of-Custody Form
Project 43231

Transfer From: IWL To: IA I

	Initials..	Date.....	Time...
Released by:	SRB	10/3/97	15:00
Accepted by:	SRB	10/6/97	8:00

MILES.ID.....		TLI_No.....	Cust.Id.....
43231-	-030	183-3-6C	O-M29-1-5% 10%
43231-	-031	183-3-6D	O-M29-1-BHAR
43231-	-032	183-3-6E	O-M29-1-KMNO4
43231-	-033	183-3-6F	O-M29-1-HCL
43231-	-034	184-23-6A	O-M29-1
43231-	-035	184-23-6B	O-M29-1
43231-	-037	183-3-7B	O-M29-2-FHAR
43231-	-038	183-3-7C	O-M29-2-5% 10%
43231-	-039	183-3-7D	O-M29-2-BHAR
43231-	-040	183-3-7E	O-M29-2-KMNO4
43231-	-041	183-3-7F	O-M29-2-HCL
43231-	-042	184-23-7A	O-M29-2
43231-	-043	184-23-7B	O-M29-2
43231-	-044	183-3-8B	O-M29-3-FHAR
43231-	-045	183-3-8C	O-M29-3-5% 10%
43231-	-046	183-3-8D	O-M29-3-BHAR
43231-	-047	183-3-8E	O-M29-3-KMNO4
43231-	-048	183-3-8F	O-M29-3-HCL
43231-	-049	184-23-8A	O-M29-3
43231-	-050	184-23-8B	O-M29-3
43231-	-051	183-3-5B	O-M29-FHAR
43231-	-052	183-3-5C	O-M29-BLK-5% 10%
43231-	-053	183-3-5D	O-M29-BLK-BHAR
43231-	-054	183-3-5E	O-M29-BLK-KMNO4
43231-	-055	183-3-5F	O-M29-BLK-HCL
43231-	-056	184-23-9A	O-M29-FIELD BLANK
43231-	-057	184-23-9B	O-M29-FIELD BLANK
43231-	-058	183-15-1B	Reagent Blank
43231-	-059	183-15-1C	Reagent Blank
43231-	-060	183-15-1D	Reagent Blank

XfrCOC (Rev 11/01/94)

Additional comments or instructions:

TRIANGLE LABORATORIES, INC.
Transfer Chain-of-Custody Form
Project 43231

Transfer From: IWL To: IA I

	Initials..	Date.....	Time...
Released by:	SRB	10/3/97	15:00
Accepted by:	SRB	10/6/97	8:00

MILES.ID.....		TLI_No.....	Cust.Id.....
43231-	-061	183-15-1E	Reagent Blank
43231-	-062	184-23-5	I-M29-REAGENT BLANK
43231-	-063	184-23-10A	O-M29-REAGENT BLANK
43231-	-064	184-23-10B	O-M29-REAGENT BLANK
43231-	-065	LCS	Lab Control Spike

XfrCOC (Rev 11/01/94)

Additional comments or instructions:

Date	Project # Sample IDs	Analyte	Std ID	Std conc ppm	spike vol / sample vol uL/ml	Spike conc (ppm)	Initials	Witness
10/7/97	43231	↓	3-013-4	↓	100/10	↓	MKW	MKW
SS MKW 10/7/97	183-3-2AB PDS							
	183-3-2C PDS							
	184-23-2A PDS							

#43231

* SEE SPIKE LOG

EXP date	Element	Standard ID	Orig. Std. (ppm)	Spike(uL) / Fvol(100mL)	conc (ppm)	SPIKING from Spiking Standard Spike(uL) / FVol(100ml)	conc (ppb)	combined total
2/1/98	Ag	2-115-4	100	5000	5	1000	50	
9/1/98	As	3-010-10	100	5000	5	1000	50	
2/1/98	Al	2-115-4	100	5000	5	1000	50	
9/1/98	Al	3-010-7	10000	950	95	1000	950	1000
2/1/98	B	2-115-4	100	5000	5	1000	50	
2/1/98	Ba	2-115-4	100	5000	5	1000	50	
9/1/98	Be	3-010-10	100	5000	5	1000	50	
9/1/98	Ca	3-010-10	100	5000	5	1000	50	
9/1/98	Ca	3-012-7	10000	950	95	1000	950	1000
9/1/98	Cd	3-010-10	100	5000	5	1000	50	
9/1/98	Co	3-010-10	100	5000	5	1000	50	
9/1/98	Cr	3-010-10	100	5000	5	1000	50	
9/1/98	Cu	3-010-10	100	5000	5	1000	50	
9/1/98	Fe	3-010-10	100	5000	5	1000	50	
9/1/98	Fe	3-012-6	10000	950	95	1000	950	1000
2/1/98	K	2-115-4	1000	5000	50	1000	500	
9/1/98	K	3-012-5	10000	1500	150	1000	1500	2000
9/1/98	Mg	3-010-10	100	5000	5	1000	50	
8/1/98	Mg	3-010-8	10000	950	95	1000	950	1000
9/1/98	Mn	3-010-10	100	5000	5	1000	50	
9/1/98	Mo	3-010-10	100	5000	5	1000	50	
2/1/98	Na	2-115-4	100	5000	5	1000	50	
8/1/98	Na	3-010-9	10000	1950	195	1000	1950	2000
9/1/98	Ni	3-010-10	100	5000	5	1000	50	
9/1/98	Pb	3-010-10	100	5000	5	1000	50	
9/1/98	Sb	3-010-10	100	5000	5	1000	50	
9/1/98	Se	3-010-10	100	5000	5	1000	50	
9/1/98	Ti	3-010-10	100	5000	5	1000	50	
9/1/98	Tl	3-010-10	100	5000	5	1000	50	
9/1/98	V	3-010-10	100	5000	5	1000	50	
9/1/98	Zn	3-010-10	100	5000	5	1000	50	
8/1/98	Zn	3-010-6	1000	1500	15	1000	150	200

1000uL of the Spiking Standard gives the listed conc. of the above elements.

**Spike seperately

Element	Orig Std (ppm)	Spike(uL) Fvol(100m	conc (ppb)
Au	1000	140	1400
Ce	1000	30	300
Li	1000	70	700
P	1000	100	1000
Pd	1000	160	1600
Pt	1000	300	3000
S	1000	350	3500
Si	10000	350	35000
Sn	1000	20	200
Sr	1000	5	50

Spiking Standard 3-013-4
EXP: 11/26/97

Spiked by:
Predigestion-

Postdigestion- 10/7/97 [illegible]

Date	Project # Sample #	Analyte	Std ID	Std. conc ppm	Spike vol / sample vol mL/mL	Spike conc ppb	Initials	Witness	Date
10/16/97	43377	↓	3-013-3	↓	100/10	↓	MCH	MCH	
	184-50-1BBC PDS	P	2-112-4	100	100/10	↓	MCH	DK	
	184-50-1C PDS	↓	↓	↓	↓	↓	↓	↓	
11/19/97	43239	↓	3-013-3	↓	100/10	↓	MCH	MCH	
	183-11-5 PDS	↓	↓	↓	↓	↓	↓	↓	
11/19/97	42011 Cal	↓	3-013-3	↓	100/10	↓	MCH	MCH	
	170-70-3 PDS	↓	↓	↓	↓	↓	↓	↓	
11/19/97	43438	↓	3-013-3	↓	100/10	↓	MCH	MCH	
	185-12-1PDS	↓	↓	↓	↓	↓	↓	↓	
12/20/97	43411	↓	3-013-3	↓	100/10	↓	MCH	MCH	
	184-84-1BBC PDS	P	2-112-4	100	100/10	(1000) ↓	↓	↓	
	184-84-1C PDS	↓	↓	↓	↓	↓	↓	↓	
01/21/97	43666B	↓	3-013-3	↓	100/10	↓	MCH	MCH	
	187-42-1B PDS	↓	↓	↓	↓	↓	↓	↓	
12/22/97	43482C	↓	3-013-3	↓	100/10	↓	MCH	MCH	
	185-562-4-PDS	↓	↓	↓	↓	↓	↓	↓	
12/22/97	43482B	↓	3-013-3	↓	100/10	↓	MCH	MCH	
	185-56-1C PDS	↓	↓	↓	↓	↓	↓	↓	
12/22/97	43571	↓	3-013-3	↓	100/10	↓	MCH	MCH	
	185-85-1 PDS	↓	↓	↓	↓	↓	↓	↓	
12/22/97	43553	↑	3-013-3	↓	100/10	↓	SCB	SCB	
	186-28-1 PDS	↓	↓	↓	↓	↓	↓	↓	
12/23/97	43478	↓	3-013-3	↓	100/10	↓	MCH	MCH	
	185-52-2 PDS	↓	↓	↓	↓	↓	↓	↓	
	43536	↓	↓	↓	↓	↓	↓	↓	
	186-11-2 PDS	↓	↓	↓	↓	↓	↓	↓	
12/23/97	43231	↓	3-013-3	↓	100/10	↓	SCB	SCB	
	184-23-2BB XD PDS	↓	↓	↓	↓	↓	↓	↓	

78.

* SEE SPIKE LOG

TLI #42321

EXP date	Element	Spiking Standard Preparation: Standard ID	Orig. Std. (ppm)	Spike(uL) FVol(100mL)	conc (ppm)	SPIKING from Spiking Standard: Spike(uL) FVol(100ml)	conc (ppb)	combined total
2/1/98	Ag	2-115-4	100	5000	5	1000	50	
9/1/98	As	3-010-10	100	5000	5	1000	50	
2/1/98	Al	2-115-4	100	5000	5	1000	50	
9/1/98	Al	3-010-7	10000	950	95	1000	950	1000
2/1/98	B	2-115-4	100	5000	5	1000	50	
2/1/98	Ba	2-115-4	100	5000	5	1000	50	
9/1/98	Be	3-010-10	100	5000	5	1000	50	
9/1/98	Ca	3-010-10	100	5000	5	1000	50	
9/1/98	Ca	3-012-7	10000	950	95	1000	950	1000
9/1/98	Cd	3-010-10	100	5000	5	1000	50	
9/1/98	Co	3-010-10	100	5000	5	1000	50	
9/1/98	Cr	3-010-10	100	5000	5	1000	50	
9/1/98	Cu	3-010-10	100	5000	5	1000	50	
9/1/98	Fe	3-010-10	100	5000	5	1000	50	
9/1/98	Fe	3-012-6	10000	950	95	1000	950	1000
2/1/98	K	2-115-4	1000	5000	50	1000	500	
9/1/98	K	3-012-5	10000	1500	150	1000	1500	2000
9/1/98	Mg	3-010-10	100	5000	5	1000	50	
8/1/98	Mg	3-010-8	10000	950	95	1000	950	1000
9/1/98	Mn	3-010-10	100	5000	5	1000	50	
9/1/98	Mo	3-010-10	100	5000	5	1000	50	
2/1/98	Na	2-115-4	100	5000	5	1000	50	
8/1/98	Na	3-010-9	10000	1950	195	1000	1950	2000
9/1/98	Ni	3-010-10	100	5000	5	1000	50	
9/1/98	Pb	3-010-10	100	5000	5	1000	50	
9/1/98	Sb	3-010-10	100	5000	5	1000	50	
9/1/98	Se	3-010-10	100	5000	5	1000	50	
9/1/98	Tl	3-010-10	100	5000	5	1000	50	
9/1/98	Tl	3-010-10	100	5000	5	1000	50	
9/1/98	V	3-010-10	100	5000	5	1000	50	
9/1/98	Zn	3-010-10	100	5000	5	1000	50	
8/1/98	Zn	3-010-8	1000	1500	15	1000	150	200

1000uL of the Spiking Standard gives the listed conc. of the above elements.

**Spike seperately

Element	Orig Std (ppm)	Spike(uL) FVol(100m	conc (ppb)
Au	1000	140	1400
Ce	1000	30	300
Li	1000	70	700
P	1000	100	1000
Pd	1000	160	1600
Pt	1000	300	3000
S	1000	350	3500
Si	10000	350	35000
Sn	1000	20	200
Sr	1000	5	50

Spiking Standard 3-013-3
EXP: 11/26/97

Spiked by:
Predigestion-

Postdigestion- SRB 10/23/97

t	Project # + Sample IDs	Analyte	Std ID	Std Conc (ppm)	Spike Vol. / Sample Vol ul/ml	Spike Conc. (ppb)	INITIALS	WITNESS
4/97	43482E	+	3-013-3	+	100/10	+	SRB	SRB
	185-56-2-4 PDS	↓	↓	↓	↓	↓	↓	↓
28/97	43482E	+	3-013-3	+	100/10	+	MKH	MKH
	185-56-2-4 PDS	↓	↓	↓	↓	↓	↓	↓
8/97	43603	+	3-013-3	+	100/10	+	MKH	MKH
	187-32-1 PDS	P.	2-112-4	100	100/10	1000		
		Sn	2-112-5	100	50/10	500		
		Si	3-010-5	1000	100/10	10,000		
29/97	43482E	+	3-013-3	+	100/10	+	SRB	SRB
	185-56-2-4 PDS	↓	↓	↓	↓	↓	↓	↓
29/97	43619	+	3-013-3	+	100/10	+	SRB	SRB
	186-94-2A,BC PDS	↓	↓	↓	↓	↓	↓	↓
	186-94-2D PDS	↓	↓	↓	↓	↓	↓	↓
0/97	43603	Si	3-010-5	1000	100/10	10,000	MKH	MKH
	187-32-1 PDS x100	↓	↓	↓	↓	↓	↓	↓
0/97	43231	+	3-013-3	+	100/10	+	MKH	MKH
	184-27-2 AB x200 PDS	P	2-112-4	100	100/10	1000	↓	↓
0/97	43630	+	3-013-3	+	100/10	+	MKH	MKH
	187-6-2 PDS	↓	↓	↓	↓	↓	↓	↓
30/97	43615B	+	3-013-3	+	100/10	+	MKH	MKH
	186-90-2 PDS	↓	↓	↓	↓	↓	↓	↓
30/97	43641	+	3-013-3	+	100/10	+	MKH	MKH
	187-17-1 PDS	↓	↓	↓	↓	↓	↓	↓

* SEE SPIKE LOG

EXP date	Spiking Standard Preparation: Element	Standard ID	Orig. Std. (ppm)	Spike(uL) / Fvol(100mL)	conc (ppm)	SPIKING from Spiking Standard: Spike(uL) / FVol(100ml)	conc (ppb)	combined total
2/1/98	Ag	2-115-4	100	5000	5	1000	50	
9/1/98	As	3-010-10	100	5000	5	1000	50	
2/1/98	Al	2-115-4	100	5000	5	1000	50	
9/1/98	Al	3-010-7	10000	950	95	1000	950	1000
2/1/98	B	2-115-4	100	5000	5	1000	50	
2/1/98	Ba	2-115-4	100	5000	5	1000	50	
9/1/98	Be	3-010-10	100	5000	5	1000	50	
9/1/98	Ca	3-010-10	100	5000	5	1000	50	
9/1/98	Ca	3-012-7	10000	950	95	1000	950	1000
9/1/98	Cd	3-010-10	100	5000	5	1000	50	
9/1/98	Co	3-010-10	100	5000	5	1000	50	
9/1/98	Cr	3-010-10	100	5000	5	1000	50	
9/1/98	Cu	3-010-10	100	5000	5	1000	50	
9/1/98	Fe	3-010-10	100	5000	5	1000	50	
9/1/98	Fe	3-012-6	10000	950	95	1000	950	1000
2/1/98	K	2-115-4	1000	5000	50	1000	500	
9/1/98	K	3-012-5	10000	1500	150	1000	1500	2000
9/1/98	Mg	3-010-10	100	5000	5	1000	50	
8/1/98	Mg	3-010-8	10000	950	95	1000	950	1000
9/1/98	Mn	3-010-10	100	5000	5	1000	50	
9/1/98	Mo	3-010-10	100	5000	5	1000	50	
2/1/98	Na	2-115-4	100	5000	5	1000	50	
8/1/98	Na	3-010-9	10000	1950	195	1000	1950	2000
9/1/98	Ni	3-010-10	100	5000	5	1000	50	
9/1/98	Pb	3-010-10	100	5000	5	1000	50	
9/1/98	Sb	3-010-10	100	5000	5	1000	50	
9/1/98	Se	3-010-10	100	5000	5	1000	50	
9/1/98	Tl	3-010-10	100	5000	5	1000	50	
9/1/98	Ti	3-010-10	100	5000	5	1000	50	
9/1/98	V	3-010-10	100	5000	5	1000	50	
9/1/98	Zn	3-010-10	100	5000	5	1000	50	
8/1/98	Zn	3-010-6	1000	1500	15	1000	150	200

1000uL of the Spiking Standard gives the listed conc. of the above elements.

**Spike seperately

Element	Orig Std (ppm)	Spike(uL) Fvol(100cm	conc (ppb)
Au	1000	140	1400
Ce	1000	30	300
Li	1000	70	700
P	1000	100	1000
Pd	1000	160	1600
Pt	1000	300	3000
S	1000	350	3500
Si	10000	350	35000
Sn	1000	20	200
Sr	1000	5	50

Spiking Standard 3-013-3
EXP: 11/26/97

Spiked by:
Predigestion-
Postdigestion- MKH 10/30/97

Analysis Report Summary Wed 10-08-97 00:52:56 AM page 1

#	Sample Name	File	Method	Date	Time	OpID	Type	Mode
1	STD1-BLANK	100797	TRIANGL2	10/07/97	02:08		X	IR
2	STD3	100797	TRIANGL2	10/07/97	02:13		X	IR
3	STD3	100797	TRIANGL2	10/07/97	02:17	DKH	Q	CONC
4	CHECK LO	100797	TRIANGL2	10/07/97	02:22	DKH	Q	CONC
~~5~~	~~ICV/CCV~~	~~100797~~	~~TRIANGL2~~	~~10/07/97~~	~~02:27~~	~~DKH~~	~~Q~~	~~CONC~~
6	ICV/CCV	100797	TRIANGL2	10/07/97	02:34	DKH	Q	CONC
7	ICB/CCB	100797	TRIANGL2	10/07/97	02:44	DKH	Q	CONC
8	ICSAB	100797	TRIANGL2	10/07/97	02:49	DKH	Q	CONC
9	CHECK LO	100797	TRIANGL2	10/07/97	02:55	DKH	Q	CONC
10	CHECK 9972	100797	TRIANGL2	10/07/97	03:33		S	CONC
11	185-4-1	100797	TRIANGL2	10/07/97	03:43	DKH	S	CONC
12	185-4-1 D	100797	TRIANGL2	10/07/97	03:48	DKH	S	CONC
13	ICV/CCV	100797	TRIANGL2	10/07/97	03:54	DKH	Q	CONC
~~14~~	~~ICB/CCB~~	~~100797~~	~~TRIANGL2~~	~~10/07/97~~	~~04:13~~	~~DKH~~	~~Q~~	~~CONC~~
~~15~~	~~ICB/CCB~~	~~100797~~	~~TRIANGL2~~	~~10/07/97~~	~~04:19~~	~~DKH~~	~~Q~~	~~CONC~~
16	ICB/CCB	100797	TRIANGL2	10/07/97	04:31	DKH	Q	CONC
17	ICSAB	100797	TRIANGL2	10/07/97	04:37	DKH	Q	CONC
18	43231 MB	100797	TRIANGL2	10/07/97	05:09	DKH	S	CONC
19	43231 LCS	100797	TRIANGL2	10/07/97	05:14	DKH	S	CONC
20	183-3-1B	100797	TRIANGL2	10/07/97	05:19	DKH	S	CONC
21	183-3-2B	100797	TRIANGL2	10/07/97	05:23	DKH	S	CONC
22	183-3-2B PDS	100797	TRIANGL2	10/07/97	05:28	DKH	S	CONC
23	183-3-2B L	100797	TRIANGL2	10/07/97	05:33	DKH	S	CONC
24	183-3-3B	100797	TRIANGL2	10/07/97	05:37	DKH	S	CONC
25	183-3-3B DA	100797	TRIANGL2	10/07/97	05:42	DKH	S	CONC
26	183-3-4B	100797	TRIANGL2	10/07/97	05:47	DKH	S	CONC
27	183-3-5B	100797	TRIANGL2	10/07/97	05:51	DKH	S	CONC
28	ICV/CCV	100797	TRIANGL2	10/07/97	05:57	DKH	Q	CONC
~~29~~	~~ICB/CCB~~	~~100797~~	~~TRIANGL2~~	~~10/07/97~~	~~06:04~~	~~DKH~~	~~Q~~	~~CONC~~
30	ICB/CCB	100797	TRIANGL2	10/07/97	06:19	DKH	Q	CONC
31	183-3-6B	100797	TRIANGL2	10/07/97	06:24	DKH	S	CONC
32	183-3-7B	100797	TRIANGL2	10/07/97	06:29	DKH	S	CONC
33	183-3-8B	100797	TRIANGL2	10/07/97	06:34	DKH	S	CONC
34	183-3-1B D	100797	TRIANGL2	10/07/97	06:38	DKH	S	CONC
35	183-3-2C	100797	TRIANGL2	10/07/97	06:43	DKH	S	CONC
36	183-3-2C PDS	100797	TRIANGL2	10/07/97	06:48	DKH	S	CONC
37	183-3-2C L	100797	TRIANGL2	10/07/97	06:52	DKH	S	CONC
38	183-3-3C	100797	TRIANGL2	10/07/97	06:57	DKH	S	CONC
39	183-3-3C DA	100797	TRIANGL2	10/07/97	07:02	DKH	S	CONC
40	183-3-4C	100797	TRIANGL2	10/07/97	07:06	DKH	S	CONC
41	ICV/CCV	100797	TRIANGL2	10/07/97	07:12	DKH	Q	CONC
42	ICB/CCB	100797	TRIANGL2	10/07/97	07:17	DKH	Q	CONC
~~43~~	~~183-3-5BC~~	~~100797~~	~~TRIANGL2~~	~~10/07/97~~	~~07:23~~	~~DKH~~	~~S~~	~~CONC~~
44	183-3-6C	100797	TRIANGL2	10/07/97	07:27	DKH	S	CONC
45	183-3-7C	100797	TRIANGL2	10/07/97	07:32	DKH	S	CONC
46	183-3-8C	100797	TRIANGL2	10/07/97	07:38	DKH	S	CONC
47	43231 MB	100797	TRIANGL2	10/07/97	07:42	DKH	S	CONC
48	43231 LCS	100797	TRIANGL2	10/07/97	07:47	DKH	S	CONC
~~49~~	~~184-23-1AB~~	~~100797~~	~~TRIANGL2~~	~~10/07/97~~	~~07:52~~	~~DKH~~	~~S~~	~~CONC~~
50	ICB/CCB	100797	TRIANGL2	10/07/97	10:36	DKH	Q	CONC
51	ICV/CCV	100797	TRIANGL2	10/08/97	00:37	DKH	Q	CONC
52	ICB/CCB	100797	TRIANGL2	10/08/97	00:42	DKH	Q	CONC
53	ICSAB	100797	TRIANGL2	10/08/97	00:47	DKH	Q	CONC

Zn needs dilution. MCH 10/7/97

Will all be reanalyzed on a seperate cone.

** Analysis halted due to high level contamination from sample. Passing QC was never obtained after this sample. DKH 10/7/97

N/N. Reanalyzed DKH 10/7/97

122

SOP # E010303 MCH 10/7/97

#	Sample Name	File	Method	Date	Time	OpID	Type	Mode
1	ICV/CCV	100797	TRIANGL2	10/08/97	00:37	DKH	Q	CONC
2	ICB/CCB	100797	TRIANGL2	10/08/97	00:42	DKH	Q	CONC
3	ICSAB	100797	TRIANGL2	10/08/97	00:47	DKH	Q	CONC
4	STD1-BLANK	100797	TRIANGL2	10/08/97	02:11		X	IR
5	STD3	100797	TRIANGL2	10/08/97	02:16		X	IR
6	STD3	100797	TRIANGL2	10/08/97	02:21	DKH	Q	CONC
7	CHECK LO	100797	TRIANGL2	10/08/97	02:26	DKH	Q	CONC
8	ICV/CCV	100797	TRIANGL2	10/08/97	02:30	DKH	Q	CONC
9	ICB/CCB	100797	TRIANGL2	10/08/97	02:36	DKH	Q	CONC
10	ICSAB	100797	TRIANGL2	10/08/97	02:41	DKH	Q	CONC
11	183-3-3B X50	100797	TRIANGL2	10/08/97	03:13	DKH	S	CONC
12	183-3-3B X50 DA	100797	TRIANGL2	10/08/97	03:17	DKH	S	CONC
13	183-3-5BC	100797	TRIANGL2	10/08/97	03:22	DKH	S	CONC
14	183-3-6C	100797	TRIANGL2	10/08/97	03:27	DKH	S	CONC
15	183-3-7C	100797	TRIANGL2	10/08/97	03:31	DKH	S	CONC
16	183-3-8C	100797	TRIANGL2	10/08/97	03:36	DKH	S	CONC
17	43231 MB	100797	TRIANGL2	10/08/97	03:41	DKH	S	CONC
18	43231 LCS	100797	TRIANGL2	10/08/97	03:45	DKH	S	CONC
~~19~~	~~184-23-1AB X50~~	~~100797~~	~~TRIANGL2~~	~~10/08/97~~	~~03:50~~	~~DKH~~	~~S~~	~~CONC~~
~~20~~	~~184-23-2AB X50~~	~~100797~~	~~TRIANGL2~~	~~10/08/97~~	~~03:55~~	~~DKH~~	~~S~~	~~CONC~~
~~21~~	~~ICV/CCV~~	~~100797~~	~~TRIANGL2~~	~~10/08/97~~	~~03:59~~	~~DKH~~	~~Q~~	~~CONC~~
~~22~~	~~ICV/CCV~~	~~100797~~	~~TRIANGL2~~	~~10/08/97~~	~~04:04~~	~~DKH~~	~~Q~~	~~CONC~~
23	ICV/CCV	100797	TRIANGL2	10/08/97	04:14	DKH	Q	CONC
24	ICB/CCB	100797	TRIANGL2	10/08/97	04:21	DKH	Q	CONC
25	184-23-1AB X200	100797	TRIANGL2	10/08/97	04:26	DKH	S	CONC
26	184-23-2AB X200	100797	TRIANGL2	10/08/97	04:31	DKH	S	CONC
27	184-23-2AB X200 L	100797	TRIANGL2	10/08/97	04:36	DKH	S	CONC
28	184-23-3AB X200	100797	TRIANGL2	10/08/97	04:40	DKH	S	CONC
29	184-23-3AB X200 DA	100797	TRIANGL2	10/08/97	04:47	DKH	S	CONC
30	184-23-4AB	100797	TRIANGL2	10/08/97	05:01	DKH	S	CONC
31	184-23-6AB	100797	TRIANGL2	10/08/97	05:14	DKH	S	CONC
32	184-23-7AB	100797	TRIANGL2	10/08/97	05:22	DKH	S	CONC
33	184-23-8AB	100797	TRIANGL2	10/08/97	05:32	DKH	S	CONC
34	ICV/CCV	100797	TRIANGL2	10/08/97	05:40	DKH	Q	CONC
~~35~~	~~ICB/CCB~~	~~100797~~	~~TRIANGL2~~	~~10/08/97~~	~~05:45~~	~~DKH~~	~~Q~~	~~CONC~~
~~36~~	~~ICB/CCB~~	~~100797~~	~~TRIANGL2~~	~~10/08/97~~	~~05:50~~	~~DKH~~	~~Q~~	~~CONC~~
37	ICB/CCB	100797	TRIANGL2	10/08/97	06:06	DKH	Q	CONC
38	184-23-9AB	100797	TRIANGL2	10/08/97	06:11	DKH	S	CONC
39	184-23-10AB,5	100797	TRIANGL2	10/08/97	06:20	DKH	S	CONC
40	183-15-1C	100797	TRIANGL2	10/08/97	06:25	DKH	S	CONC
41	ICV/CCV	100797	TRIANGL2	10/08/97	06:29	DKH	Q	CONC
42	183-15-1BC	100797	TRIANGL2	10/08/97	06:34	DKH	S	CONC
43	ICV/CCV	100797	TRIANGL2	10/08/97	06:39	DKH	Q	CONC
~~44~~	~~ICB/CCB~~	~~100797~~	~~TRIANGL2~~	~~10/08/97~~	~~06:45~~	~~DKH~~	~~Q~~	~~CONC~~
45	ICB/CCB	100797	TRIANGL2	10/08/97	06:50	DKH	Q	CONC
46	ICSAB	100797	TRIANGL2	10/08/97	06:56	DKH	Q	CONC

Reanalyzed w/ larger dilutions.

→ Failed slightly low for Be. This will ha. to be accepted, since the failure was due to sample matrix effects on introduction system of ICP DKH 10/8/97.

* N/V. Reanalyzed DKH 10/8/97

SOP# E010303
DKH 10/8/97

SRB 10/23/97

#	Sample Name	File	Method	Date	Time	OpID	Type	Mode
1	STD1-BLANK	102397	TRIANGL2	10/23/97	05:07		X	IP
2	STD3	102397	TRIANGL2	10/23/97	05:12		X	IR
3	STD3	102397	TRIANGL2	10/23/97	05:17	SRB	Q	CONC
4	CHECK LO	102397	TRIANGL2	10/23/97	05:21	SRB	Q	CONC
5	ICV/CCV	102397	TRIANGL2	10/23/97	05:26	SRB	Q	CONC
~~6~~	~~ICB/CCB~~	~~102397~~	~~TRIANGL2~~	~~10/23/97~~	~~05:31~~	~~SRB~~	~~Q~~	~~CONC~~ Rerun SRB 10/23/97
7	ICB/CCB	102397	TRIANGL2	10/23/97	05:37	SRB	Q	CONC
8	ICSAB	102397	TRIANGL2	10/23/97	05:42	SRB	Q	CONC
9	CHECK 9972	102397	TRIANGL2	10/23/97	05:57	DKH	S	CONC
10	187-68-1	102397	TRIANGL2	10/23/97	06:01	DKH	S	CONC
11	187-68-1 D	102397	TRIANGL2	10/23/97	06:06	DKH	S	CONC
12	ICV/CCV	102397	TRIANGL2	10/23/97	06:11	DKH	Q	CONC
~~13~~	~~ICB/CCB~~	~~102397~~	~~TRIANGL2~~	~~10/23/97~~	~~06:15~~	~~DKH~~	~~Q~~	~~CONC~~ Rerun SRB 10/23/97
14	ICB/CCB	102397	TRIANGL2	10/23/97	06:21	DKH	Q	CONC
15	43478 MB	102397	TRIANGL2	10/23/97	06:27	DKH	S	CONC
16	43478 LCS	102397	TRIANGL2	10/23/97	06:32	DKH	S	CONC
17	185-52-1	102397	TRIANGL2	10/23/97	06:37	DKH	S	CONC
18	185-52-1 D	102397	TRIANGL2	10/23/97	06:41	DKH	S	CONC
19	185-52-2	102397	TRIANGL2	10/23/97	06:46	DKH	S	CONC
20	185-52-2 MS	102397	TRIANGL2	10/23/97	06:51	DKH	S	CONC
21	185-52-2 MSD	102397	TRIANGL2	10/23/97	06:55	DKH	S	CONC
22	185-52-2 PDS	102397	TRIANGL2	10/23/97	07:00	DKH	S	CONC
23	185-52-2 L	102397	TRIANGL2	10/23/97	07:11	DKH	S	CONC
24	185-52-3	102397	TRIANGL2	10/23/97	07:16	DKH	S	CONC
25	185-52-4	102397	TRIANGL2	10/23/97	07:20	DKH	S	CONC
26	ICV/CCV	102397	TRIANGL2	10/23/97	07:25	DKH	Q	CONC
27	ICB/CCB	102397	TRIANGL2	10/23/97	07:38	DKH	Q	CONC
28	185-52-4	102397	TRIANGL2	10/23/97	07:49	DKH	S	CONC
29	43536 MB	102397	TRIANGL2	10/23/97	07:58	DKH	S	CONC
30	43536 LCS	102397	TRIANGL2	10/23/97	08:03	DKH	S	CONC
31	186-11-1	102397	TRIANGL2	10/23/97	08:08	DKH	S	CONC
32	186-11-1 D	102397	TRIANGL2	10/23/97	08:13	DKH	S	CONC
33	186-11-2	102397	TRIANGL2	10/23/97	08:17	DKH	S	CONC
34	186-11-2 MS	102397	TRIANGL2	10/23/97	08:22	DKH	S	CONC
35	186-11-2 MSD	102397	TRIANGL2	10/23/97	08:27	DKH	S	CONC
36	186-11-2 PDS	102397	TRIANGL2	10/23/97	08:31	DKH	S	CONC
37	186-11-2 L	102397	TRIANGL2	10/23/97	08:36	DKH	S	CONC
38	186-11-3	102397	TRIANGL2	10/23/97	08:41	DKH	S	CONC
39	ICV/CCV	102397	TRIANGL2	10/23/97	08:45	DKH	Q	CONC
40	ICB/CCB	102397	TRIANGL2	10/23/97	09:05	DKH	Q	CONC
41	186-11-4	102397	TRIANGL2	10/23/97	09:10	DKH	S	CONC
42	ICV/CCV	102397	TRIANGL2	10/23/97	09:15	DKH	Q	CONC
43	ICB/CCB	102397	TRIANGL2	10/23/97	09:20	DKH	Q	CONC
44	ICSAB	102397	TRIANGL2	10/23/97	09:27	DKH	Q	CONC
45	184-23-1A8 X10	102397	TRIANGL2	10/23/97	13:47	SRB	S	CONC
46	184-23-2A8 X10	102397	TRIANGL2	10/23/97	13:52	SRB	S	CONC
47	184-23-2A8 X10 PDS	102397	TRIANGL2	10/23/97	13:57	SRB	S	CONC
48	184-23-2A8 X10 L	102397	TRIANGL2	10/23/97	14:02	SRB	S	CONC
49	184-23-3A8 X10	102397	TRIANGL2	10/23/97	14:08	SRB	S	CONC
50	184-23-3A8 X10 DA	102397	TRIANGL2	10/23/97	14:13	SRB	S	CONC
51	ICV/CCV	102397	TRIANGL2	10/23/97	14:18	SRB	Q	CONC
~~52~~	~~ICB/CCB~~	~~102397~~	~~TRIANGL2~~	~~10/23/97~~	~~14:24~~	~~SRB~~	~~Q~~	~~CONC~~ Rerun SRB 10/23/97
53	ICB/CCB	102397	TRIANGL2	10/23/97	14:37	SRB	Q	CONC

#	Sample Name	File	Method	Date	Time	OpID	Type	Mode
54	ICSAB	102397	TRIANGL2	10/23/97	14:42	SRB	Q	CONC

#	Sample Name	File	Method	Date	Time	DnID	Type	Mode
1	STD1-BLANK	103097	TRIANGL2	10/30/97	00:49		X	IR
2	STD1-BLANK	103097	TRIANGL2	10/30/97	00:53		X	IR
3	STD1	103097	TRIANGL2	10/30/97	00:58		X	IR
4	STD	103097	TRIANGL2	10/30/97	01:04		X	IP
5	STD1	103097	TRIANGL2	10/30/97	01:08	DKH	Q	CONC
6	CHECK 10	103097	TRIANGL2	10/30/97	01:14	DKH	Q	CONC
7	ICV/CCV	103097	TRIANGL2	10/30/97	01:20	DKH	Q	CONC
8	~~ICB/CCB~~	~~103097~~	~~TRIANGL2~~	~~10/30/97~~	~~01:24~~	~~DKH~~	~~Q~~	~~CONC~~
9	ICB/CCB	103097	TRIANGL2	10/30/97	01:30	DKH	Q	CONC
10	ICSAB	103097	TRIANGL2	10/30/97	01:35	DKH	Q	CONC
11	43603 MB	103097	TRIANGL2	10/30/97	01:43	DKH	S	CONC
12	43603 LCS	103097	TRIANGL2	10/30/97	01:48	DKH	S	CONC
13	~~187-32-1 x100~~	103097	TRIANGL2	10/30/97	01:53	DKH	S	CONC
14	~~187-32-1 x100 POS~~	103097	TRIANGL2	10/30/97	01:57	DKH	S	CONC
15	~~184-23-2AB x200~~	103097	TRIANGL2	10/30/97	02:02	DKH	S	CONC
16	~~187-32-2AB x200 POS~~	103097	TRIANGL2	10/30/97	02:08	DKH	S	CONC
17	ICV/CCV	103097	TRIANGL2	10/30/97	02:15	DKH	Q	CONC
18	~~ICB/CCB~~	~~103097~~	~~TRIANGL2~~	~~10/30/97~~	~~02:19~~	~~DKH~~	~~Q~~	~~CONC~~
19	~~ICB/CCB~~	~~103097~~	~~TRIANGL2~~	~~10/30/97~~	~~02:25~~	~~DKH~~	~~Q~~	~~CONC~~
20	ICB/CCB	103097	TRIANGL2	10/30/97	02:46	DKH	Q	CONC
21	ICSAB	103097	TRIANGL2	10/30/97	02:51	DKH	Q	CONC
22	43630 MB	103097	TRIANGL2	10/30/97	03:07	DKH	S	CONC
23	43630 LCS	103097	TRIANGL2	10/30/97	03:11	DKH	S	CONC
24	187-6-1	103097	TRIANGL2	10/30/97	03:16	DKH	S	CONC
25	187-6-1 D	103097	TRIANGL2	10/30/97	03:21	DKH	S	CONC
26	187-6-2	103097	TRIANGL2	10/30/97	03:25	DKH	S	CONC
27	187-6-2 MS	103097	TRIANGL2	10/30/97	03:30	DKH	S	CONC
28	187-6-2 MSD	103097	TRIANGL2	10/30/97	03:35	DKH	S	CONC
29	187-6-2 POS	103097	TRIANGL2	10/30/97	03:40	DKH	S	CONC
30	187-6-3	103097	TRIANGL2	10/30/97	03:45	DKH	S	CONC
31	187-6-4	103097	TRIANGL2	10/30/97	03:50	DKH	S	CONC
32	ICV/CCV	103097	TRIANGL2	10/30/97	03:54	DKH	Q	CONC
33	ICB/CCB	103097	TRIANGL2	10/30/97	04:01	DKH	Q	CONC
34	187-6-4	103097	TRIANGL2	10/30/97	04:06	DKH	S	CONC
35	ICV/CCV	103097	TRIANGL2	10/30/97	04:13	DKH	Q	CONC
36	ICB/CCB	103097	TRIANGL2	10/30/97	04:18	DKH	Q	CONC
37	ICSAB	103097	TRIANGL2	10/30/97	04:24	DKH	Q	CONC
38	43615R MB	103097	TRIANGL2	10/30/97	04:37	DKH	S	CONC
39	43615R LCS	103097	TRIANGL2	10/30/97	04:42	DKH	S	CONC
40	186-90-1	103097	TRIANGL2	10/30/97	04:46	DKH	S	CONC
41	186-90-1 D	103097	TRIANGL2	10/30/97	04:51	DKH	S	CONC
42	186-90-2	103097	TRIANGL2	10/30/97	04:56	DKH	S	CONC
43	186-90-2 MS	103097	TRIANGL2	10/30/97	05:00	DKH	S	CONC
44	186-90-2 MSD	103097	TRIANGL2	10/30/97	05:05	DKH	S	CONC
45	186-90-2 POS	103097	TRIANGL2	10/30/97	05:10	DKH	S	CONC
46	186-90-2 1	103097	TRIANGL2	10/30/97	05:14	DKH	S	CONC
47	186-90-3	103097	TRIANGL2	10/30/97	05:19	DKH	S	CONC
48	ICV/CCV	103097	TRIANGL2	10/30/97	05:24	DKH	Q	CONC
49	ICB/CCB	103097	TRIANGL2	10/30/97	05:30	DKH	Q	CONC
50	186-90-4	103097	TRIANGL2	10/30/97	06:12	DKH	S	CONC
51	ICV/CCV	103097	TRIANGL2	10/30/97	06:16	DKH	Q	CONC
52	ICB/CCB	103097	TRIANGL2	10/30/97	06:21	DKH	Q	CONC
53	ICSAB	103097	TRIANGL2	10/30/97	06:27	DKH	Q	CONC

13- 8x200
14 POS
15 184-23-2AB x200
16 187-32-2AB x200 POS

184-23-2AB x200
184-23-2AB x200 POS
187-32-1 x100
187-32-1 x100 POS

DKH 10/30/97

Failing QC. Reanalyzed DKH 10/30/97

Pb shows some matrix interferences MS/MSD/POS are all failing low. Also, samples show negative values.

DKH 10/30/97

* EE. Samples reversed. DKH 10/30/97

TRIANGLE LABORATORIES, INC.

Sample Preparation Tracking & Management Form

Project: 43231 Client: Pacific Environmental Services (PES03)

Sample Information

Method: 7470 Extraction Date: 9/30/97

Solvent/Acids(): HNO_3/H_2SO_4 Lot: 117040 / 317020

Hg

Sample # crd	TLI SAMPLE ID / CLIENT SAMPLE ID		Sample Wgt g / Vol ml (DSE 9/29/97)	Final Volume ml (DSE 9/29/97)	Extraction Date				
000	TLI Blank MB'D	TLI Method Blank	N/A	100	DSE 9/29/97				
001	183-3-2B / 183-3-2B Dup	I-M29-1-FHAR	5/5	100	DSE 9/29/97				
002	183-3-2C / 183-3-2C Dup	I-M29-1-5% 10%	5/5	100	DSE 9/29/97				
003	183-3-2D / 183-3-2D Dup	I-M29-1-BHAR	5/5	100	DSE 9/29/97				
004	183-3-2E / 183-3-2E Dup	I-M29-1-KMNO4	5/5	100	DSE 9/29/97				
005	183-3-2F / 183-3-2F	I-M29-1-HCL	5/5	100	DSE 9/29/97				
006	184-23-1A B / 184-23-1A B D	I-M29-1	5/5	100	MR 10/6/97				
007	184-23-1B	I-M29-1							
008	183-3-3B / 183-3-3B Dup	I-M29-2-FHAR	5/5	100	DSE 9/29/97				
009	183-3-3C / 183-3-3C Dup	I-M29-2-5% 10%	5/5	100	DSE 9/29/97				
010	183-3-3D / 183-3-3D Dup	I-M29-2-BHAR	5/5	100	DSE 9/29/97				
011	183-3-3E / 183-3-3E Dup	I-M29-2-KMNO4	5/5	100	DSE 9/29/97				
012	183-3-3F / 183-3-3F Dup	I-M29-2-HCL	5/5	100	DSE 9/29/97				

Comments: See HGSL-1, Spike Log page(s) 64 & 65 & 66

REV 07/26/93 (PSTMF 7)

TRIANGLE LABORATORIES, INC.

Sample Preparation Tracking & Management Form

Project: 43231 Client: Pacific Environmental Services (PES03)

Sample Information

Method: 7470 Extraction Date: 9/30/97

Solvent/Acids(): HNO_3/H_2SO_4 Lot: 117040/37020

Hg.

Sample #	crd	TLI SAMPLE ID / CLIENT SAMPLE ID	Sample Wgt g / Vol ml	Final Volume ml	Extraction Date
0		184-23-2A B / 184-23-2AB D / I-M29-2	5/5	100	me 10/6/97
0		184-23-2B / I-M29-2			
015		183-3-4B / 183-3-4B Dup / I-M29-3-FHAR	5/5	100	DSE 9/24/97
016		183-3-4C / 183-3-4C Dup / I-M29-3-5% 10%	5/5	100	DSE 9/30/97
017		183-3-4D / 183-3-4D Dup / I-M29-3-BHAR	5/5	100	DSE 9/30/97
018		183-3-4E / 183-3-4E Dup / I-M29-3-KMNO4	5/5	100	DSE 9/30/97
0[illegible]		183-3-4F / 183-3-4F Dup / I-M29-3-HCL	5/5	100	DSE 9/30/97
0[illegible]		184-23-3A B / 184-23-3AB D / I-M29-3	5/5	100	me 10/6/97
0		184-23-3B / 183-23- / I-M29-3			
0		183-3-1B / 183-3-1B D / I-M29-FHAR	5/5	100	DSE 10/7/97
0		183-3-1C / 183-3-1C Dup / I-M29-BLK-5% 10%	5/5	100	DSE 9/24/97
0[illegible]		183-3-1D / 183-3-1D Dup / I-M29-BLK-BHAR	5/5	100	DSE 9/29/97
025		183-3-1E / 183-3-1E Dup / I-M29-BLK-KMNO4	5/5	100	DSE 9/29/97

Comments: See page 1 of 5

TRIANGLE LABORATORIES, INC.

Sample Preparation Tracking & Management Form

Project: 43231 Client: Pacific Environmental Services (PES03)

Sample Information

Method: 7470 Extraction Date: 9/30/97

Solvent/Acids() HNO3/H2SO4 Lot: 117040/317020

Hg.

Sample #	crd	TLI SAMPLE ID / CLIENT SAMPLE ID	Sample Wgt g / Vol ml (DSE 9/29/97)	Final Volume ml (DSE 9/29/97)	Extraction Date
026		183-3-1F / 183-3-1F Dup / I-M29-BLK-HCL	5 / 5	100	mr for DSE 9/30/97
027		184-23-4A B / 184-23-4AB / I-M29-FIELD BLANK	5 / 5	100	mr 10/6/97
028		184-23-4B / I-M29-FIELD BLANK			
029		183-3-6B / 183-3-6B Dup / O-M29-1-FHAR	5 / 5	100	DSE 9/30/97
030		183-3-6C / 183-3-6C Dup / O-M29-1-5% 10%	5 / 5	100	DSE 9/30/97
031		183-3-6D / 183-3-6D Dup / O-M29-1-BHAR	5 / 5	100	DSE 9/30/97
032		183-3-6E / 183-3-6E Dup / O-M29-1-KMNO4	5 / 5	100	DSE 9/30/97
033		183-3-6F / 183-3-6F Dup / O-M29-1-HCL	5 / 5	100	DSE 9/30/97
034		184-23-6A B / 184-23-6AB D / O-M29-1	5 / 5	100	mr 10/6/97
035		184-23-6B / O-M29-1			
037		183-3-7B / 183-3-7B Dup / O-M29-2-FHAR	5 / 5	100	DSE 9/30/97
038		183-3-7C / 183-3-7C Dup / O-M29-2-5% 10%	5 / 5	100	DSE 9/30/97
039		183-3-7D / 183-3-7D Dup / O-M29-2-BHAR	5 / 5	100	DSE 9/30/97

Comments: See page 1 of 5

REV 07/26/93 (PSTMF 7)

TRIANGLE LABORATORIES, INC.

Sample Preparation Tracking & Management Form

Project: 43231 Client: Pacific Environmental Services (PES03)

Method: 7470 Extraction Date: 9/29/97 Hg

Solvent/Acids(): HNO3/H2SO4 Lot: 117040/317020

Sample Record	TLI SAMPLE ID / CLIENT SAMPLE ID	Sample Wgt g / Vol ml (DSE 9/29/97)	Final Volume ml (DSE 9/29/97)	Extraction Date				
0	183-3-7E / 183-3-7E Dup O-M29-2-KMNO4	5/5	100	DSE 9/30/97				
1	183-3-7F / 183-3-7F Dup O-M29-2-HCL	5/5	100	DSE 9/30/97				
2	184-23-7A B / 184-23-7AB D O-M29-2	5/5	100	me 10/6/97				
043	184-23-7B O-M29-2							
044	183-3-8B / 183-3-8B Dup O-M29-3-FHAR	5/5	100	DSE 9/30/97				
045	183-3-8C / 183-3-8C Dup O-M29-3-5% 10%	5/5	100	DSE 9/30/97				
046	183-3-8D / 183-3-8D Dup O-M29-3-BHAR	5/5	100	DSE 9/30/97				
7	183-3-8E / 183-3-8E Dup O-M29-3-KMNO4	5/5	100	DSE 9/30/97				
8	183-3-8F / 183-3-8F Dup O-M29-3-HCL	5/5	100	DSE 9/30/97				
9	184-23-8A B / 184-23-8AB D O-M29-3	5/5	100	me 10/6/97				
0	184-23-8B O-M29-3							
1	183-3-5B / 183-3-5B Dup O-M29-FHAR	5/5	100	DSE, me 9/29/97				
052	183-3-5C / 183-3-5C Dup O-M29-BLK-5% 10%	5/5	100	DSE, me 9/29/97				

Comments: See page 1 of 5

REV 07/26/93 (PSTMF 7)

TRIANGLE LABORATORIES, INC.

Sample Preparation Tracking & Management Form

Project: 43231

Client: Pacific Environmental Services (PES03)

Hg

Method: 7470

Solvent/Acids(): HNO_3/H_2SO_4

Extraction Date: 9/24/97

Lot: 117040/317020

Sample Information

Sample # crd	TLI SAMPLE ID / CLIENT SAMPLE ID	Sample Wgt g / Vol ml (DSE 9/24/97)	Final Volume ml (DSE 9/29/97)	Extraction Date					
053	183-3-5D / O-M29-BLK-BHAR	5/5	100	me for DSE 9/27/97					
054	183-3-5E / O-M29-BLK-KMNO4	5/5	100	↓					
055	183-3-5F,E / ~~183-3-5E,5F Dup~~ O-M29-BLK-HCL	5/5	100	me for DSE 9/27/97					
056	184-23-9A,B / 184-23-9A,B O-M29-FIELD BLANK	5/5	100	me 10/6/97					
057	184-23-9B / O-M29-FIELD BLANK								
058	183-15-1B / ~~183-15-1B Dup~~ Reagent Blank	5/5	prep'd 10/7/97 DSE 100	DSE 10/7/97					
059	183-15-1C / ~~183-15-1C Dup~~ Reagent Blank	5/5	prep'd 10/7/97 DSE 100	DSE 10/7/97					
060	183-15-1D,B / ~~183-15-1D,B Dup~~ Reagent Blank	5/5	prep'd 10/7/97 100 DSE	↓					
061	183-15-1E / ~~183-15-1E Dup~~ Reagent Blank	5/5	100	DSE 10/7/97					
062	184-23-5 / 184-23-5,10A,10B,183-15-1B Dup I-M29-REAGENT BLANK	5/5	100	DSE 10/7/97					
063	184-23-10A / O-M29-REAGENT BLANK								
064	184-23-10B / O-M29-REAGENT BLANK	DRY							
065	LCS / LCS'D Lab Control Spike	N/A	100	DSE 9/24/97					

Comments: See page 1 of 5

REV 07/26/93 (PSTMF 7)

TRIANGLE LABORATORIES, INC.

Sample Preparation Tracking & Management Form

Project: 43231 Client: Pacific Environmental Services (PES03)

Hg.

Sample Information

Method: 7470 Extraction Date: 9/30/97

Solvent/Acids(): HNO_3/H_2SO_4 Lot: 117040/317020

Sample #	TLI SAMPLE ID / CLIENT SAMPLE ID	Sample Wgt / Vol g / ml (DSE 9/24/97)	Final Volume ml	__/__/__	Extraction Date __/__/__	__/__/__	__/__/__	__/__/__	__/__/__
01	TLI Blank 2 / TLI MB2D / TLI Method Blank	5/5	100		DSE 9/30/97				
01	LCS2 / LCS2D / Lab Control Spike	5/5	100		DSE 9/30/97				
	183-3-3C MS / 183-3-3C MSD	5/5	100		DSE 9/24/97				
	183-3-2C MS / 183-3-2C MSD	5/5	100		DSE 9/24/97				
	183-3-4C MS / 183-3-4C MSD	5/5	100		DSE 9/24/97				
	183-3-6C MS / 183-3-6C MSD	5/5	100		DSE 9/30/97				
	183-3-7E MS / 183-3-7E MSD	5/5	100		DSE 9/30/97				
	184-23-1ABMS / 184-23-1ABMSD	5/5	100		MR 10/6/97				
	183-15-10 MS (DSE 10/17/97) / 183-15-10D MSD (DSE 10/17/97)	5/5	100		DSE 10/17/97				
	183-3-1BC MS / 183-3-1BC MSD	5/5	100		MR 10/10/97				
	LCS3 / LCS3D	5/5	100		MR 10/6/97				
	MB3 / MB3D	5/5	100		MR 10/6/97				
	MB4 / MB4D	5/5	100		DSE 10/17/97				

Comments: See page 1

REV 07/26/93 (PSTMF 7)

TRIANGLE LABORATORIES, INC.

Sample Preparation Tracking & Management Form

Project: 43231

Client: Pacific Environmental Services (PES03)

Sample Information

Method: 7470

Extraction Date: 9/30/97

Solvent/Acids(): HNO3, H2SO4

Lot: 117040, 317020

Hg

Sample # crd	TLI SAMPLE ID / CLIENT SAMPLE ID	Sample Wgt g / Vol ml (DSE 9/29/97)	Final Volume ml	___/___/___	Extraction Date ___/___/___	___/___/___	___/___/___	___/___/___	___/___/___
000	TLI Blank 5 MB5D / TLI Method Blank	5/5	100		mc 10/10/97				
065	LCS 4 LCS4D / Lab Control Spike	5/5	100		DSE 10/7/97				
	LCS5 LCS5D	5/5	100		mc 10/10/97				

Comments: See page 1

REV 07/26/93 (PSTMF 7)

MERCURY SPIKE LOG

DATE	PROJECT # SAMPLE IDs	ORIGINAL SPIKE CONC. (Hg)	STANDARD # WORKING STANDARD PREPARED FROM	SPIKE AMOUNT (mL)	SPIKE SAMPLE (PPB)	INITIALS	WITNESS
9/24/97	43048	0.1ppm	3-016-8	5	5	MR	DSE
	181-18-13BMS 181-18-13BMSD	↓	↓	↓	↓	↓	↓
9/25/97	43159A LCS LCSD	0.1ppm	3-018-2	5	5	MR	DSE
	182-30-1G AB MS 182-30-1G AB MSD	↓	↓	↓	↓	↓	↓
	182-30-9C AB MS 182-30-9C AB MSD	↓	↓	↓	↓	↓	↓
	182-58-1 MS 182-58-1 MSD	↓	↓	↓	↓	↓	↓
	182-30-1F MS 182-30-1F MSD	↓	↓	↓	↓	↓	↓
	182-30-4D MS 182-30-4D MSD	↓	↓	↓	↓	↓	↓
9/26/97	43159A LCS2 LCS2D	0.1ppm	3-018-2	5	5	MR	SRB
	182-30-11F MS 182-30-11F MSD	↓	↓	↓	↓	↓	↓
	182-30-13G MS 182-30-13G MSD	↓	↓	↓	↓	↓	↓
9/29/97	43159A LCS3 LCS3D	0.1ppm	3-018-2	5	5	DSE	SRB
	182-30-9E MS 182-30-9E MSD	↓	↓	↓	↓	↓	↓
	43231 LCS1 LCS1D	↓	↓	↓	↓	↓	↓
	183-3-3C MS 183-3-3C MSD	↓	↓	↓	↓	↓	↓
	183-3-2C MS 183-3-2C MSD	↓	↓	↓	↓	↓	↓
9/29/97	43231 LCS2 LCSD2	0.1ppm	3-018-2	5	5	DSE	SF
	183-3-4C MS 183-3-4C MSD	↓	↓	↓	↓	↓	↓
	183-3-6C MS 183-3-6C MSD	↓	↓	↓	↓	↓	↓
	183-3-7E MS 183-3-7E MSD	↓	↓	↓	↓	↓	↓

MERCURY SPIKE LOG

DATE	PROJECT # SAMPLE IDs	ORIGINAL SPIKE CONC. (Hg)	STANDARD # WORKING STANDARD PREPARED FROM	SPIKE AMOUNT (mL)	SPIKE SAMPLE (PPB)	INITIALS	WITNESS
9/30/97	43159-A LCS4 LCS4D	0.1 ppm	3-018-2	5	5	DSE	MR
	182-30-7E MS 182-30-7E MSD						
	43233-B LCS LCSD						
	183-5-1 MS 183-5-1 MSD						
	43231-LCS3 LCS3D						
	183-3-2E MS 183-3-2E MSD						
	183-3-8E MS 183-3-8E MSD						
10/2/97	413287 A LCS LCSD	0.1 ppm	3-018-2	5	5	ME	SRB
	183-59-3 MS 183-59-3 MSD						
	43233A LCS LCSD						
	183-5-1 MS 183-5-1 MSD						
10/4/97	43283 B LCS LCSD	0.1 ppm	3-018-6	5	5	ME	SRB
	183-55-1C MS 183-55-1C MSD		3-019-6				
	183-55-8C MS 183-55-8C MSD						
	4 11-4-97 EE						
10/6/97	43231 LCS3 LCS3D	0.1 ppm	3-019-6	5	5	ME	SF
	184-23-1A MS 184-23-1A MSD						
	5 11-4-97 EE						
10/7/97	43231 LCS4 LCS4D	0.1 ppm	3-019-6	5	5	DSE	MR
	183-15-1B MS 183-15-1B MSD						
	1BD 11-4-97 EE						

MERCURY SPIKE LOG

DATE	PROJECT # SAMPLE IDs	ORIGINAL SPIKE CONC. (Hg)	STANDARD # WORKING STANDARD PREPARED FROM	SPIKE AMOUNT (mL)	SPIKE SAMPLE (PPB)	INITIALS	WITNESS
10/8/97	43271 LCS1 LCSD	0.1 ppm	3-019-6	5	5	DSE	SEB
	183-43-1C MS 183-43-1C MSD	↓	↓	↓	↓	↓	↓
	183-43-2C MS 183-43-2C MSD	↓	↓	↓	↓	↓	↓
	183-43-3C MS 183-43-3C MSD	↓	↓	↓	↓	↓	↓
10/8/97	43159 LCS4 LCS4D	0.1 ppm	3-019-6	5	5	MR	DSE
	182-30-7BD MS 182-30-7BD MSD	↓	↓	↓	↓	↓	↓
	43271 LCS2 LCS2D	↓	↓	↓	↓	↓	↓
	183-43-5C MS 183-43-5C MSD	↓	↓	↓	↓	↓	↓
	183-43-7C MS 183-43-7C MSD	↓	↓	↓	↓	↓	↓
10/10/97	43271 LCS3 LCS3D	0.1 ppm	3-019-6	5	5	MR	SF
	183-43-8C MS 183-43-8C MSD	↓	↓	↓	↓	↓	↓
	183-43-11C MS 183-43-11C MSD	↓	↓	↓	↓	↓	↓
	43231 LCS5 LCS5D	11-4-97 EC	↓	↓	↓	↓	↓
	183-3-1BC MS 183-3-1BC MSD	↓	↓	↓	↓	↓	↓

Autosampler Loading Map

Element File: TOGEEP

ID/Weight File: EB160.IDW

SRB 9/29/97

Loc.	Concentration	Solutions
0		Calib. Blank / Diluent / ICB / CCB
1	50.0 ug/L	Stock 1-60-1P
2	100.0 ug/L	Stock / Recovery Stock 1-60-2P
4		ICV=30ug/L 1-60-3P
5		CCV=60ug/L 1-60-4P
6		CHECK LO
7		43231 MB
8		43231 LCS
9		183-3-1B
10		183-3-2B
11		183-3-2B L
12		183-3-3B
13		183-3-4B
14		183-3-5B
15		183-3-6B
16		183-3-7B
17		183-3-8B
18		183-3-1BC
19		183-3-2C
20		183-3-2C L
21		183-3-3C
22		183-3-4C
23		183-3-5B~~C~~D 10-27-97 EE
24		183-3-6C
25		183-3-7C
26		183-3-8C
39		Modifier 1

SRB 9/29/97

Element: File: TL.GEL
Print Data: Main+Suppl.
Print: Calib. Curve

Analyst: HOLSTE
Peak Storage: 1 Repl./Sample

SRB 9/29/97

INSTRUMENT: 4100 ZL
Wavelength: 276.8 Peak
Signal Type: Zeeman AA
Read Time: 5.0
Sample Replicates: 2
Standard Replicates: 2

Technique: HGA
Slit: 0.70 Low
Signal Measurement: Peak Area
Read Delay: 0.0
Spike Replicates: Same as Sample

Version: 7.30
BOC Time: 2

CALIBRATION:

Solutions	ID	Conc	Location	Volume	Diluent Volume	Modifier #1	Modifier #2
Calib. Blank	STD BLK		0	20	5	5	
Standard 1	STD1=25ug/L	25.0	1	10	15	5	
Standard 2	STD2=50ug/L	50.0	1	20	5	5	
Standard 3	STD3=100ug/L	100.0	2	20	5	5	
Reslope Std.	50ug/L	50.0	1	20	5	5	
Samples				20	5	5	

Diluent Location: 0
Modifier #1 Location: 39
Modifier #2 Location:
Calibration Units: ug/L
Sample Units: ug/L
Calibration Type: Nonlinear

Furnace Time/Temperature Program:

Step	Temp	Ramp	Hold	Gas Flow	Read	Gas Type
1	110	5	30	250		Norm
2	130	1	35	250		Norm
3	700	5	20	250		Norm
4	1600	0	5	0	*	Norm
5	2500	1	5	250		Norm

Injection Temp: 20 Pipette Speed: 85% Extraction System: On

SEQUENCE:

Step	Action and Parameters
1	Pipet diluent + modifier 1 + spike + sample/std
2	Run HGA steps 1 to End

CHECKS:
Recalibration Type: Reslope
Locations: None

Conc. Above Calibration Action: Dilute & Reanalyze After 1 Rep
Alternate Sample Volumes (uL): 5,2,1
Run Alternate Volume Blanks: Yes

If %RSD > 20.0 and Concentration > 1.7 then Retry 1 times
Check %RSD on: Samples + Standards + Spikes + QC Samples

Recovery Measurements:
5 uL of 100 ug/L Standard at Location 2 Gives 25.0 ug/L
Measure Recovery on Samples: 10,11,19,20
Add to QC Samples: Yes % Recovery Limits: 75 to 125

#	A/S Loc.	QC Sample ID	Conc. Limits Lower	Upper	After Calib	Periodic Check	At End	Count As Sample
1	4	ICV=30ug/L	27.0	33.0				
2	0	ICB	-2.0	2.0				
3	5	CCV=60ug/L	48.0	72.0	X	X	X	
4	0	CCB	-2.0	2.0	X	X	X	

Run Periodic QC Samples: Every 10
Out of Limit Action: Reslope and Rerun Samples

Matrix Check Calculations:
% Difference for Dupls: No Locations:
% Recovery for Spike: No Locations: Conc:

```
Element File: TL.GEL          Element: Tl                    Wavelength: 276.8
Date: 09/29/97                Time: 00:41                    Slit: 0.70 L
Data File: EB160.DAT          ID/Wt File: EB160.IDW          Lamp Current: 0
Technique: HGA                Calib. Type: Nonlinear         Energy: 48
-----------------------------------------------------------------------------
~~~~~~~~~~~~~~~~~~~~~~~~~~~~~~~~~~~~~~~~~~~~~~~~~~~~~~~~~~~~~~~~~~~~~~~~~~~~
Tl    ID: STD BLK            Seq. No.: 00001    A/S Pos.: 0     Date: 09/29/97

uL dispensed: 5 from 0, 5 from 39, 20 from 0
Replicate  1                              Time: 00:44
Peak Area (A-s): 0.001                    Peak Height (A): 0.007
Background Pk Area (A-s): 0.001           Background Pk Height (A): 0.006
Blank Corrected Pk Area (A-s): 0.001

uL dispensed: 5 from 0, 5 from 39, 20 from 0
Replicate  2 (Peak Stored)                Time: 00:47
Peak Area (A-s): 0.000                    Peak Height (A): 0.008
Background Pk Area (A-s): 0.001           Background Pk Height (A): 0.005
Blank Corrected Pk Area (A-s): 0.000

Mean Pk Area (A-s):      0.001            SD: 0.0002                RSD(%): 41.09

Auto-zero performed.

~~~~~~~~~~~~~~~~~~~~~~~~~~~~~~~~~~~~~~~~~~~~~~~~~~~~~~~~~~~~~~~~~~~~~~~~~~~~
Tl    ID: STD1=25ug/L        Seq. No.: 00002    A/S Pos.: 1     Date: 09/29/97

uL dispensed: 15 from 0, 5 from 39, 10 from 1
Replicate  1                              Time: 00:50
Peak Area (A-s): 0.039                    Peak Height (A): 0.054
Background Pk Area (A-s): 0.020           Background Pk Height (A): 0.030
Blank Corrected Pk Area (A-s): 0.039

uL dispensed: 15 from 0, 5 from 39, 10 from 1
Replicate  2 (Peak Stored)                Time: 00:53
Peak Area (A-s): 0.038                    Peak Height (A): 0.053
Background Pk Area (A-s): 0.022           Background Pk Height (A): 0.030
Blank Corrected Pk Area (A-s): 0.038

Mean Pk Area (A-s):      0.038            SD: 0.0006                RSD(%): 1.50

Standard number 1 applied.  [25.0]
Correlation coefficient: 1.00000          Slope: 0.0015

~~~~~~~~~~~~~~~~~~~~~~~~~~~~~~~~~~~~~~~~~~~~~~~~~~~~~~~~~~~~~~~~~~~~~~~~~~~~
Tl    ID: STD2=50ug/L        Seq. No.: 00003    A/S Pos.: 1     Date: 09/29/97

uL dispensed: 5 from 0, 5 from 39, 20 from 1
Replicate  1                              Time: 00:56
Peak Area (A-s): 0.078                    Peak Height (A): 0.106
Background Pk Area (A-s): 0.042           Background Pk Height (A): 0.058
Blank Corrected Pk Area (A-s): 0.077
Concentration (ug/L  ): 50.5

uL dispensed: 5 from 0, 5 from 39, 20 from 1
Replicate  2 (Peak Stored)                Time: 00:59
Peak Area (A-s): 0.076                    Peak Height (A): 0.106
Background Pk Area (A-s): 0.042           Background Pk Height (A): 0.057
```

Concentration (ug/L): 49.4

Mean Conc (ug/L): 50.0 SD: 0.78 RSD(%): 1.57

Standard number 2 applied. [50.0]
Correlation coefficient: 1.00000 Slope: 0.0015

~~~
~~~

Element File: TL.GEL Element: Tl Wavelength: 276.8
Date: 09/29/97 Time: 01:05 Slit: 0.70 L
Data File: EB160.DAT ID/Wt File: EB160.IDW Lamp Current: 0
Technique: HGA Calib. Type: Nonlinear Energy: 53

~~~
~~~

Peak Area (A-s): 0.005 Peak Height (A): 0.010
Background Pk Area (A-s): 0.007 Background Pk Height (A): 0.007
Blank Corrected Pk Area (A-s): 0.005
Concentration (ug/L): 3.1

Mean Conc (ug/L): 3.5 SD: 0.61 RSD(%): 17.40

~~~
~~~

Blank Corrected Pk Area (A-s): 0.002
Concentration (ug/L): 1.2

Mean Conc (ug/L): 0.8 SD: 0.57 RSD(%): 69.10

~~~
~~~

Mean Conc (ug/L): 23.5 SD: 0.54 RSD(%): 2.31

Recovery is ~~88.3%~~ 94% 10-9-97

~~~
~~~

Blank Corrected Pk Area (A-s): 0.003
Concentration (ug/L): 1.7

Mean Conc (ug/L): 3.1 SD: 2.10 RSD(%): 66.81

~~~
~~~

Blank Corrected Pk Area (A-s): 0.001
Concentration (ug/L): 0.4

Mean Conc (ug/L): 0.2 SD: 0.24 RSD(%): 99.14

QC sample is within range -2.0 - 2.0

~~~
~~~

Blank Corrected Pk Area (A-s): 0.001
Concentration (ug/L): 0.8

Mean Conc (ug/L): 1.0 SD: 0.31 RSD(%): 30.76

~~~
~~~

Concentration (ug/L): -0.2

Mean Conc (ug/L): 0.6 SD: 1.12 RSD(%): 201.09

~~~
~~~

Mean Conc (ug/L): -1.3 SD: 0.02 RSD(%): 1.60

~~~
~~~

Blank Corrected Pk Area (A-s): 0.043
Concentration (ug/L): 27.9

Mean Conc (ug/L): 28.1 SD: 0.17 RSD(%): 0.60

QC sample is out of range 48.0 - 72.0

~~~
~~~

Background Pk Area (A-s): 0.002 Background Pk Height (A): 0.005
Blank Corrected Pk Area (A-s): -0.002
Concentration (ug/L): -1.2

uL dispensed: 5 from 0, 5 from 39, 20 from 21
Replicate 2 (Peak Stored) Time: 04:04
Peak Area (A-s): 0.001 Peak Height (A): 0.007
Background Pk Area (A-s): -0.000 Background Pk Height (A): 0.006
Blank Corrected Pk Area (A-s): 0.001
Concentration (ug/L): 0.4

Mean Conc (ug/L): -0.4 SD: 1.11 RSD(%): 299.46

~~~
~~~

Concentration (ug/L): -0.6

uL dispensed: 5 from 0, 5 from 39, 20 from 24
Replicate 2 (Peak Stored) Time: 04:22
Peak Area (A-s): 0.002 Peak Height (A): 0.006
Background Pk Area (A-s): -0.002 Background Pk Height (A): 0.006
Blank Corrected Pk Area (A-s): 0.002
Concentration (ug/L): 1.1

Mean Conc (ug/L): 0.2 SD: 1.19 RSD(%): 477.58

~~~
~~~

Replicate 2 (Peak Stored) Time: 04:40
Peak Area (A-s): 0.088 Peak Height (A): 0.096
Background Pk Area (A-s): 0.049 Background Pk Height (A): 0.053
Blank Corrected Pk Area (A-s): 0.088
Concentration (ug/L): 57.4

Mean Conc (ug/L): 57.1 SD: 0.40 RSD(%): 0.70

QC sample is within range 48.0 - 72.0

~~~
~~~

Autosampler Loading Map
Element File: TL.GEL ID/Weight File: EB165.IDW

Loc.	Concentration	Solutions
0		Calib. Blank / Diluent / ICB / CCB
1	50.0 ug/L	Stock 1-60-8P
2	100.0 ug/L	Stock / Recovery Stock 1-60-9P
4		ICV=30ug/L 1-60-10P
5		CCV=60ug/L 1-60-11P
6		CHECK LO
7		43231 MB
8		43231 LCS
9		184-23-1AB
10		184-23-2AB
11		184-23-2AB L
12		184-23-3AB
13		184-23-4AB
14		184-23-6AB
15		184-23-7AB
16		184-23-8AB
17		184-23-9AB
18		184-23-10AB 5
19		183-15-1C
20		183-15-1BC
39		Modifier 1

10/7/97 DKH

MSA Data USED For 7AB, 9AB & 183-~~15-1BC~~ 3-1BC

* Only 1 run of MSA's completed due to instrumentation problems

DKH 10/13/97

```
-----------------------------------------------------------------------------
Element File: TL.GEL          Element: Tl                  Wavelength: 276.8
Date: 10/07/97                Time: 05:56                  Slit: 0.70 L
Data File: EB165.DAT          ID/Wt File: EB165.IDW        Lamp Current: 0
Technique: HGA                Calib. Type: Nonlinear       Energy: 53
-----------------------------------------------------------------------------
~~~~~~~~~~~~~~~~~~~~~~~~~~~~~~~~~~~~~~~~~~~~~~~~~~~~~~~~~~~~~~~~~~~~~~~~~~~~
Tl     ID: STD BLK            Seq. No.: 00001    A/S Pos.: 0     Date: 10/07/97

uL dispensed: 5 from 0, 5 from 39, 20 from 0
Replicate  1                          Time: 05:58
Peak Area (A-s): -0.000               Peak Height (A): 0.006
Background Pk Area (A-s): 0.015       Background Pk Height (A): 0.011
Blank Corrected Pk Area (A-s): 0.001
Concentration (ug/L  ): 0.6

uL dispensed: 5 from 0, 5 from 39, 20 from 0
Replicate  2 (Peak Stored)            Time: 06:01
Peak Area (A-s): -0.002               Peak Height (A): 0.007
Background Pk Area (A-s): 0.002       Background Pk Height (A): 0.007
Blank Corrected Pk Area (A-s): -0.001
Concentration (ug/L  ): -0.6

Mean Conc  (ug/L  ):       -0.0       SD: 0.87                RSD(%): 7113.54

Auto-zero performed.

~~~~~~~~~~~~~~~~~~~~~~~~~~~~~~~~~~~~~~~~~~~~~~~~~~~~~~~~~~~~~~~~~~~~~~~~~~~~
Tl     ID: STD1=25ug/L        Seq. No.: 00002    A/S Pos.: 1     Date: 10/07/97

uL dispensed: 15 from 0, 5 from 39, 10 from 1
Replicate  1                          Time: 06:04
Peak Area (A-s): 0.035                Peak Height (A): 0.062
Background Pk Area (A-s): 0.023       Background Pk Height (A): 0.035
Blank Corrected Pk Area (A-s): 0.036
Concentration (ug/L  ): 21.6

uL dispensed: 15 from 0, 5 from 39, 10 from 1
Replicate  2 (Peak Stored)            Time: 06:07
Peak Area (A-s): 0.034                Peak Height (A): 0.056
Background Pk Area (A-s): 0.025       Background Pk Height (A): 0.035
Blank Corrected Pk Area (A-s): 0.035
Concentration (ug/L  ): 21.0

Mean Conc  (ug/L  ):       21.3       SD: 0.41                RSD(%): 1.92

Standard number 1 applied.  [25.0]
Correlation coefficient: 1.00000      Slope: 0.0014

~~~~~~~~~~~~~~~~~~~~~~~~~~~~~~~~~~~~~~~~~~~~~~~~~~~~~~~~~~~~~~~~~~~~~~~~~~~~
Tl     ID: STD2=50ug/L        Seq. No.: 00003    A/S Pos.: 1     Date: 10/07/97

uL dispensed: 5 from 0, 5 from 39, 20 from 1
Replicate  1                          Time: 06:10
Peak Area (A-s): 0.072                Peak Height (A): 0.116
Background Pk Area (A-s): 0.045       Background Pk Height (A): 0.072
Blank Corrected Pk Area (A-s): 0.073
Concentration (ug/L  ): 51.3
```

uL dispensed: 5 from 0, 5 from 39, 20 from 2
Replicate 2 (Peak Stored) Time: 06:13
Peak Area (A-s): 0.072 Peak Height (A): 0.113
Background Pk Area (A-s): 0.044 Background Pk Height (A): 0.070
Blank Corrected Pk Area (A-s): 0.074
Concentration (ug/L): 51.6

Mean Conc (ug/L): 51.5 SD: 0.22 RSD(%): 0.42

Standard number 2 applied. [50.0]
Correlation coefficient: 1.00000 Slope: 0.0014

~~~
~~~

Element File: TL.GEL Element: Tl Wavelength: 276.8
Date: 10/07/97 Time: 06:20 Slit: 0.70 L
Data File: EB165.DAT ID/Wt File: EB165.IDW Lamp Current: 0
Technique: HGA Calib. Type: Nonlinear Energy: 53

~~~~~~

Tl ID: ICV=30ug/L Seq. No.: 00005 A/S Pos.: 4 Date: 10/07/97

uL dispensed: 5 from 0, 5 from 39, 20 from 4
Replicate 1 Time: 06:23
Peak Area (A-s): 0.044 Peak Height (A): 0.074
Background Pk Area (A-s): 0.027 Background Pk Height (A): 0.042
Blank Corrected Pk Area (A-s): 0.045
Concentration (ug/L): 31.2

uL dispensed: 5 from 0, 5 from 39, 20 from 4
Replicate 2 (Peak Stored) Time: 06:26
Peak Area (A-s): 0.043 Peak Height (A): 0.069
Background Pk Area (A-s): 0.028 Background Pk Height (A): 0.039
Blank Corrected Pk Area (A-s): 0.044
Concentration (ug/L): 30.2

Mean Conc (ug/L): 30.7 SD: 0.66 RSD(%): 2.15

QC sample is within range 27.0 - 33.0

~~~~~~

Tl ID: ICB Seq. No.: 00006 A/S Pos.: 0 Date: 10/07/97

uL dispensed: 5 from 0, 5 from 39, 20 from 0
Replicate 1 Time: 06:29
Peak Area (A-s): 0.001 Peak Height (A): 0.006
Background Pk Area (A-s): 0.004 Background Pk Height (A): 0.006
Blank Corrected Pk Area (A-s): 0.002
Concentration (ug/L): 1.5

uL dispensed: 5 from 0, 5 from 39, 20 from 0
Replicate 2 (Peak Stored) Time: 06:32
Peak Area (A-s): -0.001 Peak Height (A): 0.006
Background Pk Area (A-s): 0.004 Background Pk Height (A): 0.006
Blank Corrected Pk Area (A-s): 0.000
Concentration (ug/L): 0.2

Mean Conc (ug/L): 0.9 SD: 0.98 RSD(%): 114.92

QC sample is within range -2.0 - 2.0

~~~~~~

Tl ID: CHECK LO Seq. No.: 00007 A/S Pos.: 6 Date: 10/07/97

uL dispensed: 5 from 0, 5 from 39, 20 from 6
Replicate 1 Time: 06:35
Peak Area (A-s): 0.005 Peak Height (A): 0.014
Background Pk Area (A-s): 0.008 Background Pk Height (A): 0.011
Blank Corrected Pk Area (A-s): 0.007
Concentration (ug/L): 4.5

uL dispensed: 5 from 0, 5 from 39, 20 from 6
~~~~~~

Replicate 2 (Peak Stored) Time: 06:37
Peak Area (A-s): 0.007 Peak Height (A): 0.013
Background Pk Area (A-s): 0.008 Background Pk Height (A): 0.009
Blank Corrected Pk Area (A-s): 0.009
Concentration (ug/L): 5.8

Mean Conc (ug/L): 5.2 SD: 0.95 RSD(%): 18.40

~~~
~~~

Background Pk Area (A-s): 0.009 Background Pk Height (A): 0.000
Blank Corrected Pk Area (A-s): 0.004
Concentration (ug/L): 2.9

Mean Conc (ug/L): 3.2 SD: 0.40 RSD(%): 12.26

~~~
~~~

Background Pk Area (A-s): 0.255 Background Pk Height (A): 0.151
Blank Corrected Pk Area (A-s): 0.002
Concentration (ug/L): 1.4

Mean Conc (ug/L): 1.9 SD: 0.72 RSD(%): 37.14

~~~
~~~

Background Pk Area (A-s): 0.949 Background Pk Height (A): 0.357
Blank Corrected Pk Area (A-s): 0.014
Concentration (ug/L): 9.4

Mean Conc (ug/L): 10.1 SD: 0.97 RSD(%): 9.61

~~~
~~~

Replicate 2 (Peak Stored) Time: 07:47
Peak Area (A-s): -0.001 Peak Height (A): 0.006
Background Pk Area (A-s): 0.065 Background Pk Height (A): 0.051
Blank Corrected Pk Area (A-s): 0.001
Concentration (ug/L): 0.4

Mean Conc (ug/L): 1.3 SD: 1.27 RSD(%): 94.51

~~~
~~~

Blank Corrected Pk Area (A-s): 0.003
Concentration (ug/L): 1.9

Mean Conc (ug/L): 1.3 SD: 0.92 RSD(%): 71.00

~~~
~~~

Concentration (ug/L): 0.2

Mean Conc (ug/L): 0.7 SD: 0.67 RSD(%): 103.21

~~~
~~~

QC sample is within range 48.0 - 72.0

~~~
~~~

Element File: TL_MSA.GEL Element: Tl Wavelength: 276.8
Date: 10/07/97 Time: 09:01 Slit: 0.70 L
Data File: EB165.DAT ID/Wt File: EB165.IDW Lamp Current: 0
Technique: HGA Calib. Type: Meth. of Add. Energy: 53

~~~~~~

Tl ID: AUTO ZERO Seq. No.: 00031 A/S Pos.: 0 Date: 10/07/97

uL dispensed: 10 from 0, 5 from 39, 10 from 0
Replicate 1 Time: 09:03
Peak Area (A-s): 0.000 Peak Height (A): 0.005
Background Pk Area (A-s): 0.002 Background Pk Height (A): 0.004
Blank Corrected Pk Area (A-s): 0.002

uL dispensed: 10 from 0, 5 from 39, 10 from 0
Replicate 2 (Peak Stored) Time: 09:06
Peak Area (A-s): -0.000 Peak Height (A): 0.006
Background Pk Area (A-s): 0.001 Background Pk Height (A): 0.008
Blank Corrected Pk Area (A-s): 0.001

Mean Pk Area (A-s): 0.002 SD: 0.0004 RSD(%): 26.89

Auto-zero performed.

~~~~~~

Tl ID: 184-23-1AB Seq. No.: 00032 A/S Pos.: 9 Date: 10/07/97

uL dispensed: 10 from 0, 5 from 39, 10 from 9
Replicate 1 Time: 09:09
Peak Area (A-s): 0.000 Peak Height (A): 0.006
Background Pk Area (A-s): 0.293 Background Pk Height (A): 0.165
Blank Corrected Pk Area (A-s): 0.000

uL dispensed: 10 from 0, 5 from 39, 10 from 9
Replicate 2 (Peak Stored) Time: 09:12
Peak Area (A-s): 0.002 Peak Height (A): 0.011
Background Pk Area (A-s): 0.331 Background Pk Height (A): 0.172
Blank Corrected Pk Area (A-s): 0.002

Mean Pk Area (A-s): 0.001 SD: 0.0013 RSD(%): 102.88

Tl ID: ADD 1 50 ug/L Seq. No.: 00033 A/S Pos.: 9 Date: 10/07/97

uL dispensed: 5 from 39, 10 from 1, 10 from 9
Replicate 1 Time: 09:15
Peak Area (A-s): 0.004 Peak Height (A): 0.010
Background Pk Area (A-s): 0.393 Background Pk Height (A): 0.195
Blank Corrected Pk Area (A-s): 0.004

uL dispensed: 5 from 39, 10 from 1, 10 from 9
Replicate 2 (Peak Stored) Time: 09:18
Peak Area (A-s): 0.002 Peak Height (A): 0.009
Background Pk Area (A-s): 0.413 Background Pk Height (A): 0.208
Blank Corrected Pk Area (A-s): 0.002

Mean Pk Area (A-s): 0.003 SD: 0.0014 RSD(%): 50.88

Tl ID: ADD 2 100ug/L Seq. No.: 00034 A/S Pos.: 9 Date: 10/07/97

uL dispensed: 5 from 39, 10 from 2, 10 from 9
Replicate 1 Time: 09:21
Peak Area (A-s): 0.004 Peak Height (A): 0.009
Background Pk Area (A-s): 0.400 Background Pk Height (A): 0.214
Blank Corrected Pk Area (A-s): 0.004

uL dispensed: 5 from 39, 10 from 2, 10 from 9
Replicate 2 (Peak Stored) Time: 09:24
Peak Area (A-s): 0.004 Peak Height (A): 0.012
Background Pk Area (A-s): 0.448 Background Pk Height (A): 0.214
Blank Corrected Pk Area (A-s): 0.004

Mean Pk Area (A-s): 0.004 SD: 0.0002 RSD(%): 5.00

Expansion)100 is not allowed. No calibration has occurred.
T1 ID: 184-23-1AB Seq. No.: 00032 A/S Pos.: 9 Date: 10/07/97

Concentration (ug/L): --------

~~~
~~~

Peak Area (A-s): 0.002 Peak Height (A): 0.009
Background Pk Area (A-s): 0.632 Background Pk Height (A): 0.266
Blank Corrected Pk Area (A-s): 0.002

uL dispensed: 5 from 39, 10 from 1, 10 from 10
Replicate 2 (Peak Stored) Time: 09:41
Peak Area (A-s): 0.003 Peak Height (A): 0.010
Background Pk Area (A-s): 0.661 Background Pk Height (A): 0.284
Blank Corrected Pk Area (A-s): 0.003

Mean Pk Area (A-s): 0.003 SD: 0.0006 RSD(%): 22.68

T1 ID: ADD 2 100ug/L Seq. No.: 00038 A/S Pos.: 10 Date: 10/07/97

uL dispensed: 5 from 39, 10 from 2, 10 from 10
Replicate 1 Time: 09:44
Peak Area (A-s): 0.004 Peak Height (A): 0.010
Background Pk Area (A-s): 0.664 Background Pk Height (A): 0.280
Blank Corrected Pk Area (A-s): 0.004

uL dispensed: 5 from 39, 10 from 2, 10 from 10
Replicate 2 (Peak Stored) Time: 09:47
Peak Area (A-s): 0.001 Peak Height (A): 0.008
Background Pk Area (A-s): 0.662 Background Pk Height (A): 0.279
Blank Corrected Pk Area (A-s): 0.001

Mean Pk Area (A-s): 0.003 SD: 0.0017 RSD(%): 63.99

Expansion >100 is not allowed. No calibration has occurred.
T1 ID: 184-23-2AB Seq. No.: 00036 A/S Pos.: 10 Date: 10/07/97

Concentration (ug/L): --------

~~~
~~~

Blank Corrected Pk Area (A-s): 0.003

uL dispensed: 10 from 0, 5 from 39, 10 from 12
Replicate 2 (Peak Stored) Time: 09:58
Peak Area (A-s): 0.007 Peak Height (A): 0.012
Background Pk Area (A-s): 0.575 Background Pk Height (A): 0.278
Blank Corrected Pk Area (A-s): 0.007

Mean Pk Area (A-s): 0.006 SD: 0.0011 RSD(%): 19.04

T1 ID: ADD 1 50 ug/L Seq. No.: 00041 A/S Pos.: 12 Date: 10/07/97

uL dispensed: 5 from 39, 10 from 1, 10 from 12
Replicate 1 Time: 10:01
Peak Area (A-s): 0.007 Peak Height (A): 0.012
Background Pk Area (A-s): 0.574 Background Pk Height (A): 0.277
Blank Corrected Pk Area (A-s): 0.007

uL dispensed: 5 from 39, 10 from 1, 10 from 12
Replicate 2 (Peak Stored) Time: 10:04
Peak Area (A-s): 0.004 Peak Height (A): 0.013
Background Pk Area (A-s): 0.539 Background Pk Height (A): 0.288
Blank Corrected Pk Area (A-s): 0.003

Mean Pk Area (A-s): 0.005 SD: 0.0023 RSD(%): 46.60

T1 ID: ADD 2 100ug/L Seq. No.: 00042 A/S Pos.: 12 Date: 10/07/9

uL dispensed: 5 from 39, 10 from 2, 10 from 12
Replicate 1 Time: 10:07
Peak Area (A-s): 0.003 Peak Height (A): 0.010
Background Pk Area (A-s): 0.342 Background Pk Height (A): 0.194
Blank Corrected Pk Area (A-s): 0.003

uL dispensed: 5 from 39, 10 from 2, 10 from 12
Replicate 2 (Peak Stored) Time: 10:10
Peak Area (A-s): 0.002 Peak Height (A): 0.010
Background Pk Area (A-s): 0.323 Background Pk Height (A): 0.198
Blank Corrected Pk Area (A-s): 0.002

Mean Pk Area (A-s): 0.002 SD: 0.0007 RSD(%): 32.76

Standard abs. & conc. values are not in the same order.
T1 ID: 184-23-3AB Seq. No.: 00040 A/S Pos.: 12 Date: 10/07/9

Concentration (ug/L): --------

~~~
~~~

Blank Corrected Pk Area (A-s): -0.001

Mean Pk Area (A-s): -0.001 SD: 0.0003 RSD(%): 40.06

Auto-zero performed.

~~~
~~~

Concentration (ug/L) vs. S.E.

Correlation coefficient: 0.96016 Slope: 0.0002

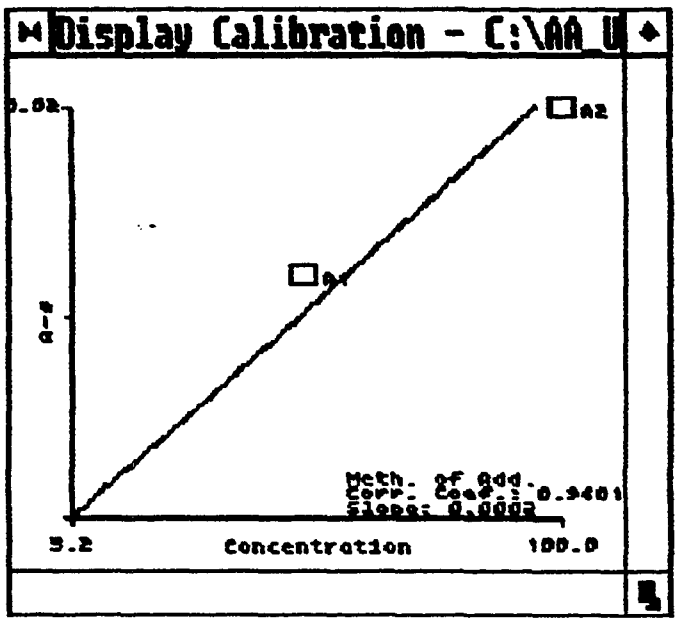


~~~
~~~

Mean Pk Area (A-s): -0.001 SD: 0.0013 RSD(%): 137.22

T1 ID: ADD 1 50 ug/L Seq. No.: 00049 A/S Pos.: 14 Date: 10/07/97

uL dispensed: 5 from 39, 10 from 1, 10 from 14
Replicate 1 Time: 10:48
Peak Area (A-s): 0.008 Peak Height (A): 0.013
Background Pk Area (A-s): 0.006 Background Pk Height (A): 0.009
Blank Corrected Pk Area (A-s): 0.009

uL dispensed: 5 from 39, 10 from 1, 10 from 14
Replicate 2 (Peak Stored) Time: 10:51
Peak Area (A-s): 0.007 Peak Height (A): 0.012
Background Pk Area (A-s): 0.008 Background Pk Height (A): 0.013
Blank Corrected Pk Area (A-s): 0.008

Mean Pk Area (A-s): 0.009 SD: 0.0006 RSD(%): 7.08

T1 ID: ADD 2 100ug/L Seq. No.: 00050 A/S Pos.: 14 Date: 10/07/97

uL dispensed: 5 from 39, 10 from 2, 10 from 14
Replicate 1 Time: 10:54
Peak Area (A-s): 0.014 Peak Height (A): 0.023
Background Pk Area (A-s): 0.014 Background Pk Height (A): 0.016
Blank Corrected Pk Area (A-s): 0.016

uL dispensed: 5 from 39, 10 from 2, 10 from 14
Replicate 2 (Peak Stored) Time: 10:57
Peak Area (A-s): 0.014 Peak Height (A): 0.022
Background Pk Area (A-s): 0.015 Background Pk Height (A): 0.019
Blank Corrected Pk Area (A-s): 0.015

Mean Pk Area (A-s): 0.015 SD: 0.0005 RSD(%): 3.58

The standard additions calibration curve may not be linear.
T1 ID: 184-23-6AB Seq. No.: 00048 A/S Pos.: 14 Date: 10/07/97

Concentration (ug/L): -5.5

Correlation coefficient: 0.96532 Slope: 0.0002

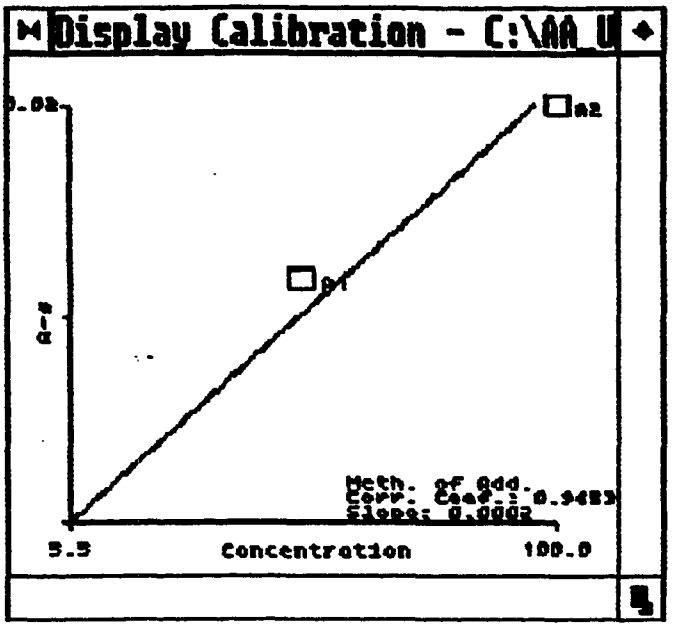
Display Calibration - C:\AA_U
Concentration
5.5
100.0

~~~
~~~

uL dispensed: 5 from 39, 10 from 1, 10 from 15
Replicate 1 Time: 11:11
Peak Area (A-s): 0.006 Peak Height (A): 0.012
Background Pk Area (A-s): 0.010 Background Pk Height (A): 0.011
Blank Corrected Pk Area (A-s): 0.006

uL dispensed: 5 from 39, 10 from 1, 10 from 15
Replicate 2 (Peak Stored) Time: 11:14
Peak Area (A-s): 0.007 Peak Height (A): 0.013
Background Pk Area (A-s): 0.009 Background Pk Height (A): 0.011
Blank Corrected Pk Area (A-s): 0.008

Mean Pk Area (A-s): 0.007. SD: 0.0011 RSD(%): 15.84

T1 ID: ADD 2 100ug/L Seq. No.: 00054 A/S Pos.: 15 Date: 10/07/97

uL dispensed: 5 from 39, 10 from 2, 10 from 15
Replicate 1 Time: 11:17
Peak Area (A-s): 0.015 Peak Height (A): 0.023
Background Pk Area (A-s): 0.014 Background Pk Height (A): 0.017
Blank Corrected Pk Area (A-s): 0.016

uL dispensed: 5 from 39, 10 from 2, 10 from 15
Replicate 2 (Peak Stored) Time: 11:20
Peak Area (A-s): 0.013 Peak Height (A): 0.023
Background Pk Area (A-s): 0.014 Background Pk Height (A): 0.015
Blank Corrected Pk Area (A-s): 0.014

Mean Pk Area (A-s): 0.015 SD: 0.0011 RSD(%): 7.66

T1 ID: 184-23-7AB Seq. No.: 00052 A/S Pos.: 15 Date: 10/07/97

Concentration (ug/L): -1.1

Correlation coefficient: 0.99987 Slope: 0.0001

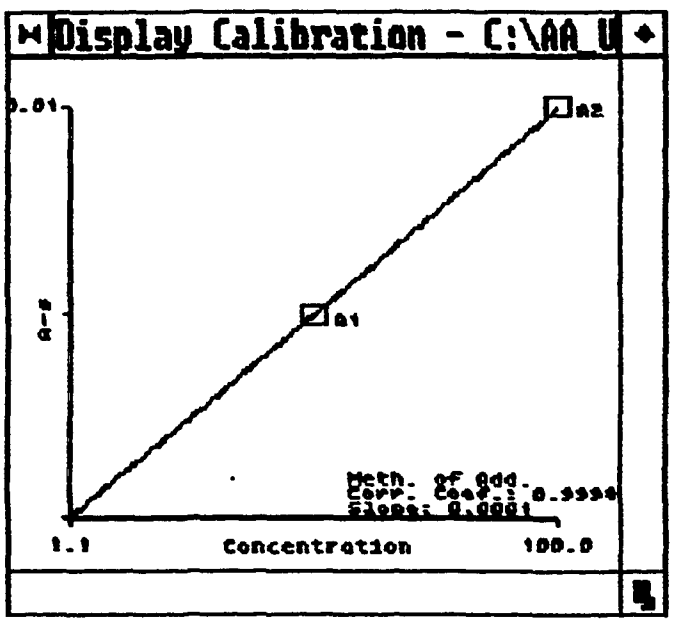

T1 ID: AUTO ZERO Seq. No.: 00055 A/S Pos.: 0 Date: 10/07/97

uL dispensed: 10 from 0, 5 from 39, 10 from 0
Replicate 1 Time: 11:23
Peak Area (A-s): -0.002 Peak Height (A): 0.006
Background Pk Area (A-s): 0.002 Background Pk Height (A): 0.006
Blank Corrected Pk Area (A-s): -0.001

uL dispensed: 10 from 0, 5 from 39, 10 from 0
Replicate 2 (Peak Stored) Time: 11:26
Peak Area (A-s): -0.002 Peak Height (A): 0.004
Background Pk Area (A-s): 0.002 Background Pk Height (A): 0.008
Blank Corrected Pk Area (A-s): -0.001

Mean Pk Area (A-s): -0.001 SD: 0.0001 RSD(%): 5.89

Auto-zero performed.

~~~
~~~

uL dispensed: 5 from 39, 10 from 0, 10 from 10
Replicate 2 (Peak Stored) Time: 11:44
Peak Area (A-s): 0.022 Peak Height (A): 0.029
Background Pk Area (A-s): 0.019 Background Pk Height (A): 0.020
Blank Corrected Pk Area (A-s): 0.024

Mean Pk Area (A-s): 0.024 SD: 0.0003 RSD(%): 1.40

The standard additions calibration curve may not be linear.
T1 ID: 184-23-8AB Seq. No.: 00056 A/S Pos.: 16 Date: 10/07/97

Concentration (ug/L): 7.5

Correlation coefficient: 0.98768 Slope: 0.0002

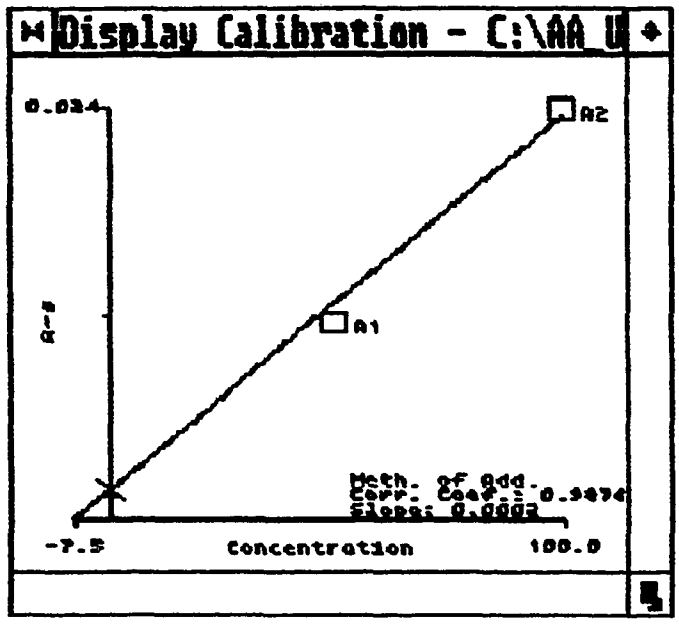


~~~
~~~

uL dispensed: 10 from 0, 5 from 39, 10 from 17
Replicate 1 Time: 11:52
Peak Area (A-s): -0.001 Peak Height (A): 0.005
Background Pk Area (A-s): 0.004 Background Pk Height (A): 0.007
Blank Corrected Pk Area (A-s): -0.001

uL dispensed: 10 from 0, 5 from 39, 10 from 17
Replicate 2 (Peak Stored) Time: 11:55
Peak Area (A-s): -0.001 Peak Height (A): 0.005
Background Pk Area (A-s): 0.004 Background Pk Height (A): 0.006
Blank Corrected Pk Area (A-s): -0.000

Mean Pk Area (A-s): -0.001. SD: 0.0001 RSD(%): 13.61

T1 ID: ADD 1 50 ug/L Seq. No.: 00061 A/S Pos.: 17 Date: 10/07/97

uL dispensed: 5 from 39, 10 from 1, 10 from 17
Replicate 1 Time: 11:58
Peak Area (A-s): 0.006 Peak Height (A): 0.012
Background Pk Area (A-s): 0.010 Background Pk Height (A): 0.011
Blank Corrected Pk Area (A-s): 0.007

uL dispensed: 5 from 39, 10 from 1, 10 from 17
Replicate 2 (Peak Stored) Time: 12:01
Peak Area (A-s): 0.007 Peak Height (A): 0.014
Background Pk Area (A-s): 0.009 Background Pk Height (A): 0.010
Blank Corrected Pk Area (A-s): 0.008

Mean Pk Area (A-s): 0.008 SD: 0.0006 RSD(%): 8.17

T1 ID: ADD 2 100ug/L Seq. No.: 00062 A/S Pos.: 17 Date: 10/07/97

uL dispensed: 5 from 39, 10 from 2, 10 from 17
Replicate 1 Time: 12:04
Peak Area (A-s): 0.016 Peak Height (A): 0.026
Background Pk Area (A-s): 0.015 Background Pk Height (A): 0.015
Blank Corrected Pk Area (A-s): 0.016

uL dispensed: 5 from 39, 10 from 2, 10 from 17
Replicate 2 (Peak Stored) Time: 12:07
Peak Area (A-s): 0.016 Peak Height (A): 0.025
Background Pk Area (A-s): 0.015 Background Pk Height (A): 0.017
Blank Corrected Pk Area (A-s): 0.017

Mean Pk Area (A-s): 0.017 SD: 0.0004 RSD(%): 2.51

T1 ID: 184-23-9AB Seq. No.: 00060 A/S Pos.: 17 Date: 10/07/97

Concentration (ug/L): -3.0

Correlation coefficient: 0.99868 Slope: 0.0002

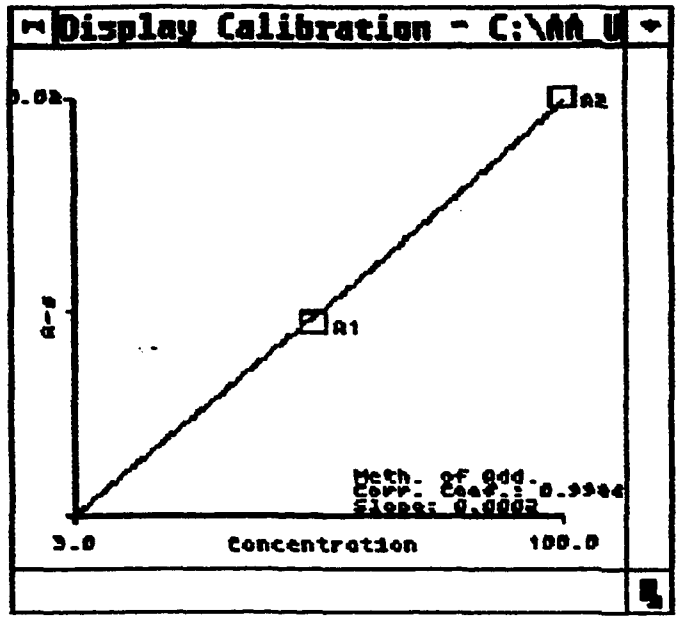
Display Calibration - C:\AA U
A2
A1
Concentration
100.0

~~~
~~~

uL dispensed: 5 from 39, 10 from 1, 10 from 18
Replicate 1 Time: 12:22
Peak Area (A-s): 0.013 Peak Height (A): 0.023
Background Pk Area (A-s): 0.013 Background Pk Height (A): 0.018
Blank Corrected Pk Area (A-s): 0.013

uL dispensed: 5 from 39, 10 from 1, 10 from 18
Replicate 2 (Peak Stored) Time: 12:25
Peak Area (A-s): 0.012 Peak Height (A): 0.021
Background Pk Area (A-s): 0.012 Background Pk Height (A): 0.018
Blank Corrected Pk Area (A-s): 0.013

Mean Pk Area (A-s): 0.013 SD: 0.0005 RSD(%): 3.45

T1 ID: ADD 2 100ug/L Seq. No.: 00066 A/S Pos.: 18 Date: 10/07/97

uL dispensed: 5 from 39, 10 from 2, 10 from 18
Replicate 1 Time: 12:28
Peak Area (A-s): 0.028 Peak Height (A): 0.041
Background Pk Area (A-s): 0.022 Background Pk Height (A): 0.030
Blank Corrected Pk Area (A-s): 0.029

uL dispensed: 5 from 39, 10 from 2, 10 from 18
Replicate 2 (Peak Stored) Time: 12:31
Peak Area (A-s): 0.028 Peak Height (A): 0.044
Background Pk Area (A-s): 0.026 Background Pk Height (A): 0.032
Blank Corrected Pk Area (A-s): 0.029

Mean Pk Area (A-s): 0.029 SD: 0.0001 RSD(%): 0.25

The standard additions calibration curve may not be linear.
T1 ID: 184-23-10AB 5 Seq. No.: 00064 A/S Pos.: 18 Date: 10/07/97

Concentration (ug/L): -0.3

Correlation coefficient: 0.99268 Slope: 0.0003

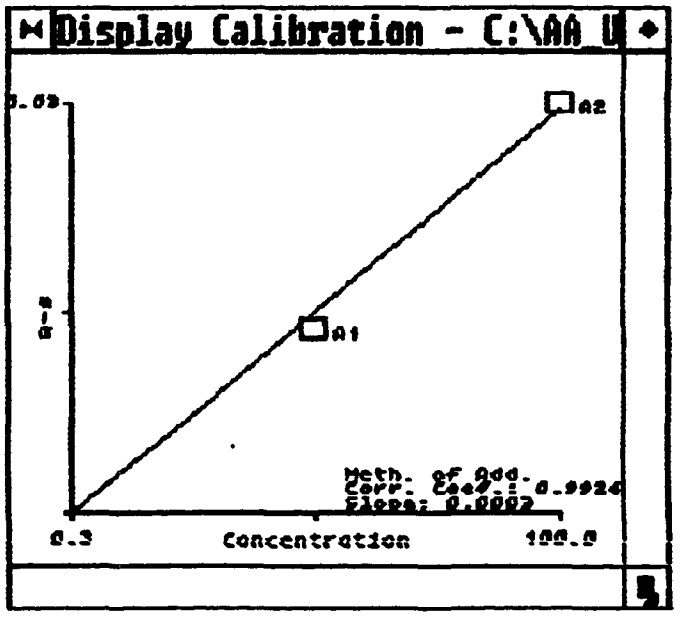

T1 ID: AUTO ZERO Seq. No.: 00067 A/S Pos.: 0 Date: 10/07/97

uL dispensed: 10 from 0, 5 from 39, 10 from 0
Replicate 1 Time: 12:34
Peak Area (A-s): 0.000 Peak Height (A): 0.005
Background Pk Area (A-s): -0.001 Background Pk Height (A): 0.005
Blank Corrected Pk Area (A-s): 0.001

uL dispensed: 10 from 0, 5 from 39, 10 from 0
Replicate 2 (Peak Stored) Time: 12:37
Peak Area (A-s): 0.001 Peak Height (A): 0.005
Background Pk Area (A-s): 0.001 Background Pk Height (A): 0.005
Blank Corrected Pk Area (A-s): 0.001

Mean Pk Area (A-s): 0.001 SD: 0.0004 RSD(%): 36.79

Auto-zero performed.

~~~
~~~

uL dispensed: 5 from 39, 10 from 2, 10 from 19
Replicate 2 (Peak Stored) Time: 12:54
Peak Area (A-s): 0.013 Peak Height (A): 0.023
Background Pk Area (A-s): 0.011 Background Pk Height (A): 0.016
Blank Corrected Pk Area (A-s): 0.013

Mean Pk Area (A-s): 0.013 SD: 0.0006 RSD(%): 4.59

The standard additions calibration curve may not be linear.
T1 ID: 183-15-1C Seq. No.: 00068 A/S Pos.: 19 Date: 10/07/97

Concentration (ug/L): -8.3

Correlation coefficient: 0.94840 Slope: 0.0001

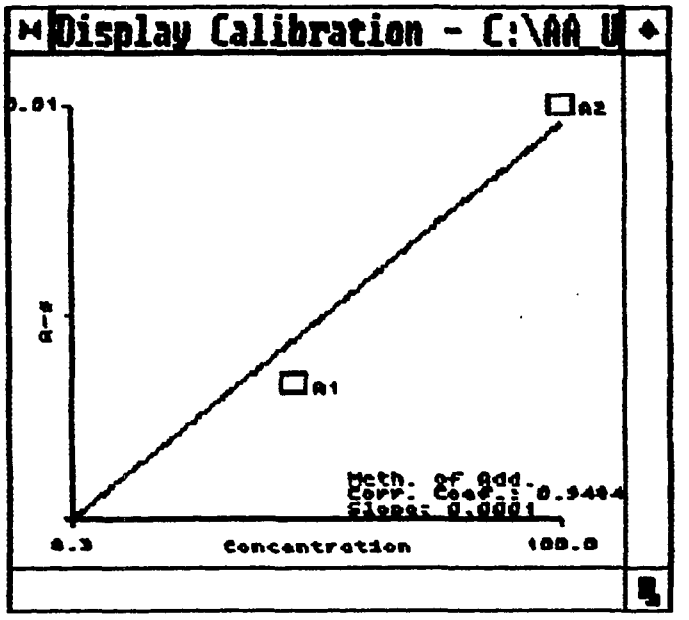


~~~
~~~

uL dispensed: 10 from 0, 5 from 39, 10 from 20
Replicate 1 Time: 13:03
Peak Area (A-s): -0.000 Peak Height (A): 0.006
Background Pk Area (A-s): 0.002 Background Pk Height (A): 0.006
Blank Corrected Pk Area (A-s): 0.001

uL dispensed: 10 from 0, 5 from 39, 10 from 20
Replicate 2 (Peak Stored) Time: 13:06
Peak Area (A-s): -0.001 Peak Height (A): 0.006
Background Pk Area (A-s): 0.001 Background Pk Height (A): 0.005
Blank Corrected Pk Area (A-s): 0.001

Mean Pk Area (A-s): 0.001 SD: 0.0003 RSD(%): 38.75

T1 ID: ADD 1 50 ug/L Seq. No.: 00073 A/S Pos.: 20 Date: 10/07/97

uL dispensed: 5 from 39, 10 from 1, 10 from 20
Replicate 1 Time: 13:09
Peak Area (A-s): 0.009 Peak Height (A): 0.014
Background Pk Area (A-s): 0.008 Background Pk Height (A): 0.012
Blank Corrected Pk Area (A-s): 0.010

uL dispensed: 5 from 39, 10 from 1, 10 from 20
Replicate 2 (Peak Stored) Time: 13:12
Peak Area (A-s): 0.007 Peak Height (A): 0.013
Background Pk Area (A-s): 0.007 Background Pk Height (A): 0.010
Blank Corrected Pk Area (A-s): 0.008

Mean Pk Area (A-s): 0.009 SD: 0.0011 RSD(%): 12.06

T1 ID: ADD 2 100ug/L Seq. No.: 00074 A/S Pos.: 20 Date: 10/07/97

uL dispensed: 5 from 39, 10 from 2, 10 from 20
Replicate 1 Time: 13:15
Peak Area (A-s): 0.014 Peak Height (A): 0.025
Background Pk Area (A-s): 0.010 Background Pk Height (A): 0.017
Blank Corrected Pk Area (A-s): 0.015

uL dispensed: 5 from 39, 10 from 2, 10 from 20
Replicate 2 (Peak Stored) Time: 13:18
Peak Area (A-s): 0.016 Peak Height (A): 0.028
Background Pk Area (A-s): 0.013 Background Pk Height (A): 0.017
Blank Corrected Pk Area (A-s): 0.017

Mean Pk Area (A-s): 0.016 SD: 0.0009 RSD(%): 5.39

T1 ID: 183-~~18~~3-1BC Seq. No.: 00072 A/S Pos.: 20 Date: 10/07/97
10-23-97 cc
Concentration (ug/L): 4.9

Correlation coefficient: 0.99633 Slope: 0.0002

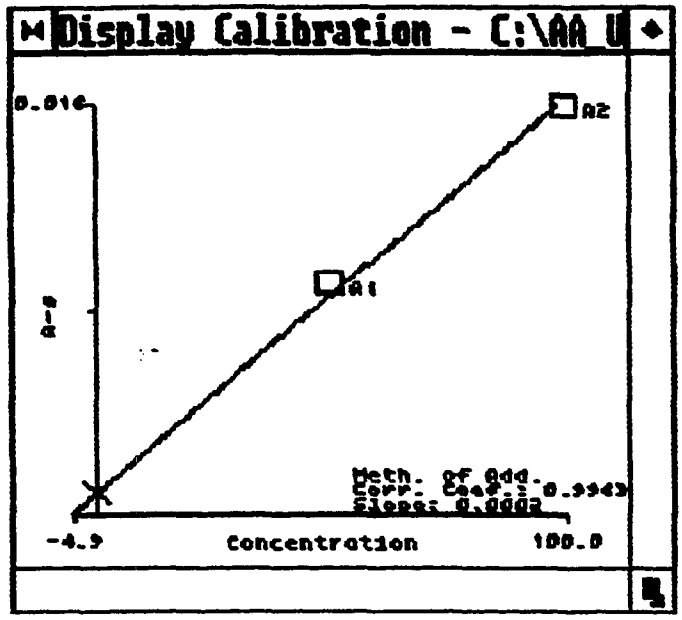
Display Calibration - C:\AA U
0.016
A2
A1
Meth. of Add.
Corr. Coef.: 0.9943
Slope: 0.0002
-4.9
Concentration
100.0

~~~
~~~

uL dispensed: 5 from 39, 10 from 2, 10 from 7
Replicate 2 (Peak Stored) Time: 01:00
Peak Area (A-s): 0.002 Peak Height (A): 0.007
Background Pk Area (A-s): 0.240 Background Pk Height (A): 0.133
Blank Corrected Pk Area (A-s): 0.003

Mean Pk Area (A-s): 0.002 SD: 0.0006 RSD(%): 24.79

Standard abs. & conc. values are not in the same order.
T1 ID: 184-23-1AB Seq. No.: 00076 A/S Pos.: 9 Date: 10/08/97

Concentration (ug/L): --------

~~~
~~~

Peak Area (A-s): 0.003 Peak Height (A): 0.009
Background Pk Area (A-s): 0.531 Background Pk Height (A): 0.237
Blank Corrected Pk Area (A-s): 0.004

Mean Pk Area (A-s): 0.004 SD: 0.0001 RSD(%): 1.97

T1 ID: ADD 2 100ug/L Seq. No.: 00082 A/S Pos.: 10 Date: 10/08/97

uL dispensed: 5 from 39, 10 from 2, 10 from 10
Replicate 1 Time: 01:20
Peak Area (A-s): 0.005 Peak Height (A): 0.009
Background Pk Area (A-s): 0.528 Background Pk Height (A): 0.242
Blank Corrected Pk Area (A-s): 0.006

uL dispensed: 5 from 39, 10 from 2, 10 from 10
Replicate 2 (Peak Stored) Time: 01:23
Peak Area (A-s): 0.003 Peak Height (A): 0.008
Background Pk Area (A-s): 0.523 Background Pk Height (A): 0.246
Blank Corrected Pk Area (A-s): 0.004

Mean Pk Area (A-s): 0.005 SD: 0.0014 RSD(%): 29.94

Expansion >100 is not allowed. No calibration has occurred.
T1 ID: 184-23-2AB Seq. No.: 00080 A/S Pos.: 10 Date: 10/08/97

Concentration (ug/L): --------

~~~
~~~

Blank Corrected Pk Area (A-s): 0.000

Mean Pk Area (A-s): 0.006 SD: 0.0015 RSD(%): 26.02

T1 ID: ADD 1 50 ug/L Seq. No.: 00085 A/S Pos.: 12 Date: 10/08/97

uL dispensed: 5 from 39, 10 from 1, 10 from 12
Replicate 1 Time: 01:37
Peak Area (A-s): 0.004 Peak Height (A): 0.008
Background Pk Area (A-s): 0.413 Background Pk Height (A): 0.183
Blank Corrected Pk Area (A-s): 0.005

uL dispensed: 5 from 39, 10 from 1, 10 from 12
Replicate 2 (Peak Stored) Time: 01:40
Peak Area (A-s): 0.006 Peak Height (A): 0.009
Background Pk Area (A-s): 0.431 Background Pk Height (A): 0.200
Blank Corrected Pk Area (A-s): 0.007

Mean Pk Area (A-s): 0.006 SD: 0.0018 RSD(%): 30.79

T1 ID: ADD 2 100ug/L Seq. No.: 00086 A/S Pos.: 12 Date: 10/08/97

uL dispensed: 5 from 39, 10 from 2, 10 from 12
Replicate 1 Time: 01:43
Peak Area (A-s): 0.003 Peak Height (A): 0.009
Background Pk Area (A-s): 0.442 Background Pk Height (A): 0.200
Blank Corrected Pk Area (A-s): 0.004

uL dispensed: 5 from 39, 10 from 2, 10 from 12
Replicate 2 (Peak Stored) Time: 01:46
Peak Area (A-s): 0.006 Peak Height (A): 0.012
Background Pk Area (A-s): 0.429 Background Pk Height (A): 0.194
Blank Corrected Pk Area (A-s): 0.007

Mean Pk Area (A-s): 0.005 SD: 0.0018 RSD(%): 32.93

Standard abs. & conc. values are not in the same order.
T1 ID: 184-23-3AB Seq. No.: 00084 A/S Pos.: 12 Date: 10/08/97

Concentration (ug/L): --------

~~~
~~~

T1 ID: 184-23-4AB Seq. No.: 00088 A/S Pos.: 13 Date: 10/08/97

uL dispensed: 10 from 0, 5 from 39, 10 from 13
Replicate 1 Time: 01:55
Peak Area (A-s): -0.001 Peak Height (A): 0.005
Background Pk Area (A-s): 0.002 Background Pk Height (A): 0.007
Blank Corrected Pk Area (A-s): 0.000

uL dispensed: 10 from 0, 5 from 39, 10 from 13
Replicate 2 (Peak Stored) Time: 01:58
Peak Area (A-s): -0.001 Peak Height (A): 0.006
Background Pk Area (A-s): 0.003 Background Pk Height (A): 0.007
Blank Corrected Pk Area (A-s): 0.000

Mean Pk Area (A-s): 0.000 SD: 0.0000 RSD(%): 19.18

T1 ID: ADD 1 50 ug/L Seq. No.: 00089 A/S Pos.: 13 Date: 10/08/97

uL dispensed: 5 from 39, 10 from 1, 10 from 13
Replicate 1 Time: 02:01
Peak Area (A-s): 0.027 Peak Height (A): 0.028
Background Pk Area (A-s): 0.025 Background Pk Height (A): 0.021
Blank Corrected Pk Area (A-s): 0.028

uL dispensed: 5 from 39, 10 from 1, 10 from 13
Replicate 2 (Peak Stored) Time: 02:03
Peak Area (A-s): 0.030 Peak Height (A): 0.030
Background Pk Area (A-s): 0.022 Background Pk Height (A): 0.023
Blank Corrected Pk Area (A-s): 0.030

Mean Pk Area (A-s): 0.029 SD: 0.0018 RSD(%): 6.15

T1 ID: ADD 2 100ug/L Seq. No.: 00090 A/S Pos.: 13 Date: 10/08/97

uL dispensed: 5 from 39, 10 from 2, 10 from 13
Replicate 1 Time: 02:06
Peak Area (A-s): 0.050 Peak Height (A): 0.054
Background Pk Area (A-s): 0.040 Background Pk Height (A): 0.038
Blank Corrected Pk Area (A-s): 0.051

uL dispensed: 5 from 39, 10 from 2, 10 from 13
Replicate 2 (Peak Stored) Time: 02:09
Peak Area (A-s): 0.048 Peak Height (A): 0.055
Background Pk Area (A-s): 0.038 Background Pk Height (A): 0.039
Blank Corrected Pk Area (A-s): 0.049

Mean Pk Area (A-s): 0.050 SD: 0.0012 RSD(%): 2.34

The standard additions calibration curve may not be linear.
T1 ID: 184-23-4AB Seq. No.: 00088 A/S Pos.: 13 Date: 10/08/97

Concentration (ug/L): 0.1

Correlation coefficient: 0.97916 Slope: 0.0005

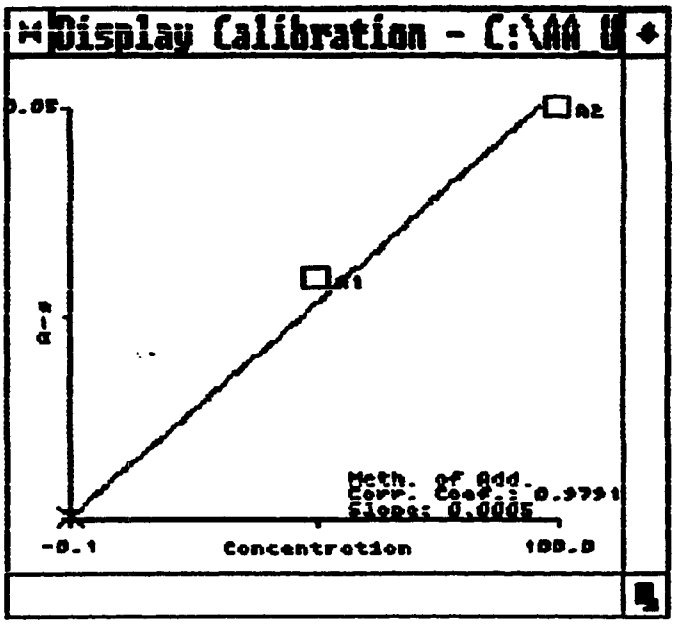
Display Calibration - C:\AA
0.05
A-s
A2
A1
Meth. of Add.
Corr. Coef.: 0.9791
Slope: 0.0005
-0.1
Concentration
100.0

~~~
~~~

uL dispensed: 5 from 39, 10 from 1, 10 from 14
Replicate 1 Time: 02:24
Peak Area (A-s): 0.017 Peak Height (A): 0.019
Background Pk Area (A-s): 0.014 Background Pk Height (A): 0.016
Blank Corrected Pk Area (A-s): 0.016

uL dispensed: 5 from 39, 10 from 1, 10 from 14
Replicate 2 (Peak Stored) Time: 02:27
Peak Area (A-s): 0.016 Peak Height (A): 0.021
Background Pk Area (A-s): 0.014 Background Pk Height (A): 0.015
Blank Corrected Pk Area (A-s): 0.015

Mean Pk Area (A-s): 0.016 SD: 0.0007 RSD(%): 4.46

T1 ID: ADD 2 100ug/L Seq. No.: 00094 A/S Pos.: 14 Date: 10/08/97

uL dispensed: 5 from 39, 10 from 2, 10 from 14
Replicate 1 Time: 02:30
Peak Area (A-s): 0.028 Peak Height (A): 0.034
Background Pk Area (A-s): 0.024 Background Pk Height (A): 0.028
Blank Corrected Pk Area (A-s): 0.027

uL dispensed: 5 from 39, 10 from 2, 10 from 14
Replicate 2 (Peak Stored) Time: 02:33
Peak Area (A-s): 0.026 Peak Height (A): 0.036
Background Pk Area (A-s): 0.022 Background Pk Height (A): 0.024
Blank Corrected Pk Area (A-s): 0.025

Mean Pk Area (A-s): 0.026 SD: 0.0011 RSD(%): 4.12

The standard additions calibration curve may not be linear.
T1 ID: 184-23-6AB Seq. No.: 00092 A/S Pos.: 14 Date: 10/08/97

Concentration (ug/L): -7.2

Correlation coefficient: 0.95424 Slope: 0.0003

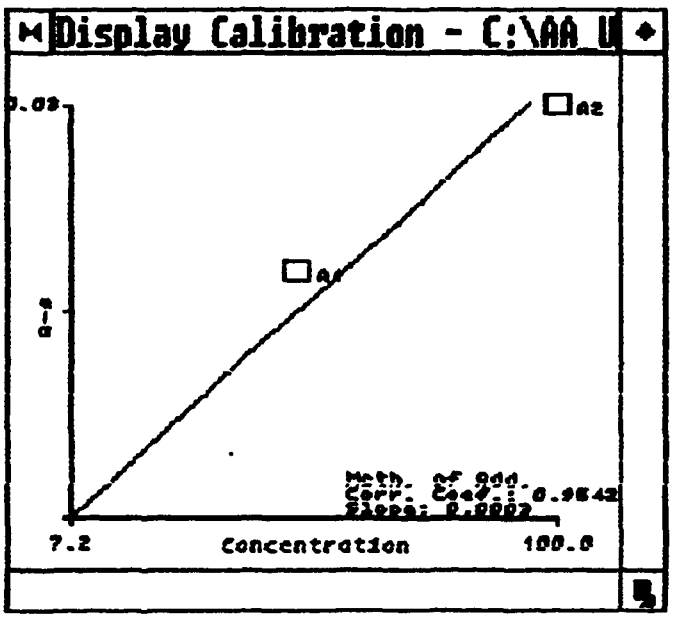

T1 ID: AUTO ZERO Seq. No.: 00095 A/S Pos.: 0 Date: 10/08/97

uL dispensed: 10 from 0, 5 from 39, 10 from 0
Replicate 1 Time: 02:36
Peak Area (A-s): -0.001 Peak Height (A): 0.006
Background Pk Area (A-s): 0.000 Background Pk Height (A): 0.005
Blank Corrected Pk Area (A-s): -0.002

uL dispensed: 10 from 0, 5 from 39, 10 from 0
Replicate 2 (Peak Stored) Time: 02:39
Peak Area (A-s): -0.001 Peak Height (A): 0.005
Background Pk Area (A-s): 0.001 Background Pk Height (A): 0.004
Blank Corrected Pk Area (A-s): -0.002

Mean Pk Area (A-s): -0.002 SD: 0.0000 RSD(%): 1.13

Auto-zero performed.

~~~
~~~

uL dispensed: 5 from 39, 10 from 2, 10 from 15
Replicate 2 (Peak Stored) Time: 02:56
Peak Area (A-s): 0.024 Peak Height (A): 0.032
Background Pk Area (A-s): 0.020 Background Pk Height (A): 0.022
Blank Corrected Pk Area (A-s): 0.025

Mean Pk Area (A-s): 0.027 SD: 0.0032 RSD(%): 11.85

T1 ID: 184-23-7AB Seq. No.: 00096 A/S Pos.: 15 Date: 10/08/97

Concentration (ug/L): 0.1

Correlation coefficient: 0.99972 Slope: 0.0003

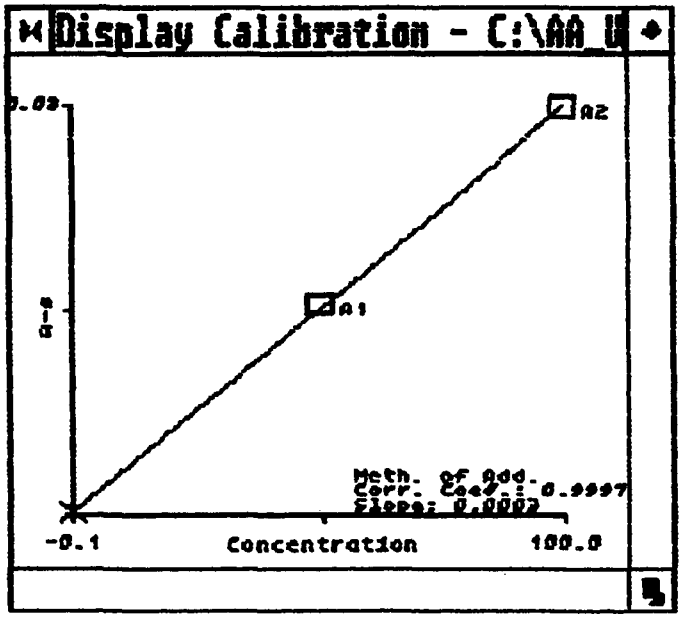


~~~
~~~

Tl ID: AUTO ZERO Seq. No.: 00101 A/S Pos.: 0 Date: 10/08/97

uL dispensed: 10 from 0, 5 from 39, 10 from 0

DKd 10/7/97

Table Name: HA451 Autosampler Type: TYPE TJA
Sample Positions: 150/192 QC Positions: 13/19 # Sets: 2
Rinse Station location is rack -1, pos. -1.

--- Racks ---

Rack #	Type	Usage	#Pos Left	Analyses/Pos
1	Aux. (L) Rack	STD/QC/BLANK	13	10
2	Sample (16mm)	Samples	6	1
3	Sample (16mm)	Samples	48	1
4	Sample (16mm)	Samples	48	1
5	Sample (16mm)	Samples	48	1

--- Sample Sets ---

Set#	Type	Prepare?	Description	Method	#Pos	Rack#	StartPos
1	Normal	No	43430	TRIANGL2	2	2	1
2	Normal	No	43231	TRIANGL2	40	2	3

This project completed on Table HA452.
DKd 10/8/97

--- Preparation Info ---

Set#	Uptake	Uptake#2	Final	Dil.Factor

No Samples Prepared.

Rack #1

Pos	Row	Col	Sample Name	Set #	#Used	Type
1	1	1	STD3	-NA-	2	Standard 1-G1-1P
2	1	2	STD1-BLANK	-NA-	1	Standard
3	1	3	ICSA8	-NA-	3	QC Standard 1-G1-3P
4	1	4	ICV/CCV	-NA-	6	QC Standard 1-G1-2P
5	1	5	CHECK LO	-NA-	1	QC Standard
6	1	6	ICB/CC8	-NA-	6	QC Standard

(7...19 Not Used)

DKd 10/7/97

Rack #2

Pos	Row	Col	Sample Name	Set #	#Used	Type
1	1	1	185-4-1	1	-NA-	Sample
2	1	2	185-4-1 D	1	-NA-	Sample
3	1	3	43231 MB	2	-NA-	Sample
4	1	4	43231 LCS	2	-NA-	Sample
5	1	5	183-3-1B	2	-NA-	Sample
6	1	6	183-3-2B	2	-NA-	Sample
7	1	7	183-3-2B PDS	2	-NA-	Sample
8	1	8	183-3-2B L	2	-NA-	Sample
9	1	9	183-3-3B	2	-NA-	Sample
10	1	10	183-3-3B DA	2	-NA-	Sample
11	1	11	183-3-4B	2	-NA-	Sample
12	1	12	183-3-5B	2	-NA-	Sample
13	2	1	183-3-6B	2	-NA-	Sample
14	2	2	183-3-7B	2	-NA-	Sample

Rack #2

Pos	Row	Col	Sample Name	Set #	#Used	Type
15	2	3	183-3-8B	2	-NA-	Sample
16	2	4	183-3-1BC	2	-NA-	Sample
17	2	5	183-3-2C	2	-NA-	Sample
18	2	6	183-3-2C PDS	2	-NA-	Sample
19	2	7	183-3-2C L	2	-NA-	Sample
20	2	8	183-3-3C	2	-NA-	Sample
21	2	9	183-3-3C DA	2	-NA-	Sample
22	2	10	183-3-4C	2	-NA-	Sample
23	2	11	183-3-5BC	2	-NA-	Sample
24	2	12	183-3-6C	2	-NA-	Sample
25	3	1	183-3-7C	2	-NA-	Sample
26	3	2	183-3-8C	2	-NA-	Sample
27	3	3	43231 MB	2	-NA-	Sample
28	3	4	43231 LCS	2	-NA-	Sample
29	3	5	184-23-1AB X50	2	-NA-	Sample
30	3	6	184-23-2AB	2	-NA-	Sample
31	3	7	184-23-2AB PDS	2	-NA-	Sample
32	3	8	184-23-2AB L	2	-NA-	Sample
33	3	9	184-23-3AB	2	-NA-	Sample
34	3	10	184-23-3AB DA	2	-NA-	Sample
35	3	11	184-23-4AB	2	-NA-	Sample
36	3	12	184-23-6AB	2	-NA-	Sample
37	4	1	184-23-7AB	2	-NA-	Sample
38	4	2	184-23-8AB	2	-NA-	Sample
39	4	3	184-23-9AB	2	-NA-	Sample
40	4	4	184-23-10AB,5	2	-NA-	Sample
41	4	5	183-15-1C	2	-NA-	Sample
42	4	6	183-15-1BC	2	-NA-	Sample

(43...48 Not Used)

Rack #3

Pos	Row	Col	Sample Name	Set #	#Used	Type

(1...48 Not Used)

Rack #4

Pos	Row	Col	Sample Name	Set #	#Used	Type

(1...48 Not Used)

Rack #5

Pos	Row	Col	Sample Name	Set #	#Used	Type

(1...48 Not Used)

Method: TRIANGL2 Standard: STD1-BLANK

Elem	Ag3280	Al3082	As1890	B_2496	Ba4934	Be3130	Ca3179
Avge	-.0001	.0029	-.0003	.0387	.0006	.0002	.0005
SDev	.0002	.0000	.0001	.0010	.0000	.0000	.0000
%RSD	238.2	.9540	18.26	2.698	2.019	.8331	2.589
#1	.0001	.0029	-.0004	.0378	.0006	.0002	.0005
#2	-.0001	.0029	-.0003	.0398	.0006	.0002	.0005
#3	-.0002	.0029	-.0003	.0384	.0006	.0002	.0005

Elem	Cd2265	Ce4186	Co2286	Cr2677	Cu3247	Fe2714	K_7664
Avge	-.0001	-.0000	-.0001	-.0001	.0028	.0000	4.044
SDev	.0001	.0001	.0000	.0001	.0000	.0000	.029
%RSD	69.80	467.4	31.64	59.00	1.242	59.72	.7063
#1	-.0001	-.0002	-.0002	-.0002	.0028	.0000	4.011
#2	-.0000	-.0000	-.0001	-.0001	.0028	.0001	4.063
#3	-.0001	.0001	-.0001	-.0001	.0028	.0001	4.057

Elem	Li6707	Mg2790	Mn2576	Mo2020	Na3302	Ni2316	P_2149
Avge	.0748	.0001	.0000	.0000	.0025	-.0017	-.0010
SDev	.0005	.0001	.0000	.0000	.0019	.0002	.0000
%RSD	.6568	87.43	22.13	131.4	77.25	9.837	4.876
#1	.0743	.0000	.0000	.0000	.0040	-.0019	-.0010
#2	.0752	.0001	.0000	.0001	.0031	-.0017	-.0010
#3	.0750	.0001	.0000	.0000	.0003	-.0015	-.0009

Elem	2203-1	2203-2	Sb2068	1960-1	1960-2	Sn1899	Sr4215
Avge	.0008	.0002	.0003	-.0059	.0021	-.0004	.0003
SDev	.0003	.0001	.0001	.0011	.0001	.0000	.0000
%RSD	38.95	64.63	48.42	18.09	6.774	6.482	8.453
#1	.0012	.0001	.0003	-.0047	.0023	-.0004	.0003
#2	.0006	.0003	.0001	-.0068	.0021	-.0004	.0003
#3	.0006	.0002	.0004	-.0062	.0020	-.0005	.0003

Elem	Ti3349	Tl1908	V_2924	Zn2062	Si2881
Avge	.0001	-.0006	-.0005	-.0000	.0515
SDev	.0001	.0000	.0000	.0000	.0039
%RSD	115.6	6.633	3.104	143.6	7.564
#1	-.0000	-.0006	-.0005	-.0001	.0497
#2	.0001	-.0005	-.0004	.0000	.0559
#3	.0002	-.0006	-.0005	-.0000	.0487

Method: TRIANGL2 Standard: STD3

Elem	Ag3280	Al3082	As1890	B_2496	Ba4934	Be3130	Ca3179
Avge	.3982	.0180	.0517	.1964	.2895	.2558	.0223
SDev	.0019	.0003	.0000	.0009	.0002	.0009	.0001
%RSD	.4764	1.461	.0740	.4663	.0636	.3704	.2756
#1	.4003	.0183	.0517	.1974	.2897	.2548	.0222
#2	.3976	.0179	.0517	.1962	.2896	.2559	.0223
#3	.3967	.0178	.0518	.1956	.2894	.2567	.0223

Elem	Cd2265	Ce4186	Co2286	Cr2677	Cu3247	Fe2714	K_7664
Avge	.9160	.1104	.1037	.1453	.1778	.0041	23.31
SDev	.0033	.0002	.0003	.0005	.0012	.0000	.05
%RSD	.3602	.1649	.2513	.3350	.6508	.6543	.2268
#1	.9126	.1102	.1034	.1448	.1791	.0041	23.34
#2	.9162	.1106	.1037	.1453	.1775	.0041	23.34
#3	.9192	.1105	.1039	.1458	.1768	.0042	23.25

Elem	Li6707	Mg2790	Mn2576	Mo2020	Na3302	Ni2316	P_2149
Avge	15.96	.0200	.1273	.0774	.2309	.3443	.0215
SDev	.08	.0000	.0004	.0004	.0023	.0014	.0000
%RSD	.4845	.2240	.2832	.5870	1.015	.4059	.0620
#1	15.99	.0200	.1269	.0769	.2336	.3434	.0216
#2	16.03	.0200	.1274	.0775	.2300	.3437	.0216
#3	15.88	.0199	.1276	.0778	.2292	.3459	.0215

Elem	2203-1	2203-2	Sb2068	1960-1	1960-2	Sn1899	Sr4215
Avge	.1775	.0883	.1192	.2668	.1586	.0055	.8209
SDev	.0008	.0005	.0003	.0016	.0011	.0001	.0008
%RSD	.4299	.5841	.2448	.6023	.7097	1.018	.0980
#1	.1784	.0879	.1195	.2685	.1573	.0054	.8216
#2	.1770	.0881	.1189	.2667	.1594	.0055	.8209
#3	.1771	.0889	.1192	.2653	.1591	.0054	.8200

Elem	Ti3349	Tl1908	V_2924	Zn2062	Si2881
Avge	1.100	.0306	.0379	.0979	.4769
SDev	.002	.0010	.0001	.0005	.0026
%RSD	.1470	3.264	.1783	.4822	.5433
#1	1.098	.0295	.0379	.0975	.4798
#2	1.100	.0309	.0379	.0979	.4758
#3	1.101	.0314	.0380	.0985	.4750

Method: TRIANGL2 Sample Name: STD3 Operator: DKH
Run Time: 10/07/97 02:17 Filename: 100797
Mode: CONC Type: Q Corr. Factor: 1.00000
Lab ID.: Cust. Smpl. ID.: Cust. ID.: 43430

Elems	Ag3280	Al3082	As1890	B_2496	Ba4934	Be3130
Units	ppb	ppb	ppb	ppb	ppb	ppb
Avge	998.6	1000.	1004.	983.8	1004.	1004.
SDev	5.093	13.27	2.708	4.027	.7248	2.818
%RSD	.51	1.327	.2699	.4094	.0722	.2808

Elems	Ca3179	Cd2265	Ce4186	Co2286	Cr2677	Cu3247
Units	ppb	ppb	ppb	ppb	ppb	ppb
Avge	1005.	1007.	1007.	1006.	1006.	1002.
SDev	2.647	2.874	1.356	2.088	1.181	4.399
%RSD	.2633	.2856	.1346	.2076	.1174	.4389

Elems	Fe2714	K_7664	Li6707	Mg2790	Mn2576	Mo2020
Units	ppb	ppm	ppb	ppb	ppb	ppb
Avge	1007.	9.972	996.5	1003.	1005.	1011.
SDev	3.941	.0194	1.972	4.795	2.251	.7379
%RSD	.3916	.1945	.1979	.4782	.224	.073

Elems	Na3302	Ni2316	P_2149	2203-1	2203-2	Sb2068
Units	ppm	ppb	ppb	ppb	ppb	ppb
Avge	9.983	1006.	1004.	1000.	1008.	1007.
SDev	.0904	2.089	5.599	2.234	8.047	2.929
%RSD	.9058	.2078	.5577	.2233	.798	.2909

Elems	1960-1	1960-2	Pb2203	Se1960	Sn1899	Sr4215
Units	ppb	ppb	ppb	ppb	ppb	ppb
Avge	1005.	1006.	1006.	1005.	988.2	999.5
SDev	5.134	1.384	4.736	2.551	7.927	1.155
%RSD	.5109	.1377	.471	.2537	.8022	.1156

Elems	Ti3349	Tl1908	V_2924	Zn2062	Si2881
Units	ppb	ppb	ppb	ppb	ppb
Avge	1003.	1035.	1004.	1010.	9993.
SDev	1.978	10.62	1.491	6.095	53.58
%RSD	.1972	1.026	.1484	.6038	.5362

Method: TRIANGL2 Sample Name: ICV/CCV Operator: DKH
Run Time: 10/07/97 02:27 Filename: 100797
Mode: CONC Type: Q Corr. Factor: 1.00000
Lab ID.: Cust. Smpl. ID.: Cust. ID.: 43430

Elems	Ag3280	Al3082	As1890	B_2496	Ba4934	Be3130
Units	ppb	ppb	ppb	ppb	ppb	ppb
Avge	Q.9089	Q2.758	Q1.289	-86.48	Q.7875	Q.8180
SDev	.2582	3.023	2.213	1.231	.1798	.2313
%RSD	28.41	109.6	171.7	1.423	22.83	28.27

Elems	Ca3179	Cd2265	Ce4186	Co2286	Cr2677	Cu3247
Units	ppb	ppb	ppb	ppb	ppb	ppb
Avge	Q.7980	Q.8192	1.301	Q.9261	Q.7586	Q.4245
SDev	.2426	.1844	.8208	.2671	.0791	.4021
%RSD	30.4	22.51	63.07	28.84	10.43	94.73

Elems	Fe2714	K_7664	Li6707	Mg2790	Mn2576	Mo2020
Units	ppb	ppm	ppb	ppb	ppb	ppb
Avge	Q5.346	Q.0269	Q.8153	Q2.238	Q.8254	Q2.291
SDev	4.673	.0131	.1781	1.294	.214	.4794
%RSD	87.4	48.86	21.85	57.81	25.93	20.93

Elems	Na3302	Ni2316	P_2149	2203-1	2203-2	Sb2068
Units	ppm	ppb	ppb	ppb	ppb	ppb
Avge	Q.1012	Q.8937	Q2.009	.6948	-.8176	Q4.500
SDev	.015	.1957	1.555	1.936	1.748	1.519
%RSD	14.8	21.9	77.37	278.7	213.8	33.75

Elems	1960-1	1960-2	Pb2203	Se1960	Sn1899	Sr4215
Units	ppb	ppb	ppb	ppb	ppb	ppb
Avge	2.036	.4676	Q-.3140	Q.9899	Q12.36	Q.7994
SDev	1.709	.9612	1.748	1.088	14.35	.1952
%RSD	83.95	205.6	556.7	109.9	116.2	24.42

Elems	Ti3349	Tl1908	V_2924	Zn2062	*Si2881
Units	ppb	ppb	ppb	ppb	ppb
Avge	Q.8199	Q16.97	Q1.628	Q.7629	Q-262.4
SDev	.1822	6.494	.1576	.3169	4.032
%RSD	22.22	38.27	9.684	41.54	1.537

N/N. DKH 10/7/97

Method: TRIANGL2 Sample Name: ICV/CCV Operator: DKH
Run Time: 10/07/97 02:34 Filename: 100797
Mode: CONC Type: Q Corr. Factor: 1.00000
Lab ID.: Cust. Smpl. ID.: Cust. ID.: 43430

Elems	Ag3280	Al3082	As1890	B_2496	Ba4934	Be3130
Units	ppb	ppb	ppb	ppb	ppb	ppb
Avge	496.3	506.3	499.2	400.6	496.7	492.4
SDev	2.087	12.97	1.552	1.528	.763	2.514
%RSD	.4205	2.561	.3109	.3815	.1536	.5106

Elems	Ca3179	Cd2265	Ce4186	Co2286	Cr2677	Cu3247
Units	ppb	ppb	ppb	ppb	ppb	ppb
Avge	498.6	500.0	496.2	495.5	497.0	500.4
SDev	1.326	2.456	1.302	1.84	1.958	4.565
%RSD	.266	.4912	.2623	.3714	.3941	.9122

Elems	Fe2714	K_7664	Li6707	Mg2790	Mn2576	Mo2020
Units	ppb	ppm	ppb	ppb	ppb	ppb
Avge	491.0	4.882	485.4	498.6	497.0	498.3
SDev	6.234	.0418	4.274	4.04	1.61	.9754
%RSD	1.27	.856	.8806	.8103	.324	.1958

Elems	Na3302	Ni2316	P_2149	2203-1	2203-2	Sb2068
Units	ppm	ppb	ppb	ppb	ppb	ppb
Avge	4.913	498.1	496.3	497.1	499.0	494.7
SDev	.1562	1.359	1.814	2.469	1.107	2.296
%RSD	3.179	.2728	.3655	.4968	.2217	.464

Elems	1960-1	1960-2	Pb2203	Se1960	Sn1899	Sr4215
Units	ppb	ppb	ppb	ppb	ppb	ppb
Avge	502.1	501.2	498.4	501.5	Q9516.	494.4
SDev	4.361	3.123	.0888	3.126	40.35	.287
%RSD	.8685	.6231	.0178	.6233	.4241	.0581

Elems	Ti3349	Tl1908	V_2924	Zn2062	*Si2881
Units	ppb	ppb	ppb	ppb	ppb
Avge	496.1	505.6	497.1	498.8	Q-33.54
SDev	.8619	12.56	.992	3.135	8.421
%RSD	.1737	2.484	.1996	.6285	25.11

Method: TRIANGL2 Sample Name: ICB/CCB Operator: DKH
Run Time: 10/07/97 02:44 Filename: 100797
Mode: CONC Type: Q Corr. Factor: 1.00000
Lab ID.: _ Cust. Smpl. ID.: Cust. ID.: 43430

Elems	Ag3280	Al3082	As1890	B_2496	Ba4934	Be3130
Units	ppb	ppb	ppb	ppb	ppb	ppb
Avge	.3155	6.615	.0904	-128.7	.0616	.1053
SDev	.257	3.268	.4241	.7183	.0346	.034
%RSD	81.48	49.41	469.1	.5582	56.23	32.28

Elems	Ca3179	Cd2265	Ce4186	Co2286	Cr2677	Cu3247
Units	ppb	ppb	ppb	ppb	ppb	ppb
Avge	-.5314	.0224	.6182	.1822	.1414	-.5736
SDev	.8154	.1327	1.838	.1334	.2856	.4538
%RSD	153.4	591.6	297.3	73.23	201.9	79.12

Elems	Fe2714	K_7664	Li6707	Mg2790	Mn2576	Mo2020
Units	ppb	ppm	ppb	ppb	ppb	ppb
Avge	-.2569	.0065	.1007	.0826	.0901	.4445
SDev	3.027	.0102	.0087	1.801	.0456	.5671
%RSD	1178	156.5	8.674	2179	50.61	127.6

Elems	Na3302	Ni2316	P_2149	2203-1	2203-2	Sb2068
Units	ppm	ppb	ppb	ppb	ppb	ppb
Avge	.0681	.1093	3.447	.1017	-1.408	1.411
SDev	.0584	.095	1.654	.8925	.8182	1.881
%RSD	85.75	86.92	47.97	877.6	58.1	133.4

Elems	1960-1	1960-2	Pb2203	Se1960	Sn1899	Sr4215
Units	ppb	ppb	ppb	ppb	ppb	ppb
Avge	1.853	-2.055	-.9054	-.7540	-.3666	.0781
SDev	.6234	1.978	.8238	1.504	17.63	.0372
%RSD	33.65	96.21	90.99	199.5	4808	47.63

Elems	Ti3349	Tl1908	V_2924	Zn2062	Si2881
Units	ppb	ppb	ppb	ppb	ppb
Avge	.1101	3.916	.8993	.0529	Q-371.0
SDev	.0354	2.667	.1791	.3174	1.75
%RSD	32.15	68.12	19.91	600.1	.4718

Method: TRIANGL2 Sample Name: ICSAB Operator: DKH
Run Time: 10/07/97 02:49 Filename: 100797
Mode: CONC Type: Q Corr. Factor: 1.00000
Lab ID.: Cust. Smpl. ID.: Cust. ID.: 43430

Elems	Ag3280	Al3082	As1890	B_2496	Ba4934	Be3130
Units	ppb	ppb	ppb	ppb	ppb	ppb
Avge	534.1	497500.	519.1	402.2	515.1	485.7
SDev	1.677	4766	2.114	1.583	1.099	1.786
%RSD	.314	.9579	.4072	.3935	.2134	.3677

Elems	Ca3179	Cd2265	Ce4186	Co2286	Cr2677	Cu3247
Units	ppb	ppb	ppb	ppb	ppb	ppb
Avge	447300.	477.5	500.4	471.1	478.5	537.6
SDev	1055	1.155	.7313	1.108	2.127	4.405
%RSD	.2359	.2418	.1461	.2352	.4446	.8194

Elems	Fe2714	K_7664	Li6707	Mg2790	Mn2576	Mo2020
Units	ppb	ppm	ppb	ppb	ppb	ppb
Avge	172500.	Q25.18	622.1	525200.	459.1	498.4
SDev	191.8	.058	1.361	1135	1.384	2.587
%RSD	.1112	.2302	.2188	.2162	.3015	.5192

Elems	Na3302	Ni2316	P_2149	2203-1	2203-2	Sb2068
Units	ppm	ppb	ppb	ppb	ppb	ppb
Avge	5.430	459.3	546.1	501.7	480.0	508.0
SDev	.1276	.8184	3.243	2.574	8.179	6.555
%RSD	2.349	.1782	.5939	.5129	1.704	1.29

Elems	1960-1	1960-2	Pb2203	Se1960	Sn1899	Sr4215
Units	ppb	ppb	ppb	ppb	ppb	ppb
Avge	543.7	521.9	487.3	529.1	Q9884.	508.0
SDev	10.11	8.784	4.779	3.846	30.75	.4388
%RSD	1.859	1.683	.9808	.7269	.3111	.0864

Elems	Ti3349	Tl1908	V_2924	Zn2062	Si2881
Units	ppb	ppb	ppb	ppb	ppb
Avge	496.1	516.6	492.6	450.2	Q206.5
SDev	.7835	9.949	1.416	3.577	19.32
%RSD	.1579	1.926	.2875	.7946	9.354

Method: TRIANGL2 Sample Name: ICV/CCV Operator: DKH
Run Time: 10/07/97 03:54 Filename: 100797
Mode: CONC Type: Q Corr. Factor: 1.00000
Lab ID.: Cust. Smpl. ID.: Cust. ID.: 43430

Elems	Ag3280	Al3082	As1890	B_2496	Ba4934	Be3130
Units	ppb	ppb	ppb	ppb	ppb	ppb
Avge	497.8	523.1	503.0	313.3	495.3	491.4
SDev	3.045	10.84	2.449	1.095	.7605	2.016
%RSD	.6117	2.073	.4869	.3496	.1535	.4103

Elems	Ca3179	Cd2265	Ce4186	Co2286	Cr2677	Cu3247
Units	ppb	ppb	ppb	ppb	ppb	ppb
Avge	497.9	504.1	496.8	495.4	499.4	498.9
SDev	1.714	2.036	.5736	1.303	1.438	3.769
%RSD	.3442	.4039	.1155	.263	.2879	.7556

Elems	Fe2714	K_7664	Li6707	Mg2790	Mn2576	Mo2020
Units	ppb	ppm	ppb	ppb	ppb	ppb
Avge	496.1	4.879	480.5	500.3	497.4	496.7
SDev	3.232	.0395	3.567	1.462	1.525	2.627
%RSD	.6515	.8093	.7423	.2922	.3065	.5289

Elems	Na3302	Ni2316	P_2149	2203-1	2203-2	Sb2068
Units	ppm	ppb	ppb	ppb	ppb	ppb
Avge	4.890	503.5	507.9	491.5	504.8	492.7
SDev	.0603	1.796	4.647	3.873	2.595	1.115
%RSD	1.232	.3567	.915	.7879	.5141	.2263

Elems	1960-1	1960-2	Pb2203	Se1960	Sn1899	Sr4215
Units	ppb	ppb	ppb	ppb	ppb	ppb
Avge	502.6	507.0	500.4	505.5	Q9385.	494.2
SDev	3.822	.8046	.8995	.8226	22.85	.2477
%RSD	.7604	.1587	.1798	.1627	.2435	.0501

Elems	Ti3349	Tl1908	V_2924	Zn2062	Si2881
Units	ppb	ppb	ppb	ppb	ppb
Avge	497.9	499.4	498.2	500.4	Q-286.4
SDev	.8951	18.76	1.183	3.693	4.778
%RSD	.1798	3.756	.2375	.7379	1.668

Method: TRIANGL2 Sample Name: ICB/CCB Operator: DKH
Run Time: 10/07/97 04:13 Filename: 100797
Mode: CONC Type: Q Corr. Factor: 1.00000
Lab ID.: Cust. Smpl. ID.: - Cust. ID.: 43430

Elems	Ag3280	Al3082	As1890	B_2496	Ba4934	Be3130
Units	ppb	ppb	ppb	ppb	ppb	ppb
Avge	.0352	34.98	1.112	-205.8	.0150	.2246
SDev	.2306	4.163	1.38	.9488	.0392	.0015
%RSD	654.4	11.9	124.1	.461	261.8	.6705

Elems	Ca3179	Cd2265	Ce4186	Co2286	Cr2677	Cu3247
Units	ppb	ppb	ppb	ppb	ppb	ppb
Avge	-2.315	-.0260	-.7679	.0968	.1344	-1.206
SDev	.2333	.0367	.7765	.1405	.1896	.2589
%RSD	10.08	141.5	101.1	145	141	21.48

Elems	Fe2714	K_7664	Li6707	Mg2790	Mn2576	Mo2020
Units	ppb	ppm	ppb	ppb	ppb	ppb
Avge	.4665	.0302	.1273	.8170	.0424	.4842
SDev	1.432	.0086	.0378	1.029	.0302	.6619
%RSD	307	28.46	29.73	126	71.16	136.7

Elems	Na3302	Ni2316	P_2149	2203-1	2203-2	Sb2068
Units	ppm	ppb	ppb	ppb	ppb	ppb
Avge	.0136	.3371	6.309	1.923	-2.814	.0359
SDev	.0449	.3752	3.504	1.16	.251	1.256
%RSD	329.4	111.3	55.53	60.32	8.918	3499

Elems	1960-1	1960-2	Pb2203	Se1960	Sn1899	Sr4215
Units	ppb	ppb	ppb	ppb	ppb	ppb
Avge	2.538	-1.377	-1.237	-.0736	Q-14.66	.0274
SDev	1.019	2.188	.3044	1.425	4.4	.0273
%RSD	40.14	158.8	24.61	1936	30.01	99.87

Elems	Ti3349	Tl1908	V_2924	Zn2062	Si2881
Units	ppb	ppb	ppb	ppb	ppb
Avge	.0476	Q11.82	1.296	.5581	Q-625.3
SDev	.0625	3.268	.182	.3716	2.053
%RSD	131.2	27.63	14.05	66.59	.3284

N/V.
MCH 10/7/97

Method: TRIANGL2 Sample Name: ICB/CCB Operator: DKH
Run Time: 10/07/97 04:19 Filename: 100797
Mode: CONC Type: Q Corr. Factor: 1.00000
Lab ID.: Cust. Smpl. ID.: Cust. ID.: 43430

Elems	Ag3280	Al3082	As1890	B_2496	Ba4934	Be3130
Units	ppb	ppb	ppb	ppb	ppb	ppb
Avge	.1153	35.78	-.7492	-208.7	.0022	.1974
SDev	.3559	3.024	1.582	.9138	.0055	.0239
%RSD	308.6	8.452	211.1	.4379	248.6	12.09

Elems	Ca3179	Cd2265	Ce4186	Co2286	Cr2677	Cu3247
Units	ppb	ppb	ppb	ppb	ppb	ppb
Avge	-3.147	-.1175	-.4512	.0817	.1302	-1.267
SDev	.6507	.1615	.5508	.1559	.1114	.1472
%RSD	20.68	137.4	122.1	190.8	85.5	11.61

Elems	Fe2714	K_7664	Li6707	Mg2790	Mn2576	Mo2020
Units	ppb	ppm	ppb	ppb	ppb	ppb
Avge	2.283	.0175	.0839	2.520	.0309	.1208
SDev	.6559	.0108	.0215	.8062	.018	.3677
%RSD	28.72	61.5	25.66	32	58.21	304.4

Elems	Na3302	Ni2316	P_2149	2203-1	2203-2	Sb2068
Units	ppm	ppb	ppb	ppb	ppb	ppb
Avge	.0545	-.0893	6.483	1.209	-3.434	-.0020
SDev	.0629	.3276	3.62	1.094	.9822	1.274
%RSD	115.4	366.8	55.84	90.48	28.6	64910

Elems	1960-1	1960-2	Pb2203	Se1960	Sn1899	Sr4215
Units	ppb	ppb	ppb	ppb	ppb	ppb
Avge	2.892	-2.974	-1.888	-1.021	Q33.02	.0098
SDev	4.575	2.35	.5263	.0971	9.284	.0078
%RSD	158.2	79.02	27.88	9.513	28.11	79.78

Elems	Ti3349	Tl1908	V_2924	Zn2062	Si2881
Units	ppb	ppb	ppb	ppb	ppb
Avge	-.0190	Q5.048	1.557	.1679	Q-628.5
SDev	.066	2.915	.3821	.1562	.091
%RSD	348.2	57.75	24.54	93.01	.0145

NIV
DKH 10/7/97

Method: TRIANGL2 Sample Name: IC8/CC8 Operator: DKH
Run Time: 10/07/97 04:31 Filename: 100797
Mode: CONC Type: Q Corr. Factor: 1.00000
Lab ID.: Cust. Smpl. ID.: Cust. ID.: 43430

Elems	Ag3280	Al3082	As1890	B_2496	Ba4934	Be3130
Units	ppb	ppb	ppb	ppb	ppb	ppb
Avge	.1661	40.81	1.251	-211.7	-.0116	.2269
SDev	.1269	2.658	.9621	1.69	.0428	.016
%RSD	76.43	6.514	76.89	.7981	370.3	7.059

Elems	Ca3179	Cd2265	Ce4186	Co2286	Cr2677	Cu3247
Units	ppb	ppb	ppb	ppb	ppb	ppb
Avge	-4.096	-.0758	.1982	.0802	.1499	-1.328
SDev	.5473	.018	.5162	.3625	.3166	.129
%RSD	13.36	23.78	260.5	451.9	211.2	9.711

Elems	Fe2714	K_7664	Li6707	Mg2790	Mn2576	Mo2020
Units	ppb	ppm	ppb	ppb	ppb	ppb
Avge	3.309	.0201	.0755	.5514	.0024	-.5559
SDev	3.475	.012	.0337	3.487	.0446	.2651
%RSD	105	59.67	44.56	632.4	1849	47.68

Elems	Na3302	Ni2316	P_2149	2203-1	2203-2	Sb2068
Units	ppm	ppb	ppb	ppb	ppb	ppb
Avge	.0360	-.0023	3.424	.8929	-1.798	.3855
SDev	.1088	.6983	1.303	1.807	.9609	1.052
%RSD	302.3	29790	38.06	202.4	53.44	272.9

Elems	1960-1	1960-2	Pb2203	Se1960	Sn1899	Sr4215
Units	ppb	ppb	ppb	ppb	ppb	ppb
Avge	2.833	-.9544	-.9020	.3068	Q13.48	-.0077
SDev	1.608	1.044	.276	.9219	14.7	.0227
%RSD	56.76	109.4	30.6	300.5	109.1	294.2

Elems	Ti3349	Tl1908	V_2924	Zn2062	Si2881
Units	ppb	ppb	ppb	ppb	ppb
Avge	-.0126	3.302	1.671	.1510	Q-651.2
SDev	.061	2.898	.386	.3774	1.713
%RSD	482.6	87.78	23.09	249.9	.2631

Method: TRIANGL2 Sample Name: ICSAB Operator: DKH
Run Time: 10/07/97 04:37 Filename: 100797
Mode: CONC Type: Q Corr. Factor: 1.00000
Lab ID.: Cust. Smpl. ID.: Cust. ID.: 43430

Elems	Ag3280	Al3082	As1890	B_2496	Ba4934	Be3130
Units	ppb	ppb	ppb	ppb	ppb	ppb
Avge	531.9	501000.	522.8	324.4	518.5	482.5
SDev	1.237	3412	4.091	3.635	1.233	1.742
%RSD	.2325	.6809	.7826	1.121	.2378	.361

Elems	Ca3179	Cd2265	Ce4186	Co2286	Cr2677	Cu3247
Units	ppb	ppb	ppb	ppb	ppb	ppb
Avge	448500.	480.7	504.2	470.5	480.2	542.6
SDev	1338	1.042	1.044	1.251	2.242	3.815
%RSD	.2983	.2168	.2071	.2659	.467	.7031

Elems	Fe2714	K_7664	Li6707	Mg2790	Mn2576	Mo2020
Units	ppb	ppm	ppb	ppb	ppb	ppb
Avge	172700.	Q25.34	625.0	527500.	459.9	496.5
SDev	245.2	.1569	3.643	598.2	1.24	4.086
%RSD	.142	.6191	.5828	.1134	.2696	.8231

Elems	Na3302	Ni2316	P_2149	2203-1	2203-2	Sb2068
Units	ppm	ppb	ppb	ppb	ppb	ppb
Avge	5.589	462.5	545.5	491.5	486.6	510.1
SDev	.0987	1.248	12.9	5.484	5.071	3.386
%RSD	1.766	.2699	2.365	1.116	1.042	.6637

Elems	1960-1	1960-2	Pb2203	Se1960	Sn1899	Sr4215
Units	ppb	ppb	ppb	ppb	ppb	ppb
Avge	537.0	527.6	488.3	530.7	Q9712.	512.5
SDev	7.339	7.309	1.6	2.762	111.3	.9922
%RSD	1.367	1.385	.3277	.5203	1.146	.1936

Elems	Ti3349	Tl1908	V_2924	Zn2062	Si2881
Units	ppb	ppb	ppb	ppb	ppb
Avge	499.6	503.0	493.6	446.6	Q-63.97
SDev	.3489	23.13	1.132	3.533	5.421
%RSD	.0698	4.598	.2294	.7911	8.475

Method: TRIANGL2 Sample Name: 43231 MB Operator: DKH
Run Time: 10/07/97 05:09 Filename: 100797
Mode: CONC Type: S Corr. Factor: 1.00000
Lab ID.: Cust. Smpl. ID.: Cust. ID.: 43231

Elems	Co2286	As1890	Ba4934	Be3130	Cd2265	Ag3280
Units	ppb	ppb	ppb	ppb	ppb	ppb
Avge	L-.0840	L.2054	L.1336	L.3012	L-.1924	L.0129
SDev	.0786	1.789	.023	.0141	.036	.1976
%RSD	93.54	870.9	17.21	4.686	18.73	1535

Elems	Cr2677	Mn2576	Ni2316	P_2149	Pb2203	Sb2068
Units	ppb	ppb	ppb	ppb	ppb	ppb
Avge	L.2336	L.8014	L.7729	L3.209	L-.0667	L.4985
SDev	.2472	.057	.5292	1.384	.3606	.7593
%RSD	105.8	7.111	68.46	43.14	540.9	152.3

Elems	Se1960	Tl1908	Zn2062
Units	ppb	ppb	ppb
Avge	L.0967	L3.807	22.53
SDev	2.06	1.589	.2129
%RSD	2129	41.72	.9451

Method: TRIANGL2 Sample Name: 43231 LCS Operator: DKH
Run Time: 10/07/97 05:14 Filename: 100797
Mode: CONC Type: S Corr. Factor: 1.00000
Lab ID.: Cust. Smpl. ID.: Cust. ID.: 43231

Elems	Co2286	As1890	Ba4934	Be3130	Cd2265	Ag3280
Units	ppb	ppb	ppb	ppb	ppb	ppb
Avge	49.51	49.55	50.04	47.96	50.47	46.92
SDev	.4746	1.37	.0505	.0718	.2798	.4211
%RSD	.9586	2.766	.101	.1496	.5543	.8974

Elems	Cr2677	Mn2576	Ni2316	P_2149	Pb2203	Sb2068
Units	ppb	ppb	ppb	ppb	ppb	ppb
Avge	50.38	50.22	50.80	1027.	48.37	51.11
SDev	.5406	.1382	.9832	9.016	.2561	.9948
%RSD	1.073	.2751	1.936	.8777	.5295	1.947

Elems	Se1960	Tl1908	Zn2062
Units	ppb	ppb	ppb
Avge	48.89	54.98	202.1
SDev	.8738	.8596	.9752
%RSD	1.787	1.563	.4825

Method: TRIANGL2 Sample Name: 183-3-18 Operator: DKH
Run Time: 10/07/97 05:19 Filename: 100797
Mode: CONC Type: S Corr. Factor: 1.00000
Lab ID.: Cust. Smpl. ID.: Cust. ID.: 43231

Elems	Co2286	As1890	Ba4934	Be3130	Cd2265	Ag3280
Units	ppb	ppb	ppb	ppb	ppb	ppb
Avge	L-1.503	L2.984	4.282	L.2732	25.20	5.430
SDev	.2874	1.066	.0153	.0461	.185	.3719
%RSD	19.12	35.71	.3576	16.9	.7342	6.85

Elems	Cr2677	Mn2576	Ni2316	P_2149	Pb2203	Sb2068
Units	ppb	ppb	ppb	ppb	ppb	ppb
Avge	9.808	7.089	9.264	L19.49	134.9	6.088
SDev	.3586	.0144	.4954	4.19	1.735	1.037
%RSD	3.657	.2033	5.348	21.5	1.286	17.04

Elems	Se1960	Tl1908	Zn2062
Units	ppb	ppb	ppb
Avge	3.900	L-.5224	42.38
SDev	2.003	1.752	.3118
%RSD	51.35	335.5	.7356

Method: TRIANGL2 Sample Name: 183-3-2B Operator: DKH
Run Time: 10/07/97 05:23 Filename: 100797
Mode: CONC Type: S Corr. Factor: 1.00000
Lab ID.: Cust. Smpl. ID.: Cust. ID.: 43231

Elems	Co2286	As1890	Ba4934	Be3130	Cd2265	Ag3280
Units	ppb	ppb	ppb	ppb	ppb	ppb
Avge	L-1.725	7.435	51.46	L.3328	28.57	10.58
SDev	.43	1.497	.0976	.0402	.2591	.6289
%RSD	24.92	20.13	.1896	12.08	.9066	5.946

Elems	Cr2677	Mn2576	Ni2316	P_2149	Pb2203	Sb2068
Units	ppb	ppb	ppb	ppb	ppb	ppb
Avge	41.40	1584.	50.42	105.6	1914.	23.73
SDev	2.048	8.431	1.657	5.198	12.68	3.3
%RSD	4.946	.5321	3.287	4.924	.6625	13.9

Elems	Se1960	Tl1908	Zn2062
Units	ppb	ppb	ppb
Avge	8.559	L-2.244	11380.
SDev	1.332	2.784	110.3
%RSD	15.56	124.1	.9692

Method: TRIANGL2 Sample Name: 183-3-28 PDS Operator: DKH
Run Time: 10/07/97 05:28 Filename: 100797
Mode: CONC Type: S Corr. Factor: 1.00000
Lab ID.: Cust. Smpl. ID.: Cust. ID.: 43231

Elems	Co2286	As1890	Ba4934	Be3130	Cd2265	Ag3280
Units	ppb	ppb	ppb	ppb	ppb	ppb
Avge	46.53	52.32	100.9	45.60	77.08	56.28
SDev	.3865	1.785	.3536	.1294	.5125	.5567
%RSD	.8308	3.411	.3505	.2837	.6649	.9892

Elems	Cr2677	Mn2576	Ni2316	P_2149	Pb2203	Sb2068
Units	ppb	ppb	ppb	ppb	ppb	ppb
Avge	91.75	1619.	99.32	106.6	1945.	68.97
SDev	1.525	5.874	1.766	12.33	7.856	1.48
%RSD	1.662	.3628	1.778	11.56	.4039	2.145

Elems	Se1960	Tl1908	Zn2062
Units	ppb	ppb	ppb
Avge	53.34	46.28	11470.
SDev	.2419	2.999	98.47
%RSD	.4534	6.479	.8584

Method: TRIANGL2 Sample Name: 183-3-28 L Operator: DKH
Run Time: 10/07/97 05:33 Filename: 100797
Mode: CONC Type: S Corr. Factor: 1.00000
Lab ID.: Cust. Smpl. ID.: Cust. ID.: 43231

Elems	Co2286	As1890	Ba4934	Be3130	Cd2265	Ag3280
Units	ppb	ppb	ppb	ppb	ppb	ppb
Avge	L-1.100	L2.140	10.54	L.3221	5.654	2.246
SDev	.1214	1.787	.063	.0306	.161	.3491
%RSD	11.03	83.51	.598	9.491	2.846	15.54

Elems	Cr2677	Mn2576	Ni2316	P_2149	Pb2203	Sb2068
Units	ppb	ppb	ppb	ppb	ppb	ppb
Avge	12.65	327.6	12.88	31.59	402.2	8.209
SDev	.3954	.7695	.337	8.045	2.606	1.123
%RSD	3.127	.2349	2.616	25.47	.6479	13.68

Elems	Se1960	Tl1908	Zn2062
Units	ppb	ppb	ppb
Avge	3.531	L3.416	2410.
SDev	1.877	2.182	8.563
%RSD	53.16	63.87	.3556

Method: TRIANGL2 Sample Name: 183-3-3B Operator: DKH
Run Time: 10/07/97 05:37 Filename: 100797
Mode: CONC Type: S Corr. Factor: 1.00000
Lab ID.: Cust. Smpl. ID.: Cust. ID.: 43231

Elems	Co2286	As1890	Ba4934	Be3130	Cd2265	Ag3280
Units	ppb	ppb	ppb	ppb	ppb	ppb
Avge	5.101	29.56	272.5	1.477	298.9	50.48
SDev	.1027	1.621	.1511	.0157	.7584	.4574
%RSD	2.014	5.483	.0555	1.065	.2537	.9062

Elems	Cr2677	Mn2576	Ni2316	P_2149	Pb2203	Sb2068
Units	ppb	ppb	ppb	ppb	ppb	ppb
Avge	154.5	12560.	51.42	420.2	14900.	105.9
SDev	1.403	18.43	1.221	8.107	8.949	2.9
%RSD	.9083	.1468	2.375	1.929	.0601	2.739

Elems	Se1960	Tl1908	Zn2062
Units	ppb	ppb	ppb
Avge	18.81	14.67	H72520.
SDev	1.038	.9247	206.2
%RSD	5.516	6.302	.2843

Method: TRIANGL2 Sample Name: 183-3-3B DA Operator: DKH
Run Time: 10/07/97 05:42 Filename: 100797
Mode: CONC Type: S Corr. Factor: 1.00000
Lab ID.: Cust. Smpl. ID.: Cust. ID.: 43231

Elems	Co2286	As1890	Ba4934	Be3130	Cd2265	Ag3280
Units	ppb	ppb	ppb	ppb	ppb	ppb
Avge	4.991	33.61	273.6	1.475	298.8	50.49
SDev	.3913	2.12	.2217	.0297	1.402	.2812
%RSD	7.84	6.307	.081	2.015	.4691	.5569

Elems	Cr2677	Mn2576	Ni2316	P_2149	Pb2203	Sb2068
Units	ppb	ppb	ppb	ppb	ppb	ppb
Avge	155.2	12520.	52.03	425.2	14910.	106.9
SDev	1.801	56.51	.4253	2.365	58.42	1.539
%RSD	1.16	.4514	.8174	.5562	.3919	1.44

Elems	Se1960	Tl1908	Zn2062
Units	ppb	ppb	ppb
Avge	18.29	13.08	H71960.
SDev	1.818	3.168	469.5
%RSD	9.938	24.21	.6525

Method: TRIANGL2 Sample Name: 183-3-4B Operator: DKH
Run Time: 10/07/97 05:47 Filename: 100797
Mode: CONC Type: S Corr. Factor: 1.00000
Lab ID.: Cust. Smpl. ID.: Cust. ID.: 43231

Elems	Co2286	As1890	Ba4934	Be3130	Cd2265	Ag3280
Units	ppb	ppb	ppb	ppb	ppb	ppb
Avge	L-1.676	8.563	48.03	L.4056	25.08	7.181
SDev	.4468	1.731	.2026	.0434	.1776	.3424
%RSD	26.66	20.22	.4218	10.69	.7083	4.768

Elems	Cr2677	Mn2576	Ni2316	P_2149	Pb2203	Sb2068
Units	ppb	ppb	ppb	ppb	ppb	ppb
Avge	30.49	1505.	13.72	1565.	1491.	14.70
SDev	1.071	5.021	.9878	1.35	4.75	2.254
%RSD	3.514	.3338	7.201	.0863	.3186	15.33

Elems	Se1960	Tl1908	Zn2062
Units	ppb	ppb	ppb
Avge	8.715	L-1.443	8545.
SDev	1.429	4.736	72.11
%RSD	16.4	328.2	.8439

Method: TRIANGL2 Sample Name: 183-3-58 Operator: DKH
Run Time: 10/07/97 05:51 Filename: 100797
Mode: CONC Type: S Corr. Factor: 1.00000
Lab ID.: Cust. Smpl. ID.: Cust. ID.: 43231

Elems	Co2286	As1890	Ba4934	Be3130	Cd2265	Ag3280
Units	ppb	ppb	ppb	ppb	ppb	ppb
Avge	L-2.223	L4.119	2.195	L.2215	L-.1931	L.4694
SDev	.4794	1.927	.0116	.0272	.0138	.1325
%RSD	21.57	46.79	.53	12.29	7.125	28.24

Elems	Cr2677	Mn2576	Ni2316	P_2149	Pb2203	Sb2068
Units	ppb	ppb	ppb	ppb	ppb	ppb
Avge	10.44	11.41	6.462	L13.13	9.729	7.605
SDev	.9226	2.011	1.026	4.668	3.117	2.898
%RSD	8.84	17.63	15.87	35.57	32.04	38.11

Elems	Se1960	Tl1908	Zn2062
Units	ppb	ppb	ppb
Avge	6.198	L1.619	61.34
SDev	2.272	1.43	12.74
%RSD	36.65	88.36	20.78

Method: TRIANGL2 Sample Name: ICV/CCV Operator: DKH
Run Time: 10/07/97 05:57 Filename: 100797
Mode: CONC Type: Q Corr. Factor: 1.00000
Lab ID.: Cust. Smpl. ID.: Cust. ID.: 43231

Elems	Ag3280	Al3082	As1890	B_2496	Ba4934	Be3130
Units	ppb	ppb	ppb	ppb	ppb	ppb
Avge	500.1	549.8	503.0	1126.	499.6	488.5
SDev	1.768	11.63	2.658	289.1	.8604	2.648
%RSD	.3536	2.116	.5284	25.68	.1722	.542

Elems	Ca3179	Cd2265	Ce4186	Co2286	Cr2677	Cu3247
Units	ppb	ppb	ppb	ppb	ppb	ppb
Avge	496.2	506.5	502.0	491.1	508.3	499.3
SDev	1.349	2.453	.2835	1.704	3.19	3.39
%RSD	.2717	.4844	.0565	.3469	.6276	.679

Elems	Fe2714	K_7664	Li6707	Mg2790	Mn2576	Mo2020
Units	ppb	ppm	ppb	ppb	ppb	ppb
Avge	504.5	4.770	471.3	494.2	494.5	495.0
SDev	2.803	.0039	1.514	2.288	1.959	3.113
%RSD	.5557	.0827	.3212	.4629	.3962	.629

Elems	Na3302	Ni2316	P_2149	2203-1	2203-2	Sb2068
Units	ppm	ppb	ppb	ppb	ppb	ppb
Avge	4.790	508.6	506.4	477.5	500.5	497.9
SDev	.0763	1.098	4.205	13.53	5.416	2.355
%RSD	1.593	.2159	.8303	2.835	1.083	.4729

Elems	1960-1	1960-2	Pb2203	Se1960	Sn1899	Sr4215
Units	ppb	ppb	ppb	ppb	ppb	ppb
Avge	494.3	500.8	492.7	498.6	Q9060.	498.4
SDev	5.34	2.783	.8996	1.65	42.96	.4037
%RSD	1.08	.5556	.1826	.331	.4741	.081

Elems	Ti3349	Tl1908	V_2924	Zn2062	Si2881
Units	ppb	ppb	ppb	ppb	ppb
Avge	500.4	501.9	498.5	495.1	Q134400.
SDev	.8618	15.59	1.359	1.921	14970
%RSD	.1722	3.106	.2727	.3879	11.14

Method: TRIANGL2 Sample Name: ICB/CCB Operator: DKH
Run Time: 10/07/97 06:04 Filename: 100797
Mode: CONC Type: Q Corr. Factor: 1.00000
Lab ID.: Cust. Smpl. ID.: Cust. ID.: 43231

Elems	Ag3280	Al3082	As1890	B_2496	Ba4934	Be3130
Units	ppb	ppb	ppb	ppb	ppb	ppb
Avge	.5385	Q57.04	1.689	1103.	.2200	.5654
SDev	.2869	2.91	.6228	345.8	.1405	.1555
%RSD	53.28	5.101	36.87	31.34	63.87	27.49

Elems	Ca3179	Cd2265	Ce4186	Co2286	Cr2677	Cu3247
Units	ppb	ppb	ppb	ppb	ppb	ppb
Avge	-4.869	-.3955	-.7971	-.9458	Q5.127	Q-2.216
SDev	.1377	.0709	.4798	.3115	.6681	.4563
%RSD	2.828	17.94	60.19	32.93	13.03	20.59

Elems	Fe2714	K_7664	Li6707	Mg2790	Mn2576	Mo2020
Units	ppb	ppm	ppb	ppb	ppb	ppb
Avge	14.13	.0282	.3119	1.657	.1839	.6380
SDev	5.622	.0217	.092	1.616	.1417	.4317
%RSD	39.78	77.04	29.51	97.56	77.08	67.67

Elems	Na3302	Ni2316	P_2149	2203-1	2203-2	Sb2068
Units	ppm	ppb	ppb	ppb	ppb	ppb
Avge	.0078	Q3.218	5.152	4.831	-5.180	Q4.165
SDev	.0636	.587	3.26	8.018	3.177	1.559
%RSD	816.7	18.24	63.27	166	61.33	37.44

Elems	1960-1	1960-2	Pb2203	Se1960	Sn1899	Sr4215
Units	ppb	ppb	ppb	ppb	ppb	ppb
Avge	11.73	-.6711	-1.846	Q3.457	Q-105.1	.2275
SDev	1.825	1.678	.617	1.174	28.86	.135
%RSD	15.56	250.1	33.42	33.96	27.47	59.36

Elems	Ti3349	Tl1908	V_2924	Zn2062	Si2881
Units	ppb	ppb	ppb	ppb	ppb
Avge	.1627	3.969	Q2.349	1.139	Q93760.
SDev	.0682	2.724	.2512	.2836	11540
%RSD	41.92	68.62	10.7	24.89	12.3

N/V. DKH 10/7/97

Method: TRIANGL2 Sample Name: IC8/CC8 Operator: DKH
Run Time: 10/07/97 06:19 Filename: 100797
Mode: CONC Type: Q Corr. Factor: 1.00000
Lab ID.: Cust. Smpl. ID.: Cust. ID.: 43231

Elems	Ag3280	Al3082	As1890	B_2496	Ba4934	Be3130
Units	ppb	ppb	ppb	ppb	ppb	ppb
Avge	-.5317	-.5762	4.251	1531.	.0309	.0217
SDev	1.738	8.903	.9086	342.2	.0293	.0526
%RSD	326.9	1545	21.37	22.36	94.81	242.4

Elems	Ca3179	Cd2265	Ce4186	Co2286	Cr2677	Cu3247
Units	ppb	ppb	ppb	ppb	ppb	ppb
Avge	.5761	.7945	2.189	.2052	1.853	Q-2.841
SDev	.8656	.2941	1.289	.2702	.518	.6363
%RSD	150.2	37.01	58.91	131.6	27.96	22.4

Elems	Fe2714	K_7664	Li6707	Mg2790	Mn2576	Mo2020
Units	ppb	ppm	ppb	ppb	ppb	ppb
Avge	5.114	.0601	.1608	2.086	-.0044	.1754
SDev	2.113	.0243	.0506	2.249	.0257	.4376
%RSD	41.32	40.42	31.45	107.8	580.7	249.6

Elems	Na3302	Ni2316	P_2149	2203-1	2203-2	Sb2068
Units	ppm	ppb	ppb	ppb	ppb	ppb
Avge	-.2286	2.343	11.40	-.3249	1.999	1.678
SDev	.5526	.1125	3.328	3.728	3.531	.3552
%RSD	241.7	4.802	29.21	1148	176.7	21.17

Elems	1960-1	1960-2	Pb2203	Se1960	Sn1899	Sr4215
Units	ppb	ppb	ppb	ppb	ppb	ppb
Avge	4.529	.9683	1.225	2.154	Q-21.31	.0393
SDev	2.188	3.235	1.312	2.015	17.37	.0214
%RSD	48.31	334.1	107.1	93.56	81.52	54.56

Elems	Ti3349	Tl1908	V_2924	Zn2062	Si2881
Units	ppb	ppb	ppb	ppb	ppb
Avge	.1194	Q10.44	Q2.990	.6097	Q24780.
SDev	.1128	1.68	.698	.3819	9419
%RSD	94.47	16.09	23.34	62.65	38

Method: TRIANGL2 Sample Name: 183-3-6B Operator: DKH
Run Time: 10/07/97 06:24 Filename: 100797
Mode: CONC Type: S Corr. Factor: 1.00000
Lab ID.: Cust. Smpl. ID.: Cust. ID.: 43231

Elems	Co2286	As1890	Ba4934	Be3130	Cd2265	Ag3280
Units	ppb	ppb	ppb	ppb	ppb	ppb
Avge	L-1.806	L4.283	8.844	L.1416	16.44	L.8027
SDev	.3095	.36	.0277	.0244	.0362	.5466
%RSD	17.14	8.406	.3137	17.22	.2201	68.1

Elems	Cr2677	Mn2576	Ni2316	P_2149	Pb2203	Sb2068
Units	ppb	ppb	ppb	ppb	ppb	ppb
Avge	9.845	29.62	11.50	L25.81	241.7	L3.938
SDev	.7486	.0633	.16	2.254	1.067	1.543
%RSD	7.604	.2138	1.391	8.734	.4413	39.19

Elems	Se1960	Tl1908	Zn2062
Units	ppb	ppb	ppb
Avge	3.725	L.1661	92.84
SDev	1.836	.2842	.5221
%RSD	49.3	171.1	.5624

Method: TRIANGL2 Sample Name: 183-3-7B Operator: DKH
Run Time: 10/07/97 06:29 Filename: 100797
Mode: CONC Type: S Corr. Factor: 1.00000
Lab ID.: Cust. Smpl. ID.: Cust. ID.: 43231

Elems	Co2286	As1890	Ba4934	Be3130	Cd2265	Ag3280
Units	ppb	ppb	ppb	ppb	ppb	ppb
Avge	L-2.318	5.244	7.222	L.1385	19.51	L.6510
SDev	.2215	1.829	.0532	.0252	.0542	.3015
%RSD	9.553	34.88	.7369	18.16	.2777	46.31

Elems	Cr2677	Mn2576	Ni2316	P_2149	Pb2203	Sb2068
Units	ppb	ppb	ppb	ppb	ppb	ppb
Avge	10.33	56.90	12.71	30.66	167.8	4.323
SDev	.815	.3025	.6915	4.756	.525	1.924
%RSD	7.89	.5317	5.44	15.51	.3129	44.5

Elems	Se1960	Tl1908	Zn2062
Units	ppb	ppb	ppb
Avge	4.249	L1.378	155.9
SDev	1.721	.741	1.698
%RSD	40.51	53.77	1.09

Method: TRIANGL2 Sample Name: 183-3-88 Operator: DKH
Run Time: 10/07/97 06:34 Filename: 100797
Mode: CONC Type: S Corr. Factor: 1.00000
Lab ID.: Cust. Smpl. ID.: Cust. ID.: 43231

Elems	Co2286	As1890	Ba4934	Be3130	Cd2265	Ag3280
Units	ppb	ppb	ppb	ppb	ppb	ppb
Avge	L-3.729	5.202	12.50	L.1025	3.949	9.942
SDev	.3914	.2739	.1446	.0193	.1164	.1831
%RSD	10.5	5.265	1.157	18.84	2.948	1.842

Elems	Cr2677	Mn2576	Ni2316	P_2149	Pb2203	Sb2068
Units	ppb	ppb	ppb	ppb	ppb	ppb
Avge	20.67	170.9	12.18	L28.32	186.0	8.237
SDev	.5764	1.392	.2914	10.4	2.226	2.066
%RSD	2.789	.8148	2.393	36.71	1.196	25.08

Elems	Se1960	Tl1908	Zn2062
Units	ppb	ppb	ppb
Avge	8.440	L-1.782	1600.
SDev	.5147	.6325	22.71
%RSD	6.099	35.5	1.419

Method: TRIANGL2 Sample Name: 183-3-18C Operator: DKH
Run Time: 10/07/97 06:38 Filename: 100797
Mode: CONC Type: S Corr. Factor: 1.00000
Lab ID.: Cust. Smpl. ID.: Cust. ID.: 43231

Elems	Co2286	As1890	Ba4934	Be3130	Cd2265	Ag3280
Units	ppb	ppb	ppb	ppb	ppb	ppb
Avge	L-6.784	L-5.449	3.570	L.1541	40.73	4.852
SDev	1.356	3.78	.0803	.0252	1.03	.1807
%RSD	19.99	69.37	2.249	16.36	2.528	3.725

Elems	Cr2677	Mn2576	Ni2316	P_2149	Pb2203	Sb2068
Units	ppb	ppb	ppb	ppb	ppb	ppb
Avge	18.91	12.07	10.73	69.81	189.2	5.944
SDev	4.946	.1103	4.136	16.94	.1989	5.273
%RSD	26.16	.9141	38.53	24.27	.1051	88.7

Elems	Se1960	Tl1908	Zn2062
Units	ppb	ppb	ppb
Avge	10.08	L-11.90	168.3
SDev	3.405	2.278	3.07
%RSD	33.76	19.14	1.824

Method: TRIANGL2 Sample Name: 183-3-2C Operator: DKH
Run Time: 10/07/97 06:43 Filename: 100797
Mode: CONC Type: S Corr. Factor: 1.00000
Lab ID.: Cust. Smpl. ID.: Cust. ID.: 43231

Elems	Co2286	As1890	Ba4934	Be3130	Cd2265	Ag3280
Units	ppb	ppb	ppb	ppb	ppb	ppb
Avge	L-4.216	L-2.845	3.441	L.1431	3.120	1.084
SDev	.5978	1.803	.0877	.0226	.3987	.291
%RSD	14.18	63.37	2.548	15.81	12.78	26.83

Elems	Cr2677	Mn2576	Ni2316	P_2149	Pb2203	Sb2068
Units	ppb	ppb	ppb	ppb	ppb	ppb
Avge	18.73	9.917	5.882	110.7	24.72	5.600
SDev	1.465	.081	1.84	9.969	1.227	3.057
%RSD	7.822	.8172	31.29	9.003	4.964	54.59

Elems	Se1960	Tl1908	Zn2062
Units	ppb	ppb	ppb
Avge	15.14	L-9.613	151.2
SDev	2.63	3.033	2.213
%RSD	17.37	31.56	1.464

Method: TRIANGL2 Sample Name: 183-3-2C PDS Operator: DKH
Run Time: 10/07/97 06:48 Filename: 100797
Mode: CONC Type: S Corr. Factor: 1.00000
Lab ID.: Cust. Smpl. ID.: Cust. ID.: 43231

Elems	Co2286	As1890	Ba4934	Be3130	Cd2265	Ag3280
Units	ppb	ppb	ppb	ppb	ppb	ppb
Avge	45.78	42.67	52.75	46.90	52.22	46.67
SDev	.5609	1.859	.1318	.3142	.427	.2279
%RSD	1.225	4.357	.25	.6698	.8177	.4883

Elems	Cr2677	Mn2576	Ni2316	P_2149	Pb2203	Sb2068
Units	ppb	ppb	ppb	ppb	ppb	ppb
Avge	65.84	59.62	53.36	108.0	73.37	51.92
SDev	1.093	.2415	.3677	4.079	1.074	2.589
%RSD	1.66	.4051	.689	3.776	1.463	4.986

Elems	Se1960	Tl1908	Zn2062
Units	ppb	ppb	ppb
Avge	57.09	44.99	343.1
SDev	1.199	2.69	3.282
%RSD	2.101	5.979	.9565

Method: TRIANGL2 Sample Name: 183-3-2C L Operator: DKH
Run Time: 10/07/97 06:52 Filename: 100797
Mode: CONC Type: S Corr. Factor: 1.00000
Lab ID.: Cust. Smpl. ID.: Cust. ID.: 43231

Elems	Co2286	As1890	Ba4934	Be3130	Cd2265	Ag3280
Units	ppb	ppb	ppb	ppb	ppb	ppb
Avge	L-1.161	L-.4891	L.6851	L.2191	L.4233	L.1553
SDev	.3492	.848	.0436	.0352	.0472	.4149
%RSD	30.08	173.4	6.369	16.08	11.14	267.2

Elems	Cr2677	Mn2576	Ni2316	P_2149	Pb2203	Sb2068
Units	ppb	ppb	ppb	ppb	ppb	ppb
Avge	4.711	2.062	L1.933	30.07	4.713	L1.112
SDev	.4529	.022	.3797	4.359	1.025	.986
%RSD	9.613	1.067	19.64	14.5	21.76	88.64

Elems	Se1960	Tl1908	Zn2062
Units	ppb	ppb	ppb
Avge	3.517	L.1127	32.23
SDev	.9451	2.654	.2552
%RSD	26.87	2356	.7917

Method: TRIANGL2 Sample Name: 183-3-3C Operator: DKH
Run Time: 10/07/97 06:57 Filename: 100797
Mode: CONC Type: S Corr. Factor: 1.00000
Lab ID.: Cust. Smpl. ID.: Cust. ID.: 43231

Elems	Co2286	As1890	Ba4934	Be3130	Cd2265	Ag3280
Units	ppb	ppb	ppb	ppb	ppb	ppb
Avge	L-2.508	L-4.446	15.26	L.1054	1.109	1.419
SDev	.8657	2.354	.0256	.0473	.2281	.561
%RSD	34.51	52.95	.1676	44.9	20.56	39.53

Elems	Cr2677	Mn2576	Ni2316	P_2149	Pb2203	Sb2068
Units	ppb	ppb	ppb	ppb	ppb	ppb
Avge	18.80	78.28	3.754	121.7	95.22	L2.873
SDev	1.792	.4926	1.2	4.906	1.243	3.743
%RSD	9.535	.6293	31.98	4.03	1.305	130.3

Elems	Se1960	Tl1908	Zn2062
Units	ppb	ppb	ppb
Avge	6.414	L-6.124	459.4
SDev	.8551	2.299	5.811
%RSD	13.33	37.54	1.265

Method: TRIANGL2 Sample Name: 183-3-3C DA Operator: DKH
Run Time: 10/07/97 07:02 Filename: 100797
Mode: CONC Type: S Corr. Factor: 1.00000
Lab ID.: Cust. Smpl. ID.: Cust. ID.: 43231

Elems	Co2286	As1890	Ba4934	Be3130	Cd2265	Ag3280
Units	ppb	ppb	ppb	ppb	ppb	ppb
Avge	L-1.929	L-4.545	15.18	L.0945	1.225	1.515
SDev	.5267	.4272	.0288	.0361	.3143	.4331
%RSD	27.3	9.401	.1901	38.24	25.66	28.58

Elems	Cr2677	Mn2576	Ni2316	P_2149	Pb2203	Sb2068
Units	ppb	ppb	ppb	ppb	ppb	ppb
Avge	17.90	78.20	L2.658	129.4	96.23	L3.852
SDev	.847	.272	.695	3.099	1.145	.6
%RSD	4.733	.3478	26.14	2.394	1.19	15.57

Elems	Se1960	Tl1908	Zn2062
Units	ppb	ppb	ppb
Avge	5.137	L-7.383	459.2
SDev	.999	2.558	3.201
%RSD	19.45	32.44	.6971

Method: TRIANGL2 Sample Name: 183-3-4C Operator: DKH
Run Time: 10/07/97 07:06 Filename: 100797
Mode: CONC Type: S Corr. Factor: 1.00000
Lab ID.: Cust. Smpl. ID.: Cust. ID.: 43231

Elems	Co2286	As1890	Ba4934	Be3130	Cd2265	Ag3280
Units	ppb	ppb	ppb	ppb	ppb	ppb
Avge	L-2.251	L-2.307	7.222	L.2053	13.11	2.964
SDev	.5416	.263	.1023	.03	.169	.414
%RSD	24.06	11.4	1.417	14.63	1.289	13.97

Elems	Cr2677	Mn2576	Ni2316	P_2149	Pb2203	Sb2068
Units	ppb	ppb	ppb	ppb	ppb	ppb
Avge	13.07	640.4	L1.556	131.1	483.0	4.079
SDev	.8783	3.483	.4508	8.039	6.131	3.553
%RSD	6.72	.5439	28.97	6.131	1.269	87.1

Elems	Se1960	Tl1908	Zn2062
Units	ppb	ppb	ppb
Avge	4.593	L-4.718	2404.
SDev	1.21	3.003	27.57
%RSD	26.35	63.64	1.147

Method: TRIANGL2 Sample Name: ICV/CCV Operator: DKH
Run Time: 10/07/97 07:12 Filename: 100797
Mode: CONC Type: Q Corr. Factor: 1.00000
Lab ID.: Cust. Smpl. ID.: Cust. ID.: 43231

Elems	Ag3280	Al3082	As1890	B_2496	Ba4934	Be3130
Units	ppb	ppb	ppb	ppb	ppb	ppb
Avge	498.0	522.4	499.4	3099.	489.6	490.7
SDev	2.278	10.14	1.46	361.8	.6792	2.24
%RSD	.4574	1.942	.2923	11.67	.1387	.4565

Elems	Ca3179	Cd2265	Ce4186	Co2286	Cr2677	Cu3247
Units	ppb	ppb	ppb	ppb	ppb	ppb
Avge	500.5	499.5	493.0	493.8	500.1	492.5
SDev	1.068	1.732	3.176	1.317	1.846	3.788
%RSD	.2133	.3467	.6443	.2667	.369	.769

Elems	Fe2714	K_7664	Li6707	Mg2790	Mn2576	Mo2020
Units	ppb	ppm	ppb	ppb	ppb	ppb
Avge	492.0	4.736	464.2	497.2	496.0	493.6
SDev	11.67	.0482	5.36	2.444	1.269	1.95
%RSD	2.372	1.018	1.155	.4915	.2558	.3952

Elems	Na3302	Ni2316	P_2149	2203-1	2203-2	Sb2068
Units	ppm	ppb	ppb	ppb	ppb	ppb
Avge	4.711	498.4	501.6	488.5	500.1	488.7
SDev	.1239	1.254	3.926	1.726	4.658	1.181
%RSD	2.631	.2516	.7827	.3534	.9314	.2416

Elems	1960-1	1960-2	Pb2203	Se1960	Sn1899	Sr4215
Units	ppb	ppb	ppb	ppb	ppb	ppb
Avge	488.5	494.2	496.2	492.3	09392.	491.5
SDev	1.767	2.897	2.997	2.519	48.24	.1941
%RSD	.3618	.5861	.6039	.5115	.5136	.0395

Elems	Ti3349	Tl1908	V_2924	Zn2062	Si2881
Units	ppb	ppb	ppb	ppb	ppb
Avge	495.1	503.5	496.5	496.6	017090.
SDev	1.004	1.788	.9821	3.39	243.4
%RSD	.2027	.3552	.1978	.6826	1.424

Method: TRIANGL2 Sample Name: ICB/CCB Operator: DKH
Run Time: 10/07/97 07:17 Filename: 100797
Mode: CONC Type: Q Corr. Factor: 1.00000
Lab ID.: Cust. Smpl. ID.: Cust. ID.: 43231

Elems	Ag3280	Al3082	As1890	B_2496	Ba4934	Be3130
Units	ppb	ppb	ppb	ppb	ppb	ppb
Avge	.5632	36.66	1.069	2589.	.4298	.7008
SDev	.4598	4.451	1	228.7	.1381	.1876
%RSD	81.64	12.14	93.54	8.835	32.13	26.77

Elems	Ca3179	Cd2265	Ce4186	Co2286	Cr2677	Cu3247
Units	ppb	ppb	ppb	ppb	ppb	ppb
Avge	-2.486	.2293	-.0852	.1817	1.091	-.9285
SDev	.4173	.2363	.527	.0916	.0397	.3665
%RSD	16.79	103.1	618.3	50.41	3.641	39.47

Elems	Fe2714	K_7664	Li6707	Mg2790	Mn2576	Mo2020
Units	ppb	ppm	ppb	ppb	ppb	ppb
Avge	.8134	.0607	.5874	1.017	.5471	1.502
SDev	4.334	.0181	.1166	1.452	.146	.4715
%RSD	532.8	29.75	19.85	142.8	26.69	31.39

Elems	Na3302	Ni2316	P_2149	2203-1	2203-2	Sb2068
Units	ppm	ppb	ppb	ppb	ppb	ppb
Avge	.0185	.9271	6.954	1.120	-1.336	3.275
SDev	.0943	.4753	3.465	3.329	1.426	1.41
%RSD	510.3	51.27	49.83	297.3	106.8	43.06

Elems	1960-1	1960-2	Pb2203	Se1960	Sn1899	Sr4215
Units	ppb	ppb	ppb	ppb	ppb	ppb
Avge	4.275	-.4360	-.5180	1.133	918.73	.4860
SDev	.8584	1.606	.9348	.91	7.422	.1582
%RSD	20.08	368.4	180.5	80.34	39.62	32.55

Elems	Ti3349	Tl1908	V_2924	Zn2062	Si2881
Units	ppb	ppb	ppb	ppb	ppb
Avge	.4956	97.715	1.815	.7824	912830.
SDev	.1189	4.843	.1197	.0212	730.1
%RSD	24	62.78	6.593	2.713	5.692

Method: TRIANGL2 Sample Name: 183-3-5BC Operator: DKH
Run Time: 10/07/97 07:23 Filename: 100797
Mode: CONC Type: S Corr. Factor: 1.00000
Lab ID.: Cust. Smpl. ID.: Cust. ID.: 43231

Elems	Co2286	As1890	Ba4934	Be3130	Cd2265	Ag3280
Units	ppb	ppb	ppb	ppb	ppb	ppb
Avge	L-1.457	L-3.772	2.485	L.3041	1.687	L.8616
SDev	.4882	2.099	.0326	.1097	.2192	.5426
%RSD	33.51	55.64	1.314	36.06	13	62.97

Elems	Cr2677	Mn2576	Ni2316	P_2149	Pb2203	Sb2068
Units	ppb	ppb	ppb	ppb	ppb	ppb
Avge	5.442	9.504	L-.5751	44.23	20.34	L1.901
SDev	.5392	.031	.8034	6.102	.6077	1.328
%RSD	9.908	.3263	139.7	13.8	2.987	69.85

Elems	Se1960	Tl1908	Zn2062
Units	ppb	ppb	ppb
Avge	12.77	L-2.601	114.6
SDev	.7102	.5646	.9378
%RSD	5.559	21.7	.8183

NV AKH 10/7/97

Method: TRIANGL2 Sample Name: 183-3-6C Operator: DKH
Run Time: 10/07/97 07:27 Filename: 100797
Mode: CONC Type: S Corr. Factor: 1.00000
Lab ID.: Cust. Smpl. ID.: Cust. ID.: 43231

Elems	Co2286	As1890	Ba4934	Be3130	Cd2265	Ag3280
Units	ppb	ppb	ppb	ppb	ppb	ppb
Avge	L-1.526	L-3.844	3.043	L.2005	L.8888	L.8136
SDev	.4706	.889	.0476	.045	.1395	.4068
%RSD	30.84	23.12	1.566	22.45	15.7	50

Elems	Cr2677	Mn2576	Ni2316	P_2149	Pb2203	Sb2068
Units	ppb	ppb	ppb	ppb	ppb	ppb
Avge	8.543	7.011	L-.3612	91.00	15.54	L1.250
SDev	.4332	.0662	.5791	1.274	.8226	1.429
%RSD	5.071	.9436	160.3	1.401	5.294	114.3

Elems	Se1960	Tl1908	Zn2062
Units	ppb	ppb	ppb
Avge	3.292	L-2.546	114.7
SDev	1.635	.4472	.8733
%RSD	49.65	17.56	.7616

NJV
DKH 10/7/97

Method: TRIANGL2 Sample Name: 183-3-7C Operator: DKH
Run Time: 10/07/97 07:32 Filename: 100797
Mode: CONC Type: S Corr. Factor: 1.00000
Lab ID.: Cust. Smpl. ID.: Cust. ID.: 43231

Elems	Co2286	As1890	Ba4934	Be3130	Cd2265	Ag3280
Units	ppb	ppb	ppb	ppb	ppb	ppb
Avge	L-1.108	L-3.723	7.064	L.1714	L.7839	1.170
SDev	.506	1.631	.061	.0323	.318	.4752
%RSD	45.66	43.82	.8632	18.85	40.57	40.62

Elems	Cr2677	Mn2576	Ni2316	P 2149	Pb2203	Sb2068
Units	ppb	ppb	ppb	ppb	ppb	ppb
Avge	10.57	8.516	L.5801	113.3	21.08	L3.022
SDev	.6398	.1143	.7031	3.448	.7887	3.133
%RSD	6.054	1.342	121.2	3.044	3.74	103.7

Elems	Se1960	Tl1908	Zn2062
Units	ppb	ppb	ppb
Avge	14.37	L-4.576	150.6
SDev	.6082	.6368	1.639
%RSD	4.175	13.92	1.089

N/V. DKH 10/7/97

Method: TRIANGL2 Sample Name: 183-3-8C Operator: DKH
Run Time: 10/07/97 07:38 Filename: 100797
Mode: CONC Type: S Corr. Factor: 1.00000
Lab ID.: Cust. Smpl. ID.: Cust. ID.: 43231

Elems	Co2286	As1890	Ba4934	Be3130	Cd2265	Ag3280
Units	ppb	ppb	ppb	ppb	ppb	ppb
Avge	L-1.817	L-4.029	3.645	L.1906	L.5658	L.7658
SDev	.7066	1.642	.084	.039	.2079	.5403
%RSD	38.89	40.76	2.304	20.47	36.74	70.56

Elems	Cr2677	Mn2576	Ni2316	P 2149	Pb2203	Sb2068
Units	ppb	ppb	ppb	ppb	ppb	ppb
Avge	9.054	16.10	7.416	110.3	23.83	L1.887
SDev	.5541	.1184	.7708	1.194	1.196	1.519
%RSD	6.12	.7357	10.39	1.083	5.021	80.52

Elems	Se1960	Tl1908	Zn2062
Units	ppb	ppb	ppb
Avge	3.720	L-6.378	140.1
SDev	.196	.3194	2.001
%RSD	5.27	5.008	1.428

NIV. DKH 10/7/97

Method: TRIANGL2 Sample Name: 43231 MB Operator: DKH
Run Time: 10/07/97 07:42 Filename: 100797
Mode: CONC Type: S Corr. Factor: 1.00000
Lab ID.: Cust. Smpl. ID.: Cust. ID : 43231

Elems	Co2286	As1890	Ba4934	Be3130	Cd2265	Ag3280
Units	ppb	ppb	ppb	ppb	ppb	ppb
Avge	L-.7094	L-1.691	L.0213	L.2086	L-.3305	L.2580
SDev	.2122	.7641	.0729	.0078	.3004	.0152
%RSD	29.92	45.2	341.3	3.756	90.9	5.899

Elems	Cr2677	Mn2576	Ni2316	P_2149	Pb2203	Sb2068
Units	ppb	ppb	ppb	ppb	ppb	ppb
Avge	L.5464	2.345	L-1.278	L-9.033	2.021	L1.600
SDev	.27	.035	.3822	8.662	.8474	2.234
%RSD	49.42	1.23	29.9	95.89	41.94	139.7

Elems	Se1960	Tl1908	Zn2062
Units	ppb	ppb	ppb
Avge	L-.0651	L-1.414	10.08
SDev	1.103	3.087	.2555
%RSD	1693	218.3	2.535

N/V- MKH 10/7/97

Method: TRIANGL2 Sample Name: 43231 LCS Operator: DKH
Run Time: 10/07/97 07:47 Filename: 100797
Mode: CONC Type: S Corr. Factor: 1.00000
Lab ID.: Cust. Smpl. ID.: Cust. ID.: 43231

Elems	Co2286	As1890	Ba4934	Be3130	Cd2265	Ag3280
Units	ppb	ppb	ppb	ppb	ppb	ppb
Avge	46.18	44.02	46.31	44.62	46.76	43.15
SDev	.5436	.6175	.0547	.1791	.0803	.223
%RSD	1.177	1.403	.1181	.4014	.1717	.5168

Elems	Cr2677	Mn2576	Ni2316	P 2149	Pb2203	Sb2068
Units	ppb	ppb	ppb	ppb	ppb	ppb
Avge	47.61	47.38	44.90	903.1	45.86	46.84
SDev	.4845	.1828	.2643	5.482	.5191	1.144
%RSD	1.018	.3858	.5886	.6071	1.132	2.442

Elems	Se1960	Tl1908	Zn2062
Units	ppb	ppb	ppb
Avge	42.89	49.42	189.3
SDev	3.009	2.208	1.914
%RSD	7.017	4.467	1.011

DKH 10/7/97

Method: TRIANGL2 Sample Name: 184-23-1A8 Operator: DKH
Run Time: 10/07/97 07:52 Filename: 100797
Mode: CONC Type: S Corr. Factor: 1.00000
Lab ID.: Cust. Smpl. ID.: Cust. ID.: 43231

Elems	Co2286	As1890	Ba4934	Be3130	Cd2265	Ag3280
Units	ppb	ppb	ppb	ppb	ppb	ppb
Avge	220.5	1146.	12090.	7.474	9383.	104.3
SDev	3.464	7.119	23.41	.5287	14.54	2.228
%RSD	1.571	.6212	.1937	7.074	.1549	2.136

Elems	Cr2677	Mn2576	Ni2316	P_2149	Pb2203	Sb2068
Units	ppb	ppb	ppb	ppb	ppb	ppb
Avge	9376.	H119800.	1975.	14070.	H515300.	6628.
SDev	26.18	1600	.7151	18.81	3877	16.15
%RSD	.2792	1.336	.0362	.1337	.7524	.2437

Elems	Se1960	Tl1908	Zn2062
Units	ppb	ppb	ppb
Avge	458.9	365.8	H390100.
SDev	8.979	12.46	2398
%RSD	1.952	3.406	.6147

N/V DKH 10/7/97

Method: TRIANGL2 Sample Name: ICB/CCB Operator: DKH
Run Time: 10/07/97 10:36 Filename: 100797
Mode: CONC Type: Q Corr. Factor: 1.00000
Lab ID.: Cust. Smpl. ID.: Cust. ID.: 43231

Elems	Ag3280	Al3082	As1890	B_2496	Ba4934	Be3130
Units	ppb	ppb	ppb	ppb	ppb	ppb
Avge	-.0062	Q59.41	2.608	207.0	-.0188	.3490
SDev	.1122	1.81	2.386	4.213	.0483	.0086
%RSD	1811	3.047	91.49	2.036	256.2	2.47

Elems	Ca3179	Cd2265	Ce4186	Co2286	Cr2677	Cu3247
Units	ppb	ppb	ppb	ppb	ppb	ppb
Avge	-3.314	-.0176	-.6782	.5921	.1885	-.2727
SDev	.266	.1117	.1439	.1653	.1585	.1278
%RSD	8.028	633.6	21.22	27.91	84.08	46.85

Elems	Fe2714	K_7664	Li6707	Mg2790	Mn2576	Mo2020
Units	ppb	ppm	ppb	ppb	ppb	ppb
Avge	-3.106	.0537	.1566	-.1193	-.0542	-.6430
SDev	9.028	.0022	.0024	1.226	.0354	.0585
%RSD	290.6	4.07	1.547	1028	65.4	9.099

Elems	Na3302	Ni2316	P_2149	2203-1	2203-2	Sb2068
Units	ppm	ppb	ppb	ppb	ppb	ppb
Avge	.0409	2.079	Q34.09	-.2599	-3.118	.1324
SDev	.0453	.3544	1.708	1.345	.304	.9094
%RSD	110.9	17.05	5.011	517.6	9.75	686.8

Elems	1960-1	1960-2	Pb2203	Se1960	Sn1899	Sr4215
Units	ppb	ppb	ppb	ppb	ppb	ppb
Avge	10.15	-4.342	Q-2.166	.1517	Q81.00	.0087
SDev	2.002	.8932	.6433	.8731	7.693	.0125
%RSD	19.72	18.45	29.7	575.5	9.497	144

Elems	Ti3349	Tl1908	V_2924	Zn2062	Si2881
Units	ppb	ppb	ppb	ppb	ppb
Avge	-.0439	4.802	.4958	7.076	Q-575.7
SDev	.1148	.1333	.0568	.225	2.038
%RSD	261.4	2.775	11.46	3.18	.354

N/V. DKH 10/7/97

Method: TRIANGL2 Sample Name: ICV/CCV Operator: DKH
Run Time: 10/08/97 00:37 Filename: 100797
Mode: CONC Type: Q Corr. Factor: 1.00000
Lab ID.: Cust. Smpl. ID.: Cust. ID.: 43231

Elems	Ag3280	Al3082	As1890	B_2496	Ba4934	Be3130
Units	ppb	ppb	ppb	ppb	ppb	ppb
Avge	487.2	Q669.4	487.8	281.0	501.9	457.8
SDev	2.254	11.67	1.722	2.616	1.313	2.689
%RSD	.4628	1.743	.353	.9308	.2616	.5873

Elems	Ca3179	Cd2265	Ce4186	Co2286	Cr2677	Cu3247
Units	ppb	ppb	ppb	ppb	ppb	ppb
Avge	505.1	504.7	498.5	481.9	502.3	498.8
SDev	3.893	2.822	1.957	2.848	3.181	3.596
%RSD	.7706	.5592	.3925	.591	.6333	.721

Elems	Fe2714	K_7664	Li6707	Mg2790	Mn2576	Mo2020
Units	ppb	ppm	ppb	ppb	ppb	ppb
Avge	494.4	Q4.393	Q448.3	495.6	497.0	493.6
SDev	15.34	.0178	3.613	5.718	2.238	2.781
%RSD	3.103	.4048	.8058	1.154	.4502	.5634

Elems	Na3302	Ni2316	P_2149	2203-1	2203-2	Sb2068
Units	ppm	ppb	ppb	ppb	ppb	ppb
Avge	Q4.108	498.1	477.5	480.1	511.1	487.4
SDev	.0994	2.722	3.826	2.576	5.641	2.899
%RSD	2.42	.5465	.8013	.5366	1.104	.5949

Elems	1960-1	1960-2	Pb2203	Se1960	Sn1899	Sr4215
Units	ppb	ppb	ppb	ppb	ppb	ppb
Avge	445.1	480.7	500.7	468.9	Q9309.	516.2
SDev	1.342	4.53	3.405	2.6	68.76	1.045
%RSD	.3016	.9423	.6801	.5545	.7387	.2024

Elems	Ti3349	Tl1908	V_2924	Zn2062	Si2881
Units	ppb	ppb	ppb	ppb	ppb
Avge	515.2	499.0	485.8	472.4	Q-467.6
SDev	1.203	11.63	1.753	4.812	1.7
%RSD	.2334	2.332	.3609	1.019	.3635

Method: TRIANGL2 Sample Name: ICB/CCB Operator: DKH
un Time: 10/08/97 00:42 Filename: 100797
ode: CONC Type: Q Corr. Factor: 1.00000
Lab ID.: Cust. Smpl. ID.: Cust. ID.: 43231

Elems	Ag3280	Al3082	As1890	B_2496	Ba4934	Be3130
Units	ppb	ppb	ppb	ppb	ppb	ppb
vge	.3916	Q182.6	-1.629	-221.3	.4201	Q2.840
Dev	.2666	7.268	2.214	.3662	.0557	.0934
%RSD	68.08	3.979	136	.1655	13.27	3.289

lems	Ca3179	Cd2265	Ce4186	Co2286	Cr2677	Cu3247
Units	ppb	ppb	ppb	ppb	ppb	ppb
Avge	-7.189	.3826	.2814	-.0945	.5804	Q-3.335
Dev	.6779	.1892	.8087	.1859	.3297	.0785
%RSD	9.43	49.45	287.4	196.8	56.8	2.354

lems	Fe2714	K_7664	Li6707	Mg2790	Mn2576	Mo2020
nits	ppb	ppm	ppb	ppb	ppb	ppb
Avge	5.411	-.0233	.5986	1.866	.5211	1.531
Dev	2.229	.0145	.0413	.6428	.0456	.5562
RSD	41.2	62.28	6.903	34.45	8.742	36.47

lems	Na3302	Ni2316	P_2149	2203-1	2203-2	Sb2068
nits	ppm	ppb	ppb	ppb	ppb	ppb
Avge	-.0370	-.1446	-5.639	4.249	-1.148	3.183
SDev	.0605	.6003	1.584	1.159	1.027	2.248
RSD	163.8	415.3	28.08	27.29	89.52	70.64

Elems	1960-1	1960-2	Pb2203	Se1960	Sn1899	Sr4215
nits	ppb	ppb	ppb	ppb	ppb	ppb
vge	-6.508	3.181	.6493	-.0454	Q-27.57	.4776
SDev	.8738	1.012	.3022	.4245	34.92	.035
%RSD	13.43	31.83	46.55	934	126.7	7.337

elems	Ti3349	Tl1908	V_2924	Zn2062	Si2881
Units	ppb	ppb	ppb	ppb	ppb
vge	.4906	Q9.320	Q4.559	1.345	Q-768.3
Dev	.0553	4.261	.4512	.2023	1.751
%RSD	11.26	45.72	9.897	15.04	.228

Method: TRIANGL2 Sample Name: ICSAB Operator: DKH
Run Time: 10/08/97 00:47 Filename: 100797
Mode: CONC Type: Q Corr. Factor: 1.00000
Lab ID.: Cust. Smpl. ID.: Cust. ID.: 43231

Elems	Ag3280	Al3082	As1890	B_2496	Ba4934	Be3130
Units	ppb	ppb	ppb	ppb	ppb	ppb
Avge	528.1	497300.	515.6	313.4	524.2	458.3
SDev	1.92	3913	2.538	.6637	1.87	1.521
%RSD	.3636	.7868	.4922	.2118	.3568	.3319

Elems	Ca3179	Cd2265	Ce4186	Co2286	Cr2677	Cu3247
Units	ppb	ppb	ppb	ppb	ppb	ppb
Avge	462200.	482.4	505.6	461.2	486.7	540.7
SDev	944.6	.8757	1.849	.978	1.406	3.726
%RSD	.2044	.1815	.3658	.2121	.2888	.6891

Elems	Fe2714	K_7664	Li6707	Mg2790	Mn2576	Mo2020
Units	ppb	ppm	ppb	ppb	ppb	ppb
Avge	175500.	Q23.40	588.0	527200.	463.7	498.2
SDev	208.4	.0206	1.016	761.9	1.351	2.742
%RSD	.1188	.088	.1728	.1445	.2913	.5504

Elems	Na3302	Ni2316	P_2149	2203-1	2203-2	Sb2068
Units	ppm	ppb	ppb	ppb	ppb	ppb
Avge	4.689	461.5	499.3	498.8	487.6	510.8
SDev	.066	1.79	7.667	5.345	6.914	4.908
%RSD	1.407	.3879	1.536	1.072	1.418	.9609

Elems	1960-1	1960-2	Pb2203	Se1960	Sn1899	Sr4215
Units	ppb	ppb	ppb	ppb	ppb	ppb
Avge	495.8	509.0	491.3	504.6	Q9775.	531.1
SDev	5.425	4.82	2.908	1.604	54.97	1.389
%RSD	1.094	.947	.5919	.3178	.5624	.2615

Elems	Ti3349	Tl1908	V_2924	Zn2062	Si2881
Units	ppb	ppb	ppb	ppb	ppb
Avge	516.2	516.0	485.0	428.6	Q-172.7
SDev	.5002	16.55	1.39	3.987	4.416
%RSD	.0969	3.207	.2866	.9303	2.557

AutoSampler Report Table: HA452 Wed 10-08-97 02:10:19 AM page 1

DKA
10/8/97

Table Name: HA452 Autosampler Type: TYPE TJA
Sample Positions: 170/192 QC Positions: 13/19 # Sets: 1
Rinse Station location is rack -1, pos. -1.

--- Racks ---

Rack #	Type	Usage	#Pos Left	Analyses/Pos
1	Aux. (L) Rack	STD/QC/BLANK	13	10
2	Sample (16mm)	Samples	26	1
3	Sample (16mm)	Samples	48	1
4	Sample (16mm)	Samples	48	1
5	Sample (16mm)	Samples	48	1

--- Sample Sets ---

Set#	Type	Prepare?	Description	Method	#Pos	Rack#	StartPos
1	Normal	No	43231	TRIANGL2	22	2	1

43231 → See Table HA451 (previous day) for the rest of this project
DKA 10/8/97

--- Preparation Info ---

Set#	Uptake	Uptake#2	Final	Dil.Factor

No Samples Prepared.

Rack #1

Pos	Row	Col	Sample Name	Set #	#Used	Type
1	1	1	STD3	-NA-	2	Standard 1-61-1 P
2	1	2	STD1-BLANK	-NA-	1	Standard
3	1	3	ICSAB	-NA-	2	QC Standard 1-61-3P
4	1	4	CHECK LO	-NA-	1	QC Standard
5	1	5	ICV/CCV	-NA-	4	QC Standard 1-61-2 P
6	1	6	ICB/CCB	-NA-	4	QC Standard

(7...19 Not Used)

DKA
10/8/97

Rack #2

Pos	Row	Col	Sample Name	Set #	#Used	Type
1	1	1	183-3-3B X50	1	-NA-	Sample
2	1	2	183-3-3B X50 DA	1	-NA-	Sample
3	1	3	183-3-5BC	1	-NA-	Sample
4	1	4	183-3-6C	1	-NA-	Sample
5	1	5	183-3-7C	1	-NA-	Sample
6	1	6	183-3-8C	1	-NA-	Sample
7	1	7	43231 MB	1	-NA-	Sample
8	1	8	43231 LCS	1	-NA-	Sample
9	1	9	184-23-1AB X50	1	-NA-	Sample
10	1	10	184-23-2AB X50	1	-NA-	Sample
11	1	11	184-23-2AB X50 L	1	-NA-	Sample
12	1	12	184-23-3AB X50	1	-NA-	Sample
13	2	1	184-23-3AB X50 DA	1	-NA-	Sample
14	2	2	184-23-4AB X50	1	-NA-	Sample
15	2	3	184-23-6AB X50	1	-NA-	Sample

Rack #2

Pos	Row	Col	Sample Name	Set #	#Used	Type
16	2	4	184-23-7AB X50	1	-NA-	Sample
17	2	5	184-23-8AB X50	1	-NA-	Sample
18	2	6	184-23-9AB X50	1	-NA-	Sample
19	2	7	184-23-10AB,5 X50	1	-NA-	Sample
20	2	8	183-15-1C	1	-NA-	Sample
21	2	9	183-15-18~~C~~D 04-10-27-97 cl	1	-NA-	Sample
22	2	10	(empty)	1	-NA-	-NA-

(23...48 Not Used)

Rack #3

Pos	Row	Col	Sample Name	Set #	#Used	Type

(1...48 Not Used)

Rack #4

Pos	Row	Col	Sample Name	Set #	#Used	Type

(1...48 Not Used)

Rack #5

Pos	Row	Col	Sample Name	Set #	#Used	Type

(1...48 Not Used)

Method: TRIANGL2 Sample Name: STD1-BLANK Operator:
Run Time: 10/08/97 02:11 Filename: 100797
Mode: IR Type: X Corr. Factor: 1.00000
Lab ID.: Cust. Smpl. ID.: Cust. ID.:

Elems	Ag3280	Al3082	As1890	B_2496	Ba4934	Be3130
Units	count	count	count	count	count	count
Avge	0	.00575	-.0004	.0037	.00062	.00085
SDev	.00011	.00009	.00006	.00018	.00001	.00002
%RSD	18087.5	1.71474	15.4235	5.05971	1.86892	2.9699

Elems	Ca3179	Cd2265	Ce4186	Co2286	Cr2677	Cu3247
Units	count	count	count	count	count	count
Avge	.00033	-.00009	-.00005	-.00016	-.0001	.00229
SDev	.00001	.00019	.00009	.00003	.00005	.00004
%RSD	5.19045	209.65	184.618	22.4583	50.3011	1.84165

Elems	Fe2714	K_7664	Li6707	Mg2790	Mn2576	Mo2020
Units	count	count	count	count	count	count
Avge	.00005	3.89015	.07635	.00013	.00003	.00006
SDev	.00003	.02683	.00034	.0001	0	.00004
%RSD	57.6222	.6897	.44804	77.3615	11.5067	74.4291

Elems	Na3302	Ni2316	P_2149	2203-1	2203-2	Sb2068
Units	count	count	count	count	count	count
Avge	.00104	-.00168	-.00093	.00173	.00004	.00073
SDev	.00226	.00018	.00003	.00048	.00016	.00022
%RSD	216.865	10.7239	3.77577	28.1234	384.12	30.9777

Elems	1960-1	1960-2	Sn1899	Sr4215	Ti3349	Tl1908
Units	count	count	count	count	count	count
Avge	-.00648	.00232	-.0004	.00033	.00016	-.00034
SDev	.00038	.00034	.00013	.00001	.00011	.00007
%RSD	5.86225	14.9219	33.245	5.3312	72.6622	22.7504

Elems	V_2924	Zn2062	Si2881
Units	count	count	count
Avge	-.00032	.00008	.01863
SDev	.00002	.00003	.00002
%RSD	7.08465	42.1786	.15691

Method: TRIANGL2 Sample Name: STD3 Operator:
Run Time: 10/08/97 02:16 Filename: 100797
Mode: IR Type: X Corr. Factor: 1.00000
Lab ID.: Cust. Smpl. ID.: Cust. ID.:

Elems	Ag3280	Al3082	As1890	B_2496	Ba4934	Be3130
Units	count	count	count	count	count	count
Avge	.38497	.02043	.05097	.16505	.28937	.23431
SDev	.0015	.00034	.00013	.00019	.00036	.00102
%RSD	.39163	1.67379	.26263	.11973	.12707	.43841

Elems	Ca3179	Cd2265	Ce4186	Co2286	Cr2677	Cu3247
Units	count	count	count	count	count	count
Avge	.02224	.92028	.11079	.10035	.14505	.17642
SDev	.00008	.00407	.00011	.00035	.00044	.00115
%RSD	.36079	.44328	.10096	.34883	.30798	.65246

Elems	Fe2714	K_7664	Li6707	Mg2790	Mn2576	Mo2020
Units	count	count	count	count	count	count
Avge	.00408	21.8268	14.981	.01976	.12633	.07576
SDev	.00002	.02927	.03249	.00001	.00044	.0004
%RSD	.72347	.13412	.2169	.08686	.35048	.53452

Elems	Na3302	Ni2316	P_2149	2203-1	2203-2	Sb2068
Units	count	count	count	count	count	count
Avge	.19977	.3416	.02126	.16974	.08997	.11321
SDev	.00347	.00095	.0002	.00103	.00037	.00035
%RSD	1.74049	.27985	.96336	.6079	.4169	.31007

Elems	1960-1	1960-2	Sn1899	Sr4215	Ti3349	Tl1908
Units	count	count	count	count	count	count
Avge	.24882	.15605	.10968	.83545	1.11886	.03102
SDev	.00183	.00038	.00038	.00054	.00186	.00081
%RSD	.73765	.24925	.35468	.06528	.16681	2.62214

Elems	V_2924	Zn2062	Si2881	Pb2203	Se1960
Units	count	count	count		
Avge	.03661	.09328	.46311		
SDev	.00009	.00065	.0027		
%RSD	.24992	.69981	.58429		

Method: TRIANGL2 Sample Name: STD3 Operator: DKH
Run Time: 10/08/97 02:21 Filename: 100797
Mode: CONC Type: Q Corr. Factor: 1.00000
Lab ID.: Cust. Smpl. ID.: Cust. ID.: 43231

Elems	Ag3280	Al3082	As1890	B_2496	Ba4934	Be3130
Units	ppb	ppb	ppb	ppb	ppb	ppb
Avge	999.7	993.9	1000.	1002.	1002.	1003.
SDev	3.694	22.08	1.654	2.889	1.711	5.617
%RSD	.3695	2.221	.1653	.2885	.1708	.5601

Elems	Ca3179	Cd2265	Ce4186	Co2286	Cr2677	Cu3247
Units	ppb	ppb	ppb	ppb	ppb	ppb
Avge	1003.	1003.	1003.	1006.	1003.	999.9
SDev	4.529	3.344	1.126	4.499	4.471	6.198
%RSD	.4516	.3335	.1123	.4474	.4459	.6199

Elems	Fe2714	K_7664	Li6707	Mg2790	Mn2576	Mo2020
Units	ppb	ppm	ppb	ppb	ppb	ppb
Avge	997.5	9.993	998.7	1001.	1003.	1007.
SDev	10.97	.0422	5.033	2.48	3.55	3.101
%RSD	1.1	.4221	.5039	.2478	.3541	.308

Elems	Na3302	Ni2316	P_2149	2203-1	2203-2	Sb2068
Units	ppm	ppb	ppb	ppb	ppb	ppb
Avge	9.832	1003.	1009.	1004.	999.0	1010.
SDev	.1523	2.648	9.913	1.374	8.544	3.96
%RSD	1.549	.264	.9826	.1369	.8553	.3922

Elems	1960-1	1960-2	Sn1899	Sr4215	Ti3349	Tl1908
Units	ppb	ppb	ppb	ppb	ppb	ppb
Avge	1006.	1006.	1003.	999.2	1001.	1022.
SDev	3.246	3.149	2.994	.7262	1.892	9.04
%RSD	.3227	.313	.2985	.0727	.1891	.8842

Elems	V_2924	Zn2062	Si2881	Pb2203	Se1960
Units	ppb	ppb	ppb	ppb	ppb
Avge	1003.	1007.	10010.	1001.	1006.
SDev	3.042	7.998	56.74	5.384	1.368
%RSD	.3034	.7942	.5668	.5381	.136

Method: TRIANGL2 Sample Name: ICV/CCV Operator: DKH
Run Time: 10/08/97 02:30 Filename: 100797
Mode: CONC Type: Q Corr. Factor: 1.00000
Lab ID.: Cust. Smpl. ID.: Cust. ID.: 43231

Elems	Ag3280	Al3082	As1890	B_2496	Ba4934	Be3130
Units	ppb	ppb	ppb	ppb	ppb	ppb
Avge	506.6	486.5	510.4	500.3	503.2	506.9
SDev	2.069	14.52	3.431	.4603	1.02	2.192
%RSD	.4084	2.985	.6722	.092	.2027	.4324

Elems	Ca3179	Cd2265	Ce4186	Co2286	Cr2677	Cu3247
Units	ppb	ppb	ppb	ppb	ppb	ppb
Avge	509.4	506.5	501.5	506.8	504.7	505.9
SDev	1.249	1.425	2.827	1.968	2.504	3.263
%RSD	.2451	.2814	.5637	.3884	.4961	.6449

Elems	Fe2714	K_7664	Li6707	Mg2790	Mn2576	Mo2020
Units	ppb	ppm	ppb	ppb	ppb	ppb
Avge	499.8	4.906	487.2	504.8	504.7	505.8
SDev	5.532	.0102	2.955	1.273	1.411	1.662
%RSD	1.107	.2079	.6065	.2521	.2796	.3286

Elems	Na3302	Ni2316	P_2149	2203-1	2203-2	Sb2068
Units	ppm	ppb	ppb	ppb	ppb	ppb
Avge	4.978	504.9	510.7	505.2	505.4	525.7
SDev	.0322	1.326	2.84	2.572	2.418	3.273
%RSD	.6475	.2626	.5561	.509	.4785	.6226

Elems	1960-1	1960-2	Pb2203	Se1960	Sn1899	Sr4215
Units	ppb	ppb	ppb	ppb	ppb	ppb
Avge	513.1	513.0	505.3	513.0	506.3	502.4
SDev	1.586	2.484	.7743	2.144	1.696	.6403
%RSD	.3091	.4843	.1532	.4179	.3349	.1274

Elems	Ti3349	Tl1908	V_2924	Zn2062	Si2881
Units	ppb	ppb	ppb	ppb	ppb
Avge	503.1	509.9	506.1	508.5	Q285.1
SDev	.819	9.537	1.137	3.839	1.762
%RSD	.1628	1.87	.2245	.7549	.6179

Method: TRIANGL2 Sample Name: ICB/CCB Operator: DKH
Run Time: 10/08/97 02:36 Filename: 100797
Mode: CONC Type: Q Corr. Factor: 1.00000
Lab ID.: Cust. Smpl. ID.: Cust. ID.: 43231

Elems	Ag3280	Al3082	As1890	B_2496	Ba4934	Be3130
Units	ppb	ppb	ppb	ppb	ppb	ppb
Avge	.5272	-19.13	1.761	.0299	.3951	.1292
SDev	.5009	8.006	.2552	.4995	.1296	.1933
%RSD	95	41.86	14.49	1673	32.8	149.5

Elems	Ca3179	Cd2265	Ce4186	Co2286	Cr2677	Cu3247
Units	ppb	ppb	ppb	ppb	ppb	ppb
Avge	1.373	.4632	1.727	.6189	.4277	.3246
SDev	.426	.1585	.8644	.1793	.3855	.3636
%RSD	31.03	34.23	50.06	28.97	90.14	112

Elems	Fe2714	K_7664	Li6707	Mg2790	Mn2576	Mo2020
Units	ppb	ppm	ppb	ppb	ppb	ppb
Avge	-2.411	.0333	.4562	-1.801	.3929	.8313
SDev	9.886	.0201	.0671	2.625	.0796	.227
%RSD	410.1	60.48	14.72	145.7	20.27	27.3

Elems	Na3302	Ni2316	P_2149	2203-1	2203-2	Sb2068
Units	ppm	ppb	ppb	ppb	ppb	ppb
Avge	.0391	.8217	2.982	-3.283	.1296	.8309
SDev	.1478	.5218	1.86	2.134	2.242	1.405
%RSD	377.6	63.5	62.36	65	1730	169.1

Elems	1960-1	1960-2	Pb2203	Se1960	Sn1899	Sr4215
Units	ppb	ppb	ppb	ppb	ppb	ppb
Avge	1.869	-3.037	-1.007	-1.403	.5508	.4123
SDev	1.721	.3126	.8433	.478	.7697	.1
%RSD	92.09	10.29	83.75	34.07	139.8	24.25

Elems	Ti3349	Tl1908	V_2924	Zn2062	Si2881
Units	ppb	ppb	ppb	ppb	ppb
Avge	.4260	2.965	.4220	-.5546	.8372
SDev	.0588	3.467	.1185	.1114	1.813
%RSD	13.79	116.9	28.08	20.09	216.6

Method: TRIANGL2 Sample Name: ICSAB Operator: DKH
Run Time: 10/08/97 02:41 Filename: 100797
Mode: CONC Type: Q Corr. Factor: 1.00000
Lab ID.: Cust. Smpl. ID.: Cust. ID.: 43231

Elems	Ag3280	Al3082	As1890	B_2496	Ba4934	Be3130
Units	ppb	ppb	ppb	ppb	ppb	ppb
Avge	541.8	509500.	531.8	526.6	519.8	501.4
SDev	1.609	4246	3.326	1.098	1.855	2.35
%RSD	.297	.8334	.6254	.2085	.3569	.4686

Elems	Ca3179	Cd2265	Ce4186	Co2286	Cr2677	Cu3247
Units	ppb	ppb	ppb	ppb	ppb	ppb
Avge	454100.	477.5	502.3	479.3	484.2	541.8
SDev	2209	2.125	2.045	1.418	2.484	4.08
%RSD	.4865	.4451	.4072	.2959	.513	.7532

Elems	Fe2714	K_7664	Li6707	Mg2790	Mn2576	Mo2020
Units	ppb	ppm	ppb	ppb	ppb	ppb
Avge	177600.	Q25.60	633.7	533100.	465.8	503.6
SDev	514.5	.1305	4.073	742.1	1.645	3.171
%RSD	.2897	.51	.6426	.1392	.3531	.6297

Elems	Na3302	Ni2316	P_2149	2203-1	2203-2	Sb2068
Units	ppm	ppb	ppb	ppb	ppb	ppb
Avge	5.527	460.9	533.4	517.8	482.7	541.0
SDev	.1759	1.687	.7771	3.61	7.505	4.554
%RSD	3.183	.3659	.1457	.6971	1.555	.8419

Elems	1960-1	1960-2	Pb2203	Se1960	Sn1899	Sr4215
Units	ppb	ppb	ppb	ppb	ppb	ppb
Avge	551.8	532.9	494.4	539.2	519.4	514.1
SDev	7.606	10.46	3.804	4.675	5.933	1.336
%RSD	1.378	1.963	.7695	.867	1.142	.2598

Elems	Ti3349	Tl1908	V_2924	Zn2062	Si2881
Units	ppb	ppb	ppb	ppb	ppb
Avge	500.6	511.6	499.3	455.7	Q561.2
SDev	1.02	8.779	2.159	4.122	.1655
%RSD	.2038	1.716	.4324	.9045	.0295

Method: TRIANGL2 Sample Name: 183-3-38 X50 Operator: DKH
Run Time: 10/08/97 03:13 Filename: 100797
Mode: CONC Type: S Corr. Factor: 1.00000
Lab ID.: Cust. Smpl. ID.: Cust. ID.: 43231

Elems	Ag3280	As1890	Ba4934	Be3130	Cd2265	Co2286
Units	ppb	ppb	ppb	ppb	ppb	ppb
Avge	1.044	L2.503	5.520	L-.4856	5.922	L.1913
SDev	.1188	1.52	.0374	.1021	.0996	.2462
%RSD	11.38	60.73	.6779	21.03	1.682	128.8

Elems	Cr2677	Mn2576	Ni2316	P_2149	Pb2203	Sb2068
Units	ppb	ppb	ppb	ppb	ppb	ppb
Avge	3.314	275.1	L1.425	L9.324	314.2	L-.7330
SDev	.3705	.8535	.2619	6.96	1.483	2.275
%RSD	11.18	.3103	18.37	74.64	.4721	310.3

Elems	Se1960	Tl1908	Zn2062
Units	ppb	ppb	ppb
Avge	L-.2995	L-4.121	1695.
SDev	.8252	4.451	9.086
%RSD	275.5	108	.536

Method: TRIANGL2 Sample Name: 183-3-3B X50 DA Operator: DKH
Run Time: 10/08/97 03:17 Filename: 100797
Mode: CONC Type: S Corr. Factor: 1.00000
Lab ID.: Cust. Smpl. ID.: Cust. ID.: 43231

Elems	Ag3280	As1890	Ba4934	Be3130	Cd2265	Co2286
Units	ppb	ppb	ppb	ppb	ppb	ppb
Avge	L.9757	L1.265	5.506	L-.5472	6.065	L.1159
SDev	.1277	1.499	.0169	.0853	.1137	.472
%RSD	13.09	118.5	.3076	15.59	1.874	407.4

Elems	Cr2677	Mn2576	Ni2316	P_2149	Pb2203	Sb2068
Units	ppb	ppb	ppb	ppb	ppb	ppb
Avge	3.396	275.2	L1.512	L10.16	312.5	L.3145
SDev	.0287	.1284	.1862	2.719	1.139	.9085
%RSD	.8445	.0466	12.32	26.75	.3645	288.9

Elems	Se1960	Tl1908	Zn2062
Units	ppb	ppb	ppb
Avge	L.6587	L-.5729	1701.
SDev	1.008	2.393	6.754
%RSD	153	417.6	.397

Method: TRIANGL2 Sample Name: 183-3-58C Operator: DKH
Run Time: 10/08/97 03:22 Filename: 100797
Mode: CONC Type: S Corr. Factor: 1.00000
Lab ID.: Cust. Smpl. ID.: Cust. ID.: 43231

Elems	Ag3280	As1890	Ba4934	Be3130	Cd2265	Co2286
Units	ppb	ppb	ppb	ppb	ppb	ppb
Avge	L.4457	L-2.903	2.443	L-.6678	1.853	L-1.064
SDev	.551	1.387	.0193	.0861	.0232	.2394
%RSD	123.6	47.79	.7908	12.9	1.253	22.49

Elems	Cr2677	Mn2576	Ni2316	P_2149	Pb2203	Sb2068
Units	ppb	ppb	ppb	ppb	ppb	ppb
Avge	4.299	9.713	L-.8869	45.67	21.07	L.4292
SDev	.2999	.0352	.291	2.697	.4124	1.948
%RSD	6.977	.3625	32.81	5.906	1.957	453.9

Elems	Se1960	Tl1908	Zn2062
Units	ppb	ppb	ppb
Avge	12.21	L-9.163	119.9
SDev	1.489	2.242	.933
%RSD	12.19	24.46	.778

Method: TRIANGL2 Sample Name: 183-3-6C Operator: DKH
Run Time: 10/08/97 03:27 Filename: 100797
Mode: CONC Type: S Corr. Factor: 1.00000
Lab ID.: Cust. Smpl. ID.: Cust. ID.: 43231

Elems	Ag3280	As1890	Ba4934	Be3130	Cd2265	Co2286
Units	ppb	ppb	ppb	ppb	ppb	ppb
Avge	L.7462	L-3.814	3.063	L-.7413	1.053	L-1.179
SDev	.6181	1.747	.0374	.0963	.0361	.4345
%RSD	82.84	45.8	1.222	12.99	3.427	36.84

Elems	Cr2677	Mn2576	Ni2316	P_2149	Pb2203	Sb2068
Units	ppb	ppb	ppb	ppb	ppb	ppb
Avge	7.699	7.149	L.2620	86.70	16.76	L1.291
SDev	.3404	.0241	.6199	3.035	1.009	2.165
%RSD	4.421	.337	236.6	3.5	6.02	167.8

Elems	Se1960	Tl1908	Zn2062
Units	ppb	ppb	ppb
Avge	L.7528	L-10.08	119.2
SDev	1.169	2.541	1.505
%RSD	155.3	25.21	1.263

Method: TRIANGL2 Sample Name: 183-3-7C Operator: DKH
Run Time: 10/08/97 03:31 Filename: 100797
Mode: CONC Type: S Corr. Factor: 1.00000
Lab ID.: Cust. Smpl. ID.: Cust. ID.: 43231

Elems	Ag3280	As1890	Ba4934	Be3130	Cd2265	Co2286
Units	ppb	ppb	ppb	ppb	ppb	ppb
Avge	L.9317	L-3.666	7.064	L-.8442	L.8941	L-.7697
SDev	.2618	.6801	.0692	.0566	.2032	.4057
%RSD	28.1	18.55	.9797	6.709	22.72	52.72

Elems	Cr2677	Mn2576	Ni2316	P_2149	Pb2203	Sb2068
Units	ppb	ppb	ppb	ppb	ppb	ppb
Avge	9.822	8.633	L1.456	107.6	21.37	L.2146
SDev	.783	.1202	.6213	6.923	.6768	2.654
%RSD	7.972	1.393	42.68	6.432	3.168	1237

Elems	Se1960	Tl1908	Zn2062
Units	ppb	ppb	ppb
Avge	14.20	L-7.985	154.9
SDev	1.198	1.925	1.426
%RSD	8.437	24.11	.9203

Method: TRIANGL2 Sample Name: 183-3-8C Operator: DKH
Run Time: 10/08/97 03:36 Filename: 100797
Mode: CONC Type: S Corr. Factor: 1.00000
Lab ID.: Cust. Smpl. ID.: Cust. ID.: 43231

Elems	Ag3280	As1890	Ba4934	Be3130	Cd2265	Co2286
Units	ppb	ppb	ppb	ppb	ppb	ppb
Avge	L.5251	L-3.138	3.658	L-.8049	L.6627	L-1.302
SDev	.5607	1.168	.0731	.0684	.0519	.6143
%RSD	106.8	37.21	1.997	8.494	7.839	47.17

Elems	Cr2677	Mn2576	Ni2316	P_2149	Pb2203	Sb2068
Units	ppb	ppb	ppb	ppb	ppb	ppb
Avge	8.300	16.37	8.018	111.5	24.25	L-.6075
SDev	.5082	.1623	1.394	.1818	1.223	1.192
%RSD	6.124	.9914	17.39	.163	5.044	196.3

Elems	Se1960	Tl1908	Zn2062
Units	ppb	ppb	ppb
Avge	L1.416	L-9.210	143.9
SDev	.7877	2.172	1.707
%RSD	55.65	23.58	1.186

Method: TRIANGL2 Sample Name: 43231 MB Operator: DKH
Run Time: 10/08/97 03:41 Filename: 100797
Mode: CONC Type: S Corr. Factor: 1.00000
Lab ID.: Cust. Smpl. ID.: Cust. ID.: 43231

Elems	Ag3280	As1890	Ba4934	Be3130	Cd2265	Co2286
Units	ppb	ppb	ppb	ppb	ppb	ppb
Avge	L-.0396	L-1.678	L-.0358	L-.8093	L-.2443	L-.5261
SDev	.1657	2.249	.0228	.0378	.0286	.1993
%RSD	419	134	63.59	4.668	11.71	37.89

Elems	Cr2677	Mn2576	Ni2316	P_2149	Pb2203	Sb2068
Units	ppb	ppb	ppb	ppb	ppb	ppb
Avge	L.0685	2.844	L-1.131	L-13.83	L1.672	L-.8198
SDev	.1353	.0327	.8425	5.068	1.382	.1904
%RSD	197.5	1.149	74.48	36.64	82.69	23.23

Elems	Se1960	Tl1908	Zn2062
Units	ppb	ppb	ppb
Avge	L.2343	L-5.424	9.791
SDev	1.519	3.046	.3881
%RSD	648.4	56.16	3.964

Method: TRIANGL2 Sample Name: 43231 LCS Operator: DKH
Run Time: 10/08/97 03:45 Filename: 100797
Mode: CONC Type: S Corr. Factor: 1.00000
Lab ID.: Cust. Smpl. ID.: Cust. ID.: 43231

Elems	Ag3280	As1890	Ba4934	Be3130	Cd2265	Co2286
Units	ppb	ppb	ppb	ppb	ppb	ppb
Avge	43.16	44.64	46.44	45.27	45.89	46.96
SDev	.5728	2.289	.0724	.212	.1659	.7293
%RSD	1.327	5.129	.1559	.4684	.3616	1.553

Elems	Cr2677	Mn2576	Ni2316	P_2149	Pb2203	Sb2068
Units	ppb	ppb	ppb	ppb	ppb	ppb
Avge	46.87	47.66	45.34	904.6	46.69	47.00
SDev	.5382	.2079	.9026	4.625	.419	2.523
%RSD	1.148	.4362	1.991	.5112	.8974	5.368

Elems	Se1960	Tl1908	Zn2062
Units	ppb	ppb	ppb
Avge	44.37	41.73	192.4
SDev	1.676	5.652	1.968
%RSD	3.777	13.54	1.023

Method: TRIANGL2 Sample Name: 184-23-1A8 X50 Operator: OKH
Run Time: 10/08/97 03:50 Filename: 100797
Mode: CONC Type: S Corr. Factor: 1.00000
Lab ID.: Cust. Smpl. ID.: Cust. ID.: 43231

Omit. 10-29-97

Zn high

Elems	Ag3280	As1890	Ba4934	Be3130	Cd2265	Cr2677
Units	ppb	ppb	ppb	ppb	ppb	ppb
Avge	2.106	29.07	281.0	L-.4995	271.5	244.8
SDev	.2924	1.681	.5952	.0279	1.224	1.562
%RSD	13.88	5.781	.2118	5.586	.4507	.638

Elems	Mn2576	Ni2316	Sb2068	Pb2203	Se1960	P_2149
Units	ppb	ppb	ppb	ppb	ppb	ppb
Avge	15900.	56.60	163.0	15620.	14.83	356.3
SDev	48.69	.2706	3.625	40.79	.8455	9.271
%RSD	.3063	.4782	2.224	.2611	5.703	2.602

Elems	Zn2062
Units	ppb
Avge	871380.
SDev	503.5
%RSD	.7055

omit
Zn high
10-28-97

Method: TRIANGL2 Sample Name: 184-23-2A8 X50 Operator: DKH
Run Time: 10/08/97 03:55 Filename: 100797
Mode: CONC Type: S Corr. Factor: 1.00000
Lab ID.: Cust. Smpl. ID.: Cust. ID.: 43231

Elems	Ag3280	As1890	Ba4934	Be3130	Cd2265	Cr2677
Units	ppb	ppb	ppb	ppb	ppb	ppb
Avge	3.976	51.11	560.7	2.292	737.2	477.8
SDev	.2115	.435	1.436	.0471	1.865	1.329
%RSD	5.32	.8512	.2561	2.056	.2529	.2782

Elems	Mn2576	Ni2316	Sb2068	Pb2203	Se1960	P_2149
Units	ppb	ppb	ppb	ppb	ppb	ppb
Avge	H37240.	91.50	286.0	38770.	21.79	584.0
SDev	95.42	.1286	3.869	134.1	3.714	6.085
%RSD	.2563	.1406	1.353	.3458	17.04	1.042

Elems	Zn2062
Units	ppb
Avge	H179200.
SDev	958.6
%RSD	.5349

Method: TRIANGL2 Sample Name: ICV/CCV Operator: DKH
Run Time: 10/08/97 04:14 Filename: 100797
Mode: CONC Type: Q Corr. Factor: 1.00000
Lab ID.: Cust. Smpl. ID.: Cust. ID.: 43231

Elems	Ag3280	Al3082	As1890	B_2496	Ba4934	Be3130
Units	ppb	ppb	ppb	ppb	ppb	ppb
Avge	517.9	460.7	517.2	506.6	505.5	520.7
SDev	4.507	18.55	1.425	1.399	1.147	1.784
%RSD	.8703	4.026	.2756	.2762	.2269	.3427

Elems	Ca3179	Cd2265	Ce4186	Co2286	Cr2677	Cu3247
Units	ppb	ppb	ppb	ppb	ppb	ppb
Avge	513.9	505.6	501.8	516.4	509.7	506.5
SDev	1.302	.883	.6708	1.013	1.124	4.846
%RSD	.2534	.1746	.1337	.1961	.2204	.9567

Elems	Fe2714	K_7664	Li6707	Mg2790	Mn2576	Mo2020
Units	ppb	ppm	ppb	ppb	ppb	ppb
Avge	514.6	5.130	496.9	510.8	507.2	510.8
SDev	6.603	.0308	3.029	6.294	1.056	.8218
%RSD	1.283	.5996	.6096	1.232	.2081	.1609

Elems	Na3302	Ni2316	P_2149	2203-1	2203-2	Sb2068
Units	ppm	ppb	ppb	ppb	ppb	ppb
Avge	5.187	504.0	518.3	515.5	506.0	488.5
SDev	.204	1.02	3.507	5.643	4.409	6.627
%RSD	3.932	.2023	.6766	1.095	.8714	1.356

Elems	1960-1	1960-2	Pb2203	Se1960	Sn1899	Sr4215
Units	ppb	ppb	ppb	ppb	ppb	ppb
Avge	523.3	517.6	509.2	519.5	509.7	500.8
SDev	6.133	.7649	1.529	1.557	1.421	.6648
%RSD	1.172	.1478	.3003	.2997	.2789	.1327

Elems	Ti3349	Tl1908	V_2924	Zn2062	Si2881
Units	ppb	ppb	ppb	ppb	ppb
Avge	501.5	514.0	513.0	520.2	Q4031.
SDev	.5115	14.4	.6666	1.145	40.92
%RSD	.102	2.801	.1299	.2202	1.015

Method: TRIANGL2 Sample Name: ICB/CCB Operator: DKH
Run Time: 10/08/97 04:21 Filename: 100797
Mode: CONC Type: Q Corr. Factor: 1.00000
Lab ID.: Cust. Smpl. ID.: Cust. ID.: 43231

Elems	Ag3280	Al3082	As1890	B_2496	Ba4934	Be3130
Units	ppb	ppb	ppb	ppb	ppb	ppb
Avge	.3128	Q-55.57	2.068	-2.761	.2773	-.5910
SDev	.3591	10.97	1.174	1.116	.0693	.188
%RSD	114.8	19.74	56.77	40.43	24.98	31.81

Elems	Ca3179	Cd2265	Ce4186	Co2286	Cr2677	Cu3247
Units	ppb	ppb	ppb	ppb	ppb	ppb
Avge	3.224	.3109	-.4351	.5022	-.0139	.8741
SDev	.5812	.0926	.9053	.031	.2684	.4261
%RSD	18.03	29.8	208.1	6.182	1932	48.74

Elems	Fe2714	K_7664	Li6707	Mg2790	Mn2576	Mo2020
Units	ppb	ppm	ppb	ppb	ppb	ppb
Avge	-1.564	.0383	.3578	-2.137	.5610	.0916
SDev	4.462	.026	.0314	.3262	.1751	.2306
%RSD	285.3	67.84	8.78	15.26	31.21	251.6

Elems	Na3302	Ni2316	P_2149	2203-1	2203-2	Sb2068
Units	ppm	ppb	ppb	ppb	ppb	ppb
Avge	.0201	.7390	.8917	-1.575	.2739	2.822
SDev	.0566	.4273	7.335	3.249	.4365	1.423
%RSD	281	57.82	822.6	206.4	159.4	50.44

Elems	1960-1	1960-2	Pb2203	Se1960	Sn1899	Sr4215
Units	ppb	ppb	ppb	ppb	ppb	ppb
Avge	1.335	-3.378	-.3417	-1.809	.6920	.2953
SDev	4.77	1.336	1.369	2.419	.957	.0741
%RSD	357.3	39.55	400.8	133.7	138.3	25.1

Elems	Ti3349	Tl1908	V_2924	Zn2062	Si2881
Units	ppb	ppb	ppb	ppb	ppb
Avge	.2912	1.979	-.2019	1.549	9.747
SDev	.0837	.7565	.3413	.3892	3.493
%RSD	28.74	38.24	169	25.14	35.83

Method: TRIANGL2 Sample Name: 184-23-1A8 X200 Operator: DKH
Run Time: 10/08/97 04:26 Filename: 100797
Mode: CONC Type: S Corr. Factor: 1.00000
Lab ID.: Cust. Smpl. ID.: Cust. ID.: 43231

Elems	Ag3280	As1890	Ba4934	Be3130	Cd2265	Co2286
Units	ppb	ppb	ppb	ppb	ppb	ppb
Avge	L.7194	9.565	72.20	L-.7956	70.37	1.860
SDev	.3148	1.313	.4395	.084	.3039	.2726
%RSD	43.75	13.73	.6087	10.56	.4319	14.66

Elems	Cr2677	Mn2576	Ni2316	P_2149	Pb2203	Sb2068
Units	ppb	ppb	ppb	ppb	ppb	ppb
Avge	63.44	4246.	15.61	92.21	4059.	43.64
SDev	.2711	9.774	.2253	7.586	11.67	1.385
%RSD	.4274	.2302	1.443	8.227	.2875	3.174

Elems	Se1960	Tl1908	Zn2062
Units	ppb	ppb	ppb
Avge	L2.392	L1.165	19590.
SDev	2.038	1.445	133.7
%RSD	85.17	124	.6826

Method: TRIANGL2 Sample Name: 184-23-2A8 X200 Operator: DKH
Run Time: 10/08/97 04:31 Filename: 100797
Mode: CONC Type: S Corr. Factor: 1.00000
Lab ID.: Cust. Smpl. ID.: Cust. ID.: 43231

Elems	Ag3280	As1890	Ba4934	Be3130	Cd2265	Co2286
Units	ppb	ppb	ppb	ppb	ppb	ppb
Avge	L.9297	15.16	143.3	L-.1602	191.9	2.426
SDev	.1652	.9641	.5275	.0517	.7189	.2134
%RSD	17.77	6.36	.3681	32.31	.3747	8.795

Elems	Cr2677	Mn2576	Ni2316	P_2149	Pb2203	Sb2068
Units	ppb	ppb	ppb	ppb	ppb	ppb
Avge	123.1	10530.	24.49	150.6	10050.	73.48
SDev	.3161	25.72	.4927	.7415	25.17	1.203
%RSD	.2568	.2441	2.012	.4922	.2503	1.637

Elems	Se1960	Tl1908	Zn2062
Units	ppb	ppb	ppb
Avge	4.951	7.234	56240.
SDev	1.055	2.025	399.3
%RSD	21.32	28	.7099

N/A
Sample Rerun on 10/30/97
DK 10-30-97

Method: TRIANGL2 Sample Name: 184-23-2A8 X200 L Operator: DKH
Run Time: 10/08/97 04:36 Filename: 100797
Mode: CONC Type: S Corr. Factor: 1.00000
Lab ID.: Cust. Smpl. ID.: Cust. ID.: 43231

Elems	Ag3280	As1890	Ba4934	Be3130	Cd2265	Co2286
Units	ppb	ppb	ppb	ppb	ppb	ppb
Avge	L.1229	6.008	29.30	L-.8341	39.49	L.4516
SDev	.2684	.4912	.0327	.0684	.1391	.3627
%RSD	218.3	8.176	.1116	8.202	.3522	80.31

Elems	Cr2677	Mn2576	Ni2316	P_2149	Pb2203	Sb2068
Units	ppb	ppb	ppb	ppb	ppb	ppb
Avge	24.93	2214.	5.732	33.61	2069.	15.78
SDev	.4886	7.977	.7371	1.725	6.866	.6887
%RSD	1.96	.3603	12.86	5.133	.3319	4.364

Elems	Se1960	Tl1908	Zn2062
Units	ppb	ppb	ppb
Avge	L.4348	L1.873	12160.
SDev	1.085	.7286	79.66
%RSD	249.5	38.9	.6551

Method: TRIANGL2 Sample Name: 184-23-3A8 X200 Operator: DKH
Run Time: 10/08/97 04:40 Filename: 100797
Mode: CONC Type: S Corr. Factor: 1.00000
Lab ID.: Cust. Smpl. ID.: Cust. ID.: 43231

Elems	Ag3280	As1890	Ba4934	Be3130	Cd2265	Co2286
Units	ppb	ppb	ppb	ppb	ppb	ppb
Avge	L.6353	15.68	124.8	L-.5840	150.5	2.487
SDev	.2422	1.31	.4022	.0355	.8995	.4445
%RSD	38.12	8.355	.3223	6.079	.5975	17.87

Elems	Cr2677	Mn2576	Ni2316	P_2149	Pb2203	Sb2068
Units	ppb	ppb	ppb	ppb	ppb	ppb
Avge	101.7	8286.	24.91	3054.	7390.	64.67
SDev	.9317	40.56	.4901	10.03	47.67	1.253
%RSD	.9157	.4895	1.967	.3284	.6451	1.937

Elems	Se1960	Tl1908	Zn2062
Units	ppb	ppb	ppb
Avge	4.709	5.921	38710.
SDev	1.534	1.674	381.9
%RSD	32.57	28.27	.9866

Method: TRIANGL2 Sample Name: 184-23-3AB X200 DA Operator: DKH
Run Time: 10/08/97 04:47 Filename: 100797
Mode: CONC Type: S Corr. Factor: 1.00000
Lab ID.: Cust. Smpl. ID.: Cust. ID.: 43231

Elems	Ag3280	As1890	Ba4934	Be3130	Cd2265	Co2286
Units	ppb	ppb	ppb	ppb	ppb	ppb
Avge	L.8864	17.30	127.0	L-.5885	153.5	3.318
SDev	.1601	1.648	.3263	.0714	.7414	.4442
%RSD	18.06	9.526	.2569	12.14	.483	13.38

Elems	Cr2677	Mn2576	Ni2316	P_2149	Pb2203	Sb2068
Units	ppb	ppb	ppb	ppb	ppb	ppb
Avge	104.1	8430.	25.63	3137.	7544.	68.21
SDev	.6927	47.33	.4261	4.917	51	1.216
%RSD	.6653	.5615	1.662	.1567	.676	1.783

Elems	Se1960	Tl1908	Zn2062
Units	ppb	ppb	ppb
Avge	6.213	L3.271	39480.
SDev	.2846	2.775	440.8
%RSD	4.581	84.85	1.117

Method: TRIANGL2 Sample Name: 184-23-4A8 Operator: DKH
Run Time: 10/08/97 05:01 Filename: 100797
Mode: CONC Type: S Corr. Factor: 1.00000
Lab ID.: Cust. Smpl. ID.: Cust. ID.: 43231

Elems	Ag3280	As1890	Ba4934	Be3130	Cd2265	Co2286
Units	ppb	ppb	ppb	ppb	ppb	ppb
Avge	66.89	32.62	498.7	L-51.18	1692.	35.48
SDev	.7716	2.77	.9166	.1834	8.242	1.033
%RSD	1.154	8.49	.1838	.3584	.4871	2.911

Elems	Cr2677	Mn2576	Ni2316	P_2149	Pb2203	Sb2068
Units	ppb	ppb	ppb	ppb	ppb	ppb
Avge	319.3	336.8	180.9	1252.	5839.	47.57
SDev	1.052	.8933	.5335	6.946	46.04	2.725
%RSD	.3295	.2652	.2948	.5549	.7885	5.728

Elems	Se1960	Tl1908	Zn2062
Units	ppb	ppb	ppb
Avge	40.79	L-6.404	1619.
SDev	2.281	3.978	12.64
%RSD	5.593	62.11	.7807

Method: TRIANGL2 Sample Name: 184-23-6AB Operator: DKH
Run Time: 10/08/97 05:14 Filename: 100797
Mode: CONC Type: S Corr. Factor: 1.00000
Lab ID.: Cust. Smpl. ID.: Cust. ID.: 43231

Elems	Ag3280	As1890	Ba4934	Be3130	Cd2265	Co2286
Units	ppb	ppb	ppb	ppb	ppb	ppb
Avge	3.703	9.119	640.5	L-1.231	349.6	L-24.98
SDev	.417	.6883	2.817	.1135	3.283	1.177
%RSD	11.26	7.548	.4398	9.22	.9392	4.713

Elems	Cr2677	Mn2576	Ni2316	P_2149	Pb2203	Sb2068
Units	ppb	ppb	ppb	ppb	ppb	ppb
Avge	99.38	394.0	64.69	905.6	1789.	54.73
SDev	1.763	2.922	1.515	13.26	21.76	7.679
%RSD	1.774	.7416	2.343	1.465	1.216	14.03

Elems	Se1960	Tl1908	Zn2062
Units	ppb	ppb	ppb
Avge	48.29	L-37.40	1532.
SDev	1.461	4.864	27.83
%RSD	3.026	13	1.816

Method: TRIANGL2 Sample Name: 184-23-7A8 Operator: DKH
Run Time: 10/08/97 05:22 Filename: 100797
Mode: CONC Type: S Corr. Factor: 1.00000
Lab ID.: Cust. Smpl. ID.: Cust. ID.: 43231

Elems	Ag3280	As1890	Ba4934	Be3130	Cd2265	Co2286
Units	ppb	ppb	ppb	ppb	ppb	ppb
Avge	3.501	8.426	635.8	L-1.212	9.254	L-25.88
SDev	.4752	1.632	3.038	.0923	.506	1.322
%RSD	13.57	19.37	.4779	7.616	5.468	5.111

Elems	Cr2677	Mn2576	Ni2316	P_2149	Pb2203	Sb2068
Units	ppb	ppb	ppb	ppb	ppb	ppb
Avge	93.83	550.6	58.20	810.3	404.0	55.62
SDev	2.26	4.139	2.158	10.63	2.931	4.187
%RSD	2.409	.7518	3.708	1.312	.7254	7.528

Elems	Se1960	Tl1908	Zn2062
Units	ppb	ppb	ppb
Avge	48.53	L-36.83	2495.
SDev	2.15	6.274	43.83
%RSD	4.43	17.04	1.757

Method: TRIANGL2 Sample Name: 184-23-8A8 Operator: DKH
Run Time: 10/08/97 05:32 Filename: 100797
Mode: CONC Type: S Corr. Factor: 1.00000
Lab ID.: Cust. Smpl. ID.: Cust. ID.: 43231

Elems	Ag3280	As1890	Ba4934	Be3130	Cd2265	Co2286
Units	ppb	ppb	ppb	ppb	ppb	ppb
Avge	8.771	10.13	672.5	L-1.286	102.2	L-27.12
SDev	.7565	4.634	3.113	.0941	1.213	1.247
%RSD	8.625	45.73	.4629	7.317	1.186	4.598

Elems	Cr2677	Mn2576	Ni2316	P_2149	Pb2203	Sb2068
Units	ppb	ppb	ppb	ppb	ppb	ppb
Avge	107.5	920.2	64.98	708.1	943.6	60.84
SDev	2.244	5.867	2.023	11.84	7.653	5.1
%RSD	2.088	.6375	3.114	1.672	.811	8.383

Elems	Se1960	Tl1908	Zn2062
Units	ppb	ppb	ppb
Avge	52.38	L-37.50	5842.
SDev	4.894	4.205	86.33
%RSD	9.342	11.21	1.478

Method: TRIANGL2 Sample Name: ICV/CCV Operator: DKH
Run Time: 10/08/97 05:40 Filename: 100797
Mode: CONC Type: Q Corr. Factor: 1.00000
Lab ID.: Cust. Smpl. ID.: Cust. ID.: 43231

Elems	Ag3280	Al3082	As1890	B_2496	Ba4934	Be3130
Units	ppb	ppb	ppb	ppb	ppb	ppb
Avge	512.8	Q434.7	512.8	3610.	504.0	525.4
SDev	2.075	17.43	2.122	425	2.289	3.864
%RSD	.4045	4.01	.4139	11.77	.4542	.7354

Elems	Ca3179	Cd2265	Ce4186	Co2286	Cr2677	Cu3247
Units	ppb	ppb	ppb	ppb	ppb	ppb
Avge	508.1	497.1	496.9	514.0	507.4	504.9
SDev	4.888	3.6	2.988	3.626	4.47	4.972
%RSD	.9622	.7242	.6012	.7054	.881	.9848

Elems	Fe2714	K_7664	Li6707	Mg2790	Mn2576	Mo2020
Units	ppb	ppm	ppb	ppb	ppb	ppb
Avge	505.5	5.094	495.0	505.7	505.0	506.5
SDev	13.94	.0235	2.076	5.241	2.909	3.03
%RSD	2.758	.4614	.4194	1.036	.576	.5982

Elems	Na3302	Ni2316	P_2149	2203-1	2203-2	Sb2068
Units	ppm	ppb	ppb	ppb	ppb	ppb
Avge	5.139	498.7	513.5	512.1	487.1	485.8
SDev	.0783	2.831	5.308	5.822	7.439	6.261
%RSD	1.524	.5677	1.034	1.137	1.527	1.289

Elems	1960-1	1960-2	Pb2203	Se1960	Sn1899	Sr4215
Units	ppb	ppb	ppb	ppb	ppb	ppb
Avge	522.6	508.1	495.4	513.0	503.3	500.4
SDev	4.038	3.688	3.945	2.916	4.294	1.525
%RSD	.7726	.7257	.7963	.5684	.8532	.3048

Elems	Ti3349	Tl1908	V_2924	Zn2062	Si2881
Units	ppb	ppb	ppb	ppb	ppb
Avge	495.1	506.0	512.4	511.0	Q59310.
SDev	1.193	13.35	2.89	7.061	3810
%RSD	.2411	2.639	.564	1.382	6.423

Method: TRIANGL2 Sample Name: ICB/CCB Operator: DKH
Run Time: 10/08/97 06:06 Filename: 100797
Mode: CONC Type: Q Corr. Factor: 1.00000
Lab ID.: Cust. Smpl. ID.: Cust. ID.: 43231

Elems	Ag3280	Al3082	As1890	B_2496	Ba4934	Be3130
Units	ppb	ppb	ppb	ppb	ppb	ppb
Avge	.2309	Q-53.89	2.654	2256.	-.0779	-.9839
SDev	.5822	8.679	2.048	158.8	.0367	.0908
%RSD	252.1	16.11	77.17	7.037	47.14	9.226

Elems	Ca3179	Cd2265	Ce4186	Co2286	Cr2677	Cu3247
Units	ppb	ppb	ppb	ppb	ppb	ppb
Avge	.3246	.7877	.6887	-.2525	.0688	.0251
SDev	1.112	.0724	1.897	.6182	.5652	.1111
%RSD	342.5	9.186	275.5	244.8	821.5	443.5

Elems	Fe2714	K_7664	Li6707	Mg2790	Mn2576	Mo2020
Units	ppb	ppm	ppb	ppb	ppb	ppb
Avge	-.8432	.0036	-.1073	-3.960	-.0765	-.7988
SDev	9.396	.0403	.0846	3.642	.0157	.1386
%RSD	1114	1114	78.76	91.99	20.56	17.35

Elems	Na3302	Ni2316	P_2149	2203-1	2203-2	Sb2068
Units	ppm	ppb	ppb	ppb	ppb	ppb
Avge	.0906	-.1408	3.792	-.8636	.4220	-1.775
SDev	.0971	.1854	7.114	3.54	1.571	2.381
%RSD	107.2	131.7	187.6	409.9	372.2	134.2

Elems	1960-1	1960-2	Pb2203	Se1960	Sn1899	Sr4215
Units	ppb	ppb	ppb	ppb	ppb	ppb
Avge	5.736	-1.977	-.0061	.5911	-1.153	-.0681
SDev	2.575	.6189	2.035	.6391	.2231	.0303
%RSD	44.89	31.3	33330	108.1	19.34	44.45

Elems	Ti3349	Tl1908	V_2924	Zn2062	Si2881
Units	ppb	ppb	ppb	ppb	ppb
Avge	-.1543	-.8034	-.9228	-.3258	Q6815.
SDev	.1032	.9901	.6983	.1348	1692
%RSD	66.87	123.2	75.67	41.38	24.82

Method: TRIANGL2 Sample Name: 184-23-9A8 Operator: DKH
Run Time: 10/08/97 06:11 Filename: 100797
Mode: CONC Type: S Corr. Factor: 1.00000
Lab ID.: Cust. Smpl. ID.: Cust. ID.: 43231

Elems	Ag3280	As1890	Ba4934	Be3130	Cd2265	Co2286
Units	ppb	ppb	ppb	ppb	ppb	ppb
Avge	1.896	15.11	622.4	L-1.061	L-6.678	L-23.92
SDev	.4018	3.117	2.207	.0619	.3033	.6385
%RSD	21.19	20.63	.3546	5.83	4.542	2.669

Elems	Cr2677	Mn2576	Ni2316	P_2149	Pb2203	Sb2068
Units	ppb	ppb	ppb	ppb	ppb	ppb
Avge	92.61	26.98	59.94	786.7	L-.9452	60.11
SDev	1.197	.2808	.6297	7.513	.5112	5.605
%RSD	1.293	1.041	1.05	.955	54.08	9.325

Elems	Se1960	Tl1908	Zn2062
Units	ppb	ppb	ppb
Avge	51.48	L-41.02	51.73
SDev	1.433	2.863	1.489
%RSD	2.785	6.979	2.878

Method: TRIANGL2 Sample Name: 184-23-10AB,5 Operator: DKH
Run Time: 10/08/97 06:20 Filename: 100797
Mode: CONC Type: S Corr. Factor: 1.00000
Lab ID.: Cust. Smpl. ID.: Cust. ID.: 43231

Elems	Ag3280	As1890	Ba4934	Be3130	Cd2265	Co2286
Units	ppb	ppb	ppb	ppb	ppb	ppb
Avge	3.105	33.47	1035.	L-55.53	L-6.706	27.75
SDev	.707	5.345	5.434	.4368	.161	1.328
%RSD	22.77	15.97	.5249	.7866	2.401	4.786

Elems	Cr2677	Mn2576	Ni2316	P_2149	Pb2203	Sb2068
Units	ppb	ppb	ppb	ppb	ppb	ppb
Avge	402.9	239.7	158.1	788.1	57.98	69.89
SDev	5.14	1.855	1.882	13.88	2.485	6.015
%RSD	1.276	.7739	1.19	1.761	4.287	8.607

Elems	Se1960	Tl1908	Zn2062
Units	ppb	ppb	ppb
Avge	60.90	L-15.12	564.6
SDev	1.602	9.699	11.02
%RSD	2.631	64.13	1.952

Method: TRIANGL2 Sample Name: 183-15-1C Operator: DKH
Run Time: 10/08/97 06:25 Filename: 100797
Mode: CONC Type: S Corr. Factor: 1.00000
Lab ID.: Cust. Smpl. ID.: Cust. ID.: 43231

Elems	Ag3280	As1890	Ba4934	Be3130	Cd2265	Co2286
Units	ppb	ppb	ppb	ppb	ppb	ppb
Avge	L.5711	7.872	3.212	L-1.241	L-.8955	L-3.361
SDev	.3791	3.012	.0806	.0341	.1938	.2172
%RSD	66.38	38.26	2.509	2.746	21.64	6.464

Elems	Cr2677	Mn2576	Ni2316	P_2149	Pb2203	Sb2068
Units	ppb	ppb	ppb	ppb	ppb	ppb
Avge	13.98	3.676	8.472	L2.904	L.4317	4.816
SDev	1.376	.031	.8048	4.614	1.306	2.022
%RSD	9.837	.8445	9.499	158.9	302.6	41.99

Elems	Se1960	Tl1908	Zn2062
Units	ppb	ppb	ppb
Avge	8.973	L-10.79	12.31
SDev	1.557	2.52	.3826
%RSD	17.35	23.36	3.107

Method: TRIANGL2 Sample Name: ICV/CCV Operator: DKH
Run Time: 10/08/97 06:29 Filename: 100797
Mode: CONC Type: Q Corr. Factor: 1.00000
Lab ID.: Cust. Smpl. ID.: Cust. ID.: 43231

Elems	Ag3280	Al3082	As1890	B_2496	Ba4934	Be3130
Units	ppb	ppb	ppb	ppb	ppb	ppb
Avge	Q341.9	Q188.1	Q348.8	2327.	Q337.8	Q345.4
SDev	296.5	447.3	297.2	1261	292.6	301.9
%RSD	86.7	237.8	85.21	54.2	86.62	87.41

Elems	Ca3179	Cd2265	Ce4186	Co2286	Cr2677	Cu3247
Units	ppb	ppb	ppb	ppb	ppb	ppb
Avge	Q390.3	Q332.3	324.6	Q335.6	Q337.4	Q330.5
SDev	321.7	287.8	280.8	290	290.2	295.4
%RSD	82.42	86.59	86.5	86.44	86	89.38

Elems	Fe2714	K_7664	Li6707	Mg2790	Mn2576	Mo2020
Units	ppb	ppm	ppb	ppb	ppb	ppb
Avge	Q256.3	Q3.664	Q327.7	Q293.4	Q334.6	Q334.6
SDev	247.9	2.417	282.1	264.5	289.9	290.2
%RSD	96.69	65.97	86.08	90.13	86.64	86.72

Elems	Na3302	Ni2316	P_2149	2203-1	2203-2	Sb2068
Units	ppm	ppb	ppb	ppb	ppb	ppb
Avge	Q3.351	Q333.5	Q320.1	301.5	324.5	Q319.6
SDev	3.109	285.7	263	276	279.8	276.7
%RSD	92.78	85.67	82.15	91.56	86.21	86.55

Elems	1960-1	1960-2	Pb2203	Se1960	Sn1899	Sr4215
Units	ppb	ppb	ppb	ppb	ppb	ppb
Avge	320.5	336.3	Q316.8	Q331.0	Q336.1	Q333.2
SDev	271.6	296.9	277	286.9	293	288.5
%RSD	84.74	88.29	87.41	86.66	87.15	86.6

Elems	Ti3349	Tl1908	V_2924	Zn2062	Si2881
Units	ppb	ppb	ppb	ppb	ppb
Avge	Q328.6	Q342.4	Q340.6	Q335.0	Q113400
SDev	284.4	291.9	288.8	290.4	68380
%RSD	86.56	85.24	84.79	86.71	60.31

Cup ran out
Not used
10-23-97

Method: TRIANGL2 Sample Name: 183-15-18D Operator: DKH
Run Time: 10/08/97 06:34 Filename: 100797
Mode: CONC Type: S Corr. Factor: 1.00000
Lab ID.: Cust. Smpl. ID.: Cust. ID.: 43231

Elems	Ag3280	As1890	Ba4934	Be3130	Cd2265	Co2286
Units	ppb	ppb	ppb	ppb	ppb	ppb
Avge	1.186	L-4.801	4.324	L-.9855	L-1.092	L-4.620
SDev	.6274	4.186	.0528	.1946	1.363	3.53
%RSD	52.91	87.2	1.221	19.74	124.8	76.41

Elems	Cr2677	Mn2576	Ni2316	P_2149	Pb2203	Sb2068
Units	ppb	ppb	ppb	ppb	ppb	ppb
Avge	17.92	6.018	5.207	126.4	9.672	8.746
SDev	2.965	.2937	3.437	33.78	2.535	9.177
%RSD	16.55	4.881	66.01	26.72	26.21	104.9

Elems	Se1960	Tl1908	Zn2062
Units	ppb	ppb	ppb
Avge	6.364	L-11.77	127.0
SDev	.3434	1.767	4.356
%RSD	5.396	15.01	3.43

Method: TRIANGL2 Sample Name: ICV/CCV Operator: DKH
Run Time: 10/08/97 06:39 Filename: 100797
Mode: CONC Type: Q Corr. Factor: 1.00000
Lab ID.: Cust. Smpl. ID.: Cust. ID.: 43231

Elems	Ag3280	Al3082	As1890	B_2496	Ba4934	Be3130
Units	ppb	ppb	ppb	ppb	ppb	ppb
Avge	516.3	Q432.2	518.4	4301.	509.3	526.6
SDev	1.698	9.11	1.35	431.4	1.147	1.61
%RSD	.329	2.108	.2605	10.03	.2252	.3057

Elems	Ca3179	Cd2265	Ce4186	Co2286	Cr2677	Cu3247
Units	ppb	ppb	ppb	ppb	ppb	ppb
Avge	509.7	508.3	504.2	516.5	511.4	502.9
SDev	.9727	1.252	1.592	1.185	1.083	2.779
%RSD	.1908	.2464	.3157	.2294	.2117	.5526

Elems	Fe2714	K_7664	Li6707	Mg2790	Mn2576	Mo2020
Units	ppb	ppm	ppb	ppb	ppb	ppb
Avge	507.8	5.204	497.5	506.2	509.9	508.2
SDev	4.159	.0272	4.19	5.785	1.03	2.182
%RSD	.819	.5225	.8423	1.143	.202	.4294

Elems	Na3302	Ni2316	P_2149	2203-1	2203-2	Sb2068
Units	ppm	ppb	ppb	ppb	ppb	ppb
Avge	5.205	507.5	522.2	508.0	500.9	494.3
SDev	.1597	1.15	6.02	5.345	6.825	5.041
%RSD	3.068	.2267	1.153	1.052	1.363	1.02

Elems	1960-1	1960-2	Pb2203	Se1960	Sn1899	Sr4215
Units	ppb	ppb	ppb	ppb	ppb	ppb
Avge	526.9	511.1	503.3	516.4	506.0	502.4
SDev	.8198	.6881	2.774	.2838	.7443	.6572
%RSD	.1556	.1346	.5513	.055	.1471	.1308

Elems	Ti3349	Tl1908	V_2924	Zn2062	Si2881
Units	ppb	ppb	ppb	ppb	ppb
Avge	497.7	513.5	515.0	514.6	Q44760.
SDev	.839	3.944	1.022	3.424	1116
%RSD	.1686	.7681	.1985	.6655	2.493

Method: TRIANGL2 Sample Name: IC8/CC8 Operator: DKH
Run Time: 10/08/97 06:50 Filename: 100797
Mode: CONC Type: Q Corr. Factor: 1.00000
Lab ID.: Cust. Smpl. ID.: Cust. ID.: 43231

Elems	Ag3280	Al3082	As1890	B_2496	Ba4934	Be3130
Units	ppb	ppb	ppb	ppb	ppb	ppb
Avge	.1747	Q-74.49	3.113	2950.	-.0343	Q-1.163
SDev	.2575	6.276	2.751	355.5	.0694	.0684
%RSD	147.4	8.426	88.39	12.05	202.6	5.885

Elems	Ca3179	Cd2265	Ce4186	Co2286	Cr2677	Cu3247
Units	ppb	ppb	ppb	ppb	ppb	ppb
Avge	1.500	-.2270	-.2441	-.3791	.7813	.1096
SDev	.9785	.2033	1.225	.6709	.8068	.0587
%RSD	65.23	89.54	501.8	177	103.3	53.58

Elems	Fe2714	K_7664	Li6707	Mg2790	Mn2576	Mo2020
Units	ppb	ppm	ppb	ppb	ppb	ppb
Avge	-1.281	.0347	.0343	-4.398	-.0473	-.4506
SDev	6.35	.0401	.0697	4.759	.0454	.2341
%RSD	495.6	115.5	203.3	108.2	95.89	51.95

Elems	Na3302	Ni2316	P_2149	2203-1	2203-2	Sb2068
Units	ppm	ppb	ppb	ppb	ppb	ppb
Avge	.0537	.9256	.6120	-2.038	-1.540	.8408
SDev	.1344	.476	5.274	3.557	.5084	3.233
%RSD	250.4	51.42	861.8	174.5	33.01	384.6

Elems	1960-1	1960-2	Pb2203	Se1960	Sn1899	Sr4215
Units	ppb	ppb	ppb	ppb	ppb	ppb
Avge	5.207	-3.632	-1.706	-.6889	-1.529	.0044
SDev	2.845	.2124	.8566	1.058	2.38	.033
%RSD	54.64	5.847	50.21	153.6	155.6	742.7

Elems	Ti3349	Tl1908	V_2924	Zn2062	Si2881
Units	ppb	ppb	ppb	ppb	ppb
Avge	-.0724	-1.171	-.6510	-.8326	Q21830.
SDev	.1862	1.804	.6563	.4831	2473
%RSD	257.3	154	100.8	58.02	11.33

Method: TRIANGL2 Sample Name: ICSA8 Operator: DKH
Run Time: 10/08/97 06:56 Filename: 100797
Mode: CONC Type: Q Corr. Factor: 1.00000
Lab ID.: Cust. Smpl. ID.: Cust. ID.: 43231

Elems	Ag3280	Al3082	As1890	B_2496	Ba4934	Be3130
Units	ppb	ppb	ppb	ppb	ppb	ppb
Avge	547.0	512400.	534.7	3894.	519.4	513.4
SDev	2.838	3670	6.726	413.9	2.639	5.181
%RSD	.5189	.7162	1.258	10.63	.508	1.009

Elems	Ca3179	Cd2265	Ce4186	Co2286	Cr2677	Cu3247
Units	ppb	ppb	ppb	ppb	ppb	ppb
Avge	449600.	475.8	504.4	485.6	485.3	544.4
SDev	5123	4.729	2.094	4.986	6.809	3.367
%RSD	1.14	.9937	.4152	1.027	1.403	.6184

Elems	Fe2714	K_7664	Li6707	Mg2790	Mn2576	Mo2020
Units	ppb	ppm	ppb	ppb	ppb	ppb
Avge	176900.	Q26.31	643.9	535100.	466.0	504.6
SDev	1634	.0473	1.593	3859	4.417	4.097
%RSD	.9233	.1799	.2474	.7211	.948	.812

Elems	Na3302	Ni2316	P_2149	2203-1	2203-2	Sb2068
Units	ppm	ppb	ppb	ppb	ppb	ppb
Avge	5.784	461.1	542.1	517.7	475.4	542.9
SDev	.1398	5.119	22.66	5.393	14.69	8.218
%RSD	2.417	1.11	4.181	1.042	3.09	1.514

Elems	1960-1	1960-2	Pb2203	Se1960	Sn1899	Sr4215
Units	ppb	ppb	ppb	ppb	ppb	ppb
Avge	577.0	537.7	489.5	550.8	524.2	513.8
SDev	7.764	10.31	9.074	5.076	6.615	2.851
%RSD	1.346	1.917	1.854	.9217	1.262	.555

Elems	Ti3349	Tl1908	V_2924	Zn2062	Si2881
Units	ppb	ppb	ppb	ppb	ppb
Avge	494.5	513.6	506.1	457.1	Q17280.
SDev	3.804	10.16	4.613	8.895	2659
%RSD	.7693	1.978	.9115	1.946	15.39

AutoSampler Report Table: HA466 Thu 10-23-97 01:29:38 PM Page 1

SRB
10/23/97

Table Name: HA466 Autosampler Type: TYPE TJA
Sample Positions: 161/192 QC Positions: 13/19 # Sets: 4
Rinse Station location is rack -1. pos. -1.

--- Racks ---

Rack #	Type	Usage	#Pos Left	Analyses/Pos
1	Aux. (L) Rack	STD/QC/BLANK	13	10
2	Sample (16mm)	Samples	17	1
3	Sample (16mm)	Samples	48	1
4	Sample (16mm)	Samples	48	1
5	Sample (16mm)	Samples	48	1

Ag, Be, Co, Se, ~~Tl~~ only
TL

--- Sample Sets ---

Set#	Type	Prepare?	Description	Method	#Pos	Rack#	StartPos
1	Normal	No	43478	TRIANGL2	11	2	1
2	Normal	No	43692	TRIANGL2	3	2	12
3	Normal	No	43530	TRIANGL2	11	2	15
4	Normal	No	43231	TRIANGL2	6	2	26

--- Preparation Info ---

Set#	Uptake	Uptake#2	Final	Dil.Factor

No Samples Prepared.

Rack #1

Pos	Row	Col	Sample Name	Set #	#Used	Type	
1	1	1	STD3	-NA-	2	Standard	1-62-5P
2	1	2	STD1-BLANK	-NA-	1	Standard	
3	1	3	ICSAB	-NA-	3	QC Standard	1-62-7P
4	1	4	CHECK 1.0	-NA-	1	QC Standard	
5	1	5	ICV/CCV	-NA-	5	QC Standard	1-62-6P
6	1	6	ICB/CCB	-NA-	5	QC Standard	

(7.. 19 Not Used)

SRB
10/23/97

Rack #2

Pos	Row	Col	Sample Name	Set #	#Used	Type
1	1	1	43478 MB	1	-NA-	Sample
2	1	2	43478 LCS	1	-NA-	Sample
3	1	3	185-52-1	1	-NA-	Sample
4	1	4	185-52-1 D	1	-NA-	Sample
5	1	5	185-52-2	1	-NA-	Sample
6	1	6	185-52-2 MS	1	-NA-	Sample
7	1	7	185-52-2 MSD	1	-NA-	Sample
8	1	8	185-52-2 PDS	1	-NA-	Sample
9	1	9	185-52-2 L	1	-NA-	Sample
10	1	10	185-52-3	1	-NA-	Sample
11	1	11	185-52-4	1	-NA-	Sample
12	1	12	CHECK 9972	2	-NA-	Sample

Rack #2

Pos	Row	Col	Sample Name	Set #	#Used	Type
13	2	1	187-68-1	2	-NA-	Sample
14	2	2	187-68-1 D	2	-NA-	Sample
15	2	3	43536 MB	3	-NA-	Sample
16	2	4	43536 LCS	3	-NA-	Sample
17	2	5	186-11-1	3	-NA-	Sample
18	2	6	186-11-1 D	3	-NA-	Sample
19	2	7	186-11-2	3	-NA-	Sample
20	2	8	186-11-2 MS	3	-NA-	Sample
21	2	9	186-11-2 MSD	3	-NA-	Sample
22	2	10	186-11-2 PDS	3	-NA-	Sample
23	2	11	186-11-2 L	3	-NA-	Sample
24	2	12	186-11-3	3	-NA-	Sample
25	3	1	186-11-4	3	-NA-	Sample
26	3	2	184-23-1AB X10	4	-NA-	Sample
27	3	3	184-23-2AB X10	4	-NA-	Sample
28	3	4	184-23-2AB X10 PDS	4	-NA-	Sample
29	3	5	184-23-2AB X10 L	4	-NA-	Sample
30	3	6	184-23-3AB X10	4	-NA-	Sample
31	3	7	184-23-3AB X10 DA	4	-NA-	Sample
(32...	48	Not Used)				

Rack #3

Pos	Row	Col	Sample Name	Set #	#Used	Type
(1...	48	Not Used)				

Rack #4

Pos	Row	Col	Sample Name	Set #	#Used	Type
(1...	48	Not Used)				

Rack #5

Pos	Row	Col	Sample Name	Set #	#Used	Type
(1...	48	Not Used)				

Method: TRIANGL2 Standard: STD1-BLANK

Elem	Ag3280	Al3082	As1890	B_2496	Ba4934	Be3130	Ca3179
Avge	-.0001	.0025	-.0003	.0001	.0000	.0002	.0006
SDev	.0004	.0000	.0000	.0001	.0000	.0000	.0000
%RSD	362.7	.2999	13.71	64.94	53.64	1.422	4.989
#1	.0001	.0025	-.0003	.0000	.0000	.0002	.0005
#2	.0001	.0025	-.0002	.0001	.0001	.0002	.0006
#3	-.0005	.0025	-.0003	.0002	.0001	.0002	.0006

Elem	Cd2265	Ce4186	Co2286	Cr2677	Cu3247	Fe2714	K_7664
Avge	-.0003	-.0002	-.0002	-.0001	.0024	.0000	7.339
SDev	.0001	.0001	.0001	.0001	.0000	.0000	.046
%RSD	38.50	37.20	44.61	57.78	.6536	368.2	.6274
#1	-.0004	-.0003	-.0003	-.0002	.0024	-.0000	7.309
#2	-.0002	-.0002	-.0001	-.0001	.0024	.0000	7.392
#3	-.0003	-.0002	-.0001	-.0001	.0024	.0000	7.315

Elem	Li6707	Mg2790	Mn2576	Mo2020	Na3302	Ni2316	P_2149
Avge	.1492	-.0000	.0000	.0000	.0027	-.0016	-.0008
SDev	.0010	.0001	.0000	.0001	.0038	.0001	.0001
%RSD	.7015	504.7	86.62	177.0	142.5	3.309	15.47
#1	.1483	-.0002	.0000	-.0000	.0048	-.0017	-.0007
#2	.1503	.0001	.0000	.0001	.0050	-.0016	-.0008
#3	.1488	.0000	.0000	.0000	-.0017	-.0016	-.0009

Elem	2203-1	2203-2	Sb2068	1960-1	1960-2	Sn1899	Sr4215
Avge	.0008	-.0001	.0003	-.0043	.0015	-.0003	.0001
SDev	.0008	.0002	.0005	.0005	.0006	.0001	.0000
%RSD	106.2	356.5	158.2	10.55	36.78	29.55	29.14
#1	.0015	-.0003	-.0001	-.0047	.0009	-.0002	.0001
#2	.0009	.0001	.0009	-.0038	.0018	-.0004	.0001
#3	-.0001	.0001	.0002	-.0044	.0019	-.0004	.0001

Elem	Ti3349	Tl1908	V_2924	Zn2062	Si2881
Avge	-.0000	-.0004	-.0004	-.0000	.0221
SDev	.0003	.0001	.0000	.0001	.0004
%RSD	787.1	19.22	8.260	156.1	1.931
#1	-.0003	-.0005	-.0005	-.0001	.0225
#2	.0000	-.0003	-.0004	.0000	.0221
#3	.0002	-.0004	-.0004	-.0000	.0217

IntStd	1	2	3	4	5	6	7
Mode	*Counts	Time	NOTUSED	NOTUSED	NOTUSED	NOTUSED	NOTUSED
Elem	Y	--	--	--	--	--	--
Wavlen	371.030	--	--	--	--	--	--
Avge	236811	15000	--	--	--	--	--
SDev	5390.643	.0000000	--	--	--	--	--
%RSD	2.276352	.0000000	--	--	--	--	--
#1	231267	15000	--	--	--	--	--
#2	237131	15000	--	--	--	--	--
#3	242034	15000	--	--	--	--	--

Method: TRIANGL2 Standard: STD3

Elem	Ag3280	Al3082	As1890	B_2496	Ba4934	Be3130	Ca3179
Avge	.4108	.0177	.0520	.1615	.2846	.2958	.0277
SDev	.0006	.0001	.0001	.0009	.0001	.0014	.0001
%RSD	.1362	.3146	.2072	.5307	.0363	.4699	.5285
#1	.4115	.0177	.0521	.1606	.2848	.2944	.0276
#2	.4107	.0176	.0520	.1619	.2846	.2971	.0279
#3	.4103	.0176	.0519	.1621	.2846	.2960	.0277

Elem	Cd2265	Ce4186	Co2286	Cr2677	Cu3247	Fe2714	K_7664
Avge	1.091	.1183	.1195	.1684	.1699	.0048	24.70
SDev	.005	.0002	.0006	.0008	.0004	.0001	.22
%RSD	.4772	.1608	.5024	.4485	.2404	1.065	.8800
#1	1.086	.1181	.1190	.1677	.1702	.0047	24.92
#2	1.096	.1183	.1202	.1692	.1694	.0048	24.48
#3	1.092	.1185	.1194	.1684	.1699	.0048	24.69

Elem	Li6707	Mg2790	Mn2576	Mo2020	Na3302	Ni2316	P_2149
Avge	14.73	.0223	.1469	.0818	.2056	.3874	.0234
SDev	.20	.0002	.0006	.0002	.0043	.0010	.0005
%RSD	1.348	.7289	.4142	.2392	2.075	.2671	2.031
#1	14.91	.0221	.1462	.0816	.2103	.3865	.0229
#2	14.52	.0224	.1475	.0820	.2042	.3885	.0239
#3	14.76	.0223	.1469	.0819	.2021	.3871	.0233

Elem	2203-1	2203-2	Sb2068	1960-1	1960-2	Sn1899	Sr4215
Avge	.2078	.0983	.1215	.2666	.1598	.1264	.8633
SDev	.0005	.0007	.0003	.0010	.0008	.0009	.0008
%RSD	.2306	.7432	.2893	.3748	.5188	.6798	.0912
#1	.2082	.0975	.1214	.2677	.1589	.1256	.8636
#2	.2080	.0988	.1219	.2665	.1601	.1274	.8640
#3	.2073	.0985	.1213	.2657	.1604	.1263	.8625

Elem	Ti3349	Tl1908	V_2924	Zn2062	Si2881
Avge	1.206	.0334	.0415	.1252	.4776
SDev	.003	.0006	.0001	.0011	.0005
%RSD	.2427	1.650	.3158	.8474	.1094
#1	1.203	.0328	.0413	.1240	.4782
#2	1.208	.0338	.0416	.1261	.4774
#3	1.206	.0336	.0415	.1254	.4773

IntStd	1	2	3	4	5	6	7
Mode	*Counts	Time	NOTUSED	NOTUSED	NOTUSED	NOTUSED	NOTUSED
Elem	Y	--	--	--	--	--	--
Wavlen	371.030	--	--	--	--	--	--
Avge	242234	15000	--	--	--	--	--
SDev	2401.778	.0000000	--	--	--	--	--
%RSD	.9915116	.0000000	--	--	--	--	--
#1	244501	15000	--	--	--	--	--
#2	239717	15000	--	--	--	--	--
#3	242484	15000	--	--	--	--	--

Analysis Report QC Standard Thu 10-23-97 05:21:54 AM page 1

Method: TRIANGL2 Sample Name: STD3 Operator: SRB
Run Time: 10/23/97 05:17:11
Comment:
Mode: CONC Corr. Factor: 1

Elem	Ag3280	Al3082	As1890	B_2496	Ba4934	Be3130	Ca3179
Units	ppb	ppb	ppb	ppb	ppb	ppb	ppb
Avge	995.1	990.4	998.1	1005.	996.7	993.1	994.5
SDev	2.8	6.3	.9	3.	1.3	3.2	3.3
%RSD	2819	.6330	.0942	.3007	.1341	.3272	.3298
#1	998.2	997.7	997.3	1004.	996.1	990.9	992.6
#2	992.7	987.3	997.9	1002.	998.2	991.5	992.6
#3	994.5	986.4	999.2	1008.	995.7	996.8	998.3
Errors	QC Pass	QC Pass	QC Pass	QC Pass	QC Pass	QC Pass	QC Pass
Value	1000.	1000.	1000.	1000.	1000.	1000.	1000.
Range	5.000	5.000	5.000	5.000	5.000	5.000	5.000

Elem	Cd2265	Ce4186	Co2286	Cr2677	Cu3247	Fe2714	K_7664
Units	ppb	ppb	ppb	ppb	ppb	ppb	ppm
Avge	993.6	995.1	995.4	995.0	996.6	1000.	9.900
SDev	3.8	4.0	3.4	3.1	2.2	4.	190
%RSD	.3851	.4026	.3368	.3118	.2201	.4057	1.923
#1	990.9	990.7	992.7	992.8	998.8	996.5	9.766
#2	991.9	995.9	994.4	993.7	996.6	999.9	10.12
#3	998.0	998.5	999.1	998.6	994.4	1005.	9.816
Errors	QC Pass	QC Pass	QC Pass	QC Pass	QC Pass	QC Pass	QC Pass
Value	1000.	1000	1000.	1000.	1000.	1000.	10.00
Range	5.000	5.000	5.000	5.000	5.000	5.000	5.000

Elem	Li6707	Mg2790	Mn2576	Mo2020	Na3302	Ni2316	P_2149
Units	ppb	ppb	ppb	ppb	ppm	ppb	ppb
Avge	997.6	997.2	993.5	996.6	9.840	997.7	998.2
SDev	16.3	4.3	2.7	4.1	.035	2.9	3.5
%RSD	1.638	.4301	.2704	.4162	.3571	.2944	.3471
#1	986.4	995.9	991.0	994.0	9.881	997.5	1001.
#2	1016.	993.7	993.2	994.4	9.818	994.9	994.3
#3	989.9	1002.	996.3	1001.	9.821	1001.	999.5
Errors	QC Pass	QC Pass	QC Pass	QC Pass	QC Pass	QC Pass	QC Pass
Value	1000.	1000.	1000.	1000.	10.00	1000.	1000.
Range	5.000	5.000	5.000	5.000	5.000	5.000	5.000

Elem	2203-1	2203-2	Sb2068	1960-1	1960-2	Pb2203	Se1960
Units	ppb	ppb	ppb	ppb	ppb	ppb	ppb
Avge	994.3	996.7	991.8	996.6	996.6	995.9	996.6
SDev	8.3	6.7	5.1	8.0	6.6	7.1	4.7
%RSD	.8388	.6691	.5156	.8020	.6654	.7139	.4744
#1	991.1	996.9	986.8	988.1	1001.	995.0	996.5
#2	988.0	989.9	991.5	997.9	989.0	989.3	991.9
#3	1004	1003.	997.0	1004	1000	1003.	1001.
Errors	NOCHECK	NOCHECK	QC Pass	NOCHECK	NOCHECK	QC Pass	QC Pass
Value			1000			1000	1000.

Range			5.000			5.000	5.000
Elem	Sn1899	Sr4215	Ti3349	Tl1908	V_2924	Zn2062	Si2881
Units	ppb	ppb	ppb	ppb	ppb	ppb	ppb
Avge	995.8	992.1	993.8	1016.	995.5	997.6	9951.
SDev	3.1	1.3	2.1	5.	2.3	5.9	22.
%RSD	.3085	.1274	.2103	.4806	.2303	.5953	.2193
#1	993.0	990.7	991.5	1010.	993.0	994.3	9974.
#2	995.3	993.2	994.3	1020.	996.3	994.0	9930.
#3	999.1	992.3	995.5	1018.	997.4	1004.	9947.
Errors	QC Pass	QC Pass	QC Pass	QC Pass	QC Pass	QC Pass	QC Pass
Value	1000	1000.	1000.	1000.	1000.	1000.	10000.
Range	5.000	5.000	5.000	5.000	5.000	5.000	5.000
IntStd	1	2	3	4	5	6	7
Mode	*Counts	Time	NOTUSED	NOTUSED	NOTUSED	NOTUSED	NOTUSED
Elem	Y	--	--	--	--	--	--
Wavlen	371.030	--	--	--	--	--	--
Avge	241873	15000	--	--	--	--	--
SDev	3779.456	.0000000	--	--	--	--	--
%RSD	1.562579	.0000000	--	--	--	--	--
#1	239018	15000	--	--	--	--	--
#2	246159	15000	--	--	--	--	--
#3	240442	15000	--	--	--	--	--

Analysis Report QC Standard Thu 10-23-97 05:31:26 AM page 1

Method: TRIANGL2 Sample Name: ICV/CCV Operator: SRB
Run Time: 10/23/97 05:26:45
Comment:
Mode: CONC Corr. Factor: 1

Elem	Ag3280	Al3082	As1890	B_2496	Ba4934	Be3130	Ca3179
Units	ppb	ppb	ppb	ppb	ppb	ppb	ppb
Avge	495.9	482.6	502.7	500.3	496.9	499.0	499.2
SDev	2.0	1.0	1.3	2.7	1.6	.7	1.0
%RSD	.3948	.2019	.2618	.5324	.3247	.1396	.1994
#1	498.1	483.3	502.9	497.3	495.3	498.3	498.1
#2	495.5	482.9	501.3	502.1	498.5	499.6	499.8
#3	494.2	481.5	503.9	501.6	496.8	499.2	499.8
Errors	QC Pass	QC Pass	QC Pass	NOCHECK	QC Pass	QC Pass	QC Pass
Value	500.0	500.0	500.0		500.0	500.0	500.0
Range	10.00	10.00	10.00		10.00	10.00	10.00

Elem	Cd2265	Ce4186	Co2286	Cr2677	Cu3247	Fe2714	K_7664
Units	ppb	ppb	ppb	ppb	ppb	ppb	ppm
Avge	499.8	496.2	499.5	499.8	492.6	505.2	4.748
SDev	.9	2.9	1.0	.9	1.1	6.2	.097
%RSD	.1887	.5881	.2033	.1836	.2196	1.218	2.052
#1	498.7	495.2	498.5	498.8	492.4	498.1	4.636
#2	500.3	493.9	500.2	500.6	493.7	508.8	4.803
#3	500.4	499.5	499.9	500.0	491.6	508.8	4.806
Errors	QC Pass	NOCHECK	QC Pass	QC Pass	QC Pass	QC Pass	QC Pass
Value	500.0		500.0	500.0	500.0	500.0	5.000
Range	10.00		10.00	10.00	10.00	10.00	10.00

Elem	Li6707	Mg2790	Mn2576	Mo2020	Na3302	Ni2316	P_2149
Units	ppb	ppb	ppb	ppb	ppm	ppb	ppb
Avge	482.5	497.0	498.4	497.6	4.790	501.0	499.8
SDev	8.8	4.2	1.0	.7	.202	1.8	2.8
%RSD	1.815	.8448	.2056	.1502	4.215	.3620	.5549
#1	472.6	495.3	497.2	496.8	5.020	500.3	497.9
#2	489.1	493.9	499.1	498.3	4.642	499.7	503.0
#3	485.9	501.8	498.8	497.6	4.708	503.1	498.6
Errors	QC Pass	QC Pass	QC Pass	QC Pass	QC Pass	QC Pass	QC Pass
Value	500.0	500.0	500.0	500.0	5.000	500.0	500.0
Range	10.00	10.00	10.00	10.00	10.00	10.00	10.00

Elem	2203-1	2203-2	Sb2068	1960-1	1960-2	Pb2203	Se1960
Units	ppb	ppb	ppb	ppb	ppb	ppb	ppb
Avge	501.5	498.4	495.3	504.8	497.2	499.4	499.7
SDev	6.9	6.6	.7	4.2	8.1	6.6	6.7
%RSD	1.384	1.331	.1330	.8374	1.621	1.327	1.348
#1	507.3	501.6	495.4	507.2	503.9	503.5	505.0
#2	493.8	490.7	495.8	499.9	488.3	491.7	492.2
#3	503.3	502.7	494.5	507.3	499.4	502.9	502.0
Errors	NOCHECK	NOCHECK	QC Pass	NOCHECK	NOCHECK	QC Pass	QC Pass
Value			500.0			500.0	500.0

Range			10.00			10.00	10.00
Elem	Sn1899	Sr4215	Ti3349	Tl1908	V_2924	Zn2062	Si2881
Units	ppb	ppb	ppb	ppb	ppb	ppb	ppb
Avge	495.4	494.0	495.2	506.1	497.8	500.5	4973.
SDev	1.0	1.4	1.1	6.5	1.3	.5	8.
%RSD	.2080	.2900	.2149	1.282	.2534	.1092	.1631
#1	494.2	492.8	494.1	499.5	496.9	499.9	4977.
#2	496.1	495.6	496.2	506.3	499.2	501.0	4978.
#3	495.9	493.7	495.2	512.5	497.3	500.6	4963.
Errors	QC Pass	QC Pass	QC Pass	QC Pass	QC Pass	QC Pass	QC Pass
Value	500.0	500.0	500.0	500.0	500.0	500.0	5000.
Range	10.00	10.00	10.00	10.00	10.00	10.00	10.00
IntStd	1	2	3	4	5	6	7
Mode	*Counts	Time	NOTUSED	NOTUSED	NOTUSED	NOTUSED	NOTUSED
Elem	Y	--	--	--	--	--	--
Wavlen	371.030	--	--	--	--	--	--
Avge	241394	15000	--	--	--	--	--
SDev	3588.702	.0000000	--	--	--	--	--
%RSD	1.486655	.0000000	--	--	--	--	--
#1	237275	15000	--	--	--	--	--
#2	243844	15000	--	--	--	--	--
#3	243064	15000	--	--	--	--	--

Analysis Report QC Standard Thu 10-23-97 05:36:13 AM page 1

Method: TRIANGL2 Sample Name: ICB/CCB Operator: SRB
Run Time: 10/23/97 05:31:31
Comment:
Mode: CONC Corr. Factor: 1

Elem	Ag3280	Al3082	As1890	B_2496	Ba4934	Be3130	Ca3179
Units	ppb	ppb	ppb	ppb	ppb	ppb	ppb
Avge	.9030	2.453	-.0439	8.734	.0301	-.0055	.1156
SDev	.7566	6.365	1.8488	1.929	.0378	.0543	.5618
%RSD	83.78	259.4	4212.	22.08	125.8	987.0	486.1
#1	.7556	9.798	1.061	10.96	.0641	.0515	.4024
#2	Q1.722	-.9939	-2.178	7.583	-.0106	-.0115	-.5317
#3	.2310	-1.444	.9858	7.657	.0367	-.0565	.4760
Errors	QC Pass	QC Pass	QC Pass	NOCHECK	QC Pass	QC Pass	QC Pass
Value	.0000	.0000	.0000		.0000	.0000	.0000
Range	1.000	50.00	5.000		3.000	1.000	60.00

Elem	Cd2265	Ce4186	Co2286	Cr2677	Cu3247	Fe2714	K_7664
Units	ppb	ppb	ppb	ppb	ppb	ppb	ppm
Avge	.0521	-2.307	.2531	.1482	-.0510	2.734	.1014
SDev	.1788	3.389	.6583	.6715	.4590	10.20	.0486
%RSD	343.1	146.9	260.1	453.3	899.7	372.9	47.97
#1	.2013	Q-5.030	.9193	.7493	.4723	7.054	.0506
#2	-.1461	Q-3.380	-.3970	-.5766	-.3856	-8.910	.1060
#3	.1012	1.489	.2370	.2717	-.2397	10.06	.1476
Errors	QC Pass	QC Pass	QC Pass	QC Pass	QC Pass	QC Pass	QC Pass
Value	.0000	.0000	.0000	.0000	.0000	.0000	.0000
Range	1.000	3.000	1.000	2.000	2.000	40.00	220.0

Elem	Li6707	Mg2790	Mn2576	Mo2020	Na3302	Ni2316	P_2149
Units	ppb	ppb	ppb	ppb	ppm	ppb	ppb
Avge	.2576	.8626	.0656	.2523	.1917	.2132	-1.899
SDev	.1170	2.861	.0358	.5660	.2457	.9296	5.444
%RSD	45.41	331.7	54.60	224.4	128.2	436.0	286.7
#1	.1357	4.036	.0436	.8936	.2684	1.083	-1.167
#2	.2683	-1.519	.0463	.0408	.3900	-.7663	-7.672
#3	.3689	.0708	.1070	-.1776	-.0833	.3227	3.142
Errors	QC Pass	QC Pass	QC Pass	QC Pass	QC Pass	QC Pass	QC Pass
Value	.0000	.0000	.0000	.0000	.0000	.0000	.0000
Range	1.000	30.00	2.000	2.000	300.0	3.000	30.00

Elem	2203-1	2203-2	Sb2068	1960-1	1960-2	Pb2203	Se1960
Units	ppb	ppb	ppb	ppb	ppb	ppb	ppb
Avge	5.677	-2.328	.9918	1.431	-.6081	.3375	.0711
SDev	1.999	2.879	1.725	2.634	4.0905	1.515	2.469
%RSD	35.22	123.7	173.9	184.0	672.7	448.9	3475.
#1	5.136	-4.018	2.911	3.525	1.026	-.9698	1.858
#2	7.892	-3.963	-.4296	2.295	-5.263	-.0156	-2.746
#3	4.004	.9963	.4942	-1.526	2.413	1.998	1.101
Errors	NOCHECK	NOCHECK	QC Pass	NOCHECK	NOCHECK	QC Pass	QC Pass
Value			.0000			.0000	.0000

T1 failed
SRB
10/23/97

Range			4.000			2.000	3.000
Elem	Sn1899	Sr4215	Ti3349	Tl1908	V_2924	Zn2062	Si2881
Units	ppb	ppb	ppb	ppb	ppb	ppb	ppb
Avge	-.6974	.0328	.0114	Q10.18	.3972	.2472	29.00
SDev	1.5935	.0272	.0802	4.15	.1084	.1436	5.22
%RSD	228.5	83.03	702.3	40.81	27.28	58.09	18.00
#1	.4910	.0586	.0714	Q14.96	.4412	.2709	23.28
#2	-2.508	.0043	-.0797	Q8.120	.2738	.0933	30.21
#3	-.0751	.0355	.0426	Q7.456	.4766	.3776	33.50
Errors	QC Pass	QC Pass	QC Pass	QC Fail	QC Pass	QC Pass	QC Pass
Value	.0000	.0000	.0000	.0000	.0000	.0000	.0000
Range	13.00	1.000	8.000	5.000	2.000	12.00	120.0
IntStd	1	2	3	4	5	6	7
Mode	*Counts	Time	NOTUSED	NOTUSED	NOTUSED	NOTUSED	NOTUSED
Elem	Y	--	--	--	--	--	--
Wavlen	371.030	--	--	--	--	--	--
Avge	224779	15000	--	--	--	--	--
SDev	2341.124	.0000000	--	--	--	--	--
%RSD	1.041523	.0000000	--	--	--	--	--
#1	227480	15000	--	--	--	--	--
#2	223525	15000	--	--	--	--	--
#3	223332	15000	--	--	--	--	--

Analysis Report QC Standard Thu 10-23-97 05:42:19 AM page 1

Method: TRIANGL2 Sample Name: ICB/CCB Operator: SRB
Run Time: 10/23/97 05:37:37
Comment:
Mode: CONC Corr. Factor: 1

Elem	Ag3280	Al3082	As1890	B_2496	Ba4934	Be3130	Ca3179
Units	ppb	ppb	ppb	ppb	ppb	ppb	ppb
Avge	.1507	4.914	1.424	4.036	.1154	.0009	.4219
SDev	.4383	.824	1.092	.508	.0848	.0103	1.066
%RSD	290.9	16.77	76.66	12.58	73.41	1189.	252.7
#1	.6169	4.479	.2400	3.465	.0231	.0128	-.7535
#2	.0880	4.399	1.642	4.210	.1335	-.0056	1.326
#3	-.2529	5.865	2.391	4.435	.1897	-.0045	.6929
Errors	QC Pass	QC Pass	QC Pass	NOCHECK	QC Pass	QC Pass	QC Pass
Value	.0000	.0000	.0000		.0000	.0000	.0000
Range	1.000	50.00	5.000		2.000	1.000	60.00

Elem	Cd2265	Ce4186	Co2286	Cr2677	Cu3247	Fe2714	K_7664
Units	ppb	ppb	ppb	ppb	ppb	ppb	ppm
Avge	.1092	.6122	.4570	.4543	.3250	11.68	.1355
SDev	.0804	2.516	.2725	.3563	.2273	5.81	.0203
%RSD	73.60	411.0	59.63	78.41	69.95	49.75	15.01
#1	.0997	-2.267	.1468	.0504	.2100	5.412	.1217
#2	.1939	1.713	.5665	.5889	.1781	16.89	.1589
#3	.0340	2.391	.6577	.7236	.5868	12.75	.1259
Errors	QC Pass	QC Pass	QC Pass	QC Pass	QC Pass	QC Pass	QC Pass
Value	.0000	.0000	.0000	.0000	.0000	.0000	.0000
Range	1.000	3.000	1.000	2.000	2.000	40.00	220.0

Elem	Li6707	Mg2790	Mn2576	Mo2020	Na3302	Ni2316	P_2149
Units	ppb	ppb	ppb	ppb	ppm	ppb	ppb
Avge	.3140	5.600	.1072	-.0131	.0142	.4814	-1.857
SDev	.0515	5.725	.0027	.4898	.1449	.8236	4.051
%RSD	16.41	102.2	2.497	3739.	1018.	171.1	218.2
#1	.2820	-.9574	.1094	.3783	.1534	-.1343	-5.068
#2	.3735	8.156	.1080	-.5623	.0252	.1616	2.695
#3	.2866	9.601	.1042	.1447	-.1358	1.417	-3.197
Errors	QC Pass	QC Pass	QC Pass	QC Pass	QC Pass	QC Pass	QC Pass
Value	.0000	.0000	.0000	.0000	.0000	.0000	.0000
Range	1.000	30.00	2.000	2.000	300.0	3.000	30.00

Elem	2203-1	2203-2	Sb2068	1960-1	1960-2	Pb2203	Se1960
Units	ppb	ppb	ppb	ppb	ppb	ppb	ppb
Avge	.5765	.4698	.8321	-1.029	1.989	.5054	.9838
SDev	3.617	1.403	1.932	1.934	.620	.3224	.3818
%RSD	627.5	298.6	232.2	188.0	31.16	63.79	38.81
#1	4.647	-1.026	-.1039	.6933	1.789	.8631	1.424
#2	-.6474	.6792	-.4538	-.6576	1.493	.2374	.7768
#3	-2.270	1.756	3.054	-3.122	2.683	.4155	.7502
Errors	NOCHECK	NOCHECK	QC Pass	NOCHECK	NOCHECK	QC Pass	QC Pass
Value			.0000			.0000	.0000

Range			4.000			2.000	3.000
Elem	Sn1899	Sr4215	Ti3349	Tl1908	V_2924	Zn2062	Si2881
Units	ppb	ppb	ppb	ppb	ppb	ppb	ppb
Avge	-.6483	.0477	.1382	4.590	.5555	.5456	36.94
SDev	1.3390	.0419	.1569	2.597	.3886	.0935	7.20
%RSD	206.5	87.76	113.6	56.58	69.95	17.14	19.48
#1	.6089	.0004	-.0249	1.626	.1421	.6327	42.01
#2	-2.056	.0627	.1513	Q5.679	.6113	.5573	40.10
#3	-.4975	.0800	.2881	Q6.466	.9132	.4467	28.70
Errors	QC Pass	QC Pass	QC Pass	QC Pass	QC Pass	QC Pass	QC Pass
Value	.0000	.0000	.0000	.0000	.0000	.0000	.0000
Range	15.00	1.000	8.000	5.000	2.000	12.00	120.0
IntStd	1	2	3	4	5	6	7
Mode	*Counts	Time	NOTUSED	NOTUSED	NOTUSED	NOTUSED	NOTUSED
Elem	Y	--	--	--	--	--	--
Wavlen	371.030	--	--	--	--	--	--
Avge	222717	15000	--	--	--	--	--
SDev	3002.896	.0000000	--	--	--	--	--
%RSD	1.348303	.0000000	--	--	--	--	--
#1	220558	15000	--	--	--	--	--
#2	221446	15000	--	--	--	--	--
#3	226146	15000	--	--	--	--	--

Method: TRIANGL2 Sample Name: ICSAB Operator: SRB
Run Time: 10/23/97 05:42:23
Comment:
Mode: CONC Corr. Factor: 1

Elem	Ag3280	Al3082	As1890	B_2496	Ba4934	Be3130	Ca3179
Units	ppb	ppb	ppb	ppb	ppb	ppb	ppb
Avge	529.1	519600.	518.4	516.0	506.3	490.0	472900.
SDev	3.7	5308.	2.0	3.1	3.3	1.4	1345.
%RSD	.6905	1.022	.3826	.6060	.6436	.2813	.2844
#1	533.3	525600.	519.9	518.8	510.1	491.1	474400.
#2	527.1	517700.	516.2	512.6	504.5	488.4	471700.
#3	526.9	515500.	519.2	516.6	504.4	490.3	472700.
Errors	QC Pass	QC Pass	QC Pass	NOCHECK	QC Pass	QC Pass	QC Pass
Value	500.0	500000.	500.0		500.0	500.0	500000.
Range	20.00	20.00	20.00		20.00	20.00	20.00

Elem	Cd2265	Ce4186	Co2286	Cr2677	Cu3247	Fe2714	K_7664
Units	ppb	ppb	ppb	ppb	ppb	ppb	ppm
Avge	466.8	489.2	464.1	477.1	508.9	177000.	22.69
SDev	1.2	3.0	1.2	1.1	6.4	739.	.12
%RSD	.2516	.6232	.2662	.2335	1.254	.4177	.5469
#1	468.1	492.0	465.4	478.2	516.1	177800.	22.82
#2	465.9	486.0	463.0	476.0	506.3	176400.	22.67
#3	466.2	489.4	463.7	476.9	504.1	176800.	22.58
Errors	QC Pass	NOCHECK	QC Pass	QC Pass	QC Pass	QC Pass	QC Pass
Value	500.0		500.0	500.0	500.0	200000.	19.00
Range	20.00		20.00	20.00	20.00	20.00	20.00

Elem	Li6707	Mg2790	Mn2576	Mo2020	Na3302	Ni2316	P_2149
Units	ppb	ppb	ppb	ppb	ppm	ppb	ppb
Avge	539.0	546600.	451.4	496.8	5.029	453.0	482.5
SDev	3.2	2558.	1.9	1.9	.132	.9	20.5
%RSD	.6008	.4680	.4101	.3786	2.619	.2039	4.248
#1	542.5	549500.	453.4	498.4	5.175	453.4	481.3
#2	538.5	544700.	449.7	494.8	4.994	452.0	462.7
#3	536.1	545500.	451.2	497.3	4.918	453.7	503.6
Errors	NOCHECK	QC Pass	QC Pass	QC Pass	QC Pass	QC Pass	QC Pass
Value		500000.	500.0	500.0	5.000	500.0	500.0
Range		20.00	20.00	20.00	20.00	20.00	20.00

Elem	2203-1	2203-2	Sb2068	1960-1	1960-2	Pb2203	Se1960
Units	ppb	ppb	ppb	ppb	ppb	ppb	ppb
Avge	536.8	453.9	506.2	538.0	513.6	481.5	521.7
SDev	12.9	9.7	3.2	17.4	6.2	2.2	4.7
%RSD	2.395	2.138	.6304	3.239	1.216	.4564	.8988
#1	531.6	457.4	506.5	536.1	519.8	482.1	525.2
#2	551.4	442.9	502.8	556.3	507.3	479.0	523.6
#3	527.3	461.3	509.1	521.6	513.8	483.3	516.4
Errors	NOCHECK	NOCHECK	QC Pass	NOCHECK	NOCHECK	QC Pass	QC Pass
Value			500.0			500.0	500.0

Range			20.00			20.00	20.00
Elem	Sn1899	Sr4215	Ti3349	Tl1908	V_2924	Zn2062	Si2881
Units	ppb	ppb	ppb	ppb	ppb	ppb	ppb
Avge	498.7	497.7	490.7	511.5	489.5	450.2	5478.
SDev	3.6	2.9	2.4	1.0	2.5	1.2	40.
%RSD	.7251	.5910	.4852	.1908	.5104	.2771	.7256
#1	502.6	501.1	493.3	510.5	492.3	450.0	5524.
#2	495.5	495.8	488.6	512.5	487.4	449.0	5459.
#3	498.0	496.2	490.1	511.5	489.0	451.5	5452.
Errors	QC Pass	QC Pass	QC Pass	QC Pass	QC Pass	QC Pass	QC Pass
Value	500.0	500.0	500.0	500.0	500.0	500.0	5000.
Range	20.00	20.00	20.00	20.00	20.00	20.00	20.00
IntStd	1	2	3	4	5	6	7
Mode	*Counts	Time	NOTUSED	NOTUSED	NOTUSED	NOTUSED	NOTUSED
Elem	Y	--	--	--	--	--	--
Wavlen	371.030	--	--	--	--	--	--
Avge	203737	15000	--	--	--	--	--
SDev	815.1399	.0000000	--	--	--	--	--
%RSD	.4000942	.0000000	--	--	--	--	--
#1	203796	15000	--	--	--	--	--
#2	204226	15000	--	--	--	--	--
#3	204189	15000	--	--	--	--	--

Analysis Report Averages Thu 10-23-97 02:50:12 PM page 1

Method: TRIANGL2 Sample Name: 184-23-1A8 Y10 Operator: SRR
Run Time: 10/23/97 13:47 Filename: 102397
Mode: CONC Type: S Corr. Factor: 1.00000
Lab ID.: Cust. Smpl. ID.: Cust. ID.: 43231

Elems	Ag3280	Be3130	Co2286	Se1960	Tl1908
Units	ppb	ppb	ppb	ppb	ppb
Avge	12.92	2.981	34.15	70.98	72.82
SDev	.3344	.1794	1.33	1.68	6.487
%RSD	2.588	6.018	3.895	2.367	8.909

Method: TRIANGL2 Sample Name: 184-23-2A8 X10 Operator: SR8
Run Time: 10/23/97 13:52 Filename: 102397
Mode: CONC Type: S Corr. Factor: 1.00000
Lab ID.: Cust. Smpl. ID.: Cust. ID.: 43231

Elems	As3280	Be3130	Co2286	Se1960	Tl1908
Units	ppb	ppb	ppb	ppb	ppb
Avge	50.28	15.17	42.98	127.4	167.7
Stdev	.387	.0752	.6077	1.792	5.6
%RSD	.7697	.4954	1.414	1.407	3.34

Method: TRIANGL2 Sample Name: 184-23-2AB X10 PDS Operator: SRB
Run Time: 10/23/97 13:57 Filename: 102397
Mode: CONC Type: S Corr. Factor: 1.00000
Lab ID.: Cust. Smpl. ID.: Cust. ID.: 43231

Elems	Ag3280	Ba3130	Co2286	Se1960	Tl1908
Units	ppb	ppb	ppb	ppb	ppb
Avge	87.50	58.87	87.37	173.1	214.2
SDev	.2254	.1733	.7723	1.258	8.937
%RSD	.2576	.2944	.884	.7271	4.171

Method: TRIANGL2 Sample Name: 184-23-2AB X10 L Operator: SRB
Run Time: 10/23/97 14:02 Filename: 102397
Mode: CONC Type: S Corr. Factor: 1.00000
Lab ID.: Cust. Smpl. ID.: Cust. ID.: 43231

Elems	Ag3280	Be3130	Co2286	Se1960	Tl1908
Units	ppb	ppb	ppb	ppb	ppb
Avge	8.408	3.464	9.450	25.07	35.64
SDev	.3713	.0213	.1277	1.595	4.383
%RSD	4.416	.6149	1.352	6.363	12.3

Method: TRIANGL2 Sample Name: 184-23-3AB X10 Operator: SRB
Run Time: 10/23/97 14:08 Filename: 102397
Mode: CONC Type: S Corr. Factor: 1.00000
Lab ID.: Cust. Smpl. ID.: Cust. ID.: 43231

Elems	Ag3280	Be3130	Co2286	Se1960	Tl1908
Units	ppb	ppb	ppb	ppb	ppb
Avge	18.90	9.108	47.27	115.6	130.5
SDev	.4456	.0112	.4996	2.65	7.523
%RSD	2.358	.1231	1.057	2.293	5.749

Method: TRIANGL2 Sample Name: 184-23-3AB X10 DA Operator: SRB
Run Time: 10/23/97 14:13 Filename: 102397
Mode: CONC Type: S Corr. Factor: 1.00000
Lab ID.: Cust. Smpl. ID.: Cust. ID.: 43231

Elems	Ag3280	Be3130	Co2286	Se1960	Tl1908
Units	ppb	ppb	ppb	ppb	ppb
Avge	18.88	9.051	47.70	116.1	139.2
SDev	.1989	.0407	.6765	1.191	4.259
%RSD	2.642	.4494	1.418	1.025	3.06

Method: TRIANGL2 Sample Name: ICV/CCV Operator: SRB
Run Time: 10/23/97 14:18 Filename: 102397
Mode: CONC Type: Q Corr. Factor: 1.00000
Lab ID.: Cust. Smpl. ID.: Cust. ID.: 43231

Elems	Ag3280	Al3082	As1890	B_2496	Ba4934	Be3130
Units	ppb	ppb	ppb	ppb	ppb	ppb
Avge	503.1	Q567.9	512.8	610.5	502.1	506.9
SDev	3.32	65.94	6.248	12.97	1.408	1.346
%RSD	.66	11.61	1.218	2.125	.2805	.2655

Elems	Ca3179	Cd2265	Ce4186	Co2286	Cr2677	Cu3247
Units	ppb	ppb	ppb	ppb	ppb	ppb
Avge	Q860.3	511.0	507.0	505.5	510.2	506.6
SDev	607.4	6.092	8.151	2.48	4.824	6.222
%RSD	70.6	1.192	1.608	.4905	.9456	1.228

Elems	Fe2714	K_7664	Li6707	Mg2790	Mn2576	Mo2020
Units	ppb	ppm	ppb	ppb	ppb	ppb
Avge	Q997.0	4.548	469.7	Q937.5	Q649.3	504.6
SDev	804.5	.1051	3.841	737.1	269.3	3.917
%RSD	80.69	2.311	.8179	78.62	41.47	.7763

Elems	Na3302	Ni2316	P_2149	2203-1	2203-2	Sb2068
Units	ppm	ppb	ppb	ppb	ppb	ppb
Avge	4.965	510.1	Q573.7	665.6	532.7	505.4
SDev	.51	3.816	104.9	143.6	9.081	4.52
%RSD	10.27	.748	18.29	21.57	1.705	.8942

Elems	1960-1	1960-2	Pb2203	Se1960	Sn1899	Sr4215
Units	ppb	ppb	ppb	ppb	ppb	ppb
Avge	503.9	514.7	Q577.0	511.1	495.2	500.0
SDev	12.03	9.312	50.74	10.12	23.44	1.306
%RSD	2.387	1.809	8.794	1.979	4.734	.2613

Elems	Ti3349	Tl1908	V_2924	Zn2062	Si2881
Units	ppb	ppb	ppb	ppb	ppb
Avge	502.1	500.6	505.3	Q1247.	Q9148.
SDev	6.419	8.822	1.348	1254	428.6
%RSD	1.278	1.762	.2668	100.5	4.685

Method: TRIANGL2 Sample Name: IC8/CCB Operator: SRB
Run Time: 10/23/97 14:24 Filename: 102397
Mode: CONC Type: Q Corr. Factor: 1.00000
Lab ID.: Cust. Smpl. ID.: Cust. ID.: 43231

Elems	Ag3280	Al3082	As1890	B_2496	Ba4934	Be3130
Units	ppb	ppb	ppb	ppb	ppb	ppb
Avge	.9285	Q74.76	3.028	53.81	1.973	.6367
SDev	.221	40.46	2.429	10.4	3.112	.6716
%RSD	23.8	54.11	80.22	19.33	157.8	105.5

Elems	Ca3179	Cd2265	Ce4186	Co2286	Cr2677	Cu3247
Units	ppb	ppb	ppb	ppb	ppb	ppb
Avge	Q203.1	Q2.463	Q5.986	Q1.418	Q2.445	Q5.365
SDev	353.5	3.935	4.681	.803	3.171	6.898
%RSD	174.1	159.7	78.19	56.64	129.7	128.6

Elems	Fe2714	K 7664	Li6707	Mg2790	Mn2576	Mo2020
Units	ppb	ppm	ppb	ppb	ppb	ppb
Avge	Q296.7	Q438	8018	Q251.3	Q93.65	1.487
SDev	472.3	.0771	.907	417.1	160.6	1.18
%RSD	159.2	176.2	113.1	166	171.5	79.35

Elems	Na3302	Ni2316	P_2149	2203-1	2203-2	Sb2068
Units	ppm	ppb	ppb	ppb	ppb	ppb
Avge	.2454	1.682	Q42.63	3.052	4.554	Q4.814
SDev	.1572	2.293	71.22	3.577	1.201	1.814
%RSD	64.08	136.3	167.1	117.2	26.37	37.68

Elems	1960-1	1960-2	Pb2203	Se1960	Sn1899	Sr4215
Units	ppb	ppb	ppb	ppb	ppb	ppb
Avge	-1.787	-.3261	Q4.054	-.8126	9.120	Q1.469
SDev	1.788	2.63	.5562	1.75	13.6	2.377
%RSD	100	806.3	13.72	215.4	149.1	161.8

Elems	Ti3349	Tl1908	V_2924	Zn2062	Si2881
Units	ppb	ppb	ppb	ppb	ppb
Avge	3.049	Q6.327	1.940	Q445.7	Q1082
SDev	4.672	2.674	2.005	747	268.6
%RSD	153.2	42.26	103.3	167.6	24.82

Co & Tl failed
SRB 10/23/97

Method: TRIANGL2 Sample Name: ICB/CCB Operator: SRB
Run Time: 10/23/97 14:37 Filename: 102397
Mode: CONC Type: Q Corr. Factor: 1.00000
Lab ID.: Cust. Smpl. ID.: Cust. ID.: 43231

Elems	Ag3280	Al3082	As1890	B_2496	Ba4934	Be3130
Units	ppb	ppb	ppb	ppb	ppb	ppb
Avge	.4389	43.83	.0183	19.21	-.0100	.2310
SDev	.9499	3.268	.2873	1.032	.0866	.0245
%RSD	216.4	7.455	1566	5.374	863.1	10.58

Elems	Ca3179	Cd2265	Ce4186	Co2286	Cr2677	Cu3247
Units	ppb	ppb	ppb	ppb	ppb	ppb
Avge	-4.089	.0835	-1.043	-.4362	.0423	.1351
SDev	1.061	.2364	2.254	.2649	.3302	.1037
%RSD	25.96	283	216.1	60.72	781.2	76.73

Elems	Fe2714	K_7664	Li6707	Mg2790	Mn2576	Mo2020
Units	ppb	ppm	ppb	ppb	ppb	ppb
Avge	-.4611	-.1330	-.0488	-.0074	.1230	.1686
SDev	9.309	.0685	.1492	3.584	.0502	.1867
%RSD	2019	51.5	305.8	48610	40.81	110.7

Elems	Na3302	Ni2316	P_2149	2203-1	2203-2	Sb2068
Units	ppm	ppb	ppb	ppb	ppb	ppb
Avge	.1424	2910	-4.580	3.347	-.5649	-1.137
SDev	.2746	7474	1.824	3.745	3.503	.1336
%RSD	192.8	256.8	39.84	111.9	620	11.75

Elems	1960-1	1960-2	Pb2203	Se1960	Sn1899	Sr4215
Units	ppb	ppb	ppb	ppb	ppb	ppb
Avge	1.782	-.0562	.7379	.5559	-.2662	.0011
SDev	2.798	1.641	1.157	1.245	.5838	.0411
%RSD	157	2921	156.8	223.9	219.3	3584

Elems	Ti3349	Tl1908	V_2924	Zn2062	Si2881
Units	ppb	ppb	ppb	ppb	ppb
Avge	-.0375	1.390	.4379	5.658	80.77
SDev	.1032	3.249	.381	.3572	6.595
%RSD	275.3	233.7	87	6.313	8.166

Method: TRIANGL2 Sample Name: ICSAB Operator: SRB
Run Time: 10/23/97 14:42 Filename: 102397
Mode: CONC Type: Q Corr. Factor: 1.00000
Lab ID.: Cust. Smpl. ID.: Cust. ID.: 43231

Elems	Ag3280	Al3082	As1890	B_2496	Ba4934	Be3130
Units	ppb	ppb	ppb	ppb	ppb	ppb
Avge	531.0	522300	519.8	540.5	509.3	485.4
SDev	1.299	2609	6.881	4.63	2.651	4.253
%RSD	.2447	.4995	1.324	.8566	.5204	.8763

Elems	Ca3179	Cd2265	Ce4186	Co2286	Cr2677	Cu3247
Units	ppb	ppb	ppb	ppb	ppb	ppb
Avge	464800.	465.0	489.8	459.7	473.5	519.9
SDev	6230	4.763	3.428	4.27	4.85	6.066
%RSD	1.34	1.024	.7	.9289	1.024	1.167

Elems	Fe2714	K_7664	Li6707	Mg2790	Mn2576	Mo2020
Units	ppb	ppm	ppb	ppb	ppb	ppb
Avge	176500.	824.12	582.5	545000.	438.1	494.7
SDev	1422	1.588	33.65	3762	3.381	2.868
%RSD	.8059	6.585	5.777	.6902	.7718	.5797

Elems	Na3302	Ni2316	P_2149	2203-1	2203-2	Sb2068
Units	ppm	ppb	ppb	ppb	ppb	ppb
Avge	5.259	452.0	498.6	504.0	469.9	505.0
SDev	.2935	4.64	28.68	13.33	11.84	10.08
%RSD	5.581	1.026	5.751	2.644	2.519	1.995

Elems	1960-1	1960-2	Pb2203	Se1960	Sn1899	Sr4215
Units	ppb	ppb	ppb	ppb	ppb	ppb
Avge	522.6	531.7	481.3	528.7	474.7	502.6
SDev	28.51	11.67	4.477	1.712	4.421	1.229
%RSD	5.456	2.195	.9303	.3238	.9314	.2445

Elems	Ti3349	Tl1908	V_2924	Zn2062	Si2881
Units	ppb	ppb	ppb	ppb	ppb
Avge	489.8	502.5	489.2	423.7	5650.
SDev	1.767	16.41	3.043	7.391	23.98
%RSD	.3608	3.266	.6222	1.744	.4244

DKH 10/30/97

Table Name: H8470 Autosampler Type: TYPE TJA
Sample Positions: 153/192 QC Positions: 13/19 # Sets: 5
Rinse Station location is rack -1. pos. -1.

--- Racks ---

Rack #	Type	Usage	#Pos Left	Analyses/Pos
1	Any (L) Rack	STD/QC/BLANK	13	10
2	Sample (16mm)	Samples	9	1
3	Sample (16mm)	Samples	48	1
4	Sample (16mm)	Samples	48	1
5	Sample (16mm)	Samples	48	1

--- Sample Sets ---

Set#	Type	Prepare?	Description	Method	#Pos	Rack#	StartPos
1	Normal	No	43603	TRIANGL2	4	2	1
2	Normal	No	43231	TRIANGL2	2	2	3
3	Normal	No	43630	TRIANGL2	11	2	7
4	Normal	No	43615R	TRIANGL2	11	2	18
5	Normal	No	43641	TRIANGL2	11	2	29

--- Preparation Info ---

Set#	Uptake	Uptake#2	Final	Dil Factor

No Samples Prepared.

Rack #1

Pos	Row	Col	Sample Name	Set #	#Used	Type
1	1	1	STD3	-NA-	2	Standard 1-62-8 P
2	1	2	STD1-BLANK	-NA-	1	Standard
3	1	3	ICSAB	-NA-	5	QC Standard 1-62-10 P
4	1	4	CHECK LO	-NA-	1	QC Standard
5	1	5	ICV/CCV	-NA-	8	QC Standard 1-62-9 P
6	1	6	ICB/CCB	-NA-	8	QC Standard

(7...19 Not Used)

DKH 10/30/97

Rack #2

Pos	Row	Col	Sample Name	Set #	#Used	Type
1	1	1	43603 MB	1	-NA-	Sample
2	1	2	43603 LCS	1	-NA-	Sample
3	1	3	184-23-2AB X200	2	-NA-	Sample
4	1	4	187-23-2AB X200 POS	2	-NA-	Sample
5	1	5	187-32-1 X100	1	-NA-	Sample
6	1	6	187-32-1 X100 POS	1	-NA-	Sample
7	1	7	43630 MB	3	-NA-	Sample
8	1	8	43630 LCS	3	-NA-	Sample
9	1	9	187-6-1	3	-NA-	Sample
10	1	10	187-6-1 D	3	-NA-	Sample
11	1	11	187-6-2	3	-NA-	Sample

Rack #2

Pos	Row	Col	Sample Name	Set #	#Used	Type
12	1	12	187-6-2 MS	3	-NA-	Sample
13	2	1	187-6-2 MSD	3	-NA-	Sample
14	2	2	187-6-2 PDS	3	-NA-	Sample
15	2	3	187-6-2 L	3	-NA-	Sample
16	2	4	187-6-3	3	-NA-	Sample
17	2	5	187-6-4	3	-NA-	Sample
18	2	6	436158 MB	4	-NA-	Sample
19	2	7	436158 LCS	4	-NA-	Sample
20	2	8	186-90-1	4	-NA-	Sample
21	2	9	186-90-1 D	4	-NA-	Sample
22	2	10	186-90-2	4	-NA-	Sample
23	2	11	186-90-2 MS	4	-NA-	Sample
24	2	12	186-90-2 MSD	4	-NA-	Sample
25	3	1	186-90-2 PDS	4	-NA-	Sample
26	3	2	186-90-2 L	4	-NA-	Sample
27	3	3	186-90-3	4	-NA-	Sample
28	3	4	186-90-4	4	-NA-	Sample
29	3	5	43641 MB	5	-NA-	Sample
30	3	6	43641 LCS	5	-NA-	Sample
31	3	7	187-17-1	5	-NA-	Sample
32	3	8	187-17-1 D	5	-NA-	Sample
33	3	9	187-17-2	5	-NA-	Sample
34	3	10	187-17-2 MS	5	-NA-	Sample
35	3	11	187-17-2 MSD	5	-NA-	Sample
36	3	12	187-17-2 PDS	5	-NA-	Sample
37	4	1	187-17-2 L	5	-NA-	Sample
38	4	2	187-17-3	5	-NA-	Sample
39	4	3	187-17-4	5	-NA-	Sample
(40	48	Not Used)				

Rack #3

Pos	Row	Col	Sample Name	Set #	#Used	Type
(1...48	Not Used)					

Rack #4

Pos	Row	Col	Sample Name	Set #	#Used	Type
(1...48	Not Used)					

Rack #5

Pos	Row	Col	Sample Name	Set #	#Used	Type
(1... 48	Not Used)					

Method: TRTAHGL2 Sample Name: ST03 Operator: DEH
Run Time: 10/30/97 01:08 Filename: 103097
Mode: CONC Type: U Corr. Factor: 1.00000
Lab ID.: Cust. Smpl. ID : Cust. ID.: 45603

Elems	Ag3280	Al3082	As1890	B_2496	Ba4934	Be3130
Units	ppb	ppb	ppb	ppb	ppb	ppb
Avge	1007.	995.9	1003.	1007.	999.3	1005.
SDev	3.065	11.69	4.141	2.629	3.285	2.562
%RSD	.3043	1.174	.413	.2611	.3287	.2551

Elems	Ca3179	Cd2265	Ce4186	Co2286	Cr2677	Cu3247
Units	ppb	ppb	ppb	ppb	ppb	ppb
Avge	1004.	1002.	998.7	1004.	1006.	1002.
SDev	6.39	2.952	2.932	3.9	3.835	3.041
%RSD	6363	2946	.2936	.3885	.3814	.3033

Elems	Fe2714	K 7664	Li6707	Mg2790	Mn2576	Mo2020
Units	ppb	ppm	ppb	ppb	ppb	ppb
Avge	1013.	9.569	963.0	1002.	1003	1005.
SDev	10.04	.1351	18.93	7.787	3.402	1.307
%RSD	9915	1.412	1.966	7768	.3392	.13

Elems	Na5502	Ni2316	P 2149	2203-1	2203-2	Sb2068
Units	ppm	ppb	ppb	ppb	ppb	ppb
Avge	9.598	1004	1008	1008.	1005.	999.6
SDev	[illegible]	4.302	14.07	3.056	37.62	5.27
%RSD	[illegible]	.4285	1.395	.3032	3.745	.5272

Elems	1960-1	1960-2	Pb2203	Se1960	Sn1899	Sr4215
Units	ppb	ppb	ppb	ppb	ppb	ppb
Avge	1002.	1000.	1006	1001.	1003.	999.0
SDev	5.178	43.79	24.54	28.66	5.028	2.517
%RSD	.5166	4.379	2.44	2.863	.5011	.2519

Elems	Ti3349	Tl1908	V_2924	Zn2062	Si2881
Units	ppb	ppb	ppb	ppb	ppb
Avge	1000.0	1004.	1003.	1008.	10020.
SDev	3.144	13.71	2.69	3.839	43.08
%RSD	.3144	1.366	.2681	.3807	.4301

Method: TRIANGL2 Sample Name: ICV/CCV Operator: DKH
Run Time: 10/30/97 01:20 Filename: 103097
Mode: CONC Type: Q Corr. Factor: 1.00000
Lab ID.: Cust. Smpl. ID.: Cust. ID.: 43603

Elems	Ag3280	Al3082	As1890	B_2496	Ba4934	Be3130
Units	ppb	ppb	ppb	ppb	ppb	ppb
Avge	502.3	490.6	504.3	496.1	502.0	498.1
SDev	6.085	21.44	5.721	11.12	5.951	8.485
%RSD	1.211	4.371	1.134	2.24	1.186	1.703

Elems	Ca3179	Cd2265	Ce4186	Co2286	Cr2677	Cu3247
Units	ppb	ppb	ppb	ppb	ppb	ppb
Avge	500.5	495.5	492.0	497.2	498.9	504.3
SDev	13.3	10.06	18.65	11.28	11.8	9.079
%RSD	2.657	2.031	3.791	2.269	2.365	1.801

Elems	Fe2714	K 7664	Li6707	Mg2790	Mn2576	Mo2020
Units	ppb	ppm	ppb	ppb	ppb	ppb
Avge	511.5	4.896	489.8	492.1	498.2	499.3
SDev	37.78	.0898	11.75	28.45	10.09	8.248
%RSD	7.386	1.834	2.4	5.776	2.024	1.652

Elems	Na5302	Ni2316	P 2149	2203-1	2203-2	Sb2068
Units	ppm	ppb	ppb	ppb	ppb	ppb
Avge	5.106	496.6	491.0	497.4	494.6	495.5
SDev	.1812	10.07	16.81	18.85	18.17	9.837
%RSD	3.548	2.028	3.423	3.79	3.673	1.985

Elems	1960-1	1960-2	Pb2203	Se1960	Sn1899	Sr4215
Units	ppb	ppb	ppb	ppb	ppb	ppb
Avge	489.8	488.6	495.5	489.0	498.0	498.6
SDev	21.52	12.26	13.54	11.12	8.796	6.816
%RSD	4.393	2.508	2.733	2.274	1.766	1.367

Elems	113549	111908	V 2924	Zn2062	Si2881
Units	ppb	ppb	ppb	ppb	ppb
Avge	496.6	484.0	499.4	496.5	5016.
SDev	6.385	33.16	10.39	12.96	112.1
%RSD	1.286	6.85	2.08	2.612	2.235

Method: TRIANGL2 Sample Name: ICB/CCB Operator: DKH
Run Time: 10/30/97 01:24 Filename: 103097
Mode: CONC Type: Q Corr. Factor: 1.00000
Lab ID.: Cust. Smpl. ID.: Cust. ID.: 43603

Elems	Ag3280	Al3082	As1890	B_2496	Ba4934	Be3130
Units	ppb	ppb	ppb	ppb	ppb	ppb
Avge	-.9742	-18.88	-.8837	2.295	-.3487	-.0419
SDev	2.576	16.95	1.622	3.261	.3315	.1343
%RSD	264.4	89.76	183.5	142.1	95.06	325

Elems	Ca3179	Cd2265	Ce4186	Co2286	Cr2677	Cu3247
Units	ppb	ppb	ppb	ppb	ppb	ppb
Avge	-2.003	-.3016	Q-10.79	Q-1.608	Q-2.021	-1.529
SDev	1.554	.4118	15.07	1.101	1.353	2.153
%RSD	77.57	136.5	139.7	68.45	66.95	140.8

Elems	Fe2714	K 7664	Li6707	Mg2790	Mn2576	Mo2020
Units	ppb	ppm	ppb	ppb	ppb	ppb
Avge	-33.83	-.0125	.0222	-21.51	-.1773	1.118
SDev	22.22	.143	.3649	15.03	.2216	1.322
%RSD	30.46	1143	1645	69.89	125	118.2

Elems	Na3302	Ni2316	P 2149	2203-1	2203-2	Sb2068
Units	ppm	ppb	ppb	ppb	ppb	ppb
Avge	-.3175	-2.364	-13.40	2.130	-2.734	-2.675
SDev	.7569	5266	9.509	1.891	1.432	5.776
%RSD	238.4	22.28	70.94	88.78	52.39	141.2

Elems	1960-1	1960-2	Pb2203	Se1960	Sn1899	Sr4215
Units	ppb	ppb	ppb	ppb	ppb	ppb
Avge	.7391	.3069	-1.114	.4508	-.3396	-.1163
SDev	6.44	2.394	1.409	.5844	1.635	.1798
%RSD	867.3	780.1	126.5	129.6	481.5	154.6

Elems	Ti3349	Tl1908	V 2924	Zn2062	Si2881
Units	ppb	ppb	ppb	ppb	ppb
Avge	-1.963	Q10.87	-1.618	-.5517	-13.55
SDev	1.516	9.905	1.127	.796	51.42
%RSD	77.23	91.13	69.66	144.3	379.4

MCH 10/30/97

Method: TRIANGL2 Sample Name: TC8/CCR Operator: DKH
Run Time: 10/30/97 01:30 Filename: 103097
Mode: CONC Type: Q Corr. Factor: 1.00000
Lab ID : Cust. Smpl ID : Cust. ID : 43603

Elems	Ag3280	Al3082	As1890	B 2496	Ba4934	Be3130
Units	ppb	ppb	ppb	ppb	ppb	ppb
Avge	-.5187	-9.750	-.3902	.2940	-.1273	-.0632
SDev	1.06	5.113	2.796	1.038	.0824	.0312
%RSD	204.4	52.44	716.6	352.9-	64.71	49.47

Elems	Ca3179	Cd2265	Ce4186	Co2286	Cr2677	Cu3247
Units	ppb	ppb	ppb	ppb	ppb	ppb
Avge	-.2855	-.0974	-1.576	-.5120	-.7432	1488
SDev	.6404	.2311	2.063	.5358	.6873	.7234
%RSD	224.3	237.1	130.9	104.7	92.48	486.1

Elems	Fe2714	K 7664	Li6707	Mg2790	Mn2576	Mo2020
Units	ppb	ppm	ppb	ppb	ppb	ppb
Avge	-13.85	.0595	.1030	-8.445	-.0683	.1919
SDev	10.48	.0361	.079	4.531	.0767	.9733
%RSD	75.72	60.63	76.72	53.66	112.2	507.2

Elems	Na3302	Ni2316	P 2149	Pb2203-1	Pb2203-2	Sb2068
Units	ppm	ppb	ppb	ppb	ppb	ppb
Avge	-.1171	-.9401	-10.18	-.0221	-.1837	-.3016
SDev	.2193	1.038	9.899	2.98	1.078	1.333
%RSD	195.2	110.4	96.57	13500	586.7	441.8

Elems	Se1960-1	Se1960-2	Pb2203	Se1960	Sn1899	Sr4215
Units	ppb	ppb	ppb	ppb	ppb	ppb
Avge	-.8089	2.149	-.1299	1.164	-.1022	-.0775
SDev	1.329	.6549	.4677	.4934	1.19	.0459
%RSD	164.2	30.48	360.1	42.4	1165	59.23

Elems	Ti3349	Tl1908	V 2924	Zn2062	Si2881
Units	ppb	ppb	ppb	ppb	ppb
Avge	-1.011	2.195	-.8421	-.1878	7.441
SDev	1.209	5.72	.6828	.269	17.14
%RSD	119.6	260.7	81.08	143.2	230.3

Method: TRIANGL2 Sample Name: ICSAB Operator: DKH
Run Time: 10/30/97 01:35 Filename: 103097
Mode: CONC Type: Q Corr. Factor: 1.00000
Lab ID : Cust. Smpl. ID : Cust. ID.: 43603

Elems	Ba3280	Al3082	As1890	B 2496	Ba4934	Be3130
Units	ppb	ppb	ppb	ppb	ppb	ppb
Avge	527.0	518300	510.5	512.0	508.2	478.3
SDev	4.808	4523	7.529	6.424	7.396	5.244
%RSD	.9125	.8726	1.475	1.255	1.455	1.096

Elems	Ca3179	Cd2265	Ce4186	Co2286	Cr2677	Cu3247
Units	ppb	ppb	ppb	ppb	ppb	ppb
Avge	449000	451.2	485.5	450.1	463.4	518.7
SDev	8050	5.429	10.53	5.193	6.516	7.911
%RSD	1.793	1.203	2.169	1.154	1.406	1.525

Elems	Fe2714	K 7664	Li6707	Mg2790	Mn2576	Mo2020
Units	ppb	ppm	ppb	ppb	ppb	ppb
Avge	172600	926.59	618.2	526800	440.1	488.8
SDev	1987	2.448	57.98	5592	4.877	5.085
%RSD	1.151	9.209	9.379	1.061	1.108	1.04

Elems	Na3302	Ni2316	P 2149	P2203-1	P2203-2	Sb2068
Units	ppm	ppb	ppb	ppb	ppb	ppb
Avge	5.490	438.9	489.1	495.0	438.6	497.3
SDev	.1961	5.955	16.78	27.57	71.96	6.118
%RSD	3.572	1.357	3.431	5.57	16.41	1.23

Elems	Se1960-1	Se1960-2	Se2203	Sn1960	Sn1899	Sr4215
Units	ppb	ppb	ppb	ppb	ppb	ppb
Avge	[illegible]	493.0	457.3	506.5	492.3	498.7
SDev	120.5	104.7	38.92	29.71	3.32	6.257
%RSD	[illegible]	21.23	8.511	5.865	.6743	1.255

Elems	Ti3349	Tl1908	V 2924	Zn2062	Si2881
Units	ppb	ppb	ppb	ppb	ppb
Avge	483.7	489.1	482.5	428.3	5430.
SDev	4.217	17.9	4.803	8.45	65.38
%RSD	.8719	3.659	.9953	1.973	1.204

Analysis Report Averages Thu 10-30-97 06:36:39 AM page 9

1811-23-2A 8x200

Method: TRIAN61? Sample Name: ~~[illegible]~~ ee MKA 10/30/97 Operator: DKH

Run time: 10/30/97 01:53 Filename: 103097

Mode: CONC Type: S Corr. Factor: 1.00000

Lab ID: Cust. Smpl. ID: Cust. ID.: 43603

Elems	Ag3280	As1890	Ba4934	Be3130	Cd2265	Co2286
Units	ppb	ppb	ppb	ppb	ppb	ppb
Avge	3.303	12.32	142.3	1.8226	188.1	1.236
SDev	.5964	1.908	.7	.0066	1.932	.1868
%RSD	18.06	15.49	.4918	.7981	1.027	15.11

Elems	Cr2677	Mn2576	Ni2316	P_2149	Pb2203	Sb2068
Units	ppb	ppb	ppb	ppb	ppb	ppb
Avge	121.8	10420.	22.23	134.9	9932	69.54
SDev	1.486	96.9	.2386	2.541	149	4.17
%RSD	1.22	9302	1.073	1.884	1.5	5.996

Elems	Se1960	Tl1908	Zn2062	Si2881
Units	ppb	ppb	ppb	ppb
Avge	7.143	7.453	55530	14120.
SDev	1.185	4.414	647.5	88.93
%RSD	16.59	59.22	1.166	.6298

Analysis Report Averages Thu 10-30-97 06:36:39 AM Page 10

184-23-2xBx200-PDS

Method: TRIANGL2 Sample Name: ~~187-72-1-X100-PDS~~ Operator: DKH
Run Time: 10/30/97 01:57 Filename: 103097 DKH 10/30/97
Mode: CONC Type: S Corr. Factor: 1.00000
Lab ID.: Cust. Smpl. ID.: Cust. ID.: 43603

Elems	Ag3280	As1890	Ba4934	Be3130	Cd2265	Co2286
Units	ppb	ppb	ppb	ppb	ppb	ppb
Avge	45.63	61.65	188.8	50.34	233.8	50.95
Sdev	8257	1.822	1.66	9834	5.004	1.427
%RSD	1.81	2.955	8795	1.953	2.14	2.801

Elems	Cr2677	Mn2576	Ni2316	P 2149	Pb2203	Sb2068
Units	ppb	ppb	ppb	ppb	ppb	ppb
Avge	167.8	10180	70.82	1115.	9628.	117.8
Sdev	4.561	205.1	2.124	16.75	145.8	1.899
%RSD	2.718	2.015	3	1.502	1.514	1.612

Elems	Se1960	Tl1908	Zn2062	Si2881
Units	ppb	ppb	ppb	ppb
Avge	53.66	56.59	54160.	13830.
Sdev	7022	5.549	1542	169
%RSD	1.309	9.806	2.848	1.222

Method: TPIANGL2 Sample Name: ICV/CCV Operator: DKH
Run Time: 10/30/97 02:15 Filename: 103097
Mode: CONC Type: Q Corr Factor: 1.00000
Lab ID: Cust. Smpl ID.: Cust. ID.: 43231

Elems	Ag3280	Al3082	As1890	B 2496	Ba4934	Be3130
Units	ppb	ppb	ppb	ppb	ppb	ppb
Avge	507.4	491.8	500.9	495.8	502.6	502.9
SDev	6.876	7.229	5.001	9.755	5.631	8.052
%RSD	1.355	1.47	.9985	1.968	1.121	1.601

Elems	Ca3179	Cd2265	Ce4186	Co2286	Cr2677	Cu3247
Units	ppb	ppb	ppb	ppb	ppb	ppb
Avge	501.2	497.9	511.3	501.8	504.3	508.4
SDev	6.904	8.731	13.62	8.629	7.903	7.089
%RSD	1.377	1.754	2.663	1.72	1.567	1.394

Elems	Fe2714	K 7664	Li6707	Mg2790	Mn2576	Mn2020
Units	ppb	ppm	ppb	ppb	ppb	ppb
Avge	515.5	4.787	477.5	499.1	498.5	504.4
SDev	14.2	.151	13.13	9.179	8.098	8.547
%RSD	2.754	3.154	2.751	1.838	1.625	1.655

Elems	Na3302	Ni2316	P 2149	Pb2203-1	Pb2203-2	Sb2068
Units	ppm	ppb	ppb	ppb	ppb	ppb
Avge	1.677	499.9	490.0	523.0	500.0	495.1
SDev	.0139	7.302	4.456	22.03	22.95	8.099
%RSD	0.777	1.461	.9092	4.212	4.589	1.622

Elems	Se1960-1	Se1960-2	Pb2203	Se1960	Sn1899	Sr4215
Units	ppb	ppb	ppb	ppb	ppb	ppb
Avge	523.4	492.6	507.7	502.9	499.3	501.0
SDev	26.38	25.41	20.47	21.09	6.856	6.317
%RSD	5.041	5.158	4.033	4.193	1.373	1.261

Elems	Ti3349	Tl1908	V 2924	Zn2062	Si2881
Units	ppb	ppb	ppb	ppb	ppb
Avge	499.0	480.1	503.5	494.8	5126.
SDev	7.089	27.58	8.373	9.59	56.14
%RSD	1.421	5.746	1.663	1.938	1.095

Method: IRIANGL2 Sample Name: ICB/CCB Operator: DKH
Run Time: 10/30/97 02:19 Filename: 103097
Mode: CONC Type: Q Corr. Factor: 1.00000
Lab ID : Cust. Smpl. ID : Cust. ID.: 43231

Elems	Ag3280	Al3082	As1890	B 2496	Ba4934	Be3130
Units	ppb	ppb	ppb	ppb	ppb	ppb
Avge	-.0878	-14.65	-1.489	1.043	-.1479	-.0765
SDev	1.746	11.48	.6572	2.646	.2724	.0632
%RSD	1989	78.36	44.14	253.7	184.1	82.58

Elems	Ca3179	Cd2265	Ce4186	Co2286	Cr2677	Cu3247
Units	ppb	ppb	ppb	ppb	ppb	ppb
Avge	2.190	-.1742	Q-4.481	Q-1.001	-.9016	-.4490
SDev	1.835	.3692	13.4	1.144	.9534	1.781
%RSD	83.78	211.9	299.1	114.2	105.7	396.7

Elems	Fe2714	K 7664	Li6707	Mg2790	Mn2576	Mo2020
Units	ppb	ppm	ppb	ppb	ppb	ppb
Avge	-14.91	.0371	.0760	-11.58	-.0685	.8268
SDev	26.7	.0963	.2093	13.47	.133	1.509
%RSD	179.1	259.3	275.3	116.3	194.1	182.5

Elems	Na3302	Ni2316	P 2149	Pb2203-1	Pb2203-2	Sb2068
Units	ppm	ppb	ppb	ppb	ppb	ppb
Avge	-.0385	-1.349	-7.169	1.610	-1.539	Q-4.384
SDev	.5144	1.05	11.01	.9925	1.999	2.611
%RSD	1335	77.85	153.5	61.66	84.38	59.55

Elems	Se1960-1	Se1960-2	Th2206	Sn1960	Sn1899	Sr4215
Units	ppb	ppb	ppb	ppb	ppb	ppb
Avge	1.658	1.395	-.4904	.4451	.5012	-.0936
SDev	2.401	3.481	.536	1.941	1.197	.1239
%RSD	145	276.1	109.3	436.1	238.8	132.4

Elems	Ti3349	Tl1908	V 2924	Zn2062	Si2881
Units	ppb	ppb	ppb	ppb	ppb
Avge	-2.676	Q7.167	-1.122	.4136	8.235
SDev	.4434	10.32	1.116	.5753	38.27
%RSD	16.57	144	99.48	139.1	464.7

DKH 10/30/97

Method: IRTANGL2 Sample Name: ICR/CCR Operator: DKH
Run Time: 10/30/97 02:25 Filename: 103097
Mode: CONC Type: Q Corr. Factor: 1.00000
Lab ID.: Cust. Smpl. ID.: Cust. ID.: 43231

Elems	As3280	Al3082	As1890	B_2496	Ba4934	Be3130
Units	ppb	ppb	ppb	ppb	ppb	ppb
Avge	01.316	-9.[illegible]	-.1402	-1.945	-.1471	-.0702
SDev	1.883	4.82[illegible]	.5562	.9188	.162	.0128
%RSD	143	48.25	396.8	47.23	110.2	18.28

Elems	Cd3179	Cd2265	Ce4186	Co2286	Cr2677	Cu3247
Units	ppb	ppb	ppb	ppb	ppb	ppb
Avge	3.088	-.0988	0-5.467	-.4984	-.4418	.1371
SDev	1.611	12	5.081	.8918	.9221	.7944
%RSD	52.16	121.5	92.95	179.5	208.7	579.5

Elems	Fe2714	K 7664	Li6707	Mg2790	Mn2576	Mo2020
Units	ppb	ppm	ppb	ppb	ppb	ppb
Avge	-14.70	.0770	.1553	-8.019	-.0571	-.1414
SDev	20.88	.0687	.1385	11.21	.1109	.4115
%RSD	142	88.54	89.21	139.8	194.2	291

Elems	Na3302	Ni2316	P_2149	2203-1	2203-2	Sb2068
Units	ppm	ppb	ppb	ppb	ppb	ppb
Avge	.2580	-.6118	-9.839	6.857	-4.494	-1.144
SDev	.4321	.9624	5.05	7.877	6.132	.9816
%RSD	167.5	157.3	51.33	114.9	136.4	85.84

Elems	1960-1	1960-2	Pb2203	Se1960	Sn1899	Sr4215
Units	ppb	ppb	ppb	ppb	ppb	ppb
Avge	2.316	-1.186	-.7143	-.0203	.3342	-.0820
SDev	6.473	5.196	1.589	1.313	.9997	.0841
%RSD	279.6	437.9	222.5	6475	299.2	102.5

Elems	Ti3349	Tl1908	V 2924	Zn2062	Si2881
Units	ppb	ppb	ppb	ppb	ppb
Avge	-2.557	-2.456	-1.117	.0948	9.126
SDev	.0615	2.037	.7902	.2163	25.8
%RSD	2.408	83.6	70.76	228.1	282.8

DKH 10/30/97

Method: TRIANGL2 Sample Name: ICB/CCB Operator: OKH
Run Time: 10/30/97 02:46 Filename: 103097
Mode: CONC Type: Q Corr. Factor: 1.00000
Lab ID : Cust. Sampl. ID.: Cust. ID.: 43231

Elems	Ag3280	Al3082	As1890	B 2496	Ba4934	Be3130
Units	ppb	ppb	ppb	ppb	ppb	ppb
Avge	-.3805	-5.114	1.269	-3.048	-.1198	-.0255
SDev	.8585	4.666	1.422	1.018	.0945	.0274
%RSD	225.6	91.23	112.1	33.41	78.83	107.6

Elems	Ca3179	Cd2265	Ce4186	Co2286	Cr2677	Cu3247
Units	ppb	ppb	ppb	ppb	ppb	ppb
Avge	.5042	-.0969	-.4864	-.4261	-.7603	-.4390
SDev	.5815	.1297	2.459	.582	.598	.5621
%RSD	115.3	133.9	505.6	136.6	78.65	128

Elems	Fe2714	K 7664	Li6707	Mg2790	Mn2576	Mo2020
Units	ppb	ppm	ppb	ppb	ppb	ppb
Avge	-17.59	.0015	.0032	-9.149	-.0758	-.1459
SDev	6.433	.0442	.0952	6.162	.0625	.3133
%RSD	51.08	2867	3005	67.35	82.53	214.8

Elems	Na3302	Ni2316	P 2149	2203-1	2203-2	Sb2068
Units	ppm	ppb	ppb	ppb	ppb	ppb
Avge	-.1599	-1.070	-5.094	-1.460	1.452	-.6675
SDev	.25	.0754	2.224	1.692	1.323	1.313
%RSD	156.3	6.863	43.65	115.9	91.12	196.6

Elems	1960-1	1960-2	Pb2203	Se1960	Sn1899	Sr4215
Units	ppb	ppb	ppb	ppb	ppb	ppb
Avge	-4.162	4.324	.4819	1.498	.5664	-.0649
SDev	3.397	1.623	.7299	1.384	2.304	.052
%RSD	81.62	37.54	151.4	92.37	406.8	80.18

Elems	Ti3349	Tl1908	V 2924	Zn2062	Si2881
Units	ppb	ppb	ppb	ppb	ppb
Avge	-2.528	-2.793	-.6813	.0699	-30.67
SDev	.1623	3.733	.3056	.0888	18.24
%RSD	6.42	133.6	44.85	127	59.48

Method: TRIAHGL2 Sample Name: ICSAB Operator: DKH
Run Time: 10/30/97 02:51 Filename: 103097
Mode: CONC Type: 0 Corr. Factor: 1.00000
Lab ID : Cust Sampl ID : Cust ID.: 43231

Elems	Ag3280	Al3082	As1890	B 2496	Ba4934	Be3130
Units	ppb	ppb	ppb	ppb	ppb	ppb
Avge	541.3	525200.	513.8	518.0	515.7	490.7
SDev	6.03	1908	12.07	2.729	3.336	7.546
%RSD	1.114	.3633	2.35	.5269	.6469	1.538

Elems	Ca3179	Cd2265	Ce4186	Co2286	Cr2677	Cu3247
Units	ppb	ppb	ppb	ppb	ppb	ppb
Avge	459500.	464.0	495.6	462.0	476.4	530.7
SDev	6733	6.098	10.18	6.186	7.157	5.383
%RSD	1.465	1.314	2.053	1.339	1.502	1.014

Elems	Fe2714	K 7664	Li6707	Mg2790	Mn2576	Mo2020
Units	ppb	ppm	ppb	ppb	ppb	ppb
Avge	176700.	924.88	582.2	539100.	449.6	497.8
SDev	2312	1.571	32.49	6194	6.018	3.282
%RSD	1.308	6.316	5.581	1.149	1.339	.6593

Elems	Na3302	Ni2316	P 2149	Pb203-1	Pb203-2	Sb2068
Units	ppm	ppb	ppb	ppb	ppb	ppb
Avge	[illegible]	452.3	455.8	506.3	458.3	497.9
SDev	.6619	7.882	99	18.09	12.77	36.33
%RSD	6.833	1.743	21.72	6.951	2.786	7.297

Elems	1960-1	1960-2	Pb2203	Se1960	Sn1899	Sr4215
Units	ppb	ppb	ppb	ppb	ppb	ppb
Avge	533.2	524.4	474.2	527.3	494.1	508.6
SDev	48.77	25.44	3.184	2.722	16.41	3.063
%RSD	9.147	4.851	.6713	.5162	3.321	.603

Elems	Ti3349	Tl1908	V 2924	Zn2062	Si2881
Units	ppb	ppb	ppb	ppb	ppb
Avge	495.4	492.4	493.3	435.6	5567.
SDev	4.132	14.75	4.089	5.834	64.17
%RSD	.8341	2.996	.829	1.339	1.153

Hg

ID/Weight File: AB811.IDW
Sample Volume: 100 mL

Analyst: RICHARDS
Nominal Weight: 1.0 g

Loc.	Sample ID	Weight	Dilution
0	STD BLK		
1	STD1=0.2ug/L		
2	STD2=0.5ug/L		
3	STD3=1.0ug/L		
4	STD4=2.0ug/L		
5	STD5=5.0ug/L		
6	STD6=10.0ug/L		
7	ICV=4.0ug/L		
8	ICB		
9	CHECK LO		
10	43159A MB3		
11	43159A MB3 D		
12	43159A LCS3		
13	43159A LCS3 D		
14	43159A LCS DD		
15	182-30-9E		
16	182-30-9E D		
17	182-30-9E MS		
18	182-30-9E MSD		
19	182-30-7E		
20	182-30-7E D		
21	CCV1=6.0ug/L		
22	CCB1		
23	182-30-14D		
24	182-30-14D D		
25	182-30-15B		
26	182-30-15B D		
27	182-30-15C		
28	182-30-15C D		
29	CCV2=6.0ug/L		
30	CCB2		
31	43231 MB1		
32	43231 MB1 D		
33	43231 LCS1		
34	43231 LCS1 D		
35	183-3-2C		
36	183-3-2C D		
37	183-3-2C MS		
38	183-3-2C MSD		
39	183-3-1B		
40	183-3-1B D		
41	CCV1=6.0ug/L		
42	CCB1		
43	183-3-1C		
44	183-3-1C D		
45	183-3-1D		
46	183-3-1D DX10		
47	183-3-1D DDX10		
48	183-3-1E		
49	183-3~~0~~-1E D 10-30-97 EC		
50	183-3-2B		
51	183-3-2B D		
52	183-3-2D		
53	183-3-2D D		

STD1–STD6: 3-018-7 9/30/97 ME

ICV: 3-018-8 9/30/97 ME

re-prep see data on 10/1/97

To be re-prep 9/30/97 ME

CCV1: 3-018-8 9/30/97 ME

To be re-prep 9/30/97 ME

CCV1: 3-018-8 9/30/97 ME

Loc.	Sample ID	Weight	Dilution
54	CCV2=6.0ug/L	3-018-8	9/30/97 mr
55	CCB2		
56	183-3-2E	To be reprep. 9/30/97 mr	
57	183-3-2E D		
58	183-3-3C		
59	183-3-3C DX5		
60	183-3-3C DDX5		
61	183-3-3C MSX5		
62	183-3-3C MSDX5		
63	183-3-2F	To be reprep 9/30/97 mr	
64	183-3-2F D		
65	CCV3=6.0ug/L	3-018-8	9/30/97 mr
66	CCB3		
67	183-3-3B		
68	183-3-3B D		
69	183-3-3D		
70	183-3-3D D		
71	183-3-3E	To be reprep 9/30/97 mr	
72	183-3-3E D		
73	183-3-3F	To be reprep 9/30/97 mr	
74	183-3-3F D		
75	CCV4=6.0ug/L	3-018-8	9/30/97 mr
76	CCB4		
77	43231 MB2		
78	43231 MB2 D		
79	43231 LCS2		
80	43231 LCS2D		
81	183-3-4B		
82	183-3-4B D		
83	183-3-4C		
84	183-3-4C D		
85	183-3-4C MSX2		
86	183-3-4C MSDX2		
87	CCV1=6.0ug/L	3-018-8	9/30/97 mr
88	CCB1		
89	183-3-4D		
90	183-3-4D D		
91	183-3-4E		
92	183-3-4E D		
93	183-3-4F		
94	183-3-4F D		
95	183-3-5B		
96	183-3-5B D		
97	183-3-5C		
98	183-3-5C D		
99	CCV2=6.0ug/L	3-018-8	9/30/97 mr
100	CCB2		
101	183-3-5D		
102	183-3-5D D		
103	183-3-5E		
104	183-3-5E D		
105	183-3-6C		
106	183-3-6C DX5		
107	183-3-6C DDX5		
108	183-3-6C MSX5		
109	183-3-6C MSDX5		

Loc.	Sample ID	Weight	Dilution
110	183-3-6B		
111	183-3-6B D		
112	CCV3=6.0ug/L	3-018-8	9/30/97 WR
113	CCB3		
114	183-3-6D		
115	183-3-6D D		
116	183-3-6E		
117	183-3-6E D		
118	183-3-6F		
119	183-3-6F D		
120	183-3-7B		
121	183-3-7B D		
122	183-3-7C		
123	183-3-7C DX5		
124	183-3-7C DDX5		
125	CCV4=6.0ug/L	3-018-8	9/30/97 WR
126	CCB4		
127	183-3-7D		
128	183-3-7D D		
129	183-3-7E		
130	183-3-7E D		
131	183-3-7E MS		
132	183-3-7E MSD		
133	183-3-7F		
134	183-3-7F D		
135	183-3-8B		
136	183-3-8B D		
137	CCV5=6.0ug/L	3-018-8	9/30/97 WR
138	CCB5		
139	183-3-8C	To be Reprep. 9/30/97 WR.	
140	183-3-8C DX5		
141	183-3-8C DDX5		
142	183-3-8D		
143	183-3-8D D		
144	183-3-8E		
145	183-3-8E D		
146	183-3-8F		
147	183-3-8F D		
148	CCV6=6.0ug/L		
149	CCB6		

Element File: HG_.MEL
Element: Hg2
Print Data: Main+Suppl.
Print: Calib. Curve
Remarks:
STANDARDS= 3-018-7
QC= 3-018-8

Analyst: RICHARDS
Peak Storage: None

Hg
9/30/97 MR.

INSTRUMENT: 5100
Wavelength: 253.7 Peak
Signal Type: AA
Read Time: 30.0
Sample Replicates: 1
Standard Replicates: 1

Technique: MHS
Slit: 0.7 Low
Signal Measurement: Peak Height (5)
Read Delay: 1.0

Version: 7.01
BOC Time: 2

FLAME:
Flame Type: Air
Oxidant Flow: 10.0 L/min

Flame Sensor: On
Fuel Flow: 2.0 L/min

CALIBRATION:

Solutions	ID	Conc
Calib. Blank	STD BLK	
Standard 1	STD 1	0.200
Standard 2	STD 2	0.500
Standard 3	STD 3	1.000
Standard 4	STD 4	2.000
Standard 5	STD 5	5.000
Standard 6	STD 6	10.000

Calibration Units: ug/L
Calibration Type: Linear

Sample Units: ug/L

QC:
Matrix Check Calculations:
% Difference for Dupls: No Locations:
% Recovery for Spike: No Locations: Conc:

```
---------------------------------------------------------------------------
Element File: HG_.MEL        Element: Hg2                  Wavelength: 253.7
Date: 09/30/97               Time: 09:27                   Slit: 0.7 L
Data File: AB811.DAT         ID/Wt File: AB811.IDW         Lamp Current: 0
Technique: MHS               Calib. Type: Linear           Energy: 72
Remark 1: STANDARDS= 3-018-7
Remark 2: QC= 3-018-8
---------------------------------------------------------------------------
~~~~~~~~~~~~~~~~~~~~~~~~~~~~~~~~~~~~~~~~~~~~~~~~~~~~~~~~~~~~~~~~~~~~~~~~~~~~

Hg2   ID: STD BLK            Seq. No.: 00003    A/S Pos.: --    Date: 09/30/97

Replicate  1                           Time: 09:28
Peak Area (A-s): 0.002                 Peak Height (A): -0.001
Blank Corrected Pk Height (A): -0.001
Concentration (ug/L  ): -0.026

Auto-zero performed.

~~~~~~~~~~~~~~~~~~~~~~~~~~~~~~~~~~~~~~~~~~~~~~~~~~~~~~~~~~~~~~~~~~~~~~~~~~~~

Hg2   ID: STD1=0.2ug/L       Seq. No.: 00004    A/S Pos.: --    Date: 09/30/97

Replicate  1                           Time: 09:29
Peak Area (A-s): 0.148                 Peak Height (A): 0.006
Blank Corrected Pk Height (A): 0.006
Concentration (ug/L  ): 0.160

Standard number 1 applied.  [0.200]
Correlation coefficient: 1.00000       Slope: 0.0281

~~~~~~~~~~~~~~~~~~~~~~~~~~~~~~~~~~~~~~~~~~~~~~~~~~~~~~~~~~~~~~~~~~~~~~~~~~~~

Hg2   ID: STD2=0.5ug/L       Seq. No.: 00005    A/S Pos.: --    Date: 09/30/97

Sample abs. is greater than that of the largest standard.
Replicate  1                           Time: 09:31
Peak Area (A-s): 0.403                 Peak Height (A): 0.016
Blank Corrected Pk Height (A): 0.016
Concentration (ug/L  ): 0.579

Standard number 2 applied.  [0.500]
Correlation coefficient: 0.99265       Slope: 0.0320

~~~~~~~~~~~~~~~~~~~~~~~~~~~~~~~~~~~~~~~~~~~~~~~~~~~~~~~~~~~~~~~~~~~~~~~~~~~~

Hg2   ID: STD3=1.0ug/L       Seq. No.: 00006    A/S Pos.: --    Date: 09/30/97

Sample abs. is greater than that of the largest standard.
Replicate  1                           Time: 09:32
Peak Area (A-s): 0.915                 Peak Height (A): 0.037
Blank Corrected Pk Height (A): 0.037
Concentration (ug/L  ): 1.164

Standard number 3 applied.  [1.000]
Correlation coefficient: 0.99169       Slope: 0.0362

~~~~~~~~~~~~~~~~~~~~~~~~~~~~~~~~~~~~~~~~~~~~~~~~~~~~~~~~~~~~~~~~~~~~~~~~~~~~

Hg2   ID: STD4=2.0ug/L       Seq. No.: 00007    A/S Pos.: --    Date: 09/30/97

Sample abs. is greater than that of the largest standard.
Replicate  1                           Time: 09:33
Peak Area (A-s): 1.749                 Peak Height (A): 0.070
```

Blank Corrected Pk Height (A): 0.070
Concentration (ug/L): 1.941

Standard number 4 applied. [2.000]
Correlation coefficient: 0.99832 Slope: 0.0354

~~~
~~~

Element File: HG_.MEL	Element: Hg2	Wavelength: 253.7
Date: 09/30/97	Time: 09:36	Slit: 0.7 L
Data File: AB811.DAT	ID/Wt File: AB811.IDW	Lamp Current: 0
Technique: MHS	Calib. Type: Linear	Energy: 72

Remark 1: STANDARDS= 3-018-7
Remark 2: QC= 3-018-8

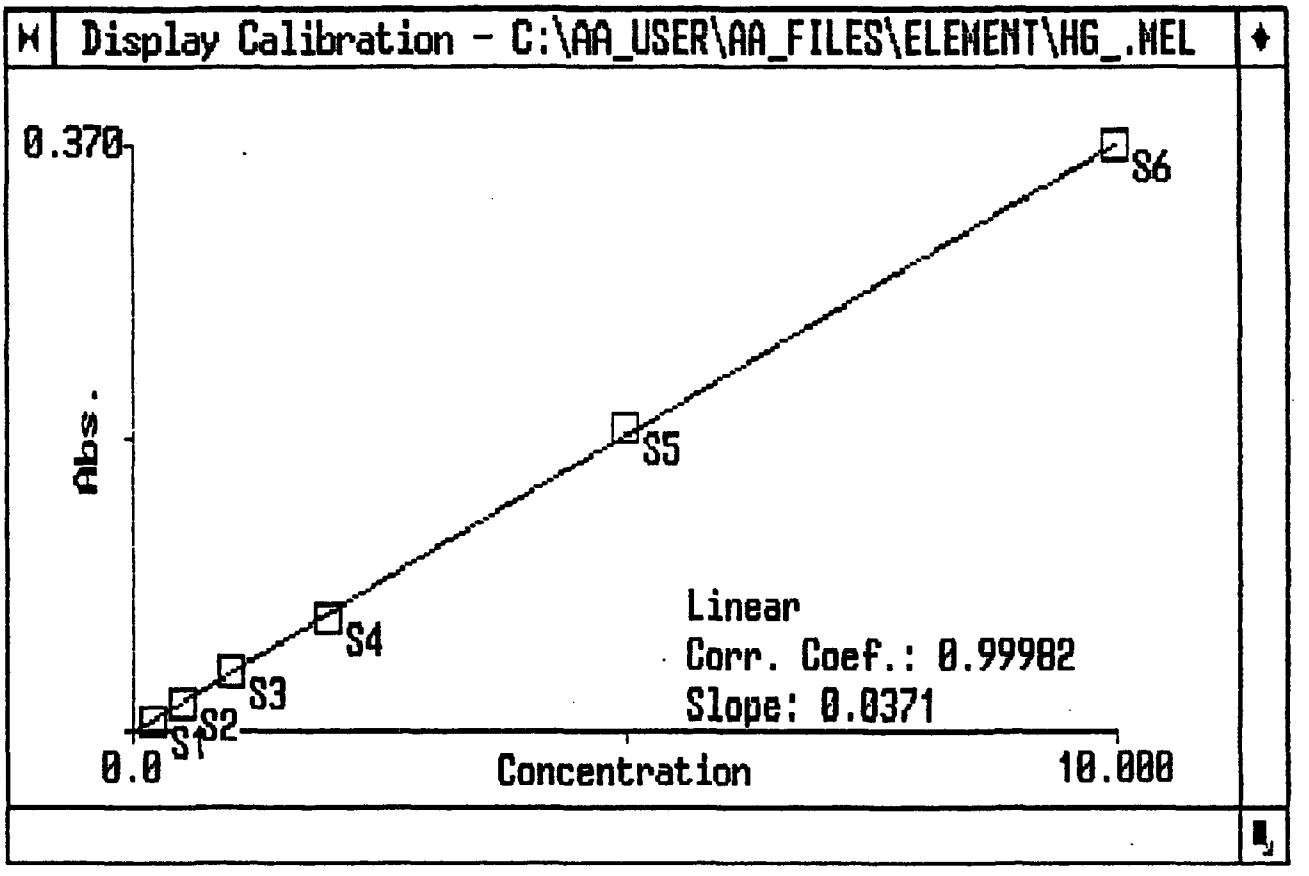

Element File: HG_.MEL Element: Hg2 Wavelength: 253.7
Date: 09/30/97 Time: 09:38 Slit: 0.7 L
Data File: AB811.DAT ID/Wt File: AB811.IDW Lamp Current: 0
Technique: MHS Calib. Type: Linear Energy: 72
Remark 1: STANDARDS= 3-018-7
Remark 2: QC= 3-018-8

Hg2 ID: ICV=4.0ug/L Seq. No.: 00010 A/S Pos.: -- Date: 09/30/97

Replicate 1 Time: 09:39
Peak Area (A-s): 3.815 Peak Height (A): 0.157
Blank Corrected Pk Height (A): 0.157
Concentration (ug/L): 4.229

Hg2 ID: ICB Seq. No.: 00011 A/S Pos.: -- Date: 09/30/97

Replicate 1 Time: 09:41
Peak Area (A-s): 0.015 Peak Height (A): 0.001
Blank Corrected Pk Height (A): 0.001
Concentration (ug/L): 0.014

Hg2 ID: CHECK LO Seq. No.: 00012 A/S Pos.: -- Date: 09/30/97

Replicate 1 Time: 09:42
Peak Area (A-s): 0.194 Peak Height (A): 0.008
Blank Corrected Pk Height (A): 0.008
Concentration (ug/L): 0.208

Hg2 ID: 43159A MB3 Seq. No.: 00013 A/S Pos.: -- Date: 09/30/97

Replicate 1 Time: 09:46
Peak Area (A-s): 0.009 Peak Height (A): 0.001
Blank Corrected Pk Height (A): 0.001
Concentration (ug/L): 0.014

Hg2 ID: 43159A MB3 D Seq. No.: 00014 A/S Pos.: -- Date: 09/30/97

Replicate 1 Time: 09:47
Peak Area (A-s): 0.018 Peak Height (A): 0.001
Blank Corrected Pk Height (A): 0.001
Concentration (ug/L): 0.038

Hg2 ID: 43159A LCS3 Seq. No.: 00015 A/S Pos.: -- Date: 09/30/97

Replicate 1 Time: 09:48
Peak Area (A-s): 3.251 Peak Height (A): 0.132
Blank Corrected Pk Height (A): 0.132
Concentration (ug/L): 3.574

Delete also lab me

Hg2 ID: 43159A LCS3 Seq. No.: 00016 A/S Pos.: -- Date: 09/30/97

Hg2 ID: 182-30-15B D Seq. No.: 00031 A/S Pos.: -- Date: 09/30/97

Replicate 1 Time: 10:40
Peak Area (A-s): 0.017 Peak Height (A): 0.001
Blank Corrected Pk Height (A): 0.001
Concentration (ug/L): 0.024

Hg2 ID: 182-30-15C Seq. No.: 00032 A/S Pos.: -- Date: 09/30/97

Replicate 1 Time: 10:42
Peak Area (A-s): 0.022 Peak Height (A): 0.001
Blank Corrected Pk Height (A): 0.001
Concentration (ug/L): 0.035

Hg2 ID: 182-30-15C D Seq. No.: 00033 A/S Pos.: -- Date: 09/30/97

Replicate 1 Time: 10:43
Peak Area (A-s): 0.045 Peak Height (A): 0.002
Blank Corrected Pk Height (A): 0.002
Concentration (ug/L): 0.057

Hg2 ID: CCV2=6.0ug/L Seq. No.: 00034 A/S Pos.: -- Date: 09/30/97

Replicate 1 Time: 10:44
Peak Area (A-s): 4.570 Peak Height (A): 0.191
Blank Corrected Pk Height (A): 0.191
Concentration (ug/L): 5.150

Hg2 ID: CCB2 Seq. No.: 00035 A/S Pos.: -- Date: 09/30/97

Replicate 1 Time: 10:45
Peak Area (A-s): 0.035 Peak Height (A): 0.001
Blank Corrected Pk Height (A): 0.001
Concentration (ug/L): 0.038

Hg2 ID: 43231 MB1 Seq. No.: 00036 A/S Pos.: -- Date: 09/30/97

Replicate 1 Time: 10:46
Peak Area (A-s): 0.028 Peak Height (A): 0.001
Blank Corrected Pk Height (A): 0.001
Concentration (ug/L): 0.030

Hg2 ID: 43231 MB1 D Seq. No.: 00037 A/S Pos.: -- Date: 09/30/97

Replicate 1 Time: 10:47
Peak Area (A-s): 0.025 Peak Height (A): 0.001
Blank Corrected Pk Height (A): 0.001
Concentration (ug/L): 0.027

Hg2 ID: 43231 LCS1 Seq. No.: 00038 A/S Pos.: -- Date: 09/30/97

Replicate 1 Time: 10:49
Peak Area (A-s): 4.465 Peak Height (A): 0.184
Blank Corrected Pk Height (A): 0.184
Concentration (ug/L): 4.979

~~~
~~~

Concentration (ug/L): 0.079

Hg2 ID: CCV1=6.0ug/L Seq. No.: 00046 A/S Pos.: -- Date: 09/30/97

Replicate 1 Time: 10:58
Peak Area (A-s): 4.458 Peak Height (A): 0.188
Blank Corrected Pk Height (A): 0.188
Concentration (ug/L): 5.068

Hg2 ID: CCB1 Seq. No.: 00047 A/S Pos.: -- Date: 09/30/97

Replicate 1 Time: 10:59
Peak Area (A-s): 0.050 Peak Height (A): 0.002
Blank Corrected Pk Height (A): 0.002
Concentration (ug/L): 0.054

Hg2 ID: 183-3-1C Seq. No.: 00048 A/S Pos.: -- Date: 09/30/97

Replicate 1 Time: 11:01
Peak Area (A-s): 0.039 Peak Height (A): 0.002
Blank Corrected Pk Height (A): 0.002
Concentration (ug/L): 0.043

Hg2 ID: 183-3-1C D Seq. No.: 00049 A/S Pos.: -- Date: 09/30/97

Replicate 1 Time: 11:02
Peak Area (A-s): 0.030 Peak Height (A): 0.002
Blank Corrected Pk Height (A): 0.002
Concentration (ug/L): 0.043

Hg2 ID: 183-3-1D Seq. No.: 00050 A/S Pos.: -- Date: 09/30/97

Sample abs. is greater than that of the largest standard.
Replicate 1 Time: 11:03
Peak Area (A-s): 48.733 Peak Height (A): 1.915
Blank Corrected Pk Height (A): 1.915
Concentration (ug/L): 51.677

Hg2 ID: 183-3-1D ~~DX10~~ ~~Seq.~~ No.: 00051 A/S Pos.: -- Date: 09/30/97

Replicate 1 Time: 11:11
Peak Area (A-s): 0.089 Peak Height (A): 0.004
Blank Corrected Pk Height (A): 0.004
Concentration (ug/L): 0.095

Hg2 ID: 183-3-1D DDX10 Seq. No.: 00052 A/S Pos.: -- Date: 09/30/97

Replicate 1 Time: 11:13
Peak Area (A-s): 0.083 Peak Height (A): 0.003
Blank Corrected Pk Height (A): 0.003
Concentration (ug/L): 0.087 — Omit Re Analyzed 12-31-97

Hg2 ID: 183-3-1E Seq. No.: 00053 A/S Pos.: -- Date: 09/30/97

Replicate 1 Time: 11:15
Peak Area (A-s): 0.062 Peak Height (A): 0.003
Blank Corrected Pk Height (A): 0.003
Concentration (ug/L): 0.076

Hg2 ID: 183-3-1E D Seq. No.: 00054 A/S Pos.: -- Date: 09/30/97

Replicate 1 Time: 11:17
Peak Area (A-s): 0.164 Peak Height (A): 0.007
Blank Corrected Pk Height (A): 0.007
Concentration (ug/L): 0.176

Hg2 ID: 183-3-2B Seq. No.: 00055 A/S Pos.: -- Date: 09/30/97

Replicate 1 Time: 11:19
Peak Area (A-s): 0.066 Peak Height (A): 0.003
Blank Corrected Pk Height (A): 0.003
Concentration (ug/L): 0.079

Hg2 ID: 183-3-2B D Seq. No.: 00056 A/S Pos.: -- Date: 09/30/97

Replicate 1 Time: 11:20
Peak Area (A-s): 0.078 Peak Height (A): 0.003
Blank Corrected Pk Height (A): 0.003
Concentration (ug/L): 0.087

Hg2 ID: 183-3-2D Seq. No.: 00057 A/S Pos.: -- Date: 09/30/97

Replicate 1 Time: 11:21
Peak Area (A-s): 0.066 Peak Height (A): 0.003
Blank Corrected Pk Height (A): 0.003
Concentration (ug/L): 0.070

Hg2 ID: 183-3-2D D Seq. No.: 00058 A/S Pos.: -- Date: 09/30/97

Replicate 1 Time: 11:23
Peak Area (A-s): 0.068 Peak Height (A): 0.003
Blank Corrected Pk Height (A): 0.003
Concentration (ug/L): 0.073

Hg2 ID: CCV2=6.0ug/L Seq. No.: 00059 A/S Pos.: -- Date: 09/30/97

Replicate 1 Time: 11:24
Peak Area (A-s): 4.952 Peak Height (A): 0.207
Blank Corrected Pk Height (A): 0.207
Concentration (ug/L): 5.575

Hg2 ID: CCB2 Seq. No.: 00060 A/S Pos.: -- Date: 09/30/97

Replicate 1 Time: 11:26
Peak Area (A-s): 0.034 Peak Height (A): 0.001
Blank Corrected Pk Height (A): 0.001
Concentration (ug/L): 0.038

~~~
~~~

Blank Corrected Pk Height (A): 0.186
Concentration (ug/L): 5.011

~~~
~~~

Hg2 ID: 183-3-3D D Seq. No.: 00075 A/S Pos.: -- Date: 09/30/97

Replicate 1 Time: 12:07
Peak Area (A-s): 0.715 Peak Height (A): 0.029
Blank Corrected Pk Height (A): 0.029
Concentration (ug/L): 0.788

Hg2 ID: 183-3-3E Seq. No.: 00076 A/S Pos.: -- Date: 09/30/97

Replicate 1 Time: 12:09
Peak Area (A-s): 0.161 Peak Height (A): 0.007
Blank Corrected Pk Height (A): 0.007
Concentration (ug/L): 0.187

Reanalyze RPD high 09-11-97

Hg2 ID: 183-3-3E D Seq. No.: 00077 A/S Pos.: -- Date: 09/30/97

Replicate 1 Time: 12:10
Peak Area (A-s): 0.431 Peak Height (A): 0.018
Blank Corrected Pk Height (A): 0.018
Concentration (ug/L): 0.487

Hg2 ID: 183-3-3F Seq. No.: 00078 A/S Pos.: -- Date: 09/30/97

Replicate 1 Time: 12:12
Peak Area (A-s): 0.169 Peak Height (A): 0.007
Blank Corrected Pk Height (A): 0.007
Concentration (ug/L): 0.181

Hg2 ID: 183-3-3F D Seq. No.: 00079 A/S Pos.: -- Date: 09/30/97

Replicate 1 Time: 12:13
Peak Area (A-s): 0.351 Peak Height (A): 0.014
Blank Corrected Pk Height (A): 0.014
Concentration (ug/L): 0.387

Hg2 ID: CCV4=6.0ug/L Seq. No.: 00080 A/S Pos.: -- Date: 09/30/97

Replicate 1 Time: 12:14
Peak Area (A-s): 5.137 Peak Height (A): 0.216
Blank Corrected Pk Height (A): 0.216
Concentration (ug/L): 5.818

Hg2 ID: CCB4 Seq. No.: 00081 A/S Pos.: -- Date: 09/30/97

Replicate 1 Time: 12:15
Peak Area (A-s): 0.045 Peak Height (A): 0.002
Blank Corrected Pk Height (A): 0.002
Concentration (ug/L): 0.049

Hg2 ID: 43231 MB2 Seq. No.: 00082 A/S Pos.: -- Date: 09/30/97

Replicate 1 Time: 13:06
Peak Area (A-s): 0.032 Peak Height (A): 0.001
Blank Corrected Pk Height (A): 0.001
Concentration (ug/L): 0.035

~~~
~~~

Concentration (ug/L): 7.987

Hg2 ID: 183-3-4C MSX2 Seq. No.: 00090 A/S Pos.: -- Date: 09/30/97

Replicate 1 Time: 13:23
Peak Area (A-s): 4.143 Peak Height (A): 0.174
Blank Corrected Pk Height (A): 0.174
Concentration (ug/L): 4.689

Hg2 ID: 183-3-4C MSDX2 Seq. No.: 00091 A/S Pos.: -- Date: 09/30/97

Replicate 1 Time: 13:24
Peak Area (A-s): 3.969 Peak Height (A): 0.162
Blank Corrected Pk Height (A): 0.162
Concentration (ug/L): 4.383

Hg2 ID: CCV1=6.0ug/L Seq. No.: 00092 A/S Pos.: -- Date: 09/30/97

Replicate 1 Time: 13:25
Peak Area (A-s): 5.289 Peak Height (A): 0.221
Blank Corrected Pk Height (A): 0.221
Concentration (ug/L): 5.970

Hg2 ID: CCB1 Seq. No.: 00093 A/S Pos.: -- Date: 09/30/97

Replicate 1 Time: 13:26
Peak Area (A-s): 0.061 Peak Height (A): 0.002
Blank Corrected Pk Height (A): 0.002
Concentration (ug/L): 0.065

Hg2 ID: 183-3-4D Seq. No.: 00094 A/S Pos.: -- Date: 09/30/97

Replicate 1 Time: 13:30
Peak Area (A-s): 0.139 Peak Height (A): 0.005
Blank Corrected Pk Height (A): 0.005
Concentration (ug/L): 0.143

Hg2 ID: 183-3-4D D Seq. No.: 00095 A/S Pos.: -- Date: 09/30/97

Replicate 1 Time: 13:31
Peak Area (A-s): 0.128 Peak Height (A): 0.005
Blank Corrected Pk Height (A): 0.005
Concentration (ug/L): 0.141

Hg2 ID: 183-3-4E Seq. No.: 00096 A/S Pos.: -- Date: 09/30/97

Replicate 1 Time: 13:32
Peak Area (A-s): 0.668 Peak Height (A): 0.027
Blank Corrected Pk Height (A): 0.027
Concentration (ug/L): 0.726

~~~
~~~

Replicate 1 Time: 13:41
Peak Area (A-s): 5.296 Peak Height (A): 0.221
Blank Corrected Pk Height (A): 0.221
Concentration (ug/L): 5.970

~~~
~~~

Blank Corrected Pk Height (A): 0.268
Concentration (ug/L): 7.221

~~~
~~~

Hg2 ID: 183-3-6D Seq. No.: 00119 A/S Pos.: -- Date: 09/30/97

Replicate 1 Time: 14:13
Peak Area (A-s): 0.899 Peak Height (A): 0.037
Blank Corrected Pk Height (A): 0.037
Concentration (ug/L): 1.002

Hg2 ID: 183-3-6D D Seq. No.: 00120 A/S Pos.: -- Date: 09/30/97

Replicate 1 Time: 14:14
Peak Area (A-s): 0.895 Peak Height (A): 0.037
Blank Corrected Pk Height (A): 0.037
Concentration (ug/L): 0.994

Hg2 ID: 183-3-6E Seq. No.: 00121 A/S Pos.: -- Date: 09/30/97

Replicate 1 Time: 14:15
Peak Area (A-s): 0.612 Peak Height (A): 0.025
Blank Corrected Pk Height (A): 0.025
Concentration (ug/L): 0.666

Hg2 ID: 183-3-6E D Seq. No.: 00122 A/S Pos.: -- Date: 09/30/97

Replicate 1 Time: 14:16
Peak Area (A-s): 0.634 Peak Height (A): 0.026
Blank Corrected Pk Height (A): 0.026
Concentration (ug/L): 0.707

Hg2 ID: 183-3-6F Seq. No.: 00123 A/S Pos.: -- Date: 09/30/97

Replicate 1 Time: 14:17
Peak Area (A-s): 0.822 Peak Height (A): 0.034
Blank Corrected Pk Height (A): 0.034
Concentration (ug/L): 0.915

Hg2 ID: 183-3-6F D Seq. No.: 00124 A/S Pos.: -- Date: 09/30/97

Replicate 1 Time: 14:19
Peak Area (A-s): 0.184 Peak Height (A): 0.008
Blank Corrected Pk Height (A): 0.008
Concentration (ug/L): 0.208

Hg2 ID: 183-3-7B Seq. No.: 00125 A/S Pos.: -- Date: 09/30/97

Replicate 1 Time: 14:21
Peak Area (A-s): 0.035 Peak Height (A): 0.002
Blank Corrected Pk Height (A): 0.002
Concentration (ug/L): 0.049

Hg2 ID: 183-3-7B D Seq. No.: 00126 A/S Pos.: -- Date: 09/30/97

Replicate 1 Time: 14:22
Peak Area (A-s): 0.105 Peak Height (A): 0.004
Blank Corrected Pk Height (A): 0.004
Concentration (ug/L): 0.114

~~~
~~~

Blank Corrected Pk Height (A): 0.054
Concentration (ug/L): 1.467

~~~
~~~

Δ 11-4-97 ee

Hg2 ID: 183-3-8B D Seq. No.: 00141 A/S Pos.: -- Date: 09/30/97

Replicate 1 Time: 15:01
Peak Area (A-s): 0.032 Peak Height (A): 0.002
Blank Corrected Pk Height (A): 0.002
Concentration (ug/L): 0.043

Hg2 ID: CCV5=6.0ug/L Seq. No.: 00142 A/S Pos.: -- Date: 09/30/97

Replicate 1 Time: 15:02
Peak Area (A-s): 5.657 Peak Height (A): 0.238
Blank Corrected Pk Height (A): 0.238
Concentration (ug/L): 6.414

Hg2 ID: CCB5 Seq. No.: 00143 A/S Pos.: -- Date: 09/30/97

Replicate 1 Time: 15:04
Peak Area (A-s): 0.034 Peak Height (A): 0.001
Blank Corrected Pk Height (A): 0.001
Concentration (ug/L): 0.032

Hg2 ID: 183-3-8C Seq. No.: 00144 A/S Pos.: -- Date: 09/30/97

Sample abs. is greater than that of the largest standard. Omit ee 11-4-97 CCV Failed
Replicate 1 Time: 15:06
Peak Area (A-s): 25.797 Peak Height (A): 1.064
Blank Corrected Pk Height (A): 1.064
Concentration (ug/L): 28.715

Hg2 ID: 183-3-8C DX5 Seq. No.: 00145 A/S Pos.: -- Date: 09/30/97

Replicate 1 Time: 15:15
Peak Area (A-s): 2.095 Peak Height (A): 0.086
Blank Corrected Pk Height (A): 0.086
Concentration (ug/L): 2.318

Hg2 ID: 183-3-8C ~~D~~DX5 D Seq. No.: 00146 A/S Pos.: -- Date: 09/30/97
ee 11-4-97 ee

Replicate 1 Time: 15:17
Peak Area (A-s): 2.171 Peak Height (A): 0.090
Blank Corrected Pk Height (A): 0.090
Concentration (ug/L): 2.420

Hg2 ID: 183-3-8D Seq. No.: 00147 A/S Pos.: -- Date: 09/30/97

Replicate 1 Time: 15:18
Peak Area (A-s): 0.939 Peak Height (A): 0.038
Blank Corrected Pk Height (A): 0.038
Concentration (ug/L): 1.037

Hg2 ID: 183-3-8D D Seq. No.: 00148 A/S Pos.: -- Date: 09/30/97

Replicate 1 Time: 15:19
Peak Area (A-s): 0.959 Peak Height (A): 0.040
Blank Corrected Pk Height (A): 0.040
Concentration (ug/L): 1.069

Hg2 ID: 183-3-8E Seq. No.: 00149 A/S Pos.: -- Date: 09/30/97

Replicate 1 Time: 15:21
Peak Area (A-s): 0.591 Peak Height (A): 0.024
Blank Corrected Pk Height (A): 0.024
Concentration (ug/L): 0.639

Hg2 ID: 183-3-8E D Seq. No.: 00150 A/S Pos.: -- Date: 09/30/97

Replicate 1 Time: 15:22
Peak Area (A-s): 0.568 Peak Height (A): 0.023
Blank Corrected Pk Height (A): 0.023
Concentration (ug/L): 0.620

Hg2 ID: 183-3-8F Seq. No.: 00151 A/S Pos.: -- Date: 09/30/97

Replicate 1 Time: 15:23
Peak Area (A-s): 0.144 Peak Height (A): 0.006
Blank Corrected Pk Height (A): 0.006
Concentration (ug/L): 0.168

Hg2 ID: 183-3-8F D Seq. No.: 00152 A/S Pos.: -- Date: 09/30/97

Replicate 1 Time: 15:24
Peak Area (A-s): 0.082 Peak Height (A): 0.004
Blank Corrected Pk Height (A): 0.004
Concentration (ug/L): 0.100

Hg2 ID: CCV6=6.0ug/L Seq. No.: 00153 A/S Pos.: -- Date: 09/30/97

Sample abs. is greater than that of the largest standard.
Replicate 1 Time: 15:26
Peak Area (A-s): 25.910 Peak Height (A): 1.066
Blank Corrected Pk Height (A): 1.066
Concentration (ug/L): 28.780

Omit wrong sample
11-4-97

Hg2 ID: CCV6=6.0ug/L Seq. No.: 00154 A/S Pos.: -- Date: 09/30/97

Replicate 1 Time: 15:28
Peak Area (A-s): 8.743 Peak Height (A): 0.372
Blank Corrected Pk Height (A): 0.372
Concentration (ug/L): 10.047

Failed,
samples will be reprepped
11-4-97

~~~
~~~

ID/Weight File: A6812.IDW Analyst: RICHARDS
Sample Volume: 100 mL Nominal Weight: 1.0 g

tlg

Loc.	Sample ID	Weight	Dilution
0	STD BLK		
1	STD1=0.2ug/L		
2	STD2=0.5ug/L		
3	STD3=1.0ug/L		
4	STD4=2.0ug/L		
5	STD5=5.0ug/		
6	STD6=10.0ug/L		
7	ICV=4.0ug/L		
8	ICB		
9	CHECK LO		
10	43159A MB4		
11	43159A MB4 D		
12	43159A LCS4		
13	43159A LCS4 D		
14	182-30-7E		
15	182-30-7E D		
16	182-30-7E MS		
17	182-30-7E MSD		
18	182-30-9E		
19	182-30-9E D		
20	CCV1=6.0ug/L		
21	CCB1		
22	43233B MB		
23	43233B MB D		
24	43233 LCS		
25	43233 LCS D		
26	183-5-1		
27	183-5-1 D		
28	183-5-1 MS		
29	183-5-1 MSD		
30	TCLP BLK		
31	TCLP BLK D		
32	CCV1=6.0ug/L		
33	CCB1		
34	43231 MB3		
35	43231 MB3 D		
36	43231 LCS3		
37	43231 LCS3 D		
38	183-3-1D		
39	183-3-1D D		
40	183-3-2E		
41	183-3-2E D		
42	183-3-2E MS		
43	183-3-2E MSD		
44	CCV1=6.0ug/L		
45	CCB1		
46	183-3-2F		
47	183-3-2F D		
48	183-3-3E		
49	183-3-3E D		
50	183-3-3F		
51	183-3-3F D		
52	183-3-1EF		
53	183-3-1EF D		

3-019-1 mR 10/1/97

3-019-2 mR 10/1/97

3-019-2 mR 10/1/97

3-019-2 mR 10/1/97

3-019-2 mR 10/1/97

3-019-2 mR 10/1/97

Loc.	Sample ID	Weight	Dilution
54	183-3-5EF		
55	183-3-5EF D		
56	CCV2=6.0ug/L	3-019-2 me 10/1/97	
57	CCB2		
58	183-3-6F		
59	183-3-6F D		
60	183-3-8C		
61	183-3-8C DX2		
62	183-3-8C DDX2		
63	183-3-8D		
64	183-3-8D D		
65	183-3-8E		
66	183-3-8E D		
67	183-3-8E MS		
68	183-3-8E MSD		
69	CCV3=6.0ug/L	3-019-2 me 10/1/97	
70	CCB3		
71	183-3-8F		
72	183-3-8F D		
73	CCV4=6.0ug/L	3-019-2 me 10/1/97	
74	CCB4		

Hg
10/1/97 MR

Element File: HG_.MEL
Element: Hg2
Print Data: Main+Suppl.
Print: Calib. Curve
Remarks:
STANDARDS= 3-019-1
QC= 3-019-2

Analyst: RICHARDS
Peak Storage: None

INSTRUMENT: 5100
Wavelength: 253.7 Peak
Signal Type: AA
Read Time: 30.0
Sample Replicates: 1
Standard Replicates: 1

Technique: MHS
Slit: 0.7 Low
Signal Measurement: Peak Height (5)
Read Delay: 1.0

Version: 7.01
BOC Time: 2

FLAME:
Flame Type: Air
Oxidant Flow: 10.0 L/min

Flame Sensor: On
Fuel Flow: 2.0 L/min

CALIBRATION:

Solutions	ID	Conc
Calib. Blank	STD BLK	
Standard 1	STD 1	0.200
Standard 2	STD 2	0.500
Standard 3	STD 3	1.000
Standard 4	STD 4	2.000
Standard 5	STD 5	5.000
Standard 6	STD 6	10.000

Calibration Units: ug/L
Calibration Type: Linear

Sample Units: ug/L

QC:
Matrix Check Calculations:
% Difference for Dupls: No
% Recovery for Spike: No

Locations:
Locations:

Conc:

```
-----------------------------------------------------------------------------
Element File: HG_.MEL        Element: Hg2                  Wavelength: 253.7
Date: 10/01/97               Time: 09:25                   Slit: 0.7 L
Data File: AB812.DAT         ID/Wt File: AB812.IDW         Lamp Current: 0
Technique: MHS               Calib. Type: Linear           Energy: 72
Remark 1: STANDARDS= 3-019-1
Remark 2: QC= 3-019-2
-----------------------------------------------------------------------------
~~~~~~~~~~~~~~~~~~~~~~~~~~~~~~~~~~~~~~~~~~~~~~~~~~~~~~~~~~~~~~~~~~~~~~~~~~~~~

Hg2   ID: STD BLK            Seq. No.: 00003    A/S Pos.: --    Date: 10/01/97

Replicate  1                           Time: 09:27
Peak Area (A-s): -0.004                Peak Height (A): -0.001
Blank Corrected Pk Height (A): -0.001

Auto-zero performed.

~~~~~~~~~~~~~~~~~~~~~~~~~~~~~~~~~~~~~~~~~~~~~~~~~~~~~~~~~~~~~~~~~~~~~~~~~~~~~

Hg2   ID: STD1=0.2ug/L       Seq. No.: 00004    A/S Pos.: --    Date: 10/01/97

Replicate  1                           Time: 09:28
Peak Area (A-s): 0.162                 Peak Height (A): 0.007
Blank Corrected Pk Height (A): 0.007

Standard number 1 applied.  [0.200]
Correlation coefficient: 1.00000       Slope: 0.0331

~~~~~~~~~~~~~~~~~~~~~~~~~~~~~~~~~~~~~~~~~~~~~~~~~~~~~~~~~~~~~~~~~~~~~~~~~~~~~

Hg2   ID: STD2=0.5ug/L       Seq. No.: 00005    A/S Pos.: --    Date: 10/01/97

Sample abs. is greater than that of the largest standard.
Replicate  1                           Time: 09:29
Peak Area (A-s): 0.407                 Peak Height (A): 0.017
Blank Corrected Pk Height (A): 0.017
Concentration (ug/L  ): 0.503

Standard number 2 applied.  [0.500]
Correlation coefficient: 0.99999       Slope: 0.0333

~~~~~~~~~~~~~~~~~~~~~~~~~~~~~~~~~~~~~~~~~~~~~~~~~~~~~~~~~~~~~~~~~~~~~~~~~~~~~

Hg2   ID: STD3=1.0ug/L       Seq. No.: 00006    A/S Pos.: --    Date: 10/01/97

Sample abs. is greater than that of the largest standard.
Replicate  1                           Time: 09:30
Peak Area (A-s): 0.854                 Peak Height (A): 0.036
Blank Corrected Pk Height (A): 0.036
Concentration (ug/L  ): 1.085

Standard number 3 applied.  [1.000]
Correlation coefficient: 0.99780       Slope: 0.0355

~~~~~~~~~~~~~~~~~~~~~~~~~~~~~~~~~~~~~~~~~~~~~~~~~~~~~~~~~~~~~~~~~~~~~~~~~~~~~

Hg2   ID: STD4=2.0ug/L       Seq. No.: 00007    A/S Pos.: --    Date: 10/01/97

Sample abs. is greater than that of the largest standard.
Replicate  1                           Time: 09:32
Peak Area (A-s): 1.759                 Peak Height (A): 0.075
Blank Corrected Pk Height (A): 0.075
Concentration (ug/L  ): 2.101
```

tandard number 4 applied. [2.000]
Correlation coefficient: 0.99899 Slope: 0.0369

~~~
~~~

Element File: HG_.MEL	Element: Hg2	Wavelength: 253.7
Date: 10/01/97	Time: 09:35	Slit: 0.7 L
Data File: AB812.DAT	ID/Wt File: AB812.IDW	Lamp Current: 0
Technique: MHS	Calib. Type: Linear	Energy: 72

Remark 1: STANDARDS= 3-019-1
Remark 2: QC= 3-019-2

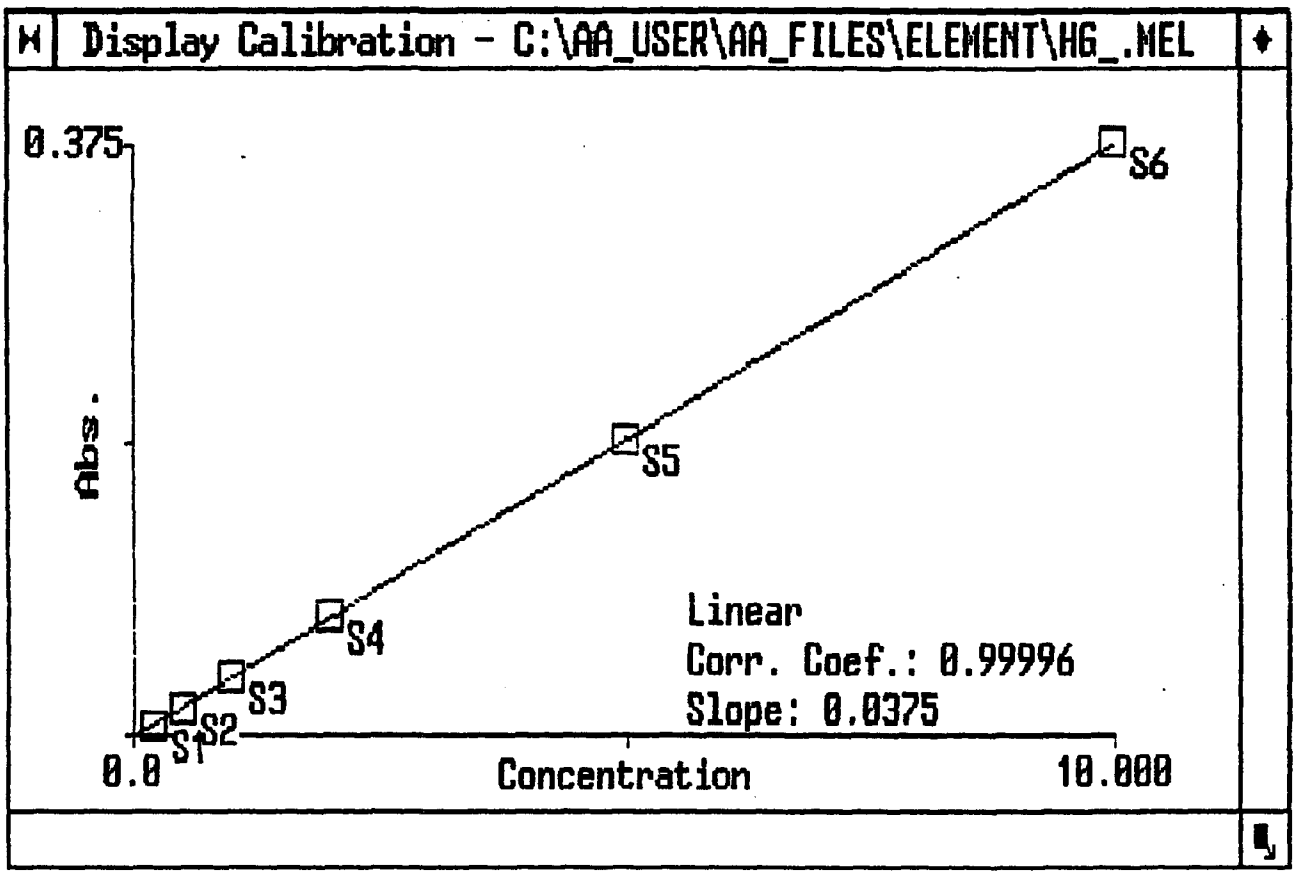

Element File: HG_.MEL Element: Hg2 Wavelength: 253.7
ate: 10/01/97 Time: 09:37 Slit: 0.7 L
ata File: AB812.DAT ID/Wt File: AB812.IDW Lamp Current: 0
Technique: MHS Calib. Type: Linear Energy: 72
emark 1: STANDARDS= 3-019-1
emark 2: QC= 3-019-2

g2 ID: ICV=4.0ug/L Seq. No.: 00010 A/S Pos.: -- Date: 10/01/97

Replicate 1 Time: 09:37
eak Area (A-s): 3.529 Peak Height (A): 0.152
lank Corrected Pk Height (A): 0.152
Concentration (ug/L): 4.052

Hg2 ID: ICB Seq. No.: 00011 A/S Pos.: -- Date: 10/01/97

eplicate 1 Time: 09:41
Peak Area (A-s): -0.001 Peak Height (A): 0.000
Blank Corrected Pk Height (A): 0.000
oncentration (ug/L): 0.005

g2 ID: CHECK LO Seq. No.: 00012 A/S Pos.: -- Date: 10/01/97

Replicate 1 Time: 09:42
eak Area (A-s): 0.155 Peak Height (A): 0.006
lank Corrected Pk Height (A): 0.006
Concentration (ug/L): 0.163

g2 ID: 43159A MB4 Seq. No.: 00013 A/S Pos.: -- Date: 10/01/97

eplicate 1 Time: 09:43
eak Area (A-s): -0.001 Peak Height (A): 0.000
Blank Corrected Pk Height (A): 0.000
oncentration (ug/L): 0.003

Hg2 ID: 43159A MB4 D Seq. No.: 00014 A/S Pos.: -- Date: 10/01/97

eplicate 1 Time: 09:44
Peak Area (A-s): -0.004 Peak Height (A): -0.000
lank Corrected Pk Height (A): -0.000
oncentration (ug/L): -0.005

g2 ID: 43159A LCS4 Seq. No.: 00015 A/S Pos.: -- Date: 10/01/97

Replicate 1 Time: 09:45
eak Area (A-s): 3.808 Peak Height (A): 0.164
lank Corrected Pk Height (A): 0.164
Concentration (ug/L): 4.365

Hg2 ID: 43159A LCS4 D Seq. No.: 00016 A/S Pos.: -- Date: 10/01/97

~~~
~~~

Replicate 1 Time: 10:17
Peak Area (A-s): 0.008 Peak Height (A): 0.000
Blank Corrected Pk Height (A): 0.000
Concentration (ug/L): 0.011

~~~
~~~

Concentration (ug/L): 5.183

~~~
~~~

Hg2 ID: 183-3-3F Seq. No.: 00053 A/S Pos.: -- Date: 10/01/97

Replicate 1 Time: 10:34
Peak Area (A-s): 0.049 Peak Height (A): 0.002
Blank Corrected Pk Height (A): 0.002
Concentration (ug/L): 0.062

Hg2 ID: 183-3-3F D Seq. No.: 00054 A/S Pos.: -- Date: 10/01/97

Replicate 1 Time: 10:35
Peak Area (A-s): 0.047 Peak Height (A): 0.002
Blank Corrected Pk Height (A): 0.002
Concentration (ug/L): 0.053

Hg2 ID: 183-3-1EF Seq. No.: 00055 A/S Pos.: -- Date: 10/01/97

Replicate 1 Time: 10:38
Peak Area (A-s): 0.008 Peak Height (A): 0.000
Blank Corrected Pk Height (A): 0.000
Concentration (ug/L): 0.008

Hg2 ID: 183-3-1EF D Seq. No.: 00056 A/S Pos.: -- Date: 10/01/97

Replicate 1 Time: 10:39
Peak Area (A-s): 0.023 Peak Height (A): 0.001
Blank Corrected Pk Height (A): 0.001
Concentration (ug/L): 0.024

Hg2 ID: 183-3-5EF Seq. No.: 00057 A/S Pos.: -- Date: 10/01/97

Replicate 1 Time: 10:40
Peak Area (A-s): 0.012 Peak Height (A): 0.000
Blank Corrected Pk Height (A): 0.000
Concentration (ug/L): 0.011

Hg2 ID: 183-3-5EF D Seq. No.: 00058 A/S Pos.: -- Date: 10/01/97

Replicate 1 Time: 10:41
Peak Area (A-s): 0.034 Peak Height (A): 0.001
Blank Corrected Pk Height (A): 0.001
Concentration (ug/L): 0.035

Hg2 ID: CCV2=6.0ug/L Seq. No.: 00059 A/S Pos.: -- Date: 10/01/97

Replicate 1 Time: 10:42
Peak Area (A-s): 4.449 Peak Height (A): 0.190
Blank Corrected Pk Height (A): 0.190
Concentration (ug/L): 5.060

Hg2 ID: CCB2 Seq. No.: 00060 A/S Pos.: -- Date: 10/01/97

Replicate 1 Time: 10:44
Peak Area (A-s): 0.016 Peak Height (A): 0.000
Blank Corrected Pk Height (A): 0.000
Concentration (ug/L): 0.011

~~~
~~~

Blank Corrected Pk Height (A): 0.037
Concentration (ug/L): 0.974

~~~
~~~

Hg2 ID: 183-3-8F Seq. No.: 00075 A/S Pos.: -- Date: 10/01/97

Replicate 1 Time: 11:13
Peak Area (A-s): 0.048 Peak Height (A): 0.002
Blank Corrected Pk Height (A): 0.002
Concentration (ug/L): 0.059

Hg2 ID: 183-3-8F D Seq. No.: 00076 A/S Pos.: -- Date: 10/01/97

Replicate 1 Time: 11:14
Peak Area (A-s): 0.103 Peak Height (A): 0.004
Blank Corrected Pk Height (A): 0.004
Concentration (ug/L): 0.112

Hg2 ID: CCV4=6.0ug/L Seq. No.: 00077 A/S Pos.: -- Date: 10/01/97

Replicate 1 Time: 11:15
Peak Area (A-s): 4.850 Peak Height (A): 0.207
Blank Corrected Pk Height (A): 0.207
Concentration (ug/L): 5.507

Hg2 ID: CCB4 Seq. No.: 00078 A/S Pos.: -- Date: 10/01/97

Replicate 1 Time: 11:16
Peak Area (A-s): 0.018 Peak Height (A): 0.001
Blank Corrected Pk Height (A): 0.001
Concentration (ug/L): 0.016

ID/Weight File: AB815.IDW
Sample Volume: 100 mL

Analyst: RICHARDS
Nominal Weight: 1.0 g

Hg

Loc.	Sample ID	Weight	Dilution
0	STD BLK		
1	STD1=0.2ug/L		
2	STD2=0.5ug/L		
3	STD3=1.0ug/L	3-020-1	10/6/97
4	STD4=2.0ug/L		
5	STD5=5.0ug/L		
6	STD6=10.0ug/L		
7	ICV=4.0ug/L	3-020-2	10/6/97
8	ICB		
9	CHECK LO		
10	43231 MB3		
11	43231 MB3 D		
12	43231 LCS3		
13	43231 LCS3 D		
14	184-23-1AB		
15	184-23-1AB D		
16	184-23-1AB MSD x2		
17	184-23-1AB MSD x2		
18	184-23-2AB		
19	184-23-2AB D		
20	CCV1=6.0ug/L	3-020-2	10/6/97
21	CCB1		
22	184-23-3AB		
23	184-23-3AB D		
24	184-23-4AB		
25	184-23-4AB D		
26	184-23-6AB		
27	184-23-6AB D		
28	184-23-7AB		
29	184-23-7AB D		
30	184-23-8AB		
31	184-23-8AB D		
32	CCV2=6.0ug/L	3-020-2	10/6/97
33	CCB2		
34	184-23-9AB		
35	184-23-9AB D		
36	CCV3=6.0ug/L	3-020-2	10/6/97
37	CCB3		

Element File: HG_.MEL
Element: Hg2
Print Data: Main+Suppl.
Print: Calib. Curve
Remarks:
STANDARDS= 3-020-1
QC= 3-020-2

Analyst: RICHARDS
Peak Storage: None

10/6/97 NR

INSTRUMENT: 5100
Wavelength: 253.7 Peak
Signal Type: AA
Read Time: 30.0
Sample Replicates: 1
Standard Replicates: 1

Technique: MHS
Slit: 0.7 Low
Signal Measurement: Peak Height (5)
Read Delay: 1.0

Version: 7.01
BOC Time: 2

FLAME:
Flame Type: Air
Oxidant Flow: 10.0 L/min

Flame Sensor: On
Fuel Flow: 2.0 L/min

CALIBRATION:

Solutions	ID	Conc
Calib. Blank	STD BLK	
Standard 1	STD 1	0.200
Standard 2	STD 2	0.500
Standard 3	STD 3	1.000
Standard 4	STD 4	2.000
Standard 5	STD 5	5.000
Standard 6	STD 6	10.000

Calibration Units: ug/L
Calibration Type: Linear

Sample Units: ug/L

QC:
Matrix Check Calculations:
% Difference for Dupls: No Locations:
% Recovery for Spike: No Locations: Conc:

```
-----------------------------------------------------------------------------
Element File: HG_.MEL          Element: Hg2                    Wavelength: 253.7
Date: 10/06/97                 Time: 12:47                     Slit: 0.7 L
Data File: AB815.DAT           ID/Wt File: AB815.IDW           Lamp Current: 0
Technique: MHS                 Calib. Type: Linear             Energy: 71
Remark 1: STANDARDS= 3-020-1
Remark 2: QC= 3-020-2
-----------------------------------------------------------------------------
~~~~~~~~~~~~~~~~~~~~~~~~~~~~~~~~~~~~~~~~~~~~~~~~~~~~~~~~~~~~~~~~~~~~~~~~~~~~~
Hg2   ID: STD BLK              Seq. No.: 00003    A/S Pos.: --    Date: 10/06/97

Replicate  1                              Time: 12:48
Peak Area (A-s): -0.000                   Peak Height (A): 0.000
Blank Corrected Pk Height (A): 0.000
Concentration (ug/L  ): 0.003

Auto-zero performed.
~~~~~~~~~~~~~~~~~~~~~~~~~~~~~~~~~~~~~~~~~~~~~~~~~~~~~~~~~~~~~~~~~~~~~~~~~~~~~
Hg2   ID: STD1=0.2ug/L         Seq. No.: 00004    A/S Pos.: --    Date: 10/06/97

Replicate  1                              Time: 12:49
Peak Area (A-s): 0.123                    Peak Height (A): 0.005
Blank Corrected Pk Height (A): 0.005
Concentration (ug/L  ): 0.121

Standard number 1 applied.  [0.200]
Correlation coefficient: 1.00000          Slope: 0.0231
~~~~~~~~~~~~~~~~~~~~~~~~~~~~~~~~~~~~~~~~~~~~~~~~~~~~~~~~~~~~~~~~~~~~~~~~~~~~~
Hg2   ID: STD2=0.5ug/L         Seq. No.: 00005    A/S Pos.: --    Date: 10/06/97

Sample abs. is greater than that of the largest standard.
Replicate  1                              Time: 12:51
Peak Area (A-s): 0.335                    Peak Height (A): 0.013
Blank Corrected Pk Height (A): 0.013
Concentration (ug/L  ): 0.565

Standard number 2 applied.  [0.500]
Correlation coefficient: 0.99473          Slope: 0.0257
~~~~~~~~~~~~~~~~~~~~~~~~~~~~~~~~~~~~~~~~~~~~~~~~~~~~~~~~~~~~~~~~~~~~~~~~~~~~~
Hg2   ID: STD3=1.0ug/L         Seq. No.: 00006    A/S Pos.: --    Date: 10/06/97

Sample abs. is greater than that of the largest standard.
Replicate  1                              Time: 12:52
Peak Area (A-s): 0.708                    Peak Height (A): 0.028
Blank Corrected Pk Height (A): 0.028
Concentration (ug/L  ): 1.073

Standard number 3 applied.  [1.000]
Correlation coefficient: 0.99763          Slope: 0.0272
~~~~~~~~~~~~~~~~~~~~~~~~~~~~~~~~~~~~~~~~~~~~~~~~~~~~~~~~~~~~~~~~~~~~~~~~~~~~~
Hg2   ID: STD4=2.0ug/L         Seq. No.: 00007    A/S Pos.: --    Date: 10/06/97

Sample abs. is greater than that of the largest standard.
Replicate  1                              Time: 12:53
Peak Area (A-s): 1.570                    Peak Height (A): 0.063
```

Blank Corrected Pk Height (A): 0.063
Concentration (ug/L): 2.321

Standard number 4 applied. [2.000]
Correlation coefficient: 0.99425 Slope: 0.0306

~~~
~~~

Element File: HG_.MEL	Element: Hg2	Wavelength: 253.7
Date: 10/06/97	Time: 12:56	Slit: 0.7 L
Data File: AB815.DAT	ID/Wt File: AB815.IDW	Lamp Current: 0
Technique: MHS	Calib. Type: Linear	Energy: 71

Remark 1: STANDARDS= 3-020-1
Remark 2: QC= 3-020-2

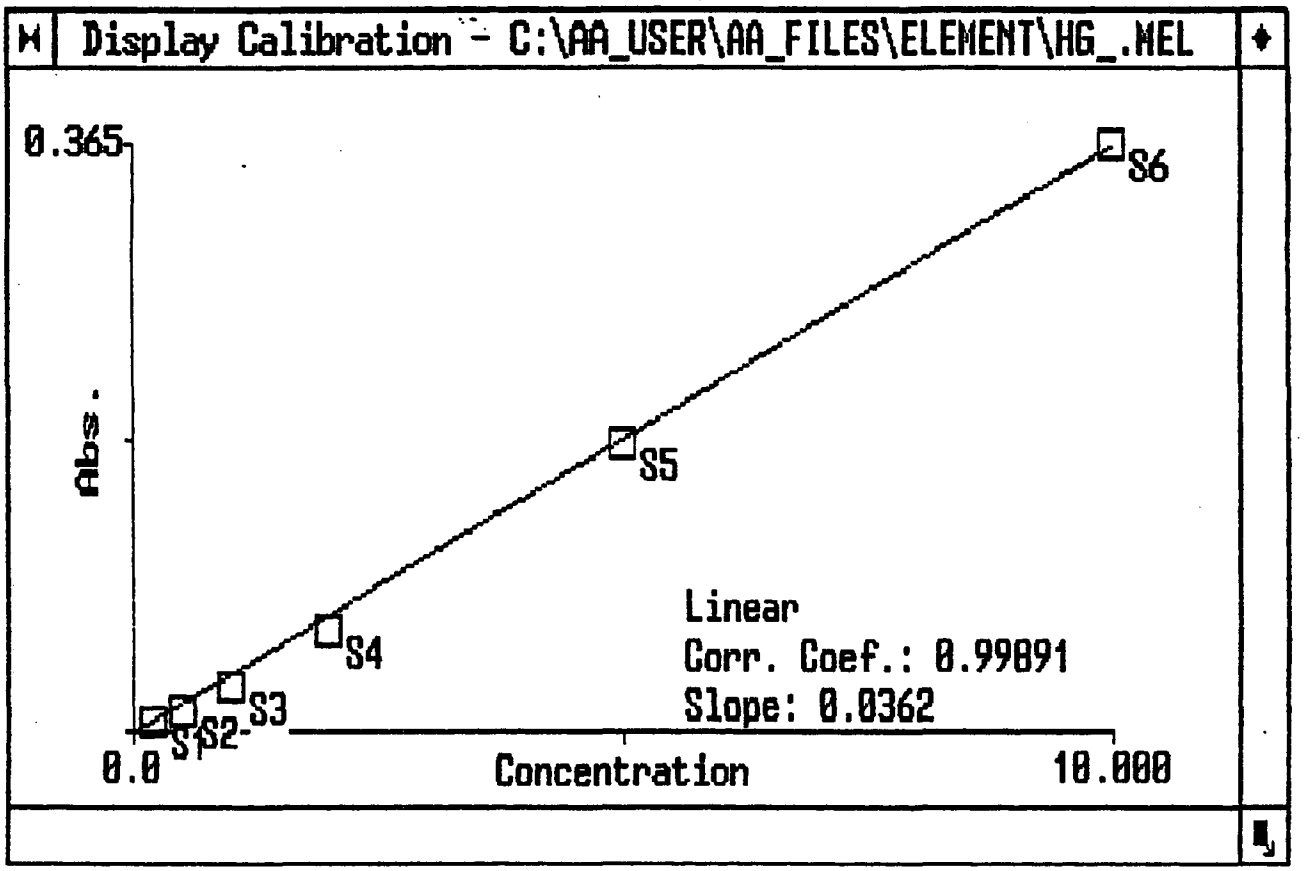

Element File: HG_.MEL Element: Hg2 Wavelength: 253.7
Date: 10/06/97 Time: 12:57 Slit: 0.7 L
Data File: AB815.DAT ID/Wt File: AB815.IDW Lamp Current: 0
Technique: MHS Calib. Type: Linear Energy: 71
Remark 1: STANDARDS= 3-020-1
Remark 2: QC= 3-020-2

Hg2 ID: ICV=4.0ug/L Seq. No.: 00010 A/S Pos.: -- Date: 10/06/9

Replicate 1 Time: 12:58
Peak Area (A-s): 3.724 Peak Height (A): 0.158
Blank Corrected Pk Height (A): 0.158
Concentration (ug/L): 4.374

Hg2 ID: ICB Seq. No.: 00011 A/S Pos.: -- Date: 10/06/97

Replicate 1 Time: 13:00
Peak Area (A-s): 0.008 Peak Height (A): 0.000
Blank Corrected Pk Height (A): 0.000
Concentration (ug/L): 0.011

Hg2 ID: CHECK LO Seq. No.: 00012 A/S Pos.: -- Date: 10/06/97

Replicate 1 Time: 13:02
Peak Area (A-s): 0.093 Peak Height (A): 0.004
Blank Corrected Pk Height (A): 0.004
Concentration (ug/L): 0.097

Hg2 ID: 43231 MB~~3~~ 4 10-11-97 CC Seq. No.: 00013 A/S Pos.: -- Date: 10/06/97

Replicate 1 Time: 13:03
Peak Area (A-s): 0.009 Peak Height (A): 0.000
Blank Corrected Pk Height (A): 0.000
Concentration (ug/L): 0.000

Hg2 ID: 43231 MB~~3~~ 4 D 10-11-97 CC Seq. No.: 00014 A/S Pos.: -- Date: 10/06/97

Replicate 1 Time: 13:04
Peak Area (A-s): 0.005 Peak Height (A): 0.000
Blank Corrected Pk Height (A): 0.000
Concentration (ug/L): 0.006

Hg2 ID: 43231 LCS~~3~~ 4 10-11-97 CC Seq. No.: 00015 A/S Pos.: -- Date: 10/06/97

Replicate 1 Time: 13:05
Peak Area (A-s): 3.826 Peak Height (A): 0.172
Blank Corrected Pk Height (A): 0.172
Concentration (ug/L): 4.748

Hg2 ID: 43231 LCS~~3~~ 4 D 10-11-97 CC Seq. No.: 00016 A/S Pos.: -- Date: 10/06/97

Replicate 1 Time: 13:06
Peak Area (A-s): 4.141 Peak Height (A): 0.178
Blank Corrected Pk Height (A): 0.178
Concentration (ug/L): 4.928

~~~
~~~

Concentration (ug/L): 9.097

~~~
~~~

Hg2 ID: 184-23-6AB D Seq. No.: 00031 A/S Pos.: -- Date: 10/06/97

eplicate 1 Time: 13:33
eak Area (A-s): 0.078 Peak Height (A): 0.003
Blank Corrected Pk Height (A): 0.003
oncentration (ug/L): 0.083

g2 ID: 184-23-7AB Seq. No.: 00032 A/S Pos.: -- Date: 10/06/97

Replicate 1 Time: 13:34
Peak Area (A-s): 0.034 Peak Height (A): 0.001
lank Corrected Pk Height (A): 0.001
oncentration (ug/L): 0.033

g2 ID: 184-23-7AB D Seq. No.: 00033 A/S Pos.: -- Date: 10/06/97

eplicate 1 Time: 13:35
eak Area (A-s): 0.032 Peak Height (A): 0.002
Blank Corrected Pk Height (A): 0.002
Concentration (ug/L): 0.042

Hg2 ID: 184-23-8AB Seq. No.: 00034 A/S Pos.: -- Date: 10/06/97

eplicate 1 Time: 13:36
Peak Area (A-s): 0.041 Peak Height (A): 0.001
lank Corrected Pk Height (A): 0.001
oncentration (ug/L): 0.036

g2 ID: 184-23-8AB D Seq. No.: 00035 A/S Pos.: -- Date: 10/06/97

Replicate 1 Time: 13:37
eak Area (A-s): 0.041 Peak Height (A): 0.001
lank Corrected Pk Height (A): 0.001
Concentration (ug/L): 0.036

Hg2 ID: CCV2=6.0ug/L Seq. No.: 00036 A/S Pos.: -- Date: 10/06/97

eplicate 1 Time: 13:38
eak Area (A-s): 5.261 Peak Height (A): 0.229
Blank Corrected Pk Height (A): 0.229
oncentration (ug/L): 6.329

g2 ID: CCB2 Seq. No.: 00037 A/S Pos.: -- Date: 10/06/97

Replicate 1 Time: 13:39
Peak Area (A-s): 0.029 Peak Height (A): 0.001
lank Corrected Pk Height (A): 0.001
oncentration (ug/L): 0.025

g2 ID: 184-23-9AB Seq. No.: 00038 A/S Pos.: -- Date: 10/06/97

Replicate 1 Time: 13:40
Peak Area (A-s): 0.018 Peak Height (A): 0.000
Blank Corrected Pk Height (A): 0.000
Concentration (ug/L): 0.006

~~~
~~~

D/Weight File: A8816.IDW Analyst: RICHARDS
Sample Volume: 100 mL Nominal Weight: 1.0 g

Loc.	Sample ID	Weight	Dilution
0	STD BLK		
1	STD1=0.2ug/L		
2	STD2=0.5ug/L		
3	STD3=1.0ug/L		
4	STD4=2.0ug/L		
5	STD5=5.0ug/L		
6	STD6=10.0ug/L		
7	ICV=4.0ug/L		
8	ICB		
9	CHECK LO		
10	43231 MB4		
11	43231 MB4 D		
12	43231 LCS4		
13	43231 LCS4 D		
14	184-25-5 10AB, 183-15-1B		
15	184-25-5 10AB Ø, 183-15-1BD		
16	183-15-1Ø BD		
17	183-15-1D D		
18	183-15-1C MS		
19	183-15-1C MSD		
20	CCV1=6.0ug/L		
21	CCB1		
22	183-15-1C		
23	183-15-1C D		
24	183-15-1B		
25	183-15-1B D		
26	183-15-1E		
27	183-15-1E D		
28	CCV2=6.0ug/L		
29	CCB2		
30	43271 MB1		
31	43271 MB1 D		
32	43271 LCS1		
33	43271 LCS1		
34	183-43-1AB		
35	183-43-1AB D		
36	183-43-1C		
37	183-43-1C D		
38	183-43-1C MS		
39	183-43-1C MSD		
40	CCV1=6.0ug/L		
41	CCB1		
42	183-43-1D		
43	183-43-1D D		
44	183-43-1E		
45	183-43-1E D		
46	183-43-1F		
47	183-43-1F D		
48	183-43-2AB		
49	183-43-2AB D		
50	183-43-3AB		
51	183-43-3AB D		
52	CCV2=6.0ug/L		
53	CCB2		

3-020-3 MR 10/8/97

3-020-4 MR 10/8/97

3-020-4 MR 10/8/97

3-020-4 MR 10/8/97

3-020-4 MR 10/8/97

3-020-4 MR 10/8/97

Loc.	Sample ID	Weight	Dilution
54	183-43-2D		
55	183-43-2D D		
56	183-43-2E		
57	183-43-2E D		
58	183-43-2C		
59	183-43-2C D		
60	183-43-2C MS		
61	183-43-2C MSD		
62	183-43-2F		
63	183-43-2F D		
64	CCV3=6.0ug/L	3-020-4 MR 10/8/97	
65	CCB3		
66	183-43-4BC		
67	183-43-4BC D		
68	183-43-3D } To be reprep.		
69	183-43-3D D }		
70	183-43-3E		
71	183-43-3E D		
72	183-43-3F		
73	183-43-3F D		
74	183-43-4AB		
75	183-43-4AB D		
76	CCV4=6.0ug/L	3-020-4 MR 10/8/97	
77	CCB4		
78	183-43-4D		
79	183-43-4D D		
80	183-43-3C		
81	183-43-3C D		
82	183-43-3C MS		
83	183-43-3C MSD		
84	183-43-4E		
85	183-43-4E D		
86	183-43-4F } To be reprep.		
87	183-43-4F D }		
88	CCV5=6.0ug/L	3-020-4 MR 10/8/97	
89	CCB5		

Element File: HG_.MEL
Element: Hg2
Print Data: Main+Suppl.
Print: Calib. Curve
Remarks:
STANDARDS= 3-020-3
QC= 3-020-4

Analyst: RICHARDS
Peak Storage: None

10/8/97 e

INSTRUMENT: 5100
Wavelength: 253.7 Peak
Signal Type: AA
Read Time: 30.0
Sample Replicates: 1
Standard Replicates: 1

Technique: MHS
Slit: 0.7 Low
Signal Measurement: Peak Height (5)
Read Delay: 1.0

Version: 7.01
BOC Time: 2

FLAME:
Flame Type: Air
Oxidant Flow: 10.0 L/min

Flame.Sensor: On
Fuel Flow: 2.0 L/min

CALIBRATION:

Solutions	ID	Conc
Calib. Blank	STD BLK	
Standard 1	STD 1	0.200
Standard 2	STD 2	0.500
Standard 3	STD 3	1.000
Standard 4	STD 4	2.000
Standard 5	STD 5	5.000
Standard 6	STD 6	10.000

Calibration Units: ug/L
Calibration Type: Linear

Sample Units: ug/L

QC:
Matrix Check Calculations:
% Difference for Dupls: No Locations:
% Recovery for Spike: No Locations: Conc:

```
-----------------------------------------------------------------------------
Element File: HG_.MEL          Element: Hg2                  Wavelength: 253.7
Date: 10/08/97                 Time: 09:47                   Slit: 0.7 L
Data File: AB816.DAT           ID/Wt File: AB816.IDW         Lamp Current: 0
Technique: MHS                 Calib. Type: Linear           Energy: 71
Remark 1: STANDARDS= 3-020-3
Remark 2: QC= 3-020-4
-----------------------------------------------------------------------------
~~~~~~~~~~~~~~~~~~~~~~~~~~~~~~~~~~~~~~~~~~~~~~~~~~~~~~~~~~~~~~~~~~~~~~~~~~~~~
Hg2    ID: Seq. 00001          Seq. No.: 00001    A/S Pos.: --    Date: 10/08/ 7

Replicate  1                              Time: 09:47
Peak Area (A-s): -0.026                   Peak Height (A): -0.001
Blank Corrected Pk Height (A): -0.001
Concentration (ug/L  ): -0.061

Auto-zero performed.
~~~~~~~~~~~~~~~~~~~~~~~~~~~~~~~~~~~~~~~~~~~~~~~~~~~~~~~~~~~~~~~~~~~~~~~~~~~~~
Hg2    ID: Seq. 00002          Seq. No.: 00002    A/S Pos.: --    Date: 10/08/9

Replicate  1                              Time: 09:49
Peak Area (A-s): 0.036                    Peak Height (A): 0.002
Blank Corrected Pk Height (A): 0.002
Concentration (ug/L  ): 0.074

Auto-zero performed.
~~~~~~~~~~~~~~~~~~~~~~~~~~~~~~~~~~~~~~~~~~~~~~~~~~~~~~~~~~~~~~~~~~~~~~~~~~~~~
Hg2    ID: STD BLK             Seq. No.: 00003    A/S Pos.: --    Date: 10/08/9

Replicate  1                              Time: 09:52
Peak Area (A-s): -0.000                   Peak Height (A): -0.000
Blank Corrected Pk Height (A): -0.000
Concentration (ug/L  ): -0.009

Auto-zero performed.
~~~~~~~~~~~~~~~~~~~~~~~~~~~~~~~~~~~~~~~~~~~~~~~~~~~~~~~~~~~~~~~~~~~~~~~~~~~~~
Hg2    ID: STD1=0.2ug/L        Seq. No.: 00004    A/S Pos.: --    Date: 10/08/9

Sample abs. is greater than that of the largest standard.
Replicate  1                              Time: 09:54
Peak Area (A-s): 0.166                    Peak Height (A): 0.008
Blank Corrected Pk Height (A): 0.008
Concentration (ug/L  ): 0.330

Standard number 1 applied.  [0.200]
Correlation coefficient: 1.00000          Slope: 0.0381
~~~~~~~~~~~~~~~~~~~~~~~~~~~~~~~~~~~~~~~~~~~~~~~~~~~~~~~~~~~~~~~~~~~~~~~~~~~~~
Hg2    ID: STD2=0.5ug/L        Seq. No.: 00005    A/S Pos.: --    Date: 10/08/97

Replicate  1                              Time: 09:55
Peak Area (A-s): -0.005                   Peak Height (A): 0.000
Blank Corrected Pk Height (A): 0.000
Concentration (ug/L  ): 0.000
```

~~~
~~~

Element File: HG_.MEL	Element: Hg2	Wavelength: 253.7
Date: 10/08/97	Time: 10:06	Slit: 0.7 L
Data File: AB816.DAT	ID/Wt File: AB816.IDW	Lamp Current: 0
Technique: MHS	Calib. Type: Linear	Energy: 71

Remark 1: STANDARDS= 3-020-3
Remark 2: QC= 3-020-4

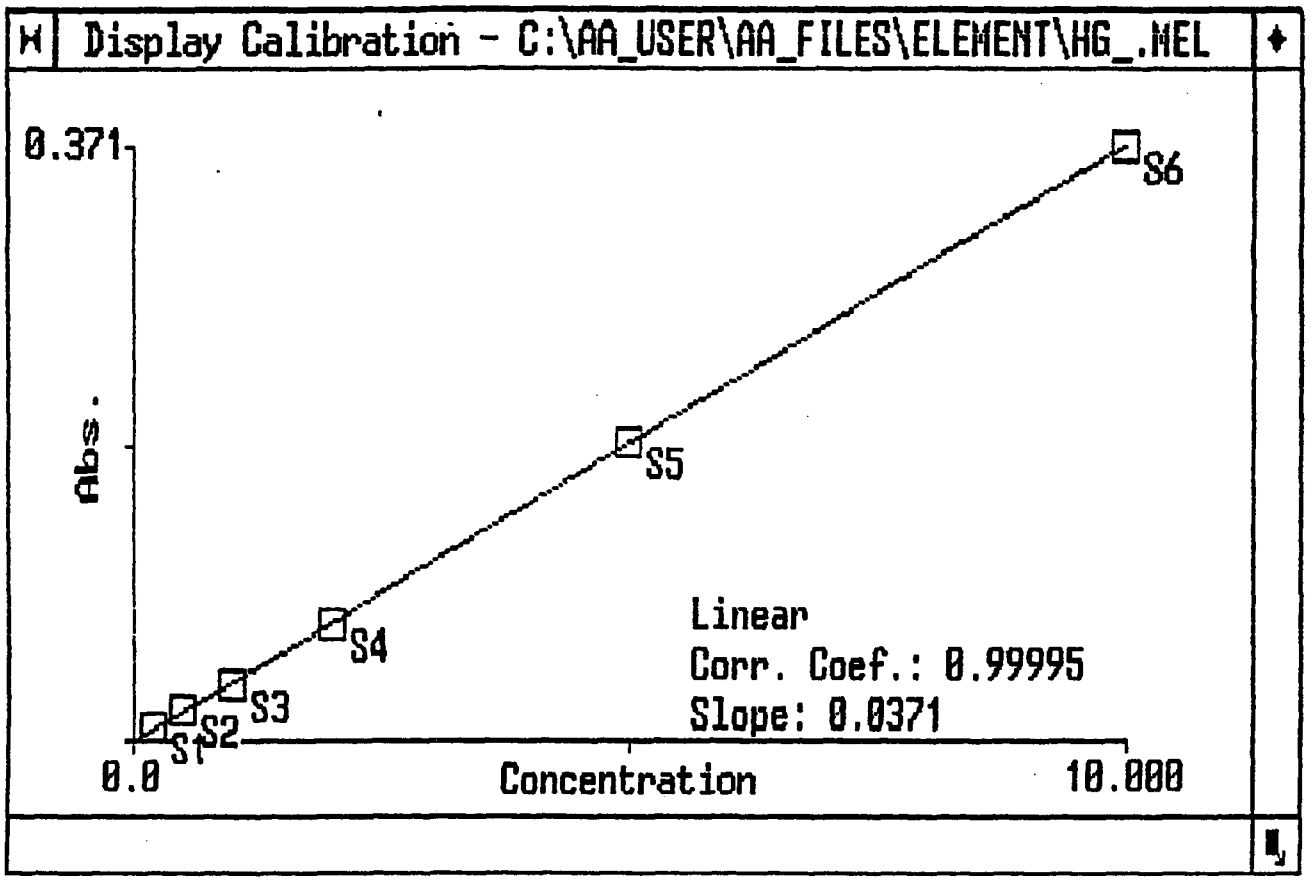

Hg2 ID: ICV=4.0ug/L Seq. No.: 00011 A/S Pos.: -- Date: 10/08/97

Replicate 1 Time: 10:09
Peak Area (A-s): 3.457 Peak Height (A): 0.151
Blank Corrected Pk Height (A): 0.151
Concentration (ug/L): 4.078

Hg2 ID: ICB Seq. No.: 00012 A/S Pos.: -- Date: 10/08/97

Replicate 1 Time: 10:10
Peak Area (A-s): 0.008 Peak Height (A): 0.000
Blank Corrected Pk Height (A): 0.000
Concentration (ug/L): 0.005

Hg2 ID: CHECK LO Seq. No.: 00013 A/S Pos.: -- Date: 10/08/97

Replicate 1 Time: 10:12
Peak Area (A-s): 0.173 Peak Height (A): 0.007
Blank Corrected Pk Height (A): 0.007
Concentration (ug/L): 0.200

Hg2 ID: 43231 MB~~4~~5 11-4-97 EE Seq. No.: 00014 A/S Pos.: -- Date: 10/08/97

Replicate 1 Time: 10:13
Peak Area (A-s): 0.014 Peak Height (A): 0.000
Blank Corrected Pk Height (A): 0.000
Concentration (ug/L): 0.008

Hg2 ID: 43231 MB~~4~~5 D 11-4-97 EE Seq. No.: 00015 A/S Pos.: -- Date: 10/08/97

Replicate 1 Time: 10:14
Peak Area (A-s): 0.016 Peak Height (A): 0.001
Blank Corrected Pk Height (A): 0.001
Concentration (ug/L): 0.030

Hg2 ID: 43231 LCS~~4~~5 11-4-97 EE Seq. No.: 00016 A/S Pos.: -- Date: 10/08/97

Replicate 1 Time: 10:16
Peak Area (A-s): 4.642 Peak Height (A): 0.205
Blank Corrected Pk Height (A): 0.205
Concentration (ug/L): 5.526

Hg2 ID: 43231 LCS~~4~~5 D 11-4-97 EE Seq. No.: 00017 A/S Pos.: -- Date: 10/08/97

Replicate 1 Time: 10:17
Peak Area (A-s): 4.397 Peak Height (A): 0.188
Blank Corrected Pk Height (A): 0.188
Concentration (ug/L): 5.053

Hg2 ID: 184-2~~5~~3-5, 10AB, 183-15-18 Seq. No.: 00018 A/S Pos.: -- Date: 10/08/97
11-4-97 EE 11-4-97 EE

Replicate 1 Time: 10:18
Peak Area (A-s): 0.024 Peak Height (A): 0.001
Blank Corrected Pk Height (A): 0.001
Concentration (ug/L): 0.035

~~~
~~~

Concentration (ug/L): 0.019

~~~
~~~

Hg2 ID: CCB2 Seq. No.: 00033 A/S Pos.: -- Date: 10/08/9

Replicate 1 Time: 10:34
Peak Area (A-s): -0.006 Peak Height (A): 0.000
Blank Corrected Pk Height (A): 0.000
Concentration (ug/L): 0.000

Hg2 ID: 43271 MB1 Seq. No.: 00034 A/S Pos.: -- Date: 10/08/

Replicate 1 Time: 10:35
Peak Area (A-s): -0.007 Peak Height (A): -0.000
Blank Corrected Pk Height (A): -0.000
Concentration (ug/L): -0.003

Hg2 ID: 43271 MB1 D Seq. No.: 00035 A/S Pos.: -- Date: 10/08/9

Replicate 1 Time: 10:36
Peak Area (A-s): -0.014 Peak Height (A): -0.000
Blank Corrected Pk Height (A): -0.000
Concentration (ug/L): -0.011

Hg2 ID: 43271 LCS1 Seq. No.: 00036 A/S Pos.: -- Date: 10/08/

Replicate 1 Time: 10:37
Peak Area (A-s): 4.426 Peak Height (A): 0.192
Blank Corrected Pk Height (A): 0.192
Concentration (ug/L): 5.175

Hg2 ID: 43271 LCS1 Seq. No.: 00037 A/S Pos.: -- Date: 10/08/97

Replicate 1 Time: 10:38
Peak Area (A-s): 4.192 Peak Height (A): 0.182
Blank Corrected Pk Height (A): 0.182
Concentration (ug/L): 4.913

Hg2 ID: 183-43-1AB Seq. No.: 00038 A/S Pos.: -- Date: 10/08/97

Replicate 1 Time: 10:39
Peak Area (A-s): 0.033 Peak Height (A): 0.001
Blank Corrected Pk Height (A): 0.001
Concentration (ug/L): 0.035

Hg2 ID: 183-43-1AB D Seq. No.: 00039 A/S Pos.: -- Date: 10/08/9

Replicate 1 Time: 10:41
Peak Area (A-s): 0.017 Peak Height (A): 0.001
Blank Corrected Pk Height (A): 0.001
Concentration (ug/L): 0.030

Hg2 ID: 183-43-1C Seq. No.: 00040 A/S Pos.: -- Date: 10/08/97

ID/Weight File: AB818.IDW
Sample Volume: 100 mL

Analyst: RICHARDS
Nominal Weight: 1.0 g

tlg

Loc.	Sample ID	Weight	Dilution
0	STD BLK	-	
1	STD1=0.2ug/L		
2	STD2=0.5ug/L	3-020-7	mc 10/10/97
3	STD3=1.0ug/L		
4	STD4=2.0ug/L		
5	STD5=5.0ug/L		
6	STD6=10.0ug/L	3-020-8	mc 10/10/97
7	ICV=4.0ug/L		
8	ICB		
9	CHECK LO (okay)		
10	43271 MB$ 11-4-97 cc		
11	43271 MB$ D		
12	43271 LCS$		
13	43271 LCS$ D		
14	183-43-8AB		
15	183-43-8AB D		
16	183-43-8C		
17	183-43-8C D		
18	183-43-8C MS		
19	183-43-8C MSD		
20	CCV1=6.0ug/L	3-020-8	mc 10/10/97
21	CCB1		
22	183-43-8D		
23	183-43-8D D		
24	183-43-8E		
25	183-43-8E D		
26	183-43-8F		
27	183-43-8F D		
28	183-43-9AB		
29	183-43-9AB D		
30	183-43-9C		
31	183-43-9C D		
32	CCV2=6.0ug/L	3-020-8	mc 10/10/97
33	CCB2		
34	183-43-9D		
35	183-43-9D D		
36	183-43-9E		
37	183-43-9E D		
38	183-43-9F		
39	183-43-9F D		
40	183-43-10AB		
41	183-43-10AB D		
42	183-43-10C		
43	183-43-10C D		
44	CCV3=6.0ug/L	3-020-8	mc 10/10/97
45	CCB3		
46	183-43-10D		
47	183-43-10D D		
48	183-43-10E		
49	183-43-10E D		
50	183-43-10F		
51	183-43-10F D		
52	183-43-11C		
53	183-43-11C D		

Loc.	Sample ID	Weight	Dilution
54	183-43-11C MS		
55	183-43-11C MSD		
56	CCV4=6.0ug/L	3-020-8 mr 10/10/97	
57	CCB4		
58	183-43-11AB		
59	183-43-11AB D		
60	CCV5=6.0ug/L	3-020-8 mr 10/10/97	
61	CCB5		
62	43231 MB5		
63	43231 MB5 D		
64	43231 LCS5		
65	43231 LCS5 D		
66	183-3-1BC		
67	183-3-1BC D		
68	183-3-1BC MS		
69	183-3-1BC MSD		
70	183-3-5BC		
71	183-3-5BC D		
72	CCV6=6.0ug/L	3-020-8 mr 10/10/97	
73	CCB6		

6 11-4-97 ec

Element File: HG_.MEL
Element: Hg2
Print Data: Main+Suppl.
Print: Calib. Curve
Remarks:
STANDARDS= 3-020-7
QC= 3-020-8

Analyst: RICHARDS
Peak Storage: None

10/10/97 MR

INSTRUMENT: 5100
Wavelength: 253.7 Peak
Signal Type: AA
Read Time: 30.0
Sample Replicates: 1
Standard Replicates: 1

Technique: MHS
Slit: 0.7 Low
Signal Measurement: Peak Height (5)
Read Delay: 1.0

Version: 7.01
BOC Time: 2

FLAME:
Flame Type: Air
Oxidant Flow: 10.0 L/min

Flame Sensor: On
Fuel Flow: 2.0 L/min

CALIBRATION:

Solutions	ID	Conc
Calib. Blank	STD BLK	
Standard 1	STD 1	0.200
Standard 2	STD 2	0.500
Standard 3	STD 3	1.000
Standard 4	STD 4	2.000
Standard 5	STD 5	5.000
Standard 6	STD 6	10.000

Calibration Units: ug/L
Calibration Type: Linear

Sample Units: ug/L

QC:
Matrix Check Calculations:
% Difference for Dupls: No Locations:
% Recovery for Spike: No Locations: Conc:

Element File: HG_.MEL Element: Hg2 Wavelength: 253.7
Date: 10/10/97 Time: 13:51 Slit: 0.7 L
Data File: AB818.DAT ID/Wt File: AB818.IDW Lamp Current: 0
Technique: MHS Calib. Type: Linear Energy: 71
Remark 1: STANDARDS= 3-020-7
Remark 2: QC= 3-020-8

Hg2 ID: STD BLK Seq. No.: 00003 A/S Pos.: -- Date: 10/10/97

Replicate 1 Time: 13:52
Peak Area (A-s): -0.004 Peak Height (A): -0.000
Blank Corrected Pk Height (A): -0.000
Concentration (ug/L): -0.005

Auto-zero performed.

Hg2 ID: STD1=0.2ug/L Seq. No.: 00004 A/S Pos.: -- Date: 10/10/97

Replicate 1 Time: 13:53
Peak Area (A-s): 0.158 Peak Height (A): 0.006
Blank Corrected Pk Height (A): 0.006
Concentration (ug/L): 0.171

Standard number 1 applied. [0.200]
Correlation coefficient: 1.00000 Slope: 0.0321

Hg2 ID: STD2=0.5ug/L Seq. No.: 00005 A/S Pos.: -- Date: 10/10/97

Sample abs. is greater than that of the largest standard.
Replicate 1 Time: 13:54
Peak Area (A-s): 0.434 Peak Height (A): 0.018
Blank Corrected Pk Height (A): 0.018
Concentration (ug/L): 0.566

Standard number 2 applied. [0.500]
Correlation coefficient: 0.99467 Slope: 0.0358

Hg2 ID: STD3=1.0ug/L Seq. No.: 00006 A/S Pos.: -- Date: 10/10/97

Sample abs. is greater than that of the largest standard.
Replicate 1 Time: 13:55
Peak Area (A-s): 0.853 Peak Height (A): 0.035
Blank Corrected Pk Height (A): 0.035
Concentration (ug/L): 0.989

Standard number 3 applied. [1.000]
Correlation coefficient: 0.99923 Slope: 0.0355

Hg2 ID: STD4=2.0ug/L Seq. No.: 00007 A/S Pos.: -- Date: 10/10/97

Sample abs. is greater than that of the largest standard.
Replicate 1 Time: 13:56
Peak Area (A-s): 1.762 Peak Height (A): 0.075

Blank Corrected Pk Height (A): 0.075
Concentration (ug/L): 2.100

Standard number 4 applied. [2.000]
Correlation coefficient: 0.99926 Slope: 0.0369

~~~
~~~

Element File: HG_.MEL	Element: Hg2	Wavelength: 253.7
Date: 10/10/97	Time: 13:59	Slit: 0.7 L
Data File: A8818.DAT	ID/Wt File: A8818.IDW	Lamp Current: 0
Technique: MHS	Calib. Type: Linear	Energy: 71

Remark 1: STANDARDS= 3-020-7
Remark 2: QC= 3-020-8

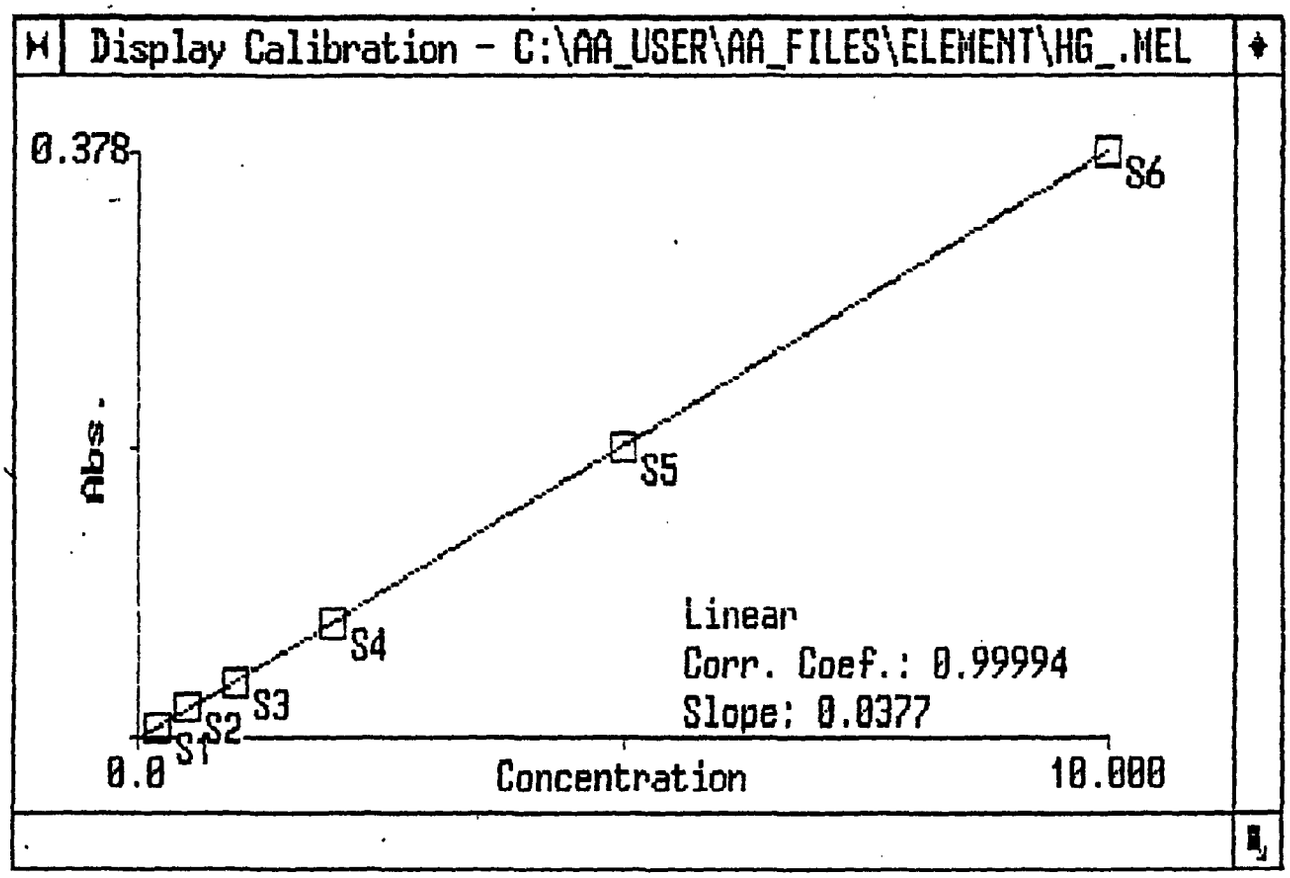

Element File: HG_.MEL
Date: 10/10/97
Data File: AB818.DAT
Technique: MHS
Remark 1: STANDARDS= 3-020-7
Remark 2: QC= 3-020-8

Element: Hg2
Time: 14:01
ID/Wt File: AB818.IDW
Calib._Type: Linear

Wavelength: 253.7
Slit: 0.7 L
Lamp Current: 0
Energy: 71

Hg2 ID: ICV=4.0ug/L Seq. No.: 00010 A/S Pos.: -- Date: 10/10/97

Replicate 1 Time: 14:02
Peak Area (A-s): 3.624 Peak Height (A): 0.158
Blank Corrected Pk Height (A): 0.158
Concentration (ug/L): 4.204

Hg2 ID: ICB Seq. No.: 00011 A/S Pos.: -- Date: 10/10/97

Replicate 1 Time: 14:03
Peak Area (A-s): 0.023 Peak Height (A): 0.001
Blank Corrected Pk Height (A): 0.001
Concentration (ug/L): 0.035

Hg2 ID: CHECK LO Seq. No.: 00012 A/S Pos.: -- Date: 10/10/97

Replicate 1 Time: 14:05
Peak Area (A-s): 0.188 Peak Height (A): 0.008
Blank Corrected Pk Height (A): 0.008
Concentration (ug/L): 0.200

Hg2 ID: 43271 MB3 Seq. No.: 00013 A/S Pos.: -- Date: 10/10/97

Replicate 1 Time: 14:10
Peak Area (A-s): 0.000 Peak Height (A): 0.000
Blank Corrected Pk Height (A): 0.000
Concentration (ug/L): 0.000

Hg2 ID: 43271 MB3 D Seq. No.: 00014 A/S Pos.: -- Date: 10/10/97

Replicate 1 Time: 14:11
Peak Area (A-s): 0.010 Peak Height (A): 0.000
Blank Corrected Pk Height (A): 0.000
Concentration (ug/L): 0.008

Hg2 ID: 43271 LCS3 Seq. No.: 00015 A/S Pos.: -- Date: 10/10/97

Replicate 1 Time: 14:12
Peak Area (A-s): 5.031 Peak Height (A): 0.234
Blank Corrected Pk Height (A): 0.234
Concentration (ug/L): 6.198

Hg2 ID: 43271 LCS3 D Seq. No.: 00016 A/S Pos.: -- Date: 10/10/97

Replicate 1 Time: 15:04
Peak Area (A-s): 3.869 Peak Height (A): 0.171
Blank Corrected Pk Height (A): 0.171
Concentration (ug/L): 4.529

Hg2 ID: CCV4=6.0ug/L Seq. No.: 00061 A/S Pos.: -- Date: 10/10/97

Replicate 1 Time: 15:06
Peak Area (A-s): 4.236 Peak Height (A): 0.189
Blank Corrected Pk Height (A): 0.189
Concentration (ug/L): 5.024

Hg2 ID: CCB4 Seq. No.: 00062 A/S Pos.: -- Date: 10/10/97

Replicate 1 Time: 15:07
Peak Area (A-s): 0.011 Peak Height (A): 0.001
Blank Corrected Pk Height (A): 0.001
Concentration (ug/L): 0.019

Hg2 ID: 183-43-11AB Seq. No.: 00063 A/S Pos.: -- Date: 10/10/97

Replicate 1 Time: 15:08
Peak Area (A-s): -0.004 Peak Height (A): 0.000
Blank Corrected Pk Height (A): 0.000
Concentration (ug/L): 0.000

Hg2 ID: 183-43-11AB D Seq. No.: 00064 A/S Pos.: -- Date: 10/10/97

Replicate 1 Time: 15:11
Peak Area (A-s): -0.004 Peak Height (A): 0.001
Blank Corrected Pk Height (A): 0.001
Concentration (ug/L): 0.016

Hg2 ID: CCV5=6.0ug/L Seq. No.: 00065 A/S Pos.: -- Date: 10/10/97

Replicate 1 Time: 15:12
Peak Area (A-s): 4.880 Peak Height (A): 0.208
Blank Corrected Pk Height (A): 0.208
Concentration (ug/L): 5.527

Hg2 ID: CCB5 Seq. No.: 00066 A/S Pos.: -- Date: 10/10/97

Replicate 1 Time: 15:12
Peak Area (A-s): 0.007 Peak Height (A): 0.000
Blank Corrected Pk Height (A): 0.000
Concentration (ug/L): 0.011

Hg2 ID: 43231 MB Seq. No.: 00067 A/S Pos.: -- Date: 10/10/97

Replicate 1 Time: 15:13
Peak Area (A-s): 0.003 Peak Height (A): -0.000
Blank Corrected Pk Height (A): -0.000

Concentration (ug/L): -0.003

Hg2 ID: 43231 MB$ D Seq. No.: 00068 A/S Pos.: -- Date: 10/10/97

Replicate 1 Time: 15:14
Peak Area (A-s): 0.000 Peak Height (A): 0.000
Blank Corrected Pk Height (A): 0.000
Concentration (ug/L): 0.000

Hg2 ID: 43231 LCS$ Seq. No.: 00069 A/S Pos.: -- Date: 10/10/97

Replicate 1 Time: 15:15
Peak Area (A-s): 3.900 Peak Height (A): 0.172
Blank Corrected Pk Height (A): 0.172
Concentration (ug/L): 4.574

Hg2 ID: 43231 LCS$ D Seq. No.: 00070 A/S Pos.: -- Date: 10/10/97

Replicate 1 Time: 15:16
Peak Area (A-s): 4.077 Peak Height (A): 0.185
Blank Corrected Pk Height (A): 0.185
Concentration (ug/L): 4.912

Hg2 ID: 183-3-1BC Seq. No.: 00071 A/S Pos.: -- Date: 10/10/97

Replicate 1 Time: 15:17
Peak Area (A-s): 0.017 Peak Height (A): 0.001
Blank Corrected Pk Height (A): 0.001
Concentration (ug/L): 0.013

Hg2 ID: 183-3-1BC D Seq. No.: 00072 A/S Pos.: -- Date: 10/10/97

Replicate 1 Time: 15:18
Peak Area (A-s): 0.002 Peak Height (A): 0.000
Blank Corrected Pk Height (A): 0.000
Concentration (ug/L): 0.005

Hg2 ID: 183-3-1BC MS Seq. No.: 00073 A/S Pos.: -- Date: 10/10/97

Replicate 1 Time: 15:20
Peak Area (A-s): 4.103 Peak Height (A): 0.182
Blank Corrected Pk Height (A): 0.182
Concentration (ug/L): 4.827

Hg2 ID: 183-3-1BC MSD Seq. No.: 00074 A/S Pos.: -- Date: 10/10/97

Replicate 1 Time: 15:20
Peak Area (A-s): 3.914 Peak Height (A): 0.174
Blank Corrected Pk Height (A): 0.174
Concentration (ug/L): 4.619

Hg2 ID: 183-3-5BC Seq. No.: 00075 A/S Pos.: -- Date: 10/10/97

Replicate 1 Time: 15:22
Peak Area (A-s): 0.007 Peak Height (A): 0.000
Blank Corrected Pk Height (A): 0.000
Concentration (ug/L): 0.003

Hg2 ID: 183-3-5BC D Seq. No.: 00076 A/S Pos.: -- Date: 10/10/9

Replicate 1 Time: 15:22
Peak Area (A-s): 0.002 Peak Height (A): 0.000
Blank Corrected Pk Height (A): 0.000
Concentration (ug/L): 0.005

Hg2 ID: CCV6=6.0ug/L Seq. No.: 00077 A/S Pos.: -- Date: 10/10/97

Replicate 1 Time: 15:23
Peak Area (A-s): 5.364 Peak Height (A): 0.232
Blank Corrected Pk Height (A): 0.232
Concentration (ug/L): 6.150

Hg2 ID: CCB6 Seq. No.: 00078 A/S Pos.: -- Date: 10/10/9

Replicate 1 Time: 15:25
Peak Area (A-s): 0.009 Peak Height (A): 0.000
Blank Corrected Pk Height (A): 0.000
Concentration (ug/L): 0.008

TECHNICAL REPORT DATA

Please read instructions on the reverse before completing

1. REPORT NO. EPA-454/R-99-017A	2.	3. RECIPIENT'S ACCESSION NO.
4. TITLE AND SUBTITLE Final Report - Iron and Steel Foundries Manual Emissions Testing of Cupola Baghouse at Waupaca Foundry in Tell City, Indiana Volume I of II		5. REPORT DATE June 1999 6. PERFORMING ORGANIZATION CODE
7. AUTHOR(S) Franklin Meadows Daniel F. Scheffel		8. PERFORMING ORGANIZATION REPORT NO.
9. PERFORMING ORGANIZATION NAME AND ADDRESS Pacific Environmental Services, Inc. Post Office Box 12077 Research Triangle Park, North Carolina 27709-2077		10. PROGRAM ELEMENT NO. 11. CONTRACT/GRANT NO. 68-D-70069
12. SPONSORING AGENCY NAME AND ADDRESS U.S. Environmental Protection Agency Office of Air Quality Planning and Standards Emissions, Monitoring and Analysis Division Research Triangle Park, North Carolina 27711		13. TYPE OF REPORT AND PERIOD COVERED Final 14. SPONSORING AGENCY CODE
15. SUPPLEMENTARY NOTES		

16. ABSTRACT

The United States Environmental Protection Agency (EPA) is investigating iron and steel foundries to identify and quantify hazardous air pollutants (HAPs) emitted from cupolas; electric arc furnaces; and pouring, cooling and shakedown operations of sand mold casting processes. The Waupaca Foundry in Tell City, Indiana was selected by the EPA as the host facility at which to 1) characterize HAP emissions from cupolas that are controlled by baghouses, and 2) assess baghouse performance in controlling HAP emissions from cupolas. The Waupaca Foundry was selected because EPA deemed this facility to be representative of a large segment of the sand casting foundry industry. Waupaca Foundry operates a large cupola (50 standard tons per hour melting capacity) that is controlled by a negative pressure baghouse. The new facility recently began production and the modern design of the cupola baghouse was expected to be as effective as any used in this type of application.

This report presents the results of a manual emissions testing program to characterize emissions from a cupola and assess the performance of the baghouse in controlling HAP emissions. Testing was conducted at the cupola baghouse inlet and outlet to determine air emissions of particulate matter (PM) and metal HAPs; and at the cupola baghouse outlet to determine organic HAPs consisting of dibenzo-*p*-dioxins and polychlorinated dibenzodurans (PCDDs/PCDFs), and semi-volatile organic hazardous air pollutnats (SVOHAPs). The data may be used by the EPA as potential Maximum Achievable Control Technology (MACT) floor technology for cupolas.

During the testing program, Research Triangle Institute (RTI), another EPA contractor, monitored and recorded process and emission control system operating parameters, and prepared Section 3.0, Process and Control Equipment operation, of this report.

This volume (Volume I) is comprised of 569 pages and consists of the report text, and Appendices: A (Raw field Data), and B (Analytical Data - Particulate Matter and Metals).

17. KEY WORDS AND DOCUMENT ANALYSIS

a. DESCRIPTIONS	b. IDENTIFIERS/OPEN ENDED TERMS	c. COASTI Field/Group
Baghouse Cupola Dioxins/Furans Emission Measurements Hazardous Air Pollutants Metals Particulate Matter Semi-volatile Organic Hazardous Pollutants		

18. DISTRIBUTION STATEMENT Unlimited	19. SECURITY CLASS *(This Report)* Unclassified	21. NO. OF PAGES 1,066
	20. SECURITY CLASS *(This page)* Unclassified	22. PRICE