PB 198 065

CHEMILUMINESCENT OZONE METER FOR CONTINOUS AIR MONITORING PROJECT

J. B. Tommerdahl, et al

Research Triangle Institute
Research Triangle Park, North Carolina

January 1971

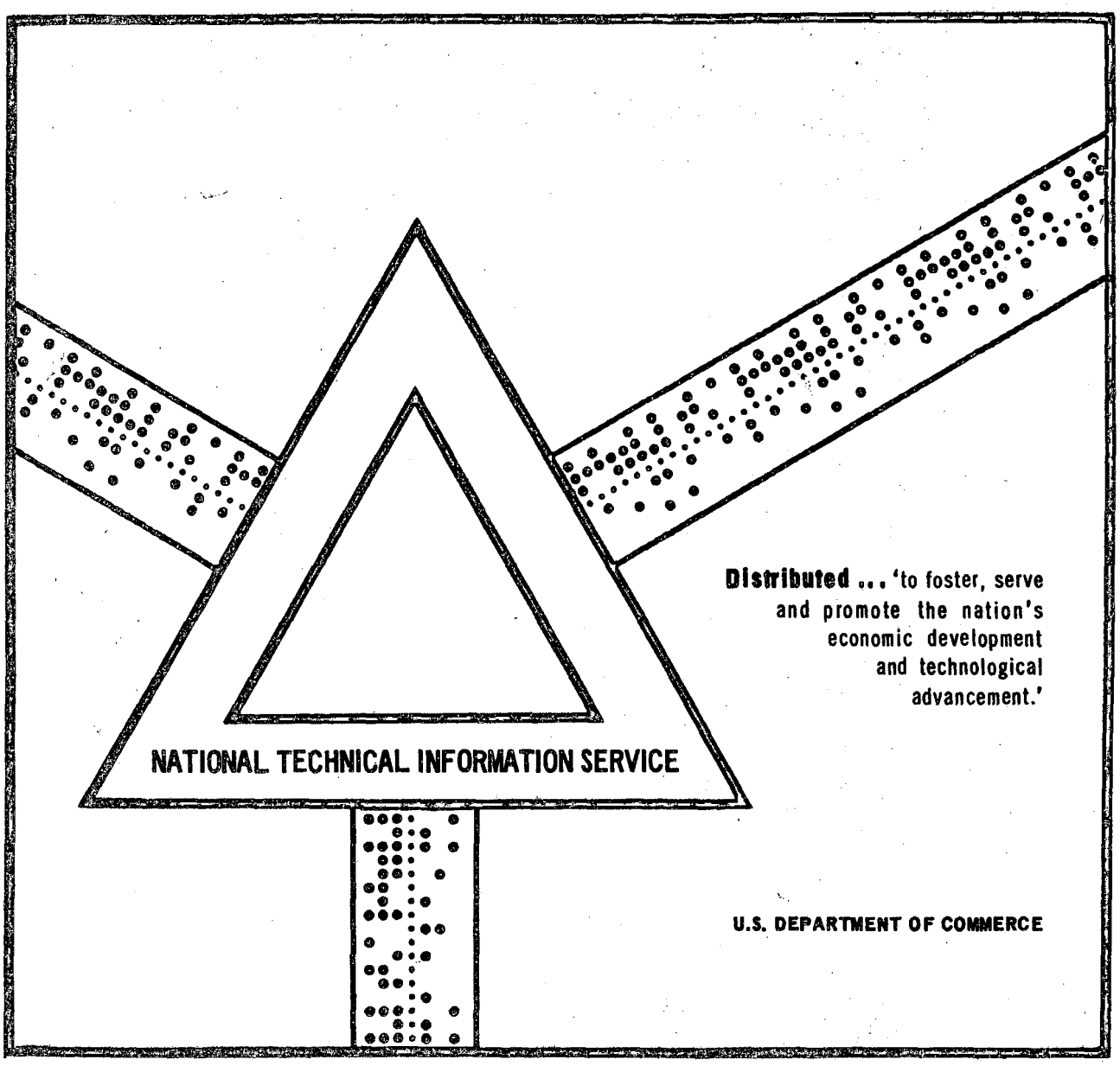

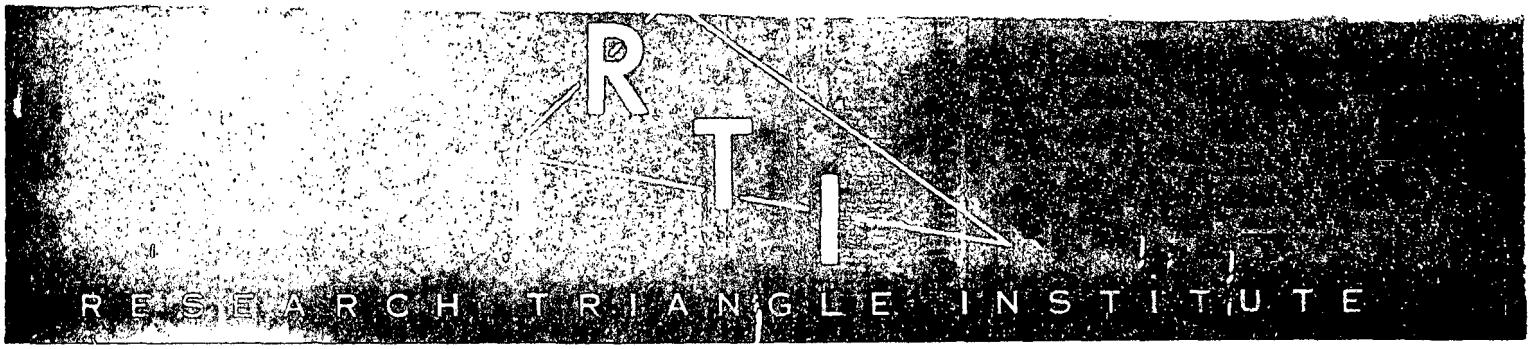

FINAL REPORT

and

INSTRUCTION MANUAL

CHEMILUMINESCENT OZONE METER

for

CONTINUOUS AIR MONITORING PROJECT

J. B. Tommerdahl
R. B. Strong
A. H. Truckner

January 1971

Prepared for

AIR POLLUTION CONTROL OFFICE

Contract No. CPA 70-27

Engineering and Environmental Sciences Division
Engineering Physics Department

RESEARCH TRIANGLE PARK, NORTH CAROLINA 27709

BIBLIOGRAPHIC DATA SHEET	1. Report No. APTD-0634	2.	3. Recipient's Accession No.
4. Title and Subtitle: Chemiluminescent Ozone Meter for Continuous Air Monitoring Project			5. Report Date: January 1971 6.
7. Author(s): J.B. Tommerdahl, R.B. Strong, A.H. Truckner			8. Performing Organization Rept. No.
9. Performing Organization Name and Address: Engineering and Environmental Sciences ~~Division~~ Dept. Engineering Physics Department, Research Triangle Institute Research Triangle Park, N. C. 27709			10. Project/Task/Work Unit No. 11. Contract/Grant No. CPA 70-27
12. Sponsoring Organization Name and Address: EPA, Air Pollution Control Office Technical Center Research Triangle Park, N. C. 27709			13. Type of Report & Period Covered: Final 14.

15. Supplementary Notes

16. Abstract

~~This~~ report describes the results of a program to design, construct, calibrate and field test an Ozone-specific instrument using a chemiluminescent principle. ~~This~~ document is also ~~as~~ used an instruction manual, with two separate attachments included; a set of engineering drawings for the machine shop fabricated parts and a subsystem manual comprised of instruction sheets and manuals for the individual commercially procured units.

17. Key Words and Document Analysis. 17a. Descriptors

Ozone
Measuring instruments
Monitors
Chemiluminescence
Manuals

17b. Identifiers/Open-Ended Terms

Continuous air monitoring program

17c. COSATI Field/Group 13/B

18. Availability Statement: Unlimited	19. Security Class (This Report): UNCLASSIFIED	21. No. of Pages: 64
	20. Security Class (This Page): UNCLASSIFIED	22. Price

This report was furnished to the Air Pollution Control Office in fulfillment of Contract No. CPA 70-27 by the Research Triangle Institute.

CHEMILUMINESCENT OZONE METER

Model EU-525-08

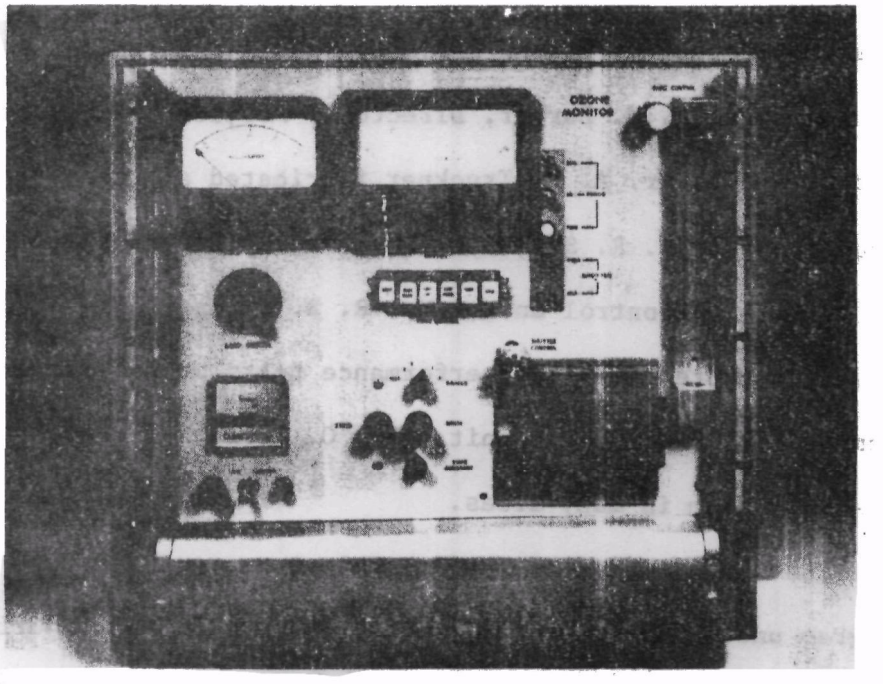

Engineering and Environmental Sciences Division
Research Triangle Institute
Post Office Box 12194
Research Triangle Park, North Carolina 27709

FOREWORD

This report describes the results of a program to design, construct calibrate and field test an ozone-specific instrument using a chemiluminescent principle. The work has been monitored by Mr. E. R. Lozano and Mr. Frank McElroy, Air Pollution Control Office.

The work was performed in the Engineering and Environmental Sciences Division, Dr. R. M. Burger, Director. Project Leader was Mr. J. B. Tommerdahl. Mr. A. H. Truckner fabricated and tested the basic instrument. Mr. S. R. Stilley wired the amplifier, signal conditioner and timing/control unit. Mr. R. B. Strong calibrated the system and conducted detailed performance tests on the system, amplifier and signal conditioner unit. Mr. C. E. Decker contributed to the overall program in many areas.

Some of the basic design of the instrument was carried out under a program under contract with the Air Pollution Control Office (Contract CPA-22-69-7).

INSTRUMENT IDENTIFICATION AND SPECIFICATIONS

Ozone Meter: Model EU-525

Serial No. 525-08

Photomultiplier Tube:

Type - EMI-9558C

Serial No. 20175

HV 1090

Gain = 200 A/L

Dark Current = 0.8 nA (Mfg. Rating)

Dark Current = 1.5 nA (Measured)

HV Supply: Power Design Model 2K-10

Serial No. 002066

Air Flow Setting: 69

12 vdc Supply: Deltron Model C12-2.8

Serial No. 41605

±15 vdc Supply: HP Model 60155C

Serial No. 961039

TABLE OF CONTENTS

Section		Page
1.0	INTRODUCTION	1
2.0	OZONE METER FUNCTIONAL AND OPERATIONAL CHARACTERISTICS	3
2.1	Theory of Operation	3
2.2	Functional Description	3
2.3	Physical Description	6
2.4	Instrument Specifications	8
2.5	Front Panel Controls and Indicators	9
3.0	DETAILED SYSTEM DESCRIPTION	15
3.1	General	15
3.2	Plumbing Subsystem	15
3.3	Detector	19
3.4	Calibration Unit	26
3.5	Timing and Control Unit	33
3.6	Linear Amplifier	36
3.7	Signal Conditioner	43

APPENDICES

A. INSTALLATION AND OPERATION

B. MAINTENANCE, CALIBRATION AND ADJUSTMENT PROCEDURES

C. PARTS LIST

D. SUBSYSTEM MANUALS

E. ENGINEERING DRAWINGS

LIST OF FIGURES

Figure		Page
1	OZONE METER FUNCTIONAL DIAGRAM	4
2	FRONT PANEL VIEW OF OZONE METER (WITH HV POWER SUPPLY COVER REMOVED)	7
3	REAR PANEL VIEW OF OZONE METER	10
4	MAIN CHASSIS LAYOUT	11
5(a) (b)	TOP AND REAR VIEW OF CHASSIS	12
(c) (d)	LEFT AND RIGHT SIZE VIEWS OF CHASSIS	13
6	AC AND DC POWER DISTRIBUTION	14
7	PLUMBING SUBSYSTEM	16
8	PLUMBING SUBSYSTEM PARTS LAYOUT	17
9	DETECTOR ASSEMBLY	20
10	AIR FLOW PATTERN IN DISC CHAMBER	21
11	PM TUBE HOUSING WIRING DIAGRAM	23
12	INTERLOCK CIRCUIT	27
13	CALIBRATION UNIT (TOP VIEW)	28
14	OZONE CONCENTRATION VERSUS APERTURE SETTING	29
15	OZONE CONCENTRATION AS A FUNCTION OF LAMP CURRENT AND FLOW RATE	31
16	CALIBRATION LAMP CURRENT VERSUS LAMP VOLTAGE	32
17	CALIBRATION UNIT, IN SITU CALIBRATION	34
18	TIMING CONTROL CIRCUIT	35
19	PHOTOMULTIPLIER TUBE LINEAR AMPLIFIER	37
20	AMPLIFIER OUTPUT VOLTAGE VERSUS INPUT CURRENT FOR LINEAR RANGES	39

Figure		Page
21	FREQUENCY RESPONSE OF AMPLIFIER FOR VARIOUS GAIN SETTINGS	41
22	AMPLIFIERS 10^{-7} AMP FULL SCALE, OUTPUT SENSITIVITY XI	42
23	SIGNAL AND TIMING WAVEFORMS	44
24	BASIC SIGNAL CONDITIONING CIRCUIT	45
25	SIGNAL CONDITIONER CIRCUIT	47

1.0 INTRODUCTION

The Research Triangle Institute has, under Contract CPA 70-27 with the Air Pollution Control Office, conducted a program to design, construct, calibrate, and field test an ozone-specific instrument using a chemiluminescent principle; the unit is intended, ultimately, for CAMP stations.

This document is a combined final report for the project and an instruction manual for the ozone instrument, since a majority of the information is pertinent to both. Two separate attachements complete the documentation; these are a set of engineering drawings for the machine shop fabricated parts and a subsystem manual comprised of instruction sheets and manuals for the individual commercially procured units such as the high voltage supply and PM tube housing. Thus this is, in general, a comprehensive engineering description of the design, construction details, calibration techniques and operational characteristics of the ozone monitor. Material essential in an instruction manual has been expanded, particularly with respect to the design, testing, and operational characteristics.

The ozone meter developed operates on the chemiluminescent principle. When ozone reacts with certian organic compounds, the reaction produces a minute luminescence in the 5800 Å region which can be measured by means of a sensitive photomultiplier tube and dc amplifier. The chemiluminesence principle for ozone measurement has the advantage of being essentially specific for ozone for the expected concentrations of other pollutants.

The ozone meter was designed as a laboratory instrument for the purpose of evaluating its performance in a NASN CAMP station environment;

the meter is considerably more sophisticated in design than would be necessary for a meter that is designed as a production unit. This versatility in design provides for a wide latitude of test conditions.

A functional description of the ozone monitor is given in Section 2.0; and a detailed description of the design for the various sub-assemblies are presented in Section 3.0. Various details concerning parts list, installation and maintenance of the instrument, calibration procedures, and operation procedures are included in the respective appendices.

2.0 OZONE METER FUNCTIONAL AND OPERATIONAL CHARACTERISTICS

2.1 Theory of Operation

The principle on which the chemiluminescent ozone meter operates is as follows: when ozone reacts with certain organic compounds, a minute amount of light is emitted. The amount of light is directly proportional to the ozone concentration, and the wavelength of the emitted light is a function of the organic compound or dye used in the formation of the chemiluminescent disc. Gases to be sampled are passed over a disc coated with the dye. The emitted light resulting from the reaction with ozone is detected by means of a sensitive photo-detector.

2.2 Functional Description

A functional diagram of the ozone meter is shown in Figure 1. The basic element of the system is the chemiluminescent disc and photo-detector assembly. The gases to be sampled are metered at a constant flow rate across the disc. The emitted light resulting from the reaction of ozone with the chemiluminescent material is monitored by the photomultiplier tube.

The system has essentially three modes of operation. During the MEASURE mode gases are pulled through the sample-gas inlet, and then passed over the disc. During the CALIBRATE mode the sample-gas inlet is closed and the calibrate line is opened by means of electrically actuated solenoid valves. Air which enters the calibrate line passes through a filter which removes contaminants and destroys any ozone present. A controlled amount of ozone is generated in the "clean air"

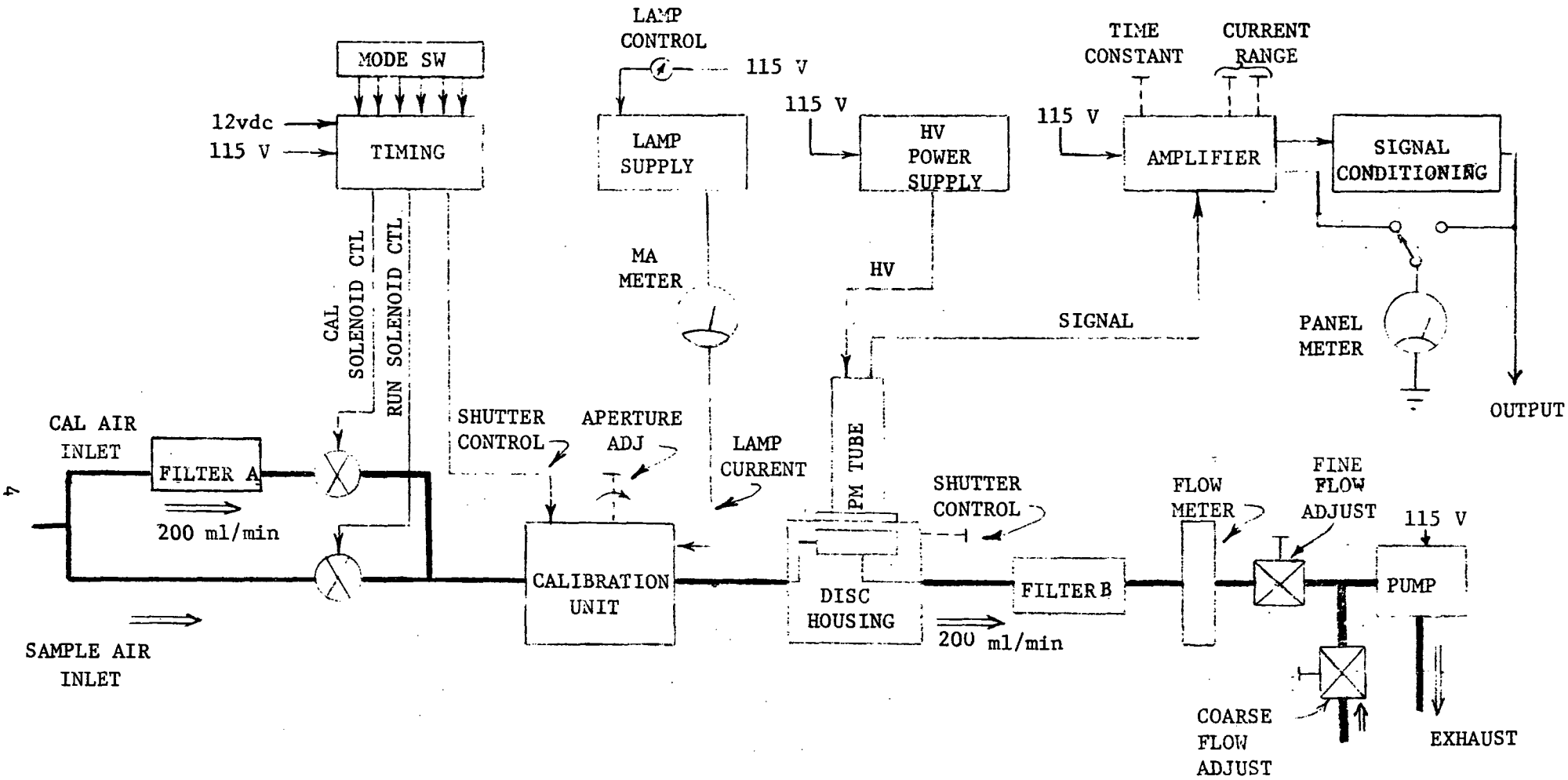

FIG. 1. OZONE METER FUNCTIONAL DIAGRAM

as it passes through the calibration unit by exposing the air stream to an ultra-violet light source. A calibrated aperture control facilitates varying the ozone concentration. A front panel control and meter provides for lamp current control and monitoring, respectively. During the PURGE mode, the unit operates as in the CALIBRATE mode, except the calibrate lamp shutter remains closed.

The gases are metered at a constant flow rate of 200 ml/min through the disk chamber by means of control valves, a flow meter and pump. The flow meter and vernier control valves are located on the front panel of the instrument. The timing and control unit provides the necessary switching voltages for actuating the various solenoids. Selection of operating modes is made by means of front-panel push-button switches.

The light emission from the disk is detected by means of a sensitive photomultiplier tube. The output of the PM tube is amplified and presented on a panel meter and at a recorder output connector. Five linear-decade current ranges are provided. Continuously variable controls are provided for span and zero adjustment. A time-constant control is incorporated in the amplifier which facilitates smoothing of the analog data. A manually operated shutter incorporated in the disk chamber allows for monitoring of the PM tube dark current. High voltage for the PM tube is provided by a well regulated, adjustable HV supply.

The output signal-to-dark current ratio for a given concentration of ozone is a direct function of the sensitivity of the disk and the quantum efficiency of the photomultipier tube in the spectral region

of the emitted light. Since the dark current and the quantum efficiency vary considerably from tube to tube one may expect a factor of 10 or more in this ratio. With tube selection this may be reduced to a 10-20% variation from unit to unit.

The system design includes two selectable sampling modes; SAMPLE-I is continuous sampling while SAMPLE-II inserts a PURGE mode for a 30 min period of time, every 12 hours. The sampling-mode consists of a 75 sec-measure, 75 sec-purge, 75 sec-calibrate, and 75 sec-purge cycle. In addition, push-button actuated modes are available for operating continuously in the RUN, CALIBRATE, or PURGE modes; these facilitate test and calibration procedures. An EXTERNAL mode is provided for remotely controlling the operational mode of the instrument.

The output signal from the amplifier is provided at an output connector and at the input to the signal conditioner. This latter unit accepts the sampled signal and essentially provides an output signal, e_o, which is

$$e_o = \frac{m-p}{c-p}$$

where m - is the measure signal value

c - is the calibrate signal value, and

p - is the purge signal value.

2.3 Physical Description

A front panel view of the ozone meter illustrating the type and location of all controls, meters, etc., is shown in Figure 2. The cover for the HV supply, which is normally in place, is shown removed for purposes of illustration.

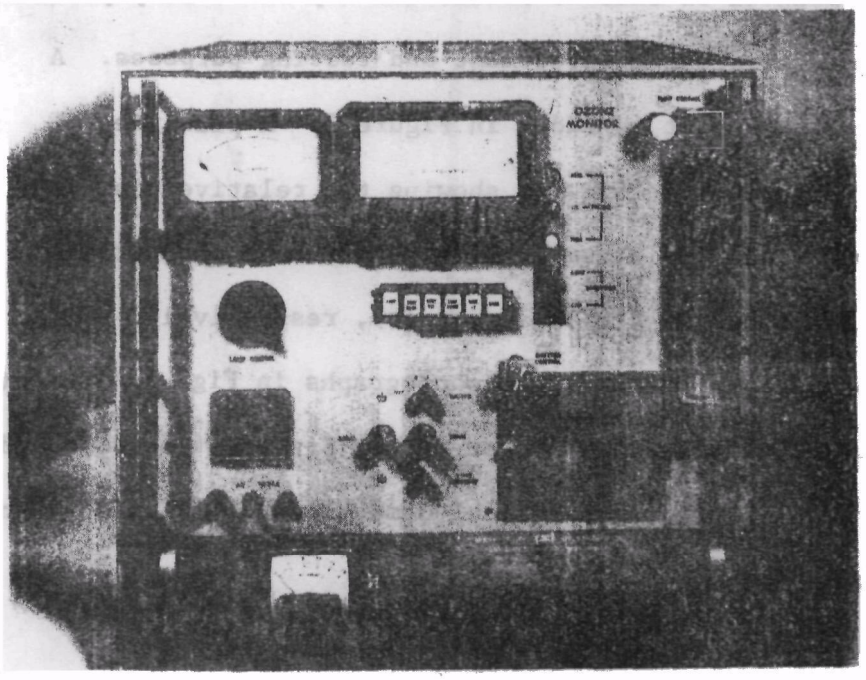

Figure 2. Front Panel View (with HV Power Supply Cover Removed)

There are two basic units, the main chassis and the HV power supply. The latter is located in the bottom of the cabinet. The main chassis is mounted on chassis slides and may be readily pulled out on the chassis slides for adjustment and testing purposes. A rear view of the instrument is shown in Figure 3. A plan view of the main chassis is given in Fig. 4, showing the relative positioning of the major components and assemblies. Top and rear photographs of the chassis are shown in Fig. 5(a) and (b), respectively. Side views of the chassis are shown in the photographs in Fig. 5(c) and (d).

Both the main chassis and HV power supply fit into the standard 19" width cabinet. The overall physical dimensions of the instrument are as follows:

Height - 47 cm,

Width - 50 cm,

Depth - 58.5 cm,

Weight - 68 kg.

The unit requires approximately 300 watts of power from a 115 V, 60 Hz single phase source. A block diagram illustrating the AC and DC power distribution is given in Figure 6.

2.4 Instrument Specifications

SYSTEM:

Dynamic Range - 0.001-2.0 ppm
Resolution - 1 ppb
Minimum Detectable Level - 1 ppb
Accuracy - $\pm$ 10% at time of calibration, with respect to values obtained by KI technique (See Section B-11)
Stability of calibration signal - approx. 1.5%/volt of line voltage
Calibration - nominal range 0.1-0.2 ppm
internally adjustable 0-0.1 ppm
Output - front panel meter 0-10 units
recorder output - 1 volt FS; max rated output - 5 mA

AMPLIFIER:

Output Meter - full scale value indicated by SENSITIVITY and FS OUTPUT control settings

Sensitivity - linear - 10^{-9} amps, FS
10^{-8} " "
10^{-7} " "
10^{-6} " "
10^{-5} " "

Stability - linear - 0.01% per°C; 1% per month (for 10^{-9} amp range)

2.5 Front Panel Controls and Indicators

MODE CONTROLS: (Lamps indicate mode of operation)

Ext. - external timing control
Cal. Cont. - continuous CALIBRATE
Meas. Cont. - continuous RUN
SAMP. I - five minute cycle: 75 sec measure, 75 sec purge, 75 sec calibrate, 75 sec purge
SAMP. II - same as Samp I, except a 30 min purge mode is inserted once every 12 hours

AMPLIFIER:

Span - modifies full scale sensitivity by factor indicated
Time Constant - normal, 1 sec, 2 sec, 4 sec
Zero - provides dark current offset control from 0 - 10^{-8} amps

LAMP CURRENT - controls calibration lamp current

ELAPSED TIME METER - hours and 1/10 hours, actuated during power ON condition

FLOW CONTROL - valve and flowmeter for flow control and monitoring

SHUTTER - (Lamps indicate shutter position) open for operation; close for dark current check and disk removal/replacement

DISK ACCESS DOOR - allows removal/replacement of disk

INTERLOCK SYSTEM - indicates shutter control status; warning buzzer when disk access door opened without fully closing shutter

HV POWER SUPPLY:

Power Switch - ON position
HV Controls - normally set for value which yield PM tube gain = 200 A/L
Cover - normally left in place

AC POWER - single switch turns entire unit on

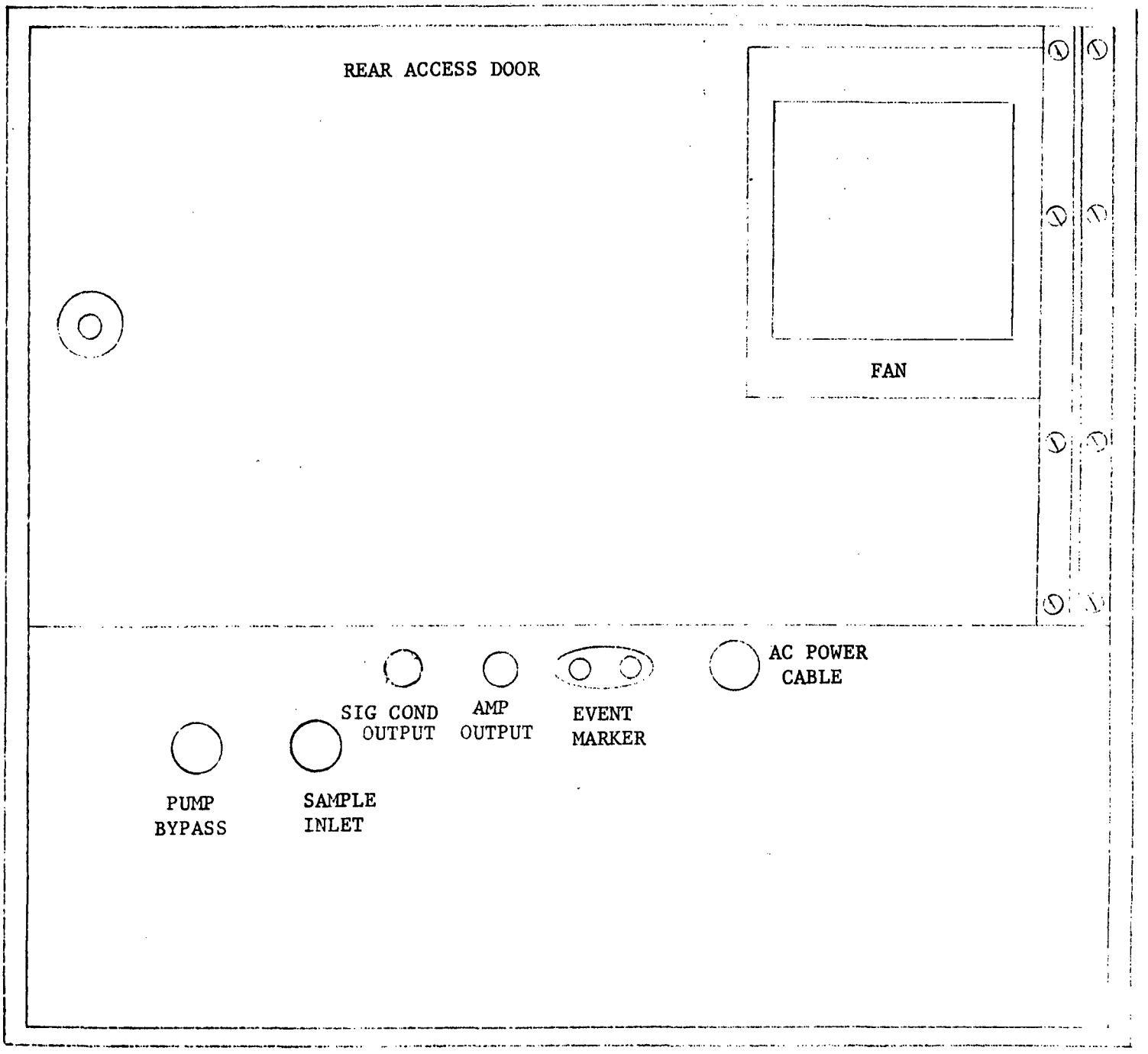

FIGURE 3. REAR PANEL VIEW OF OZONE METER

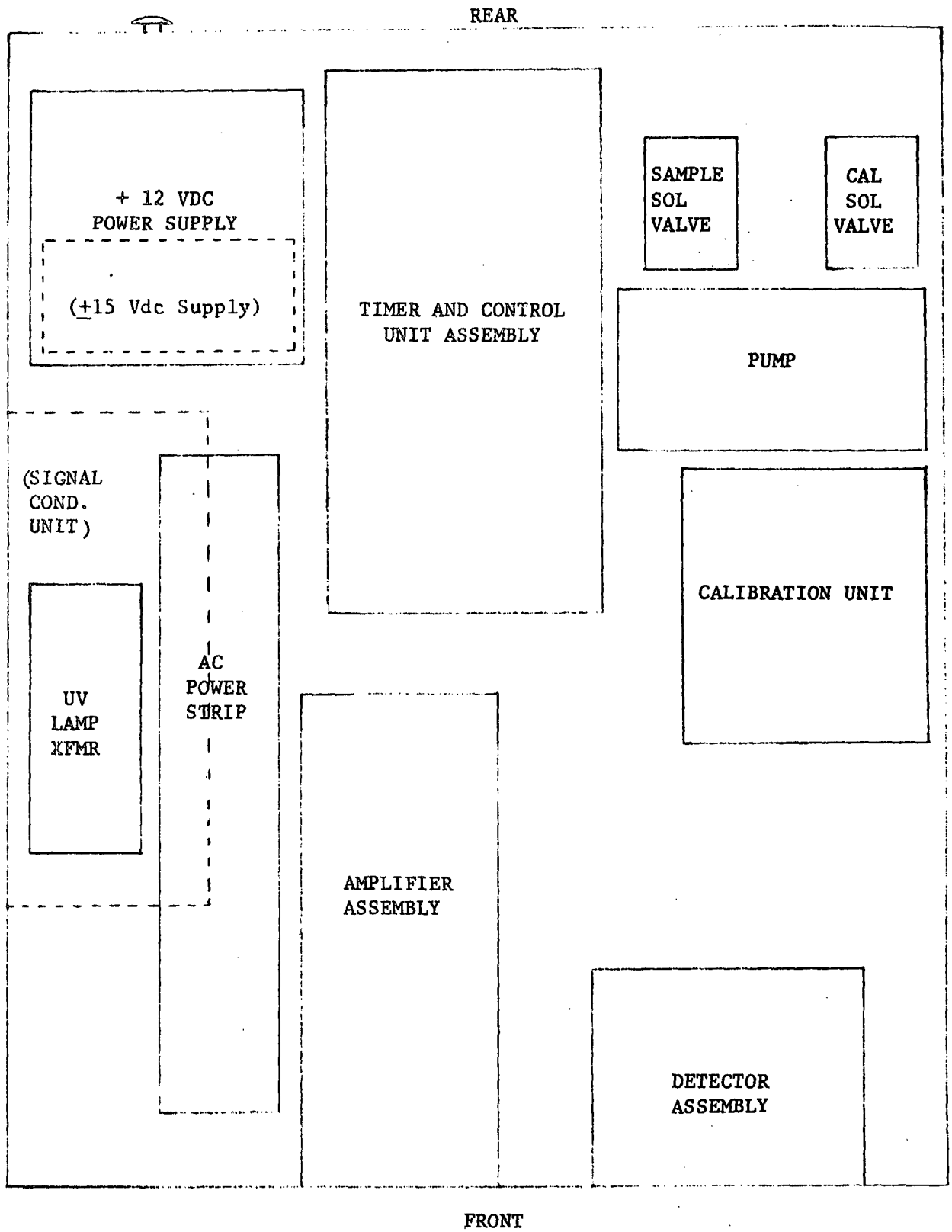

( ) indicates unit in dotted lines which are on a 2nd level

FIGURE 4. MAIN CHASSIS LAYOUT

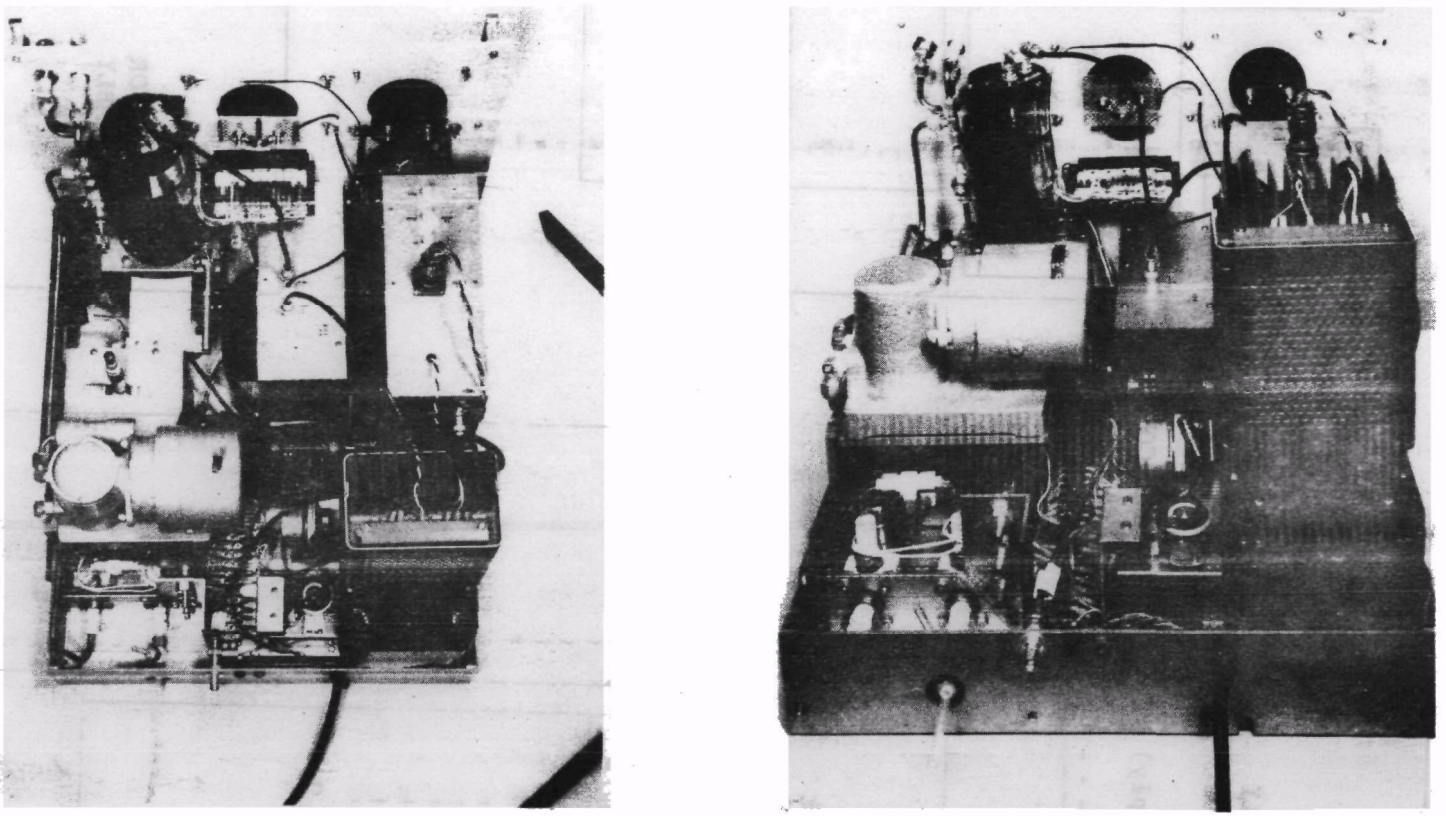

(a) (b)

Figure 5. Top and Rear View of Chassis

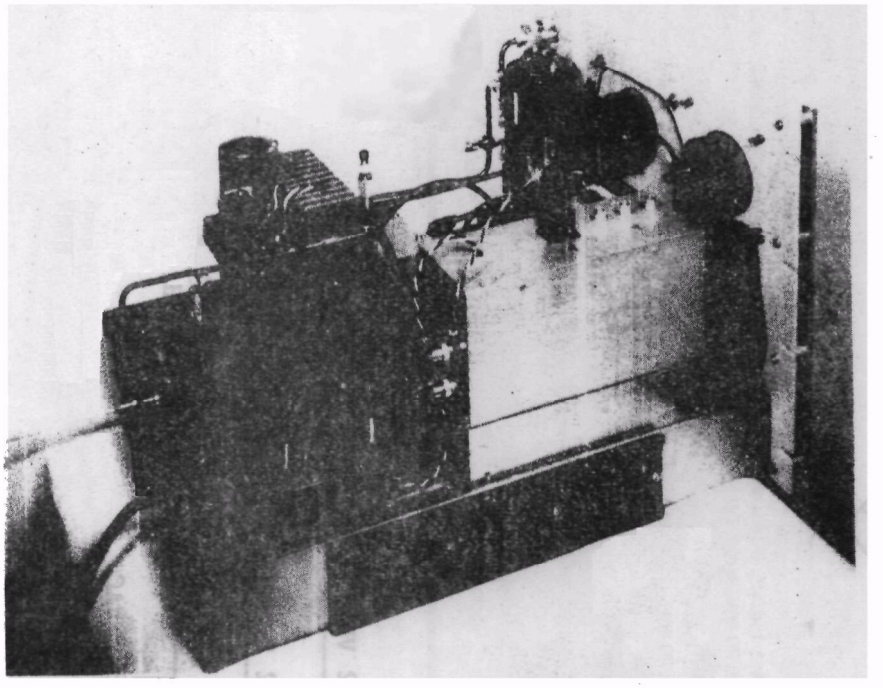

(c)

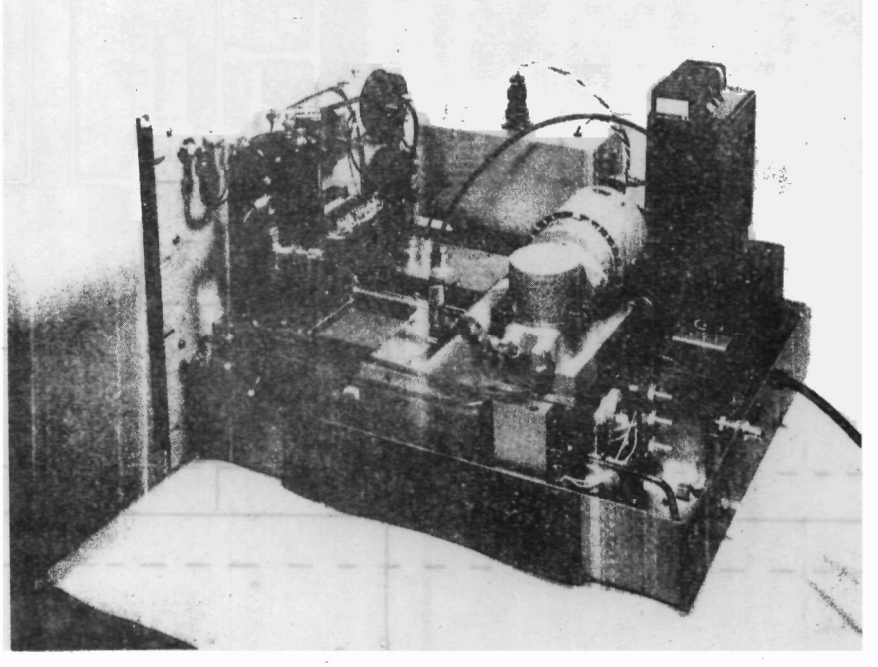

(d)

Figure 5. Left & Right Size Views of Chassis

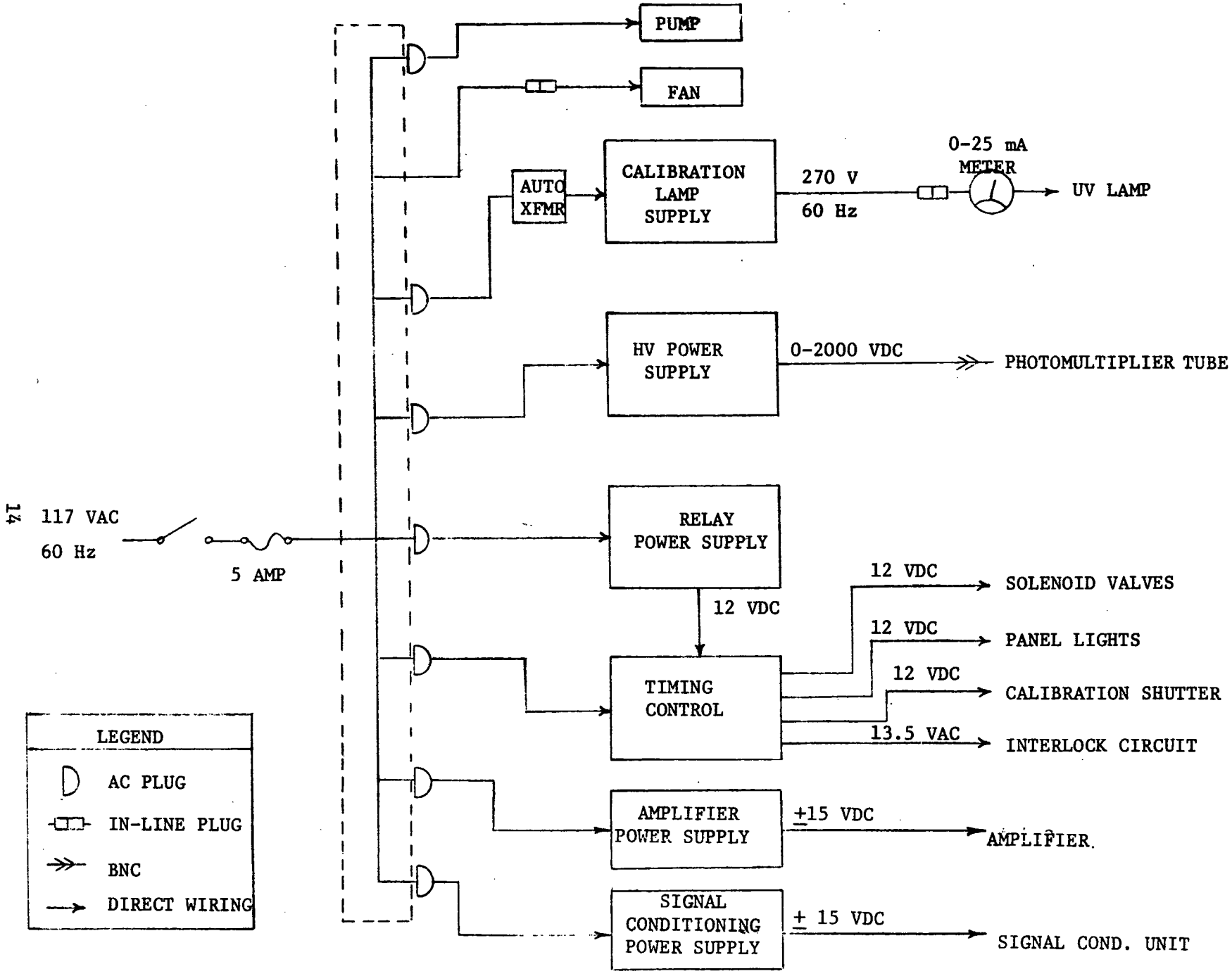

FIGURE 6. AC AND DC POWER DISTRIBUTION

3.0 DETAILED SYSTEM DESCRIPTION

3.1 General

A functional description of the overall system was given in Section 2.0, reference should be made to this section for clarification of the individual subsystem functional requirements. Throughout the system, commercially available parts are used where practical. In some cases it was necessary to modify slightly some of the components. All call-out parts may be identified by manufacturer and type by referring to the respective section in the parts list (see appendix).

3.2 Plumbing Subsystem

A detailed diagram of the plumbing subsystem is shown in Figure 7. In this diagram the functional location of all significant components are shown, along with the type of tubing, fitting, etc. A parts layout for the plumbing subsystem is shown in Fig. 8 in which the relative location of all the components are shown.

In the MEAS mode, gases are pulled through the sample air inlet line; during the CALIBRATE mode, gases are pulled through the calibrate air inlet line and through the filter. This latter operation removes contaminants from the intake air and destroys all of the ozone. Both the sample and calibrate gases follow common paths after passing point (7A). Only one of the two ports is open at any given time. After passing point (8) the incoming gas (200 ml/min) is passed through the light rejection coil into the detector unit. The light rejection coil is a single turn of teflon tubing--covered with black-shrinkable

A

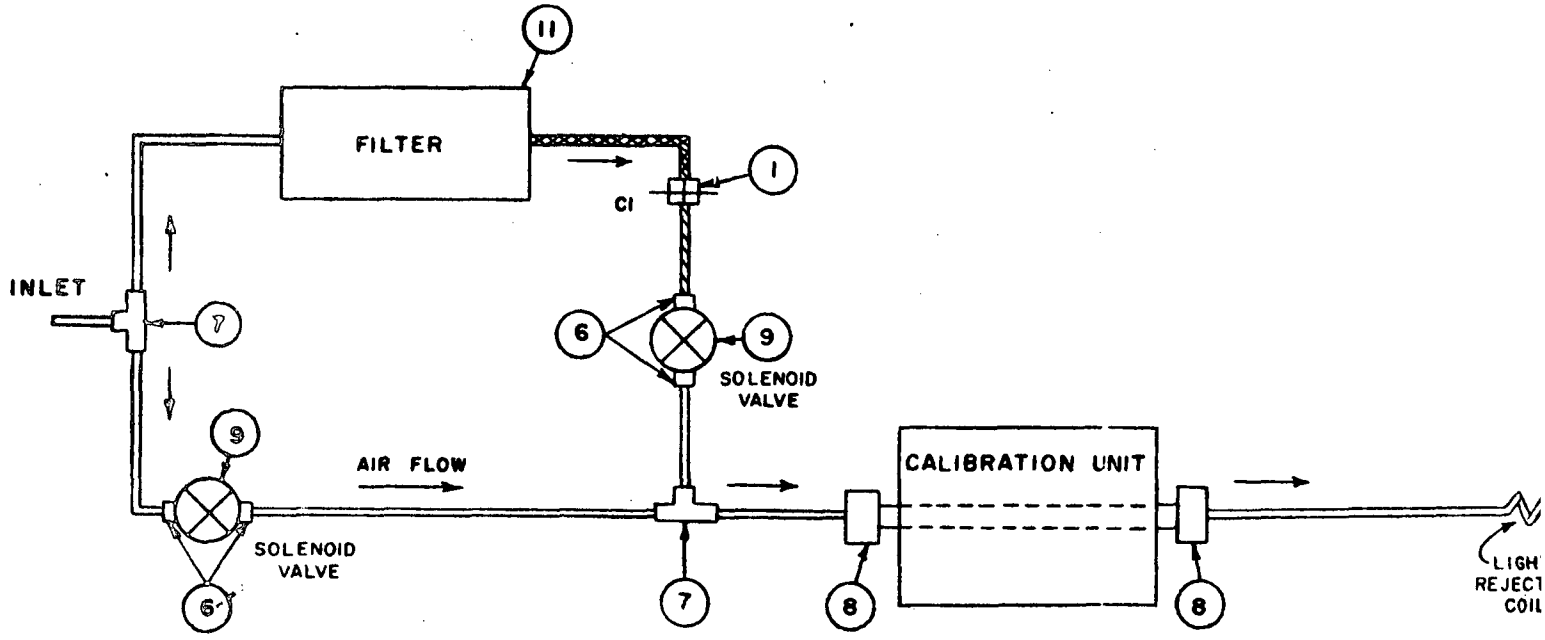

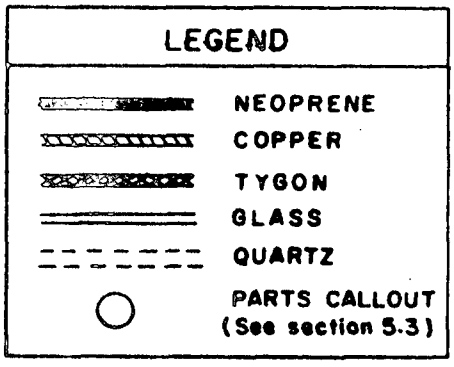

FIG. 7 PLUMBING SU

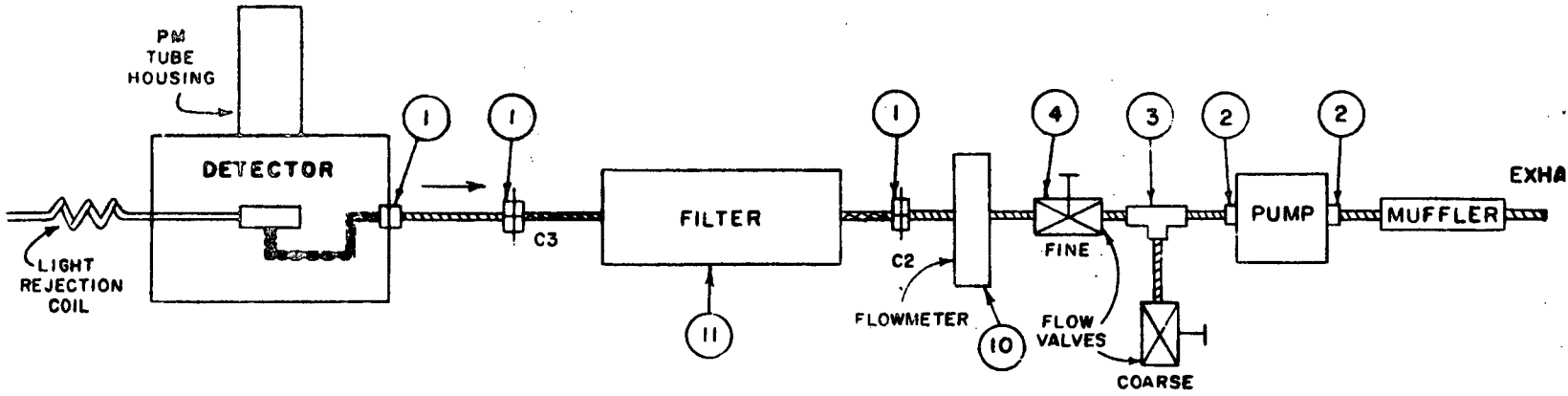
PM
TUBE
HOUSING
DETECTOR
LIGHT
REJECTION
COIL
1
1
C3
FILTER
11
1
C2
FLOWMETER
10
4
FINE
3
2
2
PUMP
MUFFLER
EXHA
FLOW
VALVES
COARSE

G SUBSYSTEM

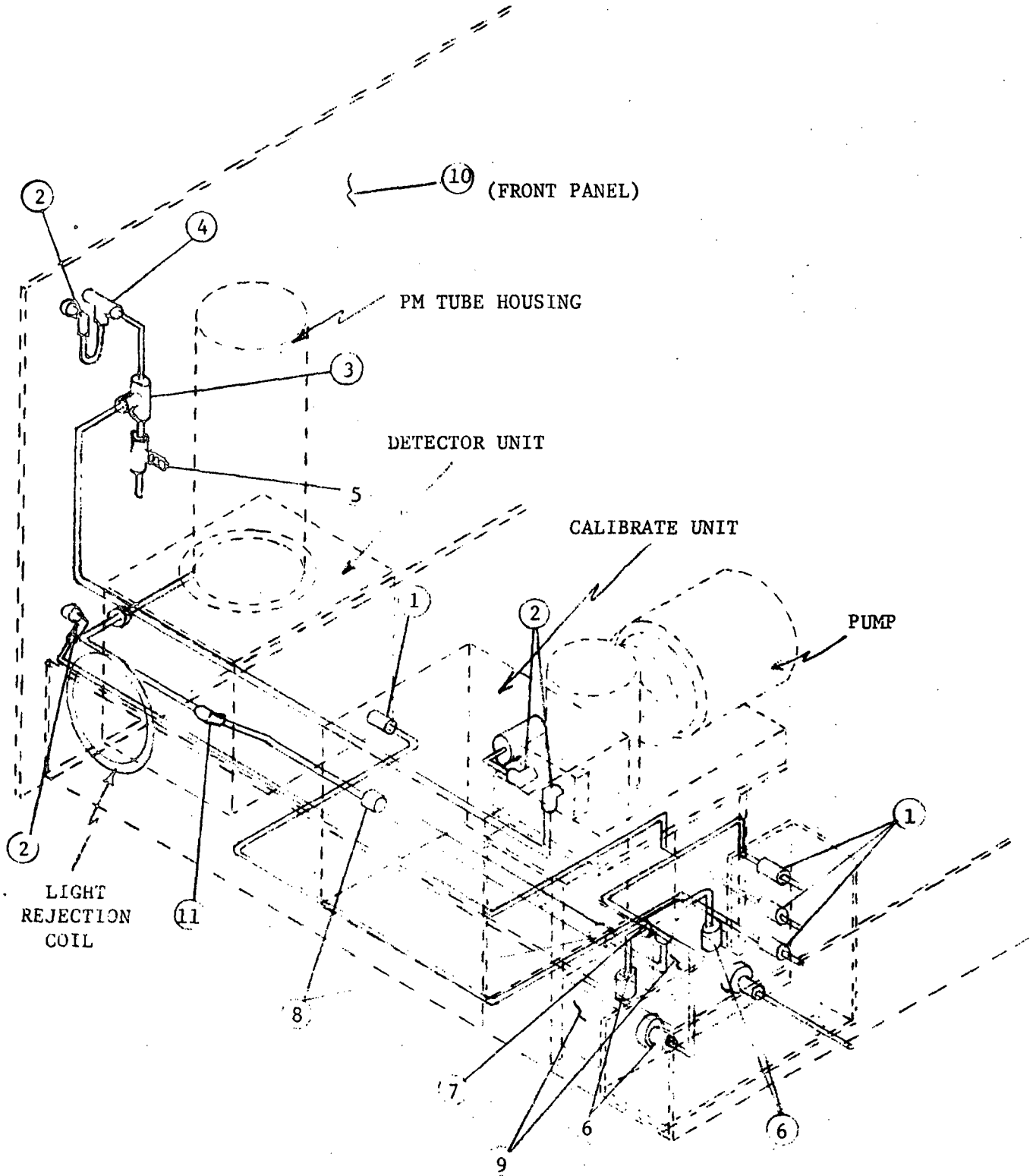

FIGURE 8. PLUMBING SUBSYSTEM PARTS LAYOUT

vinyl tubing. This device reduces to an acceptable level the amount of external light entering through the entrance port. The gas passes over the chemiluminescent disk, through another filter, flowmeter, valves and pump. A bleed valve (coarse control) is provided to prevent the pump from being overloaded.

A flowmeter is used for adjustment and monitoring; the meter has a standard accuracy of $\pm$ 10% of maximum scale from 100% to 10% of scale reading. The calibration curve is shown in Appendix B; see this section also for instructions for proper set-up procedure. Two precision vernier control valves are used for this purpose. The fine flow control valve is located on the front panel of the instrument.

All parts of the system between the sample inlet port and the detector are constructed of either glass or teflon in order to prevent the destruction of ozone. Soft copper and tygon tubing, brass tubing fittings and brass valves are used where contamination is not a problem.

Two filters are used in the chemiluminescent ozone meter; these are shown functionally in Figure 7. Filter A is a disposable millipore aerosol filter which has been modified and includes filter paper, glass wool, activated charcoal, and manganese dioxide. Its function is to destroy and prevent ozone contained in the ambient air stream from entering the ozone generator. This is required to insure a constant part per million calibration ozone output from the generator. Filter B (Figure 7) is a disposable millipore aerosol filter filled with glass wool. Its only function is to prevent particulate matter

from entering the rotameter and needle valve. A cutaway drawing of Filter A and instructions for care and maintenance of both filters are given in Appendix B.

3.3 Detector

A cross sectional view of the detector assembly showing the principal components is shown in Figure 9. The location of the detector unit in the system is shown functionally in Fig. 1, and the associated plumbing is shown in Figure 8. The principal components of the detector are the photomultiplier tube (PM) and HV supply, disk chamber and associated plumbing. The chamber is designed so that the inlet air enters the chamber tangentially to the disk and follows a spiral-like flow over the disk, passing through the exhaust port which is located in the center of the disk chamber. A pictoral representation of this is given in Figure 10. The top of the chamber consists of a quartz window sealed to the chamber, thus providing an air-tight chamber.

Light entering the chamber by the inlet port is reduced to an acceptable value by means of a loop in the inlet glass tubing. The loop is encased in black vinyl heat-shrinkable tubing. Black rubber tubing satisfies the requirements for the exit port.

The cutaway view of the PM tube and housing in Fig. 9 shows the placement of the special grounding braid located between the tube near the cathode end and the MU-metal shield. The latter shields against stray electric and magnetic fields. The braid reduces noise due to static charge buildup on the tube. This is an addition to the

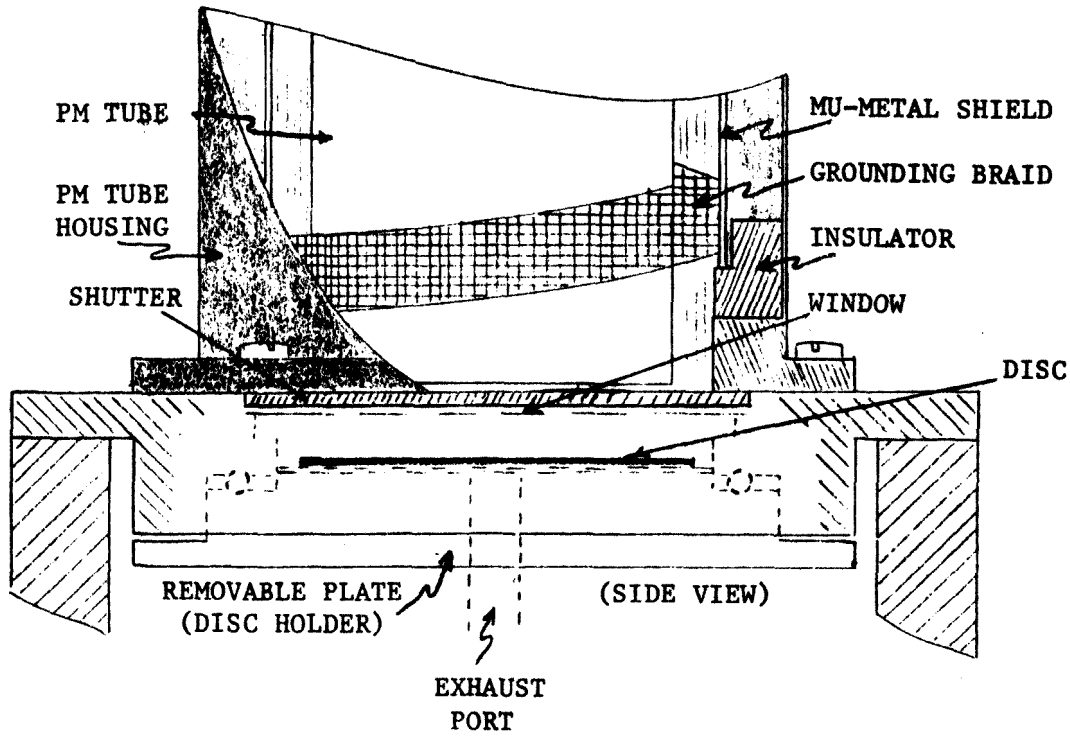

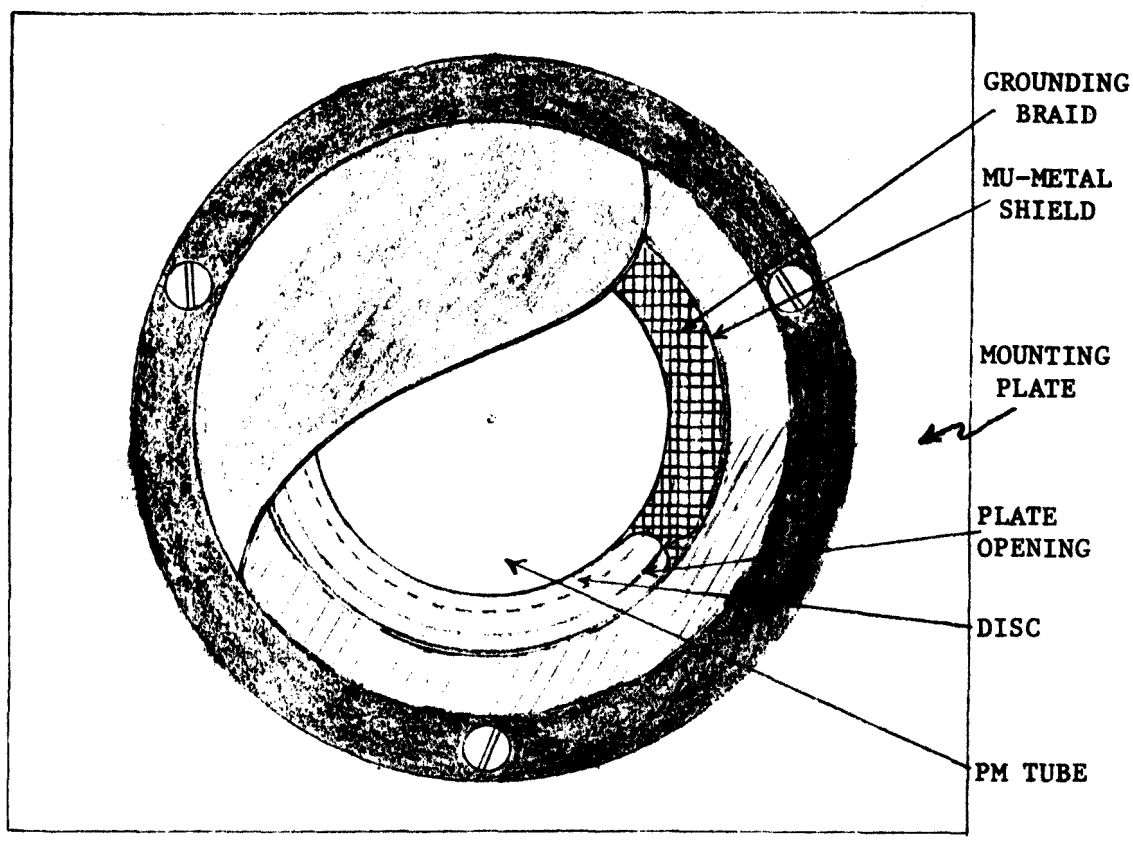

(TOP VIEW)

FIGURE 9. DETECTOR ASSEMBLY

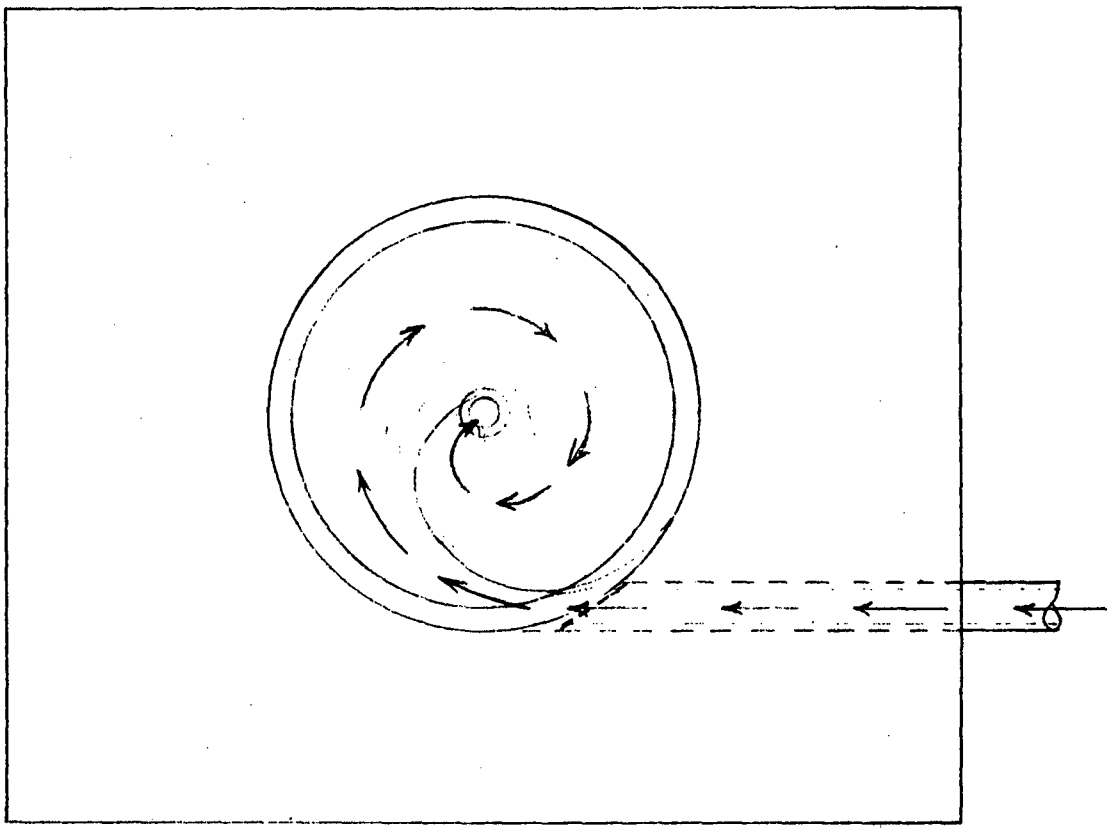

FIGURE 10. AIR FLOW PATTERN IN DISC CHAMBER

standard PM tube housing. The separation distance between the PM tube cathode and the chemiluminescent disk is approximately 1/2 inch. See Appendix B.10 for details on tube handling.

The cathode of the PM tube is positioned approximately flush with the face of the PM tube housing bolt flange. A circuit diagram of the PM tube base wiring is shown in Figure 11. The tube is an EMI Type 9558C selected for dark current $<10^{-9}$ amps. The high voltage (HV) for the PM tube is generally set for the value which yields a gain = 200 A/L.

A complilation of the PM tube characteristics for several 9558C type PM tubes is given in Table 1. This includes the factory specifications and the measured values for dark current. The ratio of measured to rated dark current was approximately 3/1 which was in line with the expected increase in PM tube dark current due to increased temperature. The factory rated value is run at 20°C while the units in the laboratory were operated somewhat above this level.

The signal-to-dark current ratio, which was used as a measure of comparative sensitivity for the PM tubes, was measured on the same unit, same disk, etc., with no changes in conditions within practical limits.

The high voltage supply is a Power Designs Model 2K-10 with front panel controls which allow for precise selection of the high voltage value. A cover is provided for this unit so that the voltage controls will not inadvertently be changed. The unit is so designed so that both the high voltage and primary power ON switches are left in the ON positions and the power for the entire instrument controlled

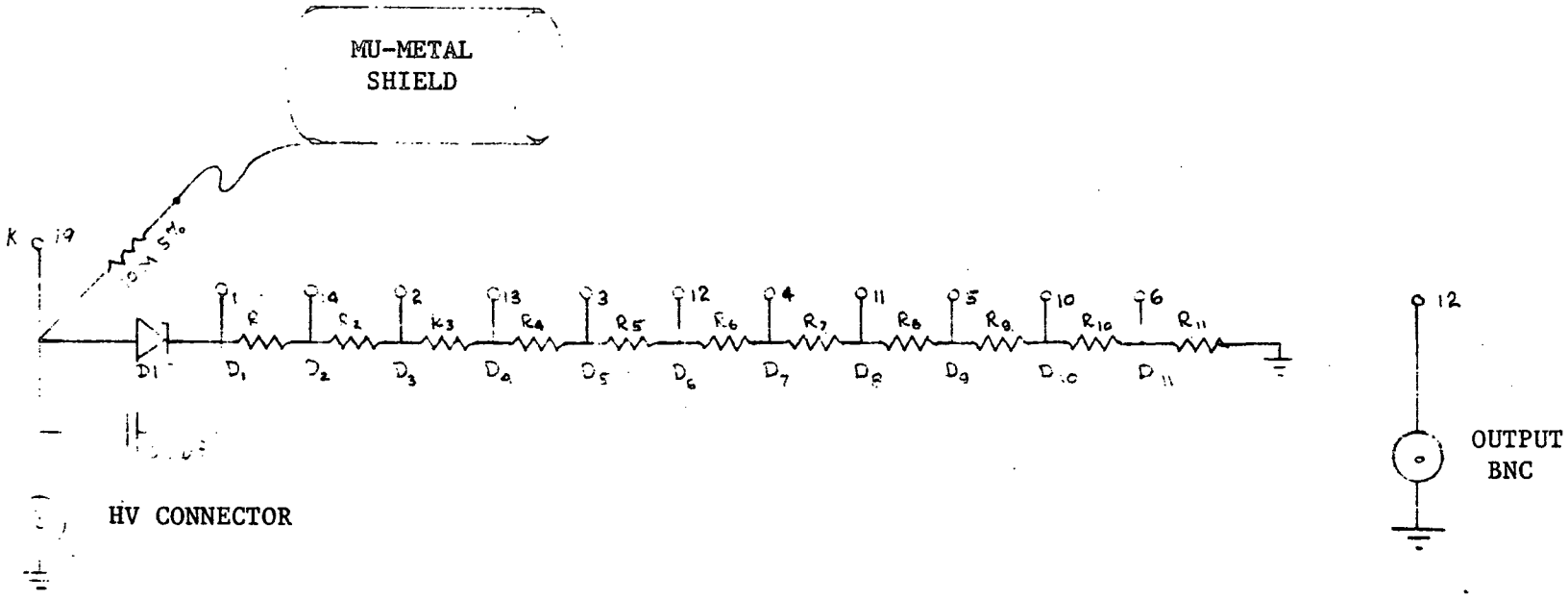

R_1 - R_{11} - 200K, 1% METAL FILM

D1 - ZENER DIODE 1N5276B

V_Z = 150 V

V_{ZT} = 0.85 mA

FIGURE 11. PM TUBE HOUSING WIRING DIAGRAM

TUBE 9558C SERIAL #	DARK CURRENT (RATED)	DARK CURRENT (MEASURED)	RATIO OF QUOTED TO MEASURED	HIGH VOLTAGE (FOR GAIN OF 200)	CATHODE SENS. μA/L	SIGNAL TO DARK CURRENT RATIO	COLOR SENSITIVITY B	R	IR
11781	2.6	6.8	2.62	1930	180	54.0	10.3	52	4.2
11959	0.8	2.4	3.00	990	94	100.0		26	0.4
11987	1.7	4.7	2.76	1130	118	16.0	8.2	41	1.6
11814	3.0	10.0	3.33	1970	170	23.0	9.0	55	5.8
11994	0.5			1030	110	180-200	7.4	36	1.2
11312	2.2	6.2	3.55	1340	96	16.7	7.0	34	2.6
20002	2.8	0.5	0.178	1110	98	128.0	7.1	30	0.6
*20175	0.8	1.5	1.88	1090	111	---	8.6	30	0.7

*Unit used in Model EU-525-08

TABLE 1. PHOTOMULTIPLIER TUBE CHARACTERISTICS

by the one power switch. A test was made on 5 HV supplies to determine the accuracy of the voltage setting controls. This was done by setting the controls for the 500, 750 and 1000 volt levels in turn and measuring the true output with a Fluke Model 895A DC null voltmeter. The results are shown in Table 2.

Table 2

HV POWER SUPPLY SETABILITY TEST

Unit Number	Voltage Setting 500	750	1000
902151	501.4	751.5	1001.8
902166	501.6	751.9	1002.2
902185	501.94	752.5	1002.985
902193	501.65	751.94	1002.28
902163	501.43	751.71	1001.96

A shutter is incorporated in the disk housing between the quartz window and the cathode of the PM tube. The primary purpose of the shutter is to facilitate the measurement of the PM tube dark current. In addition it is used to protect the tube from external light when the disk is replaced. Access to the disk is through the door on the front panel. A miniature lab jack is used to raise and lower the disk holder. An interlock circuit, designed to prevent inadvertent exposure of the PM tube to excess light, gives visual indication for the fully open and fully closed conditions for the shutter. When the shutter is in the fully opened position, a mechanical stop prevents opening of the disk access door. A buzzer sounds

if the disk access door is opened when the shutter is in any but the fully closed condition. Details on this circuit are given in Figure 12.

3.4 Calibration Unit

In the calibration unit clean air is exposed to a constant amount of ultraviolet radiation from a low-pressure mercury arc lamp. The particular spectral region of interest is around 1850 Å. The resonance line of mercury is 2537 Å; however, enough energy is radiated in the shorter wavelength region to produce the desired ozone level. The calibration unit consists of a low pressure mercury arc lamp, a quartz tube through which the clean air flows, and an adjustable aperature and solenoid controlled shutter. A cutaway drawing of the calibration unit listing the major components, is shown in Figure 13. Details on lamp replacement and aperture range adjustments are given in Appendix B.5 and B.9, respectively. The level of radiance is controlled and monitored by means of a variac and lamp current meter. Various, but repeatable, levels of O_3 concentration are obtainable with the adjustable aperture. The specific calibration curve for the instrument is shown in Figure 14.

The housing is essentially a sealed unit to preclude the escape of ozone or UV radiation. Because of the thick wall construction, the unit is reasonably stable, thermally. The lamp is left on at all times and the unit is effectively turned on and off by activation of the electrically operated shutter. The particular UV lamp used is rated at 17 mA. The lamps are pre-aged for 400-500 hours and then selected for optimum characteristics.

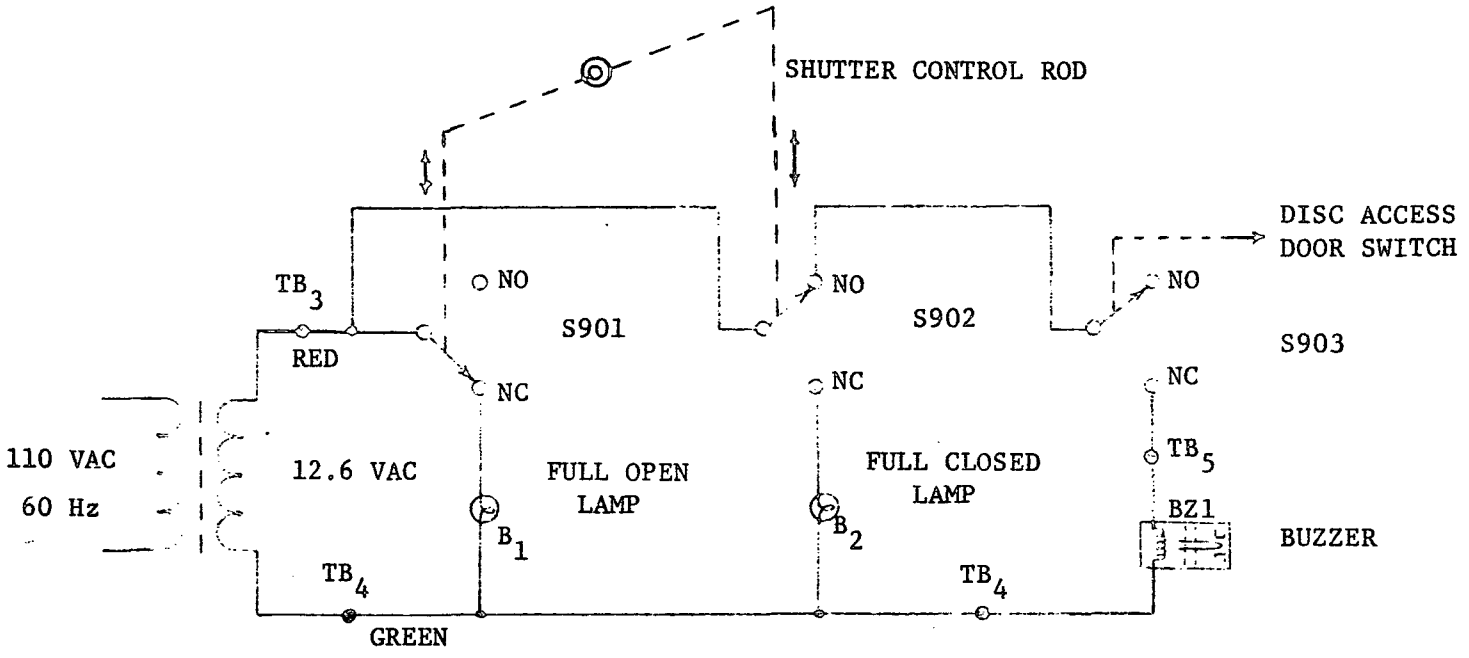

NOTE: SWITCHES SHOWN WITH SHUTTER OPEN AND DOOR CLOSED

FIGURE 12. INTERLOCK CIRCUIT

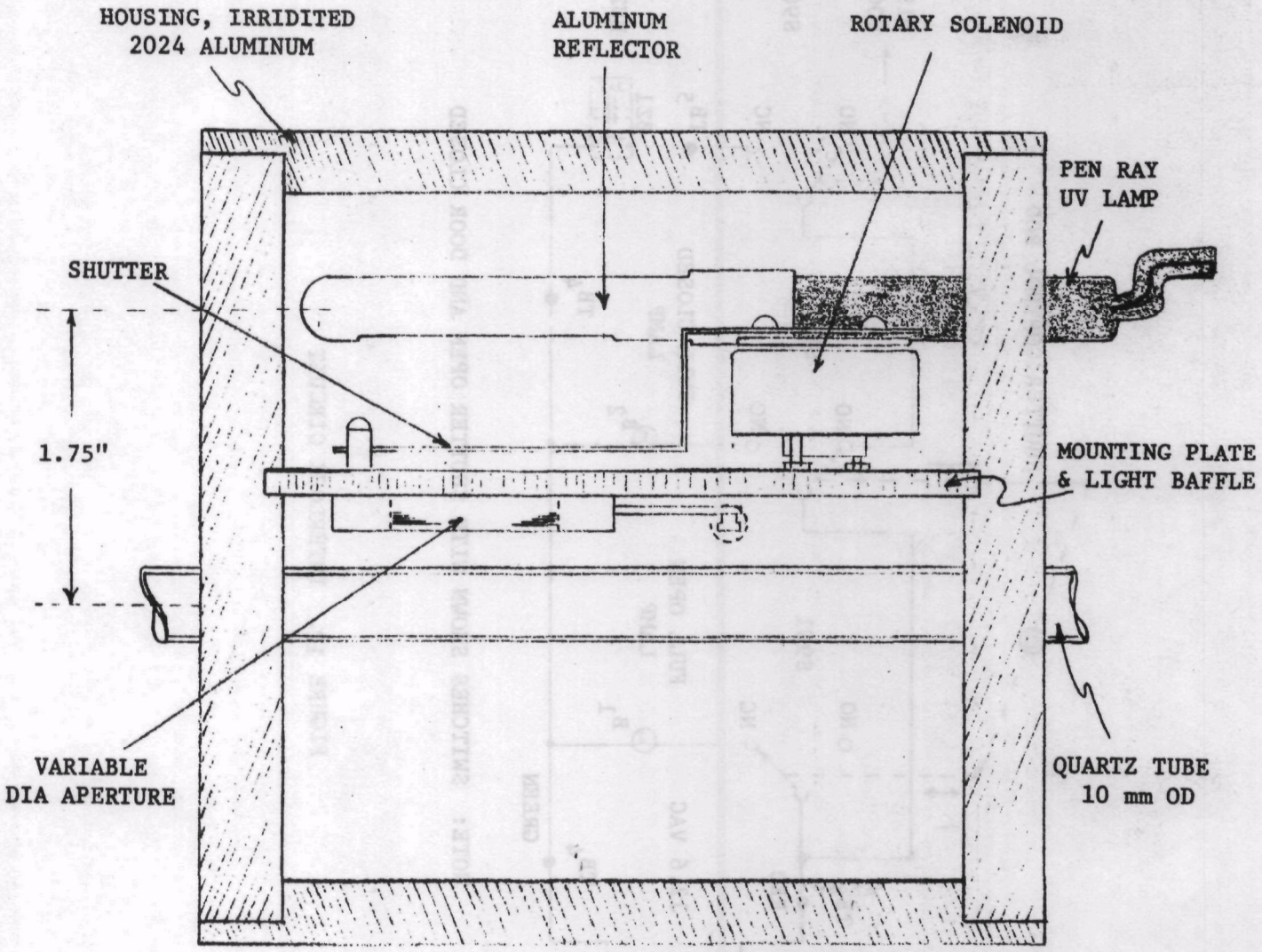

FIGURE 13, CALIBRATION UNIT (top view)

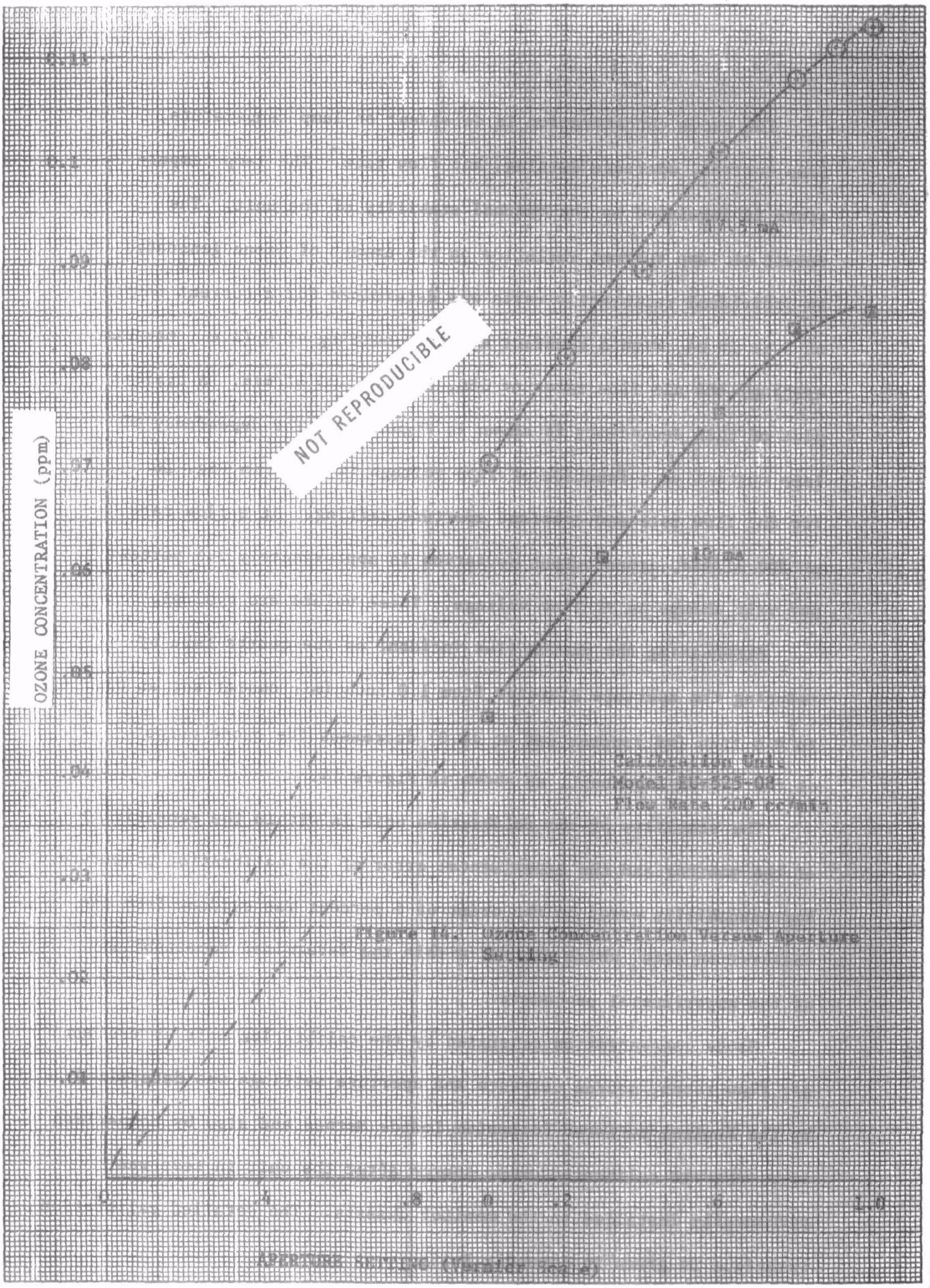

Figure 11. Ozone Concentration Versus Aperture Setting

The ozone concentration is dependent on lamp temperature, lamp current, aperture setting, and flow rate. The lamp temperature is regulated by the thermal stability of the unit. The result of lamp current variation on the amount of ozone generated in individual calibration units was determined for a current range of 5 to 18 mA, with a constant aperture setting of 0 (i.e., maximum opening) and air flow rates of 150, 200 and 300 ml/min. A typical plot of this dependency is shown in Figure 15. The dependency of lamp current as a function of line voltage is shown in Fig. 16 for one flow rate and constant aperture setting. At a flow rate of 100 ml/min, ozone output deviation is approximately 1.5 percent per volt change in AC line voltage. These values are typical.

Attenuating the photon flux incident on the quartz tube by reducing the aperture diameter from 1.0 inch (micrometer set at 0), to 0.5 inch (micrometer set at 10.0) decreases the ozone output of the calibration unit, as shown in Figure 14.

The stability of the calibration unit is within the sensitivity of the monitor and the experimental error of the calibration procedure. Reproducibility error on the order of 6 percent was evident from the calibration data, which also is within the determined repeatability of the experimental procedure.

Ozone concentration generated by the calibration unit at various air flow rates, source currents and aperture settings was determined by the Neutral Buffered-Potassium Iodide Method and also by comparison to a separate calibrated ozone source after the unit in test was permanently installed in the monitor chassis. The detailed calibration technique is given in Appendix B.12.

K&E 10 X 10 TO THE CENTIMETER 46 1513
18 X 25 CM. MADE IN U.S.A.
KEUFFEL & ESSER CO.

NOT REPRODUCIBLE

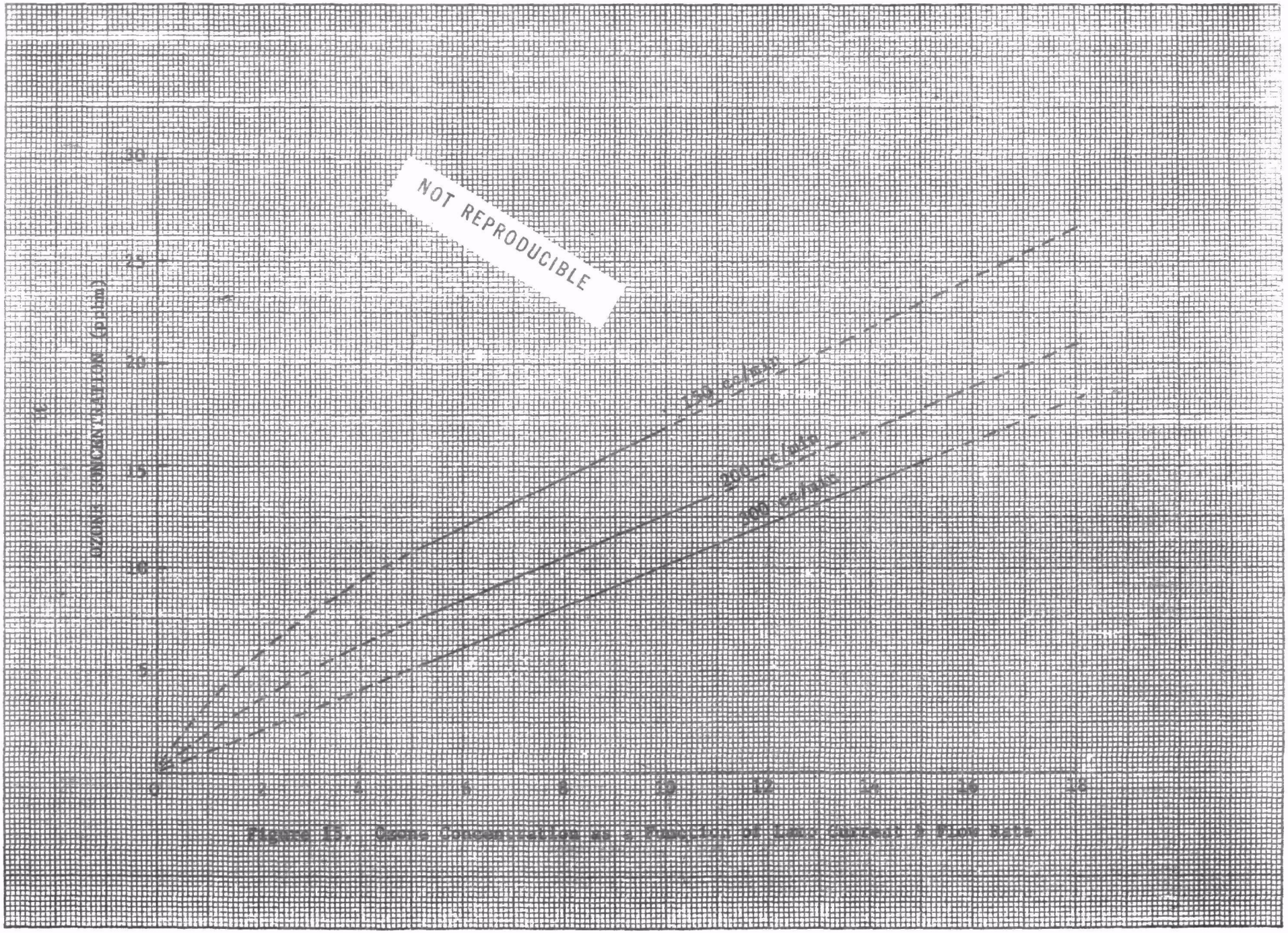

Figure 23. Ozone Concentration as a Function of Ozone Current & Flow Rate

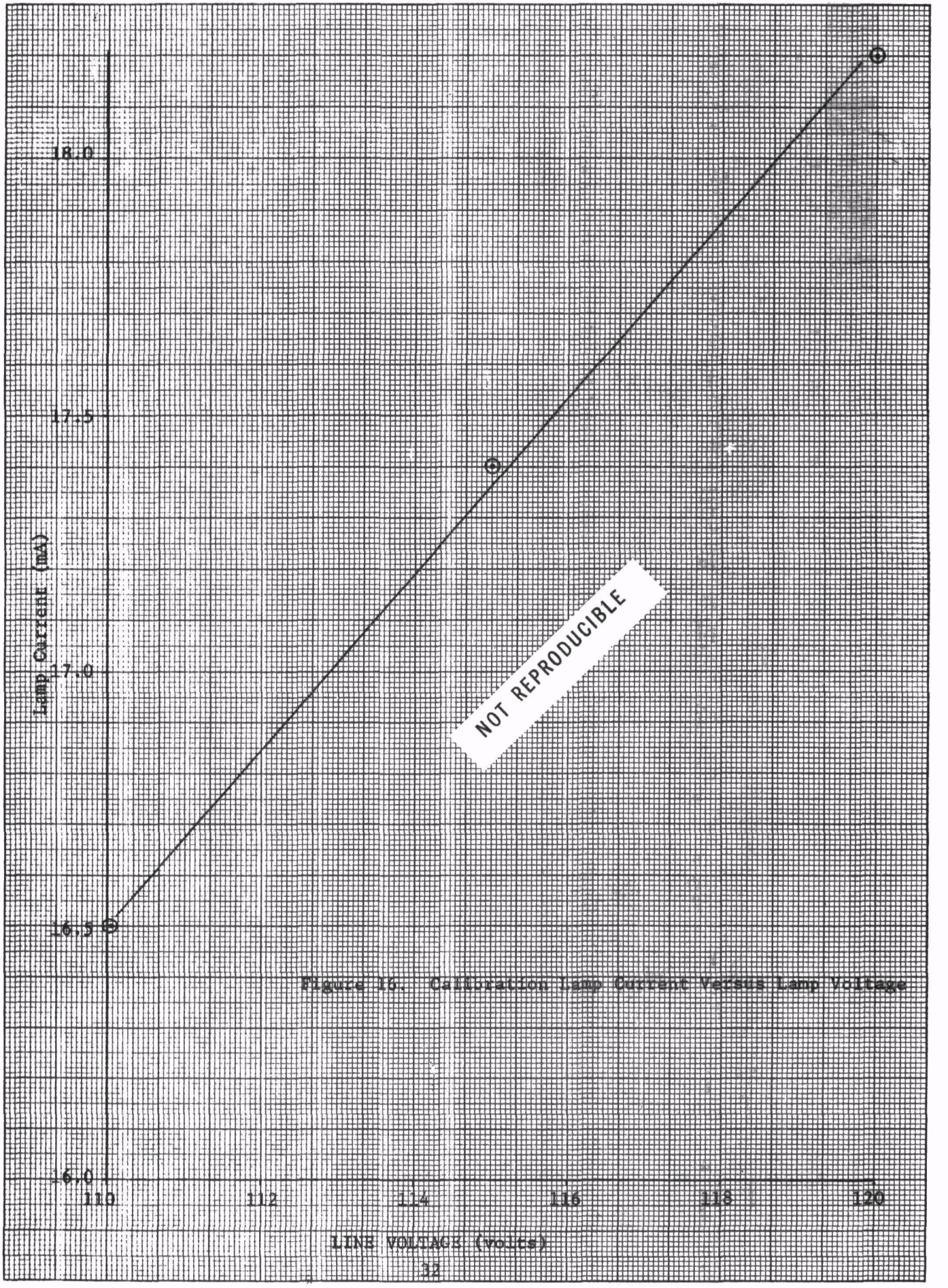

Figure 16. Calibration Lamp Current Versus Lamp Voltage

A calibrated ozone generator identical to the installed unit, preceded by an ozone-moisture trap and a mass flow meter, was attached to the sampling port of the ozone monitor being tested (see Fig. 17). Operating the monitor in the sample mode provided comparison data, which was indicative of the final calibration for the installed unit at various aperture settings. The stability and reproducibility of the individual unit was also observed.

3.5 Timing and Control Unit

The timing and control unit provides selectable timing cycles for the sample air and calibrate solenoids and the calibrate lamp shutter. A circuit diagram for the timing and control unit is shown in Figure 18. There are two automatic modes and three manual modes of operation which are push button selectable from the front panel of the instrument. The manual modes are as follows:

CONT MEAS - continuous operation in the measure mode; i.e., the sample air solenoid open and the calibration lamp shutter closed.

CONT CAL - continuous operation in the calibrate mode; i.e., the calibrate air solenoid open and the calibrate lamp shutter open.

CONT PURGE - continuous operation with the calibrate solenoid open, but with the calibrate shutter closed.

EXT - remote switch for external control of mode.

The two automatic modes of operation are essentially as follows:

SAMP I - 5 min cycle consisting of 75 sec measure, 75 sec purge, 75 sec calibrate, and 75 sec purge.

SAMP II - operation in the SAMP I mode continuously except for the 30 min PURGE mode every 12 hours.

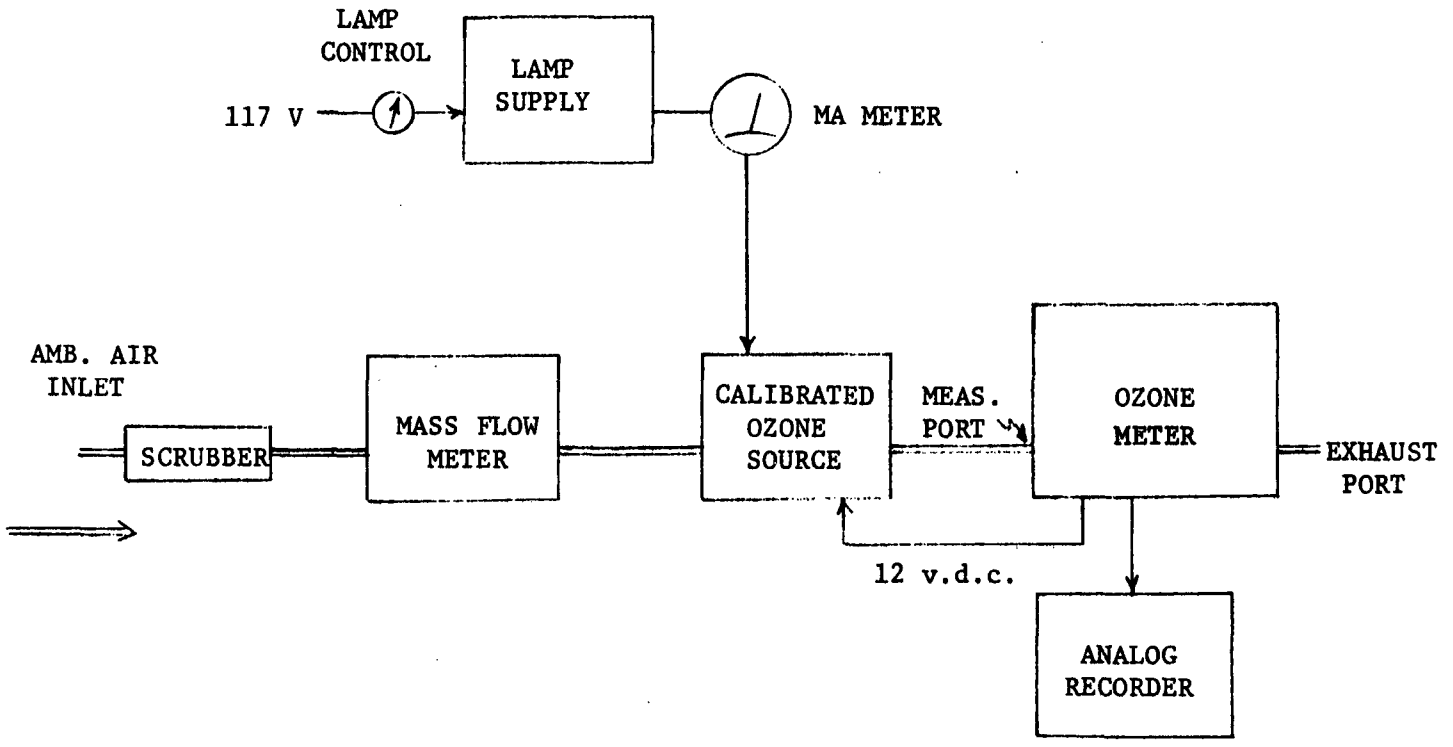

FIGURE 17. CALIBRATION UNIT, IN SITU CALIBRATION

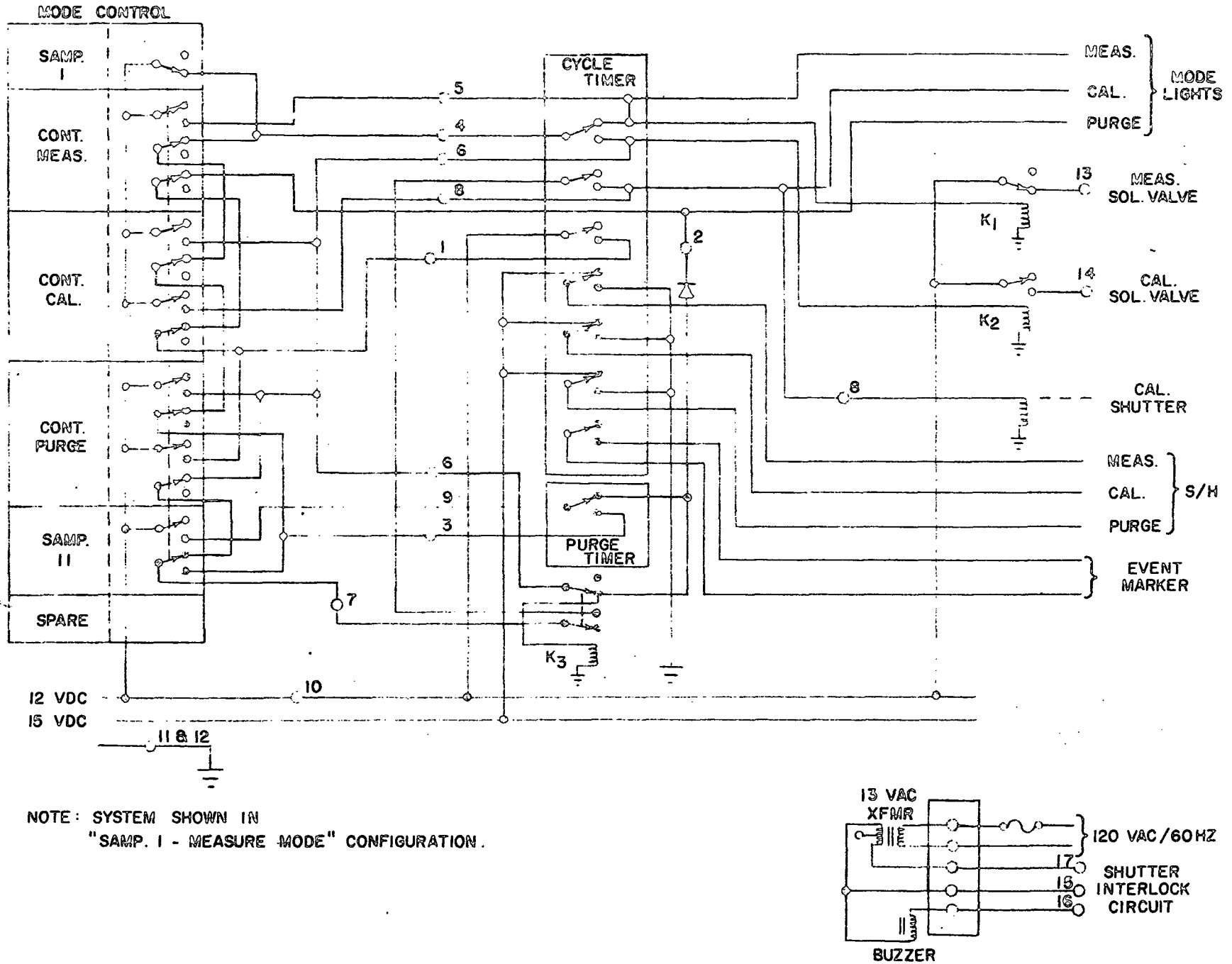

NOTE: SYSTEM SHOWN IN "SAMP. I - MEASURE MODE" CONFIGURATION.

FIGURE 18 TIMING CONTROL CIRCUIT

The indicated mode times for the automatic modes are those initially set into each unit; these are adjustable and may be set for longer or shorter periods of time. The timer adjustment procedure is given in Appendix B.6.

A 12 VDC power supply, located on the main chassis supplies the voltages for the solenoids, calibrate lamp shutter relays and indicator lamps.

Event marker connections on the rear panel are connected to relay contacts which are closed coincident with the actuation of the calibrate air solenoid and the sample periods for the measure, calibrate and purge S/H circuits.

The AC voltage supply and buzzer for the PM tube shutter interlock circuit are located on the timer chassis. Details of the interlock circuit are given in Section 3.3.

3.6 Linear Amplifier

3.6.1 Description -- The amplifier performs the function of raising the photomultiplier tube anode current from the lowest expected values, on the order of 10^{-9} amps, to the desired 0-1 volt output. A circuit diagram of the amplifier subsystem is given in Figure 19. The amplifier is basically a calibrated current meter incorporating a test position and five linear ranges. In addition, certain other desirable functions are provided such as an zero offset, span and time constant control. A summary of the amplifier characteristics is given below:

Sensitivity: Linear - 10^{-9} amps, FS
10^{-8} amps, FS
10^{-7} amps, FS
10^{-6} amps, FS
10^{-5} amps, FS

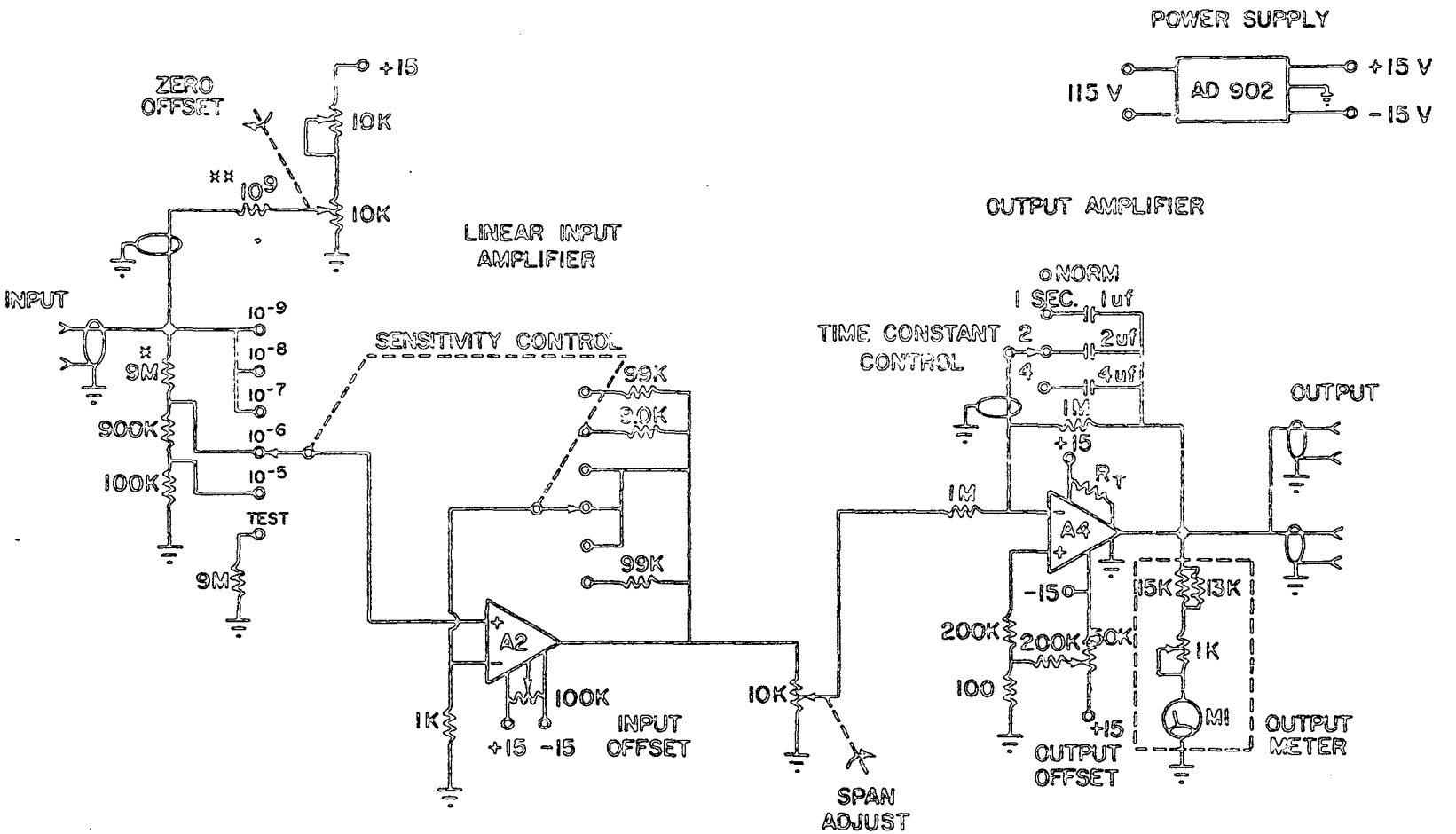

NOTE: ALL RESISTORS 1% METAL FILM, EXCEPT
x - 1% CARBON
xx - GLASS ENCLOSED

FIGURE 19 PHOTOMULTIPLIER TUBE LINEAR AMPLIFIER

Gain Accuracy - 1%

Input Impedance - 10^7 ohm
(effective load impedance for PM tube)

Noise - 10 μV p-p, .01 to 1 Hz (time constant-normal)

Output - 0-1 volt, recorder output jack
(5 mA max current)

Drift - Less than 1% after 1 hr warm-up

Time Constant - Normal (see Fig. 21)
1 sec, 2 sec, 4 sec

Zero Offset - 0 to 10^{-8} amps

The input current (PM tube anode current) is passed through a 10^{-7} ohm voltage divider. This voltage divider not only provides a known load resistance but on the two least sensitive ranges it provides voltage division of 10 or 100 to prevent overload of the input stages of the amplifier.

The voltage drop across the divider is then sensed by a varactor bridge operational amplifier. This particular unit, the Analog Devices 311J, was selected for its low bias current (10^{-14} amp), low bias current drift (10^{-15} amp/°C) and high input impedance (10^{14} ohm). This amplifier boosts the lower level signals to a usable level as well as isolating divider from any loading effects.

The calibration curves for the linear scales are shown in Figure 20. The signal is fed into the output amplifier through a ten-turn linear potentiometer, which provides a continuously variable span control. Capacitors are placed across the feedback resistor in the output amplifier to provide filtering to reduce high frequency noise and smooth the output. A four-position switch selects the proper capacitor

FIGURE 20. AMPLIFIER OUTPUT VOLTAGE VERSUS INPUT CURRENT FOR LINEAR ARRAYS
INPUT UNITS
0 0.1 0.2 0.3 0.4 0.5 0.6 0.7 0.8 0.9 1.0
OUTPUT VOLTAGE (VOLTS)
0 0.1 0.2 0.3 0.4 0.5 0.6 0.7 0.8 0.9 1.0
INPUT UNITS
1. 10^{-5} AMPS - SENSITIVITY SWITCH POS. 1
2. 10^{-6} AMPS - SENSITIVITY SWITCH POS. 2
3. 10^{-7} AMPS - SENSITIVITY SWITCH POS. 3
4. 10^{-8} AMPS - SENSITIVITY SWITCH POS. 4
5. 10^{-9} AMPS - SENSITIVITY SWITCH POS. 5
6. 10^{-9} AMPS - SENSITIVITY SWITCH POS. 6

for a time constant of normal, 1, 2, or 4 seconds. The amplifier band-width for the normal position of the time constant control is shown in Figure 21.

The effectiveness of the filters were checked by applying step functions to the input and recording the output either on a scope with camera or on a strip chart recorder. These are shown in the scope photographs in Fig. 22 for time constant settings of normal and 1 sec, respectively. The upper trace is the output response, the input waveform is shown in the lower trace. The horizontal sweep and vertical gain are identical in each illustration.

The output is brought out of the amplifier box through two BNC connectors connected in parallel. The front panel meter is connected to one and a rear panel recorder output jack is connected to the other.

Zero offset or base line adjustment is provided by a bucking voltage fed into the top of the 10^7 ohm PM tube anode load. This is controlled by a 10 turn linear potentiometer and is adjusted for zero offset at zero reading on the dial, and provides linear offset up to 10^{-8} amps at a dial setting of 100.

The unit is completely self contained. An Analog Devices 100 mA $\pm$ 15 volt power supply allows the unit to be operated directly from 115 VAC. It is enclosed in an aluminum box with removable side plates and switch shafts long enough to reach through the front panel.

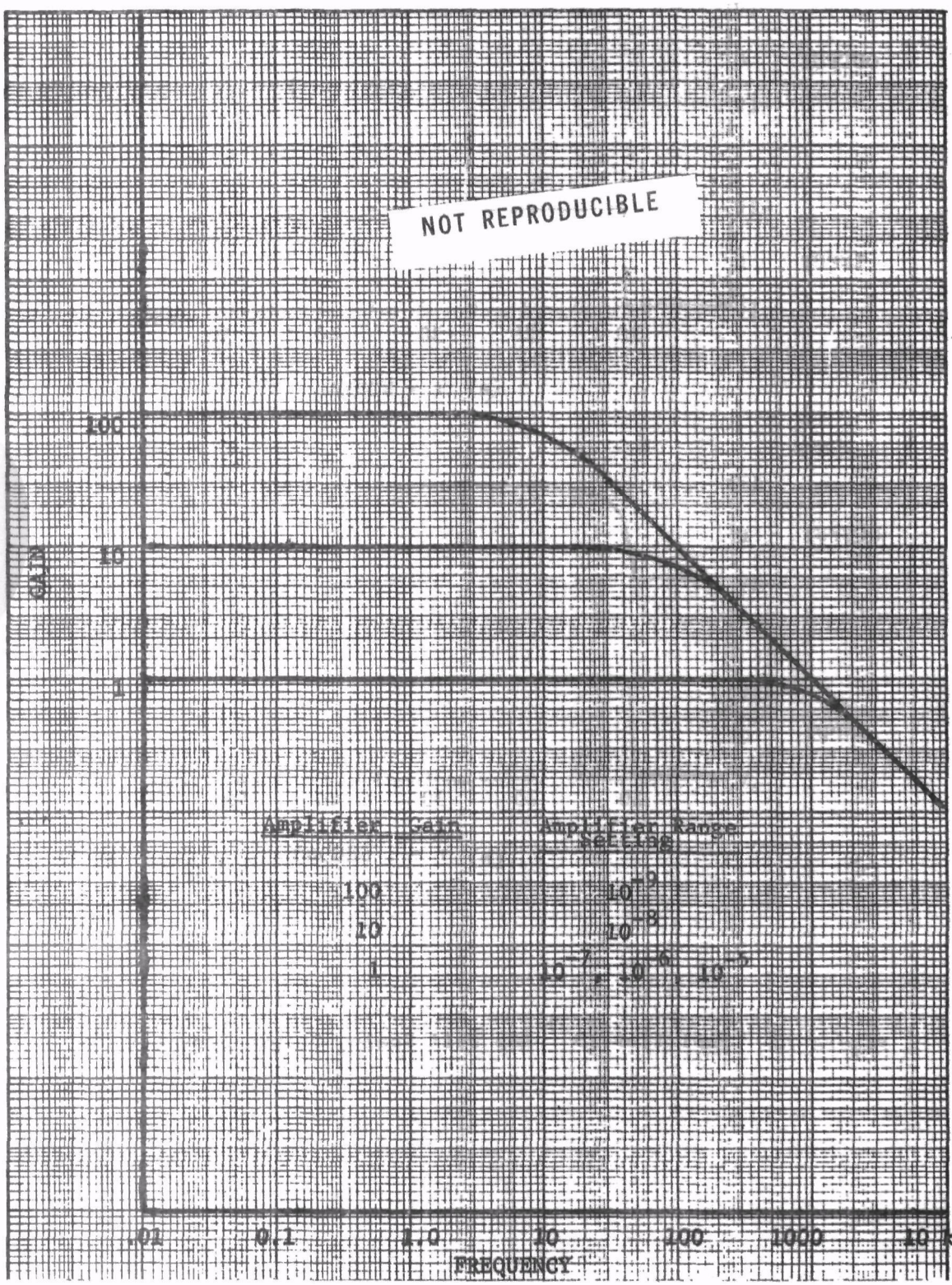

Figure 21. Frequency Response of Amplifier for Various Gain Settings

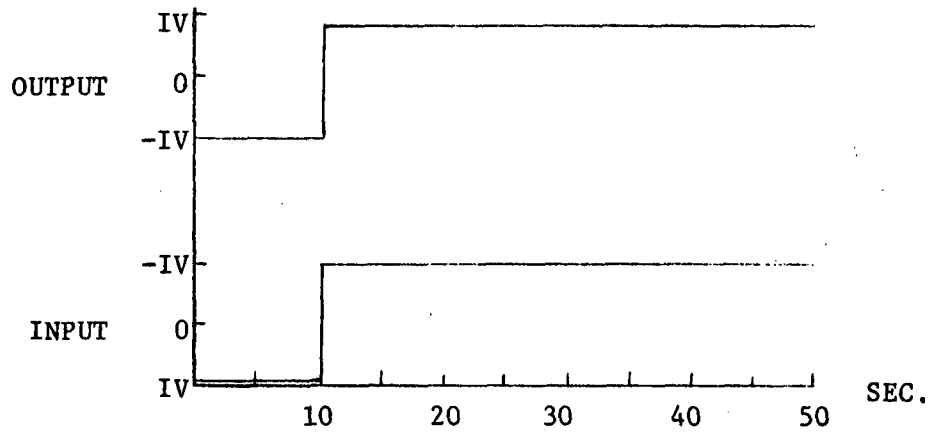

(a) τ = NORMAL

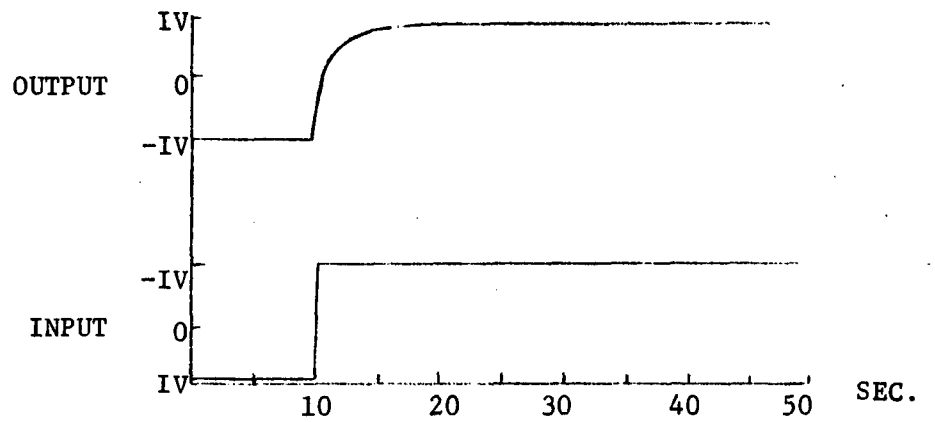

(b) τ = 1 SECOND

Figure 22. Amplifier 10^{-7} Amp Full Scale, Output Sensitivity XI

Standard maintenance and calibration procedures for the amplifier are given in Appendix B.7.

3.7 Signal Conditioner

The purpose of the signal conditioning unit is to sample the amplifier output signal from the amplifier at the appropriate points in time; i.e., in the measure, calibrate and purge modes, and properly combine these signals in such a way that the resulting signal is a smoothed continuous value which has been corrected for base-line and calibration values.

A diagram showing the signal and sampling time-relationship is presented in Fig. 23, a functional circuit diagram is shown in Figure 24. The normal time-sampled signal, consisting of 75 sec calibrate, 75 sec purge, 75 sec measure and 75 sec purge constitute one complete sampling cycle. Timing signals for the sample and hold amplifiers are shown as the control inputs - calibrate, purge and measure, respectively. These control signals initiate the reset condition in which the sample and hold amplifier acquires the new input signal and then holds this signal at its output until the next reset signal.

As illustrated in the functional diagram the purge signal is subtracted from the calibrate and measure signals and the resultant signals are presented to the inputs of the analog divider as c-p and m-p, respectively. The subtraction is accomplished in the differential amplifiers. The output of the analog divider is, effectively, $\frac{m-p}{c-p}$. Thus, as the calibration signal decreases,

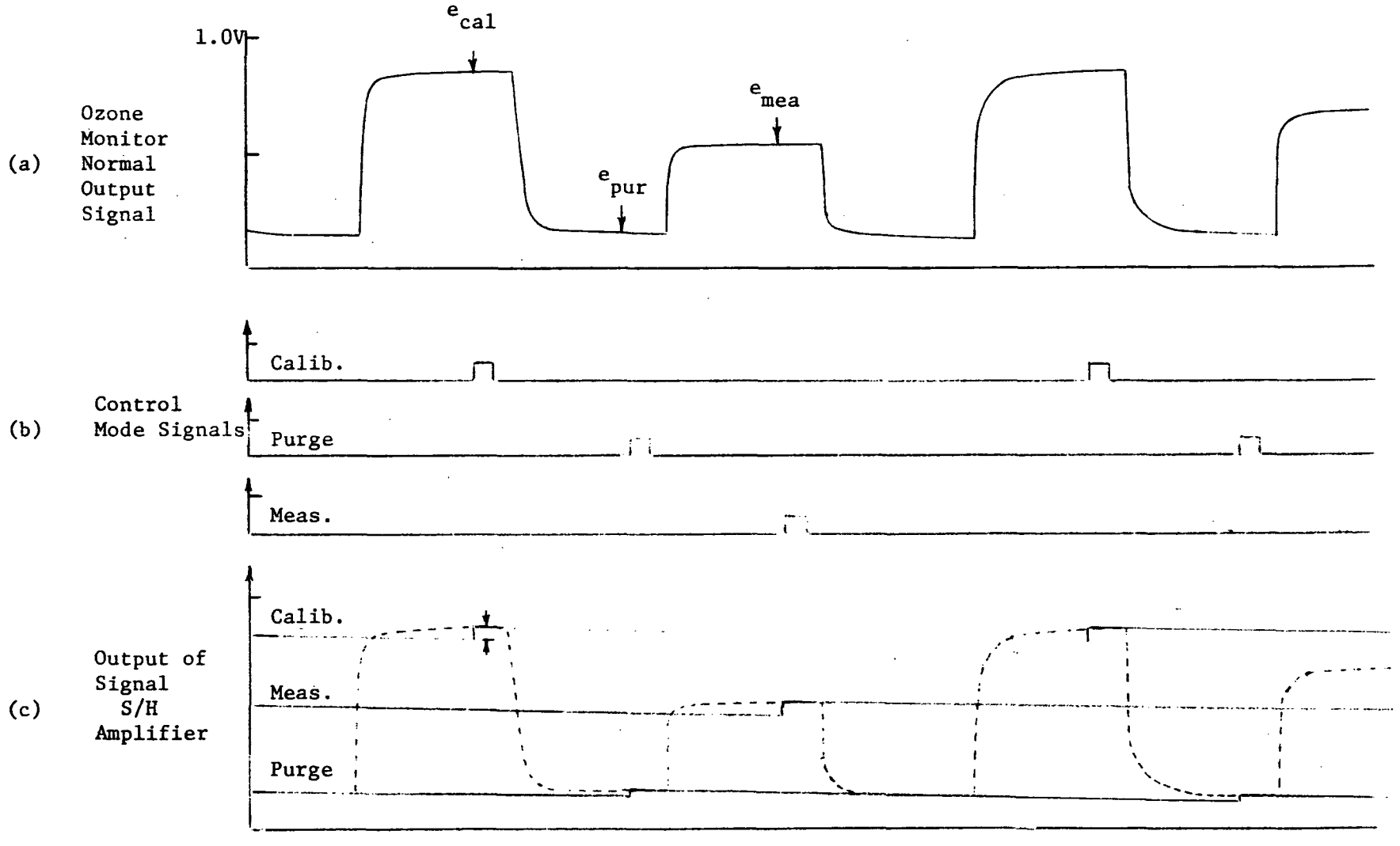

Figure 23. Signal and Timing Waveforms

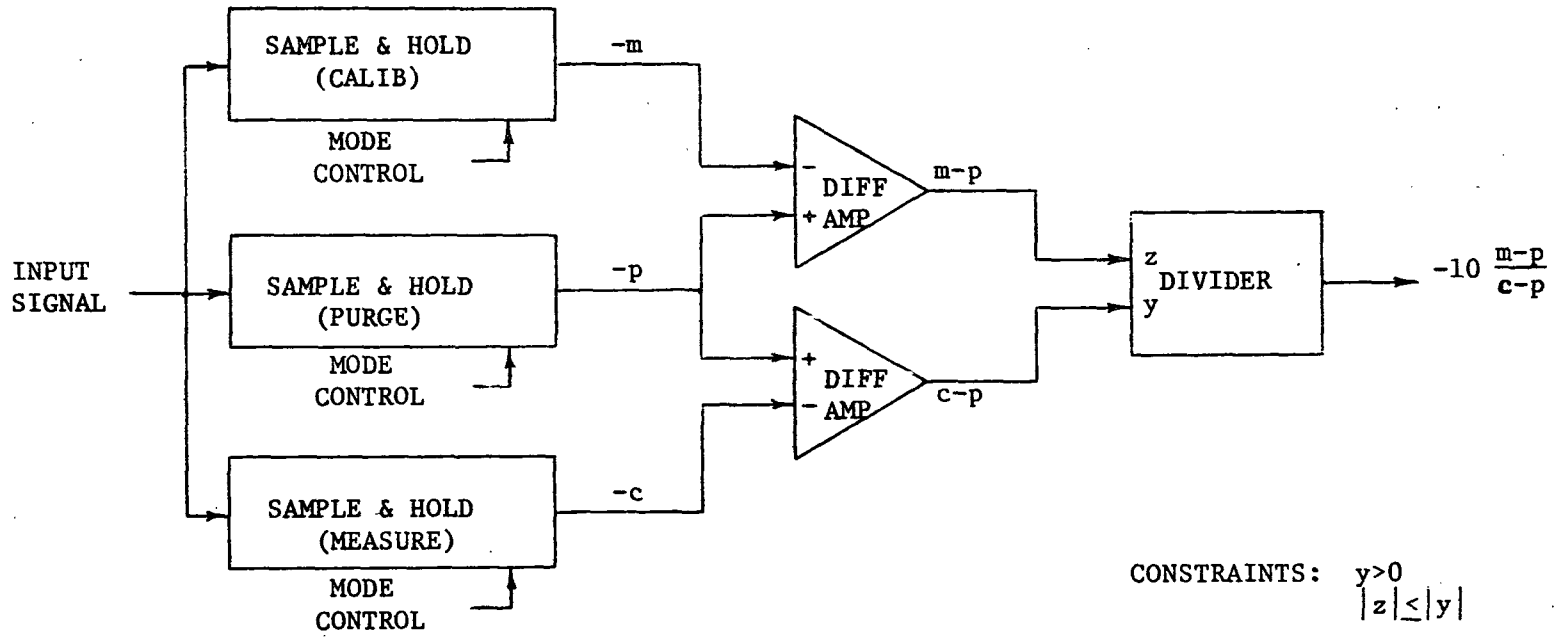

FIGURE 24 - BASIC SIGNAL CONDITIONING CIRCUIT

(as one would expect it to do due to disk delay) then, for a given concentration of ozone, the measure signal is automatically corrected. That is, initially a calibration is made and a given concentration of ozone produces a certain output signal; as conditions change, such as the decay of the disk then the output signal is corrected to produce the same value for a given concentration of ozone.

An output amplifier and filter combination is used to smooth the discontinuities in the signals due to the discreet time sampling characteristics of the sample and hold amplifier. The output is a continuous signal representing the ozone concentration for a fraction of each 5 min cycle.

The detailed circuit diagram for the signal conditioner unit is shown in Figure 25. The normal output signal from the ozone meter; i.e., the cyclic signal shown in Fig. 23(a), is amplified by the X10 input amplifier and this signal is presented simultaneously to all three inputs of the sample and hold (S/H) amplifiers. The S/H mode control signals are obtained from the timing & control unit. The output of the S/H amplifier is -10 V for a normal input to the system of 1.0 V. These S/H signals are presented to the respective inputs of the two difference amplifiers. Since one of the constraints of the analog divider network is that $|m-p| \leq |c-p|$ a ÷10 network was inserted in the output of the m-p difference amplifier. This accomplishes several things; it satisfies the constraint up to an effective value of m≈10(c) which allows one to keep the calibration signal at a reasonable level and it cancels

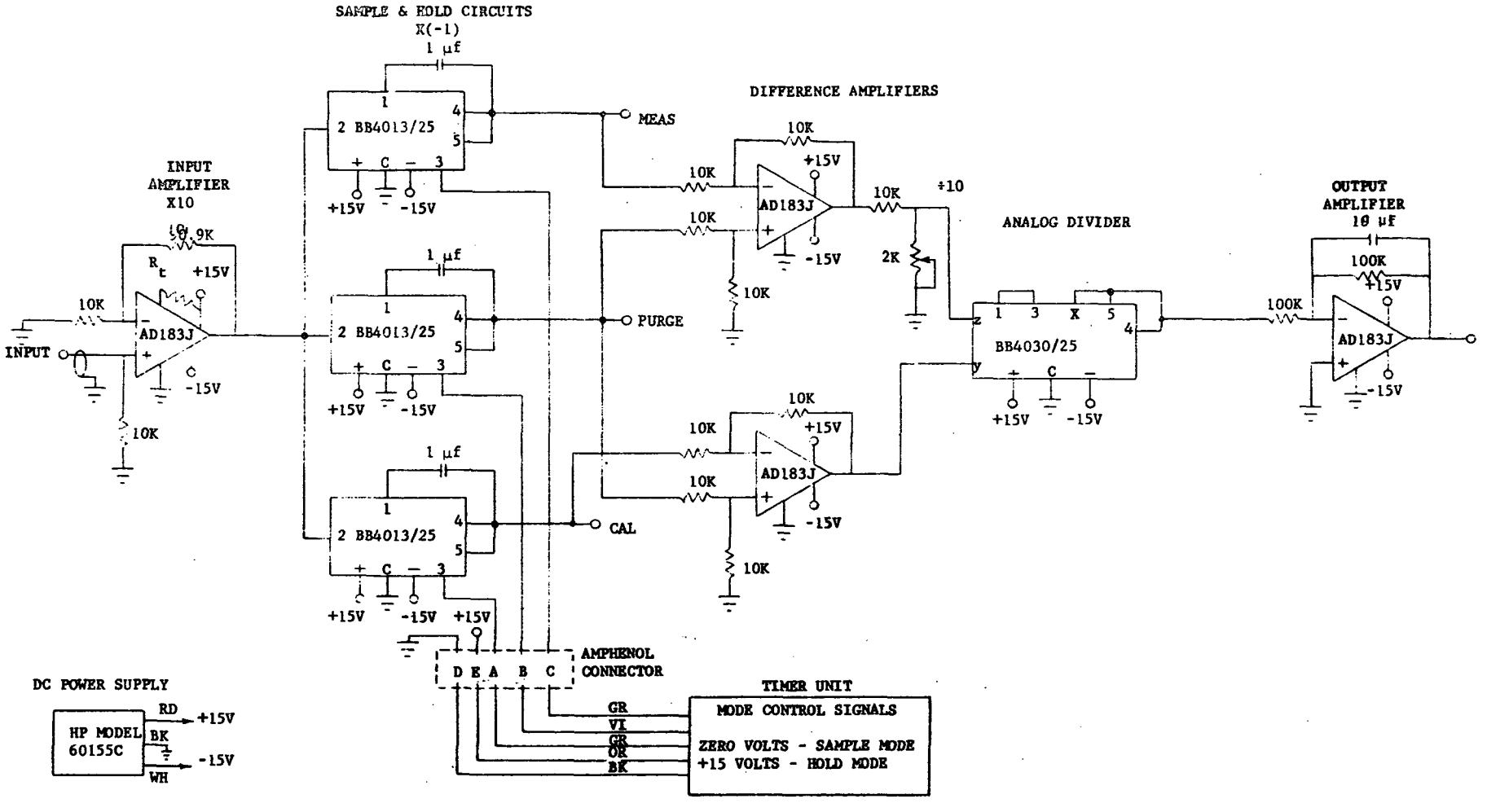

Figure 25. Signal Conditioner Circuit

the factor of 10 existing in the analog divider output. The output amplifier converts to a positive going signal and provides for some smoothing of the inherent **step** function response of the S/H amplifiers during the updating period.

APPENDICES

Appendix		Page
A.	INSTALLATION AND OPERATION	A-1
	A.1 Preliminary Set-Up Procedure	A-1
	A.2 Turn-on Procedure	A-2
	A.3 Operational Checks and Adjustments	A-2
B.	MAINTENANCE, CALIBRATION AND ADJUSTMENT PROCEDURES	B-1
	B.1 Main Chassis Removal	B-1
	B.2 Disc Replacement	B-1
	B.3 Flow Rate Adjustment and Check	B-2
	B.4 Filter Maintenance	B-4
	B.5 UV Lamp Replacement	B-4
	B.6 Timer Adjustment	B-6
	B.7 Amplifier Calibration	B-8
	B.8 Signal Conditioner Calibration Check	B-9
	B.9 Calibration Range Change	B-9
	B.10 PM Tube Replacement	B-11
	B.11 Calibration Procedures for the Calibration Unit	B-12
	B.12 Chemiluminescent Disk Preparation	B-17
C.	PARTS LIST	C-1
	C.1 Detector Assembly	C-2
	C.2 Calibration Assembly	C-2
	C.3 Plumbing Assembly	C-3
	C.4 Timing Control	C-3
	C.5 Amplifier Assembly	C-4
	C.6 Signal Conditioning Unit	C-5
	C.7 Chassis and Cabinet	C-5
	C.8 Interlock Circuit	C-6
	C.9 AC Power	C-6
D.	SUBSYSTEM MANUALS	D-1
E.	ENGINEERING DRAWINGS	E-1

APPENDIX A

INSTALLATION AND OPERATION

A.1 Preliminary Set-up Procedure

(1) Access to Main Chassis

(a) Remove screws from front panel.

(b) Check for freedom of movement of air inlet line, signal cable, and power cable at rear of unit, or disconnect as appropriate.

(c) Slide chassis out until it stops.

NOTE: A safety chain restrains the chassis from extending beyond the first stop. This should not be removed unless chassis is to be removed completely from cabinet.

(2) Install Photomultiplier Tube

(a) Install the PM tube in the PM tube housing and mount on detector unit.

NOTE: Care should be taken not to expose the PM tube to strong light; excessive exposure requires approximately 24-48 hours for dark current to decay to normal value.

(3) Attach the HV and signal coax cables to the PM tube housing.

(4) Remove shunt wire from output meter terminals. (This shunt wire is a precautionary measure taken in shipping to prevent damage).

(5) Visually Inspect unit for any obvious damage.

(6) Slide main chassis back in place.

(7) Install chemiluminescent disc (Appendix B.2).

CAUTION: The instrument is designed for normal operation with both front and rear panels in the closed condition. Opening either end will result in a temperature rise in certain components. Complete removal of chassis is satisfactory providing ventilation below chassis is provided.

A.2 Turn-On Procedure

(1) Close shutter - full closure indicated by AMBER Lamp.

(2) Set SENSITIVITY to 5.

(3) Set SPAN to 0.

(4) Set TIME CONSTANT to 1 sec.

(5) Adjust HV to recommended value for gain of 200 A/L (see specification sheet).

(6) REPLACE HV Power Supply Cover.

(7) Turn AC POWER switch to ON.

NOTE: Initial operation procedures should include purging of the air intake lines with high levels of ozone to destroy contaminants.

A.3 Operational Adjustments/Checks

(1) Adjust LAMP CURRENT to 17.5 mA.

(2) Set FLOW to 200 ml/min. (see spec sheet for proper flowmeter settings) (See Section B.3 for procedure)

(3) Check dark current - note value.

(4) Open shutter - full open indicated by RED Lamp.

(5) Switch to CAL mode - note value.

(6) Switch to desired operating mode.

(7) Set amplifier controls to desired range and time constant.

APPENDIX B

MAINTENANCE, CALIBRATION AND ADJUSTMENT PROCEDURES

B.1 Main Chassis Removal

(1) Remove screws from front panel.

(2) Slide chassis out a few inches and disconnect the safety chain.

(3) Disconnect HV power supply AC cord and output cable, and fan power cord.

(4) Slide chassis out until safety catches on chassis slides stop movement. (The weight of the instrument should be supported by the operator.)

(5) Depress safety catches on slides and remove chassis from cabinet.

NOTE: When operating unit out of cabinet, raise chassis 1"-2" off bench for increased component ventilation.

B.2 Disc Replacement

(1) Move shutter control to CLOSED position. CLOSED indicator light must be on.

(2) Open disc access door and lower disc holder by turning knob counterclockwise until holder stops. Lift holder enough to clear locating pins and pull unit forward. Be careful not to drag against top plate of unit.

(3) Replace old disc with new one making note of elapsed time.

(4) Place holder back in unit using two locating pins on bottom plate to correctly position holder. Be sure Neoprene outlet hose is not pinched behind holder, and O-ring is properly seated.

(5) Turn knob clockwise until holder is firmly seated. If possible, the system should be checked for leaks each time the disc is changed to avoid erroneous data.

B.3 Flow Rate Adjustment and Check

(1) The proper flow rate is 200 ml/min.

(2) Adjustment of the air sampling rate is accomplished with the fine control valve (front panel mounted) and the coarse valve (located just behind the front panel).

(3) Flow rates at the ambient air sampling port should be checked periodically, either with a mass flow meter device or with a rotameter capable of measuring 200 ml/min with an accuracy of $\pm$ 2%. It is recommended that where an external flow meter is available that it be used to make final adjustments to the air flow.

(4) A calibration curve for the flowmeter is shown in Fig. B-1.

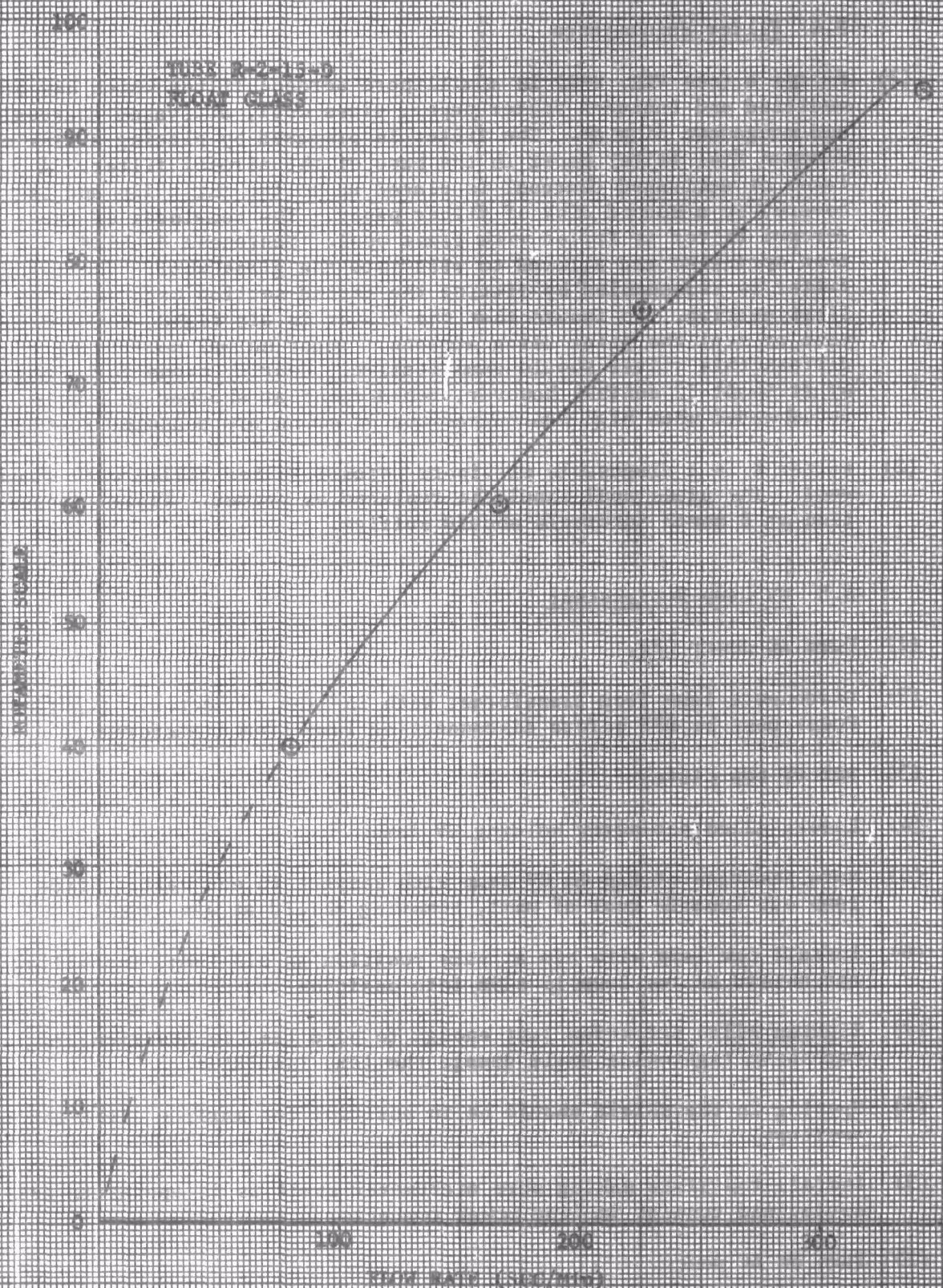

FIGURE B-1. FLOWRATE VERSUS ROTAMETER SETTING

B.4 Filter Maintenance

(1) Filter A (see Fig. B-2) is a millipore aerosol filter which has been modified and includes filter paper, glass wool, activated charcoal, and manganese dioxide. The filter is prepared by placing a disk of Whatman #541 filter paper in the base of the aerosol filter. A layer of activated charcoal is placed up to the first lip and is covered by a second disk of filter paper. The remainder of the aerosol filter is filled with glass wool. Manganese dioxide is then sprinkled and allowed to sift into the glass wool. The aerosol filter is reassembled by fitting the second section back into the first section. To insure that the filter is air tight, cover with tape or seal the joint using acetone. Under normal monitoring conditions this filter should quantitatively destroy ozone for a period of at least 12 months; however, replacement at shorter intervals is recommended when high concentrations of ozone are measured routinely.

(2) Filter B is a disposable millipore aerosol filter filled with glass wool. The glass wool should be replaced as needed. Visual inspection at 6 month intervals should suffice.

B.5 UV Lamp Replacement

(1) Turn AC power OFF.

(2) Disconnect lamp from transformer with in-line connector. (CAUTION: Power must be OFF before disconnecting lamp from transformer.)

(3) Remove top plate.

(4) Loosen Allen set-screw holding UV lamp.

(5) Note position of tip on UV lamp with respect to end wall. Slide lamp out towards rear of unit, removing shield at same time.

(6) Install new lamp with tip at same position as old lamp, installing the shield as the lamp is slid into position.

(7) Tighten Allen set-screw just enough to hold lamp in position, as excessive tightening could damage the lamp insulator.

(8) Opening in the shield should be in position for maximum light through aperture.

(9) Install top plate making sure micrometer shaft is in aperature arm socket and connect in-line power connector.

(10) Turn on AC power.

(11) Calibrate output against known ozone concentration, or use standard KI technique.

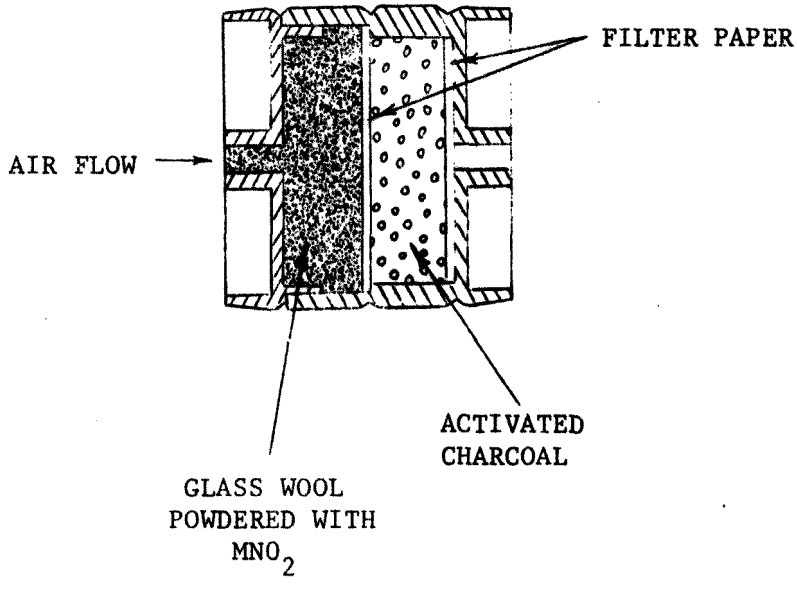

FIGURE B-2. FILTER "A" - CUTAWAY DRAWING

B.6 Timer Adjustment

B.6.1 Main Timer and Cycle Control

(1) The basic stopping time for the programming switch is controlled by the small continuous running switch. The 1 rpm allows for selection of basic stopping times from 1 sec intervals to 60 sec intervals.

The unit is presently adjusted for 5 sec intervals.

(2) The 7 channel programming switch is stopped at 5 sec intervals as indicated in (1). Each function is color coded as follows:

Red activators - purge mode (25 sec--twice per cycle)

White activators - calibrate mode (25 sec--once per cycle)

No activators - measure mode (25 sec--once per cycle)

Single blue activator - sample-mode (5 sec) for respective S/H amplifiers.

Additional channels used for mode control lights and event marker.

(3) The activation time for the respective modes may be readily changed by means of adding or deleting the activators in the respective channels.

B.6.2 Purge Time

(1) The purge timing cam is mounted on a shaft by means of a heavy duty friction unit which allows for each finger adjustment of the timing sequence.

(2) The cam may be set for "on-time" of from 2% to 90% of the total overall time cycle.

(3) The cam opening or "on-time" may be adjusted by loosening the cam screw and turning the movable cam to the required degree of opening and then re-tightening the screw.

(4) See Fig. B-3 for identification of components.

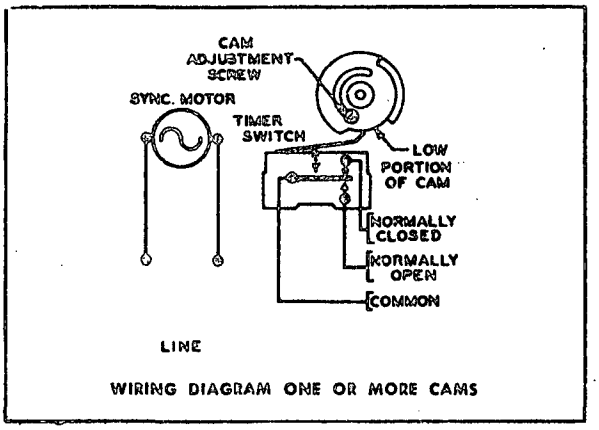

FIGURE B-3. TIMER ADJUSTMENT

B.7 Amplifier Calibration

It is not necessary to remove the amplifier from the unit for this calibration. Simply disconnect the input and attach a voltmeter to the output.

Equipment needed - 10 mV and 10 V source
- Voltmeter - HP-425, or equivalent
- Oscilloscope - Tektronix 547, or equivalent.

All adjustments are located on top of the unit and labeled.

(1) Turn the unit on and allow 30 min for amplifier to stabilize. Leave the input disconnected. Then, turn the sensitivity to 10^{-9}, F.S. output to X1 and time constant to NORM. Adjust R1 for zero output.

(2) Turn the sensitivity control alternately between 10^{-5} and 10^{-9} while adjusting R1 for a minimum change in output between switch settings.

(3) Set the sensitivity control at 10^{-5} and adjust R2 for zero output.

Amplifier Disassembly - To remove the amplifier from the unit, remove the three knobs and three screws from the front panel. Next disconnect the three BNC connectors from the top of the amplifier and unplug the power cord. The back of the amplifier can now be raised and the unit pulled out over the timing chassis.

B.8 Signal Conditioner Calibration Check

(1) Disconnect input to signal conditioner and reconnect a 1.0 V dc signal.

(2) Disable timer by removing AC power. Rotate timer to desired position manually.

(3) Measure with DVM the voltage at each sample and hold output; should be 10.0 V $\pm$ 1%.

(4) Check the ÷ 10 at the output of the upper difference amplifier.

(5) Under normal operating conditions, read the respective S/H signals and calculate the (m-p)/(c-p) ratio. Measure the output signal and compare to calculated value.

B.9 Calibration Range Change

(1) Turn AC power off.

(2) Disconnect safety chain from rear of chassis and pull chassis forward until calibration unit is completely exposed.

(3) Remove top plate.

(4) See Fig. B-4 for following steps:

a. To adjust for lower calibration range, set micrometer at 10, loosen the two 4-40 retaining screws and rotate aperture cover counter-clockwise until minimum aperture opening is obtained.

b. To adjust for higher calibration range, set micrometer at 0, loosen the two 4-40 retaining screws and rotate aperture cover clockwise until maximum aperture opening is obtained.

(5) Tighten the aperture cover retaining screws and install top plate, making sure micrometer shaft is in aperture arm socket.

(6) Calibrate output against known ozone concentration, or use standard KI technique.

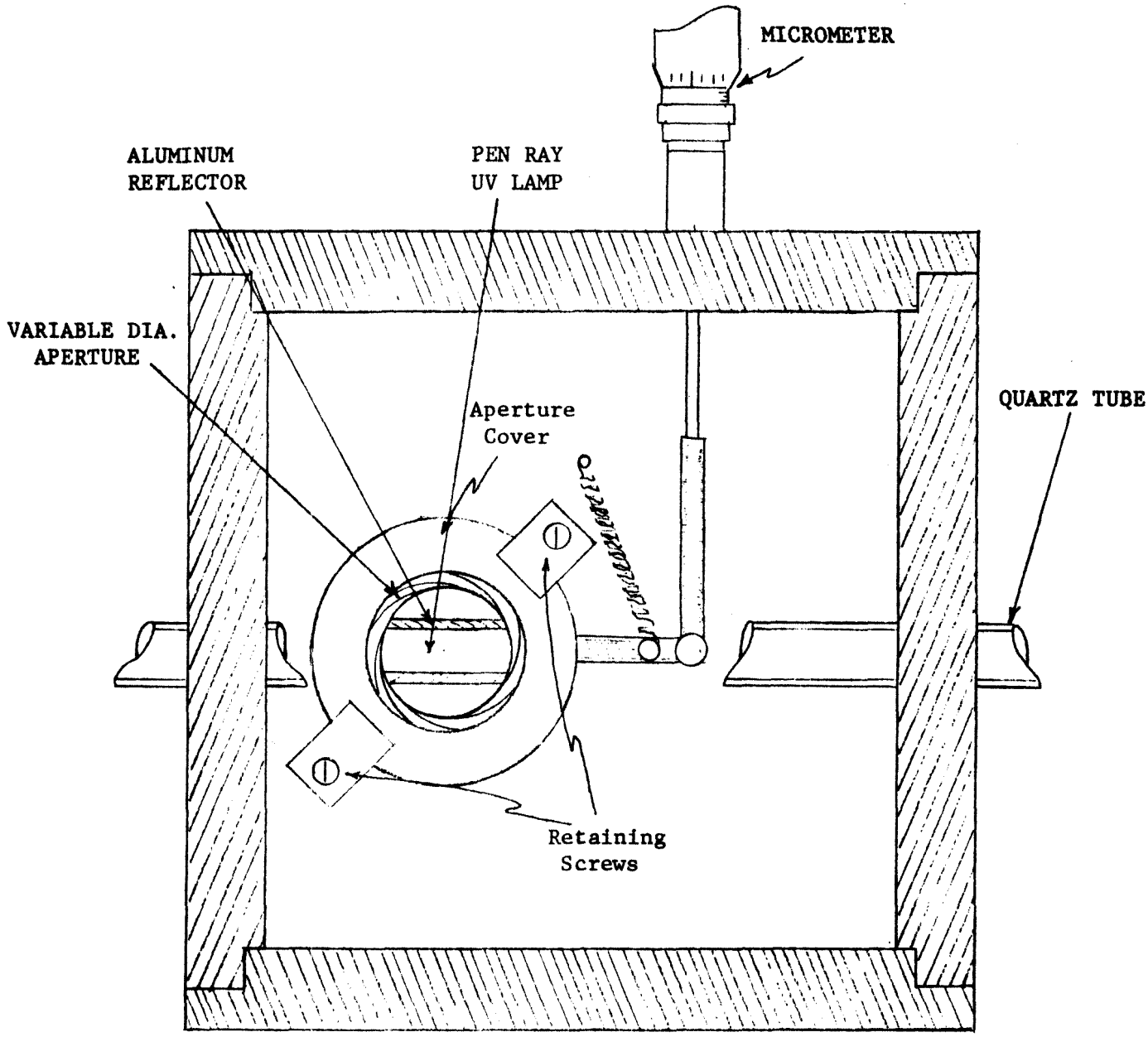

Aperture Adjustment Range	
Small:	.047" to 0.5" dia.
Large:	.5" to .984" dia.

FIGURE B-4. CALIBRATION UNIT (side view)

B.10 Replacement of PM Tube

(1) Turn off AC power.

(2) Remove screws from front panel and slide the chassis out until it stops.

(3) Disconnect the HV power supply and signal cables from the top of the PM tube housing.

> CAUTION - When handling PM tubes, avoid exposing the tube to light. This will insure a normal dark current level for the tube. If exposed, allow 24-48 hours for return to normal level.

(4) Remove three 8-32 screws from the PM housing flange and lift the complete housing assembly off the detector unit.

(5) Remove three 6-32 screws from the top of the housing (evenly spread on outside rim) and remove the outer housing.

(6) Remove the Mu-metal shield from the PM tube and then unplug the PM tube.

(7) Install the new tube, reversing the above procedure, being careful not to dislodge the metal grounding braid near the end of the Mu-metal shield nearest the cathode at the PM tube.

NOTE: Light leaks will show up as excessive dark current. Care should be exercised in assemblying the housing.
(a) It may be necessary in some case to use black tape to seal the joints of the housing around the BNC plug end.
(b) An O-ring in the mounting flange of the tube provides an adequate light-tight seal for the open end of the housing.
(c) A check should be made around the PM tube shutter to determine the susceptibility to light leakage.

B-11 Calibration Procedures for the Calibration Unit

(1) Apparatus - The unit in test was placed in line with an ozone-moisture trap of Drierite and No. 40 mesh charcoal, a mass flowmeter, two 25 ml graduated all glass inpingers (open end nozzle type), an air flow control valve and air pump (refer to Fig.B-5). Quartz tube to impinger connection was accomplished by means of a teflon reducing union, glass tubing and a ground glass joint, slightly lubricated with Kel-F No. 90 stopcock grease. A 12 VDC power supply was used to activate the internal shutter and the UV lamp current was adjusted by means of an autotransformer and a Pen Ray 10 mA transformer. All tests were timed with an electronic timer and AC power was regulated at 117 volts.

Air flow was metered with a Hastings mass flowmeter (a thermoelectric type sensor) with a range of 0 to 300 standard ml/min, readable to 1.5 ml/min and stable within 2% to 250psia.

(2) Reagents - The absorbing reagent was prepared with reagent grade chemicals - 13.61g potassium dihydrogen phosphate, 14.2g of anhydrous disodium hydrogen phosphate and 10.0g of potassium iodide, diluted to 1.0 liter with distilled water which had been passed through two ion exchange columns and a millipore filter. Prior to initial use, each new batch of absorbing reagent was aged for 24 hrs. in the dark and at room temperature.

Standard iodine solution, 0.05N, was prepared by carefully weighing 16.0g of potassium iodide and 3.173g of iodine and diluted to exactly 0.5 liter.

(3) Procedure - Exactly 10 ml of the absorbing reagent was pipetted into each of two tandem impingers, carefully shielding the solution from light whenever possible.

Ambient air was aspirated through the assembled train for sampling periods of 15 to 30 minutes, at flow rates between 50 to 300 ml/min. Immediately following sampling, the exposed absorbing solution was transferred first to a graduated cylinder, then to a 1 inch diameter colorimeter cuvette. At the lower flow rates (i.e., less than 300 ml/min), no appreciable evaporation was observed in either impinger.

(4) Analysis - Absorbance was determined within 10 to 15 minutes after sampling, with a Bausch and Lomb Spectronic 20 Spectrophotometer, at 352 nm and with unexposed absorbing reagent as the reference.

Standardization was checked each day during the test, with an 0.0025N iodine standard solution prepared by pipetting 5 ml of the 0.05N standard stock solution into a volumetric flask and diluting to 100 ml with absorbing reagent. A series of 0.2, 0.4, 0.6, and 0.9 ml portions of the diluted standard iodine were pipetted into volumetric flasks and diluted to 25 ml with absorbing reagent and the absorbance of this known series was determined at 352 nm.

Calculations - Absorbance and calculated normality of the standard iodine solution was plotted (refer to Fig.B-6), and the standardization factor, M, was determined from the normality of the standard solution at absorbance 1.0.

O_3 (ppm) = Sample absorbance x M/V (Ref. A-1)

where: M (standardizations factor) = $1.224 \times 10^5 I$
I = Intercept at absorbance 1.0 and
V = Volume of sample in liters

The above calculations were executed, assuming no deviation from the standard conditions of 760 mm of mercury and 25°c, and the air sample volume was used directly as recorded.

Then: Volume = 24.47 liters
1μ I_2 = 24.47 µl O_3 and
10 ml 1N iodine = 5×10^3 µmole I_2 = 1.224×10 µl O_3

Procedure efficiency - Varying the sampling time, not exceeding a maximum of 30 minutes or a minimum of 15 minutes and obtaining the absorbance reading at intervals of 10 to 15 minutes after sampling, the error observed between consecutive samples was negligible. Variations did occur among successive batches of absorbing reagent, which gave only 93% reproducibility.

Ref. B-1 Saltzman, B. E., Determination of Oxidants (including Ozone): Neutral Buffered-Potassium Iodide Method, Public Health Service Publication No. 999-AP-11.

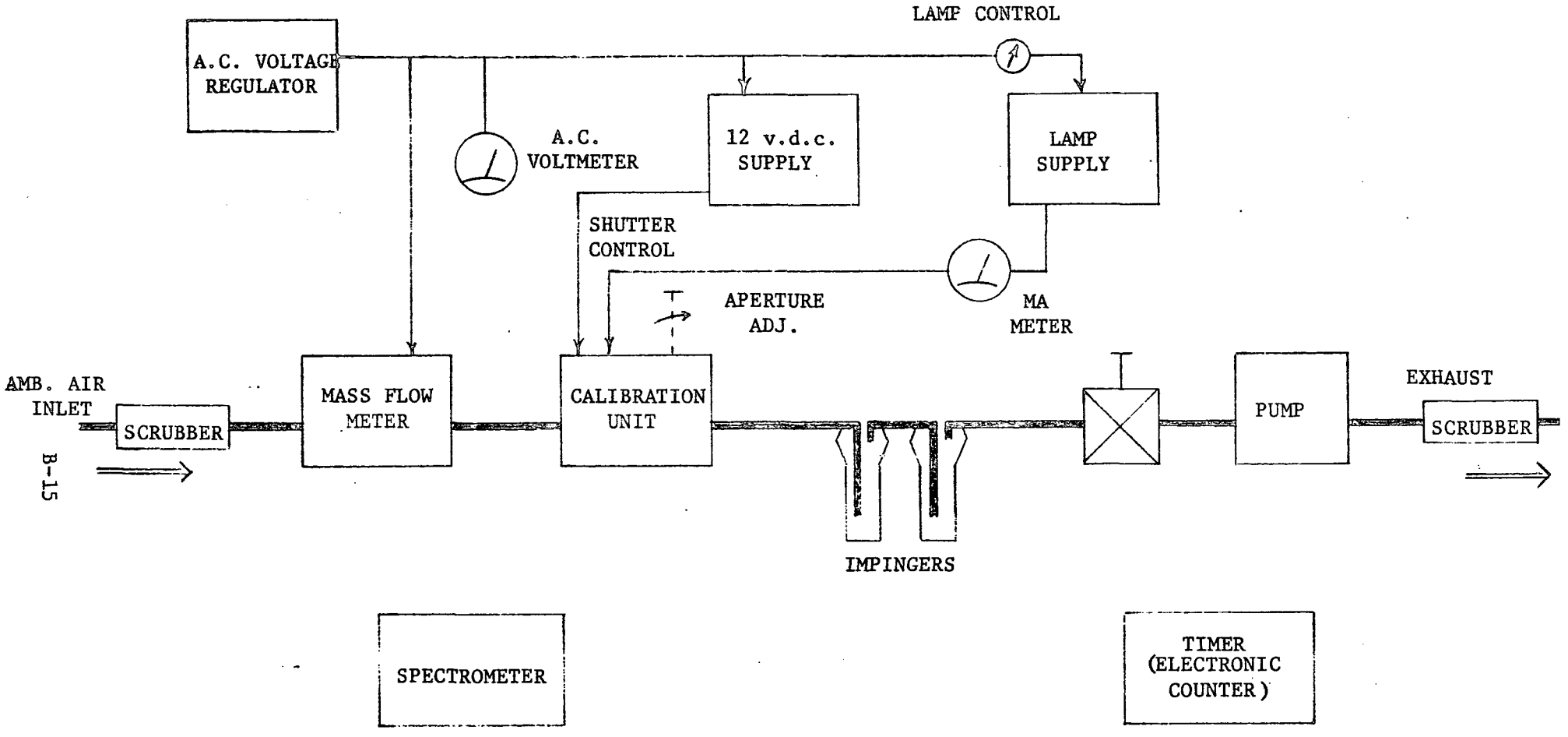

FIGURE B-5. CALIBRATION UNIT, CALIBRATION FUNCTIONAL DIAGRAM

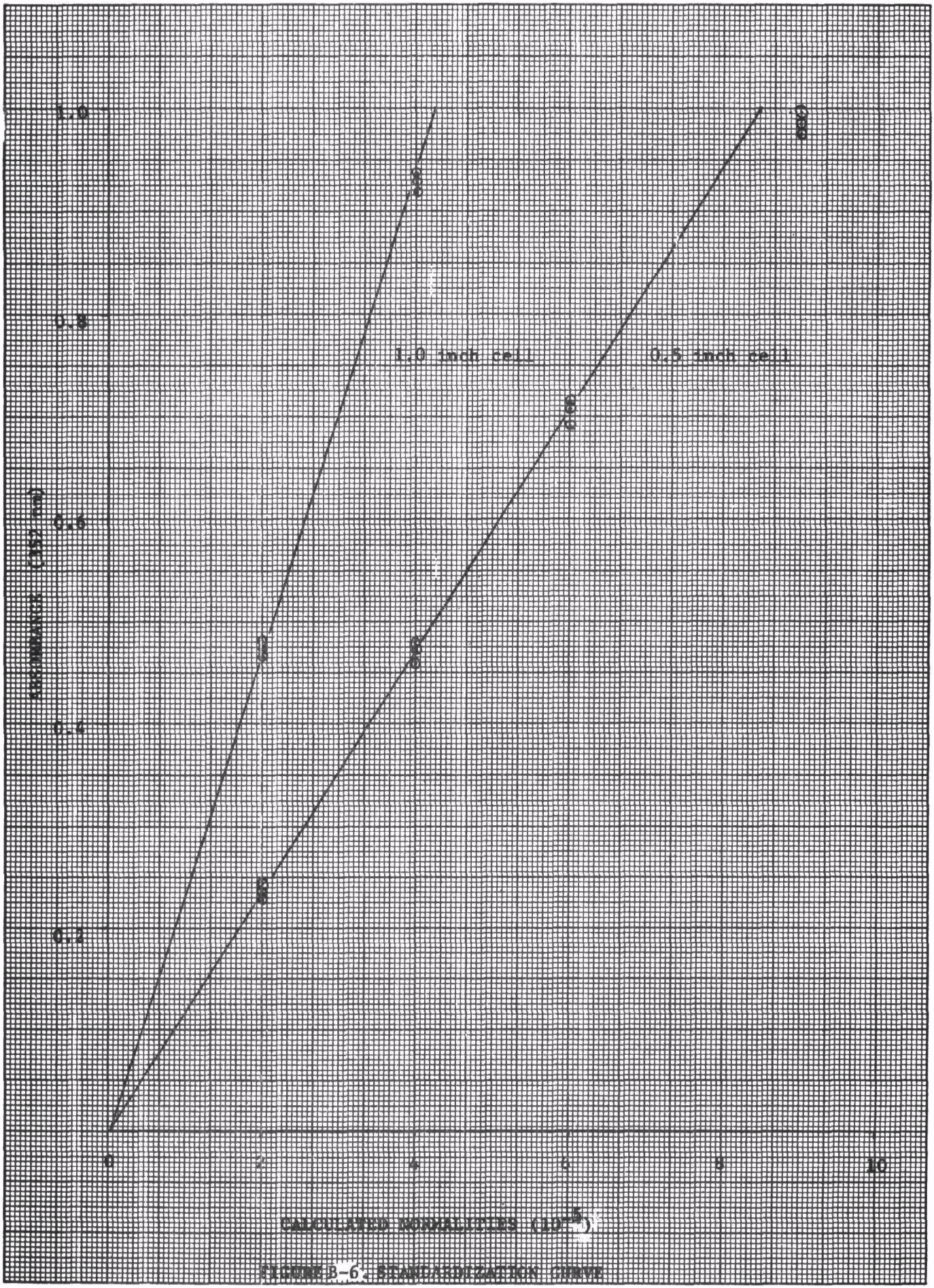

FIGURE B-6. STANDARDIZATION CURVE

B-12. Chemiluminescent Disk Preparation

The chemiluminescent disks are prepared by absorbing an organic dye, Rhodamine B on a finely divided silicon-gel surface which has been made moisture-insensitive by treatment with a hydrophobic agent. The high surface area material used as the substrate was Eastman thin layer chromatographic-grade silica-gel sheet, Type ECS-6061. The dye compound was Rhodamine-B,0 (the hydrochloride salt form), and the hydrophobic coating material was General Electric silicone resin, type Sr-82.

The recommended procedure for preparation of the chemiluminescent disk surface is as follows:

1. Cut 2 inch diameter disks from a silica-gel sheet and dry in an oven for 1 hour at 110 to 120°C.

2. Prepare a 10% (W/W) solution by diluting Sr-82 (60% resin) 1:6 with benzene. Immediately after drying, dip the disk in the hydrophobic resin solution for 1 minute. Remove from the solution and drain off the excess. Place disks into oven and dry for 24-48 hours at 110-120°C.

3. After removing dried disk from oven, immediately dip the disk for 1 minute in a solution containing 0.1 gram per liter of Rhodamine-B,0 in acetone. Drain off the excess solution and return disk to oven for about 5 minutes to evaporate off the remaining acetone. Disks prepared in this way are insensitive to moisture but should be protected from the atmosphere, and bright light since the dye compound may undergo slow oxidation. The best practice is to store them in a desiccator.[1]

---

1 Hodgeson, J. A, Krost, K. J., O'Keeffe, A. E, and Stevens, R. K., "Chemiluminescent Measurements of Atmospheric Ozone," Anal. Chem., Vol. 42, No. 14, December (1970). B-17

APPENDIX C

PARTS LIST

A parts list for each of the major sub-assemblies is given in this appendix. The non-standard parts are indicated by an RTI drawing number. All other components are identified by manufacture and manufacturers' part number. Most of the parts listed are self-explanatory.

The high voltage power supply (Power Design, Model 2K-10), the ± 15 Vdc supply (HP Model 60155C), and the 12 Vdc supply (Deltron Model C12-2.8) are not included since they are fully described by their respective instruction manuals, which are included in the sub-systems manuals.

C.1 Detector Assembly

Part No.	Description	Manufacturer	Mfg. Part No.
001	Housing	RTI	Dwg. No. 001
010	PMT Housing	Pacific Photometric	62 (modified length)
020	Photomultiplier	EMI	9558C
030	High Voltage Power Supply	Power Designs Inc.	2K-10
040	Quartz Window (2½ in. diam. x 1/16 in. thick)	Thermal American Fuzed Quartz Company	Vitreosil
050	Jack	Precision Scientific Co.	Little Jack

C.2 Calibration Assembly

Part No.	Description	Manufacturer	Mfg. Part No.
100	Housing	RTI	Dwg. No. 100
120	UV Lamp	Pen-Ray	11SC-1B
130	Lamp Power Supply	Pen-Ray	SCT-3
140	Auto-transformer	Staco	121
141	Knob	Raytheon	70-4-26
150	Milliammeter	Triplett	430
160	Shutter Solenoid	Ledex	H-1079-032
170	Iris Diaphragm	Edmund Scientific	681
180	Micrometer Control	Starrett	440-3RL
190	Quartz tube (standard normal wall 10.2mm o.d. x 8" L)	Thermal-American Fuzed Quartz Company	Spectrosil

C.3 Plumbing Assembly

Part No.	Description	Manufacturer	Mfg. Part No.
1	Bulkhead Adapter	Swagelok	400-A1-4
2	Male Elbow	Swagelok	400-2-2
3	All Tube Tee	Swagelok	40-3
4	Valve, fine metering	Nupro	B-4MA
5	Valve, fine metering	Nupro	B-4M
6	Male Connector	Swagelok	400-1-4
7	Tie connector, teflon	Chemplast	T-T0404-F
8	Reducing Union	Chemplast	T-S0604-F
9	Solenoid Valve	Valcor Engineering	51C70HT34-6A
10	Flow Meter	Brooks Instrument Division	1555-00C1A
11	Elbow (Teflon)	Chemplast	T-L0404-F
12	Pump	Neptune Products, Inc.	4K

C.4 Timing Control

Part No.	Description	Manufacturer	Mfg. Part No.
900	Chassis	Bud Radio	AC-403
T-1	Cycle Timer	Sealectroswitch Corp.	092-0166-500
TP-1	Cycle Programmer	"	092-0765-501
T-2	Purge Timer	Industrial Time Corp.	CM-10/10A24
5901	Mode Switch	Switchcraft	37061/H83P/83P
K1	Valve Relay	Potter & Brumfield	KA11DG
K2	Valve Relay	Potter & Brumfield	KA11DG
K3	Timer Relay	Potter & Brumfield	KA11DG
B1	Lamps (Mode Switch)	GE	330
B2	Lamps (Shutter & Power)	GE	328
PWR1	+ 12 VDC Power Supply	Deltron	C12-2.8

C.5 Amplifier Assembly

Part No.	Description	Manufacturer	Mfg. Part No.
500	Chassis	RTI	Dwg. No. 500
R1	100K Potentiometer	Helipot	76PR 100K
R2	50K "	Helipot	76PR50K
R7	10K Potentiometer	Bourns	3600S
R8	10K "	Bourns	3007P
R9	9 meg 1% Carbon	IRC	
R10	900K 1% Metal Film	IRC	
R11	100K " " "	IRC	
R12	1K " " "	IRC	
R13	99K " " "	IRC	
R14	9K " " "	IRC	
R20 & 21	[Trim resistors furnished with AD 183K amplifiers]		
R22	10K 10-Turn Pot.	Bourns	3600S
R23 & 24	1 meg " "	Bourns	
R25 & 26	200K " "	Bourns	
R27	1000 Meg ohm	Victoreen	
R28	10K Trimpot	Beckman	76PR10K
R29	10K Potentiometer 10T	Bourns	3600S
R27	100 ohms 1% Metal Film	IRC	
R30	15K " " " "		
R31	13K " " " "		
R32	1K Potentiometer	Helipot	76PR1K
C1	0.9 µf	Sprague	151D-904X9020W2
C2	1.9 µf	Sprague	151D-195X9035X2
C3	4.1 µf	Sprague	151D-415X9020X2
S501	Sensitivity Switch	Centralab	P-505/(3)PS-21
S502	Time Constant Switch	Centralab	P-503/(1)PS-21
A1	Operational Amp.	Analog Devices	311K
A2	Operational Amp.	Analog Devices	184J
M1	Output meter	Simpson	1150
	Knobs	Raytheon	50-4-1G
PWR1	Power Supply	Analog Devices	AD902

C.6 Signal Conditioning Unit Parts List

Part No.	Description	Manufacturer	Mfg. Part No.
500	Chassis	RTI	Dwg. No. 500
S/H1,2&3	Sample & Hold Amplifier	Burr Brown	BB4013/25
A1, 2&3	Operational Amplifier	Analog Devices	AD183J
PWR3	± 15 V Power Supply	Hewlett-Packard	60155C
R1,2,4,5 6,7,8&9	10 K Metal Film, 1% 1/4 W	IRC	
R3,10&11	100 K Metal Film, 1% 1/4 W	IRC	
C1,C2,C3	1 µf, 100V, 1%	Electronic Associates, Inc.	
C4	.10 µf	Sprague	113D-106C701500
M/D1	Multiplier-Divider	Burr-Brown	BB4030/25

C.7 Chassis and Cabinet

Part No.	Description	Manufacturer	Mfg. Part No.
701	Chassis	RTI	Dwg. No. 700
800	Cabinet	Optima	E-171920H
801	Front Panel	Optima	P-14
802	Rear Panel	Optima	P-7
803	Rear Door	Optima	D-10
804	Handles	Optima	H-14
805	Chassis Slides	Chassis-Trak	C-230-S-18
806	Fan	Rotron Mfg. Co.	Muffin Fan
401	Solenoid Valve Bracket	RTI	Dwg. No. 400
301	Clean-up Tower Bracket	RTI	Dwg. No. 300
200	Pump Mounting Bracket	RTI	Dwg. No. 200

C.8 Interlock Circuit

Part No.	Description	Manufacturer	Mfg. Part No.
TR1	Transformer (12.6 VAC)	Chicago-Stancor	P8130
S101	Full Open Switch	Robertshaw	1MD1-1A
S102	Full Closed Switch	Robertshaw	1MD1-1A
S103	Door Open Switch	Robertshaw	1MD1-1A
BZ1	Buzzer	Potter & Brumfield	12VDC
B101	Full Open Lamp	Dialco/GE	182-8430/327
B102	Full Closed Lamp	Dialco/GE	182-8430/327

C.9 AC Power

Part No.	Description	Manufacturer	Mfg. Part No.
S1	Power Switch	Arrow Hart	81024GB
F1	Fuse	Littlefuse	3AG-10AMP
PS1	Power Strip	CBC Electronics	MO-G-D

APPENDIX D

SUBSYSTEM MANUALS

The manufacturer-supplied manuals or data sheets on certain major components are included in a separate binder. Reference should be made to these as required for operation, maintenance and repair information. The manuals/data sheets included are as follows:

I. DETECTOR UNIT

A. Photomultiplier (EMI 9558C)
B. HV Power Supply (Power Designs 2K-10)

II. AMPLIFIER AND SIGNAL CONDITIONER

A. Operational Amplifier (AD 183J) or (AD 184J)
B. Operational Amplifier (AD 311)
C. Sample/Hold Modules (BB 4034/25)
D. Multiplier/Divider Modules (BB 4030/25)
E. Operational Amplifier Power Supply (AD 902)
F. DC Power Supply (HP 60155C)

III. TIMING AND CONTROL

A. Programming Switch (Sealectrowsitch SSC-3A)
B. Programming Switch (Sealectroswitch SSC 11)
C. DC Power Supply (Deltron C-12-2.8)

IV. CALIBRATION VMT

A. UV Lamp (Pen-Ray 11SC-1C)
B. Lamp Power Supply (Pen-Ray SCT-1)
C. Lamp Control (Staco 100 BV)

V. PLUMBING ASSEMBLY

A. Teflon Fittings (CHEMPLAST)
B. Metering Valves (Nupro B4MA)
C. Valve Vernier (Nupro)
D. Pump (Neptune 4K)
E. Rotameter (Brooks 1550)
F. Drying Tower (Drierite)
G. Solenoid Valve (Valcor)

VI. CHASSIS AND CABINET ASSEMBLY

A. Exhaust Fan (Rotron Mark 4)

APPENDIX E

ENGINEERING DRAWINGS

A complete set of engineering drawings for the machine shop fabricated parts is included in a separate manual. A listing of the specific drawing sets are given below.

Detector Assembly	Drawing Set # 001
Calibration Assembly	Drawing Set # 100
Pump Mount	Drawing Set # 200
Valve Bracket	Drawing Set # 400
Tower Mount	Drawing Set # 300
Amplifier Chassis	Drawing Set # 500
Main Chassis	Drawing Set # 700
Panels	Drawing Set # 600