United States
Environmental Protection
Agency

Environmental Monitoring
Systems Laboratory
P.O. Box 93478
Las Vegas NV 89193-3478

EPA/600/2-87/082
March 1989

Research and Development

EPA

Two Test Procedures for Radon in Drinking Water

Interlaboratory Collaborative Study

TWO TEST PROCEDURES FOR RADON IN DRINKING WATER
Interlaboratory Collaborative Study

by

E. L. Whittaker
Lockheed Engineering and Management
Services Company, Incorporated
Las Vegas, Nevada 89114

and

J. D. Akridge and J. Giovino
Nuclear Radiation Assessment Division
Environmental Monitoring Systems Laboratory
Las Vegas, Nevada 89114

Contract Number 68-03-3249

Project Officer

Chung-King Liu
Nuclear Radiation Assessment Division
Environmental Monitoring Systems Laboratory
Las Vegas, Nevada 89114

VOCLAT #225026660

ENVIRONMENTAL MONITORING SYSTEMS LABORATORY
OFFICE OF RESEARCH AND DEVELOPMENT
U.S. ENVIRONMENTAL PROTECTION AGENCY
LAS VEGAS, NEVADA 89114

NOTICE

The information in this document has been funded wholly or in part by the United States Environmental Protection Agency under Contract Number 68-03-3249 to the Lockheed Engineering and Management Services Company, Incorporated, Las Vegas, Nevada. It has been subject to the Agency's peer and administrative review, and it has been approved for publication as an EPA document. Mention of trade names or commercial products does not constitute endorsement or recommendation for use.

ABSTRACT

Two analytical methods for the determination of radon in water concentrations were tested in a multilaboratory study with twenty-eight participating laboratories. Eighteen laboratories analyzed prepared samples by the liquid scintillation (LS) method, and twelve laboratories analyzed the same samples by the Lucas Cell (LC) method. Several laboratories analyzed the samples by both methods.

Because of the short half life of radon-222 (3.82 days), special standards and samples were prepared in which each standard and each sample contained its own sealed radium-226 source that emanated radon-222 into the standard and sample water containment. There was a radon hold-back loss factor associated with the standards and samples that were provided to the participant laboratories. However, because the standards and samples were prepared identically, the radon hold-back loss was common to standards and samples alike and therefore did not bias the test results.

A comparison of the grand averages for the three samples with the known values for those samples showed good accuracy for both methods. The accuracy index was not less than 94 percent for any of the three samples when analyzed by either method. The average accuracy for the LS method for the three samples was 95.2 ± 2.0 percent and for the LC method it was 100.7 ± 4.6 percent at the 95 percent confidence level.

Test results for the LS method showed better precision than test results for the LC method. The average repeatability (within-laboratory precision) for the LS method was 3.6 ± 3.0 percent at 95 percent confidence and for the LC method it was 6.4 ± 3.8 percent at 95 percent confidence. The average reproducibility (combined within- and between-laboratory precision) for the LS method was 10.2 ± 4.2 percent at 95 percent confidence and for the LC method it was 17.6 ± 4.2 percent at 95 percent confidence.

The importance of the sampling technique to the analytical accuracy is discussed in the report.

The authors and the Project Officer recommend that the two analytical methods be considered as validated and equivalent methods.

CONTENTS

Abstract. iii
Tables. vi
Abbreviations and Symbols vii
Acknowledgment. ix

Introduction 1
Conclusions 3
Recommendations 5
Experimental Procedures 6
Analytical test procedures 6
Sampling 6
Liquid scintillation method. 6
Lucas Cell method. 7
Collaborative test procedures. 7
Standard and sample solutions 7
General procedures. 7
Data processing procedures 8
Results and Discussion. 11

References. 19

Appendices

A. List of Participant Laboratories 20

B. Analytical Test Procedure "The Determination of Radon in Drinking Water". 22

C. NIRS Sampling Instructions - Radon 26

D. Analytical Test Procedure "Radon/Water Concentration Analysis of Grab Samples Using Lucas Scintillation Cell Detectors" 27

E. Radon Sampling 34

F. Instructions to Participant Laboratories 36

TABLES

Number		Page
1	Liquid Scintillation Method	13
2	Liquid Scintillation Method (Accuracy, Bias and Precision Summary).	14
3	Liquid Scintillation Method (First Aliquot Test Results). . . .	15
4	Liquid Scintillation Method (Test Results of First and Last Aliquots)	16
5	Lucas Cell Method	17
6	Lucas Cell Method (Accuracy, Bias and Precision Summary). . . .	18

LIST OF ABBREVIATIONS AND SYMBOLS

ABBREVIATIONS

ASTM	-- the American Society for Testing and Materials
c/m or cpm	-- counts per minute
cpm/dpm	-- counts per minute per disintegrations per minute
cpm/pCi	-- counts per minute per picocurie
d/m or dpm	-- disintegrations per minute
EMSL	-- Environmental Monitoring Systems Laboratory
EPA	-- Environmental Protection Agency
HB/TL	-- combined hold back/transfer loss
LC	-- Lucas Cell
LS	-- liquid scintillation
mg	-- milligram (0.001 gram)
NIPDWR	-- National Interim Primary Drinking Water Regulations
pCi/L	-- picocuries per liter
pCi/mL	-- picocuries per milliliter
Ra-226	-- radium-226
Rn-222	-- radon-222

SYMBOLS

2S%	-- two sigma percent (two standard deviations in percent)
A_j%	-- the accuracy index for the sample j
n	-- the number of replicate analyses
p	-- the number of participant laboratories in the study
S_{ij}	-- the standard deviation of the replicate test results for sample j by lab i
S_{rj}	-- the repeatability (within-laboratory) standard deviation for sample j
S_{Lj}	-- the standard deviation of between-laboratories precision for sample j
S_{Rj}	-- the reproducibility (combined within- and between-laboratory) standard deviation for sample j
$S_{\bar{X}j}$	-- the standard deviation of the grand average for sample j
V_{rj}%	-- the coefficient of variation for repeatability (within-laboratory) for sample j
V_{Lj}%	-- the coefficient of variation for between-laboratories precision for sample j
V_{R_j}%	-- the coefficient of variation for reproducibility (combined within- and between-laboratory) for sample j
$\bar{X}_j$	-- the grand average value for sample j
Y_j	-- the known value of the sample j concentration (pCi/L)

$\bar{X}_{ij}$ -- the aritnmetic average of all replicate test results of sample j by lab i

X_{ijh} -- the test result of replicate h of sample j by lab i

ACKNOWLEDGMENT

The authors and Project Officer would like to thank all of the participant laboratories for their voluntary effort in this study. They would also like to thank Howard Kelley of EPA EMSL-Las Vegas and Loren Berge, Ph.D. (now with the New Mexico State Health Department) for their assistance in the early experimental and planning stage of the study.

SECTION 1

INTRODUCTION

There has been an increased awareness and a growing concern of the risk of lung cancer because of exposures to radon, a gaseous decay product of naturally occurring radium. The short-lived progeny of radon, two alpha particle emitting and two beta-emitting radioisotopes, are included in that risk concern.

A common source of radon in household air is from the radium in the building materials and the surrounding soil. In areas where there are high concentrations of radon in the water being supplied to houses, the water can be a major source of radon in household air. Any aeration of radon-bearing water in the house, such as showering or washing dishes and clothes, will release a significant fraction of the radon to the air.[1] Therefore, radon in water being supplied to homes is a great concern.

Most homes in the country are being supplied with water from single sources, and those supplies must, therefore, be potable water supplies. Any health hazard associated with potable water supplies is a concern of the EPA Office of Drinking Water, and maximum allowable concentrations for such health hazards need to be addressed in the National Primary Drinking Water Regulations.

Methodology for the measurement of radon concentrations in water needs to be validated. This document is a report of a multilaboratory test of two test procedures for the purpose of validating those test procedures. In one method liquid scintillation counting of the alpha and beta particle emissions from the radon and its short-lived progeny in 10 mL portions of water samples is used to determine radon/water concentrations. In the second method, the radon gas is emanated from measured portions of water samples into preevacuated Lucas cells in which only the alpha particle emissions from the radon and its short-lived progeny are counted to determine radon/water concentrations. A third method is being tested in a separate study, which is an alpha track method, and it will be reported separately.

Radon, a gas that dissolves in water and other solvents, is easily displaced from water by air.[1] The sampling technique is critical to representative sampling and accurate analysis of water supplies that are being monitored for radon/water concentrations. Therefore, the method of analysis to be used should include a sampling technique description.

Radon-222/water concentrations in U.S. ground waters are typically thousands of times higher than the radium-226/water concentrations in the same ground-water supply systems. Radium-226, the progenitor of radon-222, is primarily bound up in the ground-water system acquifers.[2-5] It is, therefore,

desirable to use radium-free, radon/water standards and samples in a multi-laboratory test of analytical methods for determining radon/water concentrations.

A radium-free radon/water generating source was prepared for the EPA, EMSL-Las Vegas, by the National Bureau of Standards.[6] That source/device did not lend itself to the preparation of standards and samples of radon/water that could be used in a multilaboratory test of two methods of analysis. However, the investigator in this study successfully prepared a number of relatively inexpensive radium-226/radon-222 sources that would give repetitive generations of radium-free radon/water concentrations.

This study was conducted by the principal author as an employee of Lockheed Engineering and Management Services Company, Inc., for the EPA under Contract Number 68-03-3249, Task 70.12.

SECTION 2

CONCLUSIONS

A satisfactory multilaboratory test of the two analytical methods was demonstrated by the low number of outlier test results (2 out of 60 laboratory averages for the liquid scintillation method and none for the Lucas Cell method).

Equivalency of the two methods was demonstrated by the high accuracy of the test results obtained by both methods (accuracy index was not less than 94 percent for any of the three samples when analyzed by either method) and by the lack of a serious bias by either method.

A comparison of Table 2 (LS method) with Table 6 (LC method) shows the liquid scintillation (LS) method had better precision than the Lucas Cell (LC) method. The average repeatability (within-laboratory precision) for the LS method was 3.6 ± 3.0 percent at 95 percent confidence, and for the LC method was 6.4 ± 3.8 percent at 95 percent confidence. The average reproducibility (combined within- and between-laboratory precision) for the LS method was 10.2 ± 4.2 percent at 95 percent confidence, and for the LC method was 17.6 ± 4.2 percent at 95 percent confidence.

The type of standards and samples that were used in the multilaboratory study is described in Section 4, Experimental Procedures, Collaborative Test Procedures, Standard and Sample Solutions. That type of standards and samples was used for the following reasons:

a. There was no natural source of high radon/water concentration available to the investigator.

b. Radon-222 has a short half-life (3.82 days), and because most of the participating laboratories are located in the eastern part of the country, a significant transit time was required.

c. The investigator had determined through experimental study that multiple radon generating sources could be prepared that would give repetitive generations of radium-free radon/water standards and samples at very reasonable cost.

d. The use of standards and samples that contained their own radon generating source would make the multilaboratory study much less time-intensive.

There was a combined hold-back/transfer radon loss (HB/TL) associated with the type of standards and samples that were provided to the participants. However, since standards and samples were the same type and were treated in the same way, the hold-back/transfer radon loss was common to standards and samples alike and therefore did not bias the test results.

The variations in the cpm/pCi factors in Table 1 are not reflected by corresponding differences in the sample radon-222 concentration test results. This shows that the differences in the sample aliquot transfer technique used by the laboratories did not significantly affect the test results because standards and samples were transferred by the same technique within each laboratory.

A comparison of the cost per analysis between the two methods favors the LS method significantly when LS counting capability is available to the analyst.

SECTION 3

RECOMMENDATIONS

The authors recommend that the two analytical methods tested in this multilaboratory test be considered valid and equivalent for the determination of radon/water concentrations in potable water systems.

It is recommended that sampling be considered as a critical part of the analytical procedure for analytical methods that are specified for the determination of radon/water concentrations. A positive pressure sampling or transfer technique should be used, and negative pressure techniques, aeration, and turbulence should be avoided whenever possible.

For the LS method, it is recommended that samples be transferred to LS vials directly at the sampling site as described in the EPA method (Appendix B) using a positive pressure technique that is similar to the one described in the NIRS Sampling Instruction-Radon (Appendix C) and that requires filling the LS vial only to the shoulder of the bottle should be used. Pre-weighing the LS vials containing 10 mL of mineral oil cocktail and weighing again after water sample has been added provides for determining sample size. Poly Seal caps on the LS vials seem to retain the mineral oil cocktail better than other caps.

The emanation bubblers for the LC method are both fragile and expensive. Therefore, it is recommended that samples be collected in the field in 4-ounce or larger glass bottles fitted with Poly Seal caps and that the sample bottles be brought or sent to the laboratory for an early LC method analysis. Samples should be collected by a positive pressure sampling technique as described in the Appendix D procedure. An alternative positive pressure sampling technique has been described by the Sanitation and Radiation Laboratory of the California Health Department (Appendix E).

SECTION 4

EXPERIMENTAL PROCEDURES

ANALYTICAL TEST PROCEDURES

Sampling

The sampling technique represented in this study was the collection of water samples in 60-mL bottles capped with Poly Seal caps and shipped to the laboratory for subsequent analysis by liquid scintillation or by the Lucas Cell method. There is a radon loss associated with this sampling technique. For example, when the water sample is held in the 60-mL bottle for 4 days before analysis and then 10-mL aliquots are withdrawn (by a 10-mL Mohr pipette having the tip ground off to a 1/8 inch diameter opening) and are added to liquid scintillation vials containing 10 mL of either a detergent type or mineral oil liquid scintillator cocktail, there is an approximate 15 percent loss of radon. The loss is due to radon dissolving in the Poly Seal cap liner and to the negative pressure aliquot transfer.

The analytical method for radon/water concentrations published by the EPA (7) describes a negative pressure sampling technique. A copy of that method is included in Appendix B. A description of a positive pressure collection of water samples in 60-mL glass bottles for subsequent analysis for radon is given in Appendix C (NIRS Sampling Instructions-Radon).

In this study the sampling consisted of simply transferring measured portions of water from the standard and sample bottles (60 mL) provided to liquid scintillation vials containing liquid scintillator cocktail for analysis by liquid scintillation or to emanation bubblers for the transfer of the radon from the water to Lucas Cells for counting the radon plus progeny alpha activity.

Liquid Scintillation Method

The EPA method calls for transferring 10-mL portions of sample water with a hypodermic syringe and needle, directly from a free-flowing, non-aerating water tap to liquid scintillation vials containing 10-mL of mineral oil scintillator cocktail, Appendix B. The vials are capped immediately with Poly Seal caps, are shaken thoroughly to mix, and are sent back to the laboratory for counting the radon plus progeny alpha and beta activity in a liquid scintillation counter.

Lucas Cell Method

Participants in this study were referred to Method 903.1 in the "Prescribed Procedures for Measurement of Radioactivity in Drinking Water," EPA-600/4-80-032, August 1980, for a description of the apparatus and the emanation steps for the Lucas Cell method of radon/water concentration analysis. A detailed description of that methodology for grab sample analysis of water samples is given in Appendix D.

COLLABORATIVE TEST PROCEDURES

Standard and Sample Solutions

Since most of the ground-water supplies that contain high concentrations of radon show low concentrations of the radium progenitor, it was desirable to provide radium-free radon/water standards and samples to the participants in the multilaboratory test of the two analytical methods. Radon-222 generating sources were prepared by evaporating known quantities of radium-226 in solution on 2.4-cm diameter filter paper discs (Whatman 540 filter paper) and then by sandwiching and sealing the discs in 4 mil thick polyethylene film (Ra-226/Poly sources). The Ra-226/Poly sources were put into 60-mL glass bottles which were then completely filled with deionized water and capped with Poly Seal caps. Radon-222 diffuses through the source poly film and dissolves in the water contained in the bottle. As long as the filter paper disc in the source package appears dry, there should be no radium-226 getting to the water in the bottle. Such Ra-226/Poly sources were prepared for standard and sample waters for the multilaboratory test study. Each standard and sample contained its own Ra-226/Poly source package.

The radon/water standards sent to the participating laboratories contained 825 pCi (some contained 832 pCi) of radium-226 in the Ra-226/Poly sources. Radon/water samples A, B, and C that were sent to the participating laboratories contained 102.6 pCi, 1,036 pCi and 4,205 pCi, respectively, of radium-226. The radon/water concentrations for those samples (A, B, and C) at full radon ingrowth were 1,616 pCi/L, 16,321 pCi/L and 66,246 pCi/L, respectively.

General Procedures

Invitations to participate in the multi-laboratory test of the two analytical methods were sent to 45 laboratories. Forty laboratories agreed to participate in the study. Instructions, standards, and samples were sent to the 40 participating laboratories in November 1986. The laboratories were instructed to report their test results by January 15, 1987. About one-half of the laboratories had submitted their test results by the January 15 date. Therefore, the study was extended to March 1, 1987. About two weeks after the March 1 termination date, a letter was sent to each participating laboratory. The letter contained the known radon-222 concentration values for samples A, B, and C and two tables (one for each method) of the test result averages of the laboratories. The laboratories were not identified in those tables; rather, the data was simply indexed by a number.

DATA PROCESSING PROCEDURES

The data from the participant laboratories were tested for outliers by the ASTM recommended criterion for rejection (ASTM, 1980). When a particular laboratory test result was in question, the T value was calculated by Equation 1.

$$T_1 = (X_1 - \bar{X})/S, \qquad (1)$$

where: T_1 = test criterion

$\bar{X}$ = arithmetic average of all n values
S = the estimate of the population standard deviation based on the sample data.

If the T_1 values exceeded the critical values, the measurement in question was rejected. Critical values of T for a 5 percent, two-sided level of significance were used for the rejection criterion.

A statistical evaluation of the test results was carried out by the procedures described in E-691, E-177, and E-178 of the ASTM Standard Part 41, 1980. The standard deviations and other statistical parameters and equations for their calculations are listed below. The standard deviation of individual participant (or laboratory) test results, S_{ij}, was determined by Equation 2.

$$S_{ij} = \left[\sum_{h=1}^{n_{ij}} (X_{ijh} - \bar{X}_{ij})^2/(n_{ij} - 1) \right]^{1/2} \qquad (2)$$

where: X_{ijh} = the result reported for the h replicate of the j sample material by lab i
$\bar{X}_{ij}$ = the mean of the individual results for sample j for lab i
n_{ij} = the number of replicates reported for sample j by lab i.

The repeatability (within-laboratory standard deviation), S_{r_j}, for each sample was determined by Equation 3 or 3A.

Where the number of replicates was the same (three) for all participants, Equation 3 was used.

$$S_{r_j} = \left(1/P \sum_{i=1}^{P} S_{ij}^2 \right)^{1/2} \qquad (3)$$

where: P = the number of participants in the study.

Where the number of replicates was not the same for all participants, Equation 3A was used.

$$S_{r_j} = \left[\frac{\sum_{i=1}^{P} [(n_{ij} - 1)\, S_{ij}^{2}]}{\sum_{i=1}^{P} (n_{ij} - 1)} \right]^{1/2} \tag{3A}$$

The standard deviation of the grand average for each sample, $S_{\bar{X}_j}$, was determined by Equation 4.

$$S_{\bar{X}_j} = \left[\sum_{i=1}^{P} (\bar{X}_{ij} - \bar{X}_j)^2/(P-1) \right]^{1/2} \tag{4}$$

where: $\bar{X}_{ij}$ = the average of the test results for sample material j by lab i

$\bar{X}_j$ = the grand average for sample material j.

The standard deviation of between-laboratory precision for each sample material, S_{L_j}, was determined by Equation 5.

$$S_{L_j} = \left(S_{\bar{X}_j}^{2} - \frac{S_{r_j}^{2}}{n} \right)^{1/2} \tag{5}$$

The reproducibility (combined within- and between-laboratory standard deviation) for each sample, S_{R_j}, was determined by Equation 6.

$$S_{R_j} = \left(S_{r_j}^{2} + S_{L_j}^{2} \right)^{1/2} \tag{6}$$

The coefficient of variation for repeatability (within-laboratory) for each sample, $V_{r_j}\%$, was determined by Equation 7.

$$V_{r_j}\% = 100\, S_{r_j} / \bar{x}_j \tag{7}$$

The coefficient of variation for between-laboratory precision for each sample, $V_{L_j}\%$, was determined by Equation 8.

$$V_{L_j}\% = 100\, S_{L_j} / \bar{x}_j \tag{8}$$

The coefficient of variation for reproducibility (combined within- and between-laboratory) for each sample, $V_{R_j}\%$, was determined by Equation 9.

$$V_{R_j}\% = 100\ S_{R_j} / \bar{x}_j \tag{9}$$

The accuracy index, $A_j\%$, a percent relationship of the grand average, $\bar{X}_j$, to the known value, Y_j, for each sample material, was determined by Equation 10.

$$A_j\% = 100\ \frac{\bar{X}_j}{Y_j} \tag{10}$$

Bias, the difference between the known value and the measured mean value, was determined by Equation 11.

$$\text{Bias} = \bar{X}_j - Y \tag{11}$$

where: Y = the known value.

Percent Bias was determined by Equation 12.

$$\%\ \text{Bias} = \frac{\bar{X}_j - Y}{Y} \times 100 \tag{12}$$

A comparison of the grand average value, X_j, with the known value, Y_j, for each sample in a significant difference test was determined by Equation 13 (Youden and Steiner, 1975).

$$t_j = \frac{\bar{X}_j - Y_j}{S_{\bar{x}_j}/(P)^{1/2}},\ (P-1) \text{ degrees of freedom} \tag{13}$$

where: P = number of participants

Y_j = known value of the sample j contaminant concentration

t_c = critical value for the number of participants; values for t_j greater than t_c are significantly different and show a systematic error. A table of critical values is given in the above reference.

SECTION 5

RESULTS AND DISCUSSION

Table 1 lists the test result averages, individual laboratory standard deviations from replicate analyses, the number of replicates averaged, and the factor (cpm/pCi) for converting counts per minute to picocuries of radon-222, for the liquid scintillation (LS) method. Only two laboratory average outliers were found in those test results (both for Sample B). Laboratory 21 analyzed the samples two times by the LS method, once by using the mineral oil liquid scintillator cocktail and once by using a detergent-type liquid scintillator cocktail (data included in Table 1).

Table 2 is a statistical summary of the accuracy, bias, and precision of the Table 1 test results, as calculated by the equations given in the Section 4, Data Processing Procedures. A comparison of known values for Samples A, B, and C with the grand averages of the test results for those samples shows accuracy indexes of 94.0 percent, 96.5 percent, and 95.0 percent, respectively, for an average accuracy index of 95.2 percent ± 2.0 percent (95 percent confidence). The 95.2 percent accuracy index corresponds to a negative bias of 4.8 ± 2.0 percent (95 percent confidence). The 4.8 ± 2.0 percent negative bias is a significant (real) bias as indicated by the T values for the samples being greater than the critical values for T. However, that bias is not a serious bias and is likely due to a loss of radon activity in the transfer of successive aliquots from the same sample bottle water for replicate analyses (compare Table 1 test result averages with Table 3 first aliquot test results).

Table 2 shows that the estimated (20 participant average) repeatability (within-laboratory precision) of the liquid scintillation method for the determination of radon-222/water concentrations at the 1,600 pCi/L level (Sample A) is 87 pCi/L (5.7 percent); at the 16,000 pCi/L level (Sample B) is 385 pCi/L (2.5 percent); and at the 66,000 pCi/L level (Sample C) is 1,630 pCi/L (2.6 percent), for an average repeatability (index precision) of 3.6 ± 3.0 percent at 95 percent confidence.

Table 2 shows the estimated (20 participant average) reproducibility (combined within- and between-laboratory) precision of the liquid scintillation method for the determination of radon-222/water concentrations at the 1,600 pCi/L level (Sample A) is 189 pCi/L (12.4 percent); at the 16,000 pCi/L level (Sample B) is 1,159 pCi/L (7.4 percent); and at the 66,000 pCi/L level (Sample C) is 6,839 pCi/L (10.9 percent), for an average reproducibility (index precision) of 10.2 ± 4.2 percent at 95 percent confidence.

Table 3 was prepared to show that the first aliquot analysis is generally higher in radon/water concentration than the averages of the replicate analyses

of aliquots taken from the same sample bottle water. The T tests to show significant difference applied to the Table 3 test results for Samples A, B, and C show that the Sample A, B, and C grand averages are not significantly different from the respective sample known values (T values for the samples are less than the critical values).

Tables 4a and 4b were prepared to show differences between first and last aliquot analyses for the replicate analyses of some of the laboratories where it was obvious that they took successive aliquots from the same standard and sample water (one-time generations in the 60-mL bottles provided). Some laboratories regenerated standards and samples in their analysis of the samples.

Table 5 lists the laboratory test result averages, their standard deviations from replicate analyses, the number of replicates averaged, and the factor (cpm/pCi) for converting counts per minute to picocuries of radon-222, for the Lucas Cell (LC) method. No outliers were found in the Table 5 test result averages.

Table 6 is a statistical summary of the accuracy, bias, and precision of the Table 5 test results, as calculated by the equations given in the Section 4, Data Processing Procedures. A comparison of the known values for Samples A, B, and C with the respective grand averages of the Table 5 test results shows accuracy indexes of 101.9 percent, 102.7 percent, and 97.4 percent, respectively, for an average accuracy index of 100.7 ± 4.6 percent at 95 percent confidence. The bias values of +1.9 percent, +2.7 percent, and -2.6 percent for Samples A, B, and C, respectively, are within the 95 percent confidence limits of the average accuracy index. The T tests to show significant difference applied to known values and grand averages for the samples show that there are no significant differences (T values for the samples are less than the critical value).

Table 6 shows that the estimated (12 laboratory average) repeatability (within-laboratory precision) of the Lucas Cell method for the determination of radon-222/water concentrations at the 1,600 pCi/L level (Sample A) is 94 pCi/L (5.7 percent); at the 16,000 pCi/L level (Sample B) is 776 pCi/L (4.6 percent); and at the 66,000 pCi/L level (Sample C) is 5,792 pCi/L (9.0 percent), for an average repeatability (index precision) of 6.4 ± 3.8 percent at 95 percent confidence.

Table 6 shows that the estimated (12 participant average) reproducibility (combined within- and between-laboratory precision) of the Lucas Cell method for the determination of radon-222/water concentrations at the 1,600 pCi/L level (Sample A) is 276 pCi/L (16.8 percent); at the 16,000 pCi/L level (Sample B) is 2,592 pCi/L (15.5 percent); and at the 66,000 pCi/L level (Sample C) is 13,200 pCi/L (20.5 percent), for an average reproducibility (index precision) of 17.6 ± 4.2 percent at 95 percent confidence.

TABLE 1. LIQUID SCINTILLATION METHOD

Laboratory	Factor cpm/pCi ± S	Radon-222 pCi/1,000 g ± S			Replicates (n)
		Sample A	Sample B	Sample C	
1	8.88 ± 0.00	1,571 ± 31	16,308 ± 46	67,076 ± 30	2
2	8.25 ± 0.23	1,570 ± 31	16,065 ± 235	65,797 ± 1,160	6
3	7.26 ± 0.19	1,599 ± 75	15,404 ± 293	58,934 ± 750	4
4	8.45 ± 9.05	1,568 ± 8	16,270 ± 33	51,916 ± 130	2
6	8.13 ± 0.34	1,283 ± 82	16,966 ± 419	67,666 ± 1,014	3
7	7.50 ± 0.23	1,656 ± 62	16,734 ± 237	68,432 ± 1,416	5
10	8.59 ± 0.06	1,501 ± 11	14,943 ± 1,112	61,020 ± 660	2
11	7.51 ± 0.45	1,358 ± 78	(10,387 ± 646)[b]	68,366 ± 309	3
13	6.75 ± 0.08	1,671 ± 33	16,916 ± 174	55,733 ± 1,878	3
15[a]	7.70 ± 0.17	1,604 ± 152	16,548 ± 487	48,940 ± 2,543	6
17	8.30 ± 0.49	1,280 ± 20	17,060 ± 110	52,050 ± 1,140	2
18	8.40 ± 0.08	1,629 ± 18	15,158 ± 166	65,862 ± 295	3
18	8.12 ± 0.37	1,568 ± 97	14,722 ± 581	63,341 ± 3,220	6
20	8.08 ± 0.10	1,828 ± 33	12,968 ± 362	76,640 ± 132	3
21	8.19 ± 0.05	1,614 ± 22	16,660 ± 157	69,427 ± 250	3
21[a]	9.12 ± 0.09	1,567 ± 28	15,300 ± 229	60,920 ± 627	3
23	6.82 ± 0.003	1,556 ± 30	15,281 ± 256	65,375 ± 1,039	2
26	9.00 ± 0.09	1,553 ± 31	15,920 ± 360	66,560 ± 625	3
27	3.64	1,290	14,200	60,700	1
27	3.34 ± 0.47	1,117 ± 309	(9,804 ± 5,665)[b]	66,141 ± 1,380	2
$\bar{X} \pm S_{\bar{X}}$		1,520 ± 170	15,800 ± 1,100	62,900 ± 6,600	
Known Value (Y)		1,620 ± 49	16,300 ± 501.	66,200 ± 2,030	

[a]Detergent liquid scintillator was used instead of mineral oil liquid scintillator.
[b]Outlier not used in the grand average.

TABLE 2. LIQUID SCINTILLATION METHOD
(Accuracy, Bias, and Precision Summary)

Parameter[a]	Sample A	Sample B	Sample C	Average % Values ± S
Y_j (pCi/L)	1620 ± 49	16,300 ± 501	66,200 ± 2,034	
$\overline{X}_j$ (pCi/L)	1520	15,700	62,900	
A_j (%)	94.0	96.5	95.0	95.2 ± 1.0
Bias (%)[b]	-6.0	-3.5	-5.0	-4.8 ± 1.0
$S_{\overline{X}j}$ (pCi/L)	169	1,100	6,650	
S_{rj} (pCi/L)	87	385	1,630	
S_{Lj} (pCi/L)	168	1,090	6,640	
S_{Rj} (pCi/L)	190	1,200	6,840	
V_{rj} (%)	5.7	2.5	2.6	3.6 ± 1.5
V_{Lj} (%)	11.1	7.0	10.5	9.5 ± 1.9
V_{Rj} (%)	12.4	7.4	10.9	10.2 ± 2.1
T_j-1[c]	2.56	2.22	2.22	
T_j-3	1.44	0.35	2.01	

[a]Parameters are described in the text.
[b]The sign before the number indicates the direction of bias.
[c]The critical value (t_c) for significant difference at the 5 percent significance level for 18 labs (Sample B) is 2.105 and for 20 labs (Samples A and C) is 2.090.
T_j-1 values are calculated from Table 1 test results.
T_j-3 values are calculated from Table 3 test results.

TABLE 3. LIQUID SCINTILLATION METHOD
(First Aliquot Test Results)

Laboratory	Factor cpm/pCi	Radon pCi/1,000 g ± S		
		Sample A	Sample B	Sample C
1	8.88	1,540	16,354	67,106
2	8.46	1,601	16,146	66,073
3	7.46	1,719	15,768	59,911
4	8.40	1,560	16,237	52,046
6	8.30	1,360	17,400	69,100
7	7.68	1,618	16,473	67,839
10	8.66	1,513	16,055	61,680
11	8.02	1,450	(9,930)[a]	68,100
13	6.84	1,686	16,798	58,271
15	7.80	1,746	16,985	51,884
17	8.68	1,260	16,950	53,190
18	8.46	1,604	15,309	66,102
20	8.21	1,873	13,459	74,670
21	8.25	1,630	16,854	69,605
21	9.25	1,582	15,616	61,783
23	6.82	1,586	15,025	64,336
26	9.11	1,553	15,920	66,910
27	3.64	1,290	14,200	60,700
$\bar{X}$		1,560	16,000	63,300
$S_{\bar{X}}$		150	998	6,227.
Y		1,620 ± 49	16,300 ± 501	66,200 ± 2030
T		1.44	0.35	2.01

[a]Outlier not used in the grand average.

TABLE 4a. LIQUID SCINTILLATION METHOD
(Test Results of First and Last Aliquots)

Laboratory	Replicate Analyses	First and Last Aliquot Analysis: Standard cpm/pCi First	Standard cpm/pCi Last	Sample A Radon pCi/1,000 g First	Sample A Radon pCi/1,000 g Last
2	6	8.46	7.95	1,601	1,538
3	4	7.46	6.95	1,719	1,608
6	3	8.43	7.65	1,360	1,170
15	6	7.80	7.40	1,746	1,462
18	6	8.46	7.41	1,604	1,392
21	6	8.25	7.52	1,629	1,414
21[a]	6	9.25	7.95	1,582	985

[a]Detergent type liquid scintillator cocktail was used; all others used mineral oil liquid scintillator cocktail.

TABLE 4b. LIQUID SCINTILLATION METHOD
(Test Results of First and Last Aliquots)

Laboratory	Replicate Analyses	First and Last Aliquot Analysis: Sample B Radon p/Ci/1,000 g First	Sample B Radon p/Ci/1,000 g Last	Sample C Radon pCi/1,000 g First	Sample C Radon pCi/1,000 g Last
2	6	16,146	15,708	66,073	63,837
3	4	15,769	15,102	59,911	58,501
6	3	17,400	16,400	69,100	66,900
15	6	16,986	15,728	51,884	45,012
18	6	15,309	13,602	66,102	56,850
21	6	16,854	14,668	69,605	63,410
21[a]	6	15,616	12,517	61,783	53,314

[a]Detergent type liquid scintillator cocktail was used; all others used mineral oil liquid scintillator cocktail.

TABLE 5. LUCAS CELL METHOD

Laboratory	Factor cpm/pCi ± S	Radon-222 pCi/1,000 g ± S Sample A	Sample B	Sample C	Replicates (n)
5	3.79 ± .08	1,838 ± 96	17,450 ± 815	72,280 ± 12,418	5
8	4.24 ± .04	1,608 ± 26	14,514 ± 72	45,730 ± 392	2
12		1,552	17,550	60,780	1
14	2.50 ± .04	1,702 ± 93	16,493 ± 1,452	73,921 ± 2,604	3
16	4.78 ± .13	1,510 ± 84	16,746 ± 935	65,854 ± 2,510	6
17	4.89 ± .04	1,495 ± 265	16,950 ± 300	49,200 ± 520	2
19	4.67 ± .21	1,636 ± 60	16,680 ± 827	67,756 ± 2,459	6
21	4.66 ± .15	1,586 ± 68	16,466 ± 277	66,197 ± 1,445	3
22			13,537 ± 379		5
24	4.57 ± .24	2,059 ± 81	19,600 ± 580	79,670 ± 5,752	5
25	1.53 ± .13	1,550 ± 85	19,257 ± 792	77,900 ± 2,339	2
28	0.1053	2,100 ± 200	21,000 ± 2,000	70,000 ± 7,000	1
$\bar{X}$		1,650	16,800	64,500	
$S_{\bar{X}}$		261	2,480	12,000	
Known Value (Y)		1,620 ± 49	16,300 ± 501	66,200 ± 2,030	

TABLE 6. LUCAS CELL METHOD
(Accuracy, Bias, and Precision Summary)

Parameter[a]	Sample A	Sample B	Sample C	Average % Values ± S
Y_j (pCi/L)	1,620 ± 49	16,300 ± 501	66,200 ± 2,030	
$\bar{X}_j$ (pCi/L)	1,650	16,800	64,500	
A_j (%)	101.9	102.7	97.4	100.7 ± 2.3
Bias (%)[b]	+1.9	+2.7	-2.6	
$S_{\bar{X}j}$ (pCi/L)	261	2,480	12,000	
S_{rj} (pCi/L)	94	776	5,790	
S_{Lj} (pCi/L)	259	2,470	11,900	
S_{Rj} (pCi/L)	276	2,590	13,200	
V_{rj} (%)	5.7	4.6	9.0	6.4 ± 1.9
V_{Lj} (%)	15.7	14.8	18.4	16.3 ± 1.5
V_{Rj} (%)	16.8	15.5	20.5	17.6 ± 2.1
T_j[c]	0.411	0.624	0.498	

[a]Parameters are described in the text.
[b]The sign before the number indicates the direction of bias.
[c]The critical value (T_c) for significant difference at the 5 percent significance level for 12 labs (Sample B) is 2.18 and for 11 labs (Samples A and C) is 2.20.

REFERENCES

1. Patridge, J. E., T. R. Horton, and E. L. Sensintaffar, A Study of Radon-222 Released from Water During Typical Household Activities, ORP/EERF-79-1 March 1979, Eastern Environmental Radiation Facility, Montgomery, Alabama.

2. Smith, B. M., W. N. Grane, F. B. Higgins, Jr., and J. G. Terrill, Jr., Natural Radioactivity in Ground Water Supplies in Maine and New Hampshire. Journal American Water Works Association, Vol. 53, No. 1 January 1961, pp. 75-88.

3. Aldrich, L. K., III, M. K. Sasser, and D. A. Conners, IV, Evaluation of Radon Concentrations in North Carolina Ground Water Supplies, Dept. of Human Resources, Division of Facility Services, Radiation Protection Branch, Raleigh, North Carolina, January 1975.

4. O'Connell, M. F., and R. F. Kaufman, Radioactivity Associated with Geothermal Waters in the Western United States, U.S. Environmental Protection Agency Technical Note, ORP/LV-75-8A, March 1976.

5. Duncan, D. L., T. F. Gesell, and R. H. Johnson, Jr., Radon-222 in Potable Water, Proceedings of the Health Physics Society 10th Midyear Topical Symposium: Natural Radioactivity in Man's Environment, October 1976.

6. Hutchinson, J.M.R., R. A. Mullen and R. Collé, Development of a Regenerative Radon-In-Water Radioactivity Standard, National Bureau of Standards, Washington, D.C., USA.

7. EPA/EERF - Manual-78-1 Radon in Water Sampling Program.

APPENDIX A

PARTICIPANT LABORATORIES

(NOT LISTED IN ORDER OF TABLE LABORATORY NUMBERING)

North Carolina State Laboratory
of Public Health
Department of Human Resources
Raleigh, North Carolina

Air-N-Sol Corporation
Frenchtown, New Jersey

State of Connecticut Health
Laboratory
Hartford, Connecticut

Atlantic Environmental Laboratory
West Haven, Connecticut

New Hampshire Water Supply and
Pollution Control Commission
Concord, New Hampshire

Kentucky Radiation Control
Branch Laboratory
Commonwealth of Kentucky
Frankfort, Kentucky

Environmental Laboratories, Inc.
Gulfport, Mississippi

USAF Occupational and Environmental
Health Laboratory
Brooks Air Force Base, Texas

USGS - Gulf Coast Hydroscience Center
National Space Technology
Laboratories
NSTL, Mississippi

Argonne National Laboratory
Argonne, Illinois

U.S. Environmental Protection Agency
Environmental Montoring Systems
Laboratory
Cincinnati, Ohio

State of California
Department of Health Services
Berkeley, California

U.S. EPA Eastern Environmental
Radiation Facility
Montgomery, Alabama

Texas Department of Health
Austin, Texas

Clean Harbors, Inc.
Braintree, Massachusetts

Radiological Hygiene Laboratory
Department of Environmental Science
and Engineering
University of North Carolina
Chapel Hill, North Carolina

U.S. EPA - Region VIII
Denver Federal Bldg.
Denver, Colorado

Maine Public Health Laboratory
Station 12
Augusta, Maine

Oak Ridge Associated Universities - RSAP
Oak Ridge, Tennessee

Wisconsin State Laboratory of Hygiene
Madison, Wisconsin

Thermo Analytical Inc. - EAL
Richmond, California

New York State Department of Health
Radiological Sciences Laboratory
Albany, New York

Kutzman University
Department of Physical Sciences
Kutztown, Pennsylvania

Teledyne Isotopes
Westwood, New Jersey

Kansas Department of Health and Environment
Radiation Laboratory
Topeka, Kansas

University of Maine
Department of Physics
Orono, Maine

New Jersey Department of Environmental Protection
Bureau of Environmental Laboratories
Trenton, New Jersey

Radiation Surveys, Inc.
Wayne, New Jersey

Colorado State University
Department of Radiology and Radiation Biology
Fort Collins, Colorado

APPENDIX B

ANALYTICAL TEST PROCEDURE "THE DETERMINATION OF RADON IN DRINKING WATER"

(EPA EASTERN ENVIRONMENTAL
RESEARCH FACILITY, MONTGOMERY, ALABAMA)

THE DETERMINATION OF RADON IN DRINKING WATER

There are several published methods for the determination of radon (Rn-222). Those include de-emanation into a scintillation flask or Lucas Cell, gamma spectrometry, high volume extraction followed by liquid scintillation counting, and direct low-volume liquid scintillation counting.

Of the aforementioned methods, the last one is probably the most rapid and simplest while other methods may exhibit higher sensitivity. Good precision and accuracy have been shown for samples having radon concentrations of several hundred pCi/L or greater using direct, low-volume liquid scintillation counting. It is especially suited for large numbers of samples over a short period of time. For reasons previously stated, direct low volume scintillation counting is the recommended procedure for determining radon in drinking water, since high sensitivity (e.g., 1 pCi/L or less) is not necessary.

Principle

Samples are collected using the sampling procedure described in EPA/EERF-MANUAL-78-1. Samples are counted by liquid scintillation counting and radon concentration is computed from total count rate due to alpha and beta decay.

Special Apparatus

1. Sampling kit which includes a sampling funnel and tube with standard faucet fitting, two 12 mL disposable syringes with 20 gauge 1-1/2 inch hypodermic needles, and glass scintillation vials with 10 mL of liquid scintillation mix. See Note 1.
2. Optional mailing tubes.
3. Liquid scintillation counter, ambient temperature, with automatic sample changer.

Reagents

1. Mineral oil based liquid scintillation mix PSS-007H or equivalent, if mailing via regular mail. Otherwise, a toluene based liquid scintillation mix is acceptable. See Note 2.
2. Distilled water.
3. A traceable National Bureau of Standards (NBS) radium-226 standard solution.

Procedure

1. Attach the sampling funnel and tube to a faucet with the standard faucet fitting.
2. Slowly turn on the water and allow a steady stream to flow out of the funnel for approximately 2 minutes. This purges the tube and assures a fresh sample.
3. Reduce the flow of water and invert the funnel. The flow should be adjusted to a level that does not cause turbulence in the pool of water contained in the funnel. Allow excess water to spill over one edge of the funnel.
4. Examine the hose connection and tubing for air bubbles or pockets. If these are visible, raise or lower the funnel until they are removed.
5. Place the tip of the hypodermic needle approximately 3 cm under the surface of the water in the funnel and withdraw a few mL of water and eject this water. Using this procedure, rinse the syringe and hypodermic needle two or three more times.
6. Again, place the tip of the needle approximately 3 cm below the surface of the water and withdraw approximately 12 mL.

   NOTE: The water should be pulled into the syringe slowly to avoid extreme turbulence and collection of air bubbles. If large air bubbles are noticed in the syringe, the sample should be ejected and redrawn.

7. Invert the syringe and slowly eject any small air bubbles and extra water. Retain precisely 10 mL of water in the syringe.
8. Remove the cap from a vial and carefully place the tip of the needle into the bottom of the liquid scintillation solution. Slowly eject the water from the syringe into the vial.

   NOTE: The water is injected under the liquid scintillation solution to prevent loss of radon from the sample. If the water is forced out of the syringe with much pressure, it will cause turbulence in the solution and could result in loss of radon.

9. Carefully withdraw the hypodermic needle from the vial and replace the cap. The cap should be tightly secured to prevent leakage.
10. Repeat the previous steps to obtain two separate samples from each source. This completes the sample collection.

11. If the vials are to be mailed, the two samples from each source should be individually wrapped with packing material such as newspaper or paper toweling, placed in the mailing tube, and mailed as soon as possible. Due to the short half-life of radon (3.82 days), the quick return of the samples for analysis is of primary importance.

Counting Procedure

1. Scintillation vials are cleaned with alcohol and shaken while allowing 3 hours before counting.
2. A background sample, consisting of 10 mL of distilled water and 10 mL of scintillation solution, and a standard radium-226 solution sample are counted for 50 minutes at the beginning of counting and after every 10 drinking water samples. Drinking water samples are also counted for 50 minutes.
3. An optional second counting of samples is desirable.

Preparation of Standard

1. Add a known quantity of traceable NBS radium-226 standard solution to a known volume of distilled water.
2. Combine a 10 mL aliquot of the radium-226 standard solution with 10 mL of scintillation mix in a 20 mL glass scintillation vial.
3. Allow approximately 21 days for buildup of radon (i.e., secular equilibrium with radium-226).
4. Shake vial to transfer nearly all the radon to the scintillation mix phase (radon is highly soluble in the scintillation mix). The radium-226 remains in the aqueous phase and, therefore, does not contribute significantly to the count rate.
5. Allow the buildup of the radon short-lived progeny by waiting 3 hours before counting.
6. Count the standard and background samples for 50 minutes or longer.
7. Subtract the background counts per minute (cpm) from the gross cpm for the standard and divide by the known radon activity (i.e., radon activity equals radium-226 activity at secular equilibrium) to obtain the cpm/pCi conversion factor.

Calculations

Calculate the picocuries per liter of radon in the sample by using the following equation:

$$A = \frac{(C_S - C_B)\ (1000\ \text{mL})}{(CF)\ (D)\ (10\ \text{mL})\ (1\ \text{liter})}$$

where: A = picocuries of radon per liter of, sample
C_S = sample cpm
C_B = background cpm
CF = cpm/pCi conversion factor
D = Decay correction.

Decay Correction:

$$\text{Decay correction (D)} = e^{-\frac{0.693(T)}{t_{1/2}}}$$

T = Time in days from collection time to midpoint of counting time.

$t_{1/2}$ = Radiological half-life of radon, 3.82 days.

Notes

1. Liquid scintillation vials are standard 20 mL capacity. White caps having polyethylene inner seals are used.
2. PSS-007H is available from Pilot Chemicals Division, New England Nuclear, Watertown, MA 02172. Do not use a scintillation mix containing emulsifier.

References

1. Homma, Y. and Murakami, Y., 1977, J. Radioanalyt. Chem. 36, 177.
2. Horton, T. R., 1983, "Methods and Results of EPA's Study of Radon in Drinking Water," EPA 520/5-83-027.
3. Lucas, H. F., 1957, "Improved Low-Level Alpha-Scintillation Counter for Radon," Rev. Sci. Inst. 28, 680.
4. Lucas, H. F., 1964, "A Fast and Accurate Survey Technique for Both Radon-222 and Radium-226," in The Natural Radiation Environment, U. of Chicago Press, 315.
5. Noguchi, M., 1964, Radioisotopes 13, 362 (in Japanese).
6. Prichard, H. M. and Gesell, T. F., 1977, "Rapid Measurements of Rn-222 Concentrations in Water with a Commercial Liquid Scintillation Counter," Health Phys. 33, 577.
7. U.S. Environmental Protection Agency, 1978, "Radon in Water Sampling Program," EPA/EERF-MANUAL-78-1.

APPENDIX C

NIRS SAMPLING INSTRUCTIONS - RADON

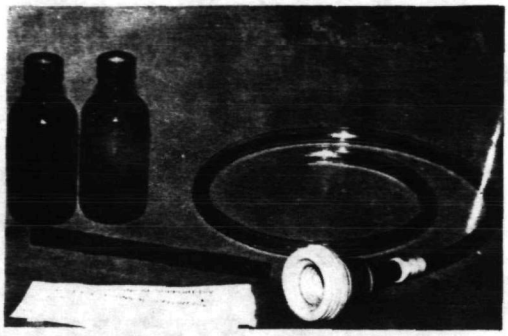

1. **Radon** sampling equipment – 60 mL amber bottles, Teflon septa, caps, universal faucet connector with Tygon tubing, and labels.

2. Fill out label with special pen (enclosed) and attach to bottle before sampling.

3. Attach tubing to faucet and allow water to run for 3 min., then adjust for slow flow.

4. Remove cap with septum in place and insert tube to bottom of bottle.

5. Slowly fill bottle to top while keeping end of tube submerged.

6. Slowly remove tube allowing a *miniscus to form.*

7. Replace the cap with the Teflon septum (shiny side) in contact with the water sample.

8. Screw cap on tightly, invert and tap side to check for bubbles. If found, repeat steps 4 thru 8.

APPENDIX D

ANALYTICAL TEST PROCEDURE "RADON/WATER CONCENTRATION ANALYSIS OF GRAB SAMPLES USING LUCAS SCINTILLATION CELL DETECTORS"

SAMPLE COLLECTION

Since the radon emanation bubblers (Figure 2) are both fragile and expensive, instead of collecting samples directly in the bubblers it is recommended that grab samples be collected in glass bottles and brought to the laboratory for early analysis using the Figure 1 apparatus.

Sampling Procedure

1. The water faucet from which grab samples are to be taken should be a non-aerating faucet. Remove the aerating attachment if one is attached and can be removed.

2. Attach a universal faucet hose attachment that has been provided with approximately two feet of Tygon tubing (1/4 inch inside diameter and 1/16 inch wall thickness).

3. Open the faucet to a fast flow (not splashing) and allow water to flow for 3 minutes.

4. Stop the water flow only long enough to place the outlet end of the Tygon tubing at the inside bottom of a sample bottle. Turn the water on carefully and with minimal turbulence fill the bottle completely, withdrawing the Tygon tubing and keeping the outlet end of the tubing below the surface of the water as the bottle fills. Turn off the water and cap the bottle immediately.

5. Label the bottle to show location of sampling, the date and time of day and the sample number.

6. If more than one sample is to be taken, open the faucet and allow fast flow for 1 minute. Then repeat Step 4 with a separate sample bottle.

7. Send the sample bottles to the laboratory for early radon/water concentration analyses.

MATERIALS NEEDED

1. Sample bottles (see Note 2)

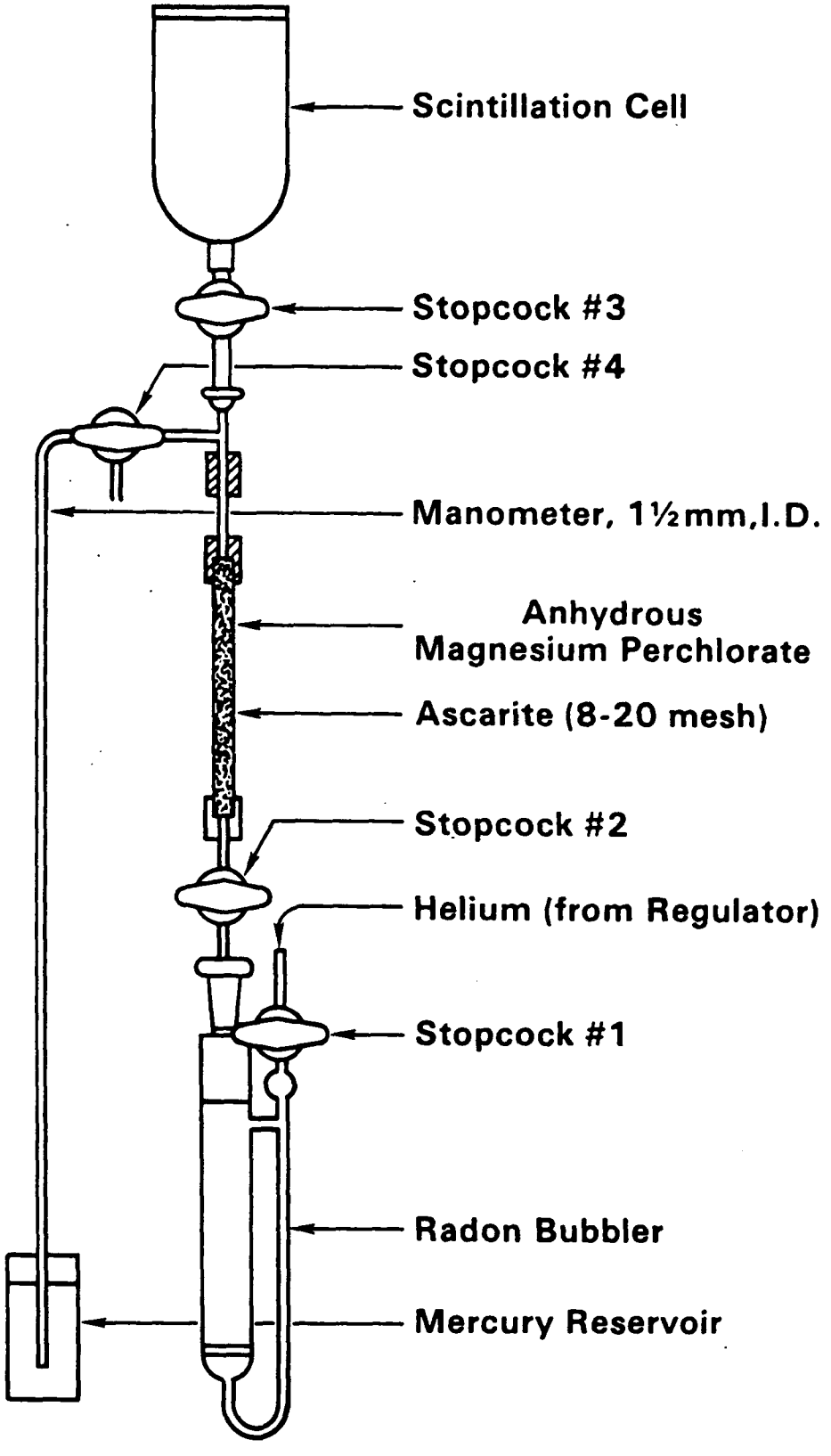

Figure 1. Radon emanation apparatus with scintillation cell.

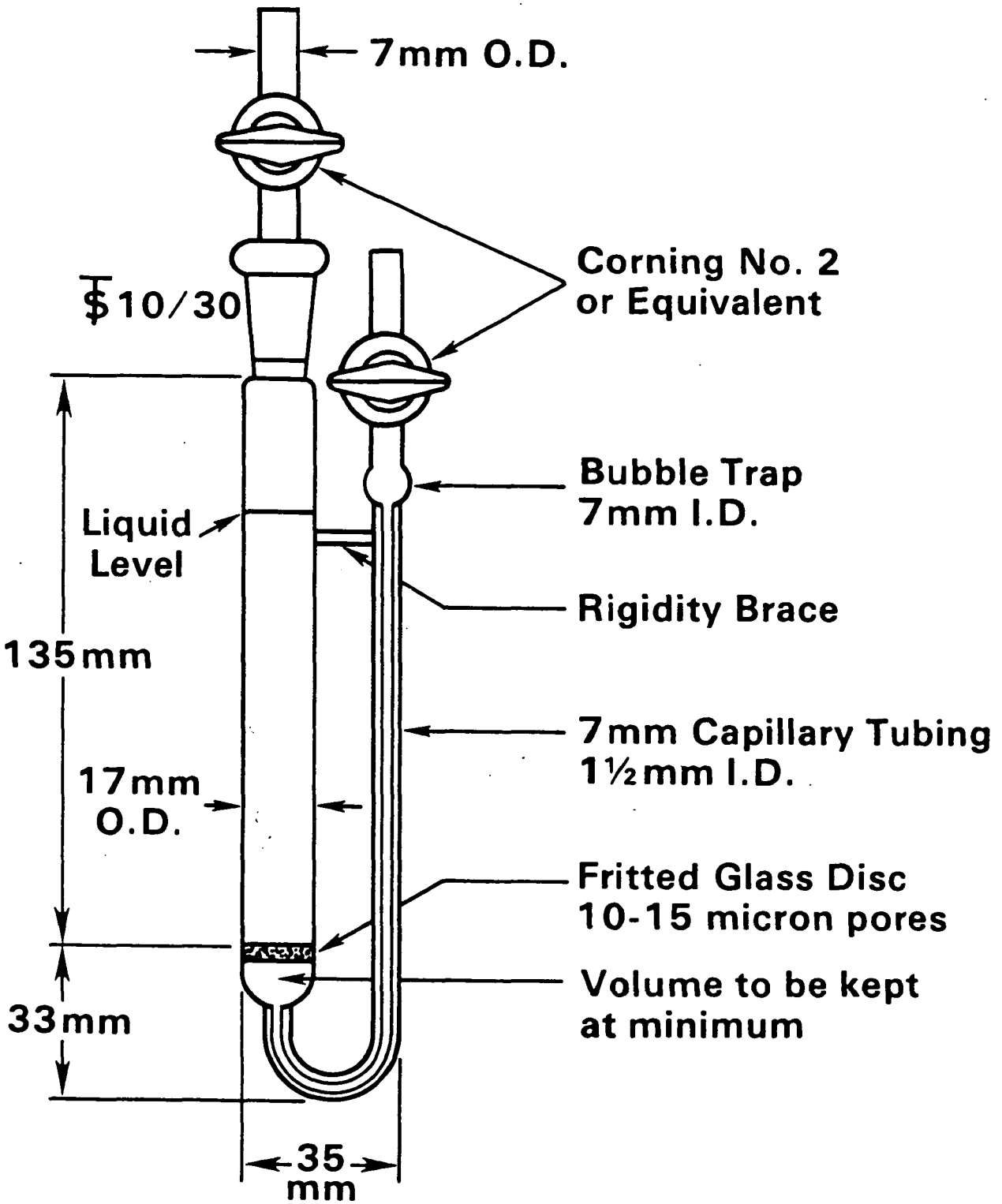

Figure 2. A typical radon bubbler.

2. Universal faucet/hose attachment, provided with approximately 2 feet of Tygon tubing (1/4 inch inside diameter and 1/16 inch wall thickness).

3. Figure 1 apparatus components

4. At least 10 Lucas scintillation cell detectors

5. At least 10 radon gas bubblers

6. Vacuum pump

7. Lucas scintillation cell counting instrument that will accept the Lucas cells in a light-free placement

8. Compressed helium or aged air cylinder with a two-stage pressure regulator, a shutoff valve, and a hose bib attached.

   For a 14 mL/minute He gas flow, attach a 10-inch length of thermometer capillary tubing to the hose bib of the regulator and a length of 1/4 inch diameter Tygon tube from the capillary tube outlet to the radon bubbler inlet. Adjust the regulator pressure to 10 psi.

CALIBRATION OF LUCAS CELLS

1. Each Lucas Cell should be checked for background alpha activity before it is used for standards or samples.

   a. Attach the Lucas cell to the emanation system.

   b. Put a clean and dry bubbler in the system.

   c. Evacuate the system including the Lucas cell.

   d. Charge the system with He gas to atmospheric pressure.

   e. Repeat the evacuation and He charging two more times, finally leaving the cell charged with He to atmospheric pressure.

   f. Remove the Lucas Cell from the emanation system, place the cell in the scintillation counting system and count for alpha activity for a least 1 hour.

2. Prepare a standard radon bubbler (Figure 2) as follows:

   a. Use a clean dry radon bubbler.

   b. Lubricate the two stopcocks sparingly with silicone stopcock grease (excess grease will block the stopcock passages). Open the bubbler at the 10/30 standard taper joint.

   c. Add four drops of Photoflo or other non-foaming wetting agent to the fritted glass disc of the radon bubbler to pre-wet the disc.

d. Close the gas inlet stopcock of the bubbler and add 10 mL of distilled or deionized water to the bubbler.

e. Spike the bubbler water with a known quantity of radium-226 (100 p Ci range).

f. Close the bubbler at the 10/30 standard taper (S/T) joint (lubricated sparingly with silicone grease).

g. Attach the He gas source to the bubbler inlet. Open bubbler inlet and outlet stopcocks and adjust the He gas pressure to 10 psi (through the capillary tube for 14 mL/min gas flow).

h. Flush the radon from the spiked water standard for 30 minutes at 14 mL/min.

i. Shut off the He gas purge, close inlet and outlet stopcocks of the bubbler, and record the data and time of day for the beginning of radon ingrowth.

j. Allow the radon to ingrow for one week or longer.

3. Attach the standard radon bubbler to the emanation apparatus (Figure 2), leaving the bubbler stopcocks closed (stopcock 1 and 2 of Figure 2).

4. Evacuate the emanation system by opening stopcocks 3 and 4 to the vacuum source (stopcocks 1 and 2 should still be closed).

5. Check the system for leaks by turning stopcock 4 to close off the vacuum source but still open between the manometer and the emanation system (stopcocks 1 and 2 should still be closed). Read the pressure on the manometer. If the system does not leak more than 1 cm on the manometer in 30 minutes, the system can be considered leak-free enough to proceed with radon emanation from the standard radon bubbler.

6. The approximate volume of the Lucas Cell should be known. Using the volume of the Lucas Cell calculate how many minutes of 14 mL/min. He gas emanation of the bubbler will be needed to satisfy the volume of the Lucas Cell at one atmosphere of pressure. For 3/4 of the emanation time the manometer will be isolated from the emanation system and for the last 1/4 of emanation time the manometer will be part of the emanation system.

7. Turn stopcock 4 to close off the manometer and the vacuum source from the emanation system. Record the date and time of day as the end of radon ingrowth. Then very carefully open stopcock 2 to allow the pressure of the bubbler and the emanation system to come to equilibrium (bubbles in the radium water subside as equilibrium is reached).

8. Then open stopcock 1 to allow He gas to flush through the water. Regulator should be set at 10 psi and He should be passing through a 10-inch length of thermometer capillary tubing.

9. When 3/4 of the emanation time has passed, close the Lucas Cell stopcock 3 (Figure 1) and turn stopcock 4 to open the manometer (but not the vacuum) to the emanation system, then open the Lucas Cell stopcock again, and observe the manometer pressure. As the system approaches atmospheric pressure or a few millimeters before, close the Lucas Cell stopcock, close stopcocks 1, 2 and 4, and turn off the He gas at the cylinder regulator.

10. Remove the Lucas Cell from the emanation system, and after 4-hours or more delay, place the Lucas Cell in the scintillation counting system and count the alpha activity. Record the time between the end of radon ingrowth and the mid-point of the alpha count as the decay time to be corrected for radon decay.

11. After recording the alpha counts the Lucas Cell should soon be returned to the emanation system with a clean and dry bubbler also attached to the system. Purge the Lucas Cell as desired in Step 1 and re-count for cell alpha background.

12. Calculations - Determine the factor cpm/pCi for each cell and label each cell with that factor.

$$\frac{\text{net cpm} \times \text{decay factor}}{\text{Ra-226 pCi} \times \text{radon ingrowth factor}} = \frac{\text{net cpm} \times e^{t_2}}{\text{Ra-226 pCi} \times (1 - e^{-t_1})} = \text{cpm/pCi}$$

where: t_1 = Radon ingrowth time in days
t_2 = Radon decay time in days

$$= \frac{0.693}{T_{1/2}\ \text{days}} = \frac{0.693}{3.82} = 0.1814d^{-1}$$

$T_{1/2}$ = half life of Radon-222 is 3.82 days.

SAMPLE ANALYSIS PROCEDURE

1. Prepare a sample radon bubbler (Figure 2) as follows:

   a. Use a clean dry radon bubbler.

   b. Lubricate the two stopcocks and the 10/30 S/T connection sparingly with silicone stopcock grease (excess grease will block the stopcock passage).

   c. Close both stopcocks and open the bubbler and at the 10/30 S/T connection.

   d. Add four drops of Photoflo or other non-foaming wetting agent to the fritted disc of the radon bubbler to pre-wet the disc.

e. Transfer a 10.0 mL aliquot of the water sample from the sample bottle to the radon bubbler. Close the bubbler immediately and attach it to the radon emanation system. Attach the He source to the gas inlet of the bubbler. The bubbler stopcocks (1 and 2 in Figure 1) should be closed at this time.

2. Proceed with Step 4 in the Calibration Section and continue through Step 11.

3. Calculations

$$\frac{\text{net cpm} \times \text{decay factor} \times \frac{1000\ \text{mL/L}}{10\ \text{mL}}}{\text{cpm/pCi}} = \text{pCi/L}$$

where:

net cpm	=	gross cpm for 10 mL aliquot-background cpm
decay factor	=	$e^{\lambda t}$, a number greater than unity
cpm/pCi	=	factor determined from calibration of each scintillation cell
pCi/L	=	picocuries per liter of water sample.

APPENDIX E

State of California
Department of Health Services
Berkeley, California

RADON SAMPLING
(SEB/SRL)

SAMPLING KIT

1. Small plastic bucket
2. Tygon tubing with faucet fitting
3. 4 oz. glass prescription bottles with caps
4. SRL Radiological Analysis Forms and Labels - one for each sample bottle

SAMPLING PROCEDURE

1. Attach Tygon tubing to faucet and direct delivery end to the bottom of the bucket. Slowly run the water into the bucket for approximately 5 minutes. Discard the water in the bucket at least once and allow the water to overflow during the remainder of the sampling.

2. Remove the prescription bottle cap and by hand, with the bottle in an upright position, carefully submerge the bottle and cap. Avoid agitating the water and minimize creation of bubbles. With the bottle under water, insert the end of the tubing into the bottle and allow the water to exchange to assure a fresh sample. Cap the bottle tightly while they are both under water.

3. After removing the capped bottle from the bucket, invert the bottle and check to see if any bubbles are present. If bubbles are present, empty the bottle and re-sample beginning with Step 2. However, in order to obtain duplicate samples representative of the same source, one must repeat Steps 1-3 above. Ordinarily, duplicates are taken at a frequency of at least one per every tenth sample but may be taken at a greater frequency depending upon program needs.

4. Wipe bottles thoroughly and attach an identification label to each dried bottle. Fill in the SRL Radiological Analysis Form completely. Note carefully that, because of the short half-life of radon (3.8 days), it is essential that date and time of collection be exact.

5. Return the samples to the laboratory as soon as possible, preferably by overnight mail or courier.

SRL (1/23/87)

APPENDIX F

INSTRUCTIONS TO PARTICIPANT LABORATORIES

October 29, 1986

Dear Colleague:

The following information and instructions are given for the multilaboratory test of two methods for Radon-222 (Rn-222) in water. In the letter, to which you responded, I described two types of water that are naturally occurring and contain Radon-22 (Rn-222). I planned at that time to include samples representing both types of water. However, since radium-226 (Ra-226) has its own concern and has been addressed extensively, I will use only the second type of water, one in which the radon-222 baring water is removed from its parent source.

Because of the short half life of Radon-222 and the relatively long transit times in shipping samples across the country, I have prepared standards and samples that contain their own sealed Ra-226/Rn-222 generating source. The source package is simply a 2.4 cm diameter filter paper on which a known amount of Ra-226 standard solution has been evaporated and air dried, and then sandwiched and sealed between two pieces of polyethylene film (5 mil). Radon-222 ingrown from the Ra-226 will transfer through the polyfilm to the water in which the source package is contained. As long as the filter paper in the package remains dry, there should be no Ra-226 getting to the water. A distinct advantage of these standards and samples is that new standard and sample Rn-222 source water can be made by simply changing the water in the bottle and allowing for another ingrowth of Rn-222.

For Rn-222 in-water standards using this type of Ra-226/Rn-222 generating source, it is important to know the transfer factor for Rn-222 getting to the water in which the source package is contained. In an experiment to determine the transfer factor 5 Ra-226/Rn-222 source packages were prepared by the techniques described above. Those 5 source packages were put into 60 ml glass bottles. To 5 other 60 ml glass bottles was added the same amount of Ra-226 activity (an aqueous solution) as was used for the 5 source packages. All 10 bottles were completely filled with deionized water and capped with Poly Seal caps. After an ingrowth period of 7 days, 10 ml aliquots of each bottle were analyzed for Rn-222 by the oil based liquid scintillator method. A comparison of the average cpm/pCi for the two sets of bottles showed the transfer factor to be 96.1% $\pm$ 3.4% at 95% confidence. This transfer factor is valid for standard and sample source packages that have been prepared as described above and have been contained in water in glass bottles with 20 mm Poly Seal caps. If these source packages were contained in water in glass bottles with another type of cap the transfer factor may be slightly different because it includes a small Rn-222 loss factor that is characteristic of each type of cap (the cap liner being the differentiating component).

I am sending one standard Ra-226/Rn-222 source and three sample Ra-226/Rn-222 sources to each participant. The Ra-226 activity of the standard Ra-226/Rn-222 source is listed on the standard bottle. The standard and sample source packages have been placed in 60 ml bottles, then completely filled with deionized water and capped with Poly Seal caps. Since Rn-222 will be ingrowing and transferring to the water in each bottle, the start of ingrowth is marked on each bottle. To report the Rn-222 concentration of the water samples you will need to know the total sample water content in each bottle. The total sample water weight is marked on each bottle.

By sending you this type of samples, I am modifying the sampling end of the commonly used liquid scintillation method, the modification being, collecting a full glass bottle of water from a free-flow non-aerating water tap, capping the bottle with a Poly Seal cap and sending it to the laboratory for analysis. In the commonly used liquid scintillation method, 10 ml portions of water from a free-flowing, non-aerating water tap are taken by a hypodermic syringe and added to liquid scintillation vials containing 10 ml of oil based liquid scintillator solution and shaken vigorously to extract the larger portion of the Rn-222 into the oil phase of the system. The vials are then taken or shipped to the laboratory for counting the Rn-222 activity. The significance of this modification of the sampling end of the liquid scintillation method may need to be addressed in a separate study.

The Rn-222 will be uniformly distributed in the standard and sample bottles without mixing before taking aliquots of the water for analysis. In an experiment to check the Rn-222 distribution without mixing, three 10 ml aliquots from each of 5 samples were taken and counted by liquid scintillation. The precision was 1.7 percent at 95 percent confidence.

When water samples are shipped to the laboratory as water-only samples (not as water/liquid scintillator mixtures), a detergent type liquid scintillator can be used. If the analyst is concerned about Ra-226 also present in the sample,

a second count about one week from the first count will indicate the significance of the Ra-226 fraction. A detergent liquid scintillator will give about 28% higher counting efficiency than the oil based liquid scintillator. You will note on the data sheets provided that both types of liquid scintillators are indicated. Please indicate which solution you used in the "Method Used" column.

Aeration and negative pressure should be minimized when transferring aliquots of the standard and sample water. All of the aliquots to be analyzed should be transferred to liquid scintillation vials or gas bubblers (for Lucas cell analysis) within a short time (within one hour) after opening the bottle to avoid loss of Rn-222 to the air layer above the water. Aliquots should be transferred to preweighed liquid scintillation vials containing 10 ml of liquid scintillator, or to preweighed gas bubblers, so that aliquot weights can be determined.

The following calculations can be used for both methods.

Using the standard provided, the Rn-222 cpm/pCi factor (F) is determined.

$$\text{Rn-222 cpm/pCi,} \quad F = \frac{\frac{A}{B} \times D \times E}{C \times G \times H}$$

then, using the factor F, the sample Rn-222 pCi/1000 g or p Ci/l is determined.

$$\text{Sample Rn-222 p Ci/1000 g (or pCi/l)} = \frac{\frac{A}{B} \times D \times E \times \frac{1000\ g}{A}}{C \times F \times 1\ (1000\ g)}$$

where:

A = Total standard or sample weight (g)
B = Standard or sample aliquot weight (g)
C = Rn-222 ingrowth factor, see attached table (see Note 1)
D = Aliquot net cpm at the midpoint of the count
E = Decay factor (decay time from the end of ingrowth to the midpoint of the count) see attached table)
F = Rn-222 cpm/pCi (see note 2)
G = Ra-226 pCi in the standard source package
H = Rn-222 transfer factor (the fraction of the ingrown Rn-222 in the standard source package that transferred to the water).

Note 1: An ingrowth factor is needed for the standard and samples provided because they are supplied with Rn-222 generating sources. An ingrowth factor will not be used for environmental samples. Only a decay factor will be needed for environmental samples.

Note 2: This factor can be used for the standard provided or other Ra-226/Rn-222 source packages prepared as described herein and contained in water in a glass bottle capped with a 20 mm Poly Seal cap. This factor can also be applied in the calculation for Rn-222 concentrations in environmental water samples that are collected in glass bottles, filled completely and capped with 20 mm Poly Seal caps.

If you have any questions about these instructions or the standards and samples provided, please contact Earl Whittaker at (702) 798-2134 (FTS 545-2134). Please send your test results to the following address by January 15, 1987. Thank you for your interest and participation in this study.

Sincerely,

Earl Whittaker
Lockheed Engineering and
Management Services Co., Inc.
Environmental Programs Office
1050 E. Flamingo Road, Suite 120
Las Vegas, NV 89119

EW:meo

cc: J.O. 70.12
WP-0802C

DATA REPORT SHEET - STANDARD Ra-226/Rn-222

Std No._____ Ra-226 Source Activity _____ pCi

Total Standard Water Weight _____g

Methods of measuring the Water for Rn-222

1. Lucas Cell (LC)
2. Liquid Scintillation (LS)
   a. Oil based scintillator solution (LS-O)
   b. Detergent scintillator solution (LS-D)

	Aliquot wt. g	Rn-222 Ingrowth (days)	Ingrowth Factor	Ingrown Rn-222 pCi	Aliquot Net cpm (decay Δt=0)	Ttl Std. Water cpm	Method Used	Factor cpm/ pCi
1.								
2.								
3.								
4.								
5.								
6.								

DATA REPORT SHEET - SAMPLE A

Sample A _____, Total Sample Water Weight _____g

Methods of measuring the Water Sample for Rn-222

1. Lucas Cell (LC)
2. Liquid Scintillation (LS)
   a. Oil based scintillator solution (LS-O)
   b. Detergent scintillator solution (LS-D)

	Aliquot Grams (g)	Rn-222 Ingrowth days	Aliquot (decay Δt=0) Net CPM	Method Used	Total Sample CPM	Total Sample Rn-222 pCI	RN-222 pCi/1000g
1.							
2.							
3.							
4.							
5.							
6.							

DATA REPORT SHEET - SAMPLE B

Sample B _____, Total Sample Water Weight _____g

Methods of measuring the Water Sample for Rn-222

1. Lucas Cell (LC)
2. Liquid Scintillation (LS)
   a. Oil based scintillator solution (LS-O)
   b. Detergent scintillator solution (LS-D)

	Aliquot Grams (g)	Rn-222 Ingrowth days	Aliquot (decay Δt=0) Net CPM	Method Used	Total Sample CPM	Total Sample Rn-222 pCi.	RN-222 pCi/1000g
1.							
2.							
3.							
4.							
5.							
6.							

DATA REPORT SHEET - SAMPLE C

Sample C _____, Total Sample Water Weight _____g

Methods of measuring the Water Sample for Rn-222

1. Lucas Cell (LC)
2. Liquid Scintillation (LS)
   a. Oil based scintillator solution (LS-O)
   b. Detergent scintillator solution (LS-D)

	Aliquot Grams (g)	Rn-222 Ingrowth days	Aliquot (decay Δt=0) Net CPM	Method Used	Total Sample CPM	Total Sample Rn-222 pCi	RN-222 pCi/1000g
1.							
2.							
3.							
4.							
5.							
6.							

RADON-222 INGROWTH

Δt (days)	Factor $(1-e^{-\lambda t})$
1	0.16590
2	0.30428
3	0.41970
4	0.51597
5	0.59627
6	0.66325
7	0.71911
8	0.76571
9	0.80458
10	0.83700
11	0.86404
12	0.88660
13	0.90541
14	0.92110
15	0.93419
16	0.94511
17	0.95422
18	0.96181
19	0.96815
20	0.97343
21	0.97784
25	0.98927
30	0.99567

RADON-222 DECAY

Δt (Hrs)	Factor ($A_o = A_t e^{\lambda t}$)
1	1.00758
2	1.01523
3	1.02293
4	1.03069
5	1.03851
6	1.04639
7	1.05433
8	1.06233
9	1.07039
10	1.07851
11	1.08669
12	1.09494
13	1.10325
14	1.11162
15	1.12005
16	1.12855
17	1.13711
18	1.14574
19	1.15443
20	1.16319
21	1.17201
22	1.18091
23	1.18986
24	1.19889

Δt (days)	Factor ($A_o = A_t e^{\lambda t}$)
1	1.19889
2	1.43735
2	1.72323
4	2.06597
5	2.47688
6	2.96952
7	3.56014
8	4.26823
9	5.11716
10	6.13494