APTD-1516

LOW EMISSION BURNERS FOR AUTOMOTIVE RANKINE CYCLE ENGINES

U.S. ENVIRONMENTAL PROTECTION AGENCY
Office of Air and Water Programs
Mobile Source Pollution Control Program
d Automotive Power Systems Development Division
Ann Arbor, Michigan 48105

APTD-1516

LOW EMISSION BURNERS FOR AUTOMOTIVE RANKINE CYCLE ENGINES

Prepared by

Herbert R. Hazard, Robert D. Fischer, and Clarence McComis

Battelle
Columbus Laboratories
505 King Avenue
Columbus, Ohio 43201

Contract No. EHS 70-117

EPA Project Officers:

F. Peter Hutchins and K. F. Barber

Prepared for

U.S. ENVIRONMENTAL PROTECTION AGENCY
Office of Air and Water Programs
Mobile Source Pollution Control Program
Advanced Automotive Power Systems Development Division
Ann Arbor, Michigan 48105

April 1973

The APTD (Air Pollution Technical Data) series of reports is issued by the Office of Air Quality Planning and Standards, Office of Air and Water Programs, Environmental Protection Agency, to report technical data of interest to a limited number of readers. Copies of APTD reports are available free of charge to Federal employees, current contractors and grantees, and non-profit organizations - as supplies permit - from the Air Pollution Technical Information Center, Environmental Protection Agency, Research Triangle Park, North Carolina 27711 or may be obtained, for a nominal cost, from the National Technical Information Service, 5285 Port Royal Road, Springfield, Virginia 22151.

This report was furnished to the U.S. Environmental Protection Agency by Battelle Columbus Laboratories in fulfillment of Contract No. EHS 70-117 and has been reviewed and approved for publication by the Environmental Protection Agency. Approval does not signify that the contents necessarily reflect the views and policies of the agency. The material presented in this report may be based on an extrapolation of the "State-of-the-art." Each assumption must be carefully analyzed by the reader to assure that it is acceptable for his purpose. Results and conclusions should be viewed correspondingly. Mention of trade names or commercial products does not constitute endorsement or recommendation for use.

Publication No. APTD-1516

TABLE OF CONTENTS

	Page
INTRODUCTION	1
CONCLUSIONS	2
SUMMARY	3
DEVELOPMENT GOALS	5
BURNER CONCEPTS	7
BURNER TEST CONDITIONS AND INSTRUMENTATION	8
FUEL NOZZLE DEVELOPMENT	11
BURNER DEVELOPMENT TO REDUCE NO_x EMISSION LEVELS	12
Configuration A	12
Configuration B	14
Configuration C	15
Configuration D	18
Configuration E	19
EXHAUST-GAS RECIRCULATION	21
Experimental Techniques	21
Emission Data for Configuration B	24
Emission Data for Configuration E-2	28
DISCUSSION OF THERMAL AND CHEMICAL ASPECTS OF EGR	32
EFFECT OF FUEL NITROGEN CONTENT ON NO_x EMISSION	34
ANALYTICAL PREDICTIONS OF HEAT TRANSFER and NO_x GENERATION	37
AUXILIARY POWER REQUIREMENTS	39
GAS SAMPLING AND ANALYSIS STUDY	40
REFERENCES	43

LOW-EMISSION BURNERS FOR AUTOMOTOVE RANKINE-CYCLE ENGINES

by

Herbert R. Hazard, Robert D. Fischer,
and Clarence McComis

INTRODUCTION

The Rankine-cycle engine has been selected by the U.S. Environmental Protection Agency as one of the most promising candidates for the automotive engine of the future because of its potential for low emission of air pollutants. However, automotive service imposes severe demands upon a Rankine-cycle combustion system, including an extremely wide turn-down range, very small size, and low pressure drop to minimize auxiliary power. In view of the difficulty anticipated in meeting such requirements, development of combustion technology was one of the first tasks to be started in the EPA Advanced Automotive Power Systems Program for development of automotive Rankine-cycle engines. This report discusses results of a combustion technology program carried out at Battelle, Columbus Laboratories under this program.

CONCLUSIONS

In the course of developing a burner to meet all contract requirements, and the 1976 Federal Emission Standards as well, various burner design features were explored and considerable insight into the technology of low-emission combustion was obtained. It proved possible to meet all contract requirements, including burner volume, auxiliary power limit, and emission limits, by use of a suitable combination of design features, and with air atomization of fuel.

Burner Configuration E-2, which met all contract requirements, was a rich-primary burner having internal cooling of the primary zone with boiler tubes. It could be operated over the firing range from 110 to 1 lb fuel per hour and met emission goals at all firing rates. Total volume based on exterior dimensions was 0.95 ft^3, compared with the contract goal of 1.3 ft^3. Auxiliary power without EGR was 1.49 hp, compared with the contract goal of 2.0 hp; with 10 percent EGR, auxiliary power was 1.97 hp. The use of EGR provided a significant reduction of NO_x emission.

Burner B, a cooled, lean-primary burner, could meet emission requirements for firing rates above 20 lb/hr. However, when fired with 10 percent EGR, at firing rates of 5 and 10 lb/hr, NO_x emissions were about 36 percent above the goal and were not improved by EGR.

The factor of air atomization, upon which the program was based, proved very important. It was found that atomizers of conventional design did not provide good fuel atomization and dispersion over the required turndown ratio of 100:1, and a commercial acoustic-type of air-atomizing nozzle of unique design was improved to meet this requirement. Air atomization also had a significant effect on combustor geometry, in that atomizing air provided sufficient turbulence for combustion at the lowest firing rates, and variable-geometry design proved unnecessary as a means of promoting turbulence.

The effect of fuel nitrogen content upon NO_x emission from Burner E-1 was explored. It was found that 50 to 90 percent of the fuel nitrogen was converted to NO_x in combustion. It was concluded that very low fuel nitrogen content should be specified for Rankine-cycle burners. The nitrogen content of kerosene and gasoline-type fuels is normally below 10 ppm, which should meet all requirements for low-NO_x combustion.

SUMMARY

In the course of the program burners based on four different burner concepts were developed and evaluated. Each of these was optimized by experimental development, and data for the optimum configurations are reported.

Early in the program it was found that emission goals for CO, HC, and smoke could be easily met, but that NO_x emission levels far exceeded goals. Accordingly, development was concentrated on meeting NO_x emission goals, and only NO_x data are reported for those combustors that did not meet NO_x goals.

Configuration A, the first burner developed, was a compact, uncooled, lean-primary burner. It met all contract requirements except for emission of NO_x, which far exceeded goals.

Configuration B, a cooled, lean-primary burner, was aerodynamically similar to Configuration A. The use of water-cooled coils to cool the combustion space reduced NO_x emission significantly, but it still exceeded emission goals.

Configuration C was an uncooled burner with a rich primary zone followed by a lean secondary zone. The proportion of the total combustion air admitted to the primary zone was varied over a wide range, and it was found that lowest NO_x emission was obtained with about 60 percent of the total air admitted to the primary zone. NO_x emission was above goals, however.

Configuration D was a cooled, rich-primary burner, in which the effect of cooling was explored by use of three different water-cooled coils, used separately and in combination. NO_x emission for Configuration D met contract goals.

Configuration E was basically similar to Configuration D, with the exception that a conical cooling coil around the burner throat was replaced by a smooth water-cooled conical surface to improve burner aerodynamics. In doing this the air film slot at the upstream end of the burner cylinder was closed. NO_x emission characteristics were similar to those

for Burner D, but considerably more excess air was needed to meet CO requirements. Accordingly, a film slot was added in the secondary zone to provide air to burn CO flowing along the burner wall. This modified design, Configuration E-2, was the final design evaluated and met all contract requirements.

The effect of EGR (Exhaust Gas Recirculation) on NO_x emission was explored using Configuration B and Configuration E-2. It was found that EGR reduced NO_x emission significantly for both configurations. The use of 10 percent EGR in Configuration B brought NO_x emission below goals at firing rates of 20 lb/hr or more, but did not improve NO_x emission at firing rates of 5 and 10 lb/hr. The use of EGR in Configuration E-2 also reduced NO_x emission significantly, with no significant change in emission of CO and HC. All emissions were below goals for all firing rates and EGR ratios.

With total auxiliary power limited to 2.0 hp, Configuration E-2 could be fired with about 10 percent of EGR. This would provide the lowest emission levels of any burner design and operating mode evaluated during this program.

The effect of fuel nitrogen was investigated by firing fuel doped with varying amounts of pyridine in Burner E-1. It was found that a significant proportion of the nitrogen in the pyridine was converted to NO_x, the proportion varying from about 90 percent for 0.01 percent fuel nitrogen, to about 55 percent with 0.44 percent fuel nitrogen. It was concluded that a significant proportion of fuel nitrogen occurring in natural organic compounds would be converted to NO_x in a similar manner, although the exact percentage might be somewhat different than for pyridine, and that control of fuel nitrogen content would be needed to assure low NO_x combustion in burners of this type.

DEVELOPMENT GOALS

The objective of the program was to develop a full-scale burner suitable for an automotive Rankine-cycle engine. The contract goals include a 100:1 turndown ratio with firing rates from 2,000,000 Btu/hr to 20,000 Btu/hr, combustion volume of 1.3 ft^3 or less, and total mechanical power input to fans and compressors of 2 hp or less. The fan power was specified as that needed to overcome burner pressure drop, and does not include any additional power needed to overcome boiler pressure drop.

Emission goals for the program were the 1980 AAPS Goals, listed as contract goals in Table 1. For comparison, the 1976 Federal Emission Standards for Light Vehicles are also tabulated; these are of greater current interest than the contract goals, although they had not yet been promulgated when the program was begun.

Emission goals are specified in units of grams per vehicle mile. For this burner development program, EPA specified that goals be converted to units of grams per kilogram fuel, or mol ppm, by assuming vehicle operation at 10 miles per gallon of fuel for all test conditions.

TABLE 1. CONTRACT EMISSION GOALS COMPARED WITH 1976 FEDERAL STANDARDS

	Contract Goals			1976 Federal Standards		
Pollutant	g/mile	g/kg fuel	mol ppm*	g/mile	g/kg fuel	mol ppm*
CO	4.7	16.25	797	3.4	11.8	576
NO_x as NO_2	0.4	1.38	40	0.4	1.38	40
HC	0.14	0.48	53	0.4	1.85	152
Particulates		0.10	4.2	-	-	-
Smoke	(no visible smoke)		-	-	-	-

* Mol ppm calculated for 140 percent of stoichiometric air.

For convenience in day-to-day data reduction and plotting, emission data were plotted as mol ppm of pollutant as measured. In order to accommodate the dilution of a pollutant with increasing excess air, the emission goals were expressed as curves in which concentration decreased with increasing excess air. This avoided the necessity of calculating a "corrected" pollutant concentration for every data point, and also showed the variation of actual concentration with excess air. Data for final configurations were also plotted as g/kg fuel, which are not affected by variations of excess air.

BURNER CONCEPTS

The selection of the burner design and the fuel atomizer was influenced heavily by the specified turndown ratio of 100:1 and the need to meet 1976 emission standards. Experimental burners were based upon the following concepts:

(1) Air atomization of fuel
(2) Swirl stabilization of flame
(3) Both lean and rich primary zones
(4) Both cooled and uncooled primary zones
(5) Exhaust gas recirculation.

The selection of air atomization was heavily influenced by the requirement for 100:1 turndown ratio. The swirl-stabilized burner was designed for excellent mixing of fuel and primary air to minimize gradients of fuel-air ratio to the extent possible, and to provide good combustion over a wide range of fuel-air ratios. The use of a one-stage burner with a lean primary zone and the alternative use of a two-stage burner with a rich primary zone were both explored, and they had different emission characteristics. In addition, the use of boiler tubing for cooling of the primary zone was explored as a device for reducing NO_x emission. The effects of EGR (exhaust gas recirculation) were investigated for the best cooled lean-primary and rich-primary burners.

No commercially available fuel nozzles were found that could meet the requirement of 100:1 turndown with good fuel dispersion and atomization over the entire range. A Sonicore^R 125 H resonant acoustic, air-atomizing nozzle was improved during the program by changing internal details to improve fuel dispersion, and to improve burner performance at firing rates below 3 lb/hr. It is believed that fuel atomization was unusually fine, accounting for the clear blue flame observed under most firing conditions. Atomizing air provided most of the turbulence for combustion at very low firing rates, where burner pressure drop approached 1/10,000 that at full rating.

BURNER TEST CONDITIONS AND INSTRUMENTATION

All burner tests were run at atmospheric pressure, with combustion air at about 100 F. Jet A kerosene fuel was fired at rates from 1 to 110 lb/hr, and air-flow rates were varied to provide 60 percent to 185 percent of stoichiometric air at several firing rates. This permitted plotting data in terms of fuel-air ratio and firing rate over a wide range of conditions.

Figure 1 is a drawing showing the arrangement of the burner test rig and Figure 2 is a photograph of the test rig. Burner air flow was measured with a single ASME orifice having a hot-film sensor at the center. The linearized output from the hot-film anemometer permitted accurate readings of flow rate over a 100:1 range, equivalent to a 10,000:1 range in orifice pressure drop. This meter was calibrated against a Flow Prover using several sizes of critical-flow nozzles, and proved linear within 1 percent over the range of use.

Fuel flow was measured by a Cox Series 12 variable area meter containing two calibrated rotameter tubes, each with a logarithmic scale suitable for readings to an accuracy of 1 percent of reading at any point on the scale. Fuel temperature was held constant to simplify metering.

Exhaust gas was sampled with water-cooled probes. One long, straight probe was pivoted at its midpoint and arranged so that, with the pivot on the burner axis, the burner diameter could be traversed at various distances from the inlet, covering any desired point on the cross-section. This probe was lined with a quartz tube to avoid catalytic destruction of NO_2 in the presence of CO when traversing within the flame.[(1)] * A second probe, placed across the burner outlet, contained 12 holes spaced to align with the centers of 6 equal annular areas, to provide a sample representative of the average outlet analysis. This probe was of water-cooled stainless steel construction and was unlined, as it was not intended for use in reducing atmospheres. From the probe the gas sample was passed through an ice trap for water removal before

* Numbers in parentheses designate References at end of report, page 43.

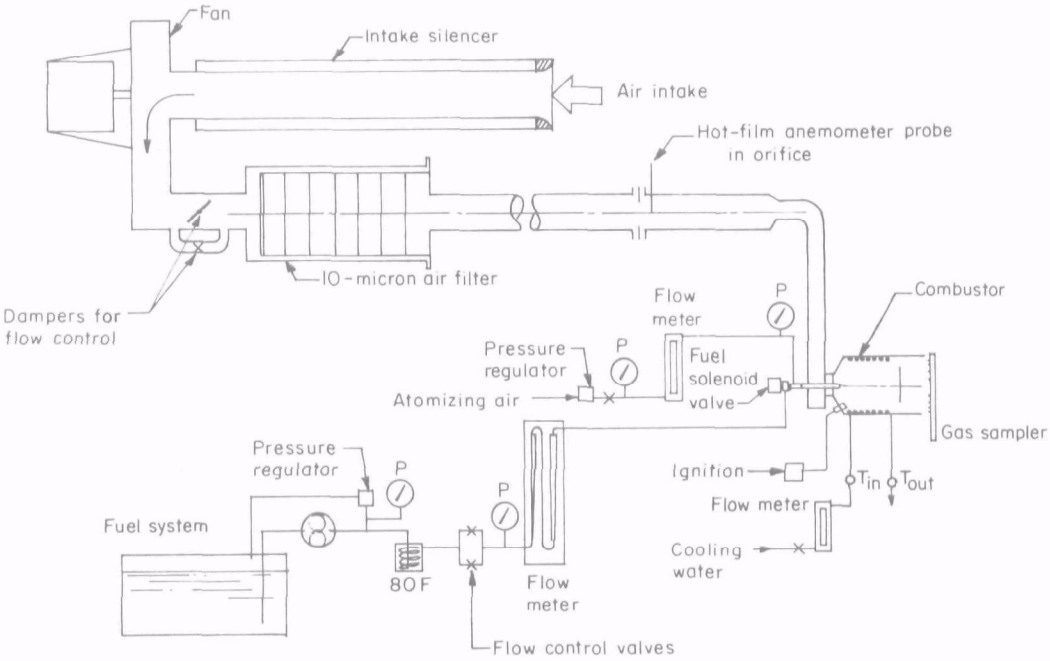

FIGURE 1. SCHEMATIC ARRANGEMENT OF TEST RIG FOR LOW-EMISSION BURNER DEVELOPMENT

FIGURE 2. PHOTOGRAPH OF TEST RIG FOR LOW-EMISSION BURNER DEVELOPMENT

entering the analytical instruments. The gas sample was drawn through the analytical system with a water aspirator at a rate monitored with a rotameter.

NO_x was measured for Configurations A, B, and C (described later) with a Mast NO_2 meter, and NO only was measured for Configuration D with a Beckman NDIR instrument. The electronic circuit of the Mast meter was modified to provide a 0-200 ppm scale range and the meter was calibrated before and after each test. Although the Mast NO_2 meter measured only NO_2, it was used to measure NO_x by conditioning the gas sample to oxidize all NO to NO_2. This was done in an acidified dichromate scrubber which also removed SO_2, an interfering compound.

NO was measured for configuration D with a Beckman Model 315 NDIR (nondispersive infrared) analyzer. The instrument was calibrated daily with zero gas and span gas. The NDIR instrument was used in preference to the Mast NO_2 meter when it became available because it greatly speeded data taking. However, data obtained with both instruments were closely comparable and appeared reliable and consistent. It was recognized that, in condensing water from the gas sample before analysis, some indeterminate amount of NO_2 might be dissolved in the condensed water and lost. The NO_2 quantity was later shown to be about 10 ppm, a value small enough that it would not alter results or conclusions significantly. When using the NDIR, which is extremely sensitive to water, the gas sample from the ice trap was passed through a dry-ice trap packed with glass wool, and a Dryrite dessicent bed. With this drying train the calibration was unchanged when span gas was bubbled through water, indicating that water removal was adequate.

Near the end of the program a TECO* Chemiluminescence Analyzer, which measures NO, was used with a 300-F sampler and sampling lines to provide NO analysis of the wet gas sample. This instrument included a converter to convert NO_2 to NO, so that either NO_x or NO could be measured by using or bypassing the converter. With this instrument and the hot sampling system, the NO_x values measured were somewhat higher than NO values for the NDIR system with moisture removal. It proved possible

---

* Thermoelectron Engineering Company

to obtain the same level of values with the NDIR by using the hot sampling system, an NO_2 to NO converter followed closely by a water trap, and the NDIR analyzer. These systems were used in studying the effect of fuel nitrogen on NO_x emission. For EGR studies an Aerochem chemiluminescence analyzer was used in combination with the TECO converter, with a water trap between to avoid plugging of the flow-metering capillary tube within the analyzer. Careful comparisons of analyses of bagged gas samples showed that this moisture trap did not influence NO and NO_x data.

CO was measured with a Beckman Model 215A NDIR analyzer having 0-250 ppm and 0-2000 ppm scale ranges.

HC (unburned hydrocarbons) was measured with a Beckman 402 hydrocarbon analyzer. This instrument utilizes a flame-ionization detector, and the entire instrument and sampling system operate at 400 F to prevent condensing of hydrocarbons before analyses.

Oxygen was measured with a Beckman Process Oxygen Analyzer having scale ranges of 0-5 and 0-25 percent.

FUEL NOZZLE DEVELOPMENT

Low-emission combustion requires good fuel atomization and uniform fuel dispersion within a combustion space to avoid over-rich and over-lean local regions. Providing good fuel atomization and dispersion over a flow range of 100:1 proved difficult, as none of the available commercial nozzles proved satisfactory for this operating range. Use of an air-assist nozzle, in which compressed air is used to provide atomization energy at the lowest fuel rates, proved unsatisfactory because of the poor fuel dispersion at the lowest rates. However, Sonicore[R] acoustic air-atomizing nozzles, a form of modified Hartman whistle, proved nearly satisfactory. Performance of the Sonicore[R] nozzles for this application was greatly improved by two changes: the first was to make a nozzle sized exactly for the flow requirement, using a 0.089-in. air venturi at the center. The second change was to use 8 radial fuel-admission holes instead of four, to provide more uniform distribution of fuel. With these

changes the nozzle could be operated over the desired flow range and combustion could be maintained at 1 lb fuel per hr. (However, this required a reduction of atomizing-air pressure with fuel flow rates below 10 lb/hr.)

The modified Sonicore[R] nozzle, designated the S-089-8 was used in all of the combustors described in this report. It requires 24 lb per hr of atomizing air at 34 psi, equivalent to 0.5 air horsepower. A modified nozzle with a 0.125 throat diameter gave slightly better atomization and required 29 lb atomizing air per hr at a pressure of 15 psi, equivalent to 0.33 air horsepower. Although the minimum firing rate with this nozzle was 1.8 lb fuel per hr, it would be preferable where this minimum rate is acceptable.

BURNER DEVELOPMENT TO REDUCE NO_x EMISSION LEVELS

The initial research approach was based upon use of a lean-primary uncooled burner having very fine fuel atomization and high vortex intensity to minimize gradients of air-fuel ratio to the extent possible. This burner met all research goals except that of NO_x emission, which was excessive. Accordingly, other approaches were explored, and the principal concern became that of meeting NO_x emission goals.

Configuration A

Figure 3 shows Configuration A, a simple, swirl-stabilized burner, with all air admitted through a scroll to a 4-in. diam. burner throat. The air-atomizing fuel nozzle was placed at the center of the air inlet, so that fuel and air were intimately mixed very close to the burner throat. A metal disk at the burner outlet restricted the outlet area to an annular slot. This had little effect on burner pressure drop, but made a significant difference in flow patterns. Without this disk, atmospheric air was aspirated into the open combustor outlet, diluting the burning mixture and distorting test results. This would not be a problem when firing into a boiler. Configuration A represents the result of considerable optimization of dimensions and vortex energy.

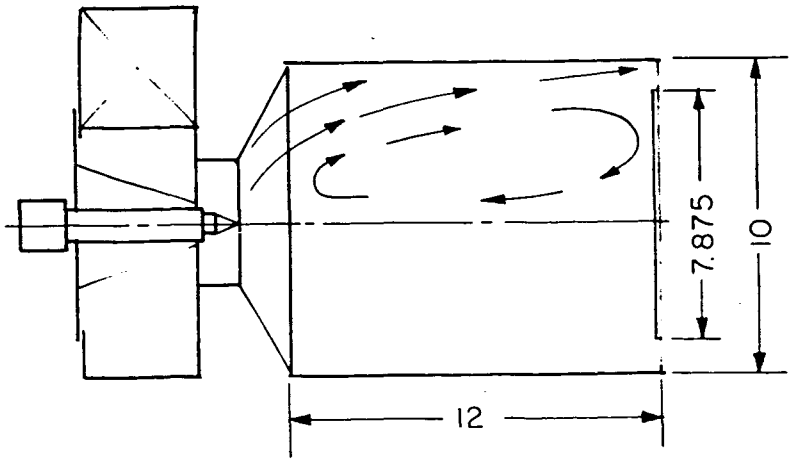

FIGURE 3. BURNER CONFIGURATION A

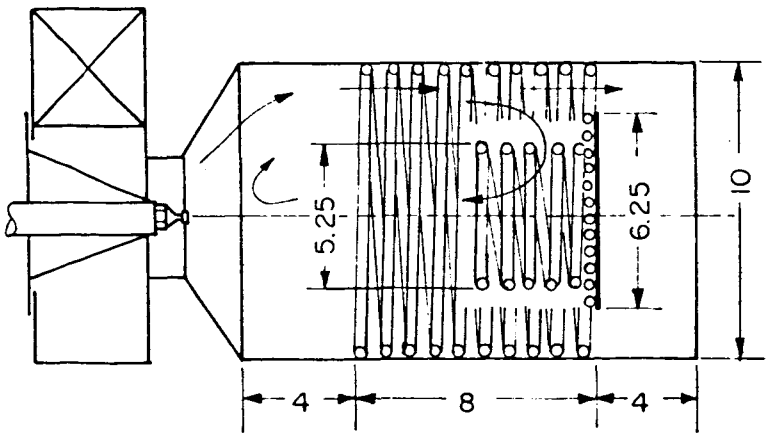

FIGURE 5. BURNER CONFIGURATION B

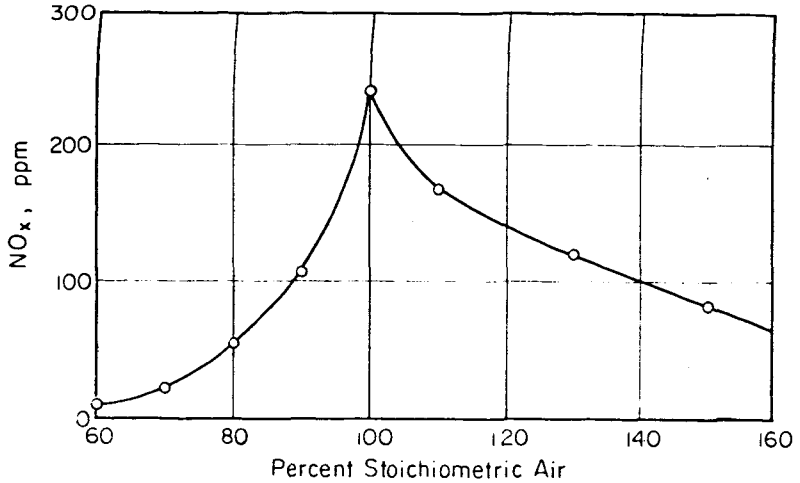

FIGURE 4. VARIATION OF NO_x WITH PERCENT OF STOICHIOMETRIC AIR FOR CONFIGURATION A
Fuel flow rate, 50 lb/hr

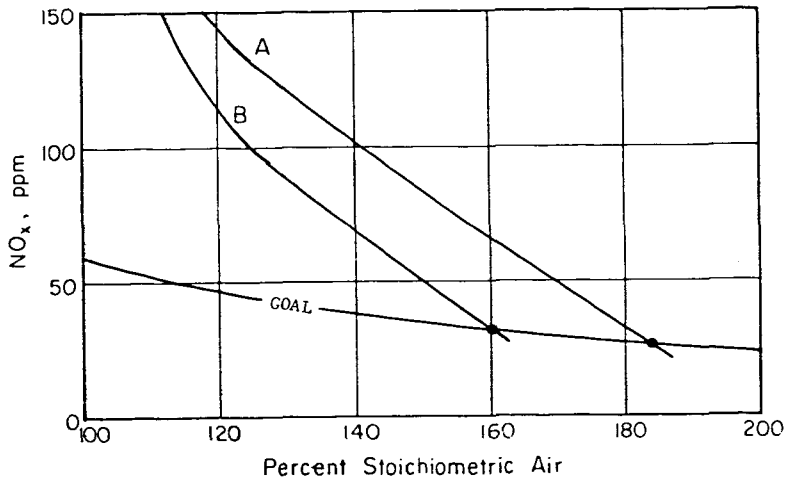

FIGURE 6. VARIATION OF NO_x WITH PERCENT OF STOICHIOMETRIC AIR FOR CONFIGURATIONS A AND B
Fuel flow rate, 50 lb/hr

Configuration A operated well at firing rates from 1 lb per hr to 110 lb per hr of fuel, and with air-fuel mixtures varying from about twice stoichiometric fuel to about twice stoichiometric air (fuel equivalence ratio from 1.8 to 0.6). At the leanest condition (near 200 percent of stoichiometric air) emission of odor, CO, and HC was becoming apparent, but the flame was stable.

Figure 4 shows NO_x emission data for Configuration A at a constant firing rate of 50 lb fuel/hr, over a range of air-flow rates. Air flow is expressed as percentage of stoichiometric air to provide a linear scale. The NO_x level peaks at 250 ppm at 100 percent of stoichiometric air and falls sharply with richer or leaner mixtures. In other tests with somewhat different swirl intensity, levels as high as 600 ppm NO_x were measured. NO_x level was essentially constant when firing rate was varied from 10 to 110 lb/hr at a constant value of air-fuel ratio. All NO_x data are expressed in ppm as measured. The "goal" curve includes dilution corrections for excess air.

The levels of CO, HC, and smoke were very low at all firing conditions from 120 to 180 percent of stoichiometric air. HC levels were about 1 ppm, compared with atmospheric levels of 6 to 8 ppm, and CO levels were generally below 100 ppm. With the blue-flame operation typical of this burner, no smoke could be measured by the ASTM smoke-spot technique with 110 percent or more of stoichiometric air.

Configuration B

Figure 5 shows Configuration B, a burner of the same size and shape as Configuration A except that considerable water-cooled tubing was added as a way of reducing flame temperature, and length was extended 4 in. to provide space to burn out CO and HC which was formed close to the cold surfaces.

Figure 6 shows NO_x emission levels for both Configuration A and Configuration B. It will be noted that NO_x levels were reduced by 30 ppm by the cooling surface in Configuration B. The lower curve, marked "goal", is the level of NO_x emission required to meet 1976 Federal emission standards for passenger cars. Rather high levels of excess air are required to meet these goals with these burners, which affects fan power.

Configuration C

Figure 7 shows Configuration C-2, which incorporates staged air admission. A rich-primary zone, in which little NO is formed, is followed by a lean secondary zone where air is added to complete the combustion and dilute combustion products to a moderate temperature within a few milliseconds, thus kinetically limiting the amount of NO formed in the secondary zone.

The data of Figure 4 suggests that the primary zone should be quite rich to minimize NO formation there. However, if the primary zone is too rich, the combustion temperatures reached in the secondary zone cause formation of excessive NO there. Thus, there is an optimum distribution of air between primary and secondary zones for minimum overall NO emission. Several uncooled, staged-air-admission burners having different secondary-air hole patterns and different proportions of primary and secondary air were studied to explore this effect.

Figure 8 shows the variation of NO_x with percent of stoichiometric air for four different uncooled staged-air admission burners with rich primary zones. A curve for Confirguration A is included for comparison. Configuration C-1 looked similar to Configuration C-2, Figure 7, but the liner was 10 in. in diameter and 14 in. long. Secondary air was admitted through two rings of 8 holes of 5/8-in. diameter and one ring of 16 holes of 7/16-in. diameter. With this arrangement, about 60 percent of the total air entered the primary zone and the overall pressure drop was only 5.5 in. wg (water gage) at 110 lb fuel/hr. Fuel and air mixing were relatively poor, the exit gas being rich at the edges and lean at the center, and the flame was a heavy yellow in color. However, NO_x levels were low.

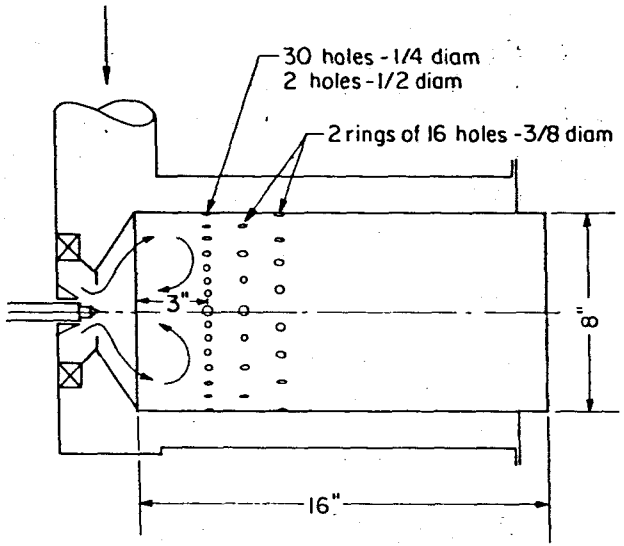

FIGURE 7. BURNER CONFIGURATION C-2

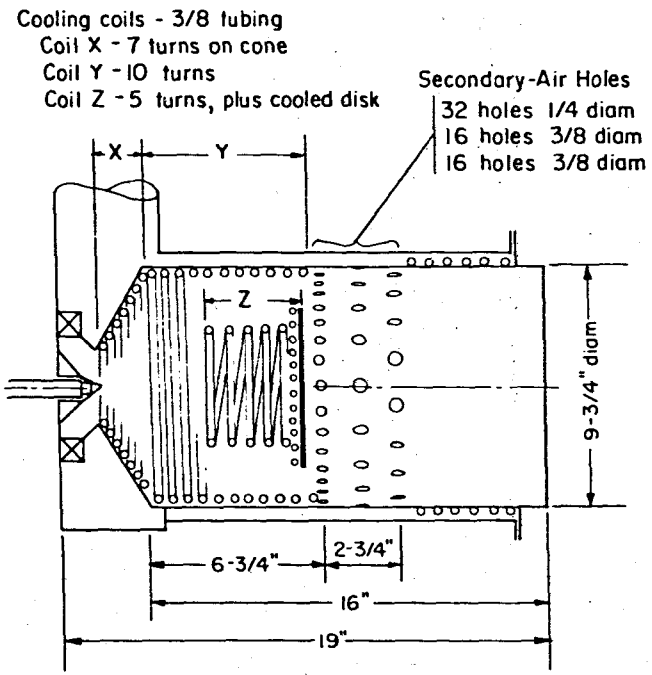

FIGURE 9. BURNER CONFIGURATION D

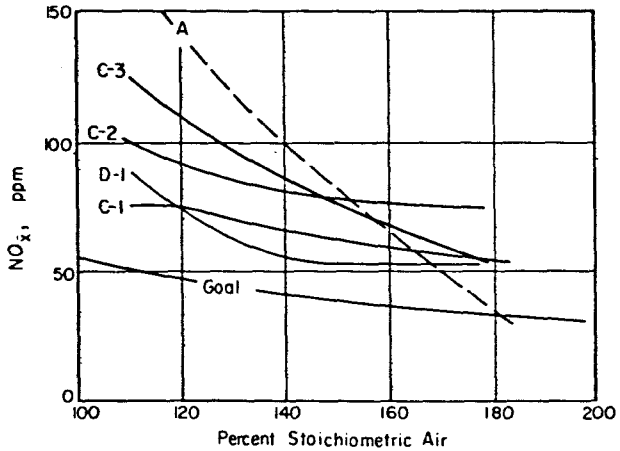

FIGURE 8. VARIATION OF NO_x WITH PERCENT OF STOICHIOMETRIC AIR FOR CONFIGURATION C
Firing rate, 50 lb/hr

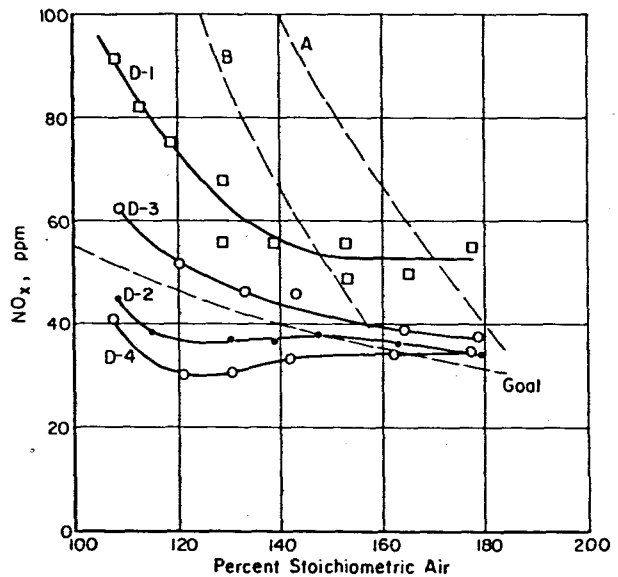

FIGURE 10. VARIATION OF NO_x WITH PERCENT OF STOICHIOMETRIC AIR FOR CONFIGURATION D
Firing rate, 50 lb/hr

Configuration C-2, shown in Figure 7, utilized a smaller liner and smaller secondary-air holes. Pressure drop was 7.8 in. wg at 110 lb fuel/hr and the distribution of fuel and air was excellent. The flame appeared uniform and outlet profiles of oxygen and temperature were flat. However, NO_x emission levels were considerably higher than for Configuration C-1. It should be pointed out that the exit temperature was nearly uniform at 3200 F with 120 percent of stoichiometric air, so that the 90 ppm NO_x measured for this condition is not high in comparison with data for conventional burners.

Configuration C-3 was like Configuration C-2 except that the primary-zone air was reduced from 60 percent to 40 percent of the total. The result was an NO_x emission curve approaching that for Configuration A, with all primary air. It appears that all of the NO_x of Configuration C-3 is formed in the secondary zone where most of the combustion takes place.

Configuration D-1 was an uncooled version of Configuration D, shown in Figure 9. The primary-zone swirl register and the secondary-air hole arrangement were the same as for Configuration C-2, but the primary zone was lengthened and the liner diameter increased to permit addition of cooling coils. About 66 percent of the total air entered the primary zone. Configuration D-1 had the lowest NO_x emission level of any of the staged-air-admission burners for operation with more than 120 percent of stoichiometric air. Fuel and air were well mixed and outlet temperature and oxygen profiles were nearly flat.

From Figure 8 it may be seen that the NO_x curve for a lean-primary burner (A) is much steeper than curves for the rich-primary burners (C-1, C-2, C-3, and D-1). At the richer end of the operating range the rich-primary burners emit less NO_x, but they may emit more than the lean-primary burner at the lean end of the range. It appears that the peak emission level for the rich-primary burners occurs with stoichiometric fuel-and-air proportions in the primary zone, followed by dilution in the secondary zone. The rich-primary burner appears to offer the advantage of low NO_x emission if optimized for the desired overall air-fuel ratio.

Configuration D

Figure 9 shows Configuration D, including three separate water-cooled coils that were used to study cooling effects. Configuration D-1, discussed above, was uncooled except for a coil placed outside the liner near the exit to avoid overheating the liner. Configuration D-2 utilized Coil X, a conical coil placed at the burner end of the liner. Configuration D-3 utilized only Coil Y, a cylindrical coil on the primary-zone surface. Configuration D-4 utilized both Coil Y and Coil Z, which included a water-cooled disk separating the primary and secondary zones and a small coil extending into the center of the primary zone. For all of these configurations the estimated primary-zone flow was 66 percent of the total air flow.

Figure 10 shows NO emission data for the cooled, rich-primary burners. These data were taken with an NDIR analyzer and do not include NO_2. It was later found that NO_2 values were about 10 ppm. NO_x data for configurations A and B are included for comparison.

The lowest NO emission data in Figure 10 are for Configuration D-4, with the most cooling. However, the smallest coil, Coil X, used in Configuration D-2 was almost as effective as all of the other coils combined. Its position close to the fuel spray appears to provide maximum NO reduction with minimum heat removal. The large cylindrical Coil Y proved least effective in reducing NO, although it removed the most heat of any single coil, at 3.8 percent of the heat released. It appears significant that a small coil at the right location has a very large effect on NO emission.

The curves in Figure 10 show that the combination of staged air admission and cooling resulted in lower NO emission levels than either staged air admission or cooling used independently. The NO emission levels for Configurations D-2, D-3, and D-4 are all lower than those for the uncooled D-1 having similar air admission, and well below those for Configuration B, the cooled lean-primary burner. Temperature measurements in Configuration D-4 showed that the primary-zone exit temperature was 2340 F and the outlet temperature was about 2800 F when fired at 50 lb/hr. These temperatures are too low for NO formation at high rates.

Configuration E

Configuration E, shown in Figure 11, was an improved rich-primary burner. It was similar to Configuration D except that a smooth, water-cooled cone was installed at the burner end to replace the conical cooling coil, which interfered with air flow from the burner throat, and a 1/8-in. film-air slot was installed between rings of dilution-air holes near the outlet. The air flow to the primary zone was 51 percent of the total. The cooling surfaces removed 10 percent of the heat released at a firing rate of 50 lb/hr, this percentage decreasing at higher firing rates and increasing at lower firing rates. All cooling surface was cooled in all tests.

When Configuration E-1, without the film-air slot, was evaluated it was found that CO concentrations along the outside surface of the burner were high enough to significantly increase overall CO emission levels. Addition of the film slot, to make Configuration E-2, flattened the burner-outlet CO profile and reduced the CO emission level significantly.

Figure 12 shows CO, HC, and NO emission levels for Configuration E-1 without the film slot, with a comparative curve for CO with the film slot. The improvement in CO level with the film slot is evident. The data of Figure 12 were obtained at a firing rate of 50 lb/hr, and show that CO emission goals can be met when firing with 130 percent of stoichiometric air or more. HC and NO emissions, measured without the film slot, are also below emission goals over a wide operating range.

Data for Configuration E-2 were obtained in EGR studies and are presented in the section that follows.

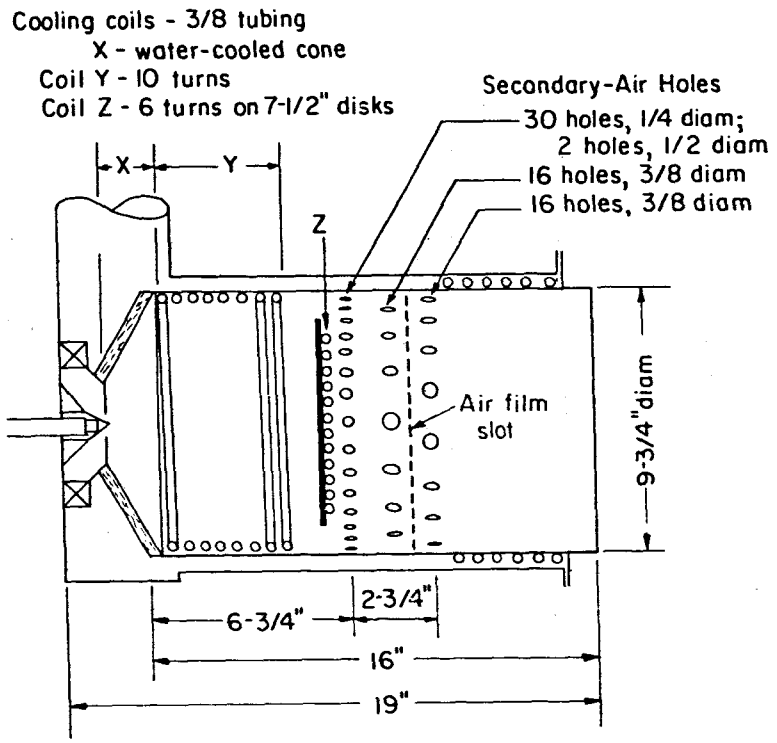

FIGURE 11. BURNER CONFIGURATION E

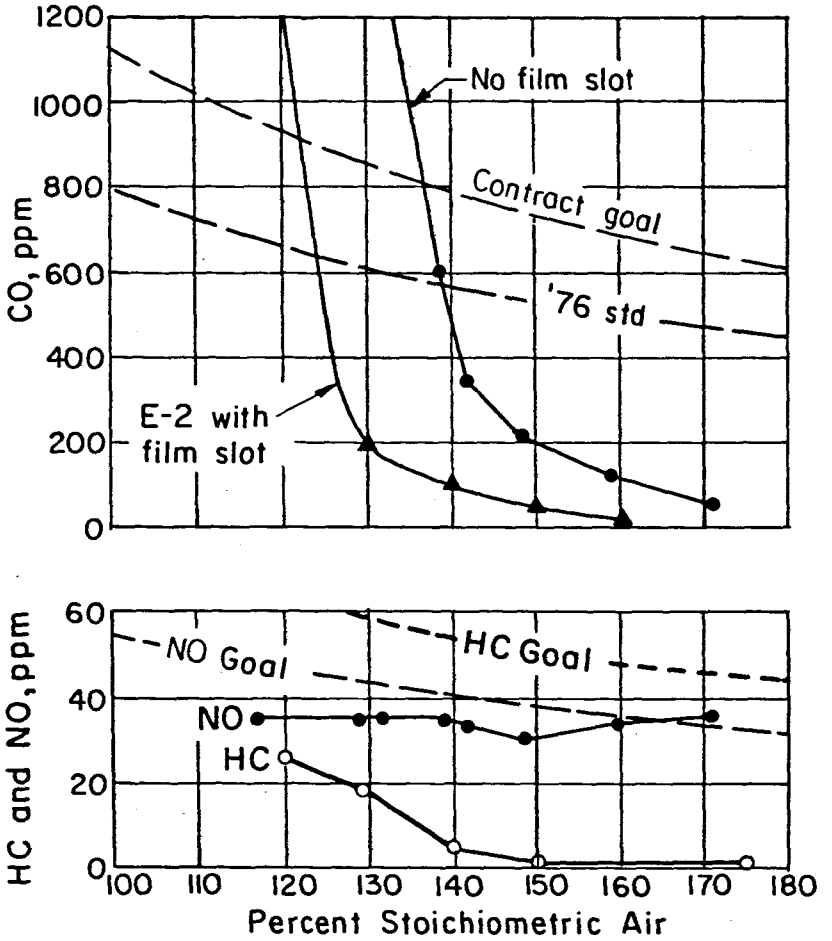

FIGURE 12. VARIATION OF CO, HC, AND NO WITH PERCENTAGE OF STOICHIOMETRIC AIR FOR CONFIGURATION E-1
Firing rate, 50 lb/hr

EXHAUST-GAS RECIRCULATION

Experimental Techniques

Exhaust-gas recirculation (EGR) is a recognized technique for reducing NO_x emission from combustion systems. The primary effect of EGR is to dilute the flame, with a resulting reduction in flame temperature. Secondary effects include the inhibiting effect of the recirculated moisture, and the reduction of peak flame temperatures for stoichiometric mixtures, which may occur in local regions. The overall effect is a significant reduction in NO_x emission.

EGR studies were carried out using a lean-primary burner (Configuration B) and a rich-primary burner (Configuration E), both cooled. The effects of EGR on both burner types were explored in 242 tests covering a range of air-fuel ratios, firing rates, and percentages of recirculation for each burner. All cooling surfaces in both of these burners were cooled in all tests.

Figure 13 shows schematically the arrangement of apparatus used for EGR studies, and Figure 14 is a photograph of the principal piping, with emission-measurement instruments in the background. Figure 15 shows the burner outlet, with the 3-inch recirculation pipe at the center, and an air-cooled, 12-point gas-sampling rake installed across the burner outlet.

The EGR studies were carried out using the apparatus shown in Figures 13, 14, and 15. The recirculated exhaust gas was drawn from the center of the burner outlet and passed through a stainless-steel, water-cooled pipe in which gas temperature was reduced to about 400 F. The time for gas flow through the cooled section at 110 lb fuel/hr was about 30 millisec, comparable to that for gas flow through a boiler. Both air flow and recirculated-gas flow were controlled by adjustment of dampers. Gas temperature was controlled by the number of water-cooled sections used; for low flow rates, only one or two sections were cooled.

The definition of "Percent EGR" used throughout this report is:

$$\text{Percent EGR} = \frac{\text{(recirculated gas)}}{\text{(recirculated gas) + (combustion air) + (fuel)}} \times 100$$

All quantities are in units of weight flow, lb per hr.

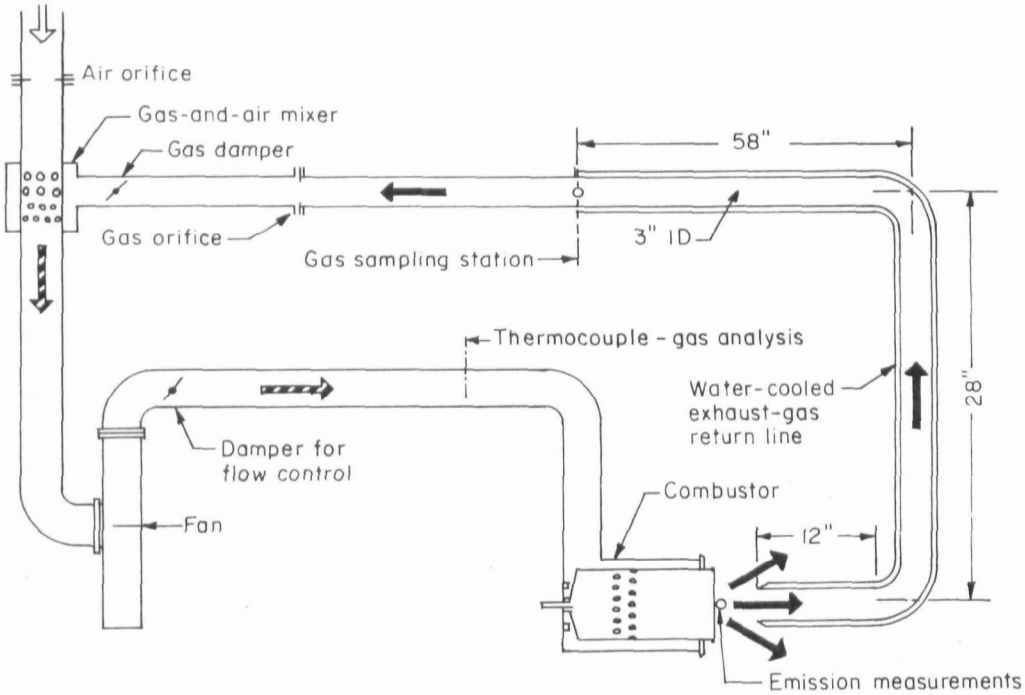

FIGURE 13. SCHEMATIC ARRANGEMENT OF APPARATUS FOR EGR STUDIES

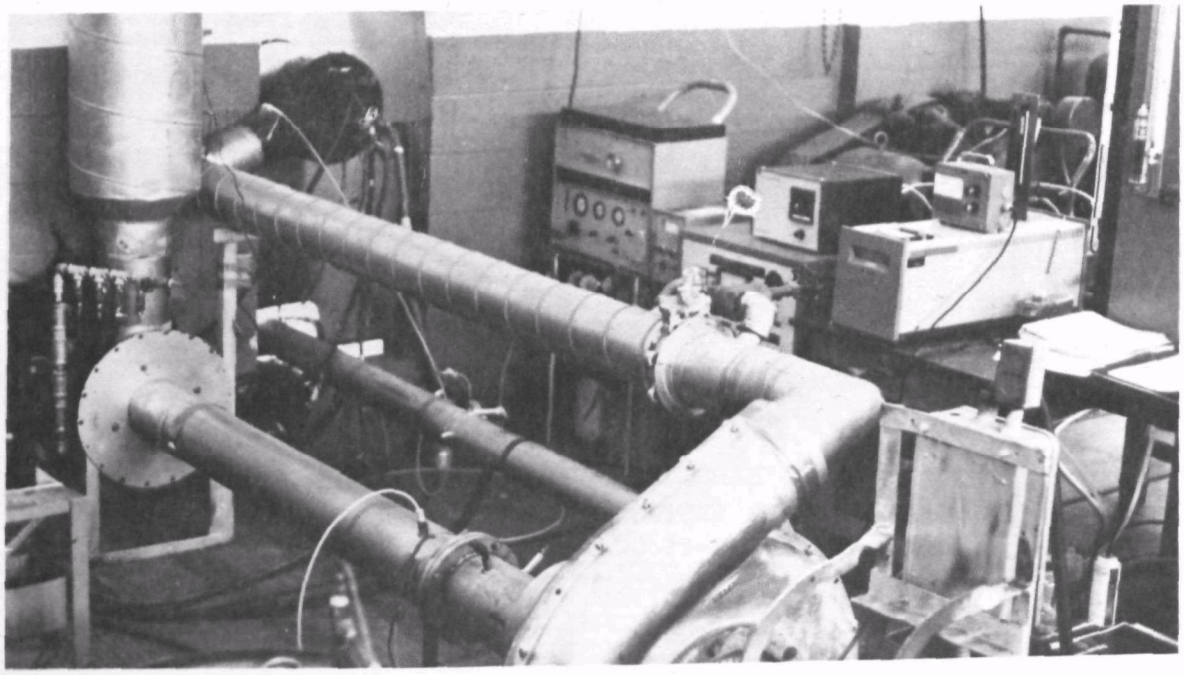

FIGURE 14. PHOTOGRAPH OF APPARATUS FOR EGR STUDIES

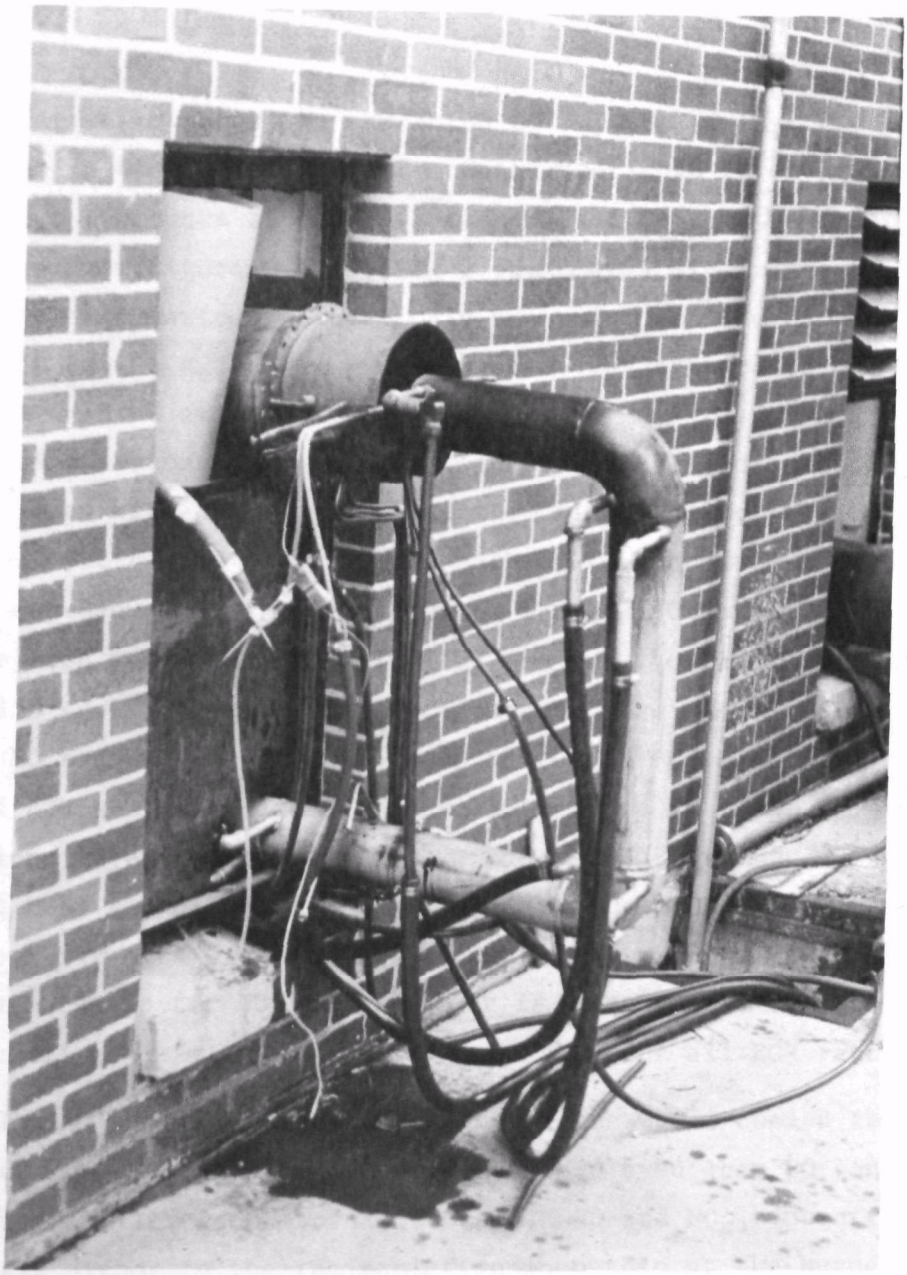

FIGURE 15. PHOTOGRAPH OF BURNER OUTLET SHOWING WATER-COOLED RECIRCULATION PIPE AND 12-POINT AIR-COOLED SAMPLING RAKE

Emission Data for Configuration B

Figure 16 shows the variation of HC, CO, NO, and NO_x with the percentage of stoichiometric air for Configuration B fired at 50 lb fuel/hr, and for various amounts of recirculated exhaust gas. HC emissions, at the top of the figure, were below 5 ppm over a wide range of air-fuel ratios and recirculation ratios. Only one point exceeded emission goals, and this was for an extremely rich mixture. EGR appears to have no significant effect on HC emissions.

CO emissions decrease with increasing air-fuel ratios, and are generally lower with EGR than without it. Almost all of the data points fall to the left of the curve shown on the data plot. In general, emission goals are met over the firing range from 130 to 170 percent of stoichiometric air, and CO levels are below 200 ppm for the leaner mixtures ranging from 150 to 170 percent of stoichiometric air.

NO and NO_x emissions, at the bottom of Figure 16, show very large effects of EGR and of excess air. At 150 percent of stoichiometric air, NO_x emissions levels exceed the goal without EGR, approach the goal with 10 percent EGR, and are well below the goal with 15 and 22 percent EGR. Although earlier data without EGR showed that Configuration B could not meet emission goals for NO_x, this burner is very responsive to EGR and could meet all goals with about 15 percent EGR for all EGR rates.

At the outlet of the cooled section of the water-cooled recirculation loop the CO concentration was always near zero even when CO concentrations at the burner outlet were above 2,000 ppm. NO and NO_x concentrations were consistently higher in the recirculation loop than at the burner outlet by a few ppm. With 700 ppm CO at the burner outlet, concentrations of NO and NO_x in the recirculation loop were 7 ppm and 1 ppm higher than at the burner outlet. With 2,000 or more ppm of CO at the burner outlet, NO and NO_x levels in the recirculation loop were 13 ppm and 6 ppm higher than at the burner outlet. Total NO_x levels for these tests ranged from 30 to 40 ppm. It is not known whether NO and NO_x are formed in the recirculation loop, or whether the CO in the sample from the burner outlet influences the NO and NO_x measurements made by the chemiluminescent analyzer.

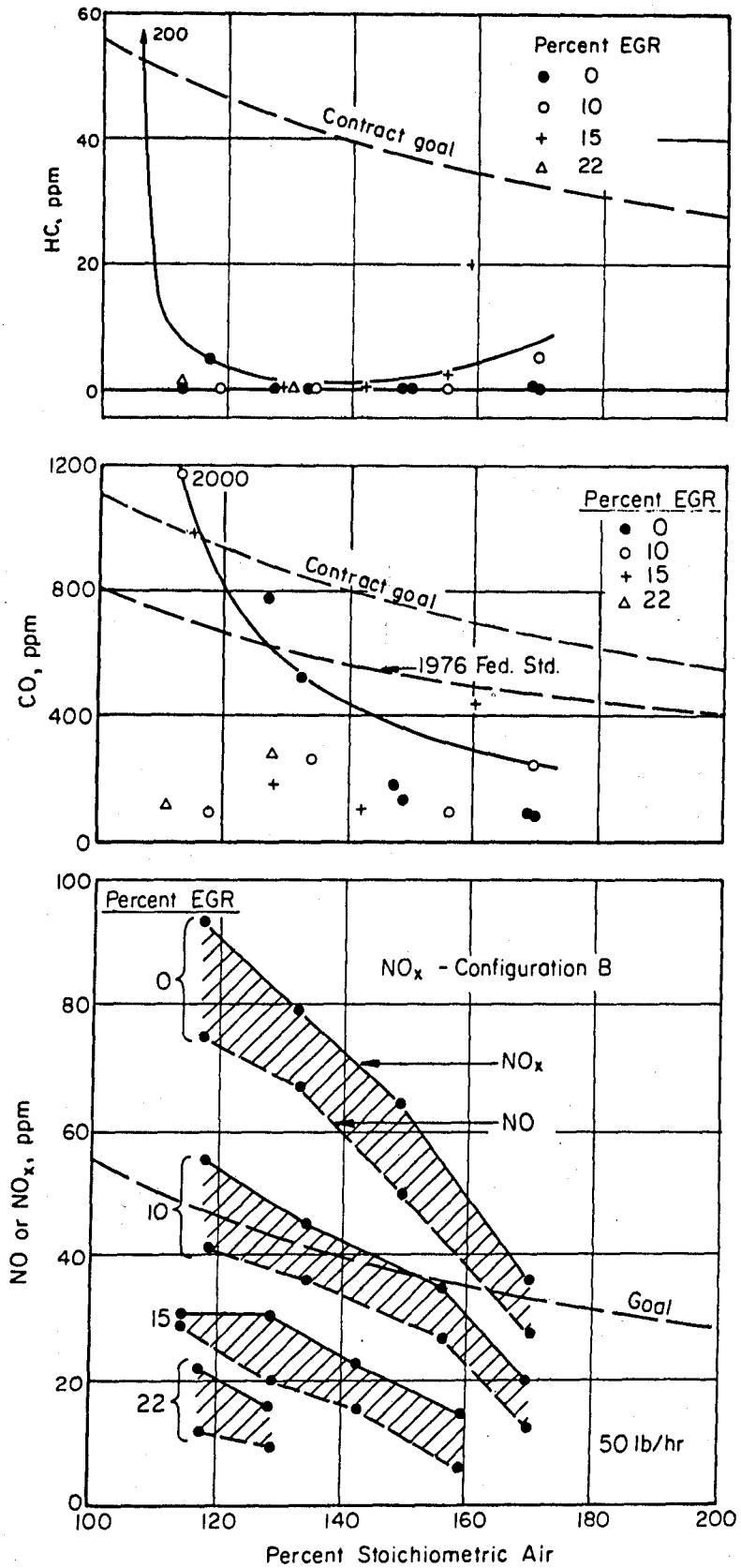

FIGURE 16. VARIATION OF HC, CO, NO, AND NO_x WITH PERCENTAGE OF STOICHIOMETRIC AIR FOR CONFIGURATION B
Firing rate, 50 lb/hr

An interesting aspect of the NO and NO_x data is that the concentration of NO_2 (the width of the shaded band between NO and NO_x curves) is about 10 ppm for any level of NO_x. Thus, the percentage of total NO_x as NO_2 varies from about 15 percent with 90 ppm of NO_x to 50 percent with 20 ppm of NO_x.

Figure 17 shows emission data for Configuration B expressed as Emission Index (g emissions per kg fuel), plotted against firing rate. All points in Figure 17 are for 145 to 155 percent of stoichiometric air except where noted by numbers beside points, which show the actual percent air.

HC emissions, at the top of the figure, are very low at the higher firing rates, but rise at rates of 20 lb/hr and less. However, all values are below the emission goal except two points, both with richer than optimum fuel-air ratios.

CO emissions are generally within goals, but three test points at low firing rates exceed them. In order to meet CO emission goals at the lower firing rates relatively lean mixtures, in the range of 150 to 200 percent of stoichiometric air, are required. No data for firing 110 lb fuel/hr with 150 percent of stoichiometric air were taken because of fan capacity limits. However, extrapolation of data for richer mixtures (plotted against percent of stoichiometric air) indicates a level of about 2 g/kg CO, falling below the curve shown.

NO_x emission levels, at the bottom of Figure 17, meet goals for firing rates of 20 to 110 lb/hr with 10 or 15 percent EGR. However, NO_x emission levels of about 2 g/kg exceed the goal for firing rates of 5 and 10 lb/hr.

From Figure 17 it is evident that a lean-primary cooled burner with 10 to 15 percent EGR, fired at 150 percent of stoichiometric air, can meet all emission goals except for NO_x emission at very low firing rates. At these lowest firing rates the HC and CO increase if air-fuel ratio is increased, so that there is no operating point where CO, HC, and NO_x emissions are all below the goals. The quantity of NO_x emitted at the low firing rates is probably small, however, as the emission index is only 36 percent above the goal.

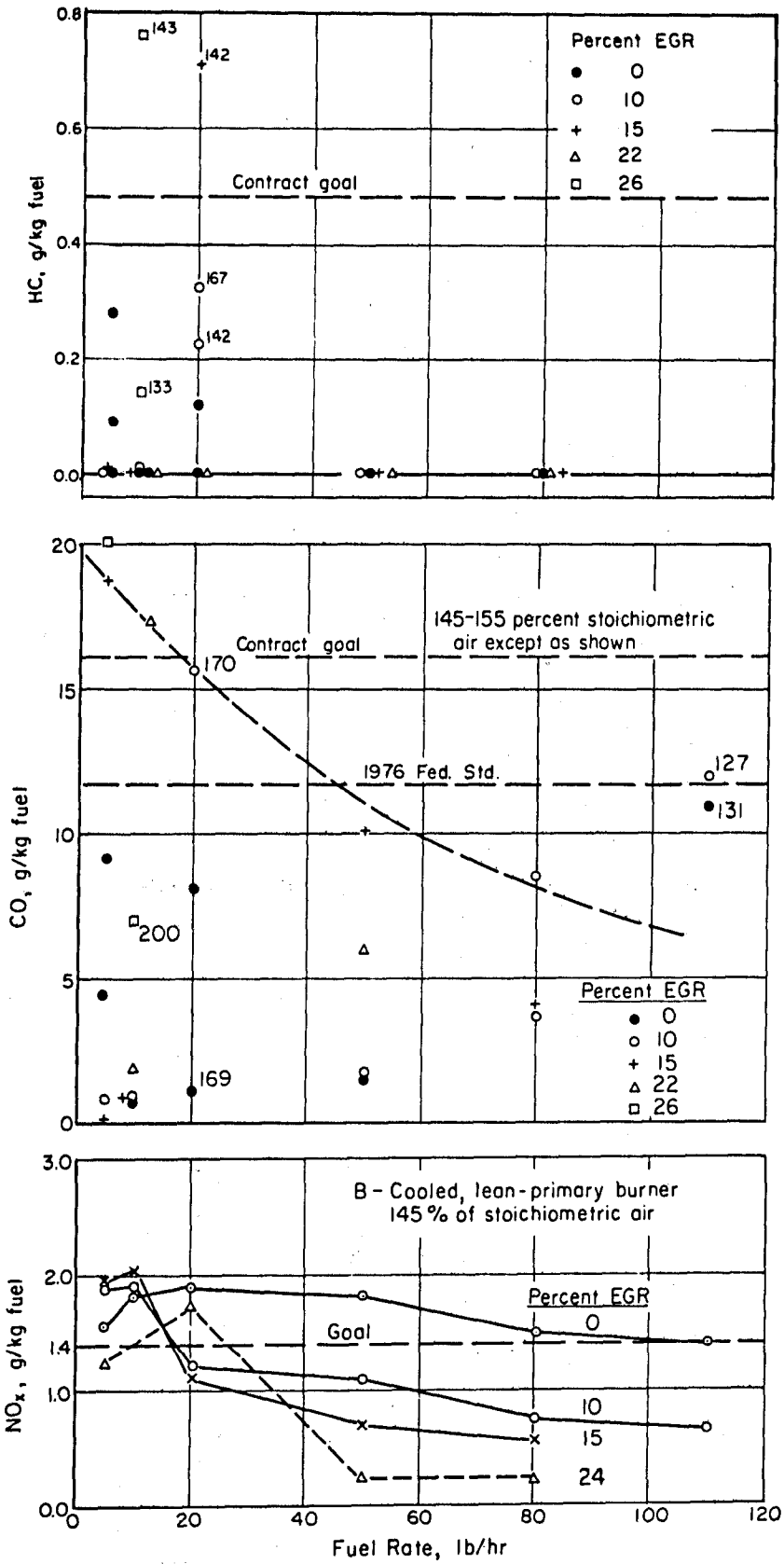

FIGURE 17. VARIATION OF EMISSION INDEX WITH FIRING RATE AND PERCENT OF EGR FOR CONFIGURATION B
Firing rate, 50 lb/hr

Emission Data For Configuration E-2

Configuration E-2 is the cooled, rich-primary burner shown in Figure 11. All of the data below were taken with the film-air slot installed.

Figure 18 shows the variation of HC, CO, NO, and NO_x with the percentage of stoichiometric air for Configuration E-2 fired at 50 lb fuel/hr, and for various percentages of EGR. HC emissions, at the top of Figure 18, were extremely low for all tests, and well within emission goals.

CO emission levels were very similar to those for the lean-primary burner, meeting goals with more than 130 percent of stoichiometric air, and falling to 200 ppm at 150 percent of stoichiometric air. The effect of EGR appeared negligible, and was less than that shown in Figure 16 for the lean-primary burner.

NO_x emissions varied both with EGR and with excess air. With no EGR the NO_x emission level straddled the goal curve over the range of excess air. On some days it was below the goal curve and on other days it exceeded the goals as shown, depending upon air humidity and other variables not clearly defined. However, with 16 percent EGR, the NO_x emission level was at approximately half of the emission goal, and increasing percentages of EGR resulted in further reductions of NO_x emission levels.

The difference between NO_x and NO values was measured at a nearly constant value of 10 ppm, representing 10 ppm of NO_2, as found in Figure 16. The NO curves are shown separately in Figure 18 because they intermingle with NO_2 curves and make it difficult to see the relation between NO_x level and percent of EGR.

From the data of Figure 18 it appears that Configuration E-2 meets emission goals when fired with 145 to 155 percent of stoichiometric air, and without EGR. EGR has no effect on HC or CO emissions, but reduces NO_x emission significantly. With about 15 percent EGR, NO_x emission levels would be about half the goal, and other emissions would be even less.

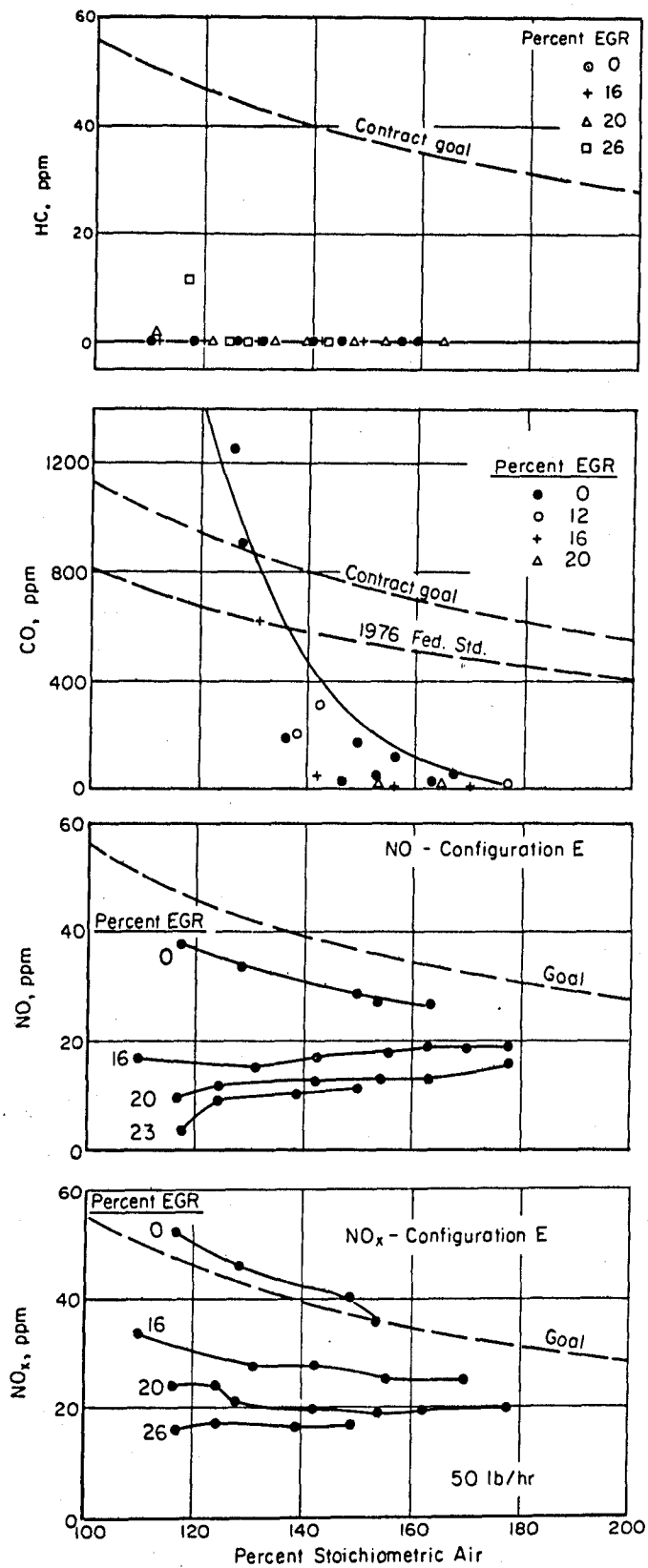

FIGURE 18. VARIATION OF HC, CO, NO, AND NO_x WITH PERCENTAGE OF EXCESS AIR AND PERCENT EGR FOR CONFIGURATION E-2
Firing rate, 50 lb/hr

Figure 19 shows emission data for Configuration E-2 expressed as g/kg fuel, plotted against firing rate. All points in Figure 17 are for 145 to 155 percent of stoichiometric air except where noted by numbers beside points, which show the actual percent air.

HC emissions are generally very low, at zero, except for four points at low firing rates. HC emissions should be well below emission goals for all firing conditions above 5 lb/hr, but it is necessary to use the optimum air-fuel ratio to avoid excessive HC emission levels at lower firing rates.

CO emissions are generally below 2 g/kg at firing rates above 20-lb fuel/hr, far below the contract goal of 16.25 g/kg or the 1976 standard of 11.8 g/kg. However, CO emissions rise rapidly to the range of 6 to 9 g/kg at 5 lb/hr, with one point at 16.5 g/kg for firing with 144 percent of stoichiometric air. It appears necessary to keep excess air above 60 percent at this firing rate to assure meeting CO emission goals, and there is a possibility of excessive CO emission at firing rates below 5 lb/hr, where flame shape is controlled by atomizing air and little can be done to influence emissions. CO emissions appear to be independent of the percent of EGR.

NO_x emission levels are all below the emission goal of 1.4 g/kg, with almost all points falling at or below 1 g/kg. The NO_x level is dependent upon the percentage of EGR, decreasing as the percentage of EGR is increased.

From Figure 19 it appears that Configuration E-2, the cooled, rich-primary burner, can meet all emission goals without EGR, and that further reduction in NO_x emission is obtained by use of EGR. It appears desireable to operate with about 150 percent of stoichiometric air over the range of 10 to 110 lb/fuel/hr, with somewhat higher air-fuel ratios at 5 lb/hr and less in order to meet CO and HC emission goals.

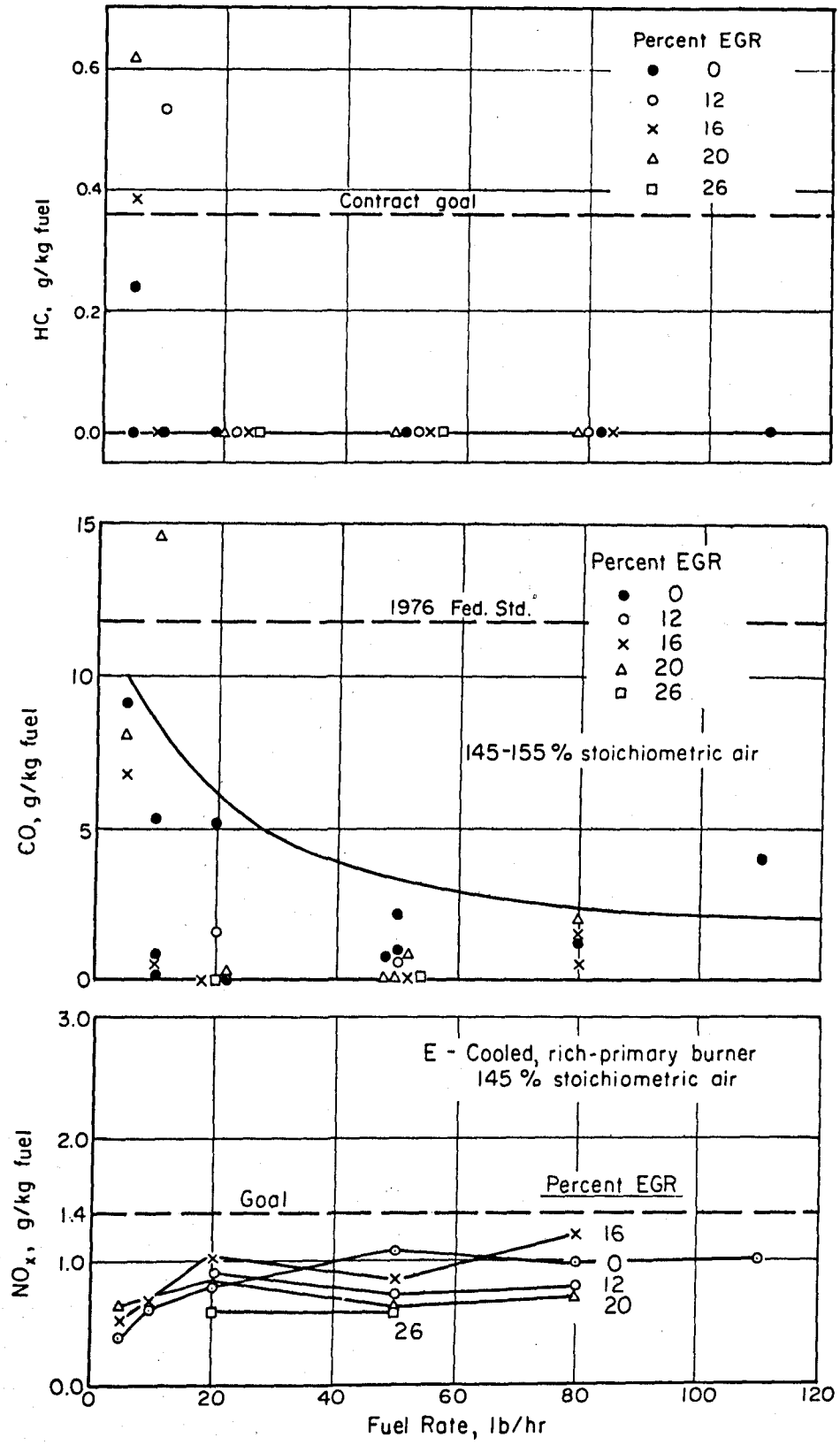

FIGURE 19. VARIATION OF EMISSION INDEX WITH FIRING RATE AND PERCENT EGR FOR CONFIGURATION E-2
Firing rate, 50 lb/hr

DISCUSSION OF THERMAL AND CHEMICAL ASPECTS OF EGR

EGR is extremely effective in reducing NO_x emissions, and has the thermodynamic advantage that it does not increase stack loss. Furthermore, data obtained during this program indicates that, pound for pound, exhaust gas is a more effective diluent than air in reducing NO_x emission. This is not true of all data; for example, the data for the Steam Engine Systems combustion system[2] indicate that exhaust gas and excess air can be interchanged with exactly the same results. The differences in data from the two sources, coupled with the differences in the combustion systems to which they apply, provide a unique insight into the mechanism through which EGR and air, as diluents reduce the emission of NO_x.

The data reported by SES applies to a premixed, vaporizing burner in which a homogenous mixture of gasoline vapor and air is burned in a ported burner much like a natural-gas burner. If the mixture is truly nomogeneous, all of the mixture passing through the flame front experiences the same time and temperature history, and peak temperature is controlled by the overall, or bulk fuel-air ratio. With this system, when diluent exhaust gas is premixed with the air and fuel, the effect on NO_x formation is approximately the same as that obtained by dilution with air, and good correlation of data can be obtained if NO_x emission is plotted against mass flow of air-plus-gas. This correlation is indicative that the effects of EGR in this system are almost entirely thermal in nature, and significant effects of gas composition are not evident.

The emission data for Configurations B and E are completely different, showing that exhaust gas is considerably more effective as a diluent than is air. When NO_x concentrations are plotted against total weight of air plus gas, distinctly different curves appear for each different level of exhaust gas recirculated. The percentage reduction of NO_x caused by introducing exhaust gas as a percentage of the air supplied is about the same at any level of air-fuel ratio, even though a considerably greater flow of exhaust gas is needed at high values

of excess air than at low values. Thus, the NO_x emission level correlates better with the oxygen content of the air-and-gas mixture entering the burner than with the mass flow, so that thermal capacity of the bulk mixture is not the most significant variable.

In contrast with the SES burner, in which fuel vapor and combustion air are completely premixed before burning, Configuration B and E are such that fuel atomization, droplet evaporation, and mixing with combustion air all take place within the combustion space, and significant gradients of fuel-air ratios are possible. For example, as a fuel drop evaporates, the fuel-air mixture at the drop surface may be richer than stoichiometric but, as the vapor diffuses away from the drop surface, the mixture becomes leaner, passing through stoichiometric and eventually reaching the bulk mixture conditions. Another source of fuel-air ratio gradients is flow eddies, in which local mixtures may vary from rich to lean, passing through stoichiometric at some surface in the eddy; these may be fixed eddies attached to a flameholder, or small eddies of fuel-and-air mixture passing through the burner. The exact form of the local regions in which mixture gradients occur is not obvious, but the general nature of the phenomena involved might be considered under the general concept of "unmixedness". The responsiveness of a burner to EGR, as against the responsiveness to excess air in reducing NO_x emission provides a unique and effective way of measuring the degree of unmixedness in a burner.

The physical explanation of the effect of unmixedness on NO_x emission is that, as the mixture ratio of fuel and air in a local region varies from rich to lean, temperature gradients corresponding to local mixture ratios are possible, with the peak temperature corresponding to the local mixture most closely approaching a stoichiometric mixture. NO_x production in these peak-temperature regions would be considerably greater than that at the average temperature for the overall mixture.

When unmixedness is considered in comparing flame dilution with exhaust gas with that for dilution with air, it is evident that dilution with air still permits local hot spots approaching the adiabatic flame temperature for a stoichiometric mixture. However, premixing of

combustion air with exhaust gas reduces the oxygen content, increasing the amount of inert diluent that must be heated in the local stoichiometric-mixture zone, thus reducing the highest local peak temperatures. This is reflected in lowering of NO_x concentration in the exhaust.

Another independent factor influencing the effectiveness of EGR is the water content of the recirculated gas. It is known that air humidity affects NO_x production to the extent that addition of one percent of moisture by weight to combustion air will reduce NO_x production by about 20 percent.[3] Considering that the exhaust gas normally contains about ten percent of moisture, recirculation of ten percent of the exhaust gas would add approximately 1 percent to the moisture in the combustion air, and this should reduce NO_x emission by about 20 percent.

EFFECT OF FUEL NITROGEN CONTENT ON NO_x EMISSION

In the course of burner development it was found that the percentage of chemically combined nitrogen in different lots of fuel varied considerably, and an influence of fuel nitrogen content upon NO_x emissions was suspected. This influence was explored by doping a low-nitrogen Jet-A Fuel with pyridine, C_5H_5N, to provide several levels of nitrogen content. (Only the chemically combined nitrogen in the fuel influences NO_x emissions, and dissolved nitrogen has no significant effect.)

In operating with doped fuel, Configuration E-1 was fired at a constant fuel rate of 50 lb/hr and the air flow was varied over a range from 120 to 175 percent of stoichiometric air. This provided a range of air-fuel mixtures in the primary zone varying from 60 to 85 percent of stoichiometric air; thus, the primary zone was fuel-rich under all firing conditions.

Figure 20 shows the variation of NO and NO_x emission levels with fuel nitrogen content and with the percentage of stoichiomentric air. It is evident from Figure 20 that NO_x emission increases significantly with increasing fuel nitrogen content. It also varies somewhat with percentage of stoichiometric air.

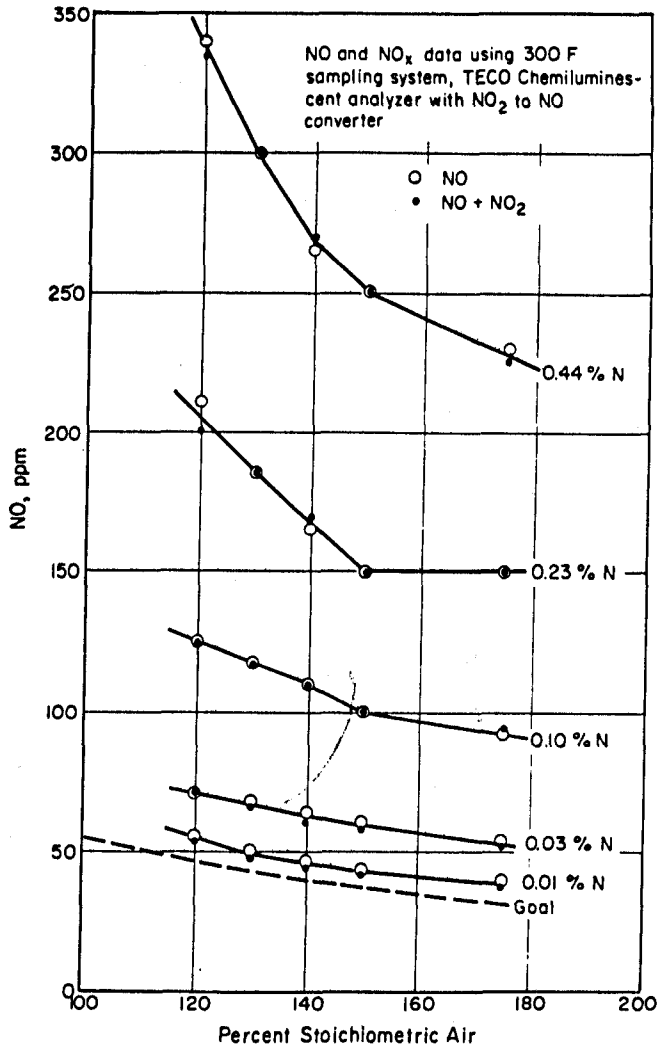

FIGURE 20. VARIATION OF NO AND NO_x EMISSION WITH FUEL NITROGEN CONTENT

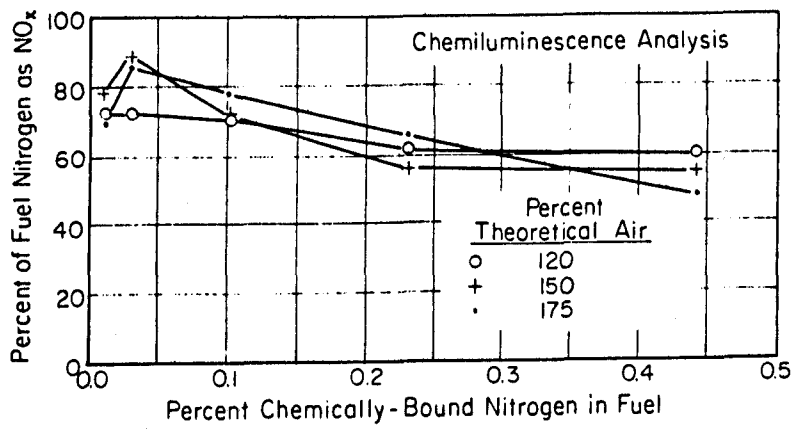

FIGURE 21. PERCENT OF FUEL NITROGEN CONVERTED TO NO_x AS FUNCTION OF FUEL NITROGEN CONTENT

The data of Figure 20 were taken using a 300 F air-cooled, 12 point sampling rake and a heated stainless-steel sample line to a TECO chemiluminescnece analyzer. The analyzer included a converter to convert NO_2 to NO, consisting of a 6-ft length of 1/8-in. stainless steel tubing heated to 1200 F NO was determined by by-passing the converter and NO_x was determined by passing the sample through it.

Approximately equal values for NO and NO_x are shown in Figure 20, indicating that NO_2 concentration is negligeable. The NO values measured previously with the NDIR analyzer were also similar. It is believed that the low NO_2 concentration reflects reduction of NO_2 to NO in the presence of high oxygen atom concentrations, as discussed later in this report.

If the NO formed by fixation of atmospheric nitrogen is subtracted from the total NO in the exhaust gas, the percentage of fuel nitrogen converted to NO can be calculated. Such a calculation is very sensitive to small errors in NO measurement when fuel nitrogen content is low, but it is possible to obtain consistent curves by careful selection of an NO value for zero fuel nitrogen.

Figure 21 shows the percent of fuel nitrogen converted to NO_x as a function of fuel nitrogen content and percentage of theoretical air. The conversion efficiencies shown range from about 90 percent for very small values of fuel nitrogen, to about 50 percent at the highest value of fuel nitrogen. These values are within the ranges reported by other experimentors.[4,5]

The organic nitrogen content of the undoped fuel was measured in samples taken from the fuel nozzle before each group of tests. Values of 0.003 and 0.01 percent were measured, equivalent to values of 30 and 100 ppm. These values are high for Jet A fuel and may reflect some system contamination.

ANALYTICAL PREDICTIONS OF HEAT TRANSFER AND NO_x GENERATION

Early in the development of the combustor a computer program was developed for study of local wall temperatures and heat-transfer rates, local gas temperatures, and levels of NO generated. With this analytical approach, excellent predictions of wall temperatures and heat-transfer rates were possible, but the predicted levels of NO generation were far lower than the levels measured experimentally. The difference is believed to be the result of high gas temperatures and high oxygen-atom concentrations within small local regions not treated adequately in the analysis.

The analytical method was based upon the Hottel and Cohen radiation analysis program [6,7], modified to allow for variable flame emissivity. This was considered essential in this study to show the effect of luminous portions of the flame occupying only a portion of the combustor, especially at the lower firing rates. The basic procedure in the Hottel and Cohen method involves dividing the combustion chamber into a number of gas zones of different temperatures surrounded by surface zones. The temperature of each gas zone is taken as the well-stirred temperature considering the flow into and out of the zone, the heat release within the zone, and the heat transfer by radiation and convection into and out of the zone. Radiation interchange is included from each surface to every other surface, from each surface to all gas zones, and from each gas zone to every other gas zone. The complexity of this radiation interchange problem plus the iterative nature of the heat balance solutions for each zone temperature requires the use of a high-speed computer for even a relatively small number of zones.

With this analytical approach, temperature distributions within gas zones, wall temperatures, and heat-transfer rates from gas zones and to walls, were carried out. In general, it was possible to predict quite well the metal wall temperatures, for example. However, the local gas temperatures computed were well-mixed, uniform temperatures for each zone, and these were based upon an assumed rate of heat release by combustion within each zone. The program did not provide a means for predicting peak gas temperatures in very small local regions, or to predict local combustion intensity.

The thermal program was combined with a kinetics program based upon Zeldovitch kinetics for NO production. The mean zone gas temperatures were such that the predicted levels of NO generation were much lower than the actual levels as measured experimentally, indicating a deficiency in this analytical approach.

The kinetics model assumed equilibrium oxygen-atom concentration, which, with zone temperature, determines NO generation. However, there is now considerable evidence that oxygen-atom concentrations in flame fronts may exceed equilibrium values by many times, and this may be one factor in the low values of NO predicted. Another contributing factor is the probability that much of the NO is formed in small local regions where reaction rates are high and local temperatures are well above the overall zone temperature used in the calculation.

It was found that the analytical approach used provides excellent prediction of local wall temperatures and heat-transfer rates, but that the local gas temperatures, especially in small local zones, may exceed the predicted temperatures for well-mixed zones. A different type of analytical approach seems necessary for these regions, which probably account for most of the NO produced. Recent experimental work has shown that NO levels similar to those found in the Rankine-cycle burner can be produced with reaction periods as short as 0.2 millisec[8] under appropriate conditions. The residence time in the Rankine-cycle burner is about 10 millisec at full firing rate, which is about 50 times the period needed for NO generation.

AUXILIARY POWER REQUIREMENTS

Contract goals included a limit of 2 hp for auxiliary power for burner operation. This power level is shaft power into fans and pumps and does not include electric motor or hydraulic drive inefficiency. Fan power is that for burner pressure drop only, and does not include an allowance for boiler pressure drop, which would increase the power required.

Table 2 summarizes auxiliary power requirements for Configuration E-2. Data were calculated for a fuel flow of 110 lb/hr (2,000,000 Btu/hr) and 140 percent of stoichiometric air, and the effect of two levels of EGR are included. Fan efficiency of 70 percent was assumed. Fuel-pump power is nominal and was assumed to be 0.1 hp, and atomizing-air compressor power is based upon compressor efficiency of 66 percent.

TABLE 2. SUMMARY OF AUXILIARY POWER REQUIREMENTS FOR CONFIGURATION E-2

	Shaft Horsepower Input		
	No EGR	10% EGR	17% EGR
Atomizing air compressor	0.5	0.5	0.5
Fuel pump	0.1	0.1	0.1
Combustion-air fan	0.94	1.38	1.56
Total auxiliary power	1.54	1.98	2.16

From Table 2 it can be seen that auxiliary power input for Configuration E-2 is within the 2-hp goal, and that up to 10 percent EGR can be used before this goal is exceeded. Configuration E-2 meets emission goals for CO, HC, and smoke without EGR, but is marginal in emission of NO_x. The use of 10 percent EGR would reduce NO_x to a value safely within emission goals without exceeding auxiliary power goals.

GAS SAMPLING AND ANALYSIS STUDY

Early in the program it had been observed that NO concentrations were lower than expected when CO concentrations were above 2,000 ppm. It was suspected that the high CO concentrations in the gas might be interfering with accurate NO determinations, or that CO and NO were reacting in the sampling system to destroy NO.

EGR studies offered a means of comparison of NO and NO_x data for gas samples taken simultaneously from two parts of the system. The samples taken from the burner outlet were often high in CO concentration, but the samples taken from the EGR loop contained no CO. The CO was burned to CO_2 in passing through the water-cooled EGR section, in which the residence time varied from a minimum of 30 millisec to more than one second, depending on firing rate and percentage of EGR.

Gas samples were taken from the burner outlet using a 12-point stainless steel rake, air cooled to 300 F. Samples from the EGR loop were taken at the downstream end of the water-cooled section, shown in Figure 13, where the gas temperature was 400 F or less, using an uncooled stainless steel probe at the centerline of the pipe. Sample lines to the chemiluminescence analyzer were heated to avoid water condensation.

Figure 22 shows the trends of NO and NO_x data for 64 tests, for samples from the burner outlet and the EGR loop. For Configuration B, the lean-primary burner, the NO concentration at the burner outlet was always lower than the NO_x concentration by about 10 ppm. However, NO concentration in the EGR loop was higher, approaching the NO_x value.

For Configuration E-2, the rich-primary burner, NO concentrations at the burner outlet were lower than NO_x there by about 5 ppm, and lower than the NO concentration in the EGR loop. The NO_x concentration was the same at the burner outlet and in the EGR loop.

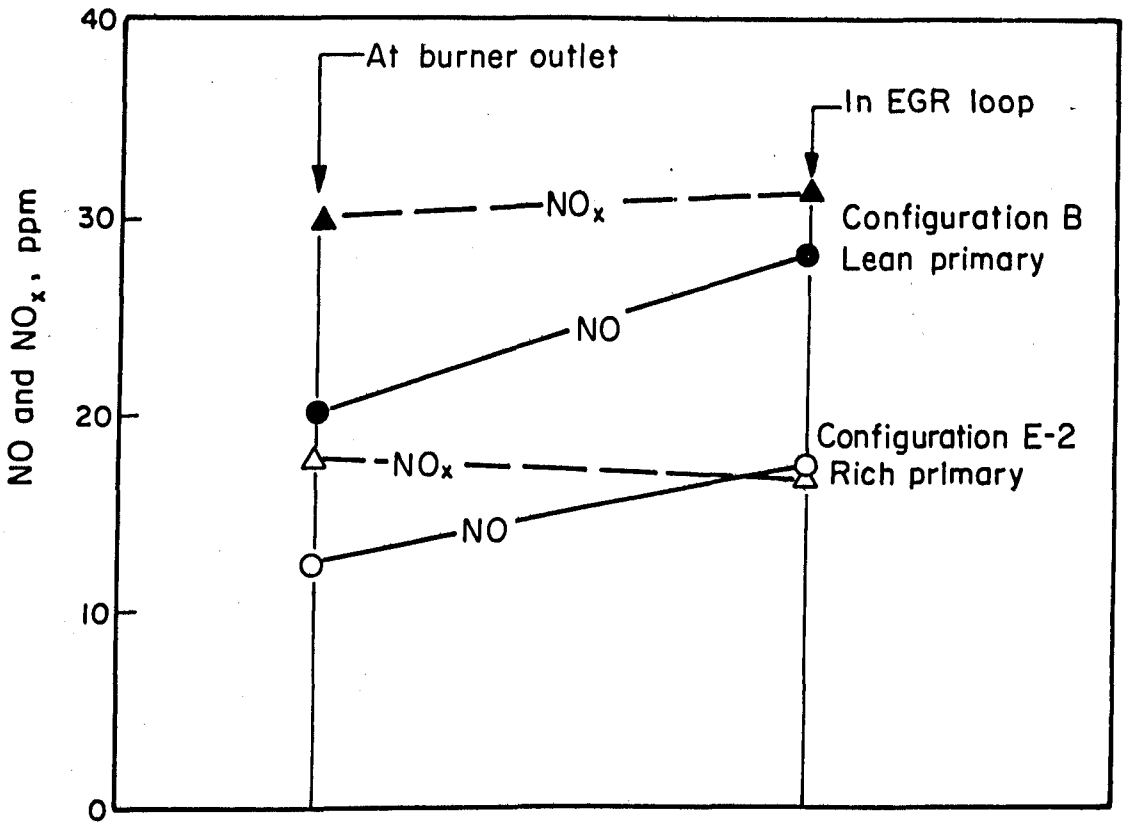

FIGURE 22. TRENDS OF NO AND NO_x DATA AT BURNER OUTLET AND IN EGR LOOP

Points are average data for 64 tests

The data plotted in Figure 22 suggest that the NO_2 entering the EGR loop is converted to NO in the loop, since the NO concentration increases and the total NO_x remains constant. It is believed that the following reaction takes place:

$$NO_2 + O \rightarrow NO + O_2.$$

Support for this reaction is provided by the results of unpublished research now in progress at Battelle-Columbus. The same type of reaction has been observed in bench-scale diffusion flames. In this research the oxygen-atom concentration at the end of the flame is measured and is high enough to promote this reaction.

The oxygen-atom reaction is insensitive to gas temperature and would take place equally well in a hot probe or a cold probe.

It was concluded that the variations in NO and NO_x concentrations in various parts of the system are characteristic of the system and do not represent sampling or measurement errors.

REFERENCES

(1) C. J. Halstead and A.J.E. Munro, "The Sampling, Analysis, and Study of the Nitrogen Oxides Formed in Natural Gas/Air Flames", Proc. Conf. on Natural Gas Research and Technology, Chicago, Illinois, February 28, 1971, sponsored by the American Gas Association and the Institute of Gas Technology.

(2) "Design and Development of an Automobile Propulsion System Utilizing a Rankine-Cycle Engine (Water Base Fluid)", Fourth Quarterly Progress Report, March 15, 1972, EPA Contract No. 68-04-0004, Mod 2, Steam Engine Systems Corporation.

(3) F. W. Lipfert, "Correlation of Gas Turbine Emission Data", ASME Paper No. 72-GT-60. Presented at ASME Gas Turbine Conference, March, 1972, San Francisco.

(4) D. W. Turner, R. L. Andrews, and C. W. Siegmund, "Influence of Combustion Modification and Fuel Nitrogen Content on Nitrogen Oxides Emissions from Fuel Oil Combustion", paper presented at AIChE Meeting of December 1 and 2, 1971, San Francisco.

(5) G. B. Martin and E. E. Berkau, "An Investigation of the Conversion of Various Fuel Nitrogen Compounds to Nitrogen Oxides in Oil Combustion", paper presented at AIChE National Meeting, Atlantic City, N.J., August 30, 1971.

(6) H. C. Hottel and E. S. Cohen, "Radiant Heat Exchange in a Gas-Filled Enclosure: Allowance for Nonuniformity of Gas Temperature", AIChE Journal, Vol 4, No. 1, March, 1958, pp 3-14.

(7) H. C. Hottel and A. F. Sarofim, "Radiative Transfer", McGraw-Hill, New York, 1967.

(8) Craig T. Bowman, "Investigation of Nitric Oxide Formation Kinetics in Combustion Processes: The Hydrogen-Oxygen-Nitrogen Reaction", Combustion Science and Technology, Vol 3, 37-45 (1971).

TECHNICAL REPORT DATA
(Please read Instructions on the reverse before completing)

1. REPORT NO. APTD-1516	2.	3. RECIPIENT'S ACCESSION NO.
4. TITLE AND SUBTITLE Low Emission Burners for Automotive Rankine Cycle Engines		5. REPORT DATE April 1973
		6. PERFORMING ORGANIZATION CODE
7. AUTHOR(S) H.R. Hazard, R.D. Fischer, and C. McComis		8. PERFORMING ORGANIZATION REPORT NO
9. PERFORMING ORGANIZATION NAME AND ADDRESS Battelle, Columbus Laboratories, 505 King Avenue, Columbus, Ohio 43201		10. PROGRAM ELEMENT NO.
		11. CONTRACT/GRANT NO. EHS 70-117
12. SPONSORING AGENCY NAME AND ADDRESS U.S. ENVIRONMENTAL PROTECTION AGENCY, Mobile Source Pollution Control Program, Advanced Automotive Power Systems Development Div., Ann Arbor, Michigan 48105		13. TYPE OF REPORT AND PERIOD COVERED
		14. SPONSORING AGENCY CODE
15. SUPPLEMENTARY NOTES		

16. ABSTRACT

report discusses the results of a combustion technology program. The objective of program was to develop a full-scale burner suitable for an automotive Rankine-le engine. The contract goals include a 100:1 turndown ratio with firing rates from ,000,000 Btu/hr to 20,000 Btu/hr, combustion volume of 1.3 ft^3 or less, and total mechanical power input to fans and compressors of 2 hp or less. The fan power was specified as that needed to overcome burner pressure drop, and does not include any additional power needed to overcome boiler pressure drop. Emission goals for the program were the 1980 AAPS Goals. In the course of the program burners based on four different burner concepts were developed and evaluated. Each of these was optimized by experimental development, and data for the optimum configurations are reported. Burner Configuration E-2, which met all contract requirements, was a rich-primary burner having internal cooling of the primary zone with boiler tubes. It could be operated over the firing range from 110 to 1 lb fuel per hour and met emission goals at all firing rates. The effect of EGR (Exhaust Gas Recirculation) on NO_x emission was explored on two configurations. It was found that EGR reduced NO_x emission significantly for both configurations.

KEY WORDS AND DOCUMENT ANALYSIS

a. DESCRIPTORS		b. IDENTIFIERS/OPEN ENDED TERMS	c. COSATI Field/Group
ollution	Oxides of nitrogen	Exhaust-gas recirculation	13B
Automotive engines	Analysis	Low emission burners	20M
Rankine cycle	Nitric oxide	Jet A kerosene fuel	21B
Exhaust emissions	Hydrocarbons	1980 AAPS goals	
velopment	Carbon monoxide		
les	Combustion chamber		
sampling			

17. DISTRIBUTION STATEMENT Unlimited	19. SECURITY CLASS *(This Report)*	21. NO. OF PAGES 47
	20. SECURITY CLASS *(This page)*	22. PRICE

EPA Form 2220-1 (9-73)

INSTRUCTIONS

1. **REPORT NUMBER**
Insert the EPA report number as it appears on the cover of the publication.

2. **LEAVE BLANK**

3. **RECIPIENTS ACCESSION NUMBER**
Reserved for use by each report recipient.

4. **TITLE AND SUBTITLE**
Title should indicate clearly and briefly the subject coverage of the report, and be displayed prominently. Set subtitle, if used, in smaller type or otherwise subordinate it to main title. When a report is prepared in more than one volume, repeat the primary title, add volume number and include subtitle for the specific title.

5. **REPORT DATE**
Each report shall carry a date indicating at least month and year. Indicate the basis on which it was selected *(e.g., date of issue, date of approval, date of preparation, etc.)*.

6. **PERFORMING ORGANIZATION CODE**
Leave blank.

7. **AUTHOR(S)**
Give name(s) in conventional order *(John R. Doe, J. Robert Doe, etc.)*. List author's affiliation if it differs from the performing organization.

8. **PERFORMING ORGANIZATION REPORT NUMBER**
Insert if performing organization wishes to assign this number.

9. **PERFORMING ORGANIZATION NAME AND ADDRESS**
Give name, street, city, state, and ZIP code. List no more than two levels of an organizational hirearchy.

10. **PROGRAM ELEMENT NUMBER**
Use the program element number under which the report was prepared. Subordinate numbers may be included in parentheses.

11. **CONTRACT/GRANT NUMBER**
Insert contract or grant number under which report was prepared.

12. **SPONSORING AGENCY NAME AND ADDRESS**
Include ZIP code.

13. **TYPE OF REPORT AND PERIOD COVERED**
Indicate interim final, etc., and if applicable, dates covered.

14. **SPONSORING AGENCY CODE**
Leave blank.

15. **SUPPLEMENTARY NOTES**
Enter information not included elsewhere but useful, such as: Prepared in cooperation with, Translation of, Presented at conference of, To be published in, Supersedes, Supplements, etc.

16. **ABSTRACT**
Include a brief *(200 words or less)* factual summary of the most significant information contained in the report. If the report contains a significant bibliography or literature survey, mention it here.

17. **KEY WORDS AND DOCUMENT ANALYSIS**
(a) DESCRIPTORS - Select from the Thesaurus of Engineering and Scientific Terms the proper authorized terms that identify the major concept of the research and are sufficiently specific and precise to be used as index entries for cataloging.

(b) IDENTIFIERS AND OPEN-ENDED TERMS - Use identifiers for project names, code names, equipment designators, etc. Use open-ended terms written in descriptor form for those subjects for which no descriptor exists.

(c) COSATI FIELD GROUP - Field and group assignments are to be taken from the 1965 COSATI Subject Category List. Since the majority of documents are multidisciplinary in nature, the Primary Field/Group assignment(s) will be specific discipline, area of human endeavor, or type of physical object. The application(s) will be cross-referenced with secondary Field/Group assignments that will follow the primary posting(s).

18. **DISTRIBUTION STATEMENT**
Denote releasability to the public or limitation for reasons other than security for example "Release Unlimited." Cite any availability to the public, with address and price.

19. & 20. **SECURITY CLASSIFICATION**
DO NOT submit classified reports to the National Technical Information service.

21. **NUMBER OF PAGES**
Insert the total number of pages, including this one and unnumbered pages, but exclude distribution list, if any.

22. **PRICE**
Insert the price set by the National Technical Information Service or the Government Printing Office, if known.

ENVIRONMENTAL PROTECTION AGENCY
Technical Publications Branch
Office of Administration
Research Triangle Park, N. C. 27711

OFFICIAL BUSINESS

EPA Library
T 14816

AND FEES PAID
ENVIRONMENTAL PROTECTION AGENCY
EPA - 335
THIRD CLASS BULK RATE

U.S.MAIL

If you do not desire to continue receiving this technical report series, please CHECK HERE ☐, tear off this label, and return it to the above address. Your name will then be promptly removed from the appropriate mailing list.