Air Pollution Training Institute
MD 20
Environmental Research Center
Research Triangle Park, NC 27711

EPA 450/2-83-001
January, 1983

Air

EPA

# APTI Course 474 Continuous Emission Monitoring

# Regulatory Documents

United States
Environmental Protection
Agency

Air Pollution Training Institute
MD 20
Environmental Research Center
Research Triangle Park, NC 27711

EPA 450/2-83-001
January, 1983

Air

# APTI Course 474 Continuous Emission Monitoring

# Regulatory Documents

**Edited by:**
**James A. Jahnke, Ph.D.**

**Northrop Services, Inc.**
**P.O. Box 12313**
**Research Triangle Park, NC 27709**

Under EPA Contract No.
68-02-2374
EPA Project Officer
R. E. Townsend

United States Environmental Protection Agency
Office of Air, Noise and Radiation
Office of Air Quality Planning and Standards
Research Triangle Park, NC 27711

# Notice

This is not an official policy and standards document. The opinions and selections are those of the authors and not necessarily those of the Environmental Protection Agency. Every attempt has been made to represent the present state of the art as well as subject areas still under evaluation. Any mention of products or organizations does not constitute endorsement by the United States Environmental Protection Agency.

# Availability

This document is issued by the Manpower and Technical Information Branch, Control Programs Development Division, Office of Air Quality Planning and Standards, USEPA. It was developed for use in training courses presented by the EPA Air Pollution Training Institute and others receiving contractual or grant support from the Institute. Other organizations are welcome to use the document.

If these materials are adapted or abstracted, it is requested that professional courtesy be shown through proper citations to this document.

This publication is available, free of charge, to schools or governmental air pollution control agencies intending to conduct a training course on the subject covered. Submit a written request to the Air Pollution Training Institute, USEPA, MD 20, Research Triangle Park, NC 27711.

Others may obtain copies, for a fee, from the National Technical Information Service (NTIS), 5825 Port Royal Road, Springfield, VA 22161.

# Preface

This document is a compendium of regulatory announcements and promulgations dealing with continuous source-emission monitoring. We have attempted to include most of the pertinent *Federal Register* announcements (from October 6, 1975 to December 1, 1982) dealing with this subject. A number of the *Proposed Rules* and *Advanced Notices of Proposed Rulemaking* that are included here have not as yet been, or will not be, promulgated as final rules. They are incorporated here because they indicate trends in agency policy and, in many cases, provide technical approaches that would be difficult to find without specific knowledge of *Federal Register* publication dates.

Starting from the October 6, 1975 *Federal Register* announcement of continuous-monitoring regulations, all entries follow chronologically in this publication.

# Table of Contents


| | Page |
|---|---|
| Regulations for the Continuous Monitoring of Source Emissions | 1 |
| Section I—Selected Information on New Source Performance Standards | 15 |
| A. Federal Standards of Performance for New Stationary Sources of Air Pollution | 17 |
| B. Summary of Proposal and Promulgation Dates for NSPS Source Categories | 26 |
| C. Selections from the *Code of Federal Regulations* | 27 |
| 1. Sections 40 CFR 60.5 to 40 CFR 60.14 | 27 |
| 2. Subpart G—Standards of Performance for Nitric Acid Plants | 32 |
| 3. Subpart H—Standards of Performance for Sulfuric Acid Plants | 33 |
| 4. Subpart P—Standards of Performance for Primary Copper Smelters | 34 |
| 5. Subpart Q—Standards of Performance for Primary Zinc Smelters | 36 |
| 6. Subpart R—Standards of Performance for Primary Lead Smelters | 37 |
| 7. Method 20—Determination of Nitrogen Oxides, Sulfur Dioxide, and Oxygen Emissions from Stationary Gas Turbines | 39 |
| Section II—Selected Excerpts from the *Federal Register* | 47 |
| 1. October 6, 1975—40 FR 46240 Requirements for Submittal of Implementation Plans—Standards for New Stationary Sources—Emission Monitoring | 49 |
| 2. October 12, 1976—41 FR 44838 Emission Monitoring Requirements—Receipt of Application and Approval of Alternative Monitoring Requirements | 83 |
| 3. January 31, 1977—42 FR 5936 Revisions to Emission Monitoring Requirements and to Reference Methods | 87 |
| 4. May 23, 1977—42 FR 26205 Compliance with Standards and Maintenance Requirements | 90 |
| 5. December 5, 1977—42 FR 61537 Opacity Provisions for Fossil-Fuel-Fired Steam Generators—Revision of Format and Reporting Requirements | 91 |
| 6. May 31, 1979—44 FR 31514 Polychlorinated Biphenyls (PCBs) Manufacturing, Processing, Distribution in Commerce, and Use Prohibitions (Selected Sections—Monitoring Disposal by Incineration) | 93 |
| 7. June 11, 1979—44 FR 33580 New Stationary Source Performance Standards; Electric Utility Steam Generating Units (Subpart Da Promulgation) | 101 |

8. June 29, 1979—44 FR 37960 Adjustment of Opacity Standard for Fossil-Fuel-Fired Steam Generator (Southwestern Public Service Co.—Harrington Station, Proposed Rule) ..... 147
9. August 8, 1979—44 FR 46481 Emission Monitoring of Stationary Sources—Advanced Notice of Proposed Rulemaking ..... 148
10. September 20, 1979—44 FR 54507 Proposed Approval of an Administrative Order Issued by the South Carolina Department of Health and Environmental Control to the U.S. Department of Energy. Savannah River Operations Office .. 149
11. September 27, 1979—44 FR 55651 Montana Power Co., Colstrip Units No. 3 and No. 4; Approval of PSD Permit ... 151
12. October 10, 1979—44 FR 58602 Continuous Monitoring Performance Specifications (Proposed Revisions—Specification Tests 1, 2, and 3) ..... 153
13. October 22, 1979—44 FR 60760 Standards of Performance for New Stationary Sources: Petroleum Refineries; Review of Standards ..... 189
14. October 22, 1979—44 FR 60761 Standards of Performance for New Stationary Sources: Portland Cement Plants; Review of Standards ..... 190
15. December 4, 1979—44 FR 69683 Approval and Promulgation of Implementation Plans; Florida: Variance for Particulates, $SO_2$, Visible Emissions and Excess Emissions for Florida Power and Light Generating Plants ..... 192
16. December 28, 1979—44 FR 76786 Adjustment of the Opacity Standard for a Fossil-Fuel-Fired Steam Generator (Southwestern Public Service Co.—Harrington Station, Final Rule) ... 193
17. February 4, 1980—45 FR 7762 Standards of Performance for New Stationary Sources; Ammonium Sulfate Manufacture—Selection of Monitoring Requirements ..... 194
18. February 6, 1980—45 FR 8230 Standards of Performance for New Stationary Sources for Electric Utility Steam Generating Units; Decision in Response to Petitions for Reconsideration (Excerpts) ..... 195
19. February 14, 1980—45 FR 9994 Regulation of Large Coal-Fired Boilers for $SO_2$ Emissions (Statistical Model) ..... 200
20. February 20, 1980—45 FR 11444 Continuous Monitoring Performance Specifications—Advanced Notice of Proposed Rulemaking (Performance Specification Test 4, CO Monitoring Systems) ..... 203
21. June 4, 1980—45 FR 37729 Amended Permit Determination to Indianapolis Power and Light, Patriot, Ind. . 207
22. June 13, 1980—45 FR 40169 Approval and Promulgation of Implementation Plans; Utah $SO_2$ Control Strategy (Kennecott Copper Corp.) ..... 210

23. June 19, 1980—45 FR 41415 Energy Related Authority; Delayed Compliance Order for the Virginia Electric and Power Company's Portsmouth Generating Station . . . . . 214
24. November 12, 1980—45 FR 74737 Georgia Plan Revision Relating to Georgia Power Plant Harlee Branch; Approval and Promulgation of Implementation Plans . . . . . 217
25. January 8, 1981—46 FR 2186 Collection of $SO_2$ Emissions Data from Certain Coal-Fired Utility Steam Generating Units. . 218
26. January 26, 1981—46 FR 8352 Revisions to General Provisions and Additions to Appendix A, and Reproposal of Revisions to Appendix B . . . . . 223
27. July 20, 1981—46 FR 37287 Continuous Monitoring Performance Specifications; Proposed Revisions to General Provisions (Advanced Notice of Proposed Rulemaking—Performance Specification Test 5—Total Reduced Sulfur-TRS). . . 236
28. October 28, 1981—46 FR 53144 Alternate Method 1 to Reference Method 9 of Appendix A—Determination of the Opacity of Emissions from Stationary Sources Remotely by Lidar; Addition of Alternate Method . . . . . 239
29. December 1, 1982—47 FR 54073 Methods 6A and 6B for the Determination of $SO_2$, Moisture, and $CO_2$ Emissions from Fossil Fuel Combustion Sources . . . . . 257

# Regulations for the Continuous Monitoring of Source Emissions

## Introduction

### *The Federal Register and Code of Federal Regulations*

Basically, there are two publications of which agency or industrial personnel involved with monitoring systems should be aware: the *Federal Register* (FR) and the *Code of Federal Regulations* (CFR). An issue of the *Federal Register* is published every working day. It presents proposed and promulgated regulations, amendments to previously promulgated regulations, meeting announcements, and other announcements for all agencies of the Federal government. The *Code of Federal Regulations*, published only once a year, is essentially a compilation of all of the promulgated regulations and amendments published that year in the *Federal Register* by the executive departments and the agencies of the Federal government. If an amendment to a paragraph of a promulgated regulation was published in the FR, the new CFR would strike out the old paragraph of the regulation and put in the amended version. The CFR is kept up to date by the individual issues of the *Federal Register*. The two publications must be used together to determine the latest version of any given rule.

The CFR is divided into 50 titles, each concerning some area of interest. For example, Title 14 deals with Aeronautics and Space and covers announcements and rules made by the Federal Aviation Administration, the Civil Aeronautics Board, and NASA. The title that concerns us is Title 40, which covers the Environmental Protection Agency, the Low-Emission Vehicle Certification Board, and the Council on Environmental Quality. We will deal with those regulations proposed and promulgated by EPA, which come under Chapter I of Title 40.

Chapter I of Title 40 is divided in the following manner:

- Title 40 — Protection of the Environment
  - Chapter I — EPA
    - Subchapters (A — Q)
      - Parts (0 — 799)
        - Subparts (A — TT)
          - Sections (Part No. + Decimal)
        - Appendices (A — Z)

It can be seen from this division that the Subchapters extend from A through Q and the Parts, from 0 through 799. The numbering of the "Parts" extends through the Subchapters (i.e., Subchapter B ends with Part 49 and Subchapter C begins with Part 50). Many of the Subchapters and Parts have been "reserved"; they have not yet been assigned to a specific regulatory area. This is meant to provide room for expansion within the format of the existing CFR.

In the CFR organizational scheme, Subchapter C deals with Air Programs, the main area of interest here. Subchapter C includes Parts 50 through 89, as shown below.

**Title 40 Subchapter C—Air Programs**

| Part | |
|---|---|
| 50 | National primary and secondary ambient air quality standards |
| 51 | Requirements for preparation, adoption, and submittal of implementation plans |
| 52 | Approval and promulgation of implementation plans |
| 53 | Ambient air monitoring references and equivalent methods |
| 54 | Prior notice of citizen suits |
| 55 | Energy-related authority |
| 60 | Standards of performance for new stationary sources |
| 61 | National emission standards for hazardous air pollutants |
| 79 | Registration of fuels and fuel additives |
| 80 | Regulation of fuels and fuel additives |
| 81 | Air quality control regions, criteria, and control techniques |
| 85 | Control of air pollution from new motor vehicles and new motor vehicle engines |
| 86 | Control of air pollution from new motor vehicles and new motor vehicle engines: certification and test procedures |
| 87 | Control of air pollution from aircraft and aircraft engines |
| 88-89 | (Reserved) |

The Parts, which are numbered, are further divided into Subparts, as is shown below. In Part 60 (of Title 40), which applies to the New Source Performance Standards, the Subparts currently are labeled from A through Z and from AA through TT. Each Subpart after Subpart C refers to the regulations that apply to a specific industry. For example, Subpart G applies to Portland Cement Plants, and Subpart H applies to sulfuric acid plants.

**Title 40 Part 60 CFR Subparts***

Subpart A—General Provisions

Subpart B—Adoption and Submittal of State Plans for Designated Facilities

Subpart C—Emission Guidelines and Compliance Times

Subpart D—Fossil-fuel fired Steam Generators

Subpart Da—Electric Utility Steam Generating Units

Subpart E—Incinerators

Subpart F—Portland Cement Plants

Subpart G—Nitric Acid Plants

Subpart H—Sulfuric Acid Plants

Subpart I—Asphalt Concrete Plants

Subpart J—Petroleum Refineries

Subpart K—Storage Vessels for Petroleum Liquids

Subpart L—Secondary Lead Smelters

Subpart M—Secondary Brass and Bronze Ingot Production Plants

Subpart N—Iron and Steel Plants

Subpart O—Sewage Treatment Plants

Subpart P—Primary Copper Smelters

Subpart Q—Primary Zinc Smelters

Subpart R—Primary Lead Smelters

Subpart S—Primary Aluminum Reduction Plants

Subpart T—Phosphate Fertilizer Industry: Wet Process Phosphoric Acid Plants

Subpart U—Phosphate Fertilizer Industry: Superphosphoric Acid Plants

Subpart V—Phosphate Fertilizer Industry: Diammonium Phosphate Plants

Subpart W—Phosphate Fertilizer Industry: Triple Superphosphate Plants

Subpart X—Phosphate Fertilizer Industry: Granular Triple Superphosphate Storage Facilities

Subpart Y—Coal Preparation Plants

Subpart Z—Ferroalloy Production Facilities

Subpart AA—Steel Plants: Electric Arc Furnaces

Subpart BB—Kraft Pulp Mills

Subpart CC—Glass Manufacturing Plants

Subpart DD—Grain Elevators

Subpart EE—Surface Coating of Metal Furniture

Subpart GG—Gas Turbines

Subpart HH—Lime Manufacturing Plants

Subpart MM—Automobile and Light Duty Truck Surface Coating Operations

Subpart PP—Ammonium Sulfate Manufacturing

Subpart SS—Industrial Surface Coating: Large Appliances

Subpart TT—Metal Coil Surface Coating

*Updated to January 1, 1983.

Each Section number begins with the Part number under which it falls. Decimal notation is then used to complete the number. For example, under Subpart A—General Provisions—the discussion of "Monitoring Requirements" for new stationary sources comes under Section 60.13.

## Sections of the Subparts of Part 60*



### PART 60—STANDARDS OF PERFORMANCE FOR NEW STATIONARY SOURCES

#### Subpart A—General Provisions

Sec.
60.1 Applicability.
60.2 Definitions.
60.3 Units and abbreviations.
60.4 Address.
60.5 Determination of construction or modification.
60.6 Review of plans.
60.7 Notification and record keeping.
60.8 Performance tests.
60.9 Availability of information.
60.10 State authority.
60.11 Compliance with standards and maintenance requirements.
60.12 Circumvention
60.13 Monitoring requirements.
60.14 Modification.
60.15 Reconstruction.
60.16 Priority list.

#### Subpart B—Adoption and Submittal of State Plans for Designated Facilities

60.20 Applicability
60.21 Definitions.
60.22 Publication of guideline documents, emission guidelines, and final compliance times.
60.23 Adoption and submittal of State plans; public hearings.
60.24 Emission standards and compliance schedules.
60.25 Emission inventories, source surveillance, reports.
60.26 Legal authority.
60.27 Actions by the Administrator.
60.28 Plan revisions by the State.
60.29 Plan revisions by the Administrator.

#### Subpart C—Emission Guidelines and Compliance Times

60.30 Scope.
60.31 Definitions.
60.32 Designated facilities.
60.33 Emission guidelines.
60.34 Compliance times.

#### Subpart D—Standards of Performance for Fossil-Fuel Fired Steam Generators for Which Construction is Commenced After August 17, 1971

60.40 Applicability and designation of affected facility
Sec.
60.41 Definitions.
60.42 Standard for particulate matter.
60.43 Standard for sulfur dioxide.
60.44 Standard for nitrogen oxides.
60.45 Emission and fuel monitoring.
60.46 Test methods and procedures.

#### Subpart Da—Standards of Performance for Electric Utility Steam Generating Units for Which Construction Is Commenced After September 18,1978

60.40a Applicability and designation of affected facility.
60.41a Definitions.
60.42a Standard for particulate matter.
60.43a Standard for sulfur dioxide.
60.44a Standard for nitrogen oxides.
60.45a Commercial demonstration permit.
60.46a Compliance provisions.
60.47a Emission monitoring.
60.48a Compliance determination procedures and methods.
60.49a Reporting requirements.

#### Subpart E—Standards of Performance for Incinerators

60.50 Applicability and designation of affected facility.
60.51 Definitions.
60.52 Standard for particulate matter.
60.53 Monitoring of operations.
60.54 Test methods and procedures.

#### Subpart F—Standards of Performance for Portland Cement Plants

60.60 Applicability and designation of affected facility.
60.61 Definitions.
60.62 Standard for particulate matter.
60.63 Monitoring of operations.
60.64 Test methods and procedures.

#### Subpart G—Standards of Performance for Nitric Acid Plants

60.70 Applicability and designation of affected facility.
60.71 Definitions.
60.72 Standard for nitrogen oxides.
60.73 Emission monitoring.
60.74 Test methods and procedures.

#### Subpart H—Standards of Performance for Sulfuric Acid Plants

60.80 Applicability and designation of affected facility.
60.81 Definitions.
60.82 Standard for sulfur dioxide.

*Taken from *Code of Federal Regulations* Title 40 Parts 53 to 80. Revised as of July 1, 1981.

Sec.
60.83 Standard for acid mist.
60.84 Emission monitoring.
60.85 Test methods and procedures.

**Subpart I—Standards of Performance for Asphalt Concrete Plants**

60.90 Applicability and designation of affected facility.
60.91 Definitions.
60.92 Standard for particulate matter.
60.93 Test methods and procedures.

**Subpart J—Standards of Performance for Petroleum Refineries**

60.100 Applicability and designation of affected facility.
60.101 Definitions.
60.102 Standard for particulate matter.
60.103 Standard for carbon monoxide.
60.104 Standard for sulfur dioxide.
60.105 Emission monitoring.
60.106 Test methods and procedures.

**Subpart K—Standards of Performance for Storage Vessels for Petroleum Liquids Constructed after June 11, 1973 and Prior to May 19, 1978**

60.110 Applicability and designation of affected facility.
60.111 Definitions.
60.112 Standard for volatile organic compounds (VOC).
60.113 Monitoring of operations.

**Subpart Ka—Standards of Performance for Storage Vessels for Petroleum Liquids Constructed After May 18, 1978**

60.110a Applicability and designation of affected facility.
60.111a Definitions.
60.112a Standard for volatile organic compounds (VOC).
60.113a Testing and procedures.
60.114a Equivalent equipment and procedures.
60.115a Monitoring of operations

**Subpart L—Standards of Performance for Secondary Lead Smelters**

60.120 Applicability and designation of affected facility.
60.121 Definitions.
60.122 Standard for particulate matter.
60.123 Test methods and procedures.

**Subpart M—Standards of Performance for Secondary Brass and Bronze Ingot Production Plants**

Sec.
60.130 Applicability and designation of affected facility.
60.131 Definitions.
60.132 Standard for particulate matter.
60.133 Test methods and procedures.

**Subpart N—Standards of Performance for Iron and Steel Plants**

60.140 Applicability and designation of affected facility.
60.141 Definitions.
60.142 Standard for particulate matter.
60.143 Monitoring of operations
60.144 Test methods and procedures.

**Subpart O—Standards of Performance for Sewage Treatment Plants**

60.150 Applicability and designation of affected facility.
60.151 Definitions.
60.152 Standard for particulate matter.
60.153 Monitoring of operations.
60.154 Test methods and procedures.

**Subpart P—Standards of Performance for Primary Copper Smelters**

60.160 Applicability and designation of affected facility.
60.161 Definitions.
60.162 Standard for particulate matter.
60.163 Standard for sulfur dioxide.
60.164 Standard for visible emissions.
60.165 Monitoring of operations.
60.166 Test methods and procedures.

**Subpart Q—Standards of Performance for Primary Zinc Smelters**

60.170 Applicability and designation of affected facility.
60.171 Definitions.
60.172 Standard for particulate matter.
60.173 Standard for sulfur dioxide.
60.174 Standard for visible emissions.
60.175 Monitoring of operations.
60.176 Test methods and procedures.

**Subpart R—Standards of Performance for Primary Lead Smelters**

60.180 Applicability and designation of affected facility.
60.181 Definitions.
60.182 Standard for particulate matter.
60.183 Standard for sulfur dioxide.
60.184 Standard for visible emissions.
60.185 Monitoring of operations.
60.186 Test methods and procedures.

### Subpart S—Standards of Performance for Primary Aluminum Reduction Plants

Sec.
60.190 Applicability and designation of affected facility.
60.191 Definitions.
60.192 Standard for fluorides.
60.193 Standard for visible emissions.
60.194 Monitoring of operations.
60.195 Test methods and procedures.

### Subpart T—Standards of Performance for the Phosphate Fertilizer Industry: Wet Process Phosphoric Acid Plants

60.200 Applicability and designation of affected facility.
60.201 Definitions.
60.202 Standard for fluorides.
60.203 Monitoring of operations.
60.204 Test methods and procedures.

### Subpart U—Standards of Performance for the Phosphate Fertilizer Industry: Superphosphoric Acid Plants

60.210 Applicability and designation of affected facility
60.211 Definitions.
60.212 Standard for fluorides.
60.213 Monitoring of operations.
60.214 Test methods and procedures.

### Subpart V—Standards of Performance for the Phosphate Fertilizer Industry: Diammonium Phosphate Plants

60.220 Applicability and designation of affected facility.
60.221 Definitions.
60.222 Standard for fluorides.
60.223 Monitoring of operations.
60.224 Test methods and procedures.

### Subpart W—Standards of Performance for the Phosphate Fertilizer Industry: Triple Superphosphate Plants

60.230 Applicability and designation of affected facility.
60.231 Definitions.
60.232 Standard for fluorides.
60.233 Monitoring of operations.
60.234 Test methods and procedures.

### Subpart X—Standards of Performance for the Phosphate Fertilizer Industry: Granular Triple Superphosphate Storage Facilities

60.240 Applicability and designation of affected facility
60.241 Definitions.
60.242 Standard for fluorides.
60.243 Monitoring of operations.
60.244 Test methods and procedures.

### Subpart Y—Standards of Performance for Coal Preparation Plants

Sec.
60.250 Applicability and designation of affected facility.
60.251 Definitions.
60.252 Standards for particulate matter.
60.253 Monitoring of operations.
60.254 Test methods and procedures.

### Subpart Z—Standards of Performance for Ferroalloy Production Facilities

60.260 Applicability and designation of affected facility.
60.261 Definitions.
60.262 Standard for particulate matter.
60.263 Standard for carbon monoxide.
60.264 Emission monitoring.
60.265 Monitoring of operations.
60.266 Test methods and procedures.

### Subpart AA—Standards of Performance for Steel Plants: Electric Arc Furnaces

60.270 Applicability and designation of affected facility.
60.271 Definitions.
60.272 Standard for particulate matter.
60.273 Emission monitoring.
60.274 Monitoring of operations.
60.275 Test methods and procedures.

### Subpart BB—Standards of Performance for Kraft Pulp Mills

60.280 Applicability and designation of affected facility.
60.281 Definitions.
60.282 Standard for particulate matter.
60.283 Standard for total reduced sulfur (TRS).
60.284 Monitoring of emissions and operations.
60.285 Test methods and procedures.

### Subpart CC—Standards of Performance for Glass Manufacturing Plants

60.290 Applicability and designation of affected facility.
60.291 Definitions.
60.292 Standards for particulate matter.
60.293-60.295 [Reserved]
60.296 Test methods and procedures.

### Subpart DD—Standards of Performance fo Grain Elevators

60.300 Applicability and designation of affected facility.
60.301 Definitions.
60.302 Standard for particulate matter.
60.302 Test methods and procedures.
60.304 Modifications.

**Subparts EE—FF—[Reserved]**

**Subpart GG—Standards of Performance for Stationary Gas Turbines**

Sec.
60.330 Applicability and designation of affected facility.
60.331 Definitions.
60.332 Standard for nitrogen oxides.
60.333 Standard for sulfur dioxide.
60.334 Monitoring of operations.
60.335 Test methods and procedures.

**Subpart HH—Standards of Performance for Lime Manufacturing Plants**

60.340 Applicability and designation of affected facility.
60.341 Definitions.
60.342 Standard for particulate matter.
60.343 Monitoring of emissions and operations.
60.344 Test methods and procedures.

**Subpart MM—Standards of Performance for Automobile and Light-Duty Truck Surface Coating Operations**

60.390 Applicability and designation of affected facility.
60.391 Definitions.
60.392 Standards for volatile organic compounds.
60.393 Performance test and compliance provisions
60.394 Monitoring of emissions and operations.
60.395 Reporting and recordkeeping requirements.
60.396 Reference methods and procedures.
60.397 Modifications.

**Subpart PP—Standards of Performance for Ammonium Sulfate Manufacture**

60.420 Applicability and designation of affected facility.
60.421 Definitions.
60.422 Standards for particulate matter
60.423 Monitoring of operations.
60.424 Test methods and procedures.

APPENDIX A—REFERENCE METHODS

Method 1—Sample and velocity traverses for stationary sources.
Method 2—Determination of stack gas velocity and volumetric flow rate (Type S pitot tube).
Method 3—Gas analysis for carbon dioxide, oxygen, excess air, and dry molecular weight.
Method 4—Determination of moisture content in stack gases.
Method 5—Determination of particulate emissions from stationary sources.
Method 6—Determination of sulfur dioxide emissions from stationary sources.
Method 7—Determination of nitrogen oxide emissions from stationary sources.
Method 8—Determination of sulfuric acid mist and sulfur dioxide emissions from stationary sources.
Method 9—Visual determination of the opacity of emissions from stationary sources.
Method 10—Determination of carbon monoxide emissions from stationary sources.
Method 11—Determination of hydrogen sulfide content of fuel gas streams in petroleum refineries.
Method 12—[Reserved]
Method 13A—Determination of total fluoride emissions from stationary sources—SPADNS Zirconium Lake Method.
Method 13B—Determination of total fluoride emissions from stationary sources—Specific Ion Electrode Method.
Method 14—Determination of fluoride emissions from potroom roof monitors of primary aluminum plants.
Method 15—Determination of hydrogen sulfide, carbonyl sulfide, and carbon disulfide emissions from stationary sources.
Method 16—Semicontinuous determination of sulfur emissions from stationary sources.
Method 17—Determination of particulate emissions from stationary sources (instack filtration method).
Method 18—[Reserved]
Method 19—Determination of sulfur dioxide removal efficiency and particulate, sulfur dioxide and nitrogen oxides emission rates from electric utility steam generators.
Method 20—Determination of nitrogen oxides, sulfur dioxide, and oxygen emissions from stationary gas turbines.
Method 24—Determination of Volatile Matter Content, Water Content, Density, Volume Solids, and Weight Solids of Surface Coatings.
Method 25—Determination of Total Gaseous Nonmethane Organic Emissions as Carbon.

APPENDIX B—PERFORMANCE SPECIFICATIONS

Performance Specification 1—Performance specifications and specification test procedures for transmissometer systems for continuous measurement of the opacity of stack emissions.

Performance Specification 2—Performance specifications and specification test procedures for monitors of $SO_2$ and $NO_x$ from stationary sources.

Performance Specification 3—Performance specifications and specification test procedures for monitors of $CO_2$ and $O_2$ from stationary sources.

APPENDIX C—DETERMINATION OF EMISSION RATE CHANGE

It is often necessary to refer to rules published in the FR and CFR. Each publication has its own reference system. When referring to the FR, the date of publication, the volume number, and the page number are sufficient to find a given regulation. For example, the regulations dealing with the continuous monitoring of emissions from new fossil-fuel-fired steam generators were promulgated in the Monday, October 6, 1975 *Federal Register*. This would be written as follows:

40 FR 46250 (October 6, 1975)

Volume no. — *Federal Register* — Page no. — Date appearing in FR

Referring to the promulgation in the CFR, however, is done by merely giving the title number and the section number. The reference used to specify the regulations in the CFR concerning the monitoring of new fossil-fuel-fired steam generators would be as follows:

40 CFR 60.45

Title no. — *Code of Federal Regulations* — Section no.

These referencing methods are useful for locating specific passages in the regulatory documents and for cross-referencing between documents.

## *The October 6, 1975 Federal Register*

The *Federal Register* published on October 6, 1975, is the document in which the EPA performance specifications for continuous monitoring systems were promulgated. An outline of this document is given in Figure 1. Several points have been revised by subsequent publication in the *Federal Register,* and major revisions were proposed October 10, 1979, and January 26, 1981. However, those revisions were not yet promulgated as of December 1982.

The October 6, 1975 issue of the *Federal Register* states drift limits and acceptable error limits for monitors. But more importantly, that issue establishes the position that the EPA **does not approve** specific brands of instrumentation or specific analytical methods (in the case of gas monitoring) for source-monitoring systems. This is in contrast to the policy of approving specific instrument models for continuous **ambient** air analysis. What it does establish, however, is the Performance Specification Test. The EPA provides latitude in continuous monitoring system design and application to allow sources to successfully handle individual problems. The **installed system** must meet minimum requirements for instrument location, drift, accuracy, and other specifications.

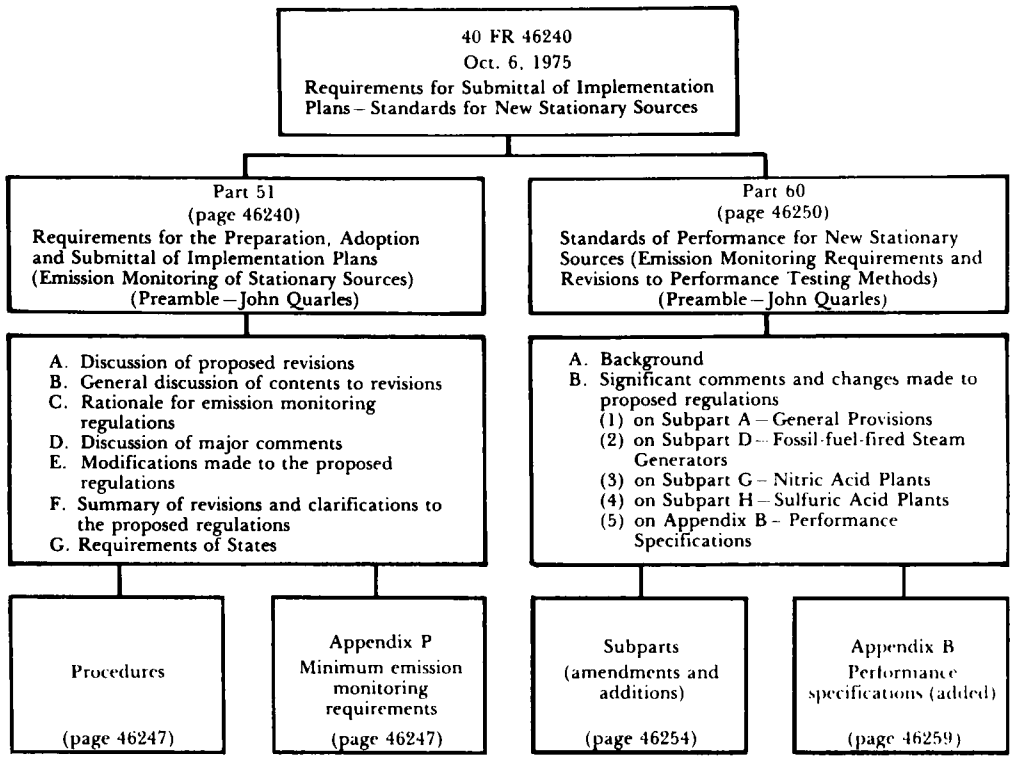


**Figure 1. Outline of 40 FR 46240, October 6, 1975.**

Once it has been determined that a facility is required to install a continuous-monitoring system for opacity or for a specific gas, a decision must be made as to what type of system or instrument will best satisfy both the EPA performance specifications and the needs of the plant. The Federal regulations do not require or recommend a specific type of instrument or system. The performance specifications give the general characteristics expected of an instrument and clearly define procedures for checking the installed instrument's performance. These methods are given in Appendix B of Part 60 of the CFR. An outline of the contents of Appendix B is given in Figure 2.

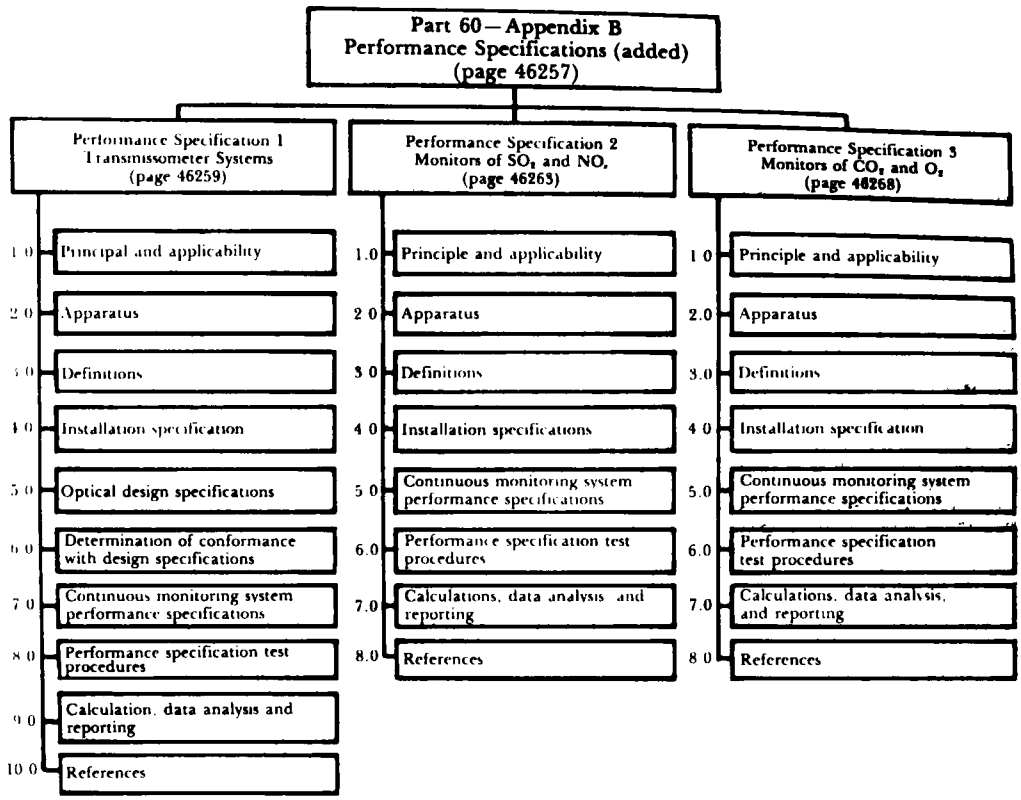


**Figure 2. Outline of Part 60, October 6, 1975 FR.**

Figure 2 shows that there are performance specifications for opacity monitors (transmissometers), $SO_2$ and $NO_x$ monitors, and $CO_2$ and $O_2$ monitors. Each specification discusses the installation requirements, the levels of performance expected of the instrument system during a one-week operational test period, and the statistical methods of analyzing the data obtained during the test period. The specifications for opacity monitors include a number of design characteristics that those monitors must have.

In summary, Part 60 of the *Code of Federal Regulations* incorporates the requirements for the continuous monitoring of designated new stationary sources. The manner in which continuous-monitoring systems are expected to perform after being installed on a source is given in Appendix B of Part 60. Existing sources are regulated by the States, and continuous-monitoring requirements for existing sources must be established by each State.

Since there are many more existing sources than there are new sources, continuous-monitoring requirements for existing sources affect a larger number of facilities than do monitoring requirements for new sources. There is a significant difference, however, between regulations for new sources and regulations for existing sources. As part of the Clean Air Act, the States regulate existing sources. The Federal Government regulates new sources, unless this responsibility is delegated to the State. The

States, however, may not arbitrarily set standards and regulations. They must follow certain minimum requirements established by the U.S. Environmental Protection Agency.

The Federal requirements that each State must follow when drafting regulations for continuous source-emission monitors are found in Title 40, Part 51, Appendix P of the *Code of Federal Regulations*. Once the State regulations are approved by the EPA, they become part of the State Implementation Plan (SIP). The SIP is a continually evolving document establishing the procedures through which a State plans to meet the ambient air quality standards set by the EPA and other goals established by the Clean Air Act.

The requirements were published in the October 6, 1975, *Federal Register*, at which time one year was given for the States to submit continuous emissions monitoring regulations as part of their SIPs. Figure 3 outlines Part 51 of the October 6, 1975, *Federal Register*.

There are presently four source categories for which States must draft continuous-monitoring regulations: fossil-fuel-fired steam generators, sulfuric acid plants, nitric acid plants, and petroleum refineries.

Several exemptions apply to existing sources but do not apply to sources covered by the New Source Performance Standards. The exemptions were allowed so that undue hardship would not be placed on existing facilities or on facilities that will be retired within five years (five years after inclusion of the source category in Part 51 Appendix P). Also, States are required by EPA to monitor only sources that have emission standards for $SO_2$, $NO_x$, or opacity for those source categories in their SIPs. The aim in Part 51 is to have States develop regulations that will be fair to existing sources. Sulfuric acid and nitric acid plants are required to install monitors if they have production capacities of greater than 300 tons per day. Catalyst regenerators at petroleum refineries need to monitor opacity only if they have a feed capacity of greater than 20,000 barrels per day.

In contrast to new fossil-fuel-fired steam generators that burn oil or coal, existing fossil-fuel-fired plants are required by the States to monitor $SO_2$ emissions only if a flue gas desulfurization (FGD) system is used. Also, for existing plants, $NO_x$ emissions are to be continuously monitored if the plant is within an Air Quality Control Region (AQCR) that has a control strategy for nitrogen oxides, if the source has a heat input rate of greater than $1000 \times 10^6$ Btu/hr, and if the source emits nitrogen oxides at levels greater than 70% of the State's $NO_x$ standard.

For developing continuous emission monitoring regulations, States have mechanisms other than the SIP regulations mandated by Appendix P. Many agencies currently use permits, direct compliance orders, variances, and their discretionary authority to require the installation of monitors on sources not specified under Appendix P requirements. In many cases, regulations developed under these procedures are more stringent than are those in Appendix P. States are increasingly using monitoring systems for compliance purposes, and in some cases monitoring systems are legally used as enforcement tools.

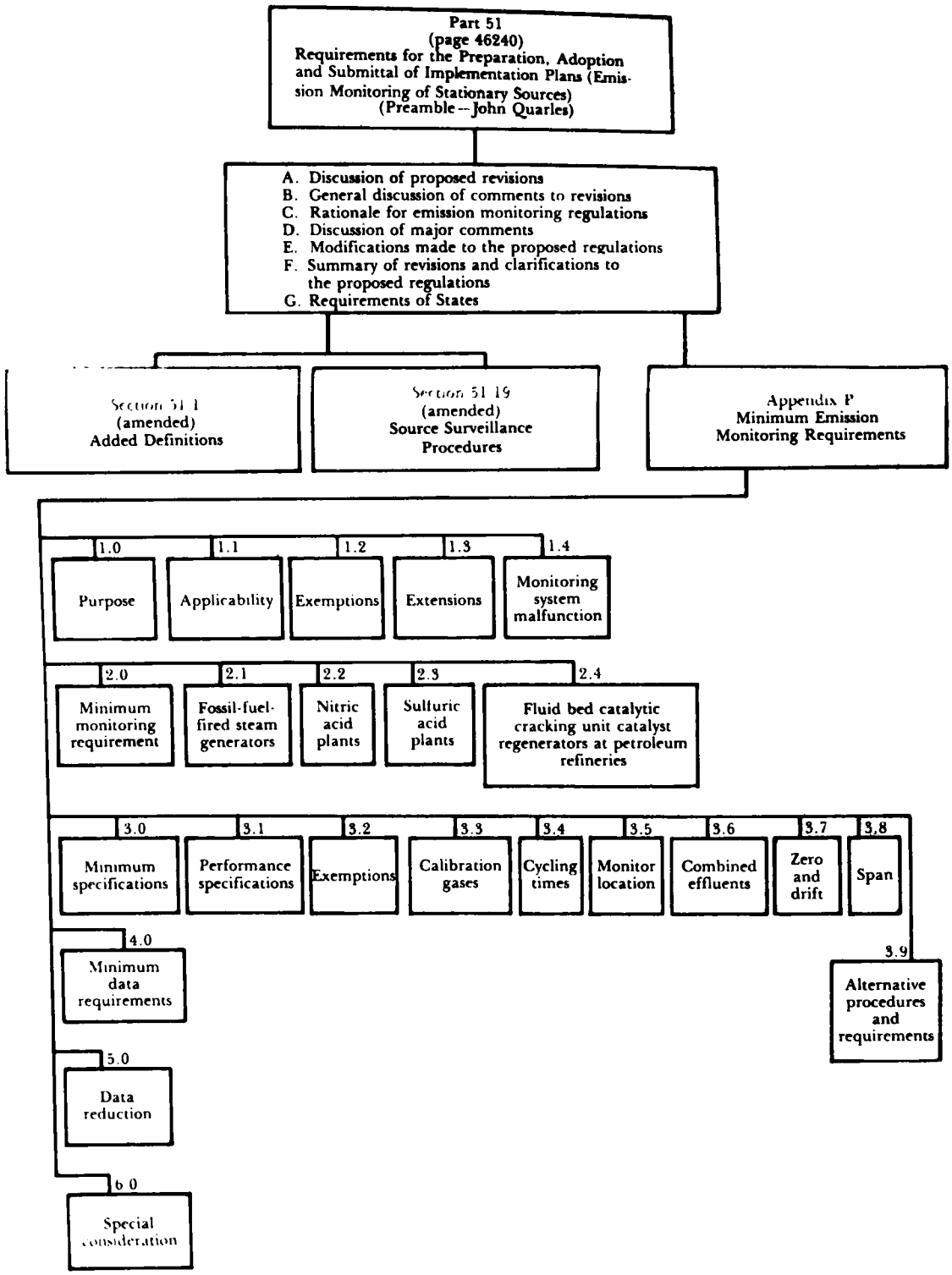


**Figure 3. Outline of Part 51, October 6, 1975 FR.**

Once it has been established that an existing source must install a continuous-monitoring system, the instrument specifications, the data reporting requirements, and the Performance Specification Test requirements are the same as for new sources. In fact, Part 51, which gives the minimum requirements for the State regulations, states that each State plan must incorporate, as a minimum, the contents of Appendix B, Part 60 (which gives the performance specifications for monitoring systems on new sources).

## *About This Manual*

This collection of documents is intended for use in APTI Course 474 *Continuous Emission Monitoring*. The manual includes selections from the *Code of Federal Regulations* and from *Federal Register* publications from October 6, 1975 to December 1, 1982. Documents included in Section II are not segregated by topic and are not classified other than by the date on which they were published.

Your course instructor will refer you to specific items in this manual as you proceed through the course. This manual will also serve as a useful reference document for your further work with source-monitoring systems.

James A. Jahnke

# Section I

## Selected Information on New Source Performance Standards

A. Federal Standards of Performance for New Stationary Sources of Air Pollution—A Summary of Regulations by Naomi Durkee, U.S. Environmental Protection Agency. (Reprinted by permission from the Air Pollution Control Association, *1981-1982 APCA Directory and Resource Book, Special Anniversary Edition*. APCA. Pittsburgh, PA.)

B. Summary of Proposal and Promulgation Dates for NSPS Source Categories.

C. Selections from the *Code of Federal Regulations* (CFR), Sections 40 CFR 60.5 to 40 CFR 60.14.

# FEDERAL STANDARDS OF PERFORMANCE FOR NEW STATIONARY SOURCES OF AIR POLLUTION

## A Summary of Regulations

**Naomi D. Durkee**
U S Environmental Protection Agency

In order to make the information in the *Federal Register* more easily accessible, a summary has been prepared of Federal standards of performance for new stationary sources of air pollution. The standards of performance promulgated by the Environmental Protection Agency in the period from December 1971 through June 1981 are presented in tabular form.

In the August 1979 issue of *JAPCA*, Shirley K. Tabler of the U S Environmental Protection Agency (EPA) summarized the Federal standards of performance for new stationary sources of air pollution promulgated by EPA for the period from December 1971 through June 1979. The summary was developed to provide a concise reference for people to use when looking up a particular standard. The summary has proven to be very useful to many individuals and groups who work with Federal standards of performance for new stationary sources of air pollution. The following summary, presented again in tabular form, is an update of the August 1979 information and includes those EPA standards promulgated for the period from December 1971 through June 1981. It includes the categories of stationary sources, the affected facilities to which the standards apply, the pollutants regulated, the levels to which they must be controlled and the requirements for monitoring emissions and operating parameters. Although administrative type amendments (i e., authority citation additions and changes and correction notices) to the standards were included in the original summary, these type amendments are not included in the update. All other revisions are included.

The standards are issued under section 111 of the Clean Air Act, as amended, and apply to new, modified, and reconstructed stationary sources of air pollution. The standards reflect the degree of emission limitation achievable through the application of the best demonstrated technological system of continuous emission reduction, considering the cost and any nonair quality health and environmental impact and energy requirements.

Before developing standards for a particular source category, EPA must first identify the pollutants emitted and determine that they contribute significantly to air pollution which endangers public health or welfare. The standards are then developed and proposed in the *Federal Register*. After a period of time (usually 60 days) during which the public is invited to submit comments on the proposal, appropriate revisions are made to the regulations and they are promulgated in the *Federal Register*. To cite such a promulgation, it is common to refer to it by volume and page number, i e., 36 FR 24876, which means Volume 36, page 24876 of the *Federal Register*. The table gives such references for the proposal, promulgation, and subsequent revisions of each standard listed.

Once a year, all regulations which have been published in the *Federal Register* during that year are codified for inclusion in the Code of Federal Regulations (CFR). Only the regulations are codified, the preambles which appear with the regulations in the *Federal Register* are not included in the CFR. The CFR is divided into 50 titles which represent broad areas subject to Federal regulation. Each title is divided into chapters, subchapters, and parts. EPA's regulations for air pollutant emissions from new stationary sources are included in Title 40 - Protection of the Environment, Chapter I - Environmental Protection Agency, Subchapter C (regulations concerning Air Programs), and Part 60 —"Standards of Performance for New Stationary Sources," thus the reference in the table heading to 40 CFR Part 60.

The table lists all standards of performance promulgated through June 1981. The complete regulations for most of these standards are included in the CFR which was revised as of July 1, 1980, and contains Parts 60 to 99. Any future regulations proposed or promulgated will appear in the *Federal Register* (published daily except Saturday and Sunday) and will be codified in the annual revision to the CFR. Anyone wishing to subscribe to the *Federal Register* or purchase the CFR should contact the Superintendent of Documents, U S Government Printing Office, Washington, D C 20402.

Standards for the following regulations have been proposed and will be promulgated in the next year: phosphate rock plants, lead acid battery manufacturing, VOC from gasoline tank truck loading racks and bulk gasoline terminals, large appliance surface coating, VOC fugitive emission sources in the synthetic organic chemicals manufacturing industry, metal coil surface coating, asphalt processing and asphalt roofing manufacture, organic solvent cleaners, petroleum liquid storage vessels—equivalency determination, and internal combustion engines.

This summary is provided as a quick reference only and is not to be used for enforcement purposes. Please refer to the *Federal Register* issues (cited in the first column of the table) for complete details concerning a standard.

Ms Durkee is in the Standards Development Branch, Office of Air Quality Planning and Standards, U S Environmental Protection Agency, Research Triangle Park, NC 27711.

# Standards of Performance—40 CFR Part 60

| Source category | Affected facility | Pollutant | Emission level | Monitoring requirement[a] |
|---|---|---|---|---|
| **Subpart D:** | | | | |
| **Fossil fuel fired steam generators** >73 MW heat input (>250 million Btu/hr) | Coal-fired boilers[b] | Particulate<br>Opacity<br>$SO_2$ | 0.10 lb/million Btu<br>20% (27% for 6 min/hr)<br>1.20 lb/million Btu | No requirement<br>Continuous<br>Continuous |
| *Proposed*<br>8/17/71 (36 FR 15703) | | $NO_x$ | | Continuous |
| *Promulgated*<br>12/23/71 (36 FR 24876) | | Anthracite, Bituminous, or Subbituminous Coal | 0.70 lb/million Btu | |
| | | Lignite[c] | 0.60 lb/million Btu | |
| *Revised*<br>7/26/72 (37 FR 14877)<br>6/14/74 (39 FR 20790)<br>1/16/75 (40 FR 2803)<br>10/6/75 (40 FR 46250)<br>8/15/77 (42 FR 41122)<br>12/15/77 (42 FR 61537)<br>3/7/78 (43 FR 9276) | | More than 25% coal refuse | Exempt | |
| | Oil or gas-fired boilers | Particulate<br>Opacity<br>$SO_2$–oil<br>$NO_x$–oil<br>$NO_x$–gas | 0.10 lb/million Btu<br>20% (27% for 6 min/hr)<br>0.80 lb/million Btu<br>0.30 lb/million Btu<br>0.20 lb/million Btu | No requirement<br>Continuous<br>Continuous<br>Continuous<br>Continuous |
| **Subpart Da:** | | | | |
| **Electric utility steam generating units** >73 MW heat input (>250 million Btu/hr) | Coal-fired boilers (and coal-derived fuels) | Particulate<br>Opacity | 0.03 lb/million Btu<br>20% (27% for 6 min/hr) | No requirement<br>Continuous |
| *Proposed*<br>9/19/78 (43 FR 42154) | | $SO_2$ | 1.20 lb/million Btu[d] and 90% reduction,[e] except 70% reduction when emissions are less than 0.60 lb/million Btu[e] | Continuous compliance[f] |
| *Promulgated*<br>6/11/79 (44 FR 33580) | | $NO_x$[g] | | Continuous compliance[f] |
| | | Anthracite, Bituminous, and Lignite[c] | 0.60 lb/million Btu | |
| | | Subbituminous coal | 0.50 lb/million Btu | |
| | | Coal-derived fuels and shale oil | 0.50 lb/million Btu | |
| | | More than 25% coal refuse | Exempt | |
| | Oil or gas-fired boilers | Particulate<br>Opacity<br>$SO_2$ | 0.03 lb/million Btu<br>20% (27% for 6 min/hr)<br>0.80 lb/million Btu and 90% reduction[e] or 0.20 lb/million Btu (no reduction requirement) | No requirement<br>Continuous<br>Continuous compliance[f] |
| | | $NO_x$–oil | 0.30 lb/million Btu | Continuous compliance[f] |
| | | $NO_x$–gas | 0.20 lb/million Btu | Continuous compliance[f] |
| **Subpart E:** | | | | |
| **Incinerators** (>50 tons/day) | Incinerators | Particulate | 0.08 gr/dscf corrected to 12% $CO_2$ | No requirement |
| *Proposed*<br>8/17/71 (36 FR 15703) | | | | |
| *Promulgated*<br>12/23/71 (36 FR 24876) | | | | |
| *Revised*<br>6/14/74 (39 FR 20790) | | | | |

| Source category | Affected facility | Pollutant | Emission level | Monitoring requirement[a] |
|---|---|---|---|---|
| **Subpart F:** | | | | |
| **Portland cement plants** | Kiln | Particulate | 0.30 lb/ton | No requirement |
| *Proposed* 8/17/71 (36 FR 15703) | | Opacity | 20% | No requirement |
| | Clinker cooler | Particulate | 0.10 lb/ton | No requirement |
| *Promulgated* 12/23/71 (36 FR 24876) | | Opacity | 10% | No requirement |
| *Revised* 6/14/74 (39 FR 20790) 11/12/74 (39 FR 39874) 10/6/75 (40 FR 46250) | Fugitive Emission points | Opacity | 10% | No requirement |
| **Subpart G:** | | | | |
| **Nitric acid plants** | Process equipment | Opacity | 10% | No requirement |
| *Proposed* 8/17/71 (36 FR 15703) | | $NO_x$ | 3.0 lb/ton | Continuous |
| *Promulgated* 12/23/71 (36 FR 24876) | | | | |
| *Revised* 5/23/73 (38 FR 13562) 6/14/74 (39 FR 20790) 10/6/75 (40 FR 46250) | | | | |
| **Subpart H:** | | | | |
| **Sulfuric acid plants** | Process equipment | $SO_2$ | 4.0 lb/ton | Continuous |
| *Proposed* 8/17/71 (36 FR 15703) | | Acid mist | 0.15 lb/ton | No requirement |
| | | Opacity | 10% | No requirement |
| *Promulgated* 12/23/71 (36 FR 24876) | | | | |
| *Revised* 5/23/73 (38 FR 13562) 6/14/74 (39 FR 20790) 10/6/75 (40 FR 46250) | | | | |
| **Subpart I:** | | | | |
| **Asphalt concrete plants** | Dryers, screening and weighing systems, storage, transfer, and loading systems, and dust handling equipment | Particulate | 0.04 gr/dscf (90 mg/dscm) | No requirement |
| *Proposed* 6/11/73 (38 FR 15406) | | Opacity | 20% | No requirement |
| *Promulgated* 3/8/74 (39 FR 9308) | | | | |
| *Revised* 10/6/75 (40 FR 46250) | | | | |
| **Subpart J:** | | | | |
| **Petroleum refineries** | Fluid catalytic cracking unit catalyst regenerator | Particulate | 1.0 lb/1000 lb of coke burn-off | No requirement |
| *Proposed* 6/11/73 (38 FR 15406) | | Opacity | 30% (6 min exemption) | Continuous |
| *Promulgated* 3/8/74 (39 FR 9308) | | CO | 0.05% | Continuous[b] |
| | Fuel gas combustion devices | $SO_2$ | 0.10 gr/dscf | Continuous |
| *Revised* 10/6/75 (40 FR 46250) 6/24/77 (42 FR 32426) 3/15/78 (43 FR 10866) 3/12/79 (44 FR 13480) | | $H_2S$ | 230 mg/dscm | Continuous[b] |
| | Claus sulfur recovery plants | $SO_2$ | 0.025% (at 0% oxygen) | Continuous |
| | | Reduced sulfur compounds plus $H_2S$ | 0.030% (at 0% oxygen) | Continuous[b] |
| | | | 0.0010% (at 0% oxygen) | Continuous[b] |

| Source category | Affected facility | Pollutant | Emission level | Monitoring requirement[a] |
|---|---|---|---|---|
| **Subpart K:** | | | | |
| **Storage vessels for petroleum liquids** constructed after 6/11/73 and prior to 5/19/78 | storage tanks >40,000 gal but not >65,000 gal capacity, constructed after 3/8/74 and prior to 5/19/78 | VOC | Equipment standard[m] | No requirement |
| *Proposed* 6/11/73 (38 FR 15406) | >65,000 gal, constructed after 6/11/73 and prior to 5/19/78. | | | |
| *Promulgated* 3/8/74 (39 FR 9308) | | | | |
| *Revised* 4/17/74 (39 FR 13776) 6/14/74 (39 FR 20790) 4/4/80 (45 FR 23373) | | | | |
| **Subpart Ka:** | | | | |
| **Storage vessels for petroleum liquids** constructed After May 18, 1978 | Storage Vessel >40,000 gal capacity constructed after 5/18/78 | VOC | Equipment Standard[n] | None |
| *Proposed* 5/18/78 (43 FR 21615) | Storage Vessel <420,000 gal capacity for petroleum or condensate stored, processed, or treated prior to custody transfer is *not* an affected facility and is exempted | | | |
| *Promulgated* 4/4/80 (45 FR 23373) | | | | |
| **Subpart L:** | | | | |
| **Secondary lead smelters** | Reverberatory and blast furnaces | Particulate | 0.022 gr/dscf (50 mg/dscm) | No requirement |
| *Proposed* 6/11/73 (38 FR 15406) | | Opacity | 20% | No requirement |
| | Pot furnaces | Opacity | 10% | No requirement |
| *Promulgated* 3/8/74 (39 FR 9308) | | | | |
| *Revised* 4/17/74 (39 FR 13776) 10/6/75 (40 FR 46250) | | | | |
| **Subpart M:** | | | | |
| **Secondary brass and bronze plants** | Reverberatory furnaces | Particulate | 0.022 gr/dscf (50 mg/dscm) | No requirement |
| *Proposed* 6/11/73 (38 FR 15406) | | Opacity | 20% | No requirement |
| | Blast and electric furnaces | Opacity | 10% | No requirement |
| *Promulgated* 3/8/74 (39 FR 9308) | | | | |
| *Revised* 10/6/75 (40 FR 46250) | | | | |
| **Subpart N:** | | | | |
| **Iron and steel plants** | Basic oxygen process furnaces | Particulate | 0.022 gr/dscf (50 mg/dscm) | No requirement |
| *Proposed* 6/11/73 (38 FR 15406) | | Opacity | 10% | Scrubber pressure loss |
| *Promulgated* 3/8/74 (39 FR 9308) | | | 20% once each production cycle | Water pressure |
| *Revised* 4/13/78 (43 FR 15600) | | | | |

| Source category | Affected facility | Pollutant | Emission level | Monitoring requirement[a] |
|---|---|---|---|---|
| **Subpart O:** | | | | |
| **Sewage treatment plants** | Sludge incinerators | Particulate | 1.30 lb/ton | Mass or volume of sludge. Mass of municipal solid waste, if any |
| *Proposed* 6/11/73 (38 FR 15406) | | | | |
| | | Opacity | 20% | No requirement |
| *Promulgated* 3/8/74 (39 FR 9308) | | | | |
| *Revised* 4/17/74 (39 FR 13776) 5/3/74 (39 FR 15396) 10/6/75 (40 FR 46250) 11/10/77 (42 FR 58520) | | | | |
| **Subpart P:** | | | | |
| **Primary copper smelters** | Dryer | Particulate | 0.022 gr/dscf (50 mg/dscm) | No requirement |
| *Proposed* 10/16/74 (39 FR 37039) | | Opacity | 20% | Continuous |
| | Roaster, smelting furnace,* copper converter | $SO_2$ | 0.065% | Continuous |
| *Promulgated* 1/15/76 (41 FR 2331) | | Opacity | 20% | No requirement |
| *Revised* 2/26/76 (41 FR 8346) 11/1/77 (42 FR 125) | * Reverberatory furnaces that process high-impurity feed materials are exempt from $SO_2$ standard | | | |
| **Subpart Q:** | | | | |
| **Primary zinc smelters** | Sintering machine | Particulate | 0.022 gr/dscf (50 mg/dscm) | No requirement |
| *Proposed* 10/16/74 (39 FR 37039) | | Opacity | 20% | Continuous |
| *Promulgated* 1/15/76 (41 FR 2331) | Roaster | $SO_2$ | 0.065% | Continuous |
| | | Opacity | 20% | No requirement |
| **Subpart R:** | | | | |
| **Primary lead smelters** | Blast or reverberatory furnace, sintering machine discharge end | Particulate | 0.022 gr/dscf (50 mg/dscm) | No requirement |
| *Proposed* 10/16/74 (39 FR 37039) | | Opacity | 20% | Continuous |
| *Promulated* 1/15/76 (41 FR 2331) | Sintering machine, electric smelting furnace, converter | $SO_2$ | 0.065% | Continuous |
| | | Opacity | 20% | No requirement |
| **Subpart S:** | | | | |
| **Primary aluminum reduction plants** | Potroom group (a) Soderberg plant | (a) Total fluorides | 2.0 lb/ton | No requirement |
| | | Opacity | 10% | No requirement |
| *Proposed* 10/23/74 (39 FR 37729) | (b) Prebake plant | (b) Total fluorides | 1.9 lb/ton | No requirement |
| *Promulgated* 1/26/76 (41 FR 3825) | | Opacity | 10% | No requirement |
| | Anode bake plants | Total fluorides | 0.1 lb/ton | No requirement |
| 6/30/80 (45 FR 44206) | | Opacity | 20% | No requirement |
| **Subpart T:** | | | | |
| **Phosphate fertilizer plants** | Wet process phosphoric acid | Total fluorides | 0.02 lb/ton | Total pressure drop across process scrubbing system |
| *Proposed* 10/22/74 (39 FR 37601) | | | | |
| *Promulgated* 8/6/75 (40 FR 33152) | | | | |

| Source category | Affected facility | Pollutant | Emission level | Monitoring requirement[a] |
|---|---|---|---|---|
| **Subpart U:** | Superphosphoric acid | Total fluorides | 0.01 lb/ton | Total pressure drop across process scrubbing system |
| **Subpart V:** | Diammonium phosphate | Total fluorides | 0.06 lb/ton | Total pressure drop across process scrubbing system |
| **Subpart W:** | Triple superphosphate | Total fluorides | 0.2 lb/ton | Total pressure drop across process scrubbing system |
| **Subpart X:** | Granular triple superphosphate | Total fluorides | $5.0 \times 10^{-4}$ lb/hr/ton | Total pressure drop across process scrubbing system |
| **Subpart Y:** | | | | |
| **Coal preparation plants** | Thermal dryer | Particulate | 0.031 gr/dscf (0.070 g/dscm) | Temperature scrubber pressure loss Water pressure |
| *Proposed* 10/24/74 (39 FR 37921) | | | | |
| *Promulgated* 1/15/76 (41 FR 2232) | | Opacity | 20% | No requirement |
| | Pneumatic coal cleaning equipment | Particulate | 0.018 gr/dscf (0.040 g/dscm) | No requirement |
| | | Opacity | 10% | No requirement |
| | Processing and conveying equipment, storage systems, transfer and loading systems | Opacity | 20% | No requirement |
| **Subpart Z:** | | | | |
| **Ferroalloy production facilities** | Electric submerged arc furnaces | Particulate | 0.99 lb/Mw-hr (0.45 kg/Mw-hr) ("high silicon alloys") 0.51 lb/Mw-hr (0.23 kg/Mw-hr) (chrome and manganese alloys) | No requirement |
| *Proposed* 10/21/74 (39 FR 37469) | | | | |
| *Promulgated* 5/4/76 (41 FR 18497) | | | No visible emissions may escape furnace capture system | Flowrate monitoring in hood |
| *Revised* 5/20/76 (41 FR 20659) | | | No visible emission may escape tapping system for >40% of each tapping period | Flowrate monitoring in hood |
| | | Opacity | 15% | Continuous |
| | | CO | 20% volume basis | No requirement |
| | Dust handling equipment | Opacity | 10% | No requirement |
| **Subpart AA:** | | | | |
| **Iron and steel plants** | Electric arc Furnaces | Particulate | 0.0052 gr/dscf (12 mg/dscm) | No requirement |
| *Proposed* 10/21/74 (39 FR 37465) | | | | |
| *Promulgated* 9/23/75 (40 FR 43850) | | Opacity | | |
| | | (a) control device | 3% | Continuous |
| | | (b) shop roof | 0, except 20%–charging 40%–tapping | Flowrate monitoring in capture hood Pressure monitoring in DSE system |
| | Dust handling equipment | Opacity | 10% | No requirement |

| Source category | Affected facility | Pollutant | Emission level | Monitoring requirement[a] |
|---|---|---|---|---|
| **Subpart BB:** | | | | |
| **Kraft pulp mills** (Kraft pulping operations within neutral sulfite semichemical pulping mills) | Digester, washer, evaporator, condensate stripper, or black liquor oxidation systems | Total reduced sulfur (TRS) | 5 ppm by volume on a dry basis, corrected to a specific oxygen content | Continuous[h] |
| *Proposed* 9/24/76 (41 FR 42012) | Straight kraft recovery furnaces | TRS | 5 ppm by volume on a dry basis corrected to 8% oxygen | Continuous[h] |
| *Promulgated* 2/23/78 (43 FR 7568) | Cross recovery furnaces | TRS | 25 ppm by volume on a dry basis, corrected to 8% oxygen | Continuous[h] |
| *Revised* 8/7/78 (43 FR 34784) 1/12/79 (44 FR 2578) | Smelt tanks | TRS | 0.0084 g/kg black liquor solids (dry weight) [0.0168 lb/ton liquor solids (dry weight) | Continuous[h] |
| | Lime kilns | TRS | 8 ppm by volume on a dry basis, corrected to 10% oxygen | Continuous[h] |
| | Any recovery furnace | Particulate | 0.10 g/dscm (0 044 gr/dscf), corrected to 8% oxygen | No requirement |
| | | Opacity | 35% | Continuous |
| | Smelt tanks | Particulate | 0 1 g/kg black liquor solids (dry weight) [0.2 lb/ton black liquor solids (dry weight)] | Continuous measurement of pressure loss when using a scrubber emission control device |
| | Lime kilns | Particulate | 0.15 g/dscm (0.067 gr/dscf), corrected to 10% oxygen when gaseous fossil fuel is burned | Continuous measurement of pressure loss when using a scrubber emission control device |
| | | | 0.30 g/dscm (0.13 gr/dscf), corrected to 10% oxygen when liquid fossil fuel is burned | |
| **Subpart CC:** | | | | |
| **Glass Mfg. Plants** *Proposed* 6/15/79 (44 FR 34840) *Promulgated* 10/7/80 (45 FR 66751) **Petitions for reconsideration have been filed** | Glass melting furnace | Particulate | Rates vary | None |

| Source category | Affected facility | Pollutant | Emission level | Monitoring Requirement[a] |
|---|---|---|---|---|
| **Subpart DD:** | | | | |
| **Grain elevators**[b,j] | All facilities listed below | Particulate | 0.01 gr/dscf | No requirement |
| *Proposed* 1/13/77 (42 FR 2842) 6/24/77 (42 FR 32264) -Proposal suspended 5/3/78 (43 FR 34349) -Proposal reinstated | Truck loading stations | Opacity | 10% | No requirement |
| | Truck unloading stations | Opacity | 5% | No requirement |
| | Barge or ship loading stations | Opacity | 20% | No requirement |
| *Promulgated* 8/3/78 (43 FR 34340) | Barge or ship unloading stations | | Equipment standard[k] | No requirement |
| | Railcar loading stations | Opacity | 5% | No requirement |
| | Railcar unloading stations | Opacity | 5% | No requirement |
| | Grain dryers -Column dryers which have perforated plates with hole sizes larger than 0.094 inch diameter -Rack dryers with screen filters coarser than 50 mesh | Opacity | 0% | No requirement |
| | Grain handling operations | Opacity | 0% | No requirement |
| **Subpart GG:** | | | | |
| **Gas Turbines** heat input at peak load equal to or greater than 10.7 gigajoules/hr (~1000 horsepower) | Simple and regenerative cycle gas turbines and the gas turbine portion of a combined cycle steam/electric generating system.* | $NO_x$ $SO_2$ | See 44 FR 52798 | Continuous monitoring of water/fuel ratio Monitor sulfur and nitrogen content of fuel fired. |
| *Proposed* October 3, 1977 (42 FR 53788) Promulgated. September 10, 1979 (44 FR 52798) Standard under Petition to review * | | | | |
| * Proposed revision 4/15/81 (46 FR 22005). Revises the applicability of the standard with respect to industrial gas turbines | | | | |
| **Subpart HH:** | | | | |
| **Lime manufacturing plants** | Rotary lime kilns | Particulate | 0.30 lb/ton | Scrubber pressure loss; Scrubber liquid supply pressure |
| *Proposed* 5/3/77 (42 FR 22506) | | Opacity | 10% | Continuous |
| *Promulgated* 3/7/78 (43 FR 9452) | Lime hydrators | Particulate | 0.15 lb/ton | Scrubber liquid flow rate; Electric current used by scrubber |

| Source category | Affected facility | Pollutant | Emission level | Monitoring requirement[a] |
|---|---|---|---|---|
| **Subpart MM** | | | | |
| **Automobile and Light Duty Truck Surface Coating Operations**<br><br>*Proposed:*<br>10/5/79 (44 FR 57792)<br><br>*Promulgated:*<br>12/24/80 (45 FR 85415) | Prime coat operations<br>Guide coat operations<br>Topcoat operations<br><br>Exempted from these provisions: operations to coat plastic body components or all plastic automobiles or light-duty truck bodies on separate coating lines. | VOC | 0.16 kilograms of VOC per liter of applied coating solids from each prime coat operation<br><br>1.40 kilograms of VOC per liter of applied coating solids from each guide coating operation<br><br>1.47 kilograms of VOC per liter of applied coating solids from each topcoat operation | Incinerator temperature (if applicable) |
| **Subpart PP:** | | | | |
| **Ammonium Sulfate Mfg.**<br><br>*Proposed*<br>2/4/80 (45 FR 7758)<br>*Promulgated*<br>11/12/80 (45 FR 74846) | Ammonium sulfate dryer w/in ammon. sulf. mfg. plant in caprolactam by-product, synthetic, and coke oven by-product sectors | Particulate<br><br>Opacity | 0.15 kg/Mg (.30 lb/ton)<br>15% | Provide flow monitoring devices or weigh scales for feed material streams<br>Monitor pressure loss across the control device |

[a] Continuous monitors are used to determine excess emissions only, unless noted as "continuous compliance."
[b] Includes boilers firing coal/wood mixtures.
[c] If more than 25% lignite which was mined in North Dakota, South Dakota, or Montana is fired in a slap tag furnace, the standard is 0.80 lb/million Btu.
[d] For SRC-I an 85% reduction requirement applies (24-hour average).
[e] Percent reduction requirement does not apply to facilities firing 100% anthracite, resource recovery facilities firing less than 25% fossil fuel (90-day average), or facilities located in noncontinental areas.
[f] 30-day rolling average, except where noted.
[g] Commercial demonstration permits are available for: SRC-I ($SO_2$) 1.20 lb/million Btu and 80% reduction (24-hour); FBC ($SO_2$) 1.20 lb/million Btu and 85% reduction; Coal liquefaction ($NO_x$) 0.70 lb/million Btu.
[h] Not effective until monitor performance specifications are proposed and promulgated.
[i] Grain elevator terminals (i.e., grain elevators which have permanent grain storage capacity of over 2.5 million bushels), which handle or process wheat, corn, sorghum, rice, rye, oats, barley or soybeans.
[j] Grain storage elevators at wheat flour mills, wet corn mills, dry corn mills (human consumption), rice mills, and soybean oil extraction plants, which handle or process wheat, corn, sorghum, rice, rye, oats, barley or soybeans and which have a permanent grain storage capacity of over 1 million bushels.
[k] Marine leg enclosed from top to bottom of leg, with ventilation flow rate of both leg and receiving hopper of 40 cubic feet of air per bushel of grain unloaded.
[m] For vapor pressure 78–570 mm Hg, equip with floating roof, vapor recovery system, or equivalent; for vapor pressure >570 mm Hg, equip with vapor recovery system or equivalent.
[n] For vapor pressure 10.3 kPa (1.5 psia) but not 75.6 kPa (11.1 psia) equipped with external floating roof with primary and secondary seals (see *Federal Register* for seal gap requirements).
*or* For fixed roof with internal floating type cover equipped with continuous closure device.
*or* For vapor pressure 76.6 kPa, equipped with a vapor recovery system which collects all VOC vapors and gases and a vapor return or disposal system designed for 95% removal by weight.
*or* equivalent to one of the above.

**U.S. Program Status for Hazardous Air Pollutants**

1. *Listed Under Section 111(d)*[a]
   sulfuric acid mist
   fluorides
   total reduced sulfur
2. *Candidates for 111(d)*
   cadmium
   trichloroethylene
   perchloroethylene
   methyl chloroform
   methylene chloride
   trichlorotrifluoroethane
3. *Listed under Section 112*[a]
   asbestos
   beryllium
   mercury
   vinyl chloride
   benzene
   inorganic arsenic
   radionuclides
4. *Candidates for 112*
   acrylonitrile
   coke oven emissions
5. *FY 81 Candidates for Action*
   ethylene dichloride
   formaldehyde
   nickel
   vinylidene chloride
6. *FY 82 Candidates for Action*
   epichlorohydrin
   ethylene oxide
   manganese

[a] U S Clean Air Act
Note Pollutants for which evidence of carcinogenicity is classified as best or substantial generally will qualify for listing as a hazardous pollutant under Section 112 Where evidence is more tentative, pollutants may be listed for control under Section 111
Reprinted from Reference 4 Original source EPA, 1981

**Summary of Proposal and Promulgation Dates for NSPS Source Categories**

| Subpart | Source | Promulgation date | Proposed date |
|---|---|---|---|
| D | Fossil-fuel-fired Steam Generators | 12/23/71 | 8/17/71 |
| Da | Electric Utility Steam Generators | 6/11/79 | 9/18/78 |
| E | Incinerators | 12/23/71 | 8/17/71 |
| F | Portland Cement Plants | 12/23/71 | 8/17/71 |
| G | Nitric Acid Plants | 12/23/71 | 8/17/71 |
| H | Sulfuric Acid Plants | 12/23/71 | 8/17/71 |
| I | Asphalt Concrete Plants | 3/08/74 | 6/11/73 |
| J | Petroleum Refineries | 3/08/74 | 6/11/73 |
| K | Storage Vessels for Petroleum Liquids | 3/08/74 | 6/11/73 |
| L | Secondary Lead Smelters | 3/08/74 | 6/11/73 |
| M | Brass and Bronze Production Plants | 3/08/74 | 6/11/73 |
| N | Iron and Steel Plants | 3/08/74 | 6/11/73 |
| O | Sewage Treatment Plants | 3/08/74 | 6/11/73 |
| P | Primary Copper Smelters | 1/15/76 | 10/16/74 |
| Q | Primary Zinc Smelters | 1/15/76 | 10/16/74 |
| R | Primary Lead Smelters | 1/15/76 | 10/16/74 |
| S | Primary Aluminum Reduction Plants | 1/26/76 | 10/23/74 |
| TUVWX | Phosphate Fertilizer Industry | 8/06/75 | 10/22/74 |
| Y | Coal Preparation Plants | 1/15/76 | 10/24/74 |
| Z | Ferroalloy Production Plants | 5/04/76 | 10/21/74 |
| AA | Steel Plants: Electric Arc Furnaces | 9/23/75 | 10/21/74 |
| BB | Kraft Pulp Mills | 2/23/78 | 9/24/76 |
| CC | Glass Manufacturing Plants | 6/15/79 | 10/07/80 |
| DD | Grain Elevators | 8/03/78 | 1/03/77 |
| EE | Surface Coating of Metal Furniture | 11/28/80 | 10/29/82 |
| GG | Gas Turbines | 10/03/77 | 10/10/79 |
| HH | Lime Manufacturing Plants | 3/07/78 | 3/03/77 |
| MM | Automobile and Light Duty Truck Surface Coating Operations | 10/05/79 | 12/24/80 |
| PP | Ammonium Sulfate Manufacturing | 2/04/80 | 11/12/80 |
| SS | Industrial Surface Coating: Large Appliances | 12/24/80 | 10/27/82 |
| TT | Metal Coil Surface Coating | 1/05/81 | 11/01/82 |

**§ 60.5 Determination of construction or modification.**

(a) When requested to do so by an owner or operator, the Administrator will make a determination of whether action taken or intended to be taken by such owner or operator constitutes construction (including reconstruction) or modification or the commencement thereof within the meaning of this part.

(b) The Administrator will respond to any request for a determination under paragraph (a) of this section within 30 days of receipt of such request.

[40 FR 58418, Dec. 16, 1975]

**§ 60.6 Review of plans.**

(a) When requested to do so by an owner or operator, the Administrator will review plans for construction or modification for the purpose of providing technical advice to the owner or operator.

(b)(1) A separate request shall be submitted for each construction or modification project.

(2) Each request shall identify the location of such project, and be accompanied by technical information describing the proposed nature, size, design, and method of operation of each affected facility involved in such project, including information on any equipment to be used for measurement or control of emissions.

(c) Neither a request for plans review nor advice furnished by the Administrator in response to such request shall (1) relieve an owner or operator of legal responsibility for compliance with any provision of this part or of any applicable State or local requirement, or (2) prevent the Administrator from implementing or enforcing any provision of this part or taking any other action authorized by the Act.

[36 FR 24877, Dec. 23, 1971, as amended at 39 FR 9314, Mar 8, 1974]

**§ 60.7 Notification and record keeping.**

(a) Any owner or operator subject to the provisions of this part shall furnish the Administrator written notification as follows:

(1) A notification of the date construction (or reconstruction as defined under § 60.15) of an affected facility is commenced postmarked no later than 30 days after such date. This requirement shall not apply in the case of mass-produced facilities which are purchased in completed form.

(2) A notification of the anticipated date of initial startup of an affected facility postmarked not more than 60 days nor less than 30 days prior to such date.

(3) A notification of the actual date of initial startup of an affected facility postmarked within 15 days after such date.

(4) A notification of any physical or operational change to an existing facility which may increase the emission rate of any air pollutant to which a standard applies, unless that change is specifically exempted under an applicable subpart or in § 60.14(e). This notice shall be postmarked 60 days or as soon as practicable before the change is commenced and shall include information describing the precise nature of the change, present and proposed emission control systems, productive capacity of the facility before and after the change, and the expected completion date of the change. The Administrator may request additional relevant information subsequent to this notice.

(5) A notification of the date upon which demonstration of the continuous monitoring system performance commences in accordance with § 60.13(c). Notification shall be postmarked not less than 30 days prior to such date.

(b) Any owner or operator subject to the provisions of this part shall maintain records of the occurrence and duration of any startup, shutdown, or malfunction in the operation of an affected facility; any malfunction of the air pollution control equipment; or any periods during which a continuous monitoring system or monitoring device is inoperative.

(c) Each owner or operator required to install a continuous monitoring system shall submit a written report of excess emissions (as defined in applicable subparts) to the Administrator for every calendar quarter. All quarterly reports shall be postmarked by the 30th day following the end of each calendar quarter and shall include the following information:

(1) The magnitude of excess emissions computed in accordance with § 60.13(h), any conversion factor(s) used, and the date and time of commencement and completion of each time period of excess emissions.

(2) Specific identification of each period of excess emissions that occurs during startups, shutdowns, and malfunctions of the affected facility. The nature and cause of any malfunction (if known), the corrective action taken or preventative measures adopted.

(3) The date and time identifying each period during which the continuous monitoring system was inoperative except for zero and span checks and the nature of the system repairs or adjustments.

(4) When no excess emissions have occurred or the continuous monitoring system(s) have not been inoperative, repaired, or adjusted, such information shall be stated in the report.

(d) Any owner or operator subject to the provisions of this part shall maintain a file of all measurements, including continuous monitoring system, monitoring device, and performance testing measurements; all continuous monitoring system performance evaluations; all continuous monitoring system or monitoring device calibration checks; adjustments and maintenance performed on these systems or devices; and all other information required by this part recorded in a permanent form suitable for inspection. The file shall be retained for at least two years following the date of such measurements, maintenance, reports, and records.

(e) If notification substantially similar to that in paragraph (a) of this section is required by any other State or local agency, sending the Administrator a copy of that notification will satisfy the requirements of paragraph (a) of this section.

(Sec. 114, Clean Air Act as amended (42 U.S.C. 7414))

[36 FR 24877, Dec. 28, 1971, as amended at 40 FR 46254, Oct. 6, 1975; 40 FR 58418, Dec. 16, 1975; 43 FR 8800, Mar. 3, 1978; 45 FR 5617, Jan. 23, 1980]

**§ 60.8 Performance tests.**

(a) Within 60 days after achieving the maximum production rate at which the affected facility will be operated, but not later than 180 days after initial startup of such facility and at such other times as may be required by the Administrator under section 114 of the Act, the owner or operator of such facility shall conduct performance test(s) and furnish the Administrator a written report of the results of such performance test(s).

(b) Performance tests shall be conducted and data reduced in accordance with the test methods and procedures contained in each applicable subpart unless the Administrator (1) specifies or approves, in specific cases, the use of a reference method with minor changes in methodology, (2) approves the use of an equivalent method, (3) approves the use of an alternative method the results of which he has determined to be adequate for indicating whether a specific source is in compliance, or (4) waives the requirement for performance tests because the owner or operator of a source has demonstrated by other means to the Administrator's satisfaction that the affected facility is in compliance with the standard. Nothing in this paragraph shall be construed to abrogate the Administrator's authority to require testing under section 114 of the Act.

(c) Performance tests shall be conducted under such conditions as the Administrator shall specify to the plant operator based on representative performance of the affected facility. The owner or operator shall make available to the Administrator such re-

cords as may be necessary to determine the conditions of the performance tests. Operations during periods of startup, shutdown, and malfunction shall not constitute representative conditions for the purpose of a performance test nor shall emissions in excess of the level of the applicable emission limit during periods of startup, shutdown, and malfunction be considered a violation of the applicable emission limit unless otherwise specified in the applicable standard.

(d) The owner or operator of an affected facility shall provide the Administrator at least 30 days prior notice of any performance test, except as specified under other subparts, to afford the Administrator the opportunity to have an observer present.

(e) The owner or operator of an affected facility shall provide, or cause to be provided, performance testing facilities as follows:

(1) Sampling ports adequate for test methods applicable to such facility.

(2) Safe sampling platform(s).

(3) Safe access to sampling platform(s).

(4) Utilities for sampling and testing equipment.

(f) Unless otherwise specified in the applicable subpart, each performance test shall consist of three separate runs using the applicable test method. Each run shall be conducted for the time and under the conditions specified in the applicable standard. For the purpose of determining compliance with an applicable standard, the arithmetic means of results of the three runs shall apply. In the event that a sample is accidentally lost or conditions occur in which one of the three runs must be discontinued because of forced shutdown, failure of an irreplaceable portion of the sample train, extreme meteorological conditions, or other circumstances, beyond the owner or operator's control, compliance may, upon the Administrator's approval, be determined using the arithmetic mean of the results of the two other runs.

(Sec 114, Clean Air Act as amended (42 U.S.C. 7414))

[36 FR 24877, Dec. 23, 1971, as amended at 39 FR 9314, Mar. 8, 1974, 42 FR 57126, Nov. 1, 1977; 43 FR 8800, Mar 3, 1978; 44 FR 33612 June 11, 1979]

§ 6 Availability of information.

availability to the public of information provided to, or otherwise obtained by, the Administrator under this part shall be governed by Part 2 of this chapter. (Information submitted voluntarily to the Administrator for the purposes of §§ 60.5 and 60.6 is governed by § 2.201 through § 2.213 of this chapter and not by § 2.301 of this chapter.)

(Sec. 114, Clean Air Act as amended (42 U.S.C. 7414))

[41 FR 36918, Sept. 1, 1976, as amended at 43 FR 8800, Mar. 3, 1978]

§ 60.10 State authority.

The provisions of this part shall not be construed in any manner to preclude any State or political subdivision thereof from:

(a) Adopting and enforcing any emission standard or limitation applicable to an affected facility, provided that such emission standard or limitation is not less stringent than the standard applicable to such facility.

(b) Requiring the owner or operator of an affected facility to obtain permits, licenses, or approvals prior to initiating construction, modification, or operation of such facility.

(Sec. 116, Clean Air Act as amended (42 U.S.C. 7416))

[36 FR 24877, Dec. 23, 1971, as amended at 43 FR 8800, Mar. 3, 1978]

§ 60.11 Compliance with standards and maintenance requirements.

(a) Compliance with standards in this part, other than opacity standards, shall be determined only by performance tests established by § 60.8, unless otherwise specified in the applicable standard.

(b) Compliance with opacity standards in this part shall be determined by conducting observations in accordance with Reference Method 9 in Appendix A of this part or any alternative method that is approved by the Administrator. Opacity readings of portions of plumes which contain condensed, uncombined water vapor shall not be used for purposes of determining compliance with opacity standards. The results of continuous monitoring by transmissometer which indicate that the opacity at the time visual observations were made was not in excess of the standard are probative but not conclusive evidence of the actual opacity of an emission, provided that the source shall meet the burden of proving that the instrument used meets (at the time of the alleged violation) Performance Specification 1 in Appendix B of this part, has been properly maintained and (at the time of the alleged violation) calibrated, and that the resulting data have not been tampered with in any way.

(c) The opacity standards set forth in this part shall apply at all times except during periods of startup, shutdown, malfunction, and as otherwise provided in the applicable standard.

(d) At all times, including periods of startup, shutdown, and malfunction, owners and operators shall, to the extent practicable, maintain and operate any affected facility including associated air pollution control equipment in a manner consistent with good air pollution control practice for minimizing emissions. Determination of whether acceptable operating and maintenance procedures are being used will be based on information available to the Administrator which may include, but is not limited to, monitoring results, opacity observations, review of operating and maintenance procedures, and inspection of the source.

(e)(1) An owner or operator of an affected facility may request the Administrator to determine opacity of emissions from the affected facility during the initial performance tests required by § 60.8.

(2) Upon receipt from such owner or operator of the written report of the results of the performance tests required by § 60.8, the Administrator will make a finding concerning compliance with opacity and other applicable standards. If the Administrator finds that an affected facility is in compliance with all applicable standards for which performance tests are conducted in accordance with § 60.8 of this part but during the time such performance tests are being conducted fails to meet any applicable opacity standard, he shall notify the owner or operator and advise him that he may petition the Administrator within 10 days of receipt of notification to make appropriate adjustment to the opacity standard for the affected facility.

(3) The Administrator will grant such a petition upon a demonstration by the owner or operator that the affected facility and associated air pollution control equipment was operated and maintained in a manner to minimize the opacity of emissions during the performance tests; that the performance tests were performed under the conditions established by the Administrator; and that the affected facility and associated air pollution control equipment were incapable of being adjusted or operated to meet the applicable opacity standard.

(4) The Administrator will establish an opacity standard for the affected facility meeting the above requirements at a level at which the source will be able, as indicated by the performance and opacity tests, to meet the opacity standard at all times during which the source is meeting the mass or concentration emission standard. The Administrator will promulgate the new opacity standard in the FEDERAL REGISTER.

(Sec. 114, Clean Air Act as amended (42 U.S.C. 7414))

[38 FR 28565, Oct. 15, 1973, as amended at 39 FR 39873, Nov. 12, 1974; 42 FR 26206, May 23, 1977; 43 FR 8800, Mar. 3, 1978; 45 FR 23379, Apr. 4, 1980]

**§ 60.12 Circumvention.**

No owner or operator subject to the provisions of this part shall build, erect, install, or use any article, machine, equipment or process, the use of which conceals an emission which would otherwise constitute a violation of an applicable standard. Such concealment includes, but is not limited to, the use of gaseous diluents to achieve compliance with an opacity standard or with a standard which is based on the concentration of a pollutant in the gases discharged to the atmosphere.

[39 FR 9314, Mar. 8, 1974]

**§ 60.13 Monitoring requirements.**

(a) For the purposes of this section, all continuous monitoring systems required under applicable subparts shall be subject to the provisions of this section upon promulgation of performance specifications for continuous monitoring system under Appendix B to this part, unless:

(1) The continuous monitoring system is subject to the provisions of paragraphs (c)(2) and (c)(3) of this section, or

(2) otherwise specified in an applicable subpart or by the Administrator.

(b) All continuous monitoring systems and monitoring devices shall be installed and operational prior to conducting performance tests under § 60.8. Verification of operational status shall, as a minimum, consist of the following:

(1) For continuous monitoring systems referenced in paragraph (c)(1) of this section, completion of the conditioning period specified by applicable requirements in Appendix B.

(2) For continuous monitoring systems referenced in paragraph (c)(2) of this section, completion of seven days of operation.

(3) For monitoring devices referenced in applicable subparts, completion of the manufacturer's written requirements or recommendations for checking the operation or calibration of the device.

(c) During any performance tests required under § 60.8 or within 30 days thereafter and at such other times as may be required by the Administrator under section 114 of the Act, the owner or operator of any affected facility shall conduct continuous monitoring system performance evaluations and furnish the Administrator within 60 days thereof two or, upon request, more copies of a written report of the results of such tests. These continuous monitoring system performance evaluations shall be conducted in accordance with the following specifications and procedures:

(1) Continuous monitoring systems listed within this paragraph except as provided in paragraph (c)(2) of this section shall be evaluated in accordance with the requirements and procedures contained in the applicable performance specification of Appendix B as follows:

(i) Continuous monitoring systems for measuring opacity of emissions shall comply with Performance Specification 1.

(ii) Continuous monitoring systems for measuring nitrogen oxides emissions shall comply with Performance Specification 2.

(iii) Continuous monitoring systems for measuring sulfur dioxide emissions shall comply with Performance Specification 2.

(iv) Continuous monitoring systems for measuring the oxygen content or carbon dioxide content of effluent gases shall comply with Performance Specification 3.

(2) An owner or operator who, prior to September 11, 1974, entered into a binding contractual obligation to purchase specific continuous monitoring system components except as referenced by paragraph (c)(2)(iii) of this section shall comply with the following requirements:

(i) Continuous monitoring systems for measuring opacity of emissions shall be capable of measuring emission levels within ±20 percent with a confidence level of 95 percent. The Calibration Error Test and associated calculation procedures set forth in Performance Specification 1 of Appendix B shall be used for demonstrating compliance with this specification.

(ii) Continuous monitoring systems for measurement of nitrogen oxides or sulfur dioxide shall be capable of measuring emission levels within ±20 percent with a confidence level of 95 percent. The Calibration Error Test, the Field Test for Accuracy (Relative), and associated operating and calculation procedures set forth in Performance Specification 2 of Appendix B shall be used for demonstrating compliance with this specification.

(iii) Owners or operators of all continuous monitoring systems installed on an affected facility prior to October 6, 1975 are not required to conduct tests under paragraphs (c)(2)(i) and/or (ii) of this section unless requested by the Administrator.

(3) All continuous monitoring systems referenced by paragraph (c)(2) of this section shall be upgraded or replaced (if necessary) with new continuous monitoring systems, and the new or improved systems shall be demonstrated to comply with applicable performance specifications under paragraph (c)(1) of this section on or before September 11, 1979.

(d) Owners or operators of all continuous monitoring systems installed in accordance with the provisions of this part shall check the zero and span drift at least once daily in accordance with the method prescribed by the manufacturer of such systems unless the manufacturer recommends adjustments at shorter intervals, in which case such recommendations shall be followed. The zero and span shall, as a minimum, be adjusted whenever the 24-hour zero drift or 24-hour calibration drift limits of the applicable performance specifications in Appendix B are exceeded. For continuous monitoring systems measuring opacity of emissions, the optical surfaces exposed to the effluent gases shall be cleaned prior to performing the zero or span drift adjustments except that for systems using automatic zero adjustments, the optical surfaces shall be cleaned when the cumulative automatic zero compensation exceeds four percent opacity. Unless otherwise approved by the Administrator, the following procedures, as applicable, shall be followed:

(1) For extractive continuous monitoring systems measuring gases, minimum procedures shall include introducing applicable zero and span gas mixtures into the measurement system as near the probe as is practical. Span and zero gases certified by their manufacturer to be traceable to National Bureau of Standards reference gases shall be used whenever these reference gases are available. The span and zero gas mixtures shall be the same composition as specified in Appendix B of this part. Every six months from date of manufacture, span and zero gases shall be reanalyzed by conducting triplicate analyses with Reference Methods 6 for $SO_2$, 7 for $NO_x$, and 3 for $O_2$ and $CO_2$, respectively. The gases may be analyzed at less frequent intervals if longer shelf lives are guaranteed by the manufacturer.

(2) For non-extractive continuous monitoring systems measuring gases, minimum procedures shall include upscale check(s) using a certified calibration gas cell or test cell which is functionally equivalent to a known gas concentration. The zero check may be performed by computing the zero value from upscale measurements or by mechanically producing a zero condition.

(3) For continuous monitoring systems measuring opacity of emissions, minimum procedures shall include a method for producing a simulated zero opacity condition and an upscale (span) opacity condition using a certified neutral density filter or other related technique to produce a known obscuration of the light beam. Such procedures shall provide a system check of the analyzer internal optical surfaces and all electronic circuitry including the lamp and photodetector assembly.

(e) Except for system breakdowns, repairs, calibration checks, and zero and span adjustments required under

paragraph (d) of this section, all continuous monitoring systems shall be in continuous operation and shall meet minimum frequency of operation requirements as follows:

(1) All continuous monitoring systems referenced by paragraphs (c)(1) and (c)(2) of this section for measuring opacity of emissions shall complete a minimum of one cycle of sampling and analyzing for each successive ten-second period and one cycle of data recording for each successive six-minute period.

(2) All continuous monitoring systems referenced by paragraph (c)(1) of this section for measuring oxides of nitrogen, sulfur dioxide, carbon dioxide, or oxygen shall complete a minimum of one cycle of operation (sampling, analyzing, and data recording) for each successive 15-minute period.

(3) All continuous monitoring systems referenced by paragraph (c)(2) of this section, except opacity, shall complete a minimum of one cycle of operation (sampling, analyzing, and data recording) for each successive one-hour period.

(f) All continuous monitoring systems or monitoring devices shall be installed such that representative measurements of emissions or process parameters from the affected facility are obtained. Additional procedures for location of continuous monitoring systems contained in the applicable Performance Specifications of Appendix B of this part shall be used.

(g) When the effluents from a single affected facility or two or more affected facilities subject to the same emission standards are combined before being released to the atmosphere, the owner or operator may install applicable continuous monitoring systems on each effluent or on the combined effluent. When the affected facilities are not subject to the same emission standards, separate continuous monitoring systems shall be installed on each effluent. When the effluent from one affected facility is released to the atmosphere through more than one point, the owner or operator shall install applicable continuous monitoring systems on each separate effluent unless the installation of fewer systems is approved by the Administrator.

(h) Owners or operators of all continuous monitoring systems for measurement of opacity shall reduce all data to six-minute averages and for systems other than opacity to one-hour averages for time periods under § 60.2 (x) and (r) respectively. Six-minute opacity averages shall be calculated from 24 or more data points equally spaced over each six-minute period. For systems other than opacity, one-hour averages shall be computed from four or more data points equally spaced over each one-hour period. Data recorded during periods of system breakdowns, repairs, calibration checks, and zero and span adjustments shall not be included in the data averages computed under this paragraph. An arithmetic or integrated average of all data may be used. The data output of all continuous monitoring systems may be recorded in reduced or nonreduced form (e.g. ppm pollutant and percent $O_2$ or lb/million Btu of pollutant). All excess emissions shall be converted into units of the standard using the applicable conversion procedures specified in subparts. After conversion into units of the standard, the data may be rounded to the same number of significant digits used in subparts to specify the applicable standard (e.g., rounded to the nearest one percent opacity).

(i) After receipt and consideration of written application, the Administrator may approve alternatives to any monitoring procedures or requirements of this part including, but not limited to the following:

(1) Alternative monitoring requirements when installation of a continuous monitoring system or monitoring device specified by this part would not provide accurate measurements due to liquid water or other interferences caused by substances with the effluent gases.

(2) Alternative monitoring requirements when the affected facility is infrequently operated.

(3) Alternative monitoring requirements to accommodate continuous monitoring systems that require additional measurements to correct for stack moisture conditions.

(4) Alternative locations for installing continuous monitoring systems or monitoring devices when the owner or operator can demonstrate that installation at alternate locations will enable accurate and representative measurements.

(5) Alternative methods of converting pollutant concentration measurements to units of the standards.

(6) Alternative procedures for performing daily checks of zero and span drift that do not involve use of span gases or test cells.

(7) Alternatives to the A.S.T.M. test methods or sampling procedures specified by any subpart.

(8) Alternative continuous monitoring systems that do not meet the design or performance requirements in Performance Specification 1, Appendix B, but adequately demonstrate a definite and consistent relationship between its measurements and the measurements of opacity by a system complying with the requirements in Performance Specification 1. The Administrator may require that such demonstration be performed for each affected facility.

(9) Alternative monitoring requirements when the effluent from a single affected facility or the combined effluent from two or more affected facilities are released to the atmosphere through more than one point.

(Sec. 114, Clean Air Act as amended (42 U.S.C. 7414))

[40 FR 46255, Oct. 6, 1975; 40 FR 59205, Dec. 22, 1975, as amended at 41 FR 35185, Aug. 20, 1976; 42 FR 5936, Jan. 31, 1977; 43 FR 7572, Feb. 23, 1978; 43 FR 8800 Mar. 3, 1978]

### § 60.14 Modification.

(a) Except as provided under paragraphs (e) and (f) of this section, any physical or operational change to an existing facility which results in an increase in the emission rate to the atmosphere of any pollutant to which a standard applies shall be considered a modification within the meaning of section 111 of the Act. Upon modification, an existing facility shall become an affected facility for each pollutant to which a standard applies and for which there is an increase in the emission rate to the atmosphere.

(b) Emission rate shall be expressed as kg/hr of any pollutant discharged into the atmosphere for which a standard is applicable. The Administrator shall use the following to determine emission rate:

(1) Emission factors as specified in the latest issue of "Compilation of Air Pollutant Emission Factors," EPA Publication No. AP-42, or other emission factors determined by the Administrator to be superior to AP-42 emission factors, in cases where utilization of emission factors demonstrate that the emission level resulting from the physical or operational change will either clearly increase or clearly not increase.

(2) Material balances, continuous monitor data, or manual emission tests in cases where utilization of emission factors as referenced in paragraph (b)(1) of this section does not demonstrate to the Administrator's satisfaction whether the emission level resulting from the physical or operational change will either clearly increase or clearly not increase, or where an owner or operator demonstrates to the Administrator's satisfaction that there are reasonable grounds to dispute the result obtained by the Administrator utilizing emission factors as referenced in paragraph (b)(1) of this section. When the emission rate is based on results from manual emission tests or continuous monitoring systems, the procedures specified in Appendix C of this part shall be used to determine whether an increase in emission rate has occurred. Tests shall be conducted under such conditions as the Administrator shall specify to the owner or operator based on representative performance of the facility. At least three valid test runs must be conducted before and at least three after the

physical or operational change. All operating parameters which may affect emissions must be held constant to the maximum feasible degree for all test runs.

(c) The addition of an affected facility to a stationary source as an expansion to that source or as a replacement for an existing facility shall not by itself bring within the applicability of this part any other facility within that source.

(d) [Reserved]

(e) The following shall not, by themselves, be considered modifications under this part:

(1) Maintenance, repair, and replacement which the Administrator determines to be routine for a source category, subject to the provisions of paragraph (c) of this section and § 60.15.

(2) An increase in production rate of an existing facility if that increase can be accomplished without a capital expenditure on that facility.

(3) An increase in the hours of operation.

(4) Use of an alternative fuel or raw material if, prior to the date any standard under this part becomes applicable to that source type, as provided by § 60.1, the existing facility was designed to accommodate that alternative use. A facility shall be considered to be designed to accommodate an alternative fuel or raw material if that use could be accomplished under the facility's construction specifications as amended prior to the change. Conversion to coal required for energy considerations, as specified in section 111(a)(8) of the Act, shall not be considered a modification.

(5) The addition or use of any system or device whose primary function is the reduction of air pollutants, except when an emission control system is removed or is replaced by a system which the Administrator determines to be less environmentally beneficial.

(6) The relocation or change in ownership of an existing facility.

(f) Special provisions set forth under an applicable subpart of this part shall supersede any conflicting provisions of this section.

(g) Within 180 days of the completion of any physical or operational change subject to the control measures specified in paragraph (a) of this section, compliance with all applicable standards must be achieved.

[40 FR 58419, Dec. 16, 1975, amended at 43 FR 34347, Aug. 3, 1978; 45 FR 5617, Jan 23, 1980]

## Subpart G—Standards of Performance for Nitric Acid Plants

### § 60.70 Applicability and designation of affected facility.

(a) The provisions of this subpart are applicable to each nitric acid production unit, which is the affected facility.

(b) Any facility under paragraph (a) of this section that commences construction or modification after August 17, 1971, is subject to the requirements of this subpart.

(Secs. 111 and 301(a) of the Clean Air Act, sec. 4(a) of Pub. L. 91-604, 84 Stat. 1683, sec. 2 of Pub. L. 90-148, 81 Stat 504 (42 U.S.C. 1857c-6, 1857g(a)))

[42 FR 37936, July 25, 1977]

### § 60.71 Definitions.

As used in this subpart, all terms not defined herein shall have the meaning given them in the Act and in Subpart A of this part.

(a) "Nitric acid production unit" means any facility producing weak nitric acid by either the pressure or atmospheric pressure process.

(b) "Weak nitric acid" means acid which is 30 to 70 percent in strength.

### § 60.72 Standard for nitrogen oxides.

(a) On and after the date on which the performance test required to be conducted by § 60.8 is completed, no owner or operator subject to the provisions of this subpart shall cause to be discharged into the atmosphere from any affected facility any gases which:

(1) Contain nitrogen oxides, expressed as $NO_2$, in excess of 1.5 kg per metric ton of acid produced (3.0 lb per ton), the production being expressed as 100 percent nitric acid.

(2) Exhibit 10 percent opacity, or greater.

[39 FR 20794, June 14, 1974, as amended at 40 FR 46258, Oct. 6, 1975]

### § 60.73 Emission monitoring.

(a) A continuous monitoring system for the measurement of nitrogen oxides shall be installed, calibrated, maintained, and operated by the owner or operator. The pollutant gas used to prepare calibration gas mixtures under paragraph 2.1, Performance Specification 2 and for calibration checks under § 60.13(d) to this part, shall be nitrogen dioxide ($NO_2$). The span shall be set at 500 ppm of nitrogen dioxide. Reference Method 7 shall be used for conducting monitoring system performance evaluations under § 60.13(c).

(b) The owner or operator shall establish a conversion factor for the purpose of converting monitoring data into units of the applicable standard (kg/metric ton, lb/short ton). The conversion factor shall be established by measuring emissions with the continuous monitoring system concurrent with measuring emissions with the applicable reference method tests. Using only that portion of the continuous monitoring emission data that represents emission measurements concurrent with the reference method test periods, the conversion factor shall be determined by dividing the reference method test data averages by the monitoring data averages to obtain a ratio expressed in units of the applicable standard to units of the monitoring data, i.e., kg/metric ton per ppm (lb/short ton per ppm). The conversion factor shall be reestablished during any performance test under § 60.8 or any continuous monitoring system performance evaluation under § 60.13(c).

(c) The owner or operator shall record the daily production rate and hours of operation.

(d) [Reserved]

(e) For the purpose of reports required under § 60.7(c), periods of excess emissions that shall be reported are defined as any 3-hour period during which the average nitrogen oxides emissions (arithmetic average of three contiguous 1-hour periods) as measured by a continuous monitoring system exceed the standard under § 60.72(a).

(Sec. 114, Clean Air Act as amended (42 U.S.C. 7414))

[39 FR 20794, June 14, 1974, as amended at 40 FR 46258, Oct. 6, 1975; 43 FR 8800, Mar 3, 1978]

### § 60.74 Test methods and procedures.

(a) The reference methods in Appendix A to this part, except as provided for in § 60.8(b), shall be used to determine compliance with the standard prescribed in § 60.72 as follows:

(1) Method 7 for the concentration of $NO_x$;

(2) Method 1 for sample and velocity traverses;

(3) Method 2 for velocity and volumetric flow rate; and

(4) Method 3 for gas analysis.

(b) For Method 7, the sample site shall be selected according to Method 1 and the sampling point shall be the centroid of the stack or duct or at a point no closer to the walls than 1 m (3.28 ft). Each run shall consist of at least four grab samples taken at approximately 15-minute intervals. The arithmetic mean of the samples shall constitute the run value. A velocity traverse shall be performed once per run.

(c) Acid production rate, expressed in metric tons per hour of 100 percent nitric acid, shall be determined during each testing period by suitable methods and shall be confirmed by a material balance over the production system.

(d) For each run, nitrogen oxides, expressed in g/metric ton of 100 percent nitric acid, shall be determined by dividing the emission rate in g/hr by the acid production rate. The emission rate shall be determined by the equation,

$$g/hr = Q_s \times c$$

where $Q_s$ = volumetric flow rate of the effluent in dscm/hr, as determined in accordance with paragraph (a)(3) of this section, and $c = NO_x$ concentration in g/dscm, as determined in accordance with paragraph (a)(1) of this section.

(Sec. 114, Clean Air Act as amended (42 U.S.C. 7414))

[39 FR 20794, June 14, 1974, as amended at 43 FR 8800, Mar. 3, 1978]

## Subpart H—Standards of Performance for Sulfuric Acid Plants

### § 60.80 Applicability and designation of affected facility.

(a) The provisions of this subpart are applicable to each sulfuric acid production unit, which is the affected facility.

(b) Any facility under paragraph (a) of this section that commences construction or modification after August 17, 1971, is subject to the requirements of this subpart.

(Secs. 111 and 301(a) of the Clean Air Act; sec. 4(a) of Pub. L. 91-604, 84 Stat. 1683; sec. 2 of Pub. L. 90-148, 81 Stat. 504 (42 U.S.C. 1857c-6, 1857g(a)))

[42 FR 37936, July 25, 1977]

### § 60.81 Definitions.

As used in this subpart, all terms not defined herein shall have the meaning given them in the Act and in Subpart A of this part.

(a) "Sulfuric acid production unit" means any facility producing sulfuric acid by the contact process by burning elemental sulfur, alkylation acid, hydrogen sulfide, organic sulfides and mercaptans, or acid sludge, but does not include facilities where conversion to sulfuric acid is utilized primarily as a means of preventing emissions to the atmosphere of sulfur dioxide or other sulfur compounds.

(b) "Acid mist" means sulfuric acid mist, as measured by Method 8 of Appendix A to this part or an equivalent or alternative method.

[36 FR 24877, Dec. 23, 1971, as amended at 39 FR 20794, June 14, 1974]

### § 60.82 Standard for sulfur dioxide.

(a) On and after the date on which the performance test required to be conducted by § 60.8 is completed, no owner or operator subject to the provisions of this subpart shall cause to be discharged into the atmosphere from any affected facility any gases which contain sulfur dioxide in excess of 2 kg per metric ton of acid produced (4 lb per ton), the production being expressed as 100 percent $H_2SO_4$.

[39 FR 20794, June 14, 1974]

### § 60.83 Standard for acid mist.

(a) On and after the date on which the performance test required to be conducted by § 60.8 is completed, no owner or operator subject to the provisions of this subpart shall cause to be discharged into the atmosphere from any affected facility any gases which:

(1) Contain acid mist, expressed as $H_2SO_4$, in excess of 0.075 kg per metric ton of acid produced (0.15 lb per ton), the production being expressed as 100 percent $H_2SO_4$.

(2) Exhibit 10 percent opacity, or greater.

[39 FR 20794, June 14, 1974, as amended at 40 FR 46258, Oct. 6, 1975]

### § 60.84 Emission monitoring.

(a) A continuous monitoring system for the measurement of sulfur dioxide shall be installed, calibrated, maintained, and operated by the owner or operator. The pollutant gas used to prepare calibration gas mixtures under paragraph 2.1, Performance Specification 2 and for calibration checks under § 60.13(d), shall be sulfur dioxide ($SO_2$). Reference Method 8 shall be used for conducting monitoring system performance evaluations under § 60.13(c) except that only the sulfur dioxide portion of the Method 8 results shall be used. The span shall be set at 1000 ppm of sulfur dioxide.

(b) The owner or operator shall establish a conversion factor for the purpose of converting monitoring data into units of the applicable standard (kg/metric ton, lb/short ton). The conversion factor shall be determined, as a minimum, three times daily by measuring the concentration of sulfur dioxide entering the converter using suitable methods (e.g., the Reich test, National Air Pollution Control Administration Publication No. 999-AP-13) and calculating the appropriate conversion factor for each eight-hour period as follows:

$$CF = k[1.000 - 0.015r/r - s]$$

where:

CF = conversion factor (kg/metric ton per ppm, lb/short ton per ppm).

k = constant derived from material balance. For determining CF in metric units, k = 0.0653. For determining CF in English units, k = 0.1306

r = percentage of sulfur dioxide by volume entering the gas converter. Appropriate corrections must be made for air injection plants subject to the Administrator's approval.

s = percentage of sulfur dioxide by volume in the emissions to the atmosphere determined by the continuous monitoring system required under paragraph (a) of this section.

(c) The owner or operator shall record all conversion factors and values under paragraph (b) of this section from which they were computed (i.e., CF, r, and s).

(d) [Reserved]

(e) For the purpose of reports under § 60.7(c), periods of excess emissions shall be all three-hour periods (or the arithmetic average of three consecutive one-hour periods) during which the integrated average sulfur dioxide emissions exceed the applicable standards under § 60.82.

(Sec. 114, Clean Air Act as amended (42 U.S.C. 7414))

[39 FR 20794, June 14, 1974, as amended at 40 FR 46258, Oct. 6, 1975, 43 FR 8800, Mar. 3, 1978]

### § 60.85 Test methods and procedures.

(a) The reference methods in Appendix A to this part, except as provided for in § 60.8(b), shall be used to determine compliance with the standards prescribed in §§ 60.82 and 60.83 as follows:

(1) Method 8 for the concentrations of $SO_2$ and acid mist;

(2) Method 1 for sample and velocity traverses;

(3) Method 2 for velocity and volumetric flow rate; and

(4) Method 3 for gas analysis.

(b) The moisture content can be considered to be zero. For Method 8 the sampling time for each run shall be at least 60 minutes and the minimum sample volume shall be 1.15 dscm (40.6 dscf) except that smaller sampling times or sample volumes, when necessitated by process variables or other factors, may be approved by the Administrator.

(c) Acid production rate, expressed in metric tons per hour of 100 percent $H_2SO_4$, shall be determined during each testing period by suitable methods and shall be confirmed by a material balance over the production system.

(d) Acid mist and sulfur dioxide emissions, expressed in g/metric ton of 100 percent $H_2SO_4$, shall be determined by dividing the emission rate in g/hr by the acid production rate. The emission rate shall be determined by the equation, $g/hr = Q_s \times c$, where $Q_s$ = volumetric flow rate of the effluent in dscm/hr as determined in accordance with paragraph (a)(3) of this section, and c = acid mist and $SO_2$ concentrations in g/dscm as determined in accordance with paragraph (a)(1) of this section.

(Sec. 114, Clean Air Act as amended (42 U.S.C. 7414))

[39 FR 20794, June 14, 1974, as amended at 43 FR 8800, Mar. 3, 1978]

## Subpart P—Standards of Performance for Primary Copper Smelters

SOURCE: 41 FR 2338, Jan. 15, 1976, unless otherwise noted.

### § 60.160 Applicability and designation of affected facility.

(a) The provisions of this subpart are applicable to the following affected facilities in primary copper smelters: Dryer, roaster, smelting furnace, and copper converter.

(b) Any facility under paragraph (a) of this section that commences construction or modification after October 16, 1974, is subject to the requirements of this subpart.

(Secs. 111 and 301(a), of the Clean Air Act; sec. 4(a) of Pub. L. 91-604, 84 Stat. 1683; sec. 2 of Pub. L. 90-148, 81 Stat. 504 (42 U.S.C. 1857c-6, 1857g(a)))

[42 FR 37937, July 25, 1977]

### § 60.161 Definitions.

As used in this subpart, all terms not defined herein shall have the meaning given them in the Act and in Subpart A of this part.

(a) "Primary copper smelter" means any installation or any intermediate process engaged in the production of copper from copper sulfide ore concentrates through the use of pyrometallurgical techniques.

(b) "Dryer" means any facility in which a copper sulfide ore concentrate charge is heated in the presence of air to eliminate a portion of the moisture from the charge, provided less than 5 percent of the sulfur contained in the charge is eliminated in the facility.

(c) "Roaster" means any facility in which a copper sulfide ore concentrate charge is heated in the presence of air to eliminate a significant portion (5 percent or more) of the sulfur contained in the charge.

(d) "Calcine" means the solid materials produced by a roaster.

(e) "Smelting" means processing techniques for the melting of a copper sulfide ore concentrate or calcine charge leading to the formation of separate layers of molten slag, molten copper, and/or copper matte.

(f) "Smelting furnace" means any vessel in which the smelting of copper sulfide ore concentrates or calcines is performed and in which the heat necessary for smelting is provided by an electric current, rapid oxidation of a portion of the sulfur contained in the concentrate as it passes through an oxidizing atmosphere, or the combustion of fossil fuel.

(g) "Copper converter" means any vessel to which copper matte is charged and oxidized to copper.

(h) "Sulfuric acid plant" means any facility producing sulfuric acid by the contact process.

(i) "Fossil fuel" means natural gas, petroleum, coal, and any form of solid, liquid, or gaseous fuel derived from such materials for the purpose of creating useful heat.

(j) "Reverberatory smelting furnace" means any vessel in which the smelting of copper sulfide ore concentrates or calcines is performed and in which the heat necessary for smelting is provided primarily by combustion of a fossil fuel.

(k) "Total smelter charge" means the weight (dry basis) of all copper sulfide ore concentrates processed at a primary copper smelter, plus the weight of all other solid materials introduced into the roasters and smelting furnaces at a primary copper smelter, except calcine, over a one-month period.

(l) "High level of volatile impurities" means a total smelter charge containing more than 0.2 weight percent arsenic, 0.1 weight percent antimony, 4.5 weight percent lead or 5.5 weight percent zinc, on a dry basis.

### § 60.162 Standard for particulate matter.

(a) On and after the date on which the performance test required to be conducted by § 60.8 is completed, no owner or operator subject to the provisions of this subpart shall cause to be discharged into the atmosphere from any dryer any gases which contain particulate matter in excess of 50 mg/dscm (0.022 gr/dscf).

### § 60.163 Standard for sulfur dioxide.

(a) On and after the date on which the performance test required to be conducted by § 60.8 is completed, no owner or operator subject to the provisions of this subpart shall cause to be discharged into the atmosphere from any roaster, smelting furnace, or copper converter any gases which contain sulfur dioxide in excess of 0.065 percent by volume, except as provided in paragraphs (b) and (c) of this section.

(b) Reverberatory smelting furnaces shall be exempted from paragraph (a) of this section during periods when the total smelter charge at the primary copper smelter contains a high level of volatile impurities.

(c) A change in the fuel combusted in a reverberatory smelting furnace shall not be considered a modification under this part.

### § 60.164 Standard for visible emissions.

(a) On and after the date on which the performance test required to be conducted by § 60.8 is completed, no owner or operator subject to the provisions of this subpart shall cause to be discharged into the atmosphere from any dryer any visible emissions which exhibit greater than 20 percent opacity.

(b) On and after the date on which the performance test required to be conducted by § 60.8 is completed, no owner or operator subject to the provisions of this subpart shall cause to be discharged into the atmosphere from any affected facility that uses a sulfuric acid plant to comply with the standard set forth in § 60.163, any visible emissions which exhibit greater than 20 percent opacity.

### § 60.165 Monitoring of operations.

(a) The owner or operator of any primary copper smelter subject to § 60.163 (b) shall keep a monthly record of the total smelter charge and the weight percent (dry basis) of arsenic, antimony, lead and zinc contained in this charge. The analytical methods and procedures employed to determine the weight of the total smelter charge and the weight percent of arsenic, antimony, lead and zinc shall be approved by the Administrator and shall be accurate to within plus or minus ten percent.

(b) The owner or operator of any primary copper smelter subject to the provisions of this subpart shall install and operate:

(1) A continuous monitoring system to monitor and record the opacity of gases discharged into the atmosphere from any dryer. The span of this system shall be set at 80 to 100 percent opacity.

(2) A continuous monitoring system to monitor and record sulfur dioxide emissions discharged into the atmosphere from any roaster, smelting furnace or copper converter subject to § 60.163 (a). The span of this system shall be set at a sulfur dioxide concentration of 0.20 percent by volume.

(i) The continuous monitoring system performance evaluation required under § 60.13(c) shall be completed prior to the initial performance test required under § 60.8. During the performance evaluation, the span of the continuous monitoring system

may be set at a sulfur dioxide concentration of 0.15 percent by volume if necessary to maintain the system output between 20 percent and 90 percent of full scale. Upon completion of the continuous monitoring system performance evaluation, the span of the continuous monitoring system shall be set at a sulfur dioxide concentration of 0.20 percent by volume.

(ii) For the purpose of the continuous monitoring system performance evaluation required under § 60.13(c) the reference method referred to under the Field Test for Accuracy (Relative) in Performance Specification 2 of Appendix B to this part shall be Reference Method 6. For the performance evaluation, each concentration measurement shall be of one hour duration. The pollutant gas used to prepare the calibration gas mixtures required under paragraph 2.1, Performance Specification 2 of Appendix B, and for calibration checks under § 60.13 (d), shall be sulfur dioxide.

(c) Six-hour average sulfur dioxide concentrations shall be calculated and recorded daily for the four consecutive 6-hour periods of each operating day. Each six-hour average shall be determined as the arithmetic mean of the appropriate six contiguous one-hour average sulfur dioxide concentrations provided by the continuous monitoring system installed under paragraph (b) of this section.

(d) For the purpose of reports required under § 60.7(c), periods of excess emissions that shall be reported are defined as follows:

(1) Opacity. Any six-minute period during which the average opacity, as measured by the continuous monitoring system installed under paragraph (b) of this section, exceeds the standard under § 60.164(a).

(2) Sulfur dioxide. All six-hour periods during which the average emissions of sulfur dioxide, as measured by the continuous monitoring system installed under § 60.163, exceed the level of the standard. The Administrator will not consider emissions in excess of the level of the standard for less than or equal to 1.5 percent of the six-hour periods during the quarter as indicative of a potential violation of § 60.11(d) provided the affected facility, including air pollution control equipment, is maintained and operated in a manner consistent with good air pollution control practice for minimizing emissions during these periods. Emissions in excess of the level of the standard during periods of startup, shutdown, and malfunction are not to be included within the 1.5 percent.

(Sec 114, Clean Air Act as amended (42 U.S.C. 7414))

[41 FR 2338, Jan 15, 1976, 41 FR 8346, Feb 26, 1976, as amended at 42 FR 57126, Nov 1, 1977, 43 FR 8800, Mar 3, 1978]

### § 60.166 Test methods and procedures

(a) The reference methods in Appendix A to this part, except as provided for in § 60.8(b), shall be used to determine compliance with the standards prescribed in §§ 60.162, 60.163 and 60.164 as follows:

(1) Method 5 for the concentration of particulate matter and the associated moisture content.

(2) Sulfur dioxide concentrations shall be determined using the continuous monitoring system installed in accordance with § 60.165(b). One 6-hour average period shall constitute one run. The monitoring system drift during any run shall not exceed 2 percent of span.

(b) For Method 5, Method 1 shall be used for selecting the sampling site and the number of traverse points, Method 2 for determining velocity and volumetric flow rate and Method 3 for determining the gas analysis. The sampling time for each run shall be at least 60 minutes and the minimum sampling volume shall be 0.85 dscm (30 dscf) except that smaller times or volumes, when necessitated by process variables or other factors, may be approved by the Administrator.

(Sec 114, Clean Air Act as amended (42 U.S.C 7414))

[41 FR 2338, Jan 15, 1976, as amended at 43 FR 8800, Mar. 3, 1978]

## Subpart Q—Standards of Performance for Primary Zinc Smelters

SOURCE 41 FR 2340, Jan. 15, 1976, unless otherwise noted.

### § 60.170 Applicability and designation of affected facility.

(a) The provisions of this subpart are applicable to the following affected facilities in primary zinc smelters: roaster and sintering machine.

(b) Any facility under paragraph (a) of this section that commences construction or modification after October 16, 1974, is subject to the requirements of this subpart.

(Secs. 111, 301(a), Clean Air Act, sec. 4(a) of Pub. L. 91-604, 84 Stat. 1683, sec. 2 of Pub. L. 90-148, 81 Stat. 504 (42 U.S.C. 1857c-6, 1857g(a)))

[42 FR 37937, July 25, 1977]

### § 60.171 Definitions.

As used in this subpart, all terms not defined herein shall have the meaning given them in the Act and in Subpart A of this part.

(a) "Primary zinc smelter" means any installation engaged in the production, or any intermediate process in the production, of zinc or zinc oxide from zinc sulfide ore concentrates through the use of pyrometallurgical techniques.

(b) "Roaster" means any facility in which a zinc sulfide ore concentrate charge is heated in the presence of air to eliminate a significant portion (more than 10 percent) of the sulfur contained in the charge.

(c) "Sintering machine" means any furnace in which calcines are heated in the presence of air to agglomerate the calcines into a hard porous mass called "sinter."

(d) "Sulfuric acid plant" means any facility producing sulfuric acid by the contact process.

### § 60.172 Standard for particulate matter.

(a) On and after the date on which the performance test required to be conducted by § 60.8 is completed, no owner or operator subject to the provisions of this subpart shall cause to be discharged into the atmosphere from any sintering machine any gases which contain particulate matter in excess of 50 mg/dscm (0.022 gr/dscf).

### § 60.173 Standard for sulfur dioxide.

(a) On and after the date on which the performance test required to be conducted by § 60.8 is completed, no owner or operator subject to the provisions of this subpart shall cause to be discharged into the atmosphere from any roaster any gases which contain sulfur dioxide in excess of 0.065 percent by volume.

(b) Any sintering machine which eliminates more than 10 percent of the sulfur initially contained in the zinc sulfide ore concentrates will be considered as a roaster under paragraph (a) of this section.

### § 60.174 Standard for visible emissions.

(a) On and after the date on which the performance test required to be conducted by § 60.8 is completed, no owner or operator subject to the provisions of this subpart shall cause to be discharged into the atmosphere from any sintering machine any visible emissions which exhibit greater than 20 percent opacity.

(b) On and after the date on which the performance test required to be conducted by § 60.8 is completed, no owner or operator subject to the provisions of this subpart shall cause to be discharged into the atmosphere from any affected facility that uses a sulfuric acid plant to comply with the standard set forth in § 60.173, any visible emissions which exhibit greater than 20 percent opacity.

### § 60.175 Monitoring of operations.

(a) The owner or operator of any primary zinc smelter subject to the provisions of this subpart shall install and operate:

(1) A continuous monitoring system to monitor and record the opacity of gases discharged into the atmosphere from any sintering machine. The span of this system shall be set at 80 to 100 percent opacity.

(2) A continuous monitoring system to monitor and record sulfur dioxide emissions discharged into the atmosphere from any roaster subject to § 60.173. The span of this system shall be set at a sulfur dioxide concentration of 0.20 percent by volume.

(i) The continuous monitoring system performance evaluation required under § 60.13(c) shall be completed prior to the initial performance test required under § 60.8. During the performance evaluation, the span of the continuous monitoring system may be set at a sulfur dioxide concentration of 0.15 percent by volume if necessary to maintain the system output between 20 percent and 90 percent of full scale. Upon completion of the continuous monitoring system performance evaluation, the span of the continuous monitoring system shall be set at a sulfur dioxide concentration of 0.20 percent by volume.

(ii) For the purpose of the continuous monitoring system performance evaluation required under § 60.13(c), the reference method referred to under the Field Test for Accuracy (Relative) in Performance Specification 2 of Appendix B to this part shall be Reference Method 6. For the performance evaluation, each concentration measurement shall be of 1 hour duration. The pollutant gas used to prepare the calibration gas mixtures required under paragraph 2.1, Performance Specification 2 of Appendix B, and for calibration checks under § 60.13(d), shall be sulfur dioxide.

(b) Two-hour average sulfur dioxide concentrations shall be calculated and recorded daily for the 12 consecutive 2-hour periods of each operating day. Each 2-hour average shall be determined as the arithmetic mean of the appropriate two contiguous 1-hour average sulfur dioxide concentrations provided by the continuous monitoring system installed under paragraph (a) of this section.

(c) For the purpose of reports required under § 60.7(c), periods of excess emissions that shall be reported are defined as follows:

(1) Opacity. Any 6-minute period during which the average opacity, as measured by the continuous monitoring system installed under paragraph (a) of this section, exceeds the standard under § 60.174(a).

(2) Sulfur dioxide. Any 2-hour period, as described in paragraph (b) of this section, during which the average emissions of sulfur dioxide, as measured by the continuous monitoring system installed under paragraph (a) of this section, exceeds the standard under § 60.173.

(Sec. 114, Clean Air Act as amended (42 U.S.C. 7414))

[41 FR 2340, Jan. 15, 1976, as amended at 43 FR 8800, Mar. 3, 1978]

### § 60.176 Test methods and procedures.

(a) The reference methods in Appendix A to this part, except as provided for in § 60.8(b), shall be used to determine compliance with the standards prescribed in §§ 60.172, 60.173 and 60.174 as follows:

(1) Method 5 for the concentration of particulate matter and the associated moisture content.

(2) Sulfur dioxide concentrations shall be determined using the continuous monitoring system installed in accordance with § 60.175(a). One 2-hour average period shall constitute one run.

(b) For Method 5, Method 1 shall be used for selecting the sampling site and the number of traverse points, Method 2 for determining velocity and volumetric flow rate and Method 3 for determining the gas analysis. The sampling time for each run shall be at least 60 minutes and the minimum sampling volume shall be 0.85 dscm (30 dscf) except that smaller times or volumes, when necessitated by process variables or other factors, may be approved by the Administrator.

(Sec. 114, Clean Air Act as amended (42 U.S.C. 7414))

[41 FR 2340, Jan. 15, 1976, as amended at 43 FR 8800, Mar. 3, 1978]

## Subpart R—Standards of Performance for Primary Lead Smelters

SOURCE: 41 FR 2340, Jan 15, 1976, unless otherwise noted.

### § 60.180 Applicability and designation of affected facility.

(a) The provisions of this subpart are applicable to the following affected facilities in primary lead smelters: sintering machine, sintering machine discharge end, blast furnace, dross reverberatory furnace, electric smelting furnace, and converter.

(b) Any facility under paragraph (a) of this section that commences construction or modification after October 16, 1974, is subject to the requirements of this subpart.

(Secs. 111, 301(a), Clean Air Act; sec. 4(a) of Pub. L. 91-604, 84 Stat. 1683, sec. 2 of Pub. L 90-148, 81 Stat. 504 (42 U.S.C. 1857c-6, 1857g(a)))

[42 FR 37937, July 25, 1977]

### § 60.181 Definitions.

As used in this subpart, all terms not defined herein shall have the meaning given them in the Act and in Subpart A of this part.

(a) "Primary lead smelter" means any installation or any intermediate process engaged in the production of lead from lead sulfide ore concentrates through the use of pyrometallurgical techniques.

(b) "Sintering machine" means any furnace in which a lead sulfide ore concentrate charge is heated in the presence of air to eliminate sulfur contained in the charge and to agglomerate the charge into a hard porous mass called "sinter."

(c) "Sinter bed" means the lead sulfide ore concentrate charge within a sintering machine.

(d) "Sintering machine discharge end" means any apparatus which receives sinter as it is discharged from the conveying grate of a sintering machine.

(e) "Blast furnace" means any reduction furnace to which sinter is charged and which forms separate layers of molten slag and lead bullion.

(f) "Dross reverberatory furnace" means any furnace used for the removal or refining of impurities from lead bullion.

(g) "Electric smelting furnace" means any furnace in which the heat necessary for smelting of the lead sulfide ore concentrate charge is generated by passing an electric current through a portion of the molten mass in the furnace.

(h) "Converter" means any vessel to which lead concentrate or bullion is charged and refined.

(i) "Sulfuric acid plant" means any facility producing sulfuric acid by the contact process.

### § 60.182 Standard for particulate matter.

(a) On and after the date on which the performance test required to be conducted by § 60.8 is completed, no owner or operator subject to the provisions of this subpart shall cause to be discharged into the atmosphere from any blast furnace, dross reverberatory furnace, or sintering machine discharge end any gases which contain particulate matter in excess of 50 mg/dscm (0.022 gr/dscf).

### § 60.183 Standard for sulfur dioxide.

(a) On and after the date on which the performance test required to be conducted by § 60.8 is completed, no owner or operator subject to the provisions of this subpart shall cause to be discharged into the atmosphere from any sintering machine, electric smelting furnace, or converter gases which contain sulfur dioxide in excess of 0.065 percent by volume.

### § 60.184 Standard for visible emissions.

(a) On and after the date on which the performance test required to be conducted by § 60.8 is completed, no owner or operator subject to the provisions of this subpart shall cause to be discharged into the atmosphere from any blast furnace, dross reverberatory furnace, or sintering machine discharge end any visible emissions which exhibit greater than 20 percent opacity.

(b) On and after the date on which the performance test required to be conducted by § 60.8 is completed, no owner or operator subject to the provisions of this subpart shall cause to be discharged into the atmosphere from any affected facility that uses a sulfuric acid plant to comply with the standard set forth in § 60.183, any visible emissions which exhibit greater than 20 percent opacity.

### § 60.185 Monitoring of operations.

(a) The owner or operator of any primary lead smelter subject to the provisions of this subpart shall install and operate:

(1) A continuous monitoring system to monitor and record the opacity of gases discharged into the atmosphere from any blast furnace, dross reverberatory furnace, or sintering machine discharge end. The span of this system shall be set at 80 to 100 percent opacity.

(2) A continuous monitoring system to monitor and record sulfur dioxide emissions discharged into the atmosphere from any sintering machine, electric furnace or converter subject to § 60.183. The span of this system shall be set at a sulfur dioxide concentration of 0.20 percent by volume.

(i) The continuous monitoring system performance evaluation required under § 60.13(c) shall be completed prior to the initial performance test required under § 60.8. During the performance evaluation, the span of the continuous monitoring system may be set at a sulfur dioxide concentration of 0.15 percent by volume if necessary to maintain the system output between 20 percent and 90 percent of full scale. Upon completion of the continuous monitoring system performance evaluation, the span of the continuous monitoring system shall be set at a sulfur dioxide concentration of 0.20 percent by volume.

(ii) For the purpose of the continuous monitoring system performance evaluation required under § 60.13(c), the reference method referred to under the Field Test for Accuracy (Relative) in Performance Specification 2 of Appendix B to this part shall be Reference Method 6. For the performance evaluation, each concentration measurement shall be of one hour duration. The pollutant gases used to prepare the calibration gas mixtures required under paragraph 2.1, Performance Specification 2 of Appendix B, and for calibration checks under § 60.13(d), shall be sulfur dioxide.

(b) Two-hour average sulfur dioxide concentrations shall be calculated and recorded daily for the twelve consecutive two-hour periods of each operating day. Each two-hour average shall be determined as the arithmetic mean of the appropriate two contiguous one-hour average sulfur dioxide concentrations provided by the continuous monitoring system installed under paragraph (a) of this section.

(c) For the purpose of reports required under § 60.7(c), periods of excess emissions that shall be reported are defined as follows.

(1) Opacity. Any six-minute period during which the average opacity, as measured by the continuous monitoring system installed under paragraph (a) of this section, exceeds the standard under § 60.184(a).

(2) Sulfur dioxide. Any two-hour period, as described in paragraph (b) of this section, during which the average emissions of sulfur dioxide, as measured by the continuous monitoring system installed under paragraph (a) of this section, exceeds the standard under § 60.183.

(Sec. 114, Clean Air Act as amended (42 U.S.C 7414))

[41 FR 2340, Jan 15, 1976, as amended at 43 FR 8800, Mar. 3, 1978]

### § 60.186 Test methods and procedures.

(a) The reference methods in Appendix A to this part, except as provided for in § 60.8(b), shall be used to determine compliance with the standards prescribed in §§ 60.182, 60.183 and 60.184 as follows:

(1) Method 5 for the concentration of particulate matter and the associated moisture content.

(2) Sulfur dioxide concentrations shall be determined using the continuous monitoring system installed in accordance with § 60.185(a). One 2-hour average period shall constitute one run.

(b) For Method 5, Method 1 shall be used for selecting the sampling site and the number of traverse points, Method 2 for determining velocity and volumetric flow rate and Method 3 for determining the gas analysis. The sampling time for each run shall be at least 60 minutes and the minimum sampling volume shall be 0.85 dscm (30 dscf) except that smaller times or volumes, when necessitated by process variables or other factors, may be approved by the Administrator.

(Sec. 114, Clean Air Act as amended (42 U.S.C. 7414))

[41 FR 2340, Jan. 15, 1976, as amended at 43 FR 8800, Mar. 3, 1978]

## METHOD 20—DETERMINATION OF NITROGEN OXIDES, SULFUR DIOXIDE, AND OXYGEN EMISSIONS FROM STATIONARY GAS TURBINES

### *1. Applicability and Principle*

1.1 Applicability. This method is applicable for the determination of nitrogen oxides ($NO_x$), sulfur dioxide ($SO_2$), and oxygen ($O_2$) emissions from stationary gas turbines. For the $NO_x$ and $O_2$ determinations, this method includes: (1) measurement system design criteria, (2) analyzer performance specifications and performance test procedures; and (3) procedures for emission testing.

1.2 Principle. A gas sample is continuously extracted from the exhaust stream of a stationary gas turbine; a portion of the sample stream is conveyed to instrumental analyzers for determination of $NO_x$ and $O_2$ content. During each $NO_x$ and $OO_2$ determination, a separate measurement of $SO_2$ emissions is made, using Method 6, or it equivalent. The $O_2$ determination is used to adjust the $NO_x$ and $SO_2$ concentrations to a reference condition.

### *2. Definitions*

2.1 Measurement System. The total equipment required for the determination of a gas concentration or a gas emission rate. The system consists of the following major subsystems:

2.1.1 Sample Interface. That portion of a system that is used for one or more of the following: sample acquisition, sample transportation, sample conditioning, or protection of the analyzers from the effects of the stack effluent.

2.1.2 $NO_x$ Analyzer. That portion of the system that senses $NO_x$ and generates an output proportional to the gas concentration.

2.1.3 $O_2$ Analyzer. That portion of the system that senses $O_2$ and generates an output proportional to the gas concentration.

2.2 Span Value. The upper limit of a gas concentration measurement range that is specified for affected source categories in the applicable part of the regulations.

2.3 Calibration Gas. A known concentration of a gas in an appropriate diluent gas.

2.4 Calibration Error. The difference between the gas concentration indicated by the measurement system and the known concentration of the calibration gas.

2.5 Zero Drift. The difference in the measurement system output readings before and after a stated period of operation during which no unscheduled maintenance, repair, or adjustment took place and the input concentration at the time of the measurements was zero.

2.6 Calibration Drift. The difference in the measurement system output readings before and after a stated period of operation during which no unscheduled maintenance, repair, or adjustment took place and the input at the time of the measurements was a high-level value.

2.7 Residence Time. The elapsed time from the moment the gas sample enters the probe tip to the moment the same gas sample reaches the analyzer inlet.

2.8 Response Time. The amount of time required for the continuous monitoring system to display on the data output 95 percent of a step change in pollutant concentration.

2.9 Interference Response. The output response of the measurement system to a component in the sample gas, other than the gas component being measured.

### *3. Measurement System Performance Specifications*

3.1 $NO_2$ to NO Converter. Greater than 90 percent conversion efficiency of $NO_2$ to NO.

3.2 Interference Response. Less than ± 2 percent of the span value.

3.3 Residence Time. No greater than 30 seconds.

3.4 Response Time. No greater than 3 minutes.

3.5 Zero Drift. Less than ± 2 percent of the span value.

3.6 Calibration Drift. Less than ± 2 percent of the span value.

### *4. Apparatus and Reagents*

4.1 Measurement System. Use any measurement system for $NO_x$ and $O_2$ that is expected to meet the specifications in this method. A schematic of an acceptable measurement system is shown in Figure 20-1. The essential components of the measurement system are described below:

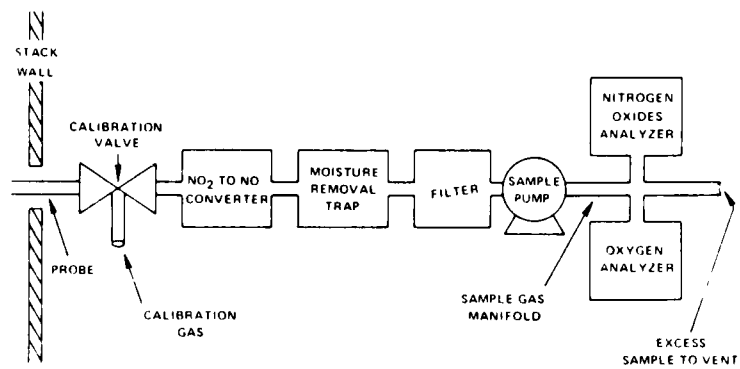


4.1.1 Sample Probe. Heated stainless steel, or equivalent, open-ended, straight tube of sufficient length to traverse the sample points.

4.1.2 Sample Line. Heated (>95°C) stainless steel or Teflon tubing to transport the sample gas to the sample conditioners and analyzers.

4.1.3 Calibration Valve Assembly. A three-way valve assembly to direct the zero and calibration gases to the sample conditioners and to the analyzers. The calibration valve assembly shall be capable of blocking the sample gas flow and of introducing calibration gases to the measurement system when in the calibration mode.

4.1.4 $NO_2$ to NO Converter. That portion of the system that converts the nitrogen dioxide ($NO_2$) in the sample gas to nitrogen oxide (NO). Some analyzers are designed to measure $NO_x$ as $NO_2$ on a wet basis and can be used without an $NO_2$ to NO converter or a moisture removal trap provided the sample line to the analyzer is heated (>95°C) to the inlet of the analyzer. In addition, an $NO_2$ to NO converter is not necessary if the $NO_2$ portion of the exhaust gas is less than 5 percent of the total $NO_x$ concentration. As a guideline, an $NO_2$ to NO converter is not necessary if the gas turbine is operated at 90 percent or more of peak load capacity. A converter is necessary under lower load conditions.

4.1.5 Moisture Removal Trap. A refrigerator-type condenser designed to continuously remove condensate from the sample gas. The moisture removal trap is not necessary for analyzers that can measure $NO_x$ concentrations on a wet basis, for these analyzers, (a) heat the sample line up to the inlet of the analyzers, (b) determine the moisture content using methods subject to the approval of the Administrator, and (c) correct the $NO_x$ and $O_2$ concentrations to a dry basis.

4.1.6 Particulate Filter. An in-stack or an out-of-stack glass fiber filter, of the type specified in EPA Reference Method 5, however, an out-of-stack filter is recommended when the stack gas temperature exceeds 250 to 300°C.

4.1.7 Sample Pump. A nonreactive leak-free sample pump to pull the sample gas through the system at a flow rate sufficient to minimize transport delay. The pump shall be made from stainless steel or coated with Teflon or equivalent.

4.1.8 Sample Gas Manifold. A sample gas manifold to divert portions of the sample gas stream to the analyzers. The manifold may be constructed of glass, Teflon, type 316 stainless steel, or equivalent.

4.1.9 Oxygen and Analyzer. An analyzer to determine the percent $O_2$ concentration of the sample gas stream.

4.1.10 Nitrogen Oxides Analyzer. An analyzer to determine the ppm $NO_x$ concentration in the sample gas stream.

4.1.11 Data Output. A strip-chart recorder, analog computer, or digital recorder for recording measurement data.

4.2 Sulfur Dioxide Analysis. EPA Reference Method 6 apparatus and reagents.

4.3 $NO_x$ Caliberation Gases. The calibration gases for the $NO_x$ analyzer may be NO in $N_2$, $NO_2$ in air or $N_2$, or NO and $NO_2$ in $N_2$. For $NO_x$ measurement analyzers that require oxidation of NO to $NO_2$, the calibra

tion gases must be in the form of NO in $N_2$. Use four calibration gas mixtures as specified below:

4.3.1 High-level Gas. A gas concentration that is equivalent to 80 to 90 percent of the span value.

4.3.2 Mid-level Gas. A gas concentration that is equivalent to 45 to 55 percent of the span value.

4.3.3 Low-level Gas. A gas concentration that is equivalent to 20 to 30 percent of the span value.

4.3.4 Zero Gas. A gas concentration of less than 0.25 percent of the span value. Ambient air may be used for the $NO_x$ zero gas.

4.4 $O_2$ Calibration Gases. Use ambient air at 20.9 percent as the high-level $O_2$ gas. Use a gas concentration that is equivalent to 11-14 percent $O_2$ for the mid-level gas. Use purified nitrogen for the zero gas.

4.5 $NO_2$/NO Gas Mixture. For determining the conversion efficiency of the $NO_2$ to NO converter, use a calibration gas mixture of $NO_2$ and NO in $N_2$. The mixture will be known concentrations of 40 to 60 ppm $NO_2$ and 90 to 110 ppm NO and certified by the gas manufacturer. This certification of gas concentration must include a brief description of the procedure followed in determining the concentrations.

### 5. *Measurement System Performance Test Procedures*

Perform the following procedures prior to measurement of emissions (Section 6) and only once for each test program, i.e., the series of all test runs for a given gas turbine engine.

5.1 Calibration Gas Checks. There are two alternatives for checking the concentrations of the calibration gases. (a) The first is to use calibration gases that are documented traceable to National Bureau of Standards Reference Materials. Use *Traceability Protocol for Establishing True Concentrations of Gases Used for Calibrations and Audits of Continuous Source Emission Monitors* (Protocol Number 1) that is available from the Environmental Monitoring and Support Laboratory, Quality Assurance Branch, Mail Drop 77, Environmental Protection Agency, Research Triangle Park, North Carolina 27711. Obtain a certification from the gas manufacturer that the protocol was followed. These calibration gases are not to be analyzed with the Reference Methods. (b) The second alternative is to use calibration gases not prepared according to the protocol. If this alternative is chosen, within 1 month prior to the emission test, analyze each of the calibration gas mixtures in triplicate using Reference Method 7 or the procedure outlined in Citation 8.1 for $NO_x$ and use Reference Method 3 for $O_2$. Record the results on a data sheet (example is shown in Figure 20-2). For the low-level, mid-level, or high-level gas mixtures, each of the individual $NO_x$ analytical results must be within 10 percent (or 10 ppm, whichever is greater) of the triplicate set average (or 0.5 percent $O_2$); otherwise, discard the entire set and repeat the triplicate analyses. If the average of the triplicate reference method test results is within 5 percent for $NO_x$ gas or 0.5 percent $O_2$ for the $O_2$ gas of the calibration gas manufacturer's tag value, use the tag value; otherwise, conduct at least three additional reference method test analyses until the results of six individual $NO_x$ runs (the three original plus three additional) agree within 10 percent (or 10 ppm, whichever is greater) of the average ($O_2$ test results must be within 0.5 percent $O_2$). Then use this average for the cylinder value.

5.2 Measurement System Preparation. Prior to the emission test, assemble the measurement system following the manufacturer's written instructions in preparing and operating the $NO_2$ to NO converter, the $NO_x$ analyzer, the $O_2$ analyzer, and other components.

Date _____ (Must be within 1 month prior to the test period)

Reference method used _____

| Sample run | Gas concentration, ppm | | |
|---|---|---|---|
| | Low level[a] | Mid level[b] | High level[c] |
| 1 | | | |
| 2 | | | |
| 3 | | | |
| Average | | | |
| Maximum % deviation[d] | | | |

[a] Average must be 20 to 30% of span value.

[b] Average must be 45 to 55% of span value.

[c] Average must be 80 to 90% of span value.

[d] Must be $\leq \pm$ 10% of applicable average or 10 ppm, whichever is greater.

Figure 20-2. Analysis of calibration gases.

5.3 Calibration Check. Conduct the calibration checks for both the $NO_x$ and the $O_2$ analyzers as follows:

5.3.1 After the measurement system has been prepared for use (Section 5.2), introduce zero gases and the mid-level calibration gases, set the analyzer output responses to the appropriate levels. Then introduce each of the remainder of the calibration gases described in Sections 4.3 or 4.4, one at a time, to the measurement system. Record the responses on a form similar to Figure 20-3.

5.3.2 If the linear curve determined from the zero and mid-level calibration gas responses does not predict the actual response of the low-level (not applicable for the $O_2$ analyzer) and high-level gases within $\pm 2$ percent of the span value, the calibration shall be considered invalid. Take corrective measures on the measurement system before proceeding with the test.

5.4 Interference Response. Introduce the gaseous components listed in Table 20-1 into the measurement system separately, or as gas mixtures. Determine the total interference output response of the system to these components in concentration units; record the values on a form similar to Figure 20-4. If the sum of the interference responses of the test gases for either the $NO_x$ or $O_2$ analyzers is greater than 2 percent of the applicable span value, take corrective measure on the measurement system.

Turbine type: _____ Identification number _____

Date: _____ Test number _____

Analyzer type: _____ Identification number _____

| | Cylinder value, ppm or % | Initial analyzer response, ppm or % | Final analyzer responses, ppm or % | Difference: initial-final, ppm or % |
|---|---|---|---|---|
| Zero gas | | | | |
| Low - level gas | | | | |
| Mid - level gas | | | | |
| High - level gas | | | | |

$$\text{Percent drift} = \frac{\text{Absolute difference}}{\text{Span value}} \times 100.$$

Figure 20-3. Zero and calibration data.

TABLE 20-1—INTERFERENCE TEST GAS CONCENTRATION

| | | | |
|---|---|---|---|
| CO | 500 ± 50 ppm | $CO_2$ | 10 ± 1 percent |
| $SO_2$ | 200 ± 20 ppm | $O_2$ | 20.9 ± 1 percent |

Date of test: _____

Analyzer type: _____ Serial No. _____

| Test gas type | Concentration, ppm | Analyzer output response | % of span |
|---|---|---|---|
| | | | |
| | | | |
| | | | |
| | | | |

$$\% \text{ of span} = \frac{\text{Analyzer output response}}{\text{Instrument span}} \times 100.$$

Figure 20-4. Interference response.

Conduct an interference response test of each analyzer prior to its initial use in the field Thereafter, recheck the measurement system if changes are made in the instrumentation that could alter the interference response, e.g., changes in the type of gas detector.

In lieu of conducting the interference response test, instrument vendor data, which demonstrate that for the test gases of Table 20-1 the interference performance specification is not exceeded, are acceptable.

5 5 Residence and Response Time

5 5.1 Calculate the residence time of the sample interface portion of the measurement system using volume and pump flow rate information Alternatively, if the response time determined as defined in Section 5.5.2 is less than 30 seconds, the calculations are not necessary

5.5.2 To determine response time, first introduce zero gas into the system at the calibration valve until all readings are stable, then, switch to monitor the stack effluent until a stable reading can be obtained. Record the upscale response time. Next, introduce high-level calibration gas into the system. Once the system has stabilized at the high-level concentration, switch to monitor the stack effluent and wait until a stable value is reached. Record the downscale response time. Repeat the procedure three times. A stable value is equivalent to a change of less than 1 percent of span value for 30 seconds or less than 5 percent of the measured average concentration for 2 minutes. Record the response time data on a form similar to Figure 20-5, the readings of the upscale or downscale reponse time, and report the greater time as the "response time" for the analyzer Conduct a response time test prior to the initial field use of the measurement system, and repeat if changes are made in the measurement system.

Date of test _____

Analyzer type _____ S/N _____

Span gas concentration _____ ppm

Analyzer span setting _____ ppm

Upscale
1 _____ seconds
2 _____ seconds
3 _____ seconds

Average upscale response _____ seconds

Downscale
1 _____ seconds
2 _____ seconds
3 _____ seconds

Average downscale response _____ seconds

System response time = slower average time = _____ seconds.

Figure 20-5. Response time

5.6 $NO_2$ NO Conversion Efficiency Introduce to the system, at the calibration valve assembly, the $NO_2$/NO gas mixture (Section 4.5). Record the response of the $NO_x$ analyzer. If the instrument response indicates less than 90 percent $NO_2$ to NO conversion, make corrections to the measurement system and repeat the check. Alternatively, the $NO_2$ to NO converter check described in Title 40 Part 86 *Certification and Test Procedures for Heavy-Duty Engines for 1979 and Later Model Years* may be used. Other alternate procedures may be used with approval of the Administrator.

6. *Emission Measurement Test Procedure*

6.1 Preliminaries.

6.1.1 Selection of a Sampling Site. Select a sampling site as close as practical to the exhaust of the turbine. Turbine geometry, stack configuration, internal baffling, and point of introduction of dilution air will vary for different turbine designs. Thus, each of these factors must be given special consideration in order to obtain a representative sample. Whenever possible, the sampling site shall be located upstream of the point of introduction of dilution air into the duct. Sample ports may be located before or after the upturn elbow, in order to accommodate the configuration of the turning vanes and baffles and to permit a complete, unobstructed traverse of the stack. The sample ports shall not be located within 5 feet or 2 diameters (whichever is less) of the gas discharge to atmosphere. For supplementary-fired, combined-cycle plants, the sampling site shall be located between the gas turbine and the boiler. The diameter of the sample ports shall be sufficient to allow entry of the sample probe.

6.1.2 A preliminary $O_2$ traverse is made for the purpose of selecting low $O_2$ values. Conduct this test at the turbine condition that is the lowest percentage of peak load operation included in the program. Follow the procedure below or alternative procedures subject to the approval of the Administrator may be used:

6.1.2.1 Minimum Number of Points. Select a minimum number of points as follows: (1) eight, for stacks having cross-sectional areas less than 1.5 $m^2$ (16.1 $ft^2$); (2) one sample point for each 0.2 $m^2$ (2.2 $ft^2$) of areas, for stacks of 1.5 $m^2$ to 10.0 $m^2$ (16.1-107.6 $ft^2$) in cross-sectional area, and (3) one sample point for each 0.4 $m^2$ (4.4 $ft^2$) of area, for stacks greater than 10.0 $m^2$ (107.6 $ft^2$) in cross-sectional area. Note that for circular ducts, the number of sample points must be a multiple of 4, and for rectangular ducts, the number of points must be one of those listed in Table 20-2; therefore, round off the number of points (upward), when appropriate.

6.1.2.2 Cross-sectional Layout and Location of Traverse Points. After the number of traverse points for the preliminary $O_2$ sampling has been determined, use Method 1 to located the traverse points.

6.1.2.3 Preliminary $O_2$ Measurement. While the gas turbine is operating at the lowest percent of peak load, conduct a preliminary $O_2$ measurement as follows. Position the probe at the first traverse point and begin sampling. The minimum sampling time at each point shall be 1 minute plus the average system response time. Determine the average steady-state concentration of $O_2$ at each point and record the data on Figure 20-6.

6.1.2.4 Selection of Emission Test Sampling Points. Select the eight sampling points at which the lowest $O_2$ concentration were obtained. Use these same points for all the test runs at the different turbine load conditions. More than eight points may be used, if desired.

TABLE 20-2 —CROSS-SECTIONAL LAYOUT FOR RECTANGULAR STACKS

| No. of traverse points | Matrix layout |
|---|---|
| 9 | 3 × 3 |
| 12 | 4 × 3 |
| 16 | 4 × 4 |
| 20 | 5 × 4 |
| 25 | 5 × 5 |
| 30 | 6 × 5 |
| 36 | 6 × 6 |
| 42 | 7 × 6 |
| 49 | 7 × 7 |

Location: Date _____

Plant _____

City, State _____

Turbine identification:

Manufacturer _____

Model, serial number _____

| Sample point | Oxygen concentration, ppm |
|---|---|
| | |

Figure 20-6. Preliminary oxygen traverse.

6.2 $NO_x$ and $O_2$ Measurement. This test is to be conducted at each of the specified load conditions. Three test runs at each load condition constitute a complete test.

6.2.1 At the beginning of each $NO_x$ test run and, as applicable, during the run, record turbine data as indicated in Figure 20-7. Also, record the location and number of the traverse points on a diagram.

6.2.2 Position the probe at the first point determined in the preceding section and begin sampling. The minimum sampling time at each point shall be at least 1 minute plus the average system response time. Determine the average steady-state concentration of $O_2$ and $NO_x$ at each point and record the data on Figure 20-8.

TURBINE OPERATION RECORD

Test operator _____ Date _____

Turbine identification.

Type _____

Serial No. _____

Location

Plant _____

City _____

Ambient temperature _____

Ambient humidity _____

Test time start _____

Test time finish _____

Fuel flow rate[a] _____

Water or steam _____
Flow rate[a]

Ambient Pressure _____

Ultimate fuel Analysis

C _____
H _____
O _____
N _____
S _____
Ash _____
$H_2O$ _____

Trace Metals

Na _____
Va _____
K _____
etc[b] _____

Operating load _____

[a]Describe measurement method, i.e., continuous flow meter, start finish volumes, etc.

[b]i.e., additional elements added for smoke suppression.

Figure 20-7 Stationary gas turbine data.

Turbine identification

Manufacturer _____

Model, serial No. _____

Location

Plant _____

City, State _____

Ambient temperature _____

Ambient pressure _____

Date _____

Test time start _____

Test time finish _____

Test operator name _____

$O_2$ instrument type _____
Serial No _____

$NO_x$ instrument type _____
Serial No. _____

| Sample point | Time, min. | $O_2^a$, % | $NO_x^a$, ppm |
|---|---|---|---|
| | | | |
| | | | |
| | | | |
| | | | |
| | | | |
| | | | |

[a]Average steady state value from recorder or instrument readout

Figure 20-8. Stationary gas turbine sample point record

6.2.3 After sampling the last point, conclude the test run by recording the final turbine operating parameters and by determining the zero and calibration drift, as follows

Immediately following the test run at each load condition, or if adjustments are necessary for the measurement system during the tests, reintroduce the zero and mid-level calibration gases as described in Sections 4.3, and 4.4, one at a time, to the measurement system at the calibration valve assembly. (Make no adjustments to the measurement system until after the drift checks are made) Record the analyzers' responses on a form similar to Figure 20-3 If the drift values exceed the specified limits, the test run preceding the check is considered invalid and will be repeated following corrections to the measurement system Alternatively, the test results may be accepted provided the measurement system is recalibrated and the calibration data that result in the highest corrected emission rate are used

6.3 $SO_2$ Measurement. This test is conducted only at the 100 percent peak load condition Determine $SO_2$ using Method 6 or equivalent, during the test. Select a minimum of six total points from those required for the $NO_x$ measurements; use two points for each sample run. The sample time at each point shall be at least 10 minutes. Average the $O_2$ readings taken during the $NO_x$ test runs at sample points corresponding to the $SO_2$ traverse points (see Section 6.2.2) and use this average $O_2$ concentration to correct the integrated $SO_2$ concentration obtained by Method 6 to 15 percent $O_2$ (see Equation 20-1).

If the applicable regulation allows fuel sampling and analysis for fuel sulfur content to demonstrate compliance with sulfur emission unit, emission sampling with Reference Method 6 is not required, provided the fuel sulfur content meets the limits of the regulation.

### 7. *Emission Calculations*

7.1 Correction to 15 Percent Oxygen. Using Equation 20-1, calculate the $NO_x$ and $SO_2$ concentrations (adjusted to 15 percent $O_2$) The correction to 15 percent $O_2$ is sensitive to the accuracy of the $O_2$ measurement. At the level of analyzer drift specified in the method (±2 percent of full scale), the change in the $O_2$ concentration correction can exceed 10 percent when the $O_2$ content of the exhaust is above 16 percent $O_2$. Therefore $O_2$ analyzer stability and careful calibration are necessary.

$$C_{adj} = C_{meas} \times \frac{5.9}{20.9 - \%O_2} \qquad \text{(Equation 20-1)}$$

Where:

$C_{adj}$ = Pollutant concentration adjusted to 15 percent $O_2$ (ppm)

$C_{meas}$ = Pollutant concentration measured, dry basis (ppm)

5.9 = 20.9 percent $O_2$ − 15 percent $O_2$, the defined $O_2$ correction basis

Percent $O_2$ = Percent $O_2$ measured, dry basis (%)

7.2 Calculate the average adjusted $NO_x$ concentration by summing the point values and dividing by the number of sample points.

### 8. *Citations*

8.1 Curtis, F. A Method for Analyzing $NO_x$ Cylinder Gases-Specific Ion Electrode Procedure, Monograph available from Emission Measurement Laboratory, ESED, Research Triangle Park, N.C. 27711, October 1978.

# Section II

## Selected Excerpts from the *Federal Register*

*Federal Register* publications dealing with continuous source emission monitoring: Promulgated Rules, Proposed Rules, and Announcements.

federal register

MONDAY, OCTOBER 6, 1975

PART V:

# ENVIRONMENTAL PROTECTION AGENCY

■

## REQUIREMENTS FOR SUBMITTAL OF IMPLEMENTATION PLANS

## STANDARDS FOR NEW STATIONARY SOURCES

Emission Monitoring

Title 40—Protection of Environment

CHAPTER I—ENVIRONMENTAL PROTECTION AGENCY

SUBCHAPTER C—AIR PROGRAMS

[FRL 423-6]

## PART 51—REQUIREMENTS FOR THE PREPARATION, ADOPTION AND SUBMITTAL OF IMPLEMENTATION PLANS

### Emission Monitoring of Stationary Sources

On September 11, 1974, the Environmental Protection Agency (EPA) proposed revisions to 40 CFR Part 51, Requirements for the Preparation, Adoption, and Submittal of Implementation Plans. EPA proposed to expand § 51.19 to require States to revise their State Implementation Plans (SIP's) to include legally enforceable procedures requiring certain specified categories of existing stationary sources to monitor emissions on a continuous basis. Revised SIP's submitted by States in response to the proposed revisions to 40 CFR 51.19 would have (1) required owners or operators of specified categories of stationary sources to install emission monitoring equipment within one year of plan approval, (2) specified the categories of sources subject to the requirements, (3) identified for each category of sources the pollutant(s) which must be monitored, (4) set forth performance specifications for continuous emission monitoring instruments, (5) required that such instruments meet performance specifications through on-site testing by the owner or operator, and (6) required that data derived from such monitoring be summarized and made available to the State on a quarterly basis.

As a minimum, EPA proposed that States must adopt and implement legally enforceable procedures to require monitoring of emissions for existing sources in the following source categories (but only for sources required to limit emissions to comply with an adopted regulation of the State Implementation Plan):

(a) Coal-fired steam generators of more than 250 million BTU per hour heat input (opacity, sulfur dioxide, oxides of nitrogen and oxygen);

(b) Oil-fired steam generators of more than 250 million BTU per hour heat input (sulfur dioxide, oxides of nitrogen and oxygen). An opacity monitor was required only if an emission control device is needed to meet particulate emission regulations, or if violations of visible emission regulations are noted;

(c) Nitric acid plants (oxides of nitrogen);

(d) Sulfuric acid plants (sulfur dioxide and

(e) Petroleum refineries' fluid catalytic cracking unit catalyst regenerators (opacity).

Simultaneously, the Agency proposed similar continuous emission monitoring requirements for new sources for each of the previously identified source categories, subject to the provisions of federal New Source Performance Standards set forth in 40 CFR Part 60. Since many of the technical aspects of the two proposals were similar, if not the same, the proposed regulations for Part 51 (i.e., those relating to SIP's and existing sources) included by reference many specific technical details set forth in 40 CFR Part 60, (39 FR 32852).

At the time of the proposal of the continuous emission monitoring regulations in the FEDERAL REGISTER, the Agency invited comments on the proposed rulemaking action. Many interested parties submitted comments. Of the 76 comments received, 35 were from electric utility companies, 26 were from oil refineries or other industrial companies, 12 were from governmental agencies, and 3 were from manufacturers and/or suppliers of emission monitors. No comments were received from environmental groups. Further, prior to the proposal of the regulations in the FEDERAL REGISTER, the Agency sought comments from various State and local air pollution control agencies and instrument manufacturers. Copies of each of these comments are available for public inspection at the EPA Freedom of Information Center, 401 M Street, S.W., Washington, D.C. 20460. These comments have been considered, additional information collected and assessed, and where determined by the Administrator to be appropriate, revisions and amendments have been made in formulating these regulations promulgated herein.

*General Discussion of Comments.* In general, the comments received by the Agency tended to raise various objections with specific portions of the regulations. Some misinterpreted the proposed regulations, not realizing that emission monitoring under the proposal was not required unless a source was required to comply with an adopted emission limitation or sulfur in fuel limitation that was part of an approved or promulgated State Implementation Plan. Many questioned the Agency's authority and the need to require sources to use *continuous* emission monitors. Others stated that the proposed regulations were inflationary, and by themselves could not reduce emissions to the atmosphere nor could they improve air quality. A relatively common comment was that the benefits to be derived from the proposed emission monitoring program were not commensurate with the costs associated with the purchase, installation, and operation of such monitors. Many stated that the proposed regulations were not cost-effectively applied and they objected to *all* sources within an identified source category being required to monitor emissions, without regard for other considerations. For instance, some suggested that it was unnecessary to monitor emissions from steam generating plants that may soon be retired from operation, or steam generating boilers that are infrequently used (such as for peaking and cycling operations) or for those sources located in areas of the nation which presently have ambient concentrations better than national ambient air quality standards. This latter comment was especially prevalent in relation to the need for continuous emission monitors designed to measure emissions of oxides of nitrogen. Further, commentors generally suggested that state and local control agencies, rather than EPA should be responsible for determining which sources should monitor emissions. In this regard, the commentors suggested that a determination of the sources which should install continuous monitors should be made on a case-by-case basis. Almost all objected to the data reporting requirements stating that the proposed requirement of submission of all collected data was excessive and burdensome. Comments from state and local air pollution control agencies in general were similar to those from the utility and industrial groups, but in addition, some indicated that the manpower needed to implement the programs required by the proposed regulations was not available.

*Rationale for Emission Monitoring Regulation.* Presently, the Agency's regulations setting forth the requirements for approvable SIP's require States to have legal authority to require owners or operators of stationary sources to install, maintain, and use emission monitoring devices and to make periodic reports of emission data to the State (40 CFR 51.11(a)(6)). This requirement was designed to partially implement the requirements of Sections 110(a)(2)(F)(ii) and (iii) of the Clean Air Act, which state that implementation plans must provide "requirements for installation of equipment by owners or operators of stationary sources to monitor emissions from such sources", and "for periodic reports on the nature and amounts of such emissions". However, the original implementation plan requirements did not require SIP's to contain legally enforceable procedures mandating continuous emission monitoring and recording. At the time the original requirements were published, the Agency had accumulated little data on the availability and reliability of continuous monitoring devices. The Agency believed that the state-of-the-art was such that it was not prudent to require existing sources to install such devices.

Since that time, much work has been done by the Agency and others to field test and compare various continuous emission monitors. As a result of this work, the Agency now believes that for certain sources, performance specifications for accuracy, reliability and durability can be established for continuous emission monitors of oxygen, carbon dioxide, sulfur dioxide, and oxides of nitrogen and for the continuous measurement of opacity. Accordingly, it is the Administrator's judgment that Sections 110(a)(2)(F)(ii) and (iii) should now be more fully implemented.

The Administrator believes that a sound program of continuous emission monitoring and reporting will play an important role in the effort to attain and maintain national standards. At the present time, control agencies rely upon infrequent manual source tests and periodic field inspections to provide much of the enforcement information necessary to ascertain compliance of sources with adopted regulations. Manual source tests are generally performed on a relatively infrequent basis, such as

once per year, and in some cases, affected sources probably have never been tested. Manual stack tests are generally performed under optimum operating conditions, and as such, do not reflect the full-time emission conditions from a source. Emissions continually vary with fuel firing rates, process material feed rates and various other operating conditions. Since manual stack tests are only conducted for a relatively short period of time (e.g., one to three hours), they cannot be representative of all operating conditions. Further, frequent manual stack tests (such as conducted on a quarterly or more frequent basis) are costly and may be more expensive than continuous monitors that provide much more information. State Agency enforcement by field inspection is also sporadic, with only occasional inspection of certain sources, mainly for visible emission enforcement.

Continuous emission monitoring and recording systems, on the other hand, can provide a continuous record of emissions under all operating conditions. The continuous emission monitor is a good indicator of whether a source is using good operating and maintenance practices to minimize emissions to the atmosphere and can also provide a valuable record to indicate the performance of a source in complying with applicable emission control regulations. Additionally, under certain instances, the data from continuous monitors may be sufficient evidence to issue a notice of violation. The continuous emission record can also be utilized to signal a plant upset or equipment malfunction so that the plant operator can take corrective action to reduce emissions. Use of emission monitors can therefore provide valuable information to minimize emissions to the atmosphere and to assure that full-time control efforts, such as good maintenance and operating conditions, are being utilized by source operators.

The Agency believes that it is necessary to establish national minimum requirements for emission monitors for specified sources rather than allow States to determine on a case-by-case basis the specific sources which need to continuously monitor emissions. The categories specified in the regulations represent very significant sources of emissions to the atmosphere. States in developing SIP's have generally adopted control regulations to minimize emissions from these sources. Where such regulations exist, the Agency believes that continuous emission monitors are necessary to provide information that may be used to provide an indication of source compliance. Further, it is believed that if the selection of sources on a case-by-case basis were left to the States, that some States would probably not undertake an adequate emission monitoring program. Some State Agencies who commented on the proposed regulations questioned the state-of-the-art of emission monitoring and stated their opinion that the proposed requirements were premature. Therefore, it is the Administrator's judgment that, in order to assure an adequate nationwide emission monitoring program, minimum emission monitoring requirements must be established.

The source categories affected by the regulations were selected because they are significant sources of emissions and because the Agency's work at the time of the proposal of these regulations in the field of continuous emission monitoring evaluation focused almost exclusively on these source categories. The Agency is continuing to develop data on monitoring devices for additional source categories. It is EPA's intent to expand the minimum continuous emission monitoring requirements from time to time when the economic and technological feasibility of continuous monitoring equipment is demonstrated and where such monitoring is deemed appropriate for other significant source categories.

*Discussion of Major Comments.* Many commentors discussed the various cost aspects of the proposed regulations, specifically stating that the costs of continuous monitors were excessive and inflationary. A total of 47 commentors expressed concern for the cost and/or cost effectiveness of continuous monitors. Further, the Agency's cost estimates for purchasing and installing monitoring systems and the costs for data reduction and reporting were questioned. In many cases, sources provided cost estimates for installation and operation of continuous monitors considerably in excess of the cost estimates provided by the Agency.

In response to these comments, a further review was undertaken by the Agency to assess the cost impact of the regulations. Three conclusions resulted from this review. First, it was determined that the cost ranges of the various emission monitoring systems provided by the Agency are generally accurate for new sources. Discussions with equipment manufacturers and suppliers confirmed this cost information. Approximate investment costs, which include the cost of the emission monitor, installation cost at a *new* facility, recorder, performance testing, data reporting systems and associated engineering costs are as follows: for opacity, $20,000; for sulfur dioxide and oxygen or oxides of nitrogen and oxygen, $30,000; and for a source that monitors opacity, oxides of nitrogen, sulfur dioxide and oxygen, $55,000. Annual operating costs, which include data reduction and report preparation, system operation, maintenance, utilities, taxes, insurance and annualized capital costs at 10% for 8 years are: $8,500; $16,000; and $30,000 respectively for the cases described above.(1)

Secondly, the cost review indicated that the cost of installation of emission monitors for existing sources could be considerably higher than for new sources because of the difficulties in providing access to a sampling location that can provide a representative sample of emissions. The cost estimates provided by the Agency in the proposal were specifically developed for *new* sources whose installation costs are relatively stable since provisions for monitoring equipment can be incorporated at the time of plant design. This feature is not available for existing sources, hence higher costs generally result. Actual costs of installation at existing sources may vary from one to five times the cost of normal installation at new sources, and in some cases even higher costs can result. For example, discussions with instrument suppliers indicate that a typical cost of installation of an opacity monitor on an existing source may be two to three times the purchase price of the monitor. Difficulties also exist for installation of gaseous monitors at existing sources.

It should be noted that these installation costs include material costs for scaffolding, ladders, sampling ports and other items necessary to provide access to a location where source emissions can be measured. It is the Agency's opinion that such costs cannot be solely attributed to these continuous emission monitoring regulations. Access to sampling locations is generally necessary to determine compliance with applicable state or local emission limitations by routine manual stack testing methods. Therefore, costs of providing access to a representative sampling location are more directly attributed to the cost of compliance with adopted emission limitations, than with these continuous emission monitoring regulations.

Lastly, the review of cost information indicated that a number of commentors misinterpreted the extent of the proposed regulations, thereby providing cost estimates for continuous monitors which were not required. Specifically, all commentors did not recognize that the proposed regulations required emission monitoring for a source only if an applicable State or local emission limitation of an approved SIP affected such a source. For example, if the approved SIP did not contain an adopted control regulation to limit oxides of nitrogen from steam-generating, fossil fuel-fired boilers of a capacity in excess of 250 million BTU per hour heat input, then such source need not monitor oxides of nitrogen emissions. Further, some utility industry commentors included the costs of continuous emission monitors for sulfur dioxide. The proposed regulations, however, generally allowed the use of fuel analysis by specified ASTM procedures as an alternative which, in most cases, is less expensive than continuous monitoring. Finally, the proposed regulations required the continuous monitoring of oxygen in the exhaust gas only if the source must otherwise continuously monitor oxides of nitrogen or sulfur dioxide. Oxygen information is used solely to provide a correction for excess air when converting the measurements of gaseous pollutants concentrations in the exhaust gas stream to units of an applicable emission limitation. Some commentors did not recognize this point (which was not specifically stated in the proposed regulations) and provided cost estimates for oxygen monitors when they were not required by the proposed regulations.

While not all commentors' cost estimates were correct, for various reasons noted above, it is clear that the costs associated with implementing these emission monitoring regulations are sig-

nificant. The Administrator, however, believes that the benefits to be derived from emission monitoring are such that the costs are not unreasonable. The Administrator does, however, agree with many commentors that the proposed regulations, in some cases, were not applied cost-effectively and, as such, the regulations promulgated herein have been modified to provide exemptions to certain sources from these minimum requirements.

One comment from another Federal Agency concerned the time period that emissions are to be averaged when reporting excess emissions. Specifically, the commentor assumed that the emission control regulations that have been adopted by State and local agencies were generally designed to attain *annual* ambient air quality standards. As such, the commentor pointed out that short-term emission levels in excess of the adopted emission standard should be acceptable for reasonable periods of time.

The Administrator does not agree with this rationale for the following reasons. First, it is not universally true that annual ambient standards were the design basis of emission control regulations. In many cases, reductions to attain short-term standards require more control than do annual standards. Even if the regulations were based upon annual standards, allowing excess emissions of the adopted emission control regulation on a short-term basis could cause noncompliance with annual standards. More importantly, however, a policy of legally allowing excesses of adopted control regulations would in effect make the current emission limitation unenforceable. If the suggestion were implemented, a question would arise as to what is the maximum emission level that would not be considered an excess to the adopted regulation. The purpose of the adopted emission limitation was to establish the acceptable emission level. Allowing emissions in excess of that adopted level would cause confusion, ambiguity, and in many cases could result in an unenforceable situation Hence the Administrator does not concur with the commentor's suggestion.

*Modifications to the Proposed Regulations* The modification to the regulations which has the most significant impact involves the monitoring requirements for oxides of nitrogen at fossil fuel-fired steam generating boilers and at nitric acid plants. Many commentors correctly noted that the Agency in the past (June 8, 1973, 38 FR 15174) had indicated that the need for many emission control regulations for oxides of nitrogen were based upon erroneous data Such a statement was made after a detailed laboratory analysis of the reference ambient measurement method for nitrogen dioxide revealed the method to give false measurements. The sampling technique generally indicated concentrations of nitrogen dioxide higher than actually existed in the atmosphere. Since many control agencies prior to that announcement had adopted emission regulations that were determined to be needed based upon these erroneous data, and since new data, collected by other measurement techniques, indicated that in most areas of the nation such control regulations were not necessary to satisfy the requirements of the SIP, the Agency suggested that States consider the withdrawal of adopted control regulations for the control of oxides of nitrogen from their SIP's (May 8, 1974, 39 FR 16344). In many States, control agencies have not taken action to remove these regulations from the SIP. Hence, the commentors pointed out that the proposed regulations to require continuous emission monitors on sources affected by such regulations is generally unnecessary.

Because of the unique situation involving oxides of nitrogen control regulations, the Administrator has determined that the proposed regulations to continuously monitor oxides of nitrogen emissions may place an undue burden on source operators, at least from a standpoint of EPA specifying minimum monitoring requirements. The continuous emission monitoring requirements for such sources therefore have been modified. The final regulations require the continuous emission monitoring of oxides of nitrogen only for those sources in Air Quality Control Regions (AQCR's) where the Administrator has specifically determined that a control strategy for nitrogen dioxide is necessary. At the present time such control strategies are required only for the Metropolitan Los Angeles Intrastate and the Metropolitan Chicago Interstate AQCR's.

It should be noted that a reeent compilation of valid nitrogen dioxide air quality data suggests that approximately 14 of the other 245 AQCR's in the nation may need to develop a control strategy for nitrogen dioxide. These AQCR's are presently being evaluated by the Agency. If any additional AQCR's are identified as needing a control strategy for nitrogen dioxide at that time, or any time subsequent to this promulgation, then States in which those AQCR's are located must also revise their SIP's to require continuous emission monitoring for oxides of nitrogen for specified sources. Further, it should be noted that the regulations promulgated today are minimum requirements, so that States, if they believe the control of oxides of nitrogen from sources is necessary may, as they deem appropriate, expand the continuous emission monitoring requirements to apply to additional sources not affected by these minimum requirements.

Other modifications to the proposed regulation resulted from various comments. A number of commentors noted that the proposed regulations included some sources whose emission impact on air quality was relatively minor. Specifically, they noted that fossil fuel-fired steam generating units that were used solely for peaking and cycling purposes should be exempt from the proposed regulations. Similarly, some suggested that smaller sized units, particularly steam-generating units less than 2,500 million BTU per hour heat input, should also be exempted. Others pointed out that units soon to be retired from operation should not be required to install continuous monitoring devices and that sources located in areas of the nation that already have air quality better than the national standards should be relieved of the required monitoring and reporting requirements. The Agency has considered these comments and has made the following judgments.

In relation to fossil fuel-fired steam generating units, the Agency has determined that such units that have an annual boiler capacity factor of 30% or less as currently defined by the Federal Power Commission shall be exempt from the minimum requirements for monitoring and reporting. Industrial boilers used at less than 30% of their annual capacity, upon demonstration to the State, may also be granted an exemption from these monitoring requirements. The rationale for this exemption is based upon the fact that all generating units do not produce power at their full capacity at all times. There are three major classifications of power plants based on the degree to which their rated capacity is utilized on an annual basis. Baseload units are designed to run at near full capacity almost continuously. Peaking units are operated to supply electricity during periods of maximum system demand. Units which are operated for intermediate service between the extremes of baseload and peaking are termed cycling units.

Generally accepted definitions term units generating 60 percent or more of their annual capacity as baseload, those generating less than 20 percent as peaking and those between 20 and 60 percent as cycling. In general, peaking units are older, smaller, of lower efficiency, and more costly to operate than base load or cycling units. Cycling units are also generally older, smaller and less efficient than base load units. Since the expected life of peaking units is relatively short and total emissions from such units are small, the benefits gained by installing monitoring instruments are small in comparison to the cost of such equipment. For cycling units, the question of cost-effectiveness is more difficult to ascertain. The units at the upper end of the capacity factor range (i.e., near 60% boiler capacity factor) are candidates for continuous emission monitoring while units at the lower end of the range (i.e., near 20% boiler capacity factor) do not represent good choices for continuous monitors. Based upon available emission information, it has been calculated that fossil fuel-fired steam generating plants with a 30% or less annual boiler capacity factor contribute approximately less than 5% of the total sulfur dioxide from all such power plants. (2) Hence, the final regulations do not affect any boiler that has an annual boiler capacity factor of less than 30%. Monitoring requirements will thus be more cost effectively applied to the newer, larger, and more efficient units that burn a relatively larger portion of the total fuel supply.

Some commentors noted that the age of the facility should be considered in relation to whether a source need com-

ply with the proposed regulations. For fossil fuel-fired steam generating units, the exemption relating to the annual boiler capacity factor previously discussed should generally provide relief for older units. It is appropriate, however, that the age of the facility be considered for other categories of sources affected by the proposed regulations. As such, the final regulations allow that any source that is scheduled to be retired within five years of the inclusion of monitoring requirements for the source in Appendix P need not comply with the minimum emission monitoring requirements promulgated herein. In the Administrator's judgment, the selection of five years as the allowable period for this exemption provides reasonable relief for those units that will shortly be retired. However, it maintains full requirements on many older units with a number of years of service remaining. In general, older units operate less efficiently and are less well controlled than newer units so that emission monitoring is generally useful. The exemption provided in the final regulations effectively allows such retirees slightly more than a two-year period of relief, since the schedule of implementation of the regulations would generally require the installation of emission monitors by early 1978. States must submit, for EPA approval, the procedures they will implement to use this provision. States are advised that such exemptions should only be provided where a bona fide intent to cease operations has been clearly established. In cases where such sources postpone retirement, States shall have established procedures to require such sources to monitor and report emissions. In this regard, it should be noted that Section 113(c)(2) of the Act provides that any person who falsifies or misrepresents a record, report or other document filed or required under the Act shall, upon conviction, be subject to fine or imprisonment, or both.

A further modification to the proposed regulations affects the minimum size of the units within each of the source categories to which emission monitoring and reporting shall be required. As suggested by many commentors, the Agency has investigated the cost effectiveness of requiring all units within the identified source categories to install emission monitors. Each pollutant for each source category identified in the proposed regulations was evaluated. For fossil fuel-fired steam generating units, the proposal required compliance for all boilers with 250 million BTU per hour heat input, or greater. For opacity, the proposed regulations required emission monitoring for all coal-fired units, while only those oil-fired units that had been observed as violators of visible emission regulations or must use an emission control device to meet particulate matter regulations were required to install such devices. Gas-fired units were exempted by the proposed regulations.

After investigating the particulate emission potential of these sources, it has been determined that no modification in the size limitation for boilers in relation to opacity is warranted. The rationale for this judgment is that the smaller-sized units affected by the proposed regulation tend to be less efficiently operated or controlled for particulate matter than are the larger-sized units. In fact, smaller units generally tend to emit more particulate emissions on an equivalent fuel basis than larger-sized units. (2) Because of the potential of opacity regulation violations, no modifications have been made to the regulations as to the size of steam generating boilers that must measure opacity.

Emissions of oxides of nitrogen from boilers are a function of the temperature in the combustion chamber and the cooling of the combustion products. Emissions vary considerably with the size and the type of unit. In general, the larger units produce more oxides of nitrogen emissions. The Agency therefore finds that the minimum size of a unit affected by the final regulations can be increased from 250 to 1,000 million BTU per hour heat input, without significantly reducing the total emissions of oxides of nitrogen that would be affected by monitoring and reporting requirements. Such a modification would have the effect of exempting approximately 56% of the boilers over 250 million BTU per hour heat input capacity, on a national basis, while maintaining emission monitoring and reporting requirements for approximately 78% of the potential oxides of nitrogen emissions from such sources.(2) Further, in the 2 AQCR's where the Administrator has specifically called for a control strategy for nitrogen dioxide, the boilers affected by the regulation constitute 50% of the steam generators greater than 250 million BTU per hour heat input, yet they emit 80% of the nitrogen oxides from such steam generators in these 2 AQCR's.(2)

Also, certain types of boilers or burners, due to their design characteristics, may on a regular basis attain emission levels of oxides of nitrogen well below the emission limitations of the applicable plan. The regulations have been revised to allow exemption from the requirements for installing emission monitoring and recording equipment for oxides of nitrogen when a facility is shown during performance tests to operate with oxides of nitrogen emission levels 30% or more below the emission limitation of the applicable plan. It should be noted that this provision applies solely to oxides of nitrogen emissions rather than other pollutant emissions, since oxides of nitrogen emissions are more directly related to boiler design characteristics than are other pollutants.

Similar evaluations were made for nitric acid plants, sulfuric acid plants and catalytic cracking unit catalyst regenerators at petroleum refineries. For each of these industries it was found that modifications to the proposed regulations could be made to increase the minimum size of the units affected by the proposed regulations without significantly decreasing the total emissions of various pollutants that would be affected by these monitoring and reporting requirements. Specifically, for nitric acid plants it was found that by modifying the proposed regulations to affect only those plants that have a total daily production capacity of 300 tons or more of nitric acid (rather than affecting all facilities as proposed) that approximately 79% of the nitric acid production on a national basis would be affected by the provisions of these monitoring and reporting requirements. On the other hand, such a modification reduces the number of monitors required for compliance with these regulations by approximately 46%. (2) At the present time, only nitric acid plants in AQCR's where the Administrator has specifically called for a control strategy for nitrogen dioxide will be candidates for continuous emission monitoring requirements for the reasons mentioned previously. In the 2 AQCR's where such a control strategy has been called for, there is only one known nitric acid plant and that is reported to be less than 300 tons per day production capacity—hence no nitric acid plants at the present time will be affected by these monitoring requirements.

Similarly, evaluations of sulfuric acid plants and catalytic cracking catalyst regenerators at petroleum refineries resulted in the conclusion that minimum size limitations of 300 tons per day production rate at sulfuric acid plants, and 20,000 barrels per day of fresh feed to any catalytic cracking unit at petroleum refineries could be reasonably established. Such modifications exempt approximately 37% and 39% respectively of such plants on a national basis from these emission monitoring and reporting requirements, while allowing about 9% of the sulfur dioxide emissions from sulfuric acid plants and 12% of the particulate matter emissions from catalytic cracking units to be emitted to the atmosphere without being measured and reported. (2) The Agency believe that such modifications provide a reasonable balance between the costs associated with emission monitoring and reporting, and the need to obtain such information.

A number of commentors suggested that sources be exempt from the proposed emission monitoring regulations if such sources are located within areas of the nation that are already attaining national standards. The Administrator does not believe that such an approach would be consistent with Section 110 of the Clean Air Act, which requires continued maintenance of ambient standards after attainment. In many areas, the standards are being attained only through effective implementation of emission limitations. Under the Clean Air Act, continued compliance with emission limitations in these areas is just as important as compliance in areas which have not attained the standards.

Another major comment concerned the proposed data reporting requirements. Thirty-four (34) commentors expressed concern at the amount of data which the proposed regulations required to be recorded, summarized, and submit-

ted to the State. It was generally indicated by the commentors that the data reporting requirements were excessive. Commentors questioned the purpose of reporting all measured data while some State agencies indicated they have limited resources to handle such information. EPA believes that, in some cases, the commentors misconstrued the data reporting requirements for existing sources. In light of each of these comments, the final regulations, with respect to the data reporting requirements for gaseous pollutants and opacity, have been modified.

For gaseous emissions, the proposed regulations required the reporting of all one-hour averages obtained by the emission monitor. Because of the comments on this provision, the Agency has reexamined the proposed data reporting requirements. As a result, the Agency has determined that only information concerning emissions in excess of emission limitations of the applicable plan is necessary to satisfy the intent of these regulations. Therefore, the data reporting requirements for gaseous pollutants have been modified. The final regulations require that States adopt procedures that would require sources to report to the State on emission levels in excess of the applicable emission limitations (i.e., excess emissions) for the time period specified in the regulation with which compliance is determined. In other words, if an applicable emission limitation required no more than 1.0 pounds per hour SO to be emitted for any two-hour averaging period, the data to be reported by the source should identify the emission level (i.e., emissions stated in pounds per hour) averaged over a two-hour time period, for periods only when this emission level was in excess of the 1.0 pounds per hour emission limitation. Further, sources shall be required to maintain a record of all continuous monitoring observations for gaseous pollutants (and opacity measurements) for a period of two years and to make such data available to the State upon request. The final regulations have also been amended to add a provision to require sources to report to the State on the apparent reason for all noted violations of applicable regulations.

The proposed data reporting requirements for opacity have also been modified Upon reconsideration of the extent of the data needed to satisfy the intent of these regulations, it is the Administrator's judgment that for opacity States must obtain excess emission measurements during each hour of operation. However, before determining excess emissions, the number of minutes generally exempted by State opacity regulations should be considered For example where a regulation allows two minutes of opacity measurements in excess of the standard, the State need only require the source to report all opacity measurements in excess of the standard during any one hour, minus the two-minute exemption. The excess measurements shall be reported in actual per cent opacity averaged for one clock minute or such other time period deemed appropriate by the State. Averages may be calculated either by arithmetically averaging a minimum of 4 equally spaced data points per minute or by integration of the monitor output.

Some commentors raised questions concerning the provisions in the proposed regulations which allow the use of fuel analysis for computing emissions of sulfur dioxide in lieu of installing a continuous monitoring device for this pollutant. Of primary concern with the fuel analysis approach among the commentors was the frequency of the analysis to determine the sulfur content of the fuel. However, upon inspection of the comments by the Agency, a more significant issue has been uncovered. The issue involves the determination of what constitutes excess emissions when a fuel analysis is used as the method to measure source emissions. For example, the sulfur content varies significantly within a load of coal, i.e., while the *average* sulfur content of a total load of coal may be within acceptable limits in relation to a control regulation which restricts the sulfur content of coal, it is probable that portions of the coal may have a sulfur content above the allowable level. Similarly, when fuel oils of different specific gravities are stored within a common tank, such fuel oils tend to stratify and may not be a homogeneous mixture. Thus, at times, fuel oil in excess of allowable limits may be combusted. The question which arises is whether the combustion of this higher sulfur coal or oil is a violation of an applicable sulfur content regulation. Initial investigations of this issue have indicated a relative lack of specificity on the subject.

The Agency is confronted with this problem not only in relation to specifying procedures for the emission reporting requirements for existing sources but also in relation to enforcement considerations for new sources affected by New Source Performance Standards. At this time, a more thorough investigation of the situation in necessary prior to promulgation of procedures dealing with fuel analysis for both oil and coal. At the conclusion of this investigation, the Agency will set forth its findings and provide guidance to State and local control agencies on this issue. In the meantime, the portion of the proposed regulations dealing with fuel analysis is being withheld from promulgation at this time. As such, States shall not be required to adopt provisions dealing with emission monitoring or reporting of sulfur dioxide emissions from those sources where the States may choose to allow the option of fuel analysis as an alternative to sulfur dioxide monitoring. However, since the fuel analysis alternative may not be utilized by a source that has installed sulfur dioxide control equipment (scrubbers), States shall set forth legally enforceable procedures which require emission monitors on such sources, where these emission monitoring regulations otherwise require their installation.

*Other Modifications to Proposed Regulations.* In addition to reducing the number of monitors required under the proposed regulations, a number of modifications to various procedures in the proposed regulations have been considered and are included in the final regulations. One modification which has been made is the deletion of the requirement to install continuous monitors at "the most representative" location. The final regulations require the placement of an emission monitor at "a representative" location in the exhaust gas system. In many cases "the most representative" location may be difficult to locate and may be inaccessible without new platforms, ladders, etc., being installed. Further, other representative locations can provide adequate information on pollutant emissions if minimum criteria for selection of monitoring locations are observed. Guidance in determining a representative sampling location is contained within the Performance Specification for each pollutant monitor in the emission monitoring regulations for New Source Performance Standards (Appendix B, Part 60 of this Chapter). While these criteria are designed for new sources, they are also useful in determining representative locations for existing sources.

A further modification to the proposed regulation is the deletion of the requirement for new performance tests when continuous emission monitoring equipment is modified or repaired. As proposed, the regulation would have required a new performance test whenever any part of the continuous emission monitoring system was replaced. This requirement was originally incorporated in the regulations to assure the use of a well-calibrated, finely tuned monitor. Commentors pointed out that the requirement of conducting new performance tests whenever any part of an instrument is changed or replaced is costly and in many cases not required. Upon evaluation of this comment, the Administrator concurs that performance tests are not required after each repair or replacement to the system. Appropriate changes have been made to the regulations to delete the requirements for new performance tests. However, the final regulations require the reporting of the various repairs made to the emission monitoring system during each quarter to the State. Further, the State must have procedures to require sources to report to the State on a quarterly basis information on the amount of time and the reason why the continuous monitor was not in operation. Also the State must have legally enforceable procedures to require a source to conduct a new performance test whenever, on the basis of available information, the State deems such test is necessary.

The time period proposed for the installation of the required monitoring system, i.e., one year after plan approval, was thought by 21 commentors to be too brief, primarily because of lack of available instruments, the lack of trained personnel and the time available for installation of the required monitors Equipment suppliers were contacted by the Agency and they confirmed the availability of emission monitors. However,

the Administrator has determined that the time necessary for purchase, installation and performance testing of such monitors may require more than one year for certain installations, especially where gaseous monitors are required. In order to provide sources with ample time, the Agency has modified the final regulations to allow States to adopt procedures that will provide sources 18 months after the approval or promulgation of the revised SIP to satisfy the installation and performance testing procedures required by these continuous monitoring regulations. A provision is also included to allow, on a case-by-case basis, additional extensions for sources where good faith efforts have been undertaken to purchase and install equipment, but where such installation cannot be accomplished within the time period prescribed by the regulations.

A number of State and local agencies also commented on the lack of time provided sources to install the monitors required by the proposed regulations. These agencies also indicated that they must acquire sufficient skilled manpower to implement the regulations, such as personnel to provide guidance to sources, to monitor performance tests and to analyze the emission data that are to be submitted by the sources. Further, some State agencies indicated that more than six months was needed to develop the necessary plan revisions. Most State agencies who commented stated that one year should be provided to allow States to revise their SIP's. The Administrator is aware of the various priorities which confront State and local agencies at this time (e.g., compliance schedules, enforcement actions, litigation proceedings, reevaluation of adequacy of SIP's to attain and maintain national standards, etc.) and, as such, believes that a six-month postponement in the submittal of plan revisions to require emission monitoring and reporting is justified and prudent. Hence, States must submit plan revisions to satisfy the requirements of this section within one year of promulgation of these regulations in the FEDERAL REGISTER. However, States are advised that such plan revisions may be submitted any time prior to the final date, and are encouraged to do so where possible.

The proposed regulations provided the States with the option of allowing sources to continue to use emission monitoring equipment that does not meet performance specifications set forth in the regulations for up to five years from the date of approval of the State regulations or EPA promulgation. Some commenters asked that this provision be extended indefinitely. In some cases they indicated they had recently purchased and had already installed monitoring systems which were only marginally away from meeting the applicable performance specifications. The Agency believes, however, that such a modification to the proposed regulations should not be allowed. It is believed that such a provision would result in inadequate monitoring systems being maintained after their useful life has ended. Though some monitoring systems will probably last longer than five years, it is believed that this time period will provide adequate time to amortize the cost of such equipment. In cases where existing emission monitors are known not to provide reasonable estimates of emissions, States should consider more stringent procedures to provide a more speedy retirement of such emission monitoring systems.

Some commentors raised the question of whether existing oxygen monitors which are installed in most fossil fuel-fired steam generating boilers to monitor excess oxygen for the purposes of combustion control could be used to satisfy the requirement for monitoring oxygen under the proposal. Upon investigation, it has been determined that, in some cases, such oxygen monitors may be used provided that they are located so that there is no influx of dilution air between the oxygen monitor and the continuous pollutant monitor. In some cases, it may be possible to install the continuous monitoring device at the same location as the existing oxygen monitor. Care should be taken, however, to assure that a representative sample is obtained. Because of the various possibilities that may arise concerning the usefulness of existing oxygen monitors, the State should determine, after a case-by-case review, the acceptability of existing oxygen monitors.

Another technical issue which was raised suggested that continuous emission monitors which provide direct measurements of pollutants in units comparable to the emission limitations and other devices not specifically identified in the proposed regulations are available for purchase and installation. The Agency is aware that various monitoring systems exist but has not as yet determined specific performance specifications for these monitoring systems that are directly applicable to the source categories covered by these regulations. However, it is not EPA's intent to deny the use of any equipment that can be demonstrated to be reliable and accurate. If monitors can be demonstrated to provide the same relative degree of accuracy and durability as provided by the performance specifications in Appendix B of Part 60, they shall generally be acceptable to satisfy the requirements of these regulations under Section 3.9 of Appendix P. Further, where alternative procedures (e.g., alternate procedures for conversion of data to units of applicable regulations) can be shown by the State to be equivalent to the procedures set forth in Appendix P of these regulations, then such alternate procedures may be submitted by the State for approval by EPA. Section 3.9 of Appendix P identifies certain examples where alternative emission monitoring systems or alternative procedures will generally be considered by the Agency for approval.

It should be noted that some sources may be unable to comply with the regulations because of technical difficulties, (e.g., the presence of condensed water vapor in the flue gas), physical limitations of accessibility at the plant facility, or, in other cases, because of extreme economic hardship. States should use their judgment in implementing these requirements in such cases. Section 6 of Appendix P of this Part provides various examples where the installation of continuous emission monitors would not be feasible or reasonable. In such cases alternate emission monitoring (and reporting) by more routine methods, such as manual stack testing, must be required. States in preparing their revised SIP must set forth and describe the criteria they will use to identify such unusual cases, and must further describe the alternative procedures they will implement to otherwise satisfy the intent of these regulations. States are advised that this provision is intended for unusual cases, and, as such, should not be widely applied.

It was pointed out by some commentors that carbon dioxide monitors could probably be used in lieu of oxygen monitors to provide information to convert emission data to the units of the applicable State regulation. Detailed discussion of the technical merits and limitations of this approach is discussed in the Preamble to the Part 60 Regulations. As pointed out in that Preamble, such monitors may be used in certain situations. Modifications have therefore been made to the Part 51 regulations to allow the use of such monitors which include references to technical specifications contained in Part 60 for carbon dioxide monitors. Also, the cycling time for oxygen monitors has been changed from one hour to 15 minutes to correspond to the specification in Part 60. The difference between cycling times in the two proposals was an oversight. The cycling time for carbon dioxide monitors will also be 15 minutes as in Part 60.

A number of other miscellaneous technical comments were also received. Commentors indicated that the proposed exemption for opacity monitoring requirements that may be granted to oil-fired and gas-fired steam generators should also apply to units burning a combination of these fuels. The Administrator concurs with this suggestion and an exemption for such sources burning oil and gas has ben provided in the final regulations subject to the same restrictions as are imposed on oil-fired steam generators.

As previously indicated, the regulations for emission monitoring for existing sources refer in many cases to the specific performance specifications set forth in the emission monitoring regulations for new sources affected by Part 60. Many of the comments received on the proposed regulations in effect pointed to issues affecting both proposals. In many cases, more specific technical issues are discussed in the Preamble to the Part 60 Regulations and as such the reader is referred to that Preamble. Specifically, the Part 60 Preamble addresses the following topics: data handling and reporting techniques; requirements for reporting repairs and replacement parts used; location of monitoring instruments, changes to span requirements, operating

frequency requirements, sulfuric acid and nitric acid plant conversion factors; and, for opacity monitoring equipment, changes in the cycling time and in alignment procedures. The reader is cautioned, however, that specific reference to regulations in the Part 60 Preamble is strictly to federal New Source Performance Regulations rather than State and local control agency regulations which affect existing sources and which are part of an applicable plan.

In addition to the many technical comments received, a number of legal issues were raised. Several commentors questioned EPA's statutory authority to promulgate these regulations and pointed out other alleged legal defects in the proposal. The Administrator has considered these comments, and has found them unpersuasive.

One commentor argued that new 40 CFR 51.19(e) will require "revisions" to existing state plans; that "revisions" may be called for under Section 110(a)(2)(H) of the Clean Air Act only where EPA has found that there are "improved or more expeditious methods" for achieving ambient standards or that a state plan is "substantially inadequate" to achieve the standards; that the new regulation is based upon neither of these findings; and that therefore there is no statutory authority for the regulation. This argument fails to take cognizance of Section 110(a)(2)(F)(ii) of the Act, which mandates that all state implementation plans contain self-monitoring requirements. The fact that EPA originally accepted plans without these requirements because of substantial uncertainty as to the reliability of self-monitoring equipment does not negate the mandate of the statute.

In essence, new § 51.19(e) does not call for "revisions" as contemplated by the Act, but for supplements to the original plans to make them complete. At any rate, it is the Administrator's judgment that the new self-monitoring requirements *will* result in a "more expeditious" achievement of the ambient standards. Since these requirements are valuable enforcement tools and indicators of malfunctions, they should lead to a net decrease in emissions.

Other commentors argued that even if EPA has statutory authority to require self-monitoring, it has no authority to impose specific minimum requirements for state plans, to require "continuous" monitoring, or to require monitoring of oxygen, which is not a pollutant. These comments fail to consider that a basic precept of administrative law is that an agency may fill in the broad directives of legislation with precise regulatory requirements. More specifically, the Administrator has authority under Section 301(a) of the Clean Air Act to promulgate "such regulations as are necessary to carry out his functions under the Act". Courts have long upheld the authority of agencies to promulgate more specific requirements than are set forth in enabling legislation, so long as the requirements are reasonably related to the purposes of the legislation. Since the Act requires self-monitoring without further guidance, EPA surely has the authority to set specific requirements in order to carry out its function of assuring that the Act is properly implemented.

In EPA's judgment, the requirements set forth in § 51.19(e) are necessary to assure that each state's self-monitoring program is sufficient to comply with the Act's mandate. The fact that oxygen and carbon dioxide are not air pollutants controlled under the Act is legally irrelevant, since in EPA's judgment, they must be monitored in order to convert measured emission data to units of emission standards.

Other commentors have argued that the self-monitoring requirements violate the protection against self-incrimination provided in the Fifth Amendment to the U.S. Constitution, and that the information obtained from the monitoring is so unreliable as to be invalid evidence for use in court.

There are two reasons why the self-incrimination argument is invalid. First, the self-incrimination privilege does not apply to corporations, and it is probable that a great majority of the sources covered by these requirements will be owned by corporations. Secondly, courts have continually recognized an exception to the privilege for "records required by law", such as the self-monitoring and reporting procedures which are required by the Clean Air Act. As to the validity of evidence issue, in EPA's opinion, the required performance specifications will assure that self-monitoring equipment will be sufficiently reliable to withstand attacks in court.

Finally, some comments reflected a misunderstanding of EPA's suggestion that states explore with counsel ways to draft their regulations so as to automatically incorporate by reference future additions to Appendix P and avoid the time-consuming plan revision process. (EPA pointed out that public participation would still be assured, since EPA's proposed revisions to Appendix P would always be subject to public comment on a nation-wide basis.)

EPA's purpose was merely to *suggest* an approach that a state may wish to follow *if* the approach would be legal under that state's law. EPA offers no opinion as to whether any state law would allow this. Such a determination is up to the individual states.

*Summary of Revisions and Clarifications to the Proposed Regulations.* Briefly, the revisions and clarifications to the proposed regulations include:

(1) A clarification to indicate that continuous emission monitors are not required for sources unless such sources are subject to an applicable emission limitation of an approved SIP.

(2) A revision to require emission monitors for oxides of nitrogen in only those AQCR's where the Administrator has specifically called for a control strategy for nitrogen dioxide.

(3) A revision to include a general provision to exempt any source that clearly demonstrates that it will cease operation within five years of the inclusion of monitoring requirements for the source in Appendix P.

(4) Revisions to exempt smaller-sized sources and infrequently used sources within the specified source categories.

(5) A revision to the data reporting requirements to require the submittal by the source of the State, emission data in excess of the applicable emission limitation for both opacity and gaseous pollutants, rather than all measured data, as proposed. A provision has been added to require information on the cause of all noted violations of applicable regulations.

(6) A clarification to indicate that the continuous monitoring of oxygen is not required unless the continuous monitoring of sulfur dioxide and/or nitrogen oxides emissions is required by the applicable SIP.

(7) A revision to allow the placement of continuous emission monitors at "a representative location" on the exhaust gas system rather than at "the most representative location" as required by the proposed regulations.

(8) A revision to delete the requirements of new performance tests each time the continuous monitoring equipment is repaired or modified. However, a new provision is included to require that a report of all repairs and maintenance performed during the quarter shall be reported by the source to the State.

(9) A modification to provide sources 18 months rather than one year after approval or promulgation of the revised SIP to comply with the continuous monitoring regulations adopted by the States.

(10) A modification to provide States one year, rather than the six months after the promulgation of these regulations in the FEDERAL REGISTER to submit plan revisions to satisfy the requirements promulgated herein.

*Requirements of States.* States shall be required to revise their SIP's by October 6, 1976 to include legally enforceable procedures to require emission monitoring, recording and reporting, as a minimum for those sources specified in the regulations promulgated herein. While minimum requirements have been established, States may, as they deem appropriate, expand these requirements.

The regulations promulgated herein have been revised in light of the various comments to generally provide a more limited introduction into this new methodology. Cooperation among affected parties, i.e., State and local control agencies, sources, instrument manufacturers and suppliers, and this Agency is necessary to move successfully forward in these areas of emission monitoring and reporting prescribed in the Clean Air Act. Assistance can be obtained from the EPA Regional Offices in relation to the technical and procedural aspects of these regulations.

Copies of documents referenced in this Preamble are available for public inspection at the EPA Freedom of Information Center, 401 M Street, S.W., Washington, D.C. 20460. The Agency has not prepared an environmental impact statement for these regulations since they

were proposed (September 11, 1974) prior to the effective date for requiring voluntary environmental impact statements on EPA's regulatory actions (see 39 FR 16186, May 7, 1974).

The regulations set forth below are promulgated under the authority of sections 110(a)(2)(F)(ii)-(iii) and 301(a) of the Clean Air Act, as amended [42 U.S.C. 1857c-5(a)(2)(F)(ii)-(iii), 1857g (a)] and are effective November 5, 1975.

Dated: September 23, 1975.

JOHN QUARLES,
*Acting Administrator.*

REFERENCES

1. Jenkins, R. E., Strategies and Air Standards Division, OAQPS, EPA. Memo to R. L. Ajax, Emission Standards and Engineering Division, OAQPS, EPA, Emission Monitoring Costs. February 27, 1975.

2. Young, D. E., Control Programs Development Division, OAQPS, EPA. Memo to E. J. Lillis, Control Programs Development Division, OAQPS, EPA, Emission Source Data for In-Stack Monitoring Regulations. June 4, 1975.

1. Section 51.1 is amended by adding paragraphs (z), (aa), (bb), (cc), (dd), and (ee) as follows:

**§ 51.1 Definitions.**

* * * * *

(z) "Emission standard" means a regulation (or portion thereof) setting forth an allowable rate of emissions, level of opacity, or prescribing equipment or fuel specifications that result in control of air pollution emissions.

(aa) "Capacity factor" means the ratio of the average load on a machine or equipment for the period of time considered to the capacity rating of the machine or equipment.

(bb) "Excess emissions" means emissions of an air pollutant in excess of an emission standard.

(cc) "Nitric acid plant" means any facility producing nitric acid 30 to 70 percent in strength by either the pressure or atmospheric pressure process.

(dd) "Sulfuric acid plant" means any facility producing sulfuric acid by the contact process by burning elemental sulfur, alkylation acid, hydrogen sulfide, or acid sludge, but does not include facilities where conversion to sulfuric acid is utilized primarily as a means of preventing emissions to the atmosphere of sulfur dioxide or other sulfur compounds.

(ee) "Fossil fuel-fired steam generator" means a furnace or boiler used in the process of burning fossil fuel for the primary purpose of producing steam by heat transfer.

2. Section 51.19 is amended by adding paragraph (e) as follows:

**§ 51.19 Source surveillance.**

* * * * *

(e) Legally enforceable procedures to require stationary sources subject to emission standards as part of an applicable plan to install, calibrate, maintain, and operate equipment for continuously monitoring and recording emissions; and to provide other information as specified in Appendix P of this part.

(1) Such procedures shall identify the types of sources, by source category and capacity, that must install such instruments, and shall identify for each source category the pollutants which must be monitored.

(2) Such procedures shall, as a minimum, require the types of sources set forth in Appendix P of this part (as such appendix may be amended from time to time) to meet the applicable requirements set forth therein.

(3) Such procedures shall contain provisions which require the owner or operator of each source subject to continuous emission monitoring and recording requirements to maintain a file of all pertinent information. Such information shall include emission measurements, continuous monitoring system performance testing measurements, performance evaluations, calibration checks, and adjustments and maintenance performed on such monitoring systems and other reports and records required by Appendix P of this Part for at least two years following the date of such measurements or maintenance.

(4) Such procedures shall require the source owner or operator to submit information relating to emissions and operation of the emission monitors to the State to the extent described in Appendix P as frequently or more frequently as described therein.

(5) Such procedures shall provide that sources subject to the requirements of § 51.19(e)(2) of this section shall have installed all necessary equipment and shall have begun monitoring and recording within 18 months of (1) the approval of a State plan requiring monitoring for that source or (2) promulgation by the Agency of monitoring requirements for that source. However, sources that have made good faith efforts to purchase, install, and begin the monitoring and recording of emission data but who have been unable to complete such installation within the time period provided may be given reasonable extensions of time as deemed appropriate by the State.

(6) States shall submit revisions to the applicable plan which implement the provisions of this section by October 6, 1976.

3. In Part 51, Appendix P is added as follows:

* * * * *

APPENDIX P—MINIMUM EMISSION MONITORING REQUIREMENTS

1.0 Purpose. This Appendix P sets forth the minimum requirements for continuous emission monitoring and recording that each State Implementation Plan must include in order to be approved under the provisions of 40 CFR 51.19(e). These requirements include the source categories to be affected; emission monitoring, recording, and reporting requirements for these sources; performance specifications for accuracy, reliability, and durability of acceptable monitoring systems; and techniques to convert emission data to units of the applicable State emission standard. Such data must be reported to the State as an indication of whether proper maintenance and operating procedures are being utilized by source operators to maintain emission levels at or below emission standards. Such data may be used directly or indirectly for compliance determination or any other purpose deemed appropriate by the State. Though the monitoring requirements are specified in detail, States are given some flexibility to resolve difficulties that may arise during the implementation of these regulations.

1.1 *Applicability.*

The State plan shall require the owner or operator of an emission source in a category listed in this Appendix to: (1) install, calibrate, operate, and maintain all monitoring equipment necessary for continuously monitoring the pollutants specified in this Appendix for the applicable source category; and (2) complete the installation and performance tests of such equipment and begin monitoring and recording within 18 months of plan approval or promulgation. The source categories and the respective monitoring requirements are listed below.

1.1.1 Fossil fuel-fired steam generators, as specified in paragraph 2.1 of this appendix, shall be monitored for opacity, nitrogen oxides emissions, sulfur dioxide emissions, and oxygen or carbon dioxide.

1.1.2 Fluid bed catalytic cracking unit catalyst regenerators, as specified in paragraph 2.4 of this appendix, shall be monitored for opacity.

1.1.3 Sulfuric acid plants, as specified in paragraph 2.3 of this appendix, shall be monitored for sulfur dioxide emissions.

1.1.4 Nitric acid plants, as specified in paragraph 2.2 of this appendix, shall be monitored for nitrogen oxides emissions.

1.2 *Exemptions.*

The States may include provisions within their regulations to grant exemptions from the monitoring requirements of paragraph 1.1 of this appendix for any source which is:

1.2.1 subject to a new source performance standard promulgated in 40 CFR Part 60 pursuant to Section 111 of the Clean Air Act; or

1.2.2 not subject to an applicable emission standard of an approved plan; or

1.2.3 scheduled for retirement within 5 years after inclusion of monitoring requirements for the source in Appendix P, provided that adequate evidence and guarantees are provided that clearly show that the source will cease operations prior to such date

1.3 *Extensions.*

States may allow reasonable extensions of the time provided for installation of monitors for facilities unable to meet the prescribed timeframe (i.e., 18 months from plan approval or promulgation) provided the owner or operator of such facility demonstrates that good faith efforts have been made to obtain and install such devices within such prescribed timeframe.

1.4 *Monitoring System Malfunction*

The State plan may provide a temporary exemption from the monitoring and reporting requirements of this appendix during any period of monitoring system malfunction, provided that the source owner or operator shows, to the satisfaction of the State, that the malfunction was unavoidable and is being repaired as expeditiously as practicable

2.0 *Minimum Monitoring Requirement*

States must, as a minimum, require the sources listed in paragraph 1.1 of this appendix to meet the following basic requirements

2.1 *Fossil fuel-fired steam generators*

Each fossil fuel-fired steam generator, except as provided in the following subparagraphs, with an annual average capacity factor of greater than 30 percent, as reported to the Federal Power Commission for calendar year 1974, or as otherwise demonstrated to the State by the owner or operator, shall conform with the following monitoring requirements when such facility is subject to an emission standard of an applicable plan for the pollutant in question

2.1.1 A continuous monitoring system for the measurement of opacity which meets the performance specifications of paragraph 3.1.1 of this appendix shall be installed, calibrated, maintained, and operated in accordance with the procedures of this appendix by the owner or operator of any such steam generator of greater than 250 million BTU per hour heat input except where:

2.1.1.1 gaseous fuel is the only fuel burned, or

2.1.1.2 oil or a mixture of gas and oil are the only fuels burned and the source is able to comply with the applicable particulate matter and opacity regulations without utilization of particulate matter collection equipment, and where the source has never been found, through any administrative or judicial proceedings, to be in violation of any visible emission standard of the applicable plan.

2.1.2 A continuous monitoring system for the measurement of sulfur dioxide which meets the performance specifications of paragraph 3.1.3 of this appendix shall be installed, calibrated, maintained, and operated on any fossil fuel-fired steam generator of greater than 250 million BTU per hour heat input which has installed sulfur dioxide pollutant control equipment.

2.1.3 A continuous monitoring system for the measurement of nitrogen oxides which meets the performance specification of paragraph 3.1.2 of this appendix shall be installed, calibrated, maintained, and operated on fossil fuel-fired steam generators of greater than 1000 million BTU per hour heat input when such facility is located in an Air Quality Control Region where the Administrator has specifically determined that a control strategy for nitrogen dioxide is necessary to attain the national standards, unless the source owner or operator demonstrates during source compliance tests as required by the State that such a source emits nitrogen oxides at levels 30 percent or more below the emission standard within the applicable plan.

2.1.4 A continuous monitoring system for the measurement of the percent oxygen or carbon dioxide which meets the performance specifications of paragraphs 3.1.4 or 3.1.5 of this appendix shall be installed, calibrated, operated, and maintained on fossil fuel-fired steam generators where measurements of oxygen or carbon dioxide in the flue gas are required to convert either sulfur dioxide or nitrogen oxides continuous emission monitoring data, or both, to units of the emission standard within the applicable plan.

2.2 *Nitric acid plants.*

Each nitric acid plant of greater than 300 tons per day production capacity, the production capacity being expressed as 100 percent acid, located in an Air Quality Control Region where the Administrator has specifically determined that a control strategy for nitrogen dioxide is necessary to attain the national standard shall install, calibrate, maintain, and operate a continuous monitoring system for the measurement of nitrogen oxides which meets the performance specifications of paragraph 3.1.2 for each nitric acid producing facility within such plan.

2.3 *Sulfuric acid plants.*

Each Sulfuric acid plant of greater than 300 tons per day production capacity, the production being expressed as 100 percent acid, shall install, calibrate, maintain and operate a continuous monitoring system for the measurement of sulfur dioxide which meets the performance specifications of 3.1.3 for each sulfuric acid producing facility within such plant.

2.4 *Fluid bed catalytic cracking unit catalyst regenerators at petroleum refineries.*

Each catalyst regenerator for fluid bed catalytic cracking units of greater than 20,000 barrels per day fresh feed capacity shall install, calibrate, maintain, and operate a continuous monitoring system for the measurement of opacity which meets the performance specifications of 3.1.1.

3.0 *Minimum specifications.*

All State plans shall require owners or operators of monitoring equipment installed to comply with this Appendix, except as provided in paragraph 3.2, to demonstrate compliance with the following performance specifications.

3.1 *Performance specifications.*

The performance specifications set forth in Appendix B of Part 60 are incorporated herein by reference, and shall be used by States to determine acceptability of monitoring equipment installed pursuant to this Appendix except that (1) where reference is made to the "Administrator" in Appendix B, Part 60, the term "State" should be inserted for the purpose of this Appendix (e.g., in Performance Specification 1, 1.2, ". . . monitoring systems subject to approval by the *Administrator*," should be interpreted as, ". . . monitoring systems subject to approval by the *State*"), and (2) where reference is made to the "Reference Method" in Appendix B, Part 60, the State may allow the use of either the State approved reference method or the Federally approved reference method as published in Part 60 of this Chapter. The Performance Specifications to be used with each type of monitoring system are listed below.

3.1.1 Continuous monitoring systems for measuring opacity shall comply with Performance Specification 1.

3.1.2 Continuous monitoring systems for measuring nitrogen oxides shall comply with Performance Specification 2.

3.1.3 Continuous monitoring systems for measuring sulfur dioxide shall comply with Performance Specification 2.

3.1.4 Continuous monitoring systems for measuring oxygen shall comply with Performance Specification 3.

3.1.5 Continuous monitoring systems for measuring carbon dioxide shall comply with Performance Specification 3.

3.2 *Exemptions.*

Any source which has purchased an emission monitoring system(s) prior to September 11, 1974, may be exempt from meeting such test procedures prescribed in Appendix B of Part 60 for a period not to exceed five years from plan approval or promulgation.

3.3 *Calibration Gases.*

For nitrogen oxides monitoring systems installed on fossil fuel-fired steam generators the pollutant gas used to prepare calibration gas mixtures (Section 2.1, Performance Specification 2, Appendix B, Part 60) shall be nitric oxide (NO). For nitrogen oxides monitoring systems, installed on nitric acid plants the pollutant gas used to prepare calibration gas mixtures (Section 2.1, Performance Specification 2, Appendix B, Part 60 of this Chapter) shall be nitrogen dioxide ($NO_2$). These gases shall also be used for daily checks under paragraph 3.7 of this appendix as applicable. For sulfur dioxide monitoring systems installed on fossil fuel-fired steam generators or sulfuric acid plants the pollutant gas used to prepare calibration gas mixtures (Section 2.1, Performance Specification 2, Appendix B, Part 60 of this Chapter) shall be sulfur dioxide ($SO_2$). Span and zero gases should be traceable to National Bureau of Standards reference gases whenever these reference gases are available. Every six months from date of manufacture, span and zero gases shall be reanalyzed by conducting triplicate analyses using the reference methods in Appendix A, Part 60 of this chapter as follows: for sulfur dioxide, use Reference Method 6; for nitrogen oxides, use Reference Method 7; and for carbon dioxide or oxygen, use Reference Method 3. The gases may be analyzed at less frequent intervals if longer shelf lives are guaranteed by the manufacturer.

3.4 *Cycling times.*

Cycling times include the total time a monitoring system requires to sample, analyze and record an emission measurement.

3.4.1 Continuous monitoring systems for measuring opacity shall complete a minimum of one cycle of operation (sampling, analyzing, and data recording) for each successive 10-second period.

3.4.2 Continuous monitoring systems for measuring oxides of nitrogen, carbon dioxide, oxygen, or sulfur dioxide shall complete a minimum of one cycle of operation (sampling, analyzing, and data recording) for each successive 15-minute period.

3.5 *Monitor location.*

State plans shall require all continuous monitoring systems or monitoring devices to be installed such that representative measurements of emissions or process parameters (i.e., oxygen, or carbon dioxide) from the affected facility are obtained. Additional guidance for location of continuous monitoring systems to obtain representative samples are contained in the applicable Performance Specifications of Appendix B of Part 60 of this Chapter.

3.6 *Combined effluents.*

When the effluents from two or more affected facilities of similar design and operating characteristics are combined before being released to the atmosphere, the State plan may allow monitoring systems to be installed on the combined effluent. When the affected facilities are not of similar design and operating characteristics, or when the effluent from one affected facility is released to the atmosphere through more than one point, the State should establish alternate procedures to implement the intent of these requirements.

3.7 *Zero and drift.*

State plans shall require owners or operators of all continuous monitoring systems installed in accordance with the requirements of this Appendix to record the zero and span drift in accordance with the method prescribed by the manufacturer of such instruments; to subject the instruments to the manufacturer's recommended zero and span check at least once daily unless the manufacturer has recommended adjustments at shorter intervals, in which case such recommendations shall be followed; to adjust the zero and span whenever the 24-hour zero drift or 24-hour calibration drift limits of the applicable performance specifications in Appendix B of Part 60 are exceeded; and to adjust continuous monitoring systems referenced by paragraph 3.2 of this Appendix whenever the 24-hour zero drift or 24-hour calibration drift exceed 10 percent of the emission standard.

3.8 *Span.*

Instrument span should be approximately 200 per cent of the expected instrument data display output corresponding to the emission standard for the source.

3.9 *Alternative procedures and requirements.*

In cases where States wish to utilize different, but equivalent, procedures and requirements for continuous monitoring systems, the State plan must provide a description of such alternative proceduers for approval by the Administrator. Some examples of situations that may require alternatives follow:

3.9.1 Alternative monitoring requirements to accommodate continuous monitoring systems that require corrections for stack moisture conditions (e.g., an instrument measuring steam generator $SO_2$ emissions on a wet basis could be used with an instrument measuring oxygen concentration on a dry basis if acceptable methods of measuring stack moisture conditions are used to allow ac-

curate adjustment of the measured $SO_2$ concentration to dry basis.)

3.9.2 Alternative locations for installing continuous monitoring systems or monitoring devices when the owner or operator can demonstrate that installation at alternative locations will enable accurate and representative measurements.

3.9.3 Alternative procedures for performing calibration checks (e.g., some instruments may demonstrate superior drift characteristics that require checking at less frequent intervals).

3.9.4 Alternative monitoring requirements when the effluent from one affected facility or the combined effluent from two or more identical affected facilities is released to the atmosphere through more than one point (e.g., an extractive, gaseous monitoring system used at several points may be approved if the procedures recommended are suitable for generating accurate emission averages).

3.9.5 Alternative continuous monitoring systems that do not meet the spectral response requirements in Performance Specification 1, Appendix B of Part 60, but adequately demonstrate a definite and consistent relationship between their measurements and the opacity measurements of a system complying with the requirements in Performance Specification 1. The State may require that such demonstration be performed for each affected facility.

4.0 *Minimum data requirements.*

The following paragraphs set forth the minimum data reporting requirements necessary to comply with § 51.19(e) (3) and (4).

4.1 The State plan shall require owners or operators of facilities required to install continuous monitoring systems to submit a written report of excess emissions for each calendar quarter and the nature and cause of the excess emissions, if known. The averaging period used for data reporting should be established by the State to correspond to the averaging period specified in the emission test method used to determine compliance with an emission standard for the pollutant, source category in question. The required report shall include, as a minimum, the data stipulated in this Appendix.

4.2 For opacity measurements, the summary shall consist of the magnitude in actual percent opacity of all one-minute (or such other time period deemed appropriate by the State) averages of opacity greater than the opacity standard in the applicable plan for each hour of operation of the facility. Average values may be obtained by integration over the averaging period or by arithmetically averaging a minimum of four equally spaced, instantaneous opacity measurements per minute. Any time period exempted shall be considered before determining the excess averages of opacity (e.g., whenever a regulation allows two minutes of opacity measurements in excess of the standard, the State shall require the source to report all opacity averages, in any one hour, in excess of the standard, minus the two-minute exemption). If more than one opacity standard applies, excess emissions data must be submitted in relation to all such standards.

4.3 For gaseous measurements the summary shall consist of emission averages, in the units of the applicable standard, for each averaging period during which the applicable standard was exceeded.

4.4 The date and time identifying each period during which the continuous monitoring system was inoperative, except for zero and span checks, and the nature of system repairs or adjustments shall be reported. The State may require proof of continuous monitoring system performance whenever system repairs or adjustments have been made.

4.5 When no excess emissions have occurred and the continuous monitoring system(s) have not been inoperative, repaired, or adjusted, such information shall be included in the report.

4.6 The State plan shall require owners or operators of affected facilities to maintain a file of all information reported in the quarterly summaries, and all other data collected either by the continuous monitoring system or as necessary to convert monitoring data to the units of the applicable standard for a minimum of two years from the date of collection of such data or submission of such summaries.

5.0 *Data Reduction.*

The State plan shall require owners or operators of affected facilities to use the following procedures for converting monitoring data to units of the standard where necessary.

5.1 For fossil fuel-fired steam generators the following procedures shall be used to convert gaseous emission monitoring data in parts per million to g/million cal (lb/million BTU) where necessary:

5.1.1 When the owner or operator of a fossil fuel-fired steam generator elects under subparagraph 2.1.4 of this Appendix to measure oxygen in the flue gases, the measurements of the pollutant concentration and oxygen concentration shall each be on a dry basis and the following conversion procedure used:

$$E = CF\left(\frac{20.9}{20.9 - \%O_2}\right)$$

5.1.2 When the owner or operator elects under subparagraph 2.1.4 of this Appendix to measure carbon dioxide in the flue gases, the measurement of the pollutant concentration and the carbon dioxide concentration shall each be on a consistent basis (wet or dry) and the following conversion procedure used:

$$E = CF_c\left(\frac{100}{\%\ CO_2}\right)$$

5.1.3 The values used in the equations under paragraph 5.1 are derived as follows:

E = pollutant emission, g/million cal (lb/million BTU),

C = pollutant concentration, g/dscm (lb/dscf), determined by multiplying the average concentration (ppm) for each hourly period by $4.16 \times 10^{-5}$ M g/dscm per ppm ($2.64 \times 10^{-9}$ M lb/dscf per ppm) where M = pollutant molecular weight, g/g-mole (lb/lb-mole). M = 64 for sulfur dioxide and 46 for oxides of nitrogen.

$\%O_2$, $\%CO_2$ = Oxygen or carbon dioxide volume (expressed as percent) determined with equipment specified under paragraph 4.1.4 of this appendix.

F, $F_c$ = a factor representing a ratio of the volume of dry flue gases generated to the calorific value of the fuel combusted (F), and a factor representing a ratio of the volume of carbon dioxide generated to the calorific value of the fuel combusted ($F_c$) respectively. Values of F and $F_c$ are given in § 60.45(f) of Part 60, as applicable.

5.2 For sulfuric acid plants the owner or operator shall:

5.2.1 establish a conversion factor three times daily according to the procedures to § 60.84(b) of this chapter;

5.2.2 multiply the conversion factor by the average sulfur dioxide concentration in the flue gases to obtain average sulfur dioxide emissions in Kg/metric ton (lb/short ton), and

5.2.3 report the average sulfur dioxide emission for each averaging period in excess of the applicable emission standard in the quarterly summary.

5.3 For nitric acid plants the owner or operator shall:

5.3.1 establish a conversion factor according to the procedures of § 60.73(b) of this chapter.

5.3.2 multiply the conversion factor by the average nitrogen oxides concentration in the flue gases to obtain the nitrogen oxides emissions in the units of the applicable standard;

5.3.3 report the average nitrogen oxides emission for each averaging period in excess of the applicable emission standard, in the quarterly summary.

5.4 Any State may allow data reporting or reduction procedures varying from those set forth in this Appendix if the owner or operator of a source shows to the satisfaction of the State that his procedures are at least as accurate as those in this Appendix. Such procedures may include but are not limited to, the following:

5.4.1 Alternative procedures for computing emission averages that do not require integration of data (e.g., some facilities may demonstrate that the variability of their emissions is sufficiently small to allow accurate reduction of data based upon computing averages from equally spaced data points over the averaging period).

5.4.2 Alternative methods of converting pollutant concentration measurements to the units of the emission standards.

6.0 *Special Consideration.*

The State plan may provide for approval, on a case-by-case basis, of alternative monitoring requirements different from the provisions of Parts 1 through 5 of this Appendix if the provisions of this Appendix (i.e., the installation of a continuous emission monitoring system) cannot be implemented by a source due to physical plant limitations or extreme economic reasons. To make use of this provision, States must include in their plan specific criteria for determining those physical limitations or extreme economic situations to be considered by the State. In such cases, when the State exempts any source subject to this Appendix by use of this provision from installing continuous emission monitoring systems, the State shall set forth alternative emission monitoring and reporting requirements (e.g., periodic manual stack tests) to satisfy the intent of these regulations. Examples of such special cases include, but are not limited to, the following:

6.1 Alternative monitoring requirements may be prescribed when installation of a continuous monitoring system or monitoring device specified by this Appendix would not provide accurate determinations of emissions (e.g., condensed, uncombined water vapor may prevent an accurate determination of opacity using commercially available continuous monitoring systems).

6.2 Alternative monitoring requirements may be prescribed when the affected facility is infrequently operated (e.g., some affected facilities may operate less than one month per year).

6.3 Alternative monitoring requirements may be prescribed when the State determines that the requirements of this Appendix would impose an extreme economic burden on the source owner or operator.

6.4 Alternative monitoring requirements may be prescribed when the State determines that monitoring systems prescribed by this Appendix cannot be installed due to physical limitations at the facility.

[FR Doc 75-26566 Filed 10-3-75,8:45 am]

[FRL 423-7]

## PART 60—STANDARDS OF PERFORMANCE FOR NEW STATIONARY SOURCES

### Emission Monitoring Requirements and Revisions to Performance Testing Methods

On September 11, 1974 (39 FR 32852), the Environmental Protection Agency (EPA) proposed revisions to 40 CFR Part 60, Standards of Performance for New Stationary Sources, to establish specific requirements pertaining to continuous emission monitoring system performance specifications, operating procedures, data. These requirements would apply to new and modified facilities covered under Part 60, but would not apply to existing facilities.

Simultaneously (39 FR 32871), the Agency proposed revisions to 40 CFR Part 51, Requirements for the Preparation, Adoption, and Submittal of Implementation Plans, which would require States to revise their State Implementation Plans (SIP's) to include legal enforceable procedures requiring certain specified stationary sources to monitor emissions on a continuous basis. These requirements would apply to existing facilities, which are not covered under Part 60.

Interested parties participated in the rulemaking by sending comments to EPA. A total of 105 comment letters were received on the proposed revisions to Part 60 from monitoring equipment manufacturers, data processing equipment manufacturers, industrial users of monitoring equipment, air pollution control agencies including State, local, and EPA regional offices, other Federal agencies, and consultants. Copies of the comment letters received and a summary of the issues and EPA's responses are available for inspection and copying at the U.S. Environmental Protection Agency, Public Information Reference Unit, Room 2922 (EPA Library), 401 M Street, S.W., Washington, D.C. In addition, copies of the issue summary and EPA responses may be obtained upon written request from the EPA Public Information Center (PM-215), 401 M Street, S.W., Washington, D.C. 20460 (specify Public Comment Summary: Emission Monitoring Requirements). The comments have been carefully considered, additional information has been collected and assessed, and where determined by the Administrator to be appropriate, changes have been made to the proposed regulations. These changes are incorporated in the regulations promulgated herein.

#### Background

At the time the regulations were proposed (September 11, 1974), EPA had promulgated 12 standards of performance for new stationary sources under section 111 of the Clean Air Act, as amended, four of which required the affected facilities to install and operate systems which continuously monitor the levels of pollutant emissions, where the technical feasibility exists using currently available continuous monitoring technology, and where the cost of the systems is reasonable. When the four standards that require monitoring systems were promulgated, EPA had limited knowledge about the operation of such systems because only a few systems had been installed; thus, the requirements were specified in general terms. EPA initiated a program to develop performance specifications and obtain information on the operation of continuous monitoring systems. The program was designed to assess the systems' accuracy, reliability, costs, and problems related to installation, operation, maintenance, and data handling. The proposed regulations (39 FR 32852) were based on the results of this program.

The purpose of regulations promulgated herein is to establish minimum performance specifications for continuous monitoring systems, minimum data reduction requirements, operating procedures, and reporting requirements for those affected facilities required to install continuous monitoring systems. The specifications and procedures are designed to assure that the data obtained from continuous monitoring systems will be accurate and reliable and provide the necessary information for determining whether an owner or operator is following proper operation and maintenance procedures.

#### Significant Comments and Changes Made To Proposed Regulations

Many of the comment letters received by EPA contained multiple comments. The most significant comments and the differences between the proposed and final regulations are discussed below.

(1) Subpart A—General Provisions. The greatest number of comments received pertained to the methodology and expense of obtaining and reporting continuous monitoring system emission data. Both air pollution control agencies and affected users of monitoring equipment presented the view that the proposed regulations requiring that all emission data be reported were excessive, and that reports of only excess emissions and retention of all the data for two years on the affected facility's premises is sufficient. Twenty-five commentators suggested that the effectiveness of the operation and maintenance of an affected facility and its air pollution control system could be determined by reporting only excess emissions. Fifteen others recommended deleting the reporting requirements entirely.

EPA has reviewed these comments and has contacted vendors of monitoring and data acquisition equipment for additional information to more fully assess the impact of the proposed reporting requirements. Consideration was also given to the resources that would be required of EPA to enforce the proposed requirement, the costs that would be incurred by an affected source, and the effectiveness of the proposed requirement in comparison with a requirement to report only excess emissions. EPA concluded that reporting only excess emissions would assure proper operation and maintenance of the air pollution control equipment and would result in lower costs to the source and allow more effective use of EPA resources by eliminating the need for handling and storing large amounts of data. Therefore, the regulation promulgated herein requires owners or operators to report only excess emissions and to maintain a permanent record of all emission data for a period of two years.

In addition, the proposed specification of minimum data reduction procedures has been changed. Rather than requiring integrated averages as proposed, the regulations promulgated herein also specify a method by which a minimum number of data points may be used to compute average emission rates. For example, average opacity emissions over a six-minute period may be calculated from a minimum of 24 data points equally spaced over each six-minute period. Any number of equally spaced data points in excess of 24 or continuously integrated data may also be used to compute six-minute averages. This specification of minimum computation requirements combined with the requirement to report only excess emissions provides source owners and operators with maximum flexibility to select from a wide choice of optional data reduction procedures. Sources which monitor only opacity and which infrequently experience excess emissions may choose to utilize strip chart recorders, with or without continuous six-minute integrators; whereas sources monitoring two or more pollutants plus other parameters necessary to convert to units of the emission standard may choose to utilize existing computers or electronic data processes incorporated with the monitoring system. All data must be retained for two years, but only excess emissions need be reduced to units of the standard. However, in order to report excess emissions, adequate procedures must be utilized to insure that excess emissions are identified. Here again, certain sources with minimal excess emissions can determine excess emissions by review of strip charts, while sources with varying emission and excess air rates will most likely need to reduce all data to units of the standard to identify any excess emissions. The regulations promulgated herein allow the use of extractive, gaseous monitoring systems on a time sharing basis by installing sampling probes at several locations, provided the minimum number of data points (four per hour) are obtained.

Several commentators stated that the averaging periods for reduction of monitoring data, especially opacity, were too short and would result in an excessive amount of data that must be reduced and recorded. EPA evaluated these comments and concluded that to be useful to source owners and operators as well as enforcement agencies, the averaging time for the continuous monitoring data should be reasonably consistent with the averaging time for the reference methods used during performance tests. The data reduction requirements for opacity have been substantially reduced because the averaging period was changed from one

minute, which was proposed, to six minutes to be consistent with revisions made to Method 9 (39 FR 39872)

Numerous comments were received on proposed § 60.13 which resulted in several changes. The proposed section has been reorganized and revised in several respects to accommodate the comments and provide clarity, to more specifically delineate the equipment subject to Performance Specifications in Appendix B, and to more specifically define requirements for equipment purchased prior to September 11, 1974. The provisions in § 60.13 are not intended to prevent the use of any equipment that can be demonstrated to be reliable and accurate; therefore, the performance of monitoring systems is specified in general terms with minimal references to specific equipment types. The provisions in § 60.13(i) are included to allow owners or operators and equipment vendors to apply to the Administrator for approval to use alternative equipment or procedures when equipment capable of producing accurate results may not be commercially available (e.g. condensed water vapor interferes with measurement of opacity), when unusual circumstances may justify less costly procedures, or when the owner or operator or equipment vendor may simply prefer to use other equipment or procedures that are consistent with his current practices.

Several paragraphs in § 60.13 have been changed on the basis of the comments received. In response to comments that the monitor operating frequency requirements did not consider periods when the monitor is inoperative or undergoing maintenance, calibration, and adjustment, the operating frequency requirements have been changed. Also the frequency of cycling requirement for opacity monitors has been changed to be consistent with the response time requirement in Performance Specification 1, which reflects the capability of commercially available equipment.

A second area that received comment concerns maintenance performed upon continuous monitoring systems. Six commentators noted that the proposed regulation requiring extensive retesting of continuous monitoring systems for all minor failures would discourage proper maintenance of the systems. Two other commentators noted the difficulty of determining a general list of critical components, the replacement of which would automatically require a retest of the system. Nevertheless, it is EPA's opinion that some control must be exercised to insure that a suitable monitoring system is not rendered unsuitable by substantial alteration or a lack of needed maintenance. Accordingly, the regulations promulgated herein require that owners or operators submit with the quarterly report information on any repairs or modifications made to the system during the reporting period. Based upon this information, the Administrator may review the status of the monitoring system with the owner or operator and, if determined to be necessary, require retesting of the continuous monitoring system(s).

Several commentators noted that the proposed reporting requirements are unnecessary for affected facilities not required to install continuous monitoring systems. Consequently, the regulations promulgated herein do not contain the requirements.

Numerous comments were received which indicated that some monitoring systems may not be compatible with the proposed test procedures and requirements. The comments were evaluated and, where appropriate, the proposed test procedures and requirements were changed. The procedures and requirements promulgated herein are applicable to the majority of acceptable systems; however, EPA recognizes that there may be some acceptable systems available now or in the future which could not meet the requirements. Because of this, the regulations promulgated herein include a provision which allows the Administrator to approve alternative testing procedures. Eleven commentators noted that adjustment of the monitoring instruments may not be necessary as a result of daily zero and span checks. Accordingly, the regulations promulgated herein require adjustments only when applicable 24-hour drift limits are exceeded. Four commentators stated that it is not necessary to introduce calibration gases near the probe tips. EPA has demonstrated in field evaluations that this requirement is necessary in order to assure accurate results; therefore, the requirement has been retained. The requirement enables detection of any dilution or absorption of pollutant gas by the plumbing and conditioning systems prior to the pollutant gas entering the gas analyzer.

Provisions have been added to these regulations to require that the gas mixtures used for the daily calibration check of extractive continuous monitoring systems be traceable to National Bureau of Standards (NBS) reference gases. Calibration gases used to conduct system evaluations under Appendix B must either be analyzed prior to use or shown to be traceable to NBS materials. This traceability requirement will assure the accuracy of the calibration gas mixtures and the comparability of data from systems at all locations. These traceability requirements will not be applied whenever the NBS materials are not available. A list of available NBS Standard Reference Materials may be obtained from the Office of Standard Reference Materials, Room B311, Chemistry Building, National Bureau of Standards, Washington, D.C. 20234.

Recertification of the continued accuracy of the calibration gas mixtures is also necessary and should be performed at intervals recommended by the calibration gas mixture manufacturer. The NBS materials and calibration gas mixtures traceable to these materials should not be used after expiration of their stated shelf-life. Manufacturers of calibration gas mixtures generally use NBS materials for traceability purposes, therefore, these amendments to the regulations will not impose additional requirements upon most manufacturers.

(2) Subpart D—Fossil-Fuel Fired Steam Generators. Eighteen commentators had questions or remarks concerning the proposed revisions dealing with fuel analysis. The evaluation of these comments and discussions with coal suppliers and electric utility companies led the Agency to conclude that the proposed provisions for fuel analysis are not adequate or consistent with the current fuel situation. An attempt was made to revise the proposed provisions; however, it became apparent that an in-depth study would be necessary before meaningful provisions could be developed. The Agency has decided to promulgate all of the regulations except those dealing with fuel analysis. The fuel analysis provisions of Subpart D have been reserved in the regulations promulgated herein. The Agency has initiated a study to obtain the necessary information on the variability of sulfur content in fuels, and the capability of fossil fuel fired steam generators to use fuel analysis and blending to prevent excess sulfur dioxide emissions. The results of this study will be used to determine whether fuel analysis should be allowed as a means of measuring excess emissions, and if allowed, what procedure should be required. It should be pointed out that this action does not affect facilities which use flue gas desulfurization as a means of complying with the sulfur dioxide standard; these facilities are still required to install continuous emission monitoring systems for sulfur dioxide. Facilities which use low sulfur fuel as a means of complying with the sulfur dioxide standard may use a continuous sulfur dioxide monitor or fuel analysis. For facilities that elect to use fuel analysis procedures, fuels are not required to be sampled or analyzed for preparation of reports of excess emissions until the Agency finalizes the procedures and requirements.

Three commentators recommended that carbon dioxide continuous monitoring systems be allowed as an alternative for oxygen monitoring for measurement of the amount of diluents in flue gases from steam generators. The Agency agrees with this recommendation and has included a provision which allows the use of carbon dioxide monitors. This provision allows the use of pollutant monitors that produce data on a wet basis without requiring additional equipment or procedures for correction of data to a dry basis. Where $CO_2$ or $O_2$ data are not collected on a consistent basis (wet or dry) with the pollutant data, or where oxygen is measured on a wet basis, alternative procedures to provide corrections for stack moisture and excess air must be approved by the Administrator. Similarly, use of a carbon dioxide continuous monitoring system downstream of a flue gas desulfurization system is not permitted without the Administrator's prior approval due to the potential for absorption of $CO_2$ within the control device. It should be noted that when any fuel is fired directly in the stack gases

for reheating, the F and F factors promulgated herein must be prorated based upon the total heat input of the fuels fired within the facility regardless of the locations of fuel firing. Therefore, any facility using a flue gas desulfurization system may be limited to dry basis monitoring instrumentation due to the restrictions on use of a $CO_2$ diluent monitor unless water vapor is also measured subject to the Administrator's approval.

Two commentators requested that an additional factor ($F_w$) be developed for use with oxygen continuous monitoring systems that measure flue gas diluents on a wet basis. A factor of this type was evaluated by EPA, but is not being promulgated with the regulations herein. The error in the accuracy of the factor may exceed ±5 percent without additional measurements to correct for variations in flue gas moisture content due to fluctuations in ambient humidity or fuel moisture content. However, EPA will approve installation of wet basis oxygen systems on a case-by-case basis if the owner or operator will proposed use of additional measurements and procedures to control the accuracy of the $F_w$ factor within acceptable limits. Applications for approval of such systems should include the frequency and type of additional measurements proposed and the resulting accuracy of the $F_w$ factor under the extremes of operating conditions anticipated

One commentator stated that the proposed requirements for recording heat input are superfluous because this information is not needed to convert monitoring data to units of the applicable standard. EPA has reevaluated this requirement and has determined that the conversion of excess emissions into units of the standards will be based upon the F factors and that measurement of the rates of fuel firing will not be needed except when combinations of fuels are fired. Accordingly, the regulations promulgated herein require such measurements only when multiple fuels are fired.

Thirteen commentators questioned the rationale for the proposed increased operating temperature of the Method 5 sampling train for fossil-fuel-fired steam generator particulate testing and the basis for raising rather than lowering the temperature. A brief discussion of the rationale behind this revision was provided in the preamble to the proposed regulations, and a more detailed discussion is provided here. Several factors are of primary importance in developing the data base for a standard of performance and in specifying the reference method for use in conducting a performance test, including:

a. The method used for data gathering to establish a standard must be the same as, or must have a known relationship to, the method subsequently established as the reference method.

b. The method should measure pollutant emissions indicative of the performance of the best systems of emission reduction. A method meeting this criterion will not necessarily measure emissions as they would exist after dilution and cooling to ambient temperature and pressure, as would occur upon release to the atmosphere. As such, an emission factor obtained through use of such a method would, for example, not necessarily be of use in an ambient dispersion model. This seeming inconsistency results from the fact that standards of performance are intended to result in installation of systems of emission reduction which are consistent with best demonstrated technology, considering cost. The Administrator, in establishing such standards, is required to identify best demonstrated technology and to develop standards which reflect such technology. In order for these standards to be meaningful, and for the required control technology to be predictable, the compliance methods must measure emissions which are indicative of the performance of such systems.

c. The method should include sufficient detail as needed to produce consistent and reliable test results.

EPA relies primarily upon Method 5 for gathering a consistent data base for particulate matter standards. Method 5 meets the above criteria by providing detailed sampling methodology and includes an out-of-stack filter to facilitate temperature control. The latter is needed to define particulate matter on a common basis since it is a function of temperature and is not an absolute quantity. If temperature is not controlled, and/or if the effect of temperature upon particulate formation is unknown, the effect on an emission control limitation for particulate matter may be variable and unpredictable.

Although selection of temperature can be varied from industry to industry, EPA specifies a nominal sampling temperature of 120° C for most source categories subject to standards of performance. Reasons for selection of 120° C include the following:

a. Filter temperature must be held above 100° C at sources where moist gas streams are present. Below 100° C, condensation can occur with resultant plugging of filters and possible gas/liquid reactions. A temperature of 120° C allows for expected temperature variation within the train, without dropping below 100° C.

b. Matter existing in particulate form at 120° C is indicative of the performance of the best particulate emission reduction systems for most industrial processes. These include systems of emission reduction that may involve not only the final control device, but also the process and stack gas conditioning systems.

c. Adherence to one established temperature (even though some variation may be needed for some source categories) allows comparison of emissions from source category to source category. This limited standardization used in the development of standards of performance is a benefit to equipment vendors and to source owners by providing a consistent basis for comparing test results and predicting control system performance. In comparison, in-stack filtration takes place at stack temperature, which usually is not constant from one source to the next. Since the temperature varies, in-stack filtration does not necessarily provide a consistent definition of particulate matter and does not allow for comparison of various systems of control. On these bases, Method 5 with a sampling filter temperature controlled at approximately 120° C was promulgated as the applicable test method for new fossil-fuel fired steam generators.

Subsequent to the promulgation of the standards of performance for steam generators, data became available indicating that certain combustion products which do not exist as particulate matter at the elevated temperatures existing in steam generator stacks may be collected by Method 5 at lower temperatures (below 160° C). Such material, existing in gaseous form at stack temperature, would not be controllable by emission reduction systems involving electrostatic precipitators (ESP). Consequently, measurement of such condensible matter would not be indicative of the control system performance. Studies conducted in the past two years have confirmed that such condensation can occur. At sources where fuels containing 0.3 to 0.85 percent sulfur were burned, the incremental increase in particulate matter concentration resulting from sampling at 120° C as compared to about 150° C was found to be variable, ranging from 0.001 to 0.008 gr/scf. The variability is not necessarily predictable, since total sulfur oxide concentration, boiler design and operation, and fuel additives each appear to have a potential effect. Based upon these data, it is concluded that the potential increase in particulate concentration at sources meeting the standard of performance for sulfur oxides is not a serious problem in comparison with the particulate standard which is approximately 0.07 gr/scf. Nevertheless, to insure that an unusual case will not occur where a high concentration of condensible matter, not controllable with an ESP, would prevent attainment of the particulate standard, the sampling temperature allowed at fossil-fuel fired steam boilers is being raised to 160° C. Since this temperature is attainable at new steam generator stacks, sampling at temperatures above 160° C would not yield results necessarily representative of the capabilities of the best systems of emission reduction.

In evaluating particulate sampling techniques and the effect of sampling temperature, particular attention has also been given to the possibility that $SO_2$ may react in the front half of the Method 5 train to form particulate matter. Based upon a series of comprehensive tests involving both source and controlled environments, EPA has developed data that show such reactions do not occur to a significant degree.

Several control agencies commented on the increase in sampling temperature and suggested that the need is for sampling at lower, not higher, temperatures. This is a relevant comment and is one which must be considered in terms of the basis upon which standards are established.

For existing boilers which are not subject to this standard, the existence of higher stack temperatures and/or the use of higher sulfur fuels may result in significant condensation and resultant high indicated particulate concentrations when sampling is conducted at 120° C. At one coal fired steam generator burning coal containing approximately three percent sulfur, EPA measurements at 120° C showed an increase of 0.05 gr/dscf over an average of seven runs compared to samples collected at approximately 150° C. It is believed that this increase resulted, in large part, if not totally, from $SO_3$ condensation which would occur also when the stack emissions are released into the atmosphere. Therefore, where standards are based upon emission reduction to achieve ambient air quality standards rather than on control technology (as is the case with the standards promulgated herein), a lower sampling temperature may be appropriate.

Seven commentators questioned the need for traversing for oxygen at 12 points within a duct during performance tests. This requirement, which is being revised to apply only when particulate sampling is performed (no more than 12 points are required) is included to insure that potential stratification resulting from air in-leakage will not adversely affect the accuracy of the particulate test.

Eight commentators stated that the requirement for continuous monitoring of nitrogen oxides should be deleted because only two air quality control regions have ambient levels of nitrogen dioxide that exceed the national ambient air quality standard for nitrogen dioxide. Standards of performance issued under section 111 of the Act are designed to require affected facilities to design and install the best systems of emission reduction (taking into account the cost of such reduction). Continuous emission monitoring systems are required to insure that the emission control systems are operated and maintained properly. Because of this, the Agency does not feel that it is appropriate to delete the continuous emission monitoring system requirements for nitrogen oxides; however, in evaluating these comments the Agency found that some situations may exist where the nitrogen oxides monitor is not necessary to insure proper operation and maintenance. The quantity of nitrogen oxides emitted from certain types of furnaces is considerably below the nitrogen oxides emission limitation. The low emission level is achieved through the design of the furnace and does not require specific operating procedures or maintenance on a continuous basis to keep the nitrogen oxides emissions below the applicable standard. Therefore, in this situation, a continuous emission monitoring system for nitrogen oxides is unnecessary. The regulations promulgated herein do not require continuous emission monitoring systems for nitrogen oxides on facilities whose emissions are 30 percent or more below the applicable standard.

Three commentators requested that owners or operators of steam generators be permitted to use $NO_x$ continuous monitoring systems capable of measuring only nitric oxide (NO) since the amount of nitrogen dioxide ($NO_2$) in the flue gases is comparatively small. The regulations proposed and those promulgated herein allow use of such systems or any system meeting all of the requirements of Performance Specification 2 of Appendix B. A system that measures only nitric oxide (NO) may meet these specifications including the relative accuracy requirement (relative to the reference method tests which measure NO + $NO_2$) without modification. However, in the interests of maximizing the accuracy of the system and creating conditions favorable to acceptance of such systems (the cost of systems measuring only NO is less), the owner or operator may determine the proportion of $NO_2$ relative to NO in the flue gases and use a factor to adjust the continuous monitoring system emission data (e.g. 1.03 × NO = $NO_x$) provided that the factor is applied not only to the performance evaluation data, but also applied consistently to all data generated by the continuous monitoring system thereafter. This procedure is limited to facilities that have less than 10 percent $NO_2$ (greater than 90 percent NO) in order to not seriously impair the accuracy of the system due to $NO_2$ to NO proportion fluctuations.

Section 60.45(g)(1) has been reserved for the future specification of the excess emissions for opacity that must be reported. On November 12, 1974 (39 FR 39872), the Administrator promulgated revisions to Subpart A, General Provisions, pertaining to the opacity provisions and to Reference Method 9, Visual Determination of the Opacity of Emissions from Stationary Sources. On April 22, 1975 (40 FR 17778), the Agency issued a notice soliciting comments on the opacity provisions and Reference Method 9. The Agency intends to evaluate the comments received and make any appropriate revision to the opacity provisions and Reference Method 9. In addition, the Agency is evaluating the opacity standards for fossil-fuel fired steam generators under § 60.42(a)(2) to determine if changes are needed because of the new Reference Method 9. The provisions on excess emissions for opacity will be issued after the Agency completes its evaluation of the opacity standard.

(3) Subpart G—Nitric Acid Plants. Two commentators questioned the long-term validity of the proposed conversion procedures for reducing data to units of the standard. They suggested that the conversion could be accomplished by monitoring the flue gas volumetric rate. EPA reevaluated the proposed procedures and found that monitoring the flue gas volume would be the most direct method and would also be an accurate method of converting monitoring data, but would require the installation of an additional continuous monitoring system. Although this option is available and would be acceptable subject to the Administrator's approval, EPA does not believe that the additional expense this method (monitoring volumetric rate) would entail is warranted. Since nitric acid plants, for economic and technical reasons, typically operate within a fairly narrow range of conversion efficiencies (90-96 percent) and tail gas diluents (2-5 percent oxygen), the flue gas volumetric rates are reasonably proportional to the acid production rate. The error that would be introduced into the data from the maximum variation of these parameters is approximately 15 percent and would usually be much less. It is expected that the tail gas oxygen concentration (an indication of the degree of tail gas dilution) will be rigidly controlled at facilities using catalytic converter control equipment. Accordingly, the proposed procedures for data conversion have been retained due to the small benefit that would result from requiring additional monitoring equipment. Other procedures may be approved by the Administrator under § 60.13(i).

(4) Subpart H—Sulfuric Acid Plants. Two commentators stated that the proposed procedure for conversion of monitoring data to units of the standard would result in large data reduction errors. EPA has evaluated more closely the operations of sulfuric acid plants and agrees that the proposed procedure is inadequate. The proposed conversion procedure assumes that the operating conditions of the affected facility will remain approximately the same as during the continuous monitoring system evaluation tests. For sulfuric acid plants this assumption is invalid. A sulfuric acid plant is typically designed to operate at a constant volumetric throughput (scfm). Acid production rates are altered by by-passing portions of the process air around the furnace or combustor to vary the concentration of the gas entering the converter. This procedure produces widely varying amounts of tail gas dilution relative to the production rate. Accordingly, EPA has developed new conversion procedures whereby the appropriate conversion factor is computed from an analysis of the $SO_2$ concentration entering the converter. Air injection plants must make additional corrections for the diluent air added. Measurement of the inlet $SO_2$ is a normal quality control procedure used by most sulfuric acid plants and does not represent an additional cost burden. The Reich test or other suitable procedures may be used.

(5) Subpart J—Petroleum Refineries. One commentator stated that the requirements for installation of continuous monitoring systems for oxygen and firebox temperature are unnecessary and that installation of a flame detection device would be superior for process control purposes. Also, EPA has obtained data which show no identifiable relationship between furnace temperature, percent oxygen in the flue gas, and carbon monoxide emissions when the facility is operated in compliance with the applicable standard. Since firebox temperature and oxygen measurements may not be preferred by source owners and operators for process control, and no

known method is available for translation of these measurements into quantitative reports of excess carbon monoxide emissions, this requirement appears to be of little use to the affected facilities or to EPA. Accordingly, requirements for installation of continuous monitoring systems for measurements of firebox temperature and oxygen are deleted from the regulations.

Since EPA has not yet developed performance specifications for carbon monoxide or hydrogen sulfide continuous monitoring systems, the type of equipment that may be installed by an owner or operator in compliance with EPA requirements is undefined. Without conducting performance evaluations of such equipment, little reliance can be placed upon the value of any data such systems would generate. Therefore, the sections of the regulation requiring these systems are being reserved until EPA proposes performance specifications applicable to $H_2S$ and CO monitoring systems. The provisions of § 60.105(a)(3) do not apply to an owner or operator electing to monitor $H_2S$. In that case, an $H_2S$ monitor should not be installed until specific $H_2S$ monitoring requirements are promulgated. At the time specifications are proposed, all owners or operators who have not entered into binding contractual obligations to purchase continuous monitoring equipment by [date of publication] will be required to install a carbon monoxide continuous monitoring system and a hydrogen sulfide continuous monitoring system (unless a sulfur dioxide continuous monitoring system has been installed) as applicable.

Section 60.105(a)(2), which specifies the excess emissions for capacity that must be reported, has been reserved for the same reasons discussed under fossil fuel-fired steam generators.

(6) Appendix B—Performance Specifications. A large number of comments were received in reference to specific technical and editorial changes needed in the specifications. Each of these comments has been reviewed and several changes in format and procedures have been made. These include adding alignment procedures for opacity monitors and more specific instructions for selecting a location for installing the monitoring equipment. Span requirements have been specified so that commercially produced equipment may be standardized where possible. The format of the specifications was simplified by redefining the requirements in terms of percent opacity, or oxygen, or carbon dioxide, or percent of span. The proposed requirements were in terms of percent of the emission standard which is less convenient or too vague since reference to the emission standards would have represented a range of pollutant concentrations depending upon the amount of diluents (i.e. excess air and water vapor) that are present in the effluent. In order to calibrate gaseous monitors in terms of a specific concentration, the requirements were revised to delete reference to the emission standards.

Four commentators noted that the reference methods used to evaluate continuous monitoring system performance may be less accurate than the systems themselves. Five other commentators questioned the need for 27 nitrogen oxides reference method tests. The accuracy specification for gaseous monitoring systems was specified at 20 percent, a value in excess of the actual accuracy of monitoring systems that provides tolerance for reference method inaccuracy. Commercially available monitoring equipment has been evaluated using these procedures and the combined errors (i.e. relative accuracy) in the reference methods and the monitoring systems have been shown not to exceed 20 percent after the data are averaged by the specified procedures.

Twenty commentators noted that the cost estimates contained in the proposal did not fully reflect installation costs, data reduction and recording costs, and the costs of evaluating the continuous monitoring systems. As a result, EPA reevaluated the cost analysis. For opacity monitoring alone, investment costs including data reduction equipment and performance tests are approximately $20,000, and annual operating costs are approximately $8,500. The same location on the stack used for conducting performance tests with Reference Method 5 (particulate) may be used by installing a separate set of ports for the monitoring system so that no additional expense for access is required. For power plants that are required to install opacity, nitrogen oxides, sulfur dioxide, and diluent ($O_2$ or $CO_2$) monitoring systems, the investment cost is approximately $55,000, and the operating cost is approximately $30,000. These are significant costs but are not unreasonable in comparison to the approximately seven million dollar investment cost for the smallest steam generation facility affected by these regulations.

*Effective date.* These regulations are promulgated under the authority of sections 111, 114 and 301(a) of the Clean Air Act as amended [42 U.S.C. 1857c-6, 1857c-9, and 1857g(a)] and become effective October 6, 1975.

Dated: September 23, 1975.

JOHN QUARLES,
*Acting Administrator.*

40 CFR Part 60 is amended by revising Subparts A, D, F, G, H, I, J, L, M, and O, and adding Appendix B as follows:

1. The table of sections is amended by revising Subpart A and adding Appendix B as follows:

**Subpart A—General Provisions**

* * * * *

60.13 Monitoring requirements

* * * * *

**APPENDIX B—PERFORMANCE SPECIFICATIONS**

Performance Specification 1—Performance specifications and specification test procedures for transmissometer systems for continuous measurement of the opacity of stack emissions

Performance Specification 2—Performance specifications and specification test procedures for monitors of $SO_2$ and $NO_x$ from stationary sources.

Performance Specification 3—Performance specifications and specification test procedures for monitors of $CO_2$ and $O_2$ from stationary sources.

* * * * *

**Subpart A—General Provisions**

Section 60.2 is amended by revising paragraph (r) and by adding paragraphs (x), (y), and (z) as follows:

**§ 60.2 Definitions.**

* * * * *

(r) "One-hour period" means any 60 minute period commencing on the hour.

* * * * *

(x) "Six-minute period" means any one of the 10 equal parts of a one-hour period.

(y) "Continuous monitoring system" means the total equipment, required under the emission monitoring sections in applicable subparts, used to sample and condition (if applicable), to analyze, and to provide a permanent record of emissions or process parameters.

(z) "Monitoring device" means the total equipment, required under the monitoring of operations sections in applicable subparts, used to measure and record (if applicable) process parameters.

3. In § 60.7, paragraph (a)(5) is added and paragraphs (b), (c), and (d) are revised. The added and revised provisions read as follows:

**§ 60.7 Notification and record keeping.**

(a) * * *

(5) A notification of the date upon which demonstration of the continuous monitoring system performance commences in accordance with § 60.13(c) Notification shall be postmarked not less than 30 days prior to such date.

(b) Any owner or operator subject to the provisions of this part shall maintain records of the occurrence and duration of any startup, shutdown, or malfunction in the operation of an affected facility; any malfunction of the air pollution control equipment; or any periods during which a continuous monitoring system or monitoring device is inoperative.

(c) Each owner or operator required to install a continuous monitoring system shall submit a written report of excess emissions (as defined in applicable subparts) to the Administrator for every calendar quarter. All quarterly reports shall be postmarked by the 30th day following the end of each calendar quarter and shall include the following information:

(1) The magnitude of excess emissions computed in accordance with § 60.13(h), any conversion factor(s) used, and the date and time of commencement and completion of each time period of excess emissions.

(2) Specific identification of each period of excess emissions that occurs during startups, shutdowns, and malfunctions of the affected facility. The nature and cause of any malfunction (if known), the corrective action taken or preventative measures adopted.

(3) The date and time identifying each period during which the continuous monitoring system was inoperative except for zero and span checks and the nature of the system repairs or adjustments.

(4) When no excess emissions have occurred or the continuous monitoring system(s) have not been inoperative, repaired, or adjusted, such information shall be stated in the report.

(d) Any owner or operator subject to the provisions of this part shall maintain a file of all measurements, including continuous monitoring system, monitoring device, and performance testing measurements; all continuous monitoring system performance evaluations; all continuous monitoring system or monitoring device calibration checks; adjustments and maintenance performed on these systems or devices; and all other information required by this part recorded in a permanent form suitable for inspection. The file shall be retained for at least two years following the date of such measurements, maintenance, reports, and records.

4. A new § 60.13 is added as follows:

**§ 60.13 Monitoring requirements.**

(a) Unless otherwise approved by the Administrator or specified in applicable subparts, the requirements of this section shall apply to all continuous monitoring systems required under applicable subparts.

(b) All continuous monitoring systems and monitoring devices shall be installed and operational prior to conducting performance tests under § 60.8. Verification of operational status shall, as a minimum, consist of the following:

(1) For continuous monitoring systems referenced in paragraph (c)(1) of this section, completion of the conditioning period specified by applicable requirements in Appendix B.

(2) For continuous monitoring systems referenced in paragraph (c)(2) of this section, completion of seven days of operation.

(3) For monitoring devices referenced in applicable subparts, completion of the manufacturer's written requirements or recommendations for checking the operation or calibration of the device.

(c) During any performance tests required under § 60.8 or within 30 days thereafter and at such other times as may be required by the Administrator under section 114 of the Act, the owner or operator of any affected facility shall conduct continuous monitoring system performance evaluations and furnish the Administrator within 60 days thereof two or, upon request, more copies of a written report of the results of such tests. These continuous monitoring system performance evaluations shall be conducted in accordance with the following specifications and procedures:

(1) Continuous monitoring systems listed within this paragraph except as provided in paragraph (c)(2) of this section shall be evaluated in accordance with the requirements and procedures contained in the applicable performance specification of Appendix B as follows:

(i) Continuous monitoring systems for measuring opacity of emissions shall comply with Performance Specification 1.

(ii) Continuous monitoring systems for measuring nitrogen oxides emissions shall comply with Performance Specification 2.

(iii) Continuous monitoring systems for measuring sulfur dioxide emissions shall comply with Performance Specification 2.

(iv) Continuous monitoring systems for measuring the oxygen content or carbon dioxide content of effluent gases shall comply with Performance Specification 3.

(2) An owner or operator who, prior to September 11, 1974, entered into a binding contractual obligation to purchase specific continuous monitoring system components except as referenced by paragraph (c)(2)(iii) of this section shall comply with the following requirements:

(i) Continuous monitoring systems for measuring opacity of emissions shall be capable of measuring emission levels within ±20 percent with a confidence level of 95 percent. The Calibration Error Test and associated calculation procedures set forth in Performance Specification 1 of Appendix B shall be used for demonstrating compliance with this specification.

(ii) Continuous monitoring systems for measurement of nitrogen oxides or sulfur dioxide shall be capable of measuring emission levels within ±20 percent with a confidence level of 95 percent. The Calibration Error Test, the Field Test for Accuracy (Relative), and associated operating and calculation procedures set forth in Performance Specification 2 of Appendix B shall be used for demonstrating compliance with this specification.

(iii) Owners or operators of all continuous monitoring systems installed on an affected facility prior to [date of promulgation] are not required to conduct tests under paragraphs (c)(2)(i) and/or (ii) of this section unless requested by the Administrator.

(3) All continuous monitoring systems referenced by paragraph (c)(2) of this section shall be upgraded or replaced (if necessary) with new continuous monitoring systems, and such improved systems shall be demonstrated to comply with applicable performance specifications under paragraph (c)(1) of this section by September 11, 1979.

(d) Owners or operators of all continuous monitoring systems installed in accordance with the provisions of this part shall check the zero and span drift at least once daily in accordance with the method prescribed by the manufacturer of such systems unless the manufacturer recommends adjustments at shorter intervals, in which case such recommendations shall be followed. The zero and span shall, as a minimum, be adjusted whenever the 24-hour zero drift or 24-hour calibration drift limits of the applicable performance specifications in Appendix B are exceeded. For continuous monitoring systems measuring opacity of emissions, the optical surfaces exposed to the effluent gases shall be cleaned prior to performing the zero or span drift adjustments except that for systems using automatic zero adjustments, the optical surfaces shall be cleaned when the cumulative automatic zero compensation exceeds four percent opacity. Unless otherwise approved by the Administrator, the following procedures, as applicable, shall be followed:

(1) For extractive continuous monitoring systems measuring gases, minimum procedures shall include introducing applicable zero and span gas mixtures into the measurement system as near the probe as is practical. Span and zero gases certified by their manufacturer to be traceable to National Bureau of Standards reference gases shall be used whenever these reference gases are available. The span and zero gas mixtures shall be the same composition as specified in Appendix B of this part. Every six months from date of manufacture, span and zero gases shall be reanalyzed by conducting triplicate analyses with Reference Methods 6 for $SO_2$, 7 for $NO_x$, and 3 for $O_2$ and $CO_2$, respectively. The gases may be analyzed at less frequent intervals if longer shelf lives are guaranteed by the manufacturer.

(2) For non-extractive continuous monitoring systems measuring gases, minimum procedures shall include upscale check(s) using a certified calibration gas cell or test cell which is functionally equivalent to a known gas concentration. The zero check may be performed by computing the zero value from upscale measurements or by mechanically producing a zero condition.

(3) For continuous monitoring systems measuring opacity of emissions, minimum procedures shall include a method for producing a simulated zero opacity condition and an upscale (span) opacity condition using a certified neutral density filter or other related technique to produce a known obscuration of the light beam. Such procedures shall provide a system check of the analyzer internal optical surfaces and all electronic circuitry including the lamp and photodetector assembly.

(e) Except for system breakdowns, repairs, calibration checks, and zero and span adjustments required under paragraph (d) of this section, all continuous monitoring systems shall be in continuous operation and shall meet minimum frequency of operation requirements as follows:

(1) All continuous monitoring systems referenced by paragraphs (c)(1) and (2) of this section for measuring opacity of emissions shall complete a minimum of one cycle of operation (sampling, analyzing, and data recording) for each successive 10-second period.

(2) All continuous monitoring systems referenced by paragraph (c)(1) of this section for measuring oxides of nitrogen, sulfur dioxide, carbon dioxide, or oxygen shall complete a minimum of one cycle of operation (sampling, analyzing, and data recording) for each successive 15-minute period.

(3) All continuous monitoring systems referenced by paragraph (c)(2) of this section, except opacity, shall complete a minimum of one cycle of operation (sampling, analyzing, and data recording) for each successive one-hour period.

(f) All continuous monitoring systems or monitoring devices shall be installed such that representative measurements of emissions or process parameters from the affected facility are obtained. Additional procedures for location of continuous monitoring systems contained in the applicable Performance Specifications of Appendix B of this part shall be used.

(g) When the effluents from a single affected facility or two or more affected facilities subject to the same emission standards are combined before being released to the atmosphere, the owner or operator may install applicable continuous monitoring systems on each effluent or on the combined effluent. When the affected facilities are not subject to the same emission standards, separate continuous monitoring systems shall be installed on each effluent. When the effluent from one affected facility is released to the atmosphere through more than one point, the owner or operator shall install applicable continuous monitoring systems on each separate effluent unless the installation of fewer systems is approved by the Administrator.

(h) Owners or operators of all continuous monitoring systems for measurement of opacity shall reduce all data to six-minute averages and for systems other than opacity to one-hour averages for time periods under § 60.2 (x) and (r) respectively. Six-minute opacity averages shall be calculated from 24 or more data points equally spaced over each six-minute period. For systems other than opacity, one-hour averages shall be computed from four or more data points equally spaced over each one-hour period. Data recorded during periods of system breakdowns, repairs, calibration checks, and zero and span adjustments shall not be included in the data averages computed under this paragraph. An arithmetic or integrated average of all data may be used. The data output of all continuous monitoring systems may be recorded in reduced or nonreduced form (e.g. ppm pollutant and percent $O_2$ or lb million Btu of pollutant). All excess emissions shall be converted into units of the standard using the applicable conversion procedures specified in subparts. After conversion into units of the standard, the data may be rounded to the same number of significant digits used in subparts to specify the applicable standard (e.g. rounded to the nearest one percent opacity).

(i) Upon written application by an owner or operator, the Administrator may approve alternatives to any monitoring procedures or requirements of this part including, but not limited to the following:

(i) Alternative monitoring requirements when installation of a continuous monitoring system or monitoring device specified by this part would not provide accurate measurements due to liquid water or other interferences caused by substances with the effluent gases.

(ii) Alternative monitoring requirements when the affected facility is infrequently operated.

(iii) Alternative monitoring requirements to accommodate continuous monitoring systems that require additional measurements to correct for stack moisture conditions.

(iv) Alternative locations for installing continuous monitoring systems or monitoring devices when the owner or operator can demonstrate that installation at alternate locations will enable accurate and representative measurements.

(v) Alternative methods of converting pollutant concentration measurements to units of the standards.

(vi) Alternative procedures for performing daily checks of zero and span drift that do not involve use of span gases or test cells.

(vii) Alternatives to the A.S.T.M. test methods or sampling procedures specified by any subpart.

(viii) Alternative continuous monitoring systems that do not meet the design or performance requirements in Performance Specification 1, Appendix B, but adequately demonstrate a definite and consistent relationship between its measurements and the measurements of opacity by a system complying with the requirements in Performance Specification 1. The Administrator may require that such demonstration be performed for each affected facility.

(ix) Alternative monitoring requirements when the effluent from a single affected facility or the combined effluent from two or more affected facilities are released to the atmosphere through more than one point.

## Subpart D—Standards of Performance for Fossil Fuel-Fired Steam Generators

### § 60.42 [Amended]

5. Paragraph (a)(2) of § 60.42 is amended by deleting the second sentence.

6. Section 60.45 is amended by revising paragraphs (a), (b), (c), (d), (e), (f), and (g) as follows:

### § 60.45 Emission and fuel monitoring.

(a) A continuous monitoring system for measuring the opacity of emissions, except where gaseous fuel is the only fuel burned, shall be installed, calibrated, maintained, and operated by the owner or operator. The continuous monitoring system shall be spanned at 80 or 90 or 100 percent opacity.

(b) A continuous monitoring system for measuring sulfur dioxide emissions, shall be installed, calibrated, maintained and operated by the owner or operator except where gaseous fuel is the only fuel burned or where low sulfur fuels are used to achieve compliance with the standard under § 60.43 and fuel analyses under paragraph (b)(2) of this section are conducted. The following procedures shall be used for monitoring sulfur dioxide emissions:

(1) For affected facilities which use continuous monitoring systems, Reference Method 6 shall be used for conducting monitoring system performance evaluations under § 60.13(c). The pollutant gas used to prepare calibration gas mixtures under paragraph 2.1, Performance Specification 2 and for calibration checks under § 60.13(d) to this part, shall be sulfur dioxide ($SO_2$). The span value for the continuous monitoring system shall be determined as follows:

(i) For affected facilities firing liquid fossil fuel the span value shall be 1000 ppm sulfur dioxide.

(ii) For affected facilities firing solid fossil fuel the span value shall be 1500 ppm sulfur dioxide.

(iii) For affected facilities firing fossil fuels in any combination, the span value shall be determined by computation in accordance with the following formula and rounding to the nearest 500 ppm sulfur dioxide:

$$1000y + 1500z$$

where:

y = the fraction of total heat input derived from liquid fossil fuel, and

z = the fraction of total heat input derived from solid fossil fuel.

(iv) For affected facilities which fire both fossil fuels and nonfossil fuels, the span value shall be subject to the Administrator's approval.

(2) [Reserved]

(3) For affected facilities using flue gas desulfurization systems to achieve compliance with sulfur dioxide standards under § 60.43, the continuous monitoring system for measuring sulfur dioxide emissions shall be located downstream of the desulfurization system and in accordance with requirements in Performance Specification 2 of Appendix B and the following:

(i) Owners or operators shall install $CO_2$ continuous monitoring systems, if selected under paragraph (d) of this section, at a location upstream of the desulfurization system. This option may be used only if the owner or operator can demonstrate that air is not added to the flue gas between the $CO_2$ continuous monitoring system and the $SO_2$ continuous monitoring system and each system measures the $CO_2$ and $SO_2$ on a dry basis.

(ii) Owners or operators who install $O_2$ continuous monitoring systems under paragraph (d) of this section shall select a location downstream of the desulfurization system and all measurements shall be made on a dry basis.

(iii) If fuel of a different type than is used in the boiler is fired directly into the flue gas for any purpose (e.g., reheating) the F or Fc factors used shall be prorated under paragraph (f)(6) of this section with consideration given to the fraction of total heat input supplied by the additional fuel. The pollutant, opacity, $CO_2$, or $O_2$ continuous monitoring system(s) shall be installed downstream of any location at which fuel is fired directly into the flue gas.

(c) A continuous monitoring system for the measurement of nitrogen oxides emissions shall be installed, calibrated, maintained, and operated by the owner

or operator except for any affected facility demonstrated during performance tests under § 60.8 to emit nitrogen oxides pollutants at levels 30 percent or more below applicable standards under § 60.44 of this part. The following procedures shall be used for determining the span and for calibrating nitrogen oxides continuous monitoring systems:

(1) The span value shall be determined as follows:

(i) For affected facilities firing gaseous fossil fuel the span value shall be 500 ppm nitrogen oxides.

(ii) For affected facilities firing liquid fossil fuel the span value shall be 500 ppm nitrogen oxides.

(iii) For affected facilities firing solid fossil fuel the span value shall be 1000 ppm nitrogen oxides.

(iv) For affected facilities firing fossil fuels in any combination, the span value shall be determined by computation in accordance with the following formula and rounding to the nearest 500 ppm nitrogen oxides:

$$500\,(x+y)+1000z$$

where:

x = the fraction of total heat input derived from gaseous fossil fuel,
y = the fraction of total heat input derived from liquid fossil fuel, and
z = the fraction of total heat input derived from solid fossil fuel.

(v) For affected facilities which fire both fossil fuels and nonfossil fuels, the span value shall be subject to the Administrator's approval.

(2) The pollutant gas used to prepare calibration gas mixtures under paragraph 2.1, Performance Specification 2 and for calibration checks under § 60.13 (d) to this part, shall be nitric oxide (NO). Reference Method 7 shall be used for conducting monitoring system performance evaluations under § 60.13(c).

(d) A continuous monitoring system for measuring either oxygen or carbon dioxide in the flue gases shall be installed, calibrated, maintained, and operated by the owner or operator.

(e) An owner or operator required to install continuous monitoring systems under paragraphs (b) and (c) of this section shall for each pollutant monitored use the applicable conversion procedure for the purpose of converting continuous monitoring data into units of the applicable standards (g/million cal, lb/million Btu) as follows:

(1) When the owner or operator elects under paragraph (d) of this section to measure oxygen in the flue gases, the measurement of the pollutant concentration and oxygen concentration shall each be on a dry basis and the following conversion procedure shall be used:

$$E=CF\left(\frac{20.9}{20.9-\%O_2}\right)$$

where:

E, C, F and $\%O_2$ are determined under paragraph (f) of this section.

(2) When the owner or operator elects under paragraph (d) of this section to measure carbon dioxide in the flue gases, the measurement of the pollutant concentration and the carbon dioxide concentration shall be on a consistent basis (wet or dry) and the following conversion procedure shall be used:

$$E=CF_c\left[\frac{100}{\%CO_2}\right]$$

where:

E, C, $F_c$, and $\%CO_2$ are determined under paragraph (f) of this section.

(f) The values used in the equations under paragraphs (e) (1) and (2) of this section are derived as follows:

(1) E = pollutant emission, g/million cal (lb/million Btu).

(2) C = pollutant concentration, g/dscm (lb/dscf), determined by multiplying the average concentration (ppm) for each one-hour priod by $4.15\times10^{-5}$ M g/dscm per ppm ($2.59\times10^{-9}$ M lb/dscf per ppm) where M = pollutant molecular weight, g/g-mole (lb/lb-mole). M = 64.07 for sulfur dioxide and 46.01 for nitrogen oxides.

(3) $\%O_2$, $\%CO_2$ = oxygen or carbon dioxide volume (expressed as percent), determined with equipment specified under paragraph (d) of this section.

(4) F, $F_c$ = a factor representing a ratio of the volume of dry flue gases generated to the calorific value of the fuel combusted (F), and a factor representing a ratio of the volume of carbon dioxide generated to the calorific value of of the fuel combusted ($F_c$), respectively. Values of F and $F_c$ are given as follows:

$$F=\left[\frac{227.0\%H+95.7\%C+35.4\%S+8.6\%N-28.5\%O}{GCV}\right]\text{ (metric units)}$$

$$F=\frac{10^6\,[6.34\%H+1.53\%C+0.57\%S+0.14\%N-0.46\%O]}{GCV}\text{ (English units)}$$

$$F_c=\frac{20.0\%C}{GCV}\text{ (metric units)}$$

$$F_c=\frac{321\times10^3\%C}{GCV}\text{ (English units)}$$

(i) H, C, S, N, and O are content by weight of hydrogen, carbon, sulfur, nitrogen, and oxygen (expressed as percent), respectively, as determined on the same basis as GCV by ultimate analysis of the fuel fired, using A.S.T.M. method D3178–74 or D3176 (solid fuels), or computed from results using A.S.T.M. methods D1137–53(70), D1945–64(73), or D1946–67(72) (gaseous fuels) as applicable.

(ii) GCV is the gross calorific value (cal/g, Btu/lb) of the fuel combusted, determined by the A.S.T.M. test methods D2015–66(72) for solid fuels and D1826–64(70) for gaseous fuels as applicable.

(6) For affected facilities firing combinations of fossil fuels, the F or $F_c$ factors determined by paragraphs (f) (4) or (5) of this section shall be prorated in accordance with the applicable formula as follows:

(i) $$F=xF_1+yF_2+zF_3$$

where:

x, y, z = the fraction of total heat input derived from gaseous, liquid, and solid fuel, respectively.

$F_1$, $F_2$, $F_3$ = the value of F for gaseous, liquid, and solid fossil fuels respectively under paragraphs (f) (4) or (5) of this section.

(i) For anthracite coal as classified according to A.S.T.M. D388–66, F = 1.139 dscm/million cal (10140 dscf/million Btu) and $F_c$ = 0.222 scm $CO_2$/million cal (1980 scf $CO_2$/million Btu).

(ii) For sub-bituminous and bituminous coal as classified according to ASTM D388–66, F = 1.103 dscm/million cal (9820 dscf/million Btu) and F = 0.203 scm CO million cal (1810 scf $CO_2$/million Btu).

(iii) For liquid fossil fuels including crude, residual, and distillate oils, F = 1.036 dscm/million cal (9220 dscf/million Btu) and $F_c$ = 0.161 scm $CO_2$/million cal (1430 scf $CO_2$/million Btu).

(iv) For gaseous fossil fuels, F = 0.982 dscm/million cal (8740 dscf/million Btu). For natural gas, propane, and butane fuels, $F_c$ = 0.117 scm $CO_2$/million cal (1040 scf $CO_2$/million Btu) for natural gas, 0.135 scm $CO_2$/million cal (1200 scf $CO_2$/million Btu) for propane, and 0.142 scm $CO_2$/million cal (1260 scf $CO_2$/million Btu) for butane.

(5) The owner or operator may use the following equation to determine an F factor (dscm/million cal, or dscf/million Btu) on a dry basis (if it is desired to calculate F on a wet basis, consult with the Administrator) or $F_c$ factor (scm $CO_2$/million cal, or scf $CO_2$/million Btu) on either basis in lieu of the F or $F_c$ factors specified in paragraph (f)(4) of this section:

(ii) $$F_c=\sum_{i=1}^{n}X_i(F_c)_i$$

where:

$x_i$ = the fraction of total heat input derived from each type fuel (e.g., natural gas, butane, crude, bituminous coal, etc.).

$(F_c)_i$ = the applicable $F_c$ factor for each fuel type determined in accordance with paragraphs (f)(4) and (5) of this section.

(iii) For affected facilities which fire both fossil fuels and nonfossil fuels, the F or $F_c$ value shall be subject to the Administrator's approval.

(g) For the purpose of reports required under § 60.7(c), periods of excess emissions that shall be reported are defined as follows:

(1) [Reserved]

(2) Sulfur dioxide. Excess emissions for affected facilities are defined as

(i) Any three-hour period during which the average emissions (arithmetic average of three contiguous one-hour periods) of sulfur dioxide as measured by a continuous monitoring system exceed the applicable standard under § 60.43

(ii) [Reserved]

(3) Nitrogen oxides. Excess emissions for affected facilities using a continuous monitoring system for measuring nitro-

gen oxides are defined as any three-hour period during which the average emissions (arithmetic average of three contiguous one-hour periods) exceed the applicable standards under § 60.44.

7. Section 60.46 is revised to read as follows:

**§ 60.46 Test methods and procedures.**

(a) The reference methods in Appendix A of this part, except as provided in § 60.8(b), shall be used to determine compliance with the standards as prescribed in §§ 60.42, 60.43, and 60.44 as follows:

(1) Method 1 for selection of sampling site and sample traverses.

(2) Method 3 for gas analysis to be used when applying Reference Methods 5, 6 and 7.

(3) Method 5 for concentration of particulate matter and the associated moisture content.

(4) Method 6 for concentration of $SO_2$, and

(5) Method 7 for concentration of $NO_x$.

(b) For Method 5, Method 1 shall be used to select the sampling site and the number of traverse sampling points. The sampling time for each run shall be at least 60 minutes and the minimum sampling volume shall be 0.85 dscm (30 dscf) except that smaller sampling times or volumes, when necessitated by process variables or other factors, may be approved by the Administrator. The probe and filter holder heating systems in the sampling train shall be set to provide a gas temperature no greater than 160° C (320° F).

(c) For Methods 6 and 7, the sampling site shall be the same as that selected for Method 5. The sampling point in the duct shall be at the centroid of the cross section or at a point no closer to the walls than 1 m (3.28 ft). For Method 6, the sample shall be extracted at a rate proportional to the gas velocity at the sampling point.

(d) For Method 6, the minimum sampling time shall be 20 minutes and the minimum sampling volume 0.02 dscm (0.71 dscf) for each sample. The arithmetic mean of two samples shall constitute one run. Samples shall be taken at approximately 30-minute intervals.

(e) For Method 7, each run shall consist of at least four grab samples taken at approximately 15-minute intervals. The arithmetic mean of the samples shall constitute the run value.

(f) For each run using the methods specified by paragraphs (a)(3), (4), and (5) of this section, the emissions expressed in g/million cal (lb/million Btu) shall be determined by the following procedure:

$$E = CF\left(\frac{20.9}{20.9 - \%O_2}\right)$$

where:

(1) E = pollutant emission g/million cal (lb million Btu)

(2) C = pollutant concentration, g/dscm (lb dscf), determined by Methods 5, 6, or 7.

(3) $\%O_2$ = oxygen content by volume (expressed as percent), dry basis. Percent oxygen shall be determined by using the integrated or grab sampling and analysis procedures of Method 3 as applicable. The sample shall be obtained as follows:

(i) For determination of sulfur dioxide and nitrogen oxides emissions, the oxygen sample shall be obtained simultaneously at the same point in the duct as used to obtain the samples for Methods 6 and 7 determinations, respectively [§ 60.46(c)]. For Method 7, the oxygen sample shall be obtained using the grab sampling and analysis procedures of Method 3.

(ii) For determination of particulate emissions, the oxygen sample shall be obtained simultaneously by traversing the duct at the same sampling location used for each run of Method 5 under paragraph (b) of this section. Method 1 shall be used for selection of the number of traverse points except that no more than 12 sample points are required.

(4) F = a factor as determined in paragraphs (f)(4), (5) or (6) of § 60.45.

(g) When combinations of fossil fuels are fired, the heat input, expressed in cal/hr (Btu/hr), shall be determined during each testing period by multiplying the gross calorific value of each fuel fired by the rate of each fuel burned. Gross calorific value shall be determined in accordance with A.S.T.M. methods D2015-66(72) (solid fuels), D240-64(73) (liquid fuels), or D1826-64(70) (gaseous fuels) as applicable. The rate of fuels burned during each testing period shall be determined by suitable methods and shall be confirmed by a material balance over the steam generation system.

**Subpart F—Standards of Performance for Portland Cement Plants**

**§ 60.62 [Amended]**

8. Section 60.62 is amended by deleting paragraph (d).

**Subpart G—Standards of Performance for Nitric Acid Plants**

**§ 60.72 [Amended]**

9. Paragraph (a)(2) of § 60.72 is amended by deleting the second sentence.

10. Section 60.73 is amended by revising paragraphs (a), (b), (c), and (e) to read as follows:

**§ 60.73 Emission monitoring.**

(a) A continuous monitoring system for the measurement of nitrogen oxides shall be installed, calibrated, maintained, and operated by the owner or operator. The pollutant gas used to prepare calibration gas mixtures under paragraph 2.1, Performance Specification 2 and for calibration checks under § 60.13(d) to this part, shall be nitrogen dioxide ($NO_2$). The span shall be set at 500 ppm of nitrogen dioxide. Reference Method 7 shall be used for conducting monitoring system performance evaluations under § 60.13(c).

(b) The owner or operator shall establish a conversion factor for the purpose of converting monitoring data into units of the applicable standard (kg/metric ton, lb/short ton). The conversion factor shall be established by measuring emissions with the continuous monitoring system concurrent with measuring emissions with the applicable reference method tests. Using only that portion of the continuous monitoring emission data that represents emission measurements concurrent with the reference method test periods, the conversion factor shall be determined by dividing the reference method test data averages by the monitoring data averages to obtain a ratio expressed in units of the applicable standard to units of the monitoring data, i.e., kg/metric ton per ppm (lb/short ton per ppm). The conversion factor shall be reestablished during any performance test under § 60.8 or any continuous monitoring system performance evaluation under § 60.13(c).

(c) The owner or operator shall record the daily production rate and hours of operation.

* * * * *

(e) For the purpose of reports required under § 60.7(c), periods of excess emissions that shall be reported are defined as any three-hour period during which the average nitrogen oxides emissions (arithmetic average of three contiguous one-hour periods) as measured by a continuous monitoring system exceed the standard under § 60.72(a).

**Subpart H—Standards of Performance for Sulfuric Acid Plants**

**§ 60.83 [Amended]**

11. Paragraph (a)(2) of § 60.83 is amended by deleting the second sentence.

12. Section 60.84 is amended by revising paragraphs (a), (b), (c), and (e) to read as follows:

**§ 60.84 Emission monitoring.**

(a) A continuous monitoring system for the measurement of sulfur dioxide shall be installed, calibrated, maintained, and operated by the owner or operator. The pollutant gas used to prepare calibration gas mixtures under paragraph 2.1, Performance Specification 2 and for calibration checks under § 60.13(d) to this part, shall be sulfur dioxide ($SO_2$). Reference Method 8 shall be used for conducting monitoring system performance evaluations under § 60.13(c) except that only the sulfur dioxide portion of the Method 8 results shall be used. The span shall be set at 1000 ppm of sulfur dioxide.

(b) The owner or operator shall establish a conversion factor for the purpose of converting monitoring data into units of the applicable standard (kg/metric ton, lb/short ton). The conversion factor shall be determined, as a minimum, three times daily by measuring the concentration of sulfur dioxide entering the converter using suitable methods (e.g., the Reich test, National Air Pollution Control Administration Publication No. 999-AP-13 and calculating the appropriate conversion factor for each eight-hour period as follows:

$$CF = k\left[\frac{1.000 - 0.015r}{r - s}\right]$$

where:

CF = conversion factor (kg/metric ton per ppm, lb/short ton per ppm).

k = constant derived from material balance. For determining CF in metric units, k=0.0653. For determining CF in English units, k=0.1306.

r = percentage of sulfur dioxide by volume entering the gas converter. Appropriate corrections must be made for air injection plants subject to the Administrator's approval.

s = percentage of sulfur dioxide by volume in the emissions to the atmosphere determined by the continuous monitoring system required under paragraph (a) of this section.

(c) The owner or operator shall record all conversion factors and values under paragraph (b) of this section from which they were computed (i.e., CF, r, and s).

* * * * *

(e) For the purpose of reports under § 60.7(c), periods of excess emissions shall be all three-hour periods (or the arithmetic average of three consecutive one-hour periods) during which the integrated average sulfur dioxide emissions exceed the applicable standards under § 60.82.

## Subpart I—Standards of Performance for Asphalt Concrete Plants

### § 60.92 [Amended]

13. Paragraph (a)(2) of § 60.92 is amended by deleting the second sentence.

## Subpart J—Standards of Performance for Petroleum Refineries

### § 60.102 [Amended]

14. Paragraph (a)(2) of § 60.102 is amended by deleting the second sentence.

15. Section 60.105 is amended by revising paragraphs (a), (b), and (e) to read as follows:

### § 60.105 Emission monitoring.

(a) Continuous monitoring systems shall be installed, calibrated, maintained, and operated by the owner or operator as follows:

(1) A continuous monitoring system for the measurement of the opacity of emissions discharged into the atmosphere from the fluid catalytic cracking unit catalyst regenerator. The continuous monitoring system shall be spanned at 60, 70, or 80 percent opacity.

(2) [Reserved]

(3) A continuous monitoring system for the measurement of sulfur dioxide in the gases discharged into the atmosphere from the combustion of fuel gases (except where a continuous monitoring system for the measurement of hydrogen sulfide is installed under paragraph (a)(4) of this section). The pollutant gas used to prepare calibration gas mixtures under paragraph 2.1, Performance Specification 2 and for calibration checks under § 60.13(d) to this part, shall be sulfur dioxide ($SO_2$). The span shall be set at 100 ppm. For conducting monitoring system performance evaluations under § 60.13(c), Reference Method 6 shall be used.

(4) [Reserved]

(b) [Reserved]

* * * * *

(e) For the purpose of reports under § 60.7(c), periods of excess emissions that shall be reported are defined as follows:

(1) [Reserved]

(2) [Reserved]

(3) [Reserved]

(4) Any six-hour period during which the average emissions (arithmetic average of six contiguous one-hour periods) of sulfur dioxide as measured by a continuous monitoring system exceed the standard under § 60.104.

## Subpart L—Standards of Performance for Secondary Lead Smelters

### § 60.122 [Amended]

16. Section 60.122 is amended by deleting paragraph (c).

* * * * *

## Subpart M—Standards of Performance for Secondary Brass and Bronze Ingot Production Plants

### § 60.132 [Amended]

17. Section 60.132 is amended by deleting paragraph (c).

* * * * *

## Subpart O—Standards of Performance for Sewage Treatment Plants

### § 60.152 [Amended]

18. Paragraph (a)(2) of § 60.152 is amended by deleting the second sentence.

* * * * *

19. Part 60 is amended by adding Appendix B as follows:

### Appendix B—Performance Specifications

Performance Specification 1—Performance specifications and specification test procedures for transmissometer systems for continuous monitoring system exceed the emissions

1. Principle and Applicability.

1.1 Principle. The opacity of particulate matter in stack emissions is measured by a continuously operating emission measurement system. These systems are based upon the principle of transmissometry which is a direct measurement of the attenuation of visible radiation (opacity) by particulate matter in a stack effluent. Light having specific spectral characteristics is projected from a lamp across the stack of a pollutant source to a light sensor. The light is attenuated due to absorption and scatter by the particulate matter in the effluent. The percentage of visible light attenuated is defined as the opacity of the emission. Transparent stack emissions that do not attenuate light will have a transmittance of 100 or an opacity of 0. Opaque stack emissions that attenuate all of the visible light will have a transmittance of 0 or an opacity of 100 percent. The transmissometer is evaluated by use of neutral density filters to determine the precision of the continuous monitoring system. Tests of the system are performed to determine zero drift, calibration drift, and response time characteristics of the system.

1.2 Applicability. This performance specification is applicable to the continuous monitoring systems specified in the subparts for measuring opacity of emissions. Specifications for continuous measurement of visible emissions are given in terms of design, performance, and installation parameters. These specifications contain test procedures, installation requirements, and data computation procedures for evaluating the acceptability of the continuous monitoring systems subject to approval by the Administrator.

2. Apparatus.

2.1 Calibrated Filters. Optical filters with neutral spectral characteristics and known optical densities to visible light or screens known to produce specified optical densities. Calibrated filters with accuracies certified by the manufacturer to within ±3 percent opacity shall be used. Filters required are low, mid, and high-range filters with nominal optical densities as follows when the transmissometer is spanned at opacity levels specified by applicable subparts:

| Span value (percent opacity) | Calibrated filter optical densities with equivalent opacity in parenthesis | | |
|---|---|---|---|
| | Low-range | Mid-range | High-range |
| 50 | 0.1 (20) | 0.2 (37) | 0.3 (50) |
| 60 | .1 (20) | .2 (37) | .3 (50) |
| 70 | .1 (20) | .3 (50) | .4 (60) |
| 80 | .1 (20) | .3 (50) | .6 (75) |
| 90 | .1 (20) | .4 (60) | .8 (80) |
| 100 | .1 (20) | .4 (60) | .9 (87.5) |

It is recommended that filter calibrations be checked with a well-collimated photopic transmissometer of known linearity prior to use. The filters shall be of sufficient size to attenuate the entire light beam of the transmissometer.

2.2 Data Recorder. Analog chart recorder or other suitable device with input voltage range compatible with the analyzer system output. The resolution of the recorder's data output shall be sufficient to allow completion of the test procedures within this specification.

2.3 Opacity measurement System. An in-stack transmissometer (folded or single path) with the optical design specifications designated below, associated control units and apparatus to keep optical surfaces clean.

3. Definitions.

3.1 Continuous Monitoring System. The total equipment required for the determination of pollutant opacity in a source effluent. Continuous monitoring systems consist of major subsystems as follows:

3.1.1 Sampling Interface. The portion of a continuous monitoring system for opacity that protects the analyzer from the effluent.

3.1.2 Analyzer. That portion of the continuous monitoring system which senses the pollutant and generates a signal output that is a function of the pollutant opacity.

3.1.3 Data Recorder. That portion of the continuous monitoring system that processes the analyzer output and provides a permanent record of the output signal in terms of pollutant opacity.

3.2 Transmissometer. The portions of a continuous monitoring system for opacity that include the sampling interface and the analyzer.

3.3 Span. The value of opacity at which the continuous monitoring system is set to produce the maximum data display output. The span shall be set at an opacity specified in each applicable subpart.

3.4 Calibration Error. The difference between the opacity reading indicated by the continuous monitoring system and the known values of a series of test standards. For this method the test standards are a series of calibrated optical filters or screens.

3.5 Zero Drift. The change in continuous monitoring system output over a stated period of time of normal continuous operation

when the pollutant concentration at the time of the measurements is zero

3.6 Calibration Drift. The change in the continuous monitoring system output over a stated period of time of normal continuous operation when the pollutant concentration at the time of the measurements is the same known upscale value.

3.7 System Response. The time interval from a step change in opacity in the stack at the input to the continuous monitoring system to the time at which 95 percent of the corresponding final value is reached as displayed on the continuous monitoring system data recorder.

3.8 Operational Test Period. A minimum period of time over which a continuous monitoring system is expected to operate within certain performance specifications without unscheduled maintenance, repair, or adjustment.

3.9 Transmittance. The fraction of incident light that is transmitted through an optical medium of interest.

3.10 Opacity. The fraction of incident light that is attenuated by an optical medium of interest. Opacity (O) and transmittance (T) are related as follows:

$$O = 1 - T$$

3.11 Optical Density. A logarithmic measure of the amount of light that it attenuated by an optical medium of interest. Optical density (D) is related to the transmittance and opacity as follows:

$D = -\log_{10} T$

$D = -\log_{10} (1-0)$

3.12 Peak Optical Response. The wavelength of maximum sensitivity of the instrument

3.13 Mean Spectral Response. The wavelength which bisects the total area under the curve obtained pursuant to paragraph 9.2.1

3.14 Angle of View. The maximum (total) angle of radiation detection by the photodetector assembly of the analyzer.

3.15 Angle of Projection. The maximum (total) angle that contains 95 percent of the radiation projected from the lamp assembly of the analyzer.

3.16 Pathlength. The depth of effluent in the light beam between the receiver and the transmitter of the single-pass transmissometer, or the depth of effluent between the transceiver and reflector of a double-pass transmissometer. Two pathlengths are referenced by this specification:

3.16.1 Monitor Pathlength. The depth of effluent at the installed location of the continuous monitoring system.

3.16.2 Emission Outlet Pathlength. The depth of effluent at the location emissions are released to the atmosphere

4. Installation Specification.

4.1 Location. The transmissometer must be located across a section of duct or stack that will provide a particulate matter flow through the optical volume of the transmissometer that is representative of the particulate matter flow through the duct or stack. It is recommended that the monitor pathlength or depth of effluent for the transmissometer include the entire diameter of the duct or stack. In installations using a short pathlength, extra caution must be used in determining the measurement location representative of the particulate matter flow through the duct or stack.

4.1.1 The transmissometer location shall be downstream from all particulate control equipment.

4.1.2 The transmissometer shall be located as far from bends and obstructions as practical

4.1.3 A transmissometer that is located in the duct or stack following a bend shall be installed in the plane defined by the bend where possible.

4.1.4 The transmissometer should be installed in an accessible location.

4.1.5 When required by the Administrator, the owner or operator of a source must demonstrate that the transmissometer is located in a section of duct or stack where a representative particulate matter distribution exists. The determination shall be accomplished by examining the opacity profile of the effluent at a series of positions across the duct or stack while the plant is in operation at maximum or reduced operating rates or by other tests acceptable to the Administrator.

4.2 Slotted Tube. Installations that require the use of a slotted tube shall use a slotted tube of sufficient size and blackness so as not to interfere with the free flow of effluent through the entire optical volume of the transmissometer or reflect light into the transmissometer photodetector. Light reflections may be prevented by using blackened baffles within the slotted tube to prevent the lamp radiation from impinging upon the tube walls, by restricting the angle of projection of the light and the angle of view of the photodetector assembly to less than the cross-sectional area of the slotted tube, or by other methods. The owner or operator must show that the manufacturer of the monitoring system has used appropriate methods to minimize light reflections for systems using slotted tubes.

4.3 Data Recorder Output. The continuous monitoring system output shall permit expanded display of the span opacity on a standard 0 to 100 percent scale. Since all opacity standards are based on the opacity of the effluent exhausted to the atmosphere, the system output shall be based upon the emission outlet pathlength and permanently recorded. For affected facilities whose monitor pathlength is different from the facility's emission outlet pathlength, a graph shall be provided with the installation to show the relationships between the continuous monitoring system recorded opacity based upon the emission outlet pathlength and the opacity of the effluent at the analyzer location (monitor pathlength). Tests for measurement of opacity that are required by this performance specification are based upon the monitor pathlength. The graph necessary to convert the data recorder output to the monitor pathlength basis shall be established as follows:

$$\log (1-0_2) = (l_1/l_2 \log (1-0_2)$$

where:

$0_1$ = the opacity of the effluent based upon $l_1$.

$0_2$ = the opacity of the effluent based upon $l_2$.

$l_1$ = the emission outlet pathlength.

$l_2$ = the monitor pathlength.

5. Optical Design Specifications.

The optical design specifications set forth in Section 6.1 shall be met in order for a measurement system to comply with the requirements of this method.

6. Determination of Conformance with Design Specifications.

6.1 The continuous monitoring system for measurement of opacity shall be demonstrated to conform to the design specifications set forth as follows:

6.1.1 Peak Spectral Response. The peak spectral response of the continuous monitoring systems shall occur between 500 nm and 600 nm. Response at any wavelength below 400 nm or above 700 nm shall be less than 10 percent of the peak response of the continuous monitoring system.

6.1.2 Mean Spectral Response The mean spectral response of the continuous monitoring system shall occur between 500 nm and 600 nm.

6.1.3 Angle of View. The total angle of view shall be no greater than 5 degrees.

6.1.4 Angle of Projection. The total angle of projection shall be no greater than 5 degress.

6.2 Conformance with requirements under Section 6.1 of this specification may be demonstrated by the owner or operator of the affected facility or by the manufacturer of the opacity measurement system. Where conformance is demonstrated by the manufacturer, certification that the tests were performed, a description of the test procedures, and the test results shall be provided by the manufacturer. If the source owner or operator demonstrates conformance, the procedures used and results obtained shall be reported.

6.3 The general test procedures to be followed to demonstrate conformance with Section 6 requirements are given as follows: (These procedures will not be applicable to all designs and will require modification in some cases. Where analyzer and optical design is certified by the manufacturer to conform with the angle of view or angle of projection specifications, the respective procedures may be omitted.)

6.3.1 Spectral Response. Obtain spectral data for detector, lamp, and filter components used in the measurement system from their respective manufacturers.

6.3.2 Angle of View. Set the received up as specified by the manufacturer. Draw an arc with radius of 3 meters. Measure the receiver response to a small (less than 3 centimeters) non-directional light source at 5-centimeter intervals on the arc for 26 centimeters on either side of the detector centerline. Repeat the test in the vertical direction.

6.3.3 Angle of Projection. Set the projector up as specified by the manufacturer. Draw an arc with radius of 3 meters. Using a small photoelectric light detector (less than 3 centimeters), measure the light intensity at 5-centimeter intervals on the arc for 26 centimeters on either side of the light source centerline of projection. Repeat the test in the vertical direction.

7. Continuous Monitoring System Performance Specifications.

The continuous monitoring system shall meet the performance specifications in Table 1-1 to be considered acceptable under this method.

TABLE 1-1.—*Performance specifications*

| *Parameter* | *Specifications* |
|---|---|
| a. Calibration error | ≤3 pct opacity.[1] |
| b. Zero drift (24 h) | ≤2 pct opacity.[1] |
| c. Calibration drift (24 h) | ≤2 pct opacity.[1] |
| d. Response time | 10 s (maximum). |
| e. Operational test period | 168 h. |

[1] Expressed as sum of absolute mean value and the 95 pct confidence interval of a series of tests.

8. Performance Specification Test Procedures. The following test procedures shall be used to determine conformance with the requirements of paragraph 7:

8.1 Calibration Error and Response Time Test. These tests are to be performed prior to installation of the system on the stack and may be performed at the affected facility or at other locations provided that proper notification is given. Set up and calibrate the measurement system as specified by the manufacturer's written instructions for the monitor pathlength to be used in the installation. Span the analyzer as specified in applicable subparts.

8.1.1 Calibration Error Test. Insert a series of calibration filters in the transmissometer path at the midpoint. A minimum of three calibration filters (low, mid, and high-range) selected in accordance with the table under paragraph 2.1 and calibrated within 3 percent must be used. Make a total of five nonconsecutive readings for each filter.

Record the measurement system output readings in percent opacity. (See Figure 1-1.)

8.1.2 System Response Test. Insert the high-range filter in the transmissometer path five times and record the time required for the system to respond to 95 percent of final zero and high-range filter values. (See Figure 1-2.)

8.2 Field Test for Zero Drift and Calibration Drift. Install the continuous monitoring system on the affected facility and perform the following alignments:

8.2.1 Preliminary Alignments. As soon as possible after installation and once a year thereafter when the facility is not in operation, perform the following optical and zero alignments:

8.2.1.1 Optical Alignment. Align the light beam from the transmissometer upon the optical surfaces located across the effluent (i.e., the retroflector or photodetector as applicable) in accordance with the manufacturer's instructions.

8.2.1.2 Zero Alignment. After the transmissometer has been optically aligned and the transmissometer mounting is mechanically stable (i.e., no movement of the mounting due to thermal contraction of the stack, duct, etc.) and a clean stack condition has been determined by a steady zero opacity condition, perform the zero alignment. This alignment is performed by balancing the continuous monitor system response so that any simulated zero check coincides with an actual zero check performed across the monitor pathlength of the clean stack.

8.2.1.3 Span. Span the continuous monitoring system at the opacity specified in subparts and offset the zero setting at least 10 percent of span so that negative drift can be quantified.

8.2.2. Final Alignments. After the preliminary alignments have been completed and the affected facility has been started up and reaches normal operating temperature, recheck the optical alignment in accordance with 8.2.1.1 of this specification. If the alignment has shifted, realign the optics, record any detectable shift in the opacity measured by the system that can be attributed to the optical realignment, and notify the Administrator. This condition may not be objectionable if the affected facility operates within a fairly constant and adequately narrow range of operating temperatures that does not produce significant shifts in optical alignment during normal operation of the facility. Under circumstances where the facility operations produce fluctuations in the effluent gas temperature that result in significant misalignments, the Administrator may require improved mounting structures or another location for installation of the transmissometer.

8.2.3 Conditioning Period. After completing the post-startup alignments, operate the system for an initial 168-hour conditioning period in a normal operational manner.

8.2.4 Operational Test Period. After completing the conditioning period, operate the system for an additional 168-hour period retaining the zero offset. The system shall monitor the source effluent at all times except when being zeroed or calibrated. At 24-hour intervals the zero and span shall be checked according to the manufacturer's instructions. Minimum procedures used shall provide a system check of the analyzer internal mirrors and all electronic circuitry including the lamp and photodetector assembly and shall include a procedure for producing a simulated zero opacity condition and a simulated upscale (span) opacity condition as viewed by the receiver. The manufacturer's written instructions may be used providing that they equal or exceed these minimum procedures. Zero and span the transmissometer, clean all optical surfaces exposed to the effluent, realign optics, and make any necessary adjustments to the calibration of the system daily. These zero and calibration adjustments and optical realignments are allowed only at 24-hour intervals or at such shorter intervals as the manufacturer's written instructions specify. Automatic corrections made by the measurement system without operator intervention are allowable at any time. The magnitude of any zero or span drift adjustments shall be recorded. During this 168-hour operational test period, record the following at 24-hour intervals: (a) the zero reading and span readings after the system is calibrated (these readings should be set at the same value at the beginning of each 24-hour period); (b) the zero reading after each 24 hours of operation, but before cleaning and adjustment; and (c) the span reading after cleaning and zero adjustment, but before span adjustment. (See Figure 1-3.)

9. Calculation, Data Analysis, and Reporting.

9.1 Procedure for Determination of Mean Values and Confidence Intervals.

9.1.1 The mean value of the data set is calculated according to equation 1-1.

$$\bar{x} = \frac{1}{n}\sum_{i=1}^{n} x_i \qquad \text{Equation 1-1}$$

where $x_i$ = absolute value of the individual measurements,

$\Sigma$ = sum of the individual values.
$\bar{x}$ = mean value, and
n = number of data points.

9.1.2 The 95 percent confidence interval (two-sided) is calculated according to equation 1-2:

$$C.I._{95} = \frac{t_{.975}}{n\sqrt{n-1}}\sqrt{n(\Sigma x_i^2) - (\Sigma x_i)^2} \qquad \text{Equation 1-2}$$

where
$\Sigma x_i$ = sum of all data points,
$t_{.975} = t_{1-\alpha/2}$, and
$C.I._{95}$ = 95 percent confidence interval estimate of the average mean value.

*Values for t.975*

| n | t.975 | n | t.975 |
|---|---|---|---|
| 2 | 12.706 | 10 | 2.262 |
| 3 | 4.303 | 11 | 2.228 |
| 4 | 3.182 | 12 | 2.201 |
| 5 | 2.776 | 13 | 2.179 |
| 6 | 2.571 | 14 | 2.160 |
| 7 | 2.447 | 15 | 2.145 |
| 8 | 2.365 | 16 | 2.131 |
| 9 | 2.306 | | |

The values in this table are already corrected for n-1 degrees of freedom. Use n equal to the number of samples as data points.

9.2 Data Analysis and Reporting.

9.2.1 Spectral Response. Combine the spectral data obtained in accordance with paragraph 6.3.1 to develop the effective spectral response curve of the transmissometer. Report the wavelength at which the peak response occurs, the wavelength at which the mean response occurs, and the maximum response at any wavelength below 400 nm and above 700 nm expressed as a percentage of the peak response as required under paragraph 6.2.

9.2.2 Angle of View. Using the data obtained in accordance with paragraph 6.3.2, calculate the response of the receiver as a function of viewing angle in the horizontal and vertical directions (26 centimeters of arc with a radius of 3 meters equal 5 degrees). Report relative angle of view curves as required under paragraph 6.2.

9.2.3 Angle of Projection. Using the data obtained in accordance with paragraph 6.3.3 calculate the response of the photoelectric detector as a function of projection angle in the horizontal and vertical directions. Report relative angle of projection curves as required under paragraph 6.2.

9.2.4 Calibration Error. Using the data from paragraph 8.1 (Figure 1-1), subtract the known filter opacity value from the value shown by the measurement system for each of the 15 readings. Calculate the mean and 95 percent confidence interval of the five different values at each test filter value according to equations 1-1 and 1-2. Report the sum of the absolute mean difference and the 95 percent confidence interval for each of the three test filters.

9.2.5 Zero Drift. Using the zero opacity values measured every 24 hours during the field test (paragraph 8.2), calculate the differences between the zero point after cleaning, aligning, and adjustment, and the zero value 24 hours later just prior to cleaning, aligning, and adjustment. Calculate the mean value of these points and the confidence interval using equations 1-1 and 1-2. Report the sum of the absolute mean value and the 95 percent confidence interval.

9.2.6 Calibration Drift. Using the span value measured every 24 hours during the field test, calculate the differences between the span value after cleaning, aligning, and adjustment of zero and span, and the span value 24 hours later just after cleaning, aligning, and adjustment of zero and before adjustment of span. Calculate the mean value of these points and the confidence interval using equations 1-1 and 1-2. Report the sum of the absolute mean value and the confidence interval.

9.2.7 Response Time. Using the data from paragraph 8.1, calculate the time interval from filter insertion to 95 percent of the final stable value for all upscale and downscale traverses. Report the mean of the 10 upscale and downscale test times.

9.2.8 Operational Test Period. During the 168-hour operational test period, the continuous monitoring system shall not require any corrective maintenance, repair, replacement, or adjustment other than that clearly specified as required in the manufacturer's operation and maintenance manuals as routine and expected during a one-week period. If the continuous monitoring system is operated within the specified performance parameters and does not require corrective maintenance, repair, replacement, or adjustment other than as specified above during the 168-hour test period, the operational test period shall have been successfully concluded. Failure of the continuous monitoring system to meet these requirements shall call for a repetition of the 168-hour test period. Portions of the tests which were satisfactorily completed need not be repeated. Failure to meet any performance specification(s) shall call for a repetition of the one-week operational test period and that specific portion of the tests required by paragraph 8 related to demonstrating compliance with the failed specification. All maintenance and adjustments required shall be recorded. Output readings shall be recorded before and after all adjustments.

10. References.

10.1 "Experimental Statistics," Department of Commerce, National Bureau of Standards Handbook 91, 1963, pp. 3-31, paragraphs 3-3.1.4.

10.2 "Performance Specifications for Stationary-Source Monitoring Systems for Gases and Visible Emissions," Environmental Protection Agency, Research Triangle Park, N.C., EPA-650/2-74-013, January 1974.

Calibrated Neutral Density Filter Data
(See paragraph 8.1.1)

| Low | Mid | High |
|---|---|---|
| Range ___% opacity | Range ___% opacity | Range ___% opacity |
| Span Value ____% opacity | | |

Date of Test _____ Location of Test _____

| | Calibrated Filter[1] | Analyzer Reading % Opacity | Differences[2] % Opacity |
|---|---|---|---|
| 1 | | | |
| 2 | | | |
| 3 | | | |
| 4 | | | |
| 5 | | | |
| 6 | | | |
| 7 | | | |
| 8 | | | |
| 9 | | | |
| 10 | | | |
| 11 | | | |
| 12 | | | |
| 13 | | | |
| 14 | | | |
| 15 | | | |

| | Low | Mid | High |
|---|---|---|---|
| Mean difference | ___ | ___ | ___ |
| Confidence interval | ___ | ___ | ___ |
| Calibration error = Mean Difference[3] + C.I. | ___ | ___ | ___ |

[1] Low, mid or high range
[2] Calibration filter opacity - analyzer reading
[3] Absolute value

Figure 1-1. Calibration Error Test

Date of Test _____ Location of Test _____
Span Filter _____ % Opacity
Analyzer Span Setting _____ % Opacity
Upscale
1 _____ seconds
2 _____ seconds
3 _____ seconds
4 _____ seconds
5 _____ seconds
Downscale
1 _____ seconds
2 _____ seconds
3 _____ seconds
4 _____ seconds
5 _____ seconds
Average response _____ seconds

Figure 1-2. Response Time Test

Zero Setting _____ (See paragraph 8.2.1) Date of Test _____

Span Setting _____

| Date and Time | Zero Reading (Before cleaning and adjustment) | Zero Drift (aZero) | Span Reading (After cleaning and zero adjustment but before span adjustment) | Calibration Drift (aSpan) |
|---|---|---|---|---|
| | | | | |
| | | | | |
| | | | | |
| | | | | |
| | | | | |
| | | | | |
| | | | | |
| | | | | |
| | | | | |
| | | | | |

Zero Drift = Mean Zero Drift* _____ + CI (Zero) _____ = _____.

Calibration Drift = Mean Span Drift* _____ + CI (Span) _____ = _____.

*Absolute value

Figure 1-3. Zero and Calibration Drift Test

PERFORMANCE SPECIFICATION 2—PERFORMANCE SPECIFICATIONS AND SPECIFICATION TEST PROCEDURES FOR MONITORS OF $SO_2$ AND $NO_x$ FROM STATIONARY SOURCES

1. Principle and Applicability.

1.1 Principle. The concentration of sulfur dioxide or oxides of nitrogen pollutants in stack emissions is measured by a continuously operating emission measurement system. Concurrent with operation of the continuous monitoring system, the pollutant concentrations are also measured with reference methods (Appendix A). An average of the continuous monitoring system data is computed for each reference method testing period and compared to determine the relative accuracy of the continuous monitoring system. Other tests of the continuous monitoring system are also performed to determine calibration error, drift, and response characteristics of the system.

1.2 Applicability. This performance specification is applicable to evaluation of continuous monitoring systems for measurement of nitrogen oxides or sulfur dioxide pollutants. These specifications contain test procedures, installation requirements, and data computation procedures for evaluating the acceptability of the continuous monitoring systems.

2. Apparatus.

2.1 Calibration Gas Mixtures. Mixtures of known concentrations of pollutant gas in a diluent gas shall be prepared. The pollutant gas shall be sulfur dioxide or the appropriate oxide(s) of nitrogen specified by paragraph 6 and within subparts. For sulfur dioxide gas mixtures, the diluent gas may be air or nitrogen. For nitric oxide (NO) gas mixtures, the diluent gas shall be oxygen-free (<10 ppm) nitrogen, and for nitrogen dioxide ($NO_2$) gas mixtures the diluent gas shall be air. Concentrations of approximately 50 percent and 90 percent of span are required. The 90 percent gas mixture is used to set and to check the span and is referred to as the span gas.

2.2 Zero Gas. A gas certified by the manufacturer to contain less than 1 ppm of the pollutant gas or ambient air may be used.

2.3 Equipment for measurement of the pollutant gas concentration using the reference method specified in the applicable standard.

2.4 Data Recorder. Analog chart recorder or other suitable device with input voltage range compatible with analyzer system output. The resolution of the recorder's data output shall be sufficient to allow completion of the test procedures within this specification.

2.5 Continuous monitoring system for $SO_2$ or $NO_x$ pollutants as applicable.

3. Definitions.

3.1 Continuous Monitoring System. The total equipment required for the determination of a pollutant gas concentration in a source effluent. Continuous monitoring systems consist of major subsystems as follows:

3.1.1 Sampling Interface—That portion of an extractive continuous monitoring system that performs one or more of the following operations: acquisition, transportation, and conditioning of a sample of the source effluent or that portion of an in-situ continuous monitoring system that protects the analyzer from the effluent.

3.1.2 Analyzer—That portion of the continuous monitoring system which senses the pollutant gas and generates a signal output that is a function of the pollutant concentration.

3.1.3 Data Recorder—That portion of the continuous monitoring system that provides a permanent record of the output signal in terms of concentration units.

3.2 Span. The value of pollutant concentration at which the continuous monitoring system is set to produce the maximum data display output. The span shall be set at the concentration specified in each applicable subpart.

3.3 Accuracy (Relative). The degree of correctness with which the continuous monitoring system yields the value of gas concentration of a sample relative to the value given by a defined reference method. This accuracy is expressed in terms of error, which is the difference between the paired concentration measurements expressed as a percentage of the mean reference value.

3.4 Calibration Error. The difference between the pollutant concentration indicated by the continuous monitoring system and the known concentration of the test gas mixture.

3.5 Zero Drift. The change in the continuous monitoring system output over a stated period of time of normal continuous operation when the pollutant concentration at the time for the measurements is zero

3.6 Calibration Drift. The change in the continuous monitoring system output over a stated time period of normal continuous operations when the pollutant concentration at the time of the measurements is the same known upscale value.

3.7 Response Time. The time interval from a step change in pollutant concentration at the input to the continuous monitoring system to the time at which 95 percent of the corresponding final value is reached as displayed on the continuous monitoring system data recorder.

3.8 Operational Period. A minimum period of time over which a measurement system is expected to operate within certain performance specifications without unscheduled maintenance, repair, or adjustment.

3.9 Stratification. A condition identified by a difference in excess of 10 percent between the average concentration in the duct or stack and the concentration at any point more than 1.0 meter from the duct or stack wall.

4. Installation Specifications. Pollutant continuous monitoring systems ($SO_2$ and $NO_x$) shall be installed at a sampling location where measurements can be made which are directly representative (4.1), or which can be corrected so as to be representative (4.2) of the total emissions from the affected facility. Conformance with this requirement shall be accomplished as follows:

4.1 Effluent gases may be assumed to be nonstratified if a sampling location eight or more stack diameters (equivalent diameters) downstream of any air in-leakage is selected. This assumption and data correction procedures under paragraph 4.2.1 may not be applied to sampling locations upstream of an air preheater in a stream generating facility under Subpart D of this part. For sampling locations where effluent gases are either demonstrated (4.3) or may be assumed to be nonstratified (eight diameters), a point (extractive systems) or path (in-situ systems) of average concentration may be monitored.

4.2 For sampling locations where effluent gases cannot be assumed to be nonstratified (less than eight diameters) or have been shown under paragraph 4.3 to be stratified, results obtained must be consistently representative (e.g. a point of average concentration may shift with load changes) or the data generated by sampling at a point (extractive systems) or across a path (in-situ systems) must be corrected (4.2.1 and 4.2.2) so as to be representative of the total emissions from the affected facility. Conformance with this requirement may be accomplished in either of the following ways:

4.2.1 Installation of a diluent continuous monitoring system ($O_2$ or $CO_2$ as applicable) in accordance with the procedures under paragraph 4.2 of Performance Specification 3 of this appendix. If the pollutant and diluent monitoring systems are not of the same type (both extractive or both in-situ) the extractive system must use a multipoint probe.

4.2.2 Installation of extractive pollutant monitoring systems using multipoint sampling probes or in-situ pollutant monitoring systems that sample or view emissions which are consistently representative of the total emissions for the entire cross section. The Administrator may require data to be sup-

mitted to demonstrate that the emissions sampled or viewed are consistently representative for several typical facility process operating conditions.

4.3 The owner or operator may perform a traverse to characterize any stratification of effluent gases that might exist in a stack or duct. If no stratification is present, sampling procedures under paragraph 4.1 may be applied even though the eight diameter criteria is not met.

4.4 When single point sampling probes for extractive systems are installed within the stack or duct under paragraphs 4.1 and 4.2.1, the sample may not be extracted at any point less than 1.0 meter from the stack or duct wall. Multipoint sampling probes installed under paragraph 4.2.2 may be located at any points necessary to obtain consistently representative samples.

5. Continuous Monitoring System Performance Specifications.

The continuous monitoring system shall meet the performance specifications in Table 2-1 to be considered acceptable under this method.

TABLE 2-1.—*Performance specifications*

| *Parameter* | *Specification* |
|---|---|
| 1. Accuracy [1] | ≤20 pct of the mean value of the reference method test data. |
| 2. Calibration error [1] | ≤ 5 pct of each (50 pct, 90 pct) calibration gas mixture value. |
| 3. Zero drift (2 h) [1] | 2 pct of span |
| 4. Zero drift (24 h) [1] | Do. |
| 5. Calibration drift (2 h) [1] | Do. |
| 6. Calibration drift (24 h) [1] | 2.5 pct. of span |
| 7. Response time | 15 min maximum. |
| 8. Operational period | 168 h minimum. |

[1] Expressed as sum of absolute mean value plus 95 pct confidence interval of a series of tests.

6. Performance Specification Test Procedures. The following test procedures shall be used to determine conformance with the requirements of paragraph 5. For $NO_x$ analyzers that oxidize nitric oxide (NO) to nitrogen dioxide ($NO_2$), the response time test under paragraph 6.3 of this method shall be performed using nitric oxide (NO) span gas. Other tests for $NO_x$ continuous monitoring systems under paragraphs 6.1 and 6.2 and all tests for sulfur dioxide systems shall be performed using the pollutant span gas specified by each subpart.

6.1 Calibration Error Test Procedure. Set up and calibrate the complete continuous monitoring system according to the manufacturer's writen instructions. This may be accomplished either in the laboratory or in the field.

6.1.1 Calibration Gas Analyses. Triplicate analyses of the gas mixtures shall be performed within two weeks prior to use using Reference Methods 6 for $SO_2$ and 7 for $NO_x$. Analyze each calibration gas mixture (50%, 90%) and record the results on the example sheet shown in Figure 2-1. Each sample test result must be within 20 percent of the averaged result or the tests shall be repeated. This step may be omitted for non-extractive monitors where dynamic calibration gas mixtures are not used (6.1.2).

6.1.2 Calibration Error Test Procedure. Make a total of 15 nonconsecutive measurements by alternately using zero gas and each calibration gas mixture concentration (e.g., 0%, 50%, 0%, 90%, 50%, 90%, 50%, 0%, etc.) For nonextractive continuous monitoring systems, this test procedure may be performed by using two or more calibration gas cells whose concentrations are certified by the manufacturer to be functionally equivalent to these gas concentrations. Convert the continuous monitoring system output readings to ppm and record the results on the example sheet shown in Figure 2-2.

6.2 Field Test for Accuracy (Relative), Zero Drift, and Calibration Drift. Install and operate the continuous monitoring system in accordance with the manufacturer's written instructions and drawings as follows:

6.2.1 Conditioning Period. Offset the zero setting at least 10 percent of the span so that negative zero drift can be quantified. Operate the system for an initial 168-hour conditioning period in normal operating manner.

6.2.2 Operational Test Period. Operate the continuous monitoring system for an additional 168-hour period retaining the zero offset. The system shall monitor the source effluent at all times except when being zeroed, calibrated, or backpurged.

6.2.2.1 Field Test for Accuracy (Relative). For continuous monitoring systems employing extractive sampling, the probe tip for the continuous monitoring system and the probe tip for the Reference Method sampling train should be placed at adjacent locations in the duct. For $NO_x$ continuous monitoring systems, make 27 $NO_x$ concentration measurements, divided into nine sets, using the applicable reference method. No more than one set of tests, consisting of three individual measurements, shall be performed in any one hour. All individual measurements of each set shall be performed concurrently, or within a three-minute interval and the results averaged. For $SO_2$ continuous monitoring systems, make nine $SO_2$ concentration measurements using the applicable reference method. No more than one measurement shall be performed in any one hour. Record the reference method test data and the continuous monitoring system concentrations on the example data sheet shown in Figure 2-3.

6.2.2.2 Field Test for Zero Drift and Calibration Drift. For extractive systems, determine the values given by zero and span gas pollutant concentrations at two-hour intervals until 15 sets of data are obtained. For nonextractive measurement systems, the zero value may be determined by mechanically producing a zero condition that provides a system check of the analyzer internal mirrors and all electronic circuitry including the radiation source and detector assembly or by inserting three or more calibration gas cells and computing the zero point from the upscale measurements. If this latter technique is used, a graph(s) must be retained by the owner or operator for each measurement system that shows the relationship between the upscale measurements and the zero point. The span of the system shall be checked by using a calibration gas cell certified by the manufacturer to be functionally equivalent to 50 percent of span concentration. Record the zero and span measurements (or the computed zero drift) on the example data sheet shown in Figure 2-4. The two-hour periods over which measurements are conducted need not be consecutive but may not overlap. All measurements required under this paragraph may be conducted concurrent with tests under paragraph 6.2.2.1.

6.2.2.3 Adjustments. Zero and calibration corrections and adjustments are allowed only at 24-hour intervals or at such shorter intervals as the manufacturer's written instructions specify. Automatic corrections made by the measurement system without operator intervention or initiation are allowable at any time. During the entire 168-hour operational test period, record on the example sheet shown in Figure 2-5 the values given by zero and span gas pollutant concentrations before and after adjustment at 24-hour intervals.

6.3 Field Test for Response Time.

6.3.1 Scope of Test. Use the entire continuous monitoring system as installed, including sample transport lines if used. Flow rates, line diameters, pumping rates, pressures (do not allow the pressurized calibration gas to change the normal operating pressure in the sample line), etc., shall be at the nominal values for normal operation as specified in the manufacturer's written instructions. If the analyzer is used to sample more than one pollutant source (stack), repeat this test for each sampling point.

6.3.2 Response Time Test Procedure. Introduce zero gas into the continuous monitoring system sampling interface or as close to the sampling interface as possible. When the system output reading has stabilized, switch quickly to a known concentration of pollutant gas. Record the time from concentration switching to 95 percent of final stable response. For non-extractive monitors, the highest available calibration gas concentration shall be switched into and out of the sample path and response times recorded. Perform this test sequence three (3) times. Record the results of each test on the example sheet shown in Figure 2-6.

7. Calculations, Data Analysis and Reporting.

7.1 Procedure for determination of mean values and confidence intervals.

7.1.1 The mean value of a data set is calculated according to equation 2-1.

$$\bar{x} = \frac{1}{n}\sum_{i=1}^{n} x_i \qquad \text{Equation 2-1}$$

where:

$x_i$ = absolute value of the measurements,
$\Sigma$ = sum of the individual values,
$\bar{x}$ = mean value, and
n = number of data points.

7.1.2 The 95 percent confidence interval (two-sided) is calculated according to equation 2-2:

$$C.I._{95} = \frac{t_{.975}}{n\sqrt{n-1}}\sqrt{n(\sum x_i^2) - (\sum x_i)^2} \qquad \text{Equation 2-2}$$

where:

$\sum x_i$ = sum of all data points,
$t_{.975} = t_{1-\alpha/2}$, and
$C.I._{95}$ = 95 percent confidence interval estimate of the average mean value.

Values for $t_{.975}$

| | $t_{.975}$ |
|---|---|
| 1 | 12.706 |
| 2 | 4.303 |
| 3 | 3.182 |
| 4 | 2.776 |
| 5 | 2.571 |
| 6 | 2.447 |
| 7 | 2.365 |
| 8 | 2.306 |
| 9 | 2.262 |
| 10 | 2.228 |
| 12 | 2.201 |
| 13 | 2.179 |
| 14 | 2.160 |
| 15 | 2.145 |
| 16 | 2.131 |

The values in this table are already corrected for n-1 degrees of freedom. Use n

equal to the number of samples as data points.

7.2 Data Analysis and Reporting.

7.2.1 Accuracy (Relative). For each of the nine reference method test points, determine the average pollutant concentration reported by the continuous monitoring system. These average concentrations shall be determined from the continuous monitoring system data recorded under 7.2.2 by integrating or averaging the pollutant concentrations over each of the time intervals concurrent with each reference method testing period. Before proceeding to the next step, determine the basis (wet or dry) of the continuous monitoring system data and reference method test data concentrations. If the bases are not consistent, apply a moisture correction to either reference method concentrations or the continuous monitoring system concentrations as appropriate. Determine the correction factor by moisture tests concurrent with the reference method testing periods. Report the moisture test method and the correction procedure employed. For each of the nine test runs determine the difference for each test run by subtracting the respective reference method test concentrations (use average of each set of three measurements for $NO_x$) from the continuous monitoring system integrated or averaged concentrations. Using these data, compute the mean difference and the 95 percent confidence interval of the differences (equations 2-1 and 2-2). Accuracy is reported as the sum of the absolute value of the mean difference and the 95 percent confidence interval of the differences expressed as a percentage of the mean reference method value. Use the example sheet shown in Figure 2-3.

7.2.2 Calibration Error. Using the data from paragraph 6.1, subtract the measured pollutant concentration determined under paragraph 6.1.1 (Figure 2-1) from the value shown by the continuous monitoring system for each of the five readings at each concentration measured under 6.1.2 (Figure 2-2). Calculate the mean of these difference values and the 95 percent confidence intervals according to equations 2-1 and 2-2. Report the calibration error (the sum of the absolute value of the mean difference and the 95 percent confidence interval) as a percentage of each respective calibration gas concentration. Use example sheet shown in Figure 2-2.

7.2.3 Zero Drift (2-hour). Using the zero concentration values measured each two hours during the field test, calculate the differences between consecutive two-hour readings expressed in ppm. Calculate the mean difference and the confidence interval using equations 2-1 and 2-2. Report the zero drift as the sum of the absolute mean value and the confidence interval as a percentage of span. Use example sheet shown in Figure 2-4.

7.2.4 Zero Drift (24-hour). Using the zero concentration values measured every 24 hours during the field test, calculate the differences between the zero point after zero adjustment and the zero value 24 hours later just prior to zero adjustment. Calculate the mean value of these points and the confidence interval using equations 2-1 and 2-2. Report the zero drift (the sum of the absolute mean and confidence interval) as a percentage of span. Use example sheet shown in Figure 2-5.

7.2.5 Calibration Drift (2-hour). Using the calibration values obtained at two-hour intervals during the field test, calculate the differences between consecutive two-hour readings expressed as ppm. These values should be corrected for the corresponding zero drift during that two-hour period. Calculate the mean and confidence interval of these corrected difference values using equations 2-1 and 2-2. Do not use the differences between non-consecutive readings. Report the calibration drift as the sum of the absolute mean and confidence interval as a percentage of span. Use the example sheet shown in Figure 2-4.

7.2.6 Calibration Drift (24-hour). Using the calibration values measured every 24 hours during the field test, calculate the differences between the calibration concentration reading after zero and calibration adjustment, and the calibration concentration reading 24 hours later after zero adjustment but before calibration adjustment. Calculate the mean value of these differences and the confidence interval using equations 2-1 and 2-2. Report the calibration drift (the sum of the absolute mean and confidence interval) as a percentage of span. Use the example sheet shown in Figure 2-5.

7.2.7 Response Time. Using the charts from paragraph 6.3, calculate the time interval from concentration switching to 95 percent to the final stable value for all upscale and downscale tests. Report the mean of the three upscale test times and the mean of the three downscale test times. The two average times should not differ by more than 15 percent of the slower time. Report the slower time as the system response time. Use the example sheet shown in Figure 2-6.

7.2.8 Operational Test Period. During the 168-hour performance and operational test period, the continuous monitoring system shall not require any corrective maintenance, repair, replacement, or adjustment other than that clearly specified as required in the operation and maintenance manuals as routine and expected during a one-week period. If the continuous monitoring system operates within the specified performance parameters and does not require corrective maintenance, repair, replacement or adjustment other than as specified above during the 168-hour test period, the operational period will be successfully concluded. Failure of the continuous monitoring system to meet this requirement shall call for a repetition of the 168-hour test period. Portions of the test which were satisfactorily completed need not be repeated. Failure to meet any performance specifications shall call for a repetition of the one-week performance test period and that portion of the testing which is related to the failed specification. All maintenance and adjustments required shall be recorded. Output readings shall be recorded before and after all adjustments.

8. References.

8.1 "Monitoring Instrumentation for the Measurement of Sulfur Dioxide in Stationary Source Emissions," Environmental Protection Agency, Research Triangle Park, N.C., February 1973.

8.2 "Instrumentation for the Determination of Nitrogen Oxides Content of Stationary Source Emissions," Environmental Protection Agency, Research Triangle Park, N.C., Volume 1, APTD-0847, October 1971; Volume 2, APTD-0942, January 1972.

8.3 "Experimental Statistics," Department of Commerce, Handbook 91, 1963, pp. 3-31, paragraphs 3-3.1.4.

8.4 "Performance Specifications for Stationary-Source Monitoring Systems for Gases and Visible Emissions," Environmental Protection Agency, Research Triangle Park, N.C., EPA-650/2-74-013, January 1974.

Date _____ Reference Method Used ____

Mid-Range Calibration Gas Mixture

Sample 1 _____ ppm

Sample 2 _____ ppm

Sample 3 _____ ppm

Average _____ ppm

High-Range (span) Calibration Gas Mixture

Sample 1 _____ ppm

Sample 2 _____ ppm

Sample 3 _____ ppm

Average _____ ppm

Figure 2-1. Analysis of Calibration Gas Mixtures

Calibration Gas Mixture Data (From Figure 2-1)

Mid (50%) _____ppm High (90%) _____ppm

| Run # | Calibration Gas Concentration, ppm | Measurement System Reading, ppm | Differences,[1] ppm |
|---|---|---|---|
| 1 | | | |
| 2 | | | |
| 3 | | | |
| 4 | | | |
| 5 | | | |
| 6 | | | |
| 7 | | | |
| 8 | | | |
| 9 | | | |
| 10 | | | |
| 11 | | | |
| 12 | | | |
| 13 | | | |
| 14 | | | |
| 15 | | | |

| | Mid | High |
|---|---|---|
| Mean difference | ____ | ____ |
| Confidence interval | ± ____ | ± ____ |
| Calibration error = $\frac{\text{Mean Difference}^2 + \text{C.I.}}{\text{Average Calibration Gas Concentration}} \times 100$ | ____% | ____% |

[1] Calibration gas concentration - measurement system reading

[2] Absolute value

Figure 2-2. Calibration Error Determination

| Test No. | Date and Time | Reference Method Samples: $SO_2$ Sample 1 (ppm) | $NO_x$ Sample 1 (ppm) | $NO_x$ Sample 2 (ppm) | $NO_x$ Sample 3 (ppm) | $NO_x$ Sample Average (ppm) | Analyzer 1-Hour Average (ppm)* $SO_2$ | $NO_x$ | Difference (ppm) $SO_2$ | $NO_x$ |
|---|---|---|---|---|---|---|---|---|---|---|
| 1 | | | | | | | | | | |
| 2 | | | | | | | | | | |
| 3 | | | | | | | | | | |
| 4 | | | | | | | | | | |
| 5 | | | | | | | | | | |
| 6 | | | | | | | | | | |
| 7 | | | | | | | | | | |
| 8 | | | | | | | | | | |
| 9 | | | | | | | | | | |

Mean reference method test value ($SO_2$) _____ Mean reference method test value ($NO_x$) _____ Average of the differences _____

Mean differences** = _____ ppm ($SO_2$). = _____ ppm ($NO_x$).

95% Confidence intervals = = ± _____ ppm ($SO_2$). = ± _____ ppm ($NO_x$).

Accuracies = $\frac{\text{Mean difference (absolute value)} + \text{95\% confidence interval}}{\text{Mean reference method value}} \times 100$ = ____% ($SO_2$). = ____% ($NO_x$).

* Explain and report method used to determine integrated averages.

** Mean differences = the average of the differences minus the mean reference method test value.

Figure 2-3. Accuracy Determination ($SO_2$ and $NO_x$)

| Data Set No. | Time Begin | Time End | Date | Zero Reading | Zero Drift (ΔZero) | Span Reading | Span Drift (ΔSpan) | Calibration Drift ( Span- Zero) |
|---|---|---|---|---|---|---|---|---|
| 1 | | | | | | | | |
| 2 | | | | | | | | |
| 3 | | | | | | | | |
| 4 | | | | | | | | |
| 5 | | | | | | | | |
| 6 | | | | | | | | |
| 7 | | | | | | | | |
| 8 | | | | | | | | |
| 9 | | | | | | | | |
| 10 | | | | | | | | |
| 11 | | | | | | | | |
| 12 | | | | | | | | |
| 13 | | | | | | | | |
| 14 | | | | | | | | |
| 15 | | | | | | | | |

Zero Drift = [Mean Zero Drift* _____ + CI (Zero) _____] ÷ [Span] x 100 = _____.
Calibration Drift = [Mean Span Drift* _____ + CI (Span) _____] ÷ [Span] x 100 = _____.
*Absolute Value.

Figure 2-4. Zero and Calibration Drift (2 Hour)

| Date and Time | Zero Reading | Zero Drift (ΔZero) | Span Reading (After zero adjustment) | Calibration Drift (ΔSpan) |
|---|---|---|---|---|
| | | | | |
| | | | | |
| | | | | |
| | | | | |
| | | | | |
| | | | | |
| | | | | |
| | | | | |
| | | | | |
| | | | | |

Zero Drift - [Mean Zero Drift* _____ + C.I. (Zero) _____]

÷ [Instrument Span] x 100 = _____.

Calibration Drift - [Mean Span Drift* _____ + C.I. (Span) _____]

÷ [Instrument Span] x 100 = _____.

* Absolute value

Figure 2-5. Zero and Calibration Drift (24-hour)

Date of Test _____

Span Gas Concentration _____ppm

Analyzer Span Setting _____ppm

Upscale
1 _____seconds
2 _____seconds
3 _____seconds
Average upscale response _____seconds

Downscale
1 _____seconds
2 _____seconds
3 _____seconds
Average downscale response _____seconds

System average response time (slower time) = _____seconds.

$$\%\text{deviation from slower system average response} = \left[\frac{\text{average upscale minus average downscale}}{\text{slower time}}\right] \times 100\% = ____.$$

Figure 2-6. Response Time

Performance Specification 3—Performance specifications and specification test procedures for monitors of $CO_2$ and $O_2$ from stationary sources.

1. Principle and Applicability.

1.1 Principle. Effluent gases are continuously sampled and are analyzed for carbon dioxide or oxygen by a continuous monitoring system. Tests of the system are performed during a minimum operating period to determine zero drift, calibration drift, and response time characteristics.

1.2 Applicability. This performance specification is applicable to evaluation of continuous monitoring systems for measurement of carbon dioxide or oxygen. These specifications contain test procedures, installation requirements, and data computation procedures for evaluating the acceptability of the continuous monitoring systems subject to approval by the Administrator. Sampling may include either extractive or non-extractive (in-situ) procedures.

2 Apparatus.

2.1 Continuous Monitoring System for Carbon Dioxide or Oxygen.

2.2 Calibration Gas Mixtures. Mixture of known concentrations of carbon dioxide or oxygen in nitrogen or air. Midrange and 90 percent of span carbon dioxide or oxygen concentrations are required. The 90 percent of span gas mixture is to be used to set and check the analyzer span and is referred to as span gas. For oxygen analyzers, if the span is higher than 21 percent $O_2$, ambient air may be used in place of the 90 percent of span calibration gas mixture. Triplicate analyses of the gas mixture (except ambient air) shall be performed within two weeks prior to use using Reference Method 3 of this part.

2.3 Zero Gas. A gas containing less than 100 ppm of carbon dioxide or oxygen.

2.4 Data Recorder. Analog chart recorder or other suitable device with input voltage range compatible with analyzer system output. The resolution of the recorder's data output shall be sufficient to allow completion of the test procedures within this specification.

3 Definitions.

3.1 Continuous Monitoring System. The total equipment required for the determination of carbon dioxide or oxygen in a given source effluent. The system consists of three major subsystems:

3.1.1 Sampling Interface. That portion of the continuous monitoring system that performs one or more of the following operations: delineation, acquisition, transportation, and conditioning of a sample of the source effluent or protection of the analyzer from the hostile aspects of the sample or source environment.

3.1.2 Analyzer. That portion of the continuous monitoring system which senses the pollutant gas and generates a signal output that is a function of the pollutant concentration.

3.1.3 Data Recorder. That portion of the continuous monitoring system that provides a permanent record of the output signal in terms of concentration units.

3.2 Span. The value of oxygen or carbon dioxide concentration at which the continuous monitoring system is set that produces the maximum data display output. For the purposes of this method, the span shall be set no less than 1.5 to 2.5 times the normal carbon dioxide or normal oxygen concentration in the stack gas of the affected facility.

3.3 Midrange. The value of oxygen or carbon dioxide concentration that is representative of the normal conditions in the stack gas of the affected facility at typical operating rates.

3.4 Zero Drift. The change in the continuous monitoring system output over a stated period of time of normal continuous operation when the carbon dioxide or oxygen concentration at the time for the measurements is zero.

3.5 Calibration Drift. The change in the continuous monitoring system output over a stated time period of normal continuous operation when the carbon dioxide or oxygen continuous monitoring system is measuring the concentration of span gas.

3.6 Operational Test Period. A minimum period of time over which the continuous monitoring system is expected to operate within certain performance specifications without unscheduled maintenance, repair, or adjustment.

3.7 Response time. The time interval from a step change in concentration at the input to the continuous monitoring system to the time at which 95 percent of the corresponding final value is displayed on the continuous monitoring system data recorder.

4. Installation Specification.

Oxygen or carbon dioxide continuous monitoring systems shall be installed at a location where measurements are directly representative of the total effluent from the affected facility or representative of the same effluent sampled by a $SO_2$ or $NO_x$ continuous monitoring system. This requirement shall be complied with by use of applicable requirements in Performance Specification 2 of this appendix as follows:

4.1 Installation of Oxygen or Carbon Dioxide Continuous Monitoring Systems Not Used to Convert Pollutant Data. A sampling location shall be selected in accordance with the procedures under paragraphs 4.2.1 or 4.2.2, or Performance Specification 2 of this appendix.

4.2 Installation of Oxygen or Carbon Dioxide Continuous Monitoring Systems Used to Convert Pollutant Continuous Monitoring System Data to Units of Applicable Standards. The diluent continuous monitoring system (oxygen or carbon dioxide) shall be installed at a sampling location where measurements that can be made are representative of the effluent gases sampled by the pollutant continuous monitoring system(s). Conformance with this requirement may be accomplished in any of the following ways:

4.2.1 The sampling location for the diluent system shall be near the sampling location for the pollutant continuous monitoring system such that the same approximate point(s) (extractive systems) or path (in-situ systems) in the cross section is sampled or viewed.

4.2.2 The diluent and pollutant continuous monitoring systems may be installed at different locations if the effluent gases at both sampling locations are nonstratified as determined under paragraphs 4.1 or 4.3, Performance Specification 2 of this appendix and there is no in-leakage occurring between the two sampling locations. If the effluent gases are stratified at either location, the procedures under paragraph 4.2.2, Performance Specification 2 of this appendix shall be used for installing continuous monitoring systems at that location.

5. Continuous Monitoring System Performance Specifications.

The continuous monitoring system shall meet the performance specifications in Table 3-1 to be considered acceptable under this method.

6. Performance Specification Test Procedures.

The following test procedures shall be used to determine conformance with the requirements of paragraph 4. Due to the wide variation existing in analyzer designs and principles of operation, these procedures are not applicable to all analyzers. Where this occurs, alternative procedures, subject to the approval of the Administrator, may be employed. Any such alternative procedures must fulfill the same purposes (verify response, drift, and accuracy) as the following procedures, and must clearly demonstrate conformance with specifications in Table 3-1.

6.1 Calibration Check. Establish a calibration curve for the continuous monitoring system using zero, midrange, and span concentration gas mixtures. Verify that the resultant curve of analyzer reading compared with the calibration gas value is consistent with the expected response curve as described by the analyzer manufacturer. If the expected response curve is not produced, additional calibration gas measurements shall be made, or additional steps undertaken to verify

the accuracy of the response curve of the analyzer.

6.2 Field Test for Zero Drift and Calibration Drift. Install and operate the continuous monitoring system in accordance with the manufacturer's written instructions and drawings as follows:

TABLE 3-1.—*Performance specifications*

| *Parameter* | *Specification* |
|---|---|
| 1. Zero drift (2 h) [1] | ≤0.4 pct $O_2$ or $CO_2$. |
| 2. Zero drift (24 h) [1] | ≤0.5 pct $O_2$ or $CO_2$. |
| 3. Calibration drift (2 h) [1] | ≤0.4 pct $O_2$ or $CO_2$. |
| 4. Calibration drift (24 h) [1] | ≤0.5 pct $O_2$ or $CO_2$. |
| 5. Operational period | 168 h minimum. |
| 6. Response time | 10 min. |

[1] Expressed as sum of absolute mean value plus 95 pct confidence interval of a series of tests.

6.2.1 Conditioning Period. Offset the zero setting at least 10 percent of span so that negative zero drift may be quantified. Operate the continuous monitoring system for an initial 168-hour conditioning period in a normal operational manner.

6.2.2. Operational Test Period. Operate the continuous monitoring system for an additional 168-hour period maintaining the zero offset. The system shall monitor the source effluent at all times except when being zeroed, calibrated, or backpurged.

6.2.3 Field Test for Zero Drift and Calibration Drift. Determine the values given by zero and midrange gas concentrations at two-hour intervals until 15 sets of data are obtained. For non-extractive continuous monitoring systems, determine the zero value given by a mechanically produced zero condition or by computing the zero value from upscale measurements using calibrated gas cells certified by the manufacturer. The midrange checks shall be performed by using certified calibration gas cells functionally equivalent to less than 50 percent of span. Record these readings on the example sheet shown in Figure 3-1. These two-hour periods need not be consecutive but may not overlap. In-situ $CO_2$ or $O_2$ analyzers which cannot be fitted with a calibration gas cell may be calibrated by alternative procedures acceptable to the Administrator. Zero and calibration corrections and adjustments are allowed only at 24-hour intervals or at such shorter intervals as the manufacturer's written instructions specify. Automatic corrections made by the continuous monitoring system without operator intervention or initiation are allowable at any time. During the entire 168-hour test period, record the values given by zero and span gas concentrations before and after adjustment at 24-hour intervals in the example sheet shown in Figure 3-2.

6.3 Field Test for Response Time.

6.3.1 Scope of Test.

This test shall be accomplished using the continuous monitoring system as installed, including sample transport lines if used. Flow rates, line diameters, pumping rates, pressures (do not allow the pressurized calibration gas to change the normal operating pressure in the sample line), etc., shall be at the nominal values for normal operation as specified in the manufacturer's written instructions. If the analyzer is used to sample more than one source (stack), this test shall be repeated for each sampling point.

6.3.2 Response Time Test Procedure.

Introduce zero gas into the continuous monitoring system sampling interface or as close to the sampling interface as possible. When the system output reading has stabilized, switch quickly to a known concentration of gas at 90 percent of span. Record the time from concentration switching to 95 percent of final stable response. After the system response has stabilized at the upper level, switch quickly to a zero gas. Record the time from concentration switching to 95 percent of final stable response. Alternatively, for nonextractive continuous monitoring systems, the highest available calibration gas concentration shall be switched into and out of the sample path and response times recorded. Perform this test sequence three (3) times. For each test, record the results on the data sheet shown in Figure 3-3.

7. Calculations, Data Analysis, and Reporting.

7.1 Procedure for determination of mean values and confidence intervals.

7.1.1 The mean value of a data set is calculated according to equation 3-1.

$$\bar{x}=\frac{1}{n}\sum_{i=1}^{n}x_i \qquad \text{Equation 3-1}$$

where:

$x_i$ = absolute value of the measurements,
$\Sigma$ = sum of the individual values,
$\bar{x}$ = mean value, and
n = number of data points.

7.2.1 The 95 percent confidence interval (two-sided) is calculated according to equation 3-2:

$$C.I._{95}=\frac{t_{.975}}{n\sqrt{n-1}}\sqrt{n(\Sigma x_i^2)-(\Sigma x_i)^2} \qquad \text{Equation 3-2}$$

where:

$\Sigma X$ = sum of all data points,
$t_{.975}=t_{1-\alpha/2}$, and
$C.I._{95}$ = 95 percent confidence interval estimated of the average mean value. value.

*Values for* $t_{.975}$

| n | $t_{.975}$ |
|---|---|
| 2 | 12.706 |
| 3 | 4.303 |
| 4 | 3.182 |
| 5 | 2.776 |
| 6 | 2.571 |
| 7 | 2.447 |
| 8 | 2.365 |
| 9 | 2.306 |
| 10 | 2.262 |
| 11 | 2.228 |
| 12 | 2.201 |
| 13 | 2.179 |
| 14 | 2.160 |
| 15 | 2.145 |
| 16 | 2.131 |

The values in this table are already corrected for n-1 degrees of freedom. Use n equal to the number of samples as data points.

7.2 Data Analysis and Reporting.

7.2.1 Zero Drift (2-hour). Using the zero concentration values measured each two hours during the field test, calculate the differences between the consecutive two-hour readings expressed in ppm. Calculate the mean difference and the confidence interval using equations 3-1 and 3-2. Record the sum of the absolute mean value and the confidence interval on the data sheet shown in Figure 3-1.

7.2.2 Zero Drift (24-hour). Using the zero concentration values measured every 24 hours during the field test, calculate the differences between the zero point after zero adjustment and the zero value 24 hours later just prior to zero adjustment. Calculate the mean value of these points and the confidence interval using equations 3-1 and 3-2. Record the zero drift (the sum of the absolute mean and confidence interval) on the data sheet shown in Figure 3-2.

7.2.3 Calibration Drift (2-hour). Using the calibration values obtained at two-hour intervals during the field test, calculate the differences between consecutive two-hour readings expressed as ppm. These values should be corrected for the corresponding zero drift during that two-hour period. Calculate the mean and confidence interval of these corrected difference values using equations 3-1 and 3-2. Do not use the differences between non-consecutive readings. Record the sum of the absolute mean and confidence interval upon the data sheet shown in Figure 3-1.

7.2.4 Calibration Drift (24-hour). Using the calibration values measured every 24 hours during the field test, calculate the differences between the calibration concentration reading after zero and calibration adjustment and the calibration concentration reading 24 hours later after zero adjustment but before calibration adjustment. Calculate the mean value of these differences and the confidence interval using equations 3-1 and 3-2. Record the sum of the absolute mean and confidence interval on the data sheet shown in Figure 3-2.

7.2.5 Operational Test Period. During the 168-hour performance and operational test period, the continuous monitoring system shall not receive any corrective maintenance, repair, replacement, or adjustment other than that clearly specified as required in the manufacturer's written operation and maintenance manuals as routine and expected during a one-week period. If the continuous monitoring system operates within the specified performance parameters and does not require corrective maintenance, repair, replacement or adjustment other than as specified above during the 168-hour test period, the operational period will be successfully concluded. Failure of the continuous monitoring system to meet this requirement shall call for a repetition of the 168 hour test period. Portions of the test which were satisfactorily completed need not be repeated. Failure to meet any performance specifications shall call for a repetition of the one-week performance test period and that portion of the testing which is related to the failed specification. All maintenance and adjustments required shall be recorded. Output readings shall be recorded before and after all adjustments.

7.2.6 Response Time. Using the data developed under paragraph 5.3, calculate the time interval from concentration switching to 95 percent to the final stable value for all upscale and downscale tests. Report the mean of the three upscale test times and the mean of the three downscale test times. The two average times should not differ by more than 15 percent of the slower time. Report the slower time as the system response time. Record the results on Figure 3-3.

8. References.

8.1 "Performance Specifications for Stationary Source Monitoring Systems for Gases and Visible Emissions," Environmental Protection Agency, Research Triangle Park, N.C., EPA-650/2-74-013, January 1974.

8.2 "Experimental Statistics," Department of Commerce, National Bureau of Standards Handbook 91, 1963, pp 3-31, paragraphs 3-3.1.4.

(Secs. 111 and 114 of the Clean Air Act, as amended by sec 4(a) of Pub L. 91-604, 84 Stat. 1678 (42 U S C. 1857c-6, by sec 15(c)(2) of Pub. L. 91-604, 85 Stat. 1713 (42 U S C. 1857g)).

| Data Set No. | Time Begin | Time End | Date | Zero Reading | Zero Drift (ΔZero) | Span Reading | Span Drift (ΔSpan) | Calibration Drift (ΔSpan-ΔZero) |
|---|---|---|---|---|---|---|---|---|
| 1 | | | | | | | | |
| 2 | | | | | | | | |
| 3 | | | | | | | | |
| 4 | | | | | | | | |
| 5 | | | | | | | | |
| 6 | | | | | | | | |
| 7 | | | | | | | | |
| 8 | | | | | | | | |
| 9 | | | | | | | | |
| 10 | | | | | | | | |
| 11 | | | | | | | | |
| 12. | | | | | | | | |
| 13 | | | | | | | | |
| 14 | | | | | | | | |
| 15 | | | | | | | | |

Zero Drift = [Mean Zero Drift* _____ + CI (Zero) _____] = _____.
Calibration Drift = [Mean Span Drift* _____ + CI (Span _____] = _____.
*Absolute Value.

Figure 3-1. Zero and Calibration Drift (2 Hour).

| Date and Time | Zero Reading | Zero Drift (ΔZero) | Span Reading (After zero adjustment) | Calibration Drift (ΔSpan) |
|---|---|---|---|---|
| | | | | |
| | | | | |
| | | | | |
| | | | | |
| | | | | |
| | | | | |
| | | | | |
| | | | | |
| | | | | |
| | | | | |

Zero Drift = [Mean Zero Drift* _____ + C.I. (Zero) _____]
= _____.

Calibration Drift = [Mean Span Drift* _____ + C.I. (Span) _____]
= _____.

* Absolute value

Figure 3-2. Zero and Calibration Drift (24-hour)

Date of Test _____

Span Gas Concentration _____ ppm

Analyzer Span Setting _____ ppm

Upscale
1. _____ seconds
2. _____ seconds
3. _____ seconds

Average upscale response _____ seconds

Downscale
1. _____ seconds
2. _____ seconds
3. _____ seconds

Average downscale response _____ seconds

System average response time (slower time) = _____ seconds

% deviation from slower system average response = $\frac{\text{average upscale minus average downscale}}{\text{slower time}} \times 100\%$

= _____

Figure 3-3. Response

[FR Doc.75-26565 Filed 10-3-75;8:45 am]

federal register

TUESDAY, OCTOBER 12, 1976

PART III:

# ENVIRONMENTAL PROTECTION AGENCY

## Emission Monitoring Requirements

■

## RECEIPT OF APPLICATION AND APPROVAL OF ALTERNATIVE MONITORING REQUIREMENTS

## ENVIRONMENTAL PROTECTION AGENCY

[FRL 628-3]

### EMISSION MONITORING REQUIREMENTS

#### Receipt of Application and Approval of Alternative Monitoring Requirements

On October 6, 1975 (40 FR 46247 and 46256), and on August 20, 1976 (41 FR 35185) the Environmental Protection Agency (EPA) promulgated regulations under 40 CFR Parts 51 and 60 which require continuous emission monitoring of sulfur dioxide and oxides of nitrogen at new and certain existing fossil fuel-fired steam generators. The regulations require that the emission rate be computed using an equation which requires the measurement of the pollutant concentration and percent oxygen in the stack gas on a dry basis only. However, paragraph 3.9.1 of Appendix P to 40 CFR Part 51 and § 60.13(i)(3) of 40 CFR Part 60 provide for application for approval of "alternative monitoring requirements to accommodate continuous monitoring systems that require additional measurements to correct for stack moisture conditions."

EPA has received two written applications for approval of alternative monitoring requirements; one was received from Lear Siegler, Incorporated, Englewood, Colorado, on January 9, 1976, and one from E. I. duPont de Nemours and Company, Wilmington, Delaware, on January 23, 1976. Specifically, the applicants requested approval of alternative emission data reduction procedures to be used with wet-basis stack gas pollutant and oxygen monitoring data from fossil fuel-fired steam generators. EPA has completed a technical review of the applications and approves the following alternative data reduction procedures using wet-basis pollutant and oxygen data for new stationary sources regulated by 40 CFR Part 60. State control agencies may include these data reduction techniques in their Implementation Plans.

a. The following equation may be used for the determination of sulfur dioxide and oxides of nitrogen emissions from fossil fuel-fired steam generators when the pollutant and oxygen concentrations are measured on a wet basis except where wet scrubbers are employed, or where moisure is otherwise added to the stack gases:

$$E = C_{ws} F_w \left( \frac{20.9}{20.9\,(1 - B_{ws}) - \%O_{2ws}} \right)$$

where:

1. $E$=pollutant emission, g/million cal (lb/million Btu).

2. $C_{ws}$=pollutant concentration at stack conditions, g/wscm (grams/wet standard cubic meter) (lb/wscf (pounds/wet standard cubic foot)), determined by multiplying the average concentration (ppm) for each one-hour period by $4.15 \times 10^{-5}$ $M$ g/wscm per ppm ($2.59 \times 10^{-9}$ $M$ lb/wscf per ppm) where M-pollutant molecular weight, g/g-mole (lb/lb-mole). $M$=64.07 for sulfur dioxide and 46.01 for nitrogen oxides.

3. $\%O_{2ws}$=oxygen volume (expressed as percent—wet-basis determined with equipment specified under paragraph (d) of section 60.45.

4. $F_w$=a factor representing a ratio of the volume of wet flue gases generated to the calorific value of the fuel combusted. Values of $F_w$ are given as follows:

(i) For anthracite coal as classified according to A.S.T.M. D388-66, $F_w$=1.188 wscm/million cal (10580 wscf/million Btu).

(ii) For sub-bituminous and bituminous coal as classified according to A.S.T.M. D388-66, $F_w$=1.200 wscm/million cal (10680 wscf/million Btu).

(iii) For liquid fossil fuels including crude, residual, and distillate oils, $F_w$=1.164 wscm/million cal (10360 wscf/million Btu).

(iv) For gaseous fossil fuels: For natural gas, $F_w$=1.196 wscm/million cal (10650 wscf/million Btu). For propane, $F_w$=1.150 wscm/million cal (10240 wscf/million Btu). For butane, $F_w$=1.172 wscm/million cal (10430 wscf/million Btu).

Values of $F_w$ may be determined from a fuel analysis as follows:

$$F_w = \frac{347.4\ \%H + 95.7\ \%C + 35.4\ \%S + 8.6\ \%N - 28.5\ \%O + 13.4\ \%H_2O^{1}}{GCV_w} \quad \text{(Metric)}$$

$$F_w = \frac{10^6\,[5.56\ \%H + 1.53\ \%C + 0.57\ \%S + 0.14\ \%N - 0.46\ \%O + 0.21\ \%H_2O^{1}]}{GCV_w} \quad \text{(English)}$$

[1] This term may be omitted if % H+% O includes the unavailable hydrogen and oxygen in the form of $H_2O$.

where:

H, C, S, N, and O are content by weight of hydrogen, carbon, sulfur, nitrogen, and oxygen (expressed as percent), respectively, as determined on the same basis as $GCV_w$ by ultimate analysis of the fuel fired, using A.S.T.M. method D3178-74 or D3176 (solid fuels), or computed from results using A.S.T.M. methods D1137-53(70), D1945-64 (73), or D1946-67(72) (gaseous fuels) as applicable.

$GCV_w$ is the gross calorific value (cal/g, Btu/lb) of the fuel combusted on an "as received" or "as fired" basis (i.e., the analysis should include the free moisture), determined by the A.S.T.M. test methods D2015-66(72) for solid fuels and D 1826-64(70) for gaseous fuels as applicable.

5. $B_{ws}$= proportion by volume of water vapor in the ambient air. Approval may be given for determination of $B_{ws}$ by on-site instrumental measurement provided that the absolute accuracy of the measurement technique can be demonstrated to be within ±0.7 percent water vapor. In lieu of actual measurement, $B_{ws}$ may be estimated as follows:

NOTE.—That the following estimating factors are selected to assure that any negative error introduced in the term

$$\left( \frac{20.9}{20.9\,(1 - B_{ws}) - \%O_{2ws}} \right)$$

will not be larger than −1.5 percent. However, positive errors, or over-estimation of emissions, of as much as 5 percent may be introduced depending upon the geographic location of the facility and the associated range of ambient moisture.)

(i) $B_{ws}$=0.027. This factor may be used as a constant value at any location.

(ii) $B_{ws}$=highest monthly average of $B_{ws}$ which occurred within a calendar year at the nearest Weather Bureau station.

(iii) $B_{ws}$=highest daily average of $B_{ws}$ which occurred within a calendar month at the nearest Weather Bureau station, calculated from data for the past three years. This factor shall be calculated for each month and may be used as an estimating factor for the respective calendar month.

b. The following equation may be used for the determination of sulfur dioxide and oxides of nitrogen pollutant emissions from fossil fuel-fired steam generators where the pollutant and oxygen concentrations are measured on a wet basis and the water vapor content of the stack gas is determined at least once every fifteen minutes. When wet scrubbers are employed prior to where the stack gas is sampled or if liquid water droplets or mist is otherwise present in the stack gas, use of a heated extractive monitoring system may collect and vaporize condensed liquid. As a result, the vapor content of the stack gas may be significantly different from the vapor content where the pollutant and oxygen concentrations are measured. Therefore, in all applications of the following equation, the water vapor content must be measured in the monitoring system or stack such that the measured vapor content is the same as the vapor content existing at the point where the pollutant and oxygen measurements are made.

$$E = C_{ws} F \left( \frac{20.9}{20.9(1 - B_{ws}) - \%O_{2ws}} \right)$$

where:

1. $E$=pollutant emission, g/million cal (lb/million Btu).

2. $C_{ws}$=pollutant concentration at stack conditions, g/wscm (lb/wscf), determined by multiplying the average concentration (ppm) for each one-hour period by $4.15 \times 10^{-5}$ $M$ g/wscm per ppm ($2.59 \times 10^{-9}$ $M$ lb/wscf per ppm) where $M$=pollutant molecular weight, g/g-mole (lb/lb-mole). $M$=64.07 for sulfur dioxide and 46.01 for nitrogen oxides.

3. $\%_{ws}$=oxygen volume (expressed as percent—wet-basis) determine with equipment specified under paragraph (d) of section 60.45.

4. $F$=a factor representing a ratio of the volume of dry flue gases generated, to the calorific value of the fuel combusted as specified in section 60.45.

5. $B_{w,}$=proportion by volume of water vapor in the stack gas.

This equation is approved in principle. Approval for actual practice is contingent upon demonstrating the ability to accurately determine $B_{w,}$ such that any absolute error in $B_{w,}$ will not cause an error of more than ±1.5 percent in the term

$$\left(\frac{20.9}{20.9(1-B_{w,})-\%O_{2w,}}\right)$$

IMPACT OF ACTION ON STATE IMPLEMENTATION PLANS

In accordance with regulations promulgated by the Agency on October 6, 1975, States are required to submit regulations that provide for continuous emission monitoring of certain existing sources. Such State regulations shall be submitted to EPA for approval and shall be considered a revision to the approved State Implementation Plan. According to the EPA requirements, States shall set forth performance specifications for monitoring instruments and require that data derived from such monitoring be summarized and made available. Minimum performance standards and other procedures are set forth in 40 CFR Part 51, Appendix P. These requirements allow States to consider alternate procedures when such procedures are determined to be as accurate as those contained within Appendix P.

States are advised that as a result of this notice, EPA now approves the use of two alternate data reduction procedures not currently contained within Appendix P. It should be noted that this action does not mandate acceptance or use of these alternate procedures by any State. This action does, however, signify the Agency's intent to approve State plans employing these data reduction procedures where States determine that such procedures are amendable to their control programs.

Dated: September 30, 1976.

ROGER STRELOW,
*Assistant Administrator for Air and Waste Management.*

[FR Doc.76-29710 Filed 10-8-76;8:45 am]

federal register

MONDAY, JANUARY 31, 1977

PART X

# ENVIRONMENTAL PROTECTION AGENCY

■

## REVISIONS TO EMISSION MONITORING REQUIREMENTS AND TO REFERENCE METHODS

## Title 40—Protection of Environment

## CHAPTER I—ENVIRONMENTAL PROTECTION AGENCY

[FRL 669-4]

## PART 60—STANDARDS OF PERFORMANCE FOR NEW STATIONARY SOURCES

### Revisions to Emission Monitoring Requirements and to Reference Methods

On October 6, 1975 (40 FR 46250), under sections 111, 114, and 301 of the Clean Air Act, as amended, the Environmental Protection Agency (EPA) promulgated emission monitoring requirements and revisions to the performance testing Reference Methods in 40 CFR Part 60. Since that time, EPA has determined that there is a need for a number of revisions to clarify the requirements. Each of the revisions being made in 40 CFR Part 60 are discussed as follows:

1. *Section 60.13* Paragraph (c)(3) has been rewritten to clarify that not only new monitoring systems but also upgraded monitoring systems must comply with applicable performance specifications.

Paragraph (e)(1) is revised to provide that data recording is not required more frequently than once every six minutes (rather than the previously required ten seconds) for continuous monitoring systems measuring the opacity of emissions. Since reports of excess emissions are based upon review of six-minute averages, more frequent data recording is not required in order to satisfy these monitoring requirements.

2. *Section 60.45.* Paragraphs (a) through (e) have been reorganized for clarification. In addition, restrictions on use of continuous monitoring systems for measuring oxygen on a wet basis have been removed. Prior to this revision, only dry basis oxygen monitoring equipment was acceptable. Procedures for use of wet basis oxygen monitoring equipment have been approved by EPA and were published in the FEDERAL REGISTER as an alternative procedure (41 FR 44838).

Also deleted from § 60.45 are restrictions on the location of a carbon dioxide ($CO_2$) continuous monitoring system downstream of wet scrubber flue gas desulfurization equipment. At the time the regulations were promulgated (October 6, 1975), EPA thought that limestone scrubbers were operated under conditions that could cause significant generation or absorption of $CO_2$ by the scrubbing solution which would cause errors in the monitoring results. EPA investigated this potential problem and concluded that lime or limestone scrubbers under typical conditions of operation do not significantly alter the concentration of $CO_2$ in the flue gas and would not introduce significant errors into the monitoring results. Lime scrubbers operate at a pH level between 7 and 8 which will maximize $SO_2$ absorption and minimize $CO_2$ absorption. Thus, the effect of $CO_2$ loss on the emission results is expected to be minimal. The exact amount of $CO_2$ loss, if any, during the scrubber operation has not been determined since it is dependent upon the operating conditions for a particular facility. Although each percent of $CO_2$ absorption will result in a positive bias of 7.1 percent (at a stack concentration of 14 percent $CO_2$) in the final emission results, i.e. the indicated results may be higher than actual stack concentrations, the actual bias is expected to be very small since the amount of $CO_2$ absorption will be much less than one percent.

In flue gases from limestone scrubbers, there exists a possibility of the addition of $CO_2$ from the scrubbing reaction to the $CO_2$ from the fuel combustion. Every two molecules of $SO_2$ reacting with the limestone will produce a molecule of $CO_2$. Limestone scrubbers are typically operated at an approximate temperature of 50° C under acidic conditions. At these operating conditions the amount of $CO_2$ generated in a 90 percent efficiency scrubber is 1350 ppm or 0.135 percent $CO_2$. This will introduce a negative bias of 1 to 1.5 percent for a $CO_2$ level of 8 to 15 percent. This amount of potential error compares favorably with systems previously approved. Therefore, EPA is removing the restrictions which limited the installation of carbon dioxide continuous monitoring systems to a location upstream of the scrubber.

Several other revisions are being made to paragraphs (a), (b), (c), and (e) of Subpart D which improve the clarity or further define the intent of the regulations. Paragraph (d) has been reserved for later addition of fuel monitoring provisions.

3. *Performance Specification 1.* Paragraph 6.2 has been rewritten to clarify requirements that must be met by continuous opacity monitor manufacturers. Manufacturers must certify that at least one analyzer from each month's production was tested and meets all applicable requirements. If any requirements are not met, the production for the month must be resampled according to military standard 105D (MIL-STD-105D) and retested. Previously the regulation required that each unit of production had to be tested. Copies of MIL-STD-105D may be purchased from the Superintendent of Documents, U.S. Government Printing Office, Washington, D.C. 20402.

4. *Performance Specification 2.* Figure 2-3 of Performance Specification 2 has been corrected to properly define the term "mean differences." The corrections in the operations now conform with the statistical definitions of the specifications.

5. *General.* These amendments provide optional monitoring procedures that may be selected by an owner or operator of a facility affected by the monitoring requirements of 40 CFR Part 60. Certain editorial clarifications are also included. Proposal of these amendments is not necessary because the changes are either interpretative in nature, or represent minor changes in instrumentation testing and data recording, or allow a wider selection of equipment to be used. These changes will have no effect upon the number of emission sources that must be monitored or the quality of the resultant emission data. The changes are consistent with recent determinations of the Administrator with respect to use of alternative continuous monitoring systems.

6. *Effective date.* These revisions become effective March 2, 1977.

(Secs. 111, 114, 301(a), Clean Air Act, as amended, Pub. L. 91-604, 84 Stat. 1678 (42 U.S.C. 1857c-6, 1857c-9, 1857g(a)).)

NOTE.—The Environmental Protection Agency has determined that this document does not contain a major proposal requiring preparation of an Inflation Impact Statement under Executive Order 11821 and OMB Circular A-107.

Dated: January 19, 1977.

JOHN QUARLES,
*Acting Administrator.*

In 40 CFR Part 60 Subpart A, Subpart D, and Appendix B are amended as follows:

### Subpart A—General Provisions

1. Section 60.13 is amended by revising paragraphs (c)(3) and (e)(1) as follows:

**§ 60.13 Monitoring requirements.**

* * * * *

(c) * * *

(3) All continuous monitoring systems referenced by paragraph (c)(2) of this section shall be upgraded or replaced (if necessary) with new continuous monitoring systems, and the new or improved systems shall be demonstrated to comply with applicable performance specifications under paragraph (c)(1) of this section on or before September 11, 1979.

* * * * *

(e) * * *

(1) All continuous monitoring systems referenced by paragraphs (c)(1) and (c)(2) of this section for measuring opacity of emissions shall complete a minimum of one cycle of sampling and analyzing for each successive ten-second period and one cycle of data recording for each successive six-minute period.

* * * * *

### Subpart D—Standards of Performance for Fossil Fuel-Fired Steam Generators

2. Section 60.45 is amended by revising paragraphs (a), (b), (c), and (e) and by reserving paragraph (d) as follows:

**§ 60.45 Emission and fuel monitoring.**

(a) Each owner or operator shall install, calibrate, maintain, and operate continuous monitoring systems for measuring the opacity of emissions, sulfur dioxide emissions, nitrogen oxides emissions, and either oxygen or carbon dioxide except as provided in paragraph (b) of this section.

(b) Certain of the continuous monitoring system requirements under paragraph (a) of this section do not apply to owners or operators under the following conditions:

(1) For a fossil fuel-fired steam generator that burns only gaseous fossil fuel, continuous monitoring systems for measuring the opacity of emissions and sulfur dioxide emissions are not required.

(2) For a fossil fuel-fired steam generator that does not use a flue gas desulfurization device, a continuous monitoring system for measuring sulfur dioxide emissions is not required if the owner or operator monitors sulfur dioxide emissions by fuel sampling and analysis under paragraph (d) of this section.

(3) Notwithstanding § 60.13(b), installation of a continuous monitoring system for nitrogen oxides may be delayed until after the initial performance tests under § 60.8 have been conducted. If the owner or operator demonstrates during the performance test that emissions of nitrogen oxides are less than 70 percent of the applicable standards in § 60.44, a continuous monitoring system for measuring nitrogen oxides emissions is not required. If the initial performance test results show that nitrogen oxide emissions are greater than 70 percent of the applicable standard, the owner or operator shall install a continuous monitoring system for nitrogen oxides within one year after the date of the initial performance tests under § 60.8 and comply with all other applicable monitoring requirements under this part.

(4) If an owner or operator does not install any continuous monitoring systems for sulfur oxides and nitrogen oxides, as provided under paragraphs (b)(1) and (b)(3) or paragraphs (b)(2) and (b)(3) of this section a continuous monitoring system for measuring either oxygen or carbon dioxide is not required.

(c) For performance evaluations under § 60.13(c) and calibration checks under § 60.13(d), the following procedures shall be used:

(1) Reference Methods 6 or 7, as applicable, shall be used for conducting performance evaluations of sulfur dioxide and nitrogen oxides continuous monitoring systems.

(2) Sulfur dioxide or nitric oxide, as applicable, shall be used for preparing calibration gas mixtures under Performance Specification 2 of Appendix B to this part.

(3) For affected facilities burning fossil fuel(s), the span value for a continuous monitoring system measuring the opacity of emissions shall be 80, 90, or 100 percent and for a continuous monitoring system measuring sulfur oxides or nitrogen oxides the span value shall be determined as follows:

[In parts per million]

| Fossil fuel | Span value for sulfur dioxide | Span value for nitrogen oxides |
|---|---|---|
| Gas | (1) | 500 |
| Liquid | 1,000 | 500 |
| Solid | 1,500 | 500 |
| Combinations | $1{,}000y+1{,}500z$ | $500(x+y)+1{,}000z$ |

(1) Not applicable.

where

x = the fraction of total heat input derived from gaseous fossil fuel, and

y = the fraction of total heat input derived from liquid fossil fuel, and

z = the fraction of total heat input derived from solid fossil fuel.

(4) All span values computed under paragraph (c)(3) of this section for burning combinations of fossil fuels shall be rounded to the nearest 500 ppm.

(5) For a fossil fuel-fired steam generator that simultaneously burns fossil fuel and nonfossil fuel, the span value of all continuous monitoring systems shall be subject to the Administrator's approval.

(d) [Reserved]

(e) For any continuous monitoring system installed under paragraph (a) of this section, the following conversion procedures shall be used to convert the continuous monitoring data into units of the applicable standards (ng/J, lb/million Btu):

(1) When a continuous monitoring system for measuring oxygen is selected, the measurement of the pollutant concentration and oxygen concentration shall each be on a consistent basis (wet or dry). Alternative procedures approved by the Administrator shall be used when measurements are on a wet basis. When measurements are on a dry basis, the following conversion procedure shall be used:

$$E = CF\left[\frac{20.9}{20.9 - \text{percent } O_2}\right]$$

where:

E, C, F, and $\%O_2$ are determined under paragraph (f) of this section.

(2) When a continuous monitoring system for measuring carbon dioxide is selected, the measurement of the pollutant concentration and carbon dioxide concentration shall each be on a consistent basis (wet or dry) and the following conversion procedure shall be used:

$$E = CF_c\left[\frac{100}{\text{percent } CO_2}\right]$$

where:

E, C, F, and $\%CO_2$ are determined under paragraph (f) of this section.

## Appendix B—Performance Specifications

3. Performance Specification 1 is amended by revising paragraph 6.2 as follows:

* * * * *

6. * * *

6.2 Conformance with the requirements of section 6.1 may be demonstrated by the owner or operator of the affected facility by testing each analyzer or by obtaining a certificate of conformance from the instrument manufacturer. The certificate must certify that at least one analyzer from each month's production was tested and satisfactorily met all applicable requirements. The certificate must state that the first analyzer randomly sampled met all requirements of paragraph 6 of this specification. If any of the requirements were not met, the certificate must show that the entire month's analyzer production was resampled according to the military standard 105D sampling procedure (MIL-STD-105D) inspection level II; was retested for each of the applicable requirements under paragraph 6 of this specification; and was determined to be acceptable under MIL-STD-105D procedures. The certificate of conformance must show the results of each test performed for the analyzers sampled during the month the analyzer being installed was produced.

* * * * *

4. Performance Specification 2 is amended by revising Figure 2-3 as follows:

| Test No. | Date and Time | Reference Method Samples: $SO_2$ Sample 1 (ppm) | $NO_x$ Sample 1 (ppm) | $NO_x$ Sample 2 (ppm) | $NO_x$ Sample 3 (ppm) | $NO_x$ Sample Average (ppm) | Analyzer 1-Hour Average (ppm)* $SO_2$ | Analyzer 1-Hour Average (ppm)* $NO_x$ | Difference (ppm) $SO_2$ | Difference (ppm) $NO_x$ |
|---|---|---|---|---|---|---|---|---|---|---|
| 1 | | | | | | | | | | |
| 2 | | | | | | | | | | |
| 3 | | | | | | | | | | |
| 4 | | | | | | | | | | |
| 5 | | | | | | | | | | |
| 6 | | | | | | | | | | |
| 7 | | | | | | | | | | |
| 8 | | | | | | | | | | |
| 9 | | | | | | | | | | |

Mean reference method test value ($SO_2$) _____ Mean reference method test value ($NO_x$) _____ Mean of the differences _____

95% Confidence intervals = ± _____ ppm ($SO_2$) = ± _____ ppm ($NO_x$)

Accuracies = $\frac{\text{Mean of the differences} + 95\% \text{ confidence interval}}{\text{Mean reference method value}} \times 100$ = ____% ($SO_2$) = ____% ($NO_x$)

* Explain and report method used to determine integrated averages

Figure 2-3 Accuracy Determination ($SO_2$ and $NO_x$)

(Secs. 111, 114, 301(a), Clean Air Act, as amended, Pub. L. 91-604, 84 Stat. 1678 (42 U.S.C. 1857c-6, 1857-9, 1857g(a)))

[FR Doc.77-2744 Filed 1-28-77;8:45 am]

Title 40—Protection of Environment

CHAPTER I—ENVIRONMENTAL PROTECTION AGENCY

[FRL 715-8]

## PART 60—STANDARDS OF PERFORMANCE FOR NEW STATIONARY SOURCES

### Compliance With Standards and Maintenance Requirements

AGENCY: Environmental Protection Agency.

ACTION: Final rule.

SUMMARY: This action amends the general provisions of the standards of performance to allow methods other than Reference Method 9 to be used as a means of measuring plume opacity. The Environmental Protection Agency (EPA) is investigating a remote sensing laser radar system of measuring plume opacity and believes it could be considered as an alternative method to Reference Method 9. This amendment would allow EPA to propose such systems as alternative methods in the future.

EFFECTIVE DATE: June 22, 1977.

FOR FURTHER INFORMATION CONTACT:

Don R. Goodwin, Emission Standards and Engineering Division, Environmental Protection Agency, Research Triangle Park, North Carolina 27711, telephone no. 919-688-8146, ext. 271.

SUPPLEMENTARY INFORMATION: As originally expressed, 40 CFR 60.11(b) permitted the use of Reference Method 9 exclusively for determining whether a source complied with an applicable opacity standard. By this action, EPA amends § 60.11(b) so that alternative methods approved by the Administrator may be used to determine opacity.

When § 60.11(b) was originally promulgated, the visible emissions (Method 9) technique of determining plume opacity with trained visible emission observers was the only expedient and accurate method available to enforcement personnel. Recently, EPA funded the development of a remote sensing laser radar system (LIDAR) that appears to produce results adequate for determination of compliance with opacity standards. EPA is currently evaluating the equipment and is considering proposing its use as an alternative technique of measuring plume opacity.

This amendment will allow EPA to consider use of the LIDAR method of determining plume opacity and, if appropriate, to approve this method for enforcement of opacity regulations. If this method appears to be a suitable alternative to Method 9, it will be proposed in the FEDERAL REGISTER for public comment. After considering comments, EPA will determine if the new method will be an acceptable means of determining opacity compliance.

(Secs. 111, 114, 301(a), Clean Air Act. sec 4(a) of Pub. L. 91-604, 84 Stat. 1683; sec. 4(a) of Pub L. 91-604, 84 Stat. 1687; sec. 2 of Pub. L. No. 90-148, 81 Stat. 504 (42 U.S.C. 1857c-6, 1857c-9 and 1857g(a)).)

NOTE.—Economic Impact Analysis: The Environmental Protection Agency has determined that this action does not contain a major proposal requiring preparation of an Economic Impact Analysis under Executive Orders 11821 and 11949 and OMB Circular A-107.

Dated: May 10, 1977.

DOUGLAS M. COSTLE,
*Administrator.*

Part 60 of Chapter I, Title 40 of the Code of Federal Regulations is amended as follows:

1. Section 60.11 is amended by revising paragraph (b) as follows:

**§ 60.11 Compliance with standards and maintenance requirements.**

* * * * *

(b) Compliance with opacity standards in this part shall be determined by conducting observations in accordance with Reference Method 9 in Appendix A of this part or any alternative method that is approved by the Administrator. Opacity readings of portions of plumes which contain condensed, uncombined water vapor shall not be used for purposes of determining compliance with opacity standards. The results of continuous monitoring by transmissometer which indicate that the opacity at the time visual observations were made was not in excess of the standard are probative but not conclusive evidence of the actual opacity of an emission, provided that the source shall meet the burden of proving that the instrument used meets (at the time of the alleged violation) Performance Specification 1 in Appendix B of this part, has been properly maintained and (at the time of the alleged violation) calibrated, and that the resulting data have not been tampered with in any way.

* * * * *

(Secs. 111, 114, 301(a), Clean Air Act, Sec. 4 (a) of Pub. L. 91-604, 84 Stat. 1683; sec. 4(a) of Pub. L. 91-604, 84 Stat. 1687; sec. 2 of Pub. L. No. 90-148 81 Stat. 504 (42 U.S.C. 1857c-6, 1857c-9, 1857g(a)).)

[FR Doc.77-14562 Filed 5-20-77;8:45 am]

federal register

MONDAY, DECEMBER 5, 1977

PART II

# ENVIRONMENTAL PROTECTION AGENCY

■

# OPACITY PROVISIONS FOR FOSSIL-FUEL-FIRED STEAM GENERATORS

## Revision of Format and Reporting Requirements

[ 6560-01 ]

Title 40—Protection of Environment

CHAPTER I—ENVIRONMENTAL PROTECTION AGENCY

SUBCHAPTER C—AIR PROGRAMS

[FRL 803-8]

## PART 60—STANDARDS OF PERFORMANCE FOR NEW STATIONARY SOURCES

### Opacity Provisions for Fossil-Fuel-Fired Steam Generators

AGENCY: Environmental Protection Agency (EPA).

ACTION: Final rule.

SUMMARY: This rule revises the format of the opacity standard and establishes reporting requirements for excess emissions of opacity for fossil-fuel-fired steam generators. This action is needed to make the standard and reporting requirements conform to changes in the Reference Method for determining opacity which were promulgated on November 12, 1974, (39 FR 39872). The intended effect is to limit opacity of emissions in order to insure proper operation and maintenance of facilities subject to standards of performance.

EFFECTIVE DATE: This rule is effective on December 5, 1977.

ADDRESSES: A summary of the public comments received on the September 10, 1975 (40 FR 42028), proposed rule with EPA's responses is available for public inspection and copying at the EPA Public Information Reference Unit (EPA Library), room 2922, 401 M Street SW., Washington, D.C. 20460. In addition, copies of the comment summary may be obtained by writing to the EPA Public Information Center (PM-215), Washington, D.C. 20460 (specify: "Public Comment Summary: Steam Generator Opacity Exception (40 FR 42028)").

FOR FURTHER INFORMATION CONTACT:

Don R. Goodwin, Director, Emission Standards and Engineering Division (MD-13), Environmental Protection Agency, Research Triangle Park, N.C. 27711, telephone: 919-541-5271.

SUPPLEMENTARY INFORMATION: The standards of performance for fossil-fuel-fired steam generators as promulgated under Subpart D of Part 60 in December 23, 1971, (36 FR 24876) allow emissions up to 20 percent opacity, except 40 percent is allowed for two minutes in any hour. On October 15, 1973, (38 FR 28564) a provision was added to Subpart D which required reporting as excess emissions all hourly periods during which there were three or more one-minute periods when average opacity exceeds 20 percent. Changes to the opacity provisions of Subpart A, General Provisions, and to Reference Method 9, Visual Determination of the Opacity of Emissions from Stationary Sources, were promulgated on November 12, 1974 (39 FR 39872). Among these changes is a requirement that opacity be determined by averaging 24 readings taken at 15-second intervals. Because of this change, the Agency reassessed the opacity standard originally promulgated under Subpart D, and on September 10, 1975, proposed amendments to the opacity standard and reporting requirements. Specifically, these amendments would have deleted the permissible exemption (two minutes per hour of emissions of 40 percent opacity) for gaseous and solid fossil fuels.

The proposed amendment to the opacity provisions was based on a review of available data particularly with respect to the challenge to the opacity standards for coal-fired steam generators (*Essex Chemical Corp. et al.* v. *Ruckelshaus, Appalachian Power Co., et al.* vs. *EPA*, 486 F.2d 427, September 10, 1973). Information available at that time indicated that the two-minute exception allowed under § 60.42(a)(2) was unnecessary for large steam generators fired with solid and gaseous fossil fuels.

Interested parties were invited to submit comments. A total of 10 interested parties, including State agencies, electric utility firms, and industrial firms submitted comments. Following a review of the proposed amendments and consideration of the comments, the amendments have been revised and are being promulgated today.

While no information was submitted to show that the exception is needed for large utility steam generators equipped with conventional "cold side" electrostatic precipitators or with scrubbers or fabric filters, commenters contended that the two-minute exception is needed for industrial boilers and for all units equipped with so-called "hot side" electrostatic precipitators, (i.e., precipitators installed upstream of the air heater where temperatures are 590K to 700K). For industrial boilers in the size range of 73 to 220 MW ($250 \times 10^6$ to $750 \times 10^6$ BTU per hour) heat input, commenters stated that the frequency of soot blowing would have to be increased significantly over present practices if the exception were deleted. More frequent soot blowing would increase costs and energy requirements considerably without any decrease in particulate emissions. Operators of "hot side" precipitators pointed out that where hot side precipitators are used, soot-blowing opacity exceptions are necessary to allow cleaning of the air heater. They noted that since the air heaters are downstream of "hot side" precipitators, any particulate which is removed by soot-blowing will be released with exhaust gases and will contribute to opacity.

EPA has concluded that for steam generators designed for compliance with the particulate matter standard of performance, there are legitimate reasons for providing a limited exception to the opacity standard, and thus, while the format of the opacity standard is revised, the opacity exemption for coal-fired units is retained. The exception could be deleted for gaseous fossil fuel, but since opacity is not a problem from gas-fired units, there is no need to further complicate the regulation by deleting the exception for gas. The two-minute exception could be deleted for very large coal-fired units (>220 MW heat input) that are not equipped with hot side precipitators, but again the deletion would have little effect and would needlessly complicate the regulation.

Section 60.42(a)(2) is amended by expressing the two-minute 40 percent opacity exception in terms of a six-minute 27 percent average opacity (a weighted average of two minutes at 40 percent opacity and four minutes at 20 percent opacity) for consistency with Reference Method 9. This change does not alter the stringency of the standard. In addition, § 60.45(g)(1) which was reserved on October 6, 1975, (40 FR 46250) pending resolution of the opacity exception, is added to require reporting as excess emissions any six-minute period during which the average opacity of emissions exceeds 20 percent opacity, except for the one permissible six-minute period per hour of up to 27 percent opacity.

NOTE.—The Environmental Protection Agency has determined that this document does not contain a major proposal requiring preparation of an Economic Impact Analysis under Executive Orders 11821 and 11949 and OMB Circular A-107.

Dated: November 23, 1977.

DOUGLAS M. COSTLE,
*Administrator.*

Part 60 of Chapter I, Title 40 of the Code of Federal Regulations is amended as follows:

1. Section 60.42(a)(2) is revised as follows:

**§ 60.42 Standard for particulate matter.**

(a) * * *

(2) Exhibit greater than 20 percent opacity except for one six-minute period per hour of not more than 27 percent opacity.

(Sec. 111, 301(a), Clean Air Act as amended (42 U.S.C. 7411, 7601).)

2. Section 60.45(g)(1) is added as follows:

**§ 60.45 Emission and fuel monitoring.**

* * * * *

(g) * * *

(1) *Opacity.* Excess emissions are defined as any six-minute period during which the average opacity of emissions exceeds 20 percent opacity, except that one six-minute average per hour of up to 27 percent opacity need not be reported.

(Sec. 111, 114, 301(a), Clean Air Act as amended (42 U.S.C. 7411, 7414, 7601).)

[FR Doc.77-34641 Filed 12-2-77;8:45 am]

**ENVIRONMENTAL PROTECTION AGENCY**

**40 CFR Part 761**

**[FRL 1075-2]**

## Polychlorinated Biphenyls (PCBs) Manufacturing, Processing, Distribution in Commerce, and Use Prohibitions

**AGENCY:** Environmental Protection Agency.

**ACTION:** Final rule.

**SUMMARY:** This final rule implements provisions of the toxic Substances Control Act (TSCA) prohibiting the manufacture, processing, distribution in commerce, and use of polychlorinated biphenyls (PCBs). Specifically, this rule:

(1) Prohibits all manufacturing of PCBs after July 2, 1979 unless specifically exempted by the Environmental Protection Agency (EPA);

(2) Prohibits the processing, distribution in commerce, and use of PCBs except in a totally enclosed manner after July 2, 1979;

(3) Authorizes certain processing, distribution in commerce, and use of PCBs in a non-totally enclosed manner (which would otherwise be subject to the prohibition described above);

(4) Prohibits all processing and distribution in commerce of PCBs after July 1, 1979, unless specifically exempted by EPA.

**EFFECTIVE DATE:** July 2, 1979. The disposal and marking rule (43 FR 7150, February 17, 1978, as amended by 43 FR 33918 August 2, 1978) shall remain in effect until the rule promulgated today becomes effective.

**FOR FURTHER INFORMATION CONTACT:** For information concerning this rule and for copies of this rule contact: John Ritch, Jr., Director, Office of Industry Assistance, Office of Toxic Substances (TS-799), Environmental Protection Agency, 401 M Street, S.W., Washington, D.C. 20460. Call the toll-free number (800)-424-9065, or in Washington, D.C. call 554-1404.

The support documentation for this rule can also be obtained through the above-mentioned address. The support documentation consists of two parts and are entitled *Support Document/ Voluntary Environmental Impact Statement* and *PCB Manufacturing, Processing, Distribution in Commerce Ban Regulation: Economic Impact Analysis.* (This *Economic Impact Analysis* is hereinafter referred to as the Versar Report). These two documents have been reproduced and bound into one publication.

**SUPPLEMENTARY INFORMATION:**

### Format of Rule

In order to clarify the relationship between the PCB Disposal and Marking Rule and the PCB Ban Rule, all of Part 761 is printed in this notice in a fully integrated form. This notice incorporates the Disposal and Marking Rule (43 FR 7150, February 17, 1978) for PCBs and the technical amendments (43 FR 33918, August 2, 1978) to that Rule into one regulation. Therefore, this notice supercedes the previous notices on July 2, 1979.

### Background

Section 6(e) of TSCA requires EPA to control the manufacture, processing, distribution in commerce, use, disposal, and marking of polychlorinated biphenyls (PCBs). On February 17, 1978, EPA published the PCB Disposal and Marking Rule in the **Federal Register** (43 FR 7150). Clarifying amendments to this rule were published on August 2, 1978 (43 FR 33918).

Section 6(e)(2) provides that no person may manufacture, process, distribute in commerce, or use any PCB in a manner other than in a "totally enclosed manner" after January 1, 1978, except to the extent EPA authorizes activities in a non-totally enclosed manner. On December 30, 1977, EPA published a notice (42 FR 65264) stating that implementation of the January 1, 1978 ban would be postponed until 30 days after promulgation of this rule.

Section 6(e)(3) provides that no person may manufacture any PCB after January 1, 1979, or process or distribute in commerce any PCB after July 1, 1979, except to the extent that EPA specifically exempts such activities. Implementation of the January 1, 1979 ban was postponed until 30 days after the promulgation of the rule published today (See 44 FR 108, January 2, 1979).

Section 6(e)(3)(B) provides that persons may petition the Administrator for exemptions from the prohibition of the manufacture of PCBs, which goes into effect July 2, 1979 or from the prohibition of processing and distribution in commerce, which goes into effect July 1, 1979. Interim rules establishing procedures for submitting petitions for exemptions from the manufacturing prohibition were published November 1, 1978 (43 FR 50905). More than 70 petitions for exemptions have been received. On January 2, 1979, EPA announced (44 FR 108) that it would not enforce the PCB manufacturing and importation ban of section 6(e)(3)(A) against persons who had submitted petitions until EPA has acted on their exemption petition. This nonenforcement policy applies solely to activities that are properly subject to a pending PCB manufacturing or importation exemption petition.

Elsewhere in today's **Federal Register**, EPA has published a Notice of Proposed Rulemaking that identifies each petition received for exemptions from the manufacturing prohibition and, in most cases, the action that EPA proposes to take on individual petitions. Rules establishing procedures for submitting petitions for exemptions from the processing and distribution in commerce prohibitions will be published in the near future.

Authority to grant or deny petitions for exemptions from the PCB processing and distribution in commerce bans under section 6(e)(3)(B) of TSCA, as well as the authority to revise the procedural rules for PCB exemptions and to grant further PCB authorizations and to amend or modify this regulation is delegated to the Assistant Administrator for Toxic Substances. This authority was previously delegated to the Assistant Administrator for Toxic Substances for the PCB manufacturing exemptions (see 43 FR 50905).

This final rule implementing sections 6(e) (2) and (3) of TSCA was proposed June 7, 1978 (43 FR 24802). Ten days of public hearings were held in Washington, D.C., from August 21 to September 1. Over 50 oral presentations were made and two hearing participants conducted cross-examination on September 26, 1978. On September 22, 1978 (43 FR 43048), EPA published a notice of the opportunity for cross-examination and extended the reply comment period to October 10, 1978. EPA received over 200 comments on the proposed rule.

EPA has produced, as part of the rulemaking process for PCBs, two support documents. The first support document which was entitled *Support Document/Voluntary Draft Environmental Impact Statement*, was made available at the time the proposed rule was published and discussed the health and environmental effects of PCBs, the substitutes for PCBs, and the regulatory alternatives EPA considered in developing the proposed PCB Ban Rule. The second support document entitled *Support Document/Voluntary Environmental Impact Statement* was prepared along with the final PCB Rule and Preamble. This particular document contains updated versions of the health and environmental effects and PCB substitutes sections, and addresses the

major comments that were made on the proposed rule during the comment period. In many cases these comments led to changes to the proposed PCB Ban Rule. There are also two versions of the economic impact analysis that have been prepared by Versar, Inc. The first Versar Report was made available at the time of the proposed PCB Ban Rule. The second, or final Versar Report, has been incorporated into the final Support Document. Copies of the final Support Document can be obtained from the Industry Assistance Office identified above.

**Table 1—Contents of Preamble**


I. Summary of the Rule's Organization
II. Changes in Major Definitions
A. "PCB" and "PCB Items"
B. Regulation of PCBs at the 50 ppm Concentration Level
C. Classification of Transformers Under This Rule
1. PCB Transformers
2. PCB-Contaminated Transformers
3. Non-PCB Transformers
4. Discussion of Transformer Categories
a. Determining Appropriate Categories
b. Significance of Transformer Categories
D. Totally Enclosed Manner and Significant Exposure
E. Sale for Purposes Other Than Resale
F. Other Definitions.
III. Changes in Subpart B: Disposal of PCBs and PCB Items
A. Mineral Oil Dielectric Fluid with 50 to 500 ppm PCB
1. High Efficiency Boilers
2. Conditions for Boilers
3. Other Disposal Alternatives
B. Other Liquid Wastes with 50 to 500 ppm PCB
C. Disposal of 50 to 500 ppm PCB Liquids in Chemical Waste Landfills
D. Disposal of Non-Liquid PCBs in Chemical Waste Landfills
E. Batch Testing of Mineral Oil Dielectric Fluid
F. Other Changes in the Disposal Requirements
IV. Changes in Subpart C: Marking of PCBs and PCB Items
V. Changes in Subpart E: Annexes
A. Annex I: Incineration
B. Annex II: Chemical Waste Landfills
C. Annex III: Storage
1. Container Specifications
2. Bulk Storage
3. Spill Prevention Procedures
4. Flood Protection
5. Temporary Storage
a. Revisions
b. Action on Petitions to Amend Rule on Temporary Storage Requirements
D. Annex IV: Decontamination
E. Annex VI: Records and Monitoring
VI. Subpart D: Manufacturing, Processing, Distribution in Commerce, and Use Bans
A. Prohibitions
1. Waste Oil Bans
B. Changes in § 761.30: Prohibitions
1. Change in Scope of Manufacturing Ban
a. "Manufacturing" versus "Processing" of PCB Items
b. Manufacture and Import of PCB Items
2. Import and Export of PCBs and PCB Items for Disposal
C. Other Issues
1. PCB Impurities and Byproducts
2. Disposal of Small PCB Capacitors
3. State Preemptions
VII. Relationship of § 6(e)(2) to § 6(e)(3) in TSCA
VIII. Authorizations and Exemptions
A. Explanation of Authorizations and Exemptions
1. Manufacturing Exemptions
2. Processing and Distribution in Commerce Exemptions
B. General Changes in § 761.31: Authorizations
1. Reporting and Recordkeeping Requirements
2. Length of Use Authorizations
3. Changes in § 761.46: Annex VII
IX. Specific Authorizations
A. Servicing Transformers (Other Than Railroad Transformers)
1. General Discussion of Transformer Servicing
2. PCB Transformers
3. PCB-Contaminated Transformers
4. Rebuilding PCB Transformers
5. Contents of Authorization
B. Use and Servicing of Railroad Transformers
C. Use and Servicing of Mining Equipment
D. Use in Heat Transfer Systems
E. Use in Hydraulic Systems
F. Use in Carbonless Copy Paper
G. Pigments
H. Use and Servicing of Electromagnets
I. Use in Natural Gas Pipeline Compressors
J. Use of Small Quantities for Research and Development
K. Use in Microscopy
X. PCB Activities Not Authorized by this Rule
A. Manufacture of PCB Capacitors
B. Manufacture of PCB Transformers
C. Other PCB Activities
XI. Manufacturing, Processing, and Distribution in Commerce of PCBs for Export
XII. Test Procedures for PCB
XIII. Compliance and Enforcement
XIV. Relationship of PCB Disposal Under TSCA to Hazardous Waste Disposal Under RCRA
XV. Summary of Economic Consequences

**III. Changes in Subpart B: Disposal of PCBs and PCB Items**

*A. Mineral Oil Dielectric Fluid With 50 to 500 ppm PCB*

The proposed rule would have changed the PCB Disposal and Marking Rule by requiring all PCBs containing 50 ppm or more PCB to be disposed of in an incinerator meeting the requirements of Annex I. This requirement would have increased the quantity of liquid to be incinerated over the next 30 to 40 years from 300 million pounds to at least 3 billion pounds, with proportional increases in costs (see the Versar Report). This increase would also have severely strained available incineration capacity. EPA was concerned about the impact of this requirement and requested comments on the use of high temperature boilers for incinerating PCB contaminated mineral oil.

*1. High Efficiency Boilers*

A substantial number of comments stated that power generation facilities could provide an environmentally safe alternative for burning PCB-contaminated mineral oil. EPA reviewed the comments and investigated the feasibility of permitting the use of boilers as a disposal option. After exploring this matter with combustion experts, EPA concluded that there are boilers capable of adequately incinerating PCB-contaminated mineral oil. These boilers (which can be referred to as "high efficiency boilers") include power generation boilers and industrial boilers that operate at a high combustion efficiency (99.9%), as defined by the carbon monoxide concentrations and excess oxygen percentages in the combustion emissions.

These boilers are capable of achieving a PCB destruction efficiency of 99.9% or greater. This destruction efficiency is somewhat lower than the estimated 99.9999% or greater destruction efficiency that an Annex I incinerator can achieve. However, this disposal alternative is restricted to PCB-contaminated mineral oil of low PCB concentration (50–500 ppm) and offers a substantial reduction in disposal costs (over $13 million per year). Given the 99.9% destruction efficiency for PCBs in high efficiency boilers, only 10 more pounds of PCB would enter the environment annually as compared to the amount released from high temperature incinerators under Annex I. (This estimate is derived from Versar data).

After considering these factors, EPA concluded that disposing of PCB-contaminated mineral oil containing 50 to 500 ppm PCB in high efficiency boilers does not present an unreasonable risk to human health or the environment. However, for the reasons explained in section III.B, only PCB-contaminated mineral oil will be permitted to be burned in boilers without specific approval by the appropriate EPA Regional Administrator. A discussion of the burning of other low concentration PCB wastes also is found in section III.B.

*2. Conditions for Boilers*

Based on the conclusions stated above, the final rule permits the burning of PCB-contaminated mineral oil with a concentration below 500 ppm in high efficiency boilers if the following conditions are met: (1) the boiler is rated at a minimum of 50 million BTU/hour; (2) the mineral oil is no more than ten percent of the total fuel feed rate; (3) the mineral oil is not added to the combustion chamber during boiler start-up or shut-down operations; (4) before commencing the burning of PCB-contaminated mineral oil, the owner or operator has conducted tests and determined that the combustion emissions contain at least three percent (3%) excess oxygen and the carbon monoxide concentration does not exceed 50 ppm for oil or gas-fired boilers or 100 ppm for coal-fired boilers; (5) the company has notified the appropriate EPA Regional Administrator at least 30 days before the company uses its high efficiency boiler for this purpose and has supplied the notice with the combustion emissions data as specified in (4) above; (6) the combustion process is monitored either continuously or, for boilers burning less than 30,000 gallons of mineral oil annually, at least once each hour that PCB-contaminated mineral oil is burned, to determine the percentage of excess oxygen and the carbon monoxide level in the combustion emission; (7) the primary fuel and mineral oil feed rates are monitored at least every 15 minutes whenever burning PCB-contaminated mineral oil; (8) the carbon monoxide and excess oxygen levels are checked at least once an hour and, if they fall below the specified levels, the flow of mineral oil to the boiler is immediately stopped; and (9) records are maintained that include the monitoring data in (6) and (7) above and the quantities of PCB-contaminated mineral oil burned each month. When burning mineral oil dielectric fluid, the boiler must operate at a level of output no less than the output at which the reported carbon monoxide and excess oxygen measurements were taken. The Regional Administrator has to be notified only before the first burning of PCB-contaminated mineral oil in the boiler. The conditions are intended to prevent the introduction of PCBs into boilers when combustion conditions are not optimum for the destruction of PCBs. The level of 30,000 gallons per year was chosen as the cut-off for continuous monitoring because, (1) EPA believes that boilers burning 30,000 gallons or more per year of PCB-contaminated mineral oil would be burning on a regular basis and therefore should continuously monitor CO and excess $O_2$; and (2) a boiler burning this quantity of mineral oil annually will incur more than sufficient savings over high temperature incineration or chemical waste landfill disposal costs to offset the added costs of continuous monitoring. However, a person whose boiler does not meet these requirements but who can demonstrate that the boiler will destroy PCBs as efficiently as a high efficiency boiler may seek specific approval from the appropriate EPA Regional Administrator under § 761.10(a)(2)(iv).

EPA plans to monitor the use of these boilers closely and will carefully analyze the effectiveness of this disposal option.

*3. Other Disposal Alternatives*

Alternatively, any PCB-contaminated mineral oil dielectric fluid (with a PCB concentration less than 500 ppm) may be disposed of either in an incinerator complying with Annex I or, under special conditions (see section III.C below), in a chemical waste landfill complying with Annex II. These landfills will provide a disposal option less costly than Annex I incineration for owners or users of PCB-contaminated mineral oil who do not have access to high efficiency boilers. EPA believes that only small quantities of dielectric fluid will be disposed of in landfills because high efficiency boilers or incinerators will be available for most of the waste fluids.

The impact on human health and the environment from disposing of these wastes in chemical waste landfills is discussed in the preamble section III.B below.

*B. Other Liquid Wastes With 50 to 500 ppm PCB*

To provide thermal destruction alternatives for other low concentration liquid wastes containing less than 500 ppm PCB, EPA has included in the rule a

procedure that is comparable to the disposal alternatives for PCB-contaminated mineral oil. This procedure permits the disposal of these non-mineral oil fluids on a case-by-case basis in high efficiency boilers.

Such approval can be granted if: (1) the boiler is rated at a minimum of 50 million BTU/hour; (2) the PCB-contaminated waste comprises no more than ten percent (10%) of the total volume of fuel; (3) the waste will not be added to the combustion chamber during boiler start-up or shut-down operations; (4) the combustion emissions will contain at least three percent (3%) excess oxygen and the carbon monoxide concentration will be less than 50 ppm for oil or gas-fired boilers or 100 ppm for coal-fired boilers; (5) the combustion process will be monitored continuously or at least once each hour that the PCB-contaminated wastes are being burned to determine the percentage of excess oxygen and the carbon monoxide level in the combustion emissions; (6) the primary fuel and waste feed rates are monitored at least every 15 minutes whenever burning the waste; (7) the carbon monoxide and excess oxygen levels are monitored at least once an hour and if they fall below the levels specified, the flow of wastes to the boiler is stopped immediately; and (8) records are maintained that include the monitoring data in (5) and (6) above and the quantities of PCB-contaminated waste burned each month. When burning PCB wastes, the boiler must operate at a level of output no less than the output at which the reported carbon monoxide and excess oxygen measurements were taken. These requirements are similar to those for high efficiency boilers used to burn PCB-contaminated mineral oil.

Persons seeking approval to use this disposal alternative must submit an application to the appropriate EPA Regional Administrator. The application must contain information describing the quantity of waste expected to be disposed of each month, descriptive information about the waste including the concentrations of PCBs and other chlorinated hydrocarbons, the results of a number of standard fuel analyses to determine the nature of the waste, BTU heat value and flash point of the wastes, and an explanation of the procedures to be followed to insure that burning the waste in the boiler will not adversely affect the operation of the boiler such that the combustion efficiency will decrease. The information contained in the applications will help the Regional Administrator to assess whether these high efficiency boilers will adequately destroy these low concentration PCB wastes.

The cost of this alternative is greater than the mineral oil disposal alternative because approval application costs and analytical costs are greater. However, these costs will be less than the cost for Annex I incineration or Annex II chemical waste landfills. As a result, the quantity of low concentration PCB wastes going to Annex I and Annex II facilities should be reduced. In addition, a person whose boiler does not meet these requirements but who can demonstrate that the boiler will destroy PCBs as efficiently as a high efficiency boiler may seek specific approval from the appropriate EPA Regional Administrator under § 761.10(a)(3)(iv).

These wastes are treated differently than PCB-contaminated mineral oil dielectric fluid because they tend to be more varied in composition than contaminated mineral oil. In many cases, these fluids are fire or heat resistant and could reduce PCB destruction efficiency. For example, unlike mineral oil, PCB-contaminated hydraulic fluid will require the addition of *more* primary fuel for it to burn in the manner necessary to destroy the PCBs.

## V. Changes in Subpart E: Annexes

### *A. Annex I: Incineration*

Section 761.40(a)(2) establishes a new value of 99.9% for the combustion efficiency required of incinerators. This is a correction of the earlier value of 99% efficiency that was specified in the Disposal and Marking Rule. Specifically, incinerators operating at the temperatures, dwell times, and excess oxygen concentrations specified in Annex I normally operate at a combustion efficiency of 99.9% or greater. A combustion efficiency of 99.9% thus more accurately represents the true combustion efficiency of Annex I incinerators. All incinerators that have been approved or that are under consideration for approval by EPA are capable of operating at 99.9% combustion efficiency; accordingly, this modification should not disqualify these incinerators or result in additional operating expenses for these facilities. (This change does not mean that those incinerators already approved will be required to reapply for approval to operate.) Combustion efficiency is an effective parameter for evaluating the degree of destruction that occurs in an incinerator, and it is essential that the required value for this parameter accurately reflect expected combustion conditions.

A change has been made to the $CO_2$ monitoring requirement of § 761.40(a)(7). The Disposal and Marking Rule required continuous monitoring of the $CO_2$ concentration in the stack gas of the incinerator. The rule has been changed to require periodic $CO_2$ monitoring as specified by the Regional Administrator. This change was made for two reasons: (1) the high cost of the equipment needed to continuously monitor $CO_2$; and (2) the insensitivity of the combustion efficiency calculation to variations in the $CO_2$ concentration.

The automatic shutoff of waste flow that was required by the Disposal and Marking Rule when certain operating deficiencies occurred has been modified. Owners or operators of an incinerator may submit to the Regional Administrator, when they apply for the approval to incinerate PCBs, a contingency plan outlining the corrective steps they will take when operating problems occur. This change provides for greater flexibility for incinerator operators and will result in no increased human or environmental exposure since the contingency plans will be examined on a case-by-case basis by the Regional Administrator for proper safeguards before approval.

A new paragraph, § 761.40(d)(8), has been added to clarify the responsibility of the owner or operator of an approved facility when the ownership of the facility is transferred.

### *B. Annex II: Chemical Waste Landfills*

Section 761.41(b) specifies requirements for operational plans for chemical waste landfills. These requirements have been modified to require delineation of the procedures to be used for the disposal of liquids containing between 50 ppm and 500 ppm PCB. After EPA approves an operational plan, the affected landfill operator must follow those procedures in disposing of PCB wastes.

Section 761.41(b)(3) specifies that the bottom of a chemical waste landfill must be at least fifty feet above the historical high water table. Because the distance between the bottom of the chemical waste landfill and the water table in many areas east of the Mississippi River is far less than fifty feet, EPA Regional Administrators have had to waive this criterion in several situations. While the criterion in the final rule is unchanged from the Disposal and Marking Rule, EPA is proposing a modification of this provision in a separate notice of proposed rulemaking.

The provisions in Annex II of the Disposal and Marking Rule establishing monitoring requirements for surface water (§ 761.41(b)(6)(i)) have been modified to allow the Regional Administrator to designate the surface watercourses that are to be sampled. This minor change eliminates any uncertainty about which watercourses are to be sampled.

Section 761.41(b)(7) includes provisions for leachate collection in chemical waste landfills. The Disposal and Marking Rule specified that the collection system be located under the landfill liner system. The final rule corrects this provision and specifies that the collection system be above the landfill liner system. Collection systems are placed above the liner to capture liquids to protect and reduce hydraulic pressure on the liner system. All chemical waste landfills currently in use have collection systems above the liner.

A new paragraph, § 761.41(c)(7), has been added to clarify the responsibility of the owner or operator of an approved facility when the ownership of the facility is transferred.

## Subpart B—Disposal of PCBs and PCB Items

Note.—This Subpart does not require removal of PCBs and PCB Items from service and disposal earlier than would normally be the case. However, when PCBs and PCB Items are removed from service and disposed of, disposal must be undertaken in accordance with these regulations. PCBs (including soils and debris) and PCB Items which have been placed in a disposal site are considered to be "in service" for purposes of the applicability of this Subpart. This Subpart does not require PCBs and PCB Items landfilled prior to February 17, 1978 to be removed for disposal. However, if such PCBs or PCB Items are removed from the disposal site, they must be disposed of in accordance with this Subpart. Other Subparts are directed to the manufacture, processing, distribution in commerce, and use of PCBs and may result in some cases in disposal at an earlier date than would otherwise occur.

### § 761.10 Disposal requirements.

(a) *PCBs.* (1) Except as provided in subparagraphs (2), (3), (4), and (5) of this paragraph, PCBs must be disposed of in an incinerator which complies with Annex I.

(2) Mineral oil dielectric fluid from PCB-Contaminated Transformers containing a PCB concentration of 50 ppm or greater, but less than 500 ppm, must be disposed of in one of the following:

(i) In an incinerator that complies with Annex I § 761.40;

(ii) In a chemical waste landfill that complies with Annex II § 761.41 if information is provided to the owner or operator of the chemical waste landfill that shows that the mineral oil dielectric fluid does not exceed 500 ppm PCB and is not an ignitable waste as described in § 761.41 (b) (8) (iii) of Annex II;

(iii) In a high efficiency boiler provided that:

(A) The boiler complies with the following criteria:

(*1*) The boiler is rated at a minimum of 50 million BTU hours;

(*2*) If the boiler uses natural gas or oil as the primary fuel, the carbon monoxide concentration in the stack is 50 ppm or less and the excess oxygen is at least three (3) percent when PCBs are being burned;

(*3*) If the boiler uses coal as the primary fuel, the carbon monoxide concentration in the stack is 100 ppm or less and the excess oxygen is at least three (3) percent when PCBs are being burned;

(*4*) The mineral oil dielectric fluid does not comprise more than ten (10) percent (on a volume basis) of the total fuel feed rate;

(*5*) The mineral oil dielectric fluid is not fed into the boiler unless the boiler is operating at its normal operating temperature (this prohibits feeding these fluids during either start up or shut down operations);

(*6*) The owner or operator of the boiler:

(*i*) Continuously monitors and records the carbon monoxide concentration and excess oxygen percentage in the stack gas while burning mineral oil dielectric fluid; or

(*ii*) If the boiler will burn less than 30,000 gallons of mineral oil dielectric fluid per year, measures and records the carbon monoxide concentration and excess oxygen percentage in the stack gas at regular intervals of no longer than 60 minutes while burning mineral oil dielectric fluid.

(*7*) The primary fuel feed rates, mineral oil dielectric fluid feed rates, and total quantities of both primary fuel and mineral oil dielectric fluid fed to the boiler are measured and recorded at regular intervals of no longer than 15 minutes while burning mineral oil dielectric fluid.

(*8*) The carbon monoxide concentration and the excess oxygen percentage are checked at least once every hour that mineral oil dielectric fluid is burned. If either measurement falls below the levels specified in this rule, the flow of mineral oil dielectric fluid to the boiler shall be stopped immediately.

(B) Thirty days before any person burns mineral oil dielectric fluid in the boiler, the person gives written notice to the EPA Regional Administrator for the EPA Region in which the boiler is located and that the notice contains the following information:

(*1*) The name and address of the owner or operator of the boiler and the address of the boiler;

(*2*) The boiler rating in units of BTU/hour;

(*3*) The carbon monoxide concentration and the excess oxygen percentage in the stack of the boiler when it is operated in a manner similar to the manner in which it will be operated when mineral oil dielectric fluid is burned; and

(*4*) The type of equipment, apparatus, and procedures to be used to control the feed of mineral oil dielectric fluid to the boiler and to monitor and record the carbon monoxide concentration and excess oxygen percentage in the stack.

(C) When burning mineral oil dielectric fluid, the boiler must operate at a level of output no less than the output at which the measurements required under subparagraph (B)(*3*) were taken.

(D) Any person burning mineral oil dielectric fluid in a boiler obtains the following information and retains the information for five years at the boiler location:

(*1*) The data required to be collected under subparagraphs (A)(*6*) and (A)(*7*) of this paragraph; and

(*2*) The quantity of mineral oil dielectric fluid burned in the boiler each month;

(iv) In a facility that is approved in accordance with § 761.10(e). For the purpose of burning mineral oil dielectric fluid, an applicant under § 761.10(e) must show that his combustion process destroys PCBs as efficiently as does a high efficiency boiler, as defined in subparagraph (iii), or an Annex I approved incinerator.

(3) Liquids, other than mineral oil dielectric fluid, containing a PCB concentration of 50 ppm or greater, but less than 500 ppm, shall be disposed of:

(i) In an incinerator which complies with Annex I;

(ii) In a chemical waste landfill which complies with Annex II if information is provided to the owner or operator of the chemical waste landfill that shows that the waste does not exceed 500 ppm PCB and is not an ignitable waste as described in § 761.41(b)(8)(iii)of Annex II.

(iii) In a high efficiency boiler provided that:

(A) The boiler complies with the following criteria:

(*1*) The boiler is rated at a minimum of 50 million BTU/hour;

(*2*) If the boiler uses natural gas or oil as the primary fuel, the carbon monoxide concentration in the stack is 50 ppm or less and the excess oxygen is at least three (3) percent when PCBs are being burned;

(*3*) If the boiler uses coal as the primary fuel, the carbon monoxide concentration in the stack is 100 ppm or less and the excess oxygen is at least three (3) percent when PCBs are being burned;

(*4*) The waste does not comprise more than ten (10) percent (on a volume basis) of the total fuel feed rate;

(*5*) The waste is not fed into the boiler unless the boiler is operating at its normal operating temperature (this prohibits feeding these fluids during either start up or shut down operations);

(*6*) The owner or operator of the boiler must:

(*i*) Continuously monitor and record the carbon monoxide concentration and excess oxygen percentage in the stack gas while burning waste fluid; or

(*ii*) If the boiler will burn less than 30,000 gallons of waste fluid per year, measure and record the carbon monoxide concentration and excess oxygen percentage in the stack gas at regular intervals of no longer than 60 minutes while burning waste fluid;

(*7*) The primary fuel feed rate, waste fluid feed rate, and total quantities of both primary fuel and waste fluid fed to the boiler must be measured and recorded at regular intervals of no longer than 15 minutes while burning waste fluid; and

(*8*) The carbon monoxide concentration and the excess oxygen percentage must be checked at least once every hour that the waste is burned. If either measurement falls below the levels specified in this rule, the flow of waste to the boiler shall be stopped immediately.

(B) Prior to any person burning these liquids in the boiler, approval must be obtained from the EPA Regional Administrator for the EPA Region in which the boiler is located and any persons seeking such approval must submit to the EPA Regional Administrator a request containing at least the following information:

(*1*) The name and address of the owner or operator of the boiler and the address of the boiler;

(*2*) The boiler rating in units of BTU/hour;

(*3*) The carbon monoxide concentration and the excess oxygen percentage in the stack of the boiler when it is operated in a manner similar to the manner in which it will be operated when low concentration PCB liquid is burned;

(*4*) The type of equipment, apparatus, and procedures to be used to control the feed of mineral oil dielectric fluid to the boiler and to monitor and record the carbon monoxide concentration and excess oxygen percentage in the stack;

(*5*) The type of waste to be burned (e.g., hydraulic fluid, contaminated fuel oil, heat transfer fluid, etc.);

(*6*) The concentration of PCBs and of any other chlorinated hydrocarbon in the waste and the results of analyses using the American Society of Testing and Materials (ASTM) methods as referenced below: carbon and hydrogen content using ASTM D-3178, nitrogen content using ASTM E-258, sulfur content using ASTM D-2784, D-1266, or D-129, chlorine content using ASTM D-808, water and sediment content using either ASTM D-2709 or D-1796, ash content using D-482, calorific value using ASTM D-240, carbon residue using either ASTM D-2158 or D-524, and flash point using ASTM D-93;

(*7*) The quantity of wastes estimated to be burned in a thirty (30) day period;

(*8*) An explanation of the procedures to be followed to insure that burning the waste will not adversely affect the operation of the boiler such that combustion efficiency will decrease.

(C) On the basis of the information in (B) above and any other available information, the Regional Administrator may, at his discretion, find that the alternate disposal method will not present an unreasonable risk of injury to health or the environment and approve the use of the boiler;

(D) When burning PCB wastes, the boiler must operate at a level of output no less than the output at which the measurements required under subparagraph (B)(*3*) were taken; and

(E) Any person burning liquids in boilers approved as provided in (C) above, must obtain the following information and retain the information for five years at the boiler location:

(*1*) The data required to be collected in subparagraphs (A)(*6*) and (A)(*7*) of this paragraph;

(*2*) The quantity of low concentration PCB liquid burned in the boiler each month.

(*3*) The analysis of the waste required by subparagraph (B)(*6*) of this paragraph taken once a month for each month during which low concentration PCB liquid is burned in the boiler.

(iv) In a facility that is approved in accordance with § 761.10(e). For the purpose of burning liquids, other than mineral oil dielectric fluid, containing 50 ppm or greater PCB, but less than 500 ppm PCB, an applicant under § 761.10(e) must show that his combustion process destroys PCBs as efficiently as does a high efficiency boiler, as defined in § 761.10(a)(2)(iii), or an Annex I incinerator.

(4) Any non-liquid PCBs in the form of contaminated soil, rags, or other debris shall be disposed of:

(i) In an incinerator which complies with Annex I; or

(ii) In a chemical waste landfill which complies with Annex II.

Note: Except as provided in § 761.41(b)(8)(ii), liquid PCBs shall not be processed into non-liquid forms to circumvent the high temperature incineration requirements of § 761.10(a).

(5) All dredged materials and municipal sewage treatment sludges that contain PCBs shall be disposed of:

(i) In an incinerator which complies with Annex I;

(ii) In a chemical waste landfill which complies with Annex II; or

(iii) Upon application, using a disposal method to be approved by the Agency's Regional Administrator in the EPA Region in which the PCBs are located. Applications for disposal in a manner other than prescribed in (i) or (ii) above must be made in writing to the Regional Administrator. The application must contain information that, based on technical, environmental, and economic considerations, indicates that disposal in an incinerator or chemical waste landfill is not reasonable and appropriate, and that the alternate disposal method will provide adequate protection to health and the environment. The Regional Administrator may request other information that he or she believes to be necessary for evaluation of the alternate disposal method. Any approval by the Regional Administrator shall be in writing and may contain any appropriate limitations on the approved alternate method for disposal. In addition to these regulations, the Regional Administrator shall consider other applicable Agency guidelines, criteria, and regulations to ensure that the discharges of dredged material and sludges that contain PCBs and other contaminants are adequately controlled to protect the environment. The person to whom such approval is issued must comply with all limitations contained in the approval.

(6) When storage is desired prior to disposal, PCBs shall be stored in a facility which complies with Annex III.

(b) *PCB Articles.* (1) Transformers.

(i) PCB Transformers shall be disposed of in accordance with either of the following:

(A) In an incinerator that complies with Annex I; or

(B) In a chemical waste landfill which complies with Annex II; provided that the transformer is first drained of all free flowing liquid, filled with solvent, allowed to stand for at least 18 hours, and then drained thoroughly. PCB liquids that are removed shall be disposed of in accordance with paragraph (a) of this section. Solvents may include kerosene, xylene, toluene and other solvents in which PCBs are readily soluble. Precautionary measures should be taken, however, that the solvent flushing procedure is conducted in accordance with applicable safety and health standards as required by Federal or State regulations.

(ii) PCB-Contaminated Transformers shall be disposed of by draining all free flowing liquid from the transformer and disposing of the liquid in accordance

with paragraphs (a)(2) above. The disposal of the drained transformer is not regulated by this rule.

(2) PCB Capacitors. (i) The disposal of any capacitor normally used in alternating current circuits shall comply with all requirements of this subpart unless it is known from label or nameplate information, manufacturer's literature, or chemical analysis that the capacitor does not contain PCBs.

(ii) Any person may dispose of PCB Small Capacitors as municipal solid waste, unless that person is subject to the requirements of subparagraph (iv).

(iii) Any PCB Large High or Low Voltage Capacitor owned by any person shall be disposed of in accordance with either of the following:

(A) Disposal in an incinerator that complies with Annex I; or

(B) Until January 1, 1980, disposal in a chemical waste landfill that complies with Annex II.

(iv) Any PCB Small Capacitor owned by any person who manufactures or at any time manufactured PCB Capacitors or PCB Equipment and acquired the PCB Capacitors in the course of such manufacturing shall be disposed of in accordance with either of the following:

(A) Disposal in an incinerator which complies with Annex I; or

(B) Until January 1, 1980, disposal in a chemical waste landfill which complies with Annex II.

(3) PCB Hydraulic Machines. PCB hydraulic machines such as die casting machines may be disposed of as municipal solid waste or salvage provided that the machines are drained of all free-flowing liquid and the liquid is disposed of in accordance with the provisions of § 761.10(a). If the PCB liquid contains 1000 ppm PCB or greater, then the hydraulic machine must be flushed prior to disposal with a solvent containing less than 50 ppm PCB (see transformer solvents at § 761.10(b)(1)(i)(B)) and the solvent disposed of in accordance with § 761.10(a).

(4) Other PCB Articles must be disposed of:

(i) In an incinerator that complies with Annex I; or

(ii) In a chemical waste landfill that complies with Annex II, provided that all free-flowing liquid PCBs have been thoroughly drained from any articles before the articles are placed in the chemical waste landfill and that the drained liquids are disposed of in an incinerator that complies with Annex I.

(5) Storage of PCB Articles—Except for a PCB Article described in subparagraph (b)(2)(ii) and hydraulic machines that comply with the municipal solid waste disposal provisions described in subparagraph (b)(3), any PCB Article shall be stored in accordance with Annex III prior to disposal.

(c) *PCB Containers.* (1) Unless decontaminated in compliance with Annex IV or as provided in (2) below, a PCB Container shall be disposed of:

(i) In an incinerator which complies with Annex I, or

(ii) In a chemical waste landfill that complies with Annex II; provided that if there are PCBs in a liquid state, the PCB Container shall first be drained and the PCB liquid disposed of in accordance with paragraph (a) of this section.

(2) Any PCB Container used to contain only PCBs at a concentration less than 500 ppm shall be disposed of as municipal solid wastes; provided that if the PCBs are in a liquid state, the PCB Container shall first be drained and the PCB liquid shall be disposed of in accordance with paragraph (a) of this section.

(3) Prior to disposal, a PCB container shall be stored in a facility which complies with Annex III.

(d) *Spills.* (1) Spills and other uncontrolled discharges of PCBs constitute the disposal of PCBs.

(2) PCBs resulting from spill clean-up and removal operations shall be stored and disposed of in accordance with paragraph (a) of this section. In order to determine if a spill of PCBs has resulted in a contamination level that is 50 ppm of PCBs or greater in soil, gravel, sludge, fill, rubble, or other land based substances, the person who spills PCBs should consult with the appropriate EPA Regional Administrator to obtain information on sampling methods and analytical procedures for determining the PCB contamination level associated with the spill.

(3) This paragraph does not exempt any person from any actions or liability under other statutory authorities, including section 311 of the Clean Water Act and the Resource Conservation and Recovery Act.

(e) Any person who is required to incinerate any PCBs and PCB Items under this subpart and who can demonstrate that an alternative method of destroying PCBs and PCB Items exists and that this alternative method can achieve a level of performance equivalent to Annex I incinerators or high efficiency boilers as provided in § 761.10(a)(2)(iv) and § 761.10(a)(3)(iv), may submit a written request to the Regional Administrator for an exemption from the incineration requirements of Annex I. The applicant must show that his method of destroying PCBs will not present an unreasonable risk of injury to health or the environment. On the basis of such information and any available information, the Regional Administrator may, in his discretion, approve the use of the alternate if he finds that the alternate disposal method provides PCB destruction equivalent to disposal in an Annex I incinerator and will not present an unreasonable risk of injury to health or the environment. Any approval must be stated in writing and may contain such conditions and provisions as the Regional Administrator deems appropriate. The person to whom such waiver is issued must comply with all limitations contained in such determination.

(f)(1) Each operator of a chemical waste landfill, incinerator, or alternative to incineration approved under paragraph (e) shall give the following written notices to the state and local governments within whose jurisdiction the disposal facility is located:

(i) Notice at least thirty (30) days before a facility is first used for disposal of PCBs required by these regulations; and

(ii) At the request of any state or local government, annual notice of the quantities and general description of PCBs disposed of during the year. This annual notice shall be given no more than thirty (30) days after the end of the year covered.

(2) Any person who disposes of PCBs under a §761.10(a)(5)(iii) incineration or chemical waste landfilling waiver shall give written notice at least thirty (30) days prior to conducting the disposal activities to the state and local governments within whose jurisdiction the disposal is to take place.

federal register

Monday
June 11, 1979

Part II

# Environmental Protection Agency

## New Stationary Sources Performance Standards; Electric Utility Steam Generating Units

ENVIRONMENTAL PROTECTION AGENCY

40 CFR Part 60

[FRL 1240-7]

## New Stationary Sources Performance Standards; Electric Utility Steam Generating Units

**AGENCY:** Environmental Protection Agency (EPA).

**ACTION:** Final rule.

**SUMMARY:** These standards of performance limit emissions of sulfur dioxide ($SO_2$), particulate matter, and nitrogen oxides ($NO_x$) from new, modified, and reconstructed electric utility steam generating units capable of combusting more than 73 megawatts (MW) heat input (250 million Btu/hour) of fossil fuel. A new reference method for determining continuous compliance with $SO_2$ and $NO_x$ standards is also established. The Clean Air Act Amendments of 1977 require EPA to revise the current standards of performance for fossil-fuel-fired stationary sources. The intended effect of this regulation is to require new, modified, and reconstructed electric utility steam generating units to use the best demonstrated technological system of continuous emission reduction and to satisfy the requirements of the Clean Air Act Amendments of 1977.

**DATES:** The effective date of this regulation is June 11, 1979.

**ADDRESSES:** A Background Information Document (BID; EPA 450/3-79-021) has been prepared for the final standard. Copies of the BID may be obtained from the U.S. EPA Library (MD-35), Research Triangle Park, N.C. 27711, telephone 919-541-2777. In addition, a copy is available for inspection in the Office of Public Affairs in each Regional Office, and in EPA's Central Docket Section in Washington, D.C. The BID contains (1) a summary of all the public comments made on the proposed regulation; (2) a summary of the data EPA has obtained since proposal on $SO_2$, particulate matter, and $NO_x$ emissions; and (3) the final Environmental Impact Statement which summarizes the impacts of the regulation.

Docket No. OAQPS-78-1 containing all supporting information used by EPA in developing the standards is available for public inspection and copying between 8 a.m. and 4 p.m., ge a11jn0.005Monday through Friday, at EPA's Central Docket Section, room 2903B, Waterside Mall, 401 M Street, SW., Washington, D.C. 20460.

The docket is an organized and complete file of all the information submitted to or otherwise considered by the Administrator in the development of this rulemaking. The docketing system is intended to allow members of the public and industries involved to readily identify and locate documents so that they can intelligently and effectively participate in the rulemaking process. Along with the statement of basis and purpose of the promulgated rule and EPA responses to significant comments, the contents of the docket will serve as the record in case of judicial review [section 107(d)(a)].

**FOR FURTHER INFORMATION CONTACT:** Don R. Goodwin, Director, Emission Standards and Engineering Division (MD-13), Environmental Protection Agency, Research Triangle Park, N.C. 27711, telephone 919-541-5271.

**SUPPLEMENTARY INFORMATION:** This preamble contains a detailed discussion of this rulemaking under the following headings: SUMMARY OF STANDARDS, RATIONALE, BACKGROUND, APPLICABILITY, COMMENTS ON PROPOSAL, REGULATORY ANALYSIS, PERFORMANCE TESTING, MISCELLANEOUS.

### Summary of Standards

*Applicability*

The standards apply to electric utility steam generating units capable of firing more than 73 MW (250 million Btu/hour) heat input of fossil fuel, for which construction is commenced after September 18, 1978. Industrial cogeneration facilities that sell less than 25 MW of electricity, or less than one-third of their potential electrical output capacity, are not covered. For electric utility combined cycle gas turbines, applicability of the standards is determined on the basis of the fossil-fuel fired to the steam generator exclusive of the heat input and electrical power contribution of the gas turbine.

*$SO_2$ Standards*

The $SO_2$ standards are as follows:

(1) Solid and solid-derived fuels (except solid solvent refined coal): $SO_2$ emissions to the atmosphere are limited to 520 ng/J (1.20 lb/million Btu) heat input, and a 90 percent reduction in potential $SO_2$ emissions is required at all times except when emissions to the atmosphere are less than 260 ng/J (0.60 lb/million Btu) heat input. When $SO_2$ emissions are less than 260 mg/J (0.60 lb/million Btu) heat input, a 70 percent reduction in potential emissions is required. Compliance with the emission limit and percent reduction requirements is determined on a continuous basis by using continuous monitors to obtain a 30-day rolling average. The percent reduction is computed on the basis of overall $SO_2$ removed by all types of $SO_2$ and sulfur removal technology, including flue gas desulfurization (FGD) systems and fuel pretreatment systems (such as coal cleaning, coal gasification, and coal liquefaction). Sulfur removed by a coal pulverizer or in bottom ash and fly ash may be included in the computation.

(2) Gaseous and liquid fuels not derived from solid fuels: $SO_2$ emissions into the atmosphere are limited to 340 ng/J (0.80 lb/million Btu) heat input, and a 90 percent reduction in potential $SO_2$ emissions is required. The percent reduction requirement does not apply if $SO_2$ emissions into the atmosphere are less than 86 ng/J (0.20 lb/million Btu) heat input. Compliance with the $SO_2$ emission limitation and percent reduction is determined on a continuous basis by using continuous monitors to obtain a 30-day rolling average.

(3) Anthracite coal: Electric utility steam generating units firing anthracite coal alone are exempt from the percentage reduction requirement of the $SO_2$ standard but are subject to the 520 ng/J (1.20 lb/million Btu) heat input emission limit on a 30-day rolling average, and all other provisions of the regulations including the particulate matter and $NO_x$ standards.

(4) Noncontinental areas: Electric utility steam generating units located in noncontinental areas (State of Hawaii, the Virgin Islands, Guam, American Samoa, the Commonwealth of Puerto Rico, and the Northern Mariana Islands) are exempt from the percentage reduction requirement of the $SO_2$ standard but are subject to the applicable $SO_2$ emission limitation and all other provisions of the regulations including the particulate matter and $NO_x$ standards.

(5) Resource recovery facilities: Resource recovery facilities that fire less than 25 percent fossil-fuel on a quarterly (90-day) heat input basis are not subject to the percentage reduction requirements but are subject to the 520 ng/J (1.20 lb/million Btu) heat input emission limit. Compliance with the emission limit is determined on a continuous basis using continuous monitoring to obtain a 30-day rolling average. In addition, such facilities must monitor and report their heat input by fuel type.

(6) Solid solvent refined coal: Electric utility steam generating units firing solid solvent refined coal (SRC I) are subject

to the 520 ng/J (1.20 lb/million Btu) heat input emission limit (30-day rolling average) and all requirements under the $NO_x$ and particulate matter standards. Compliance with the emission limit is determined on a continuous basis using a continuous monitor to obtain a 30-day rolling average. The percentage reduction requirement for SRC I, which is to be obtained at the refining facility itself, is 85 percent reduction in potential $SO_2$ emissions on a 24-hour (daily) averaging basis. Compliance is to be determined by Method 19. Initial full scale demonstration facilities may be granted a commercial demonstration permit establishing a requirement of 80 percent reduction in potential emissions on a 24-hour (daily) basis.

*Particulate Matter Standards*

The particulate matter standard limits emissions to 13 ng/J (0.03 lb/million Btu) heat input. The opacity standard limits the opacity of emission to 20 percent (6-minute average). The standards are based on the performance of a well-designed and operated baghouse or electostatic precipitator (ESP).

*$NO_x$ Standards*

The $NO_x$ standards are based on combustion modification and vary according to the fuel type. The standards are:

(1) 86 ng/J (0.20 lb/million Btu) heat input from the combustion of any gaseous fuel, except gaseous fuel derived from coal;

(2) 130 ng/J (0.30 lb/million Btu) heat input from the combustion of any liquid fuel, except shale oil and liquid fuel derived from coal;

(3) 210 ng/J (0.50 lb/million Btu) heat input from the combustion of subbituminous coal, shale oil, or any solid, liquid, or gaseous fuel derived from coal;

(4) 340 ng/J (0.80 lb/million Btu) heat input from the combustion in a slag tap furnace of any fuel containing more than 25 percent, by weight, lignite which has been mined in North Dakota, South Dakota, or Montana;

(5) Combustion of a fuel containing more than 25 percent, by weight, coal refuse is exempt from the $NO_x$ standards and monitoring requirements; and

(6) 260 ng/J (0.60 lb/million Btu) heat input from the combustion of any solid fuel not specified under (3), (4), or (5).

Continuous compliance with the $NO_x$ standards is required, based on a 30-day rolling average. Also, percent reductions in uncontrolled $NO_x$ emission levels are required. The percent reductions are not controlling, however, and compliance with the $NO_x$ emission limits will assure compliance with the percent reduction requirements.

*Emerging Technologies*

The standards include provisions which allow the Administrator to grant commercial demonstration permits to allow less stringent requirements for the initial full-scale demonstration plants of certain technologies. The standards include the following provisions:

(1) Facilities using SRC I would be subject to an emission limitation of 520 ng/J (1.20 lb/million Btu) heat input, based on a 30-day rolling average, and an emission reduction requirement of 85 percent, based on a 24-hour average. However, the percentage reduction allowed under a commercial demonstration permit for the initial full-scale demonstration plants, using SRC I would be 80 percent (based on a 24-hour average). The plant producing the SRC I would monitor to insure that the required percentage reduction (24-hour average) is achieved and the power plant using the SRC I would monitor to insure that the 520 ng/J heat input limit (30-day rolling average) is achieved.

(2) Facilities using fluidized bed combustion (FBC) or coal liquefaction would be subject to the emission limitation and percentage reduction requirement of the $SO_2$ standard and to the particulate matter and $NO_x$ standards. However, the reduction in potential $SO_2$ emissions allowed under a commercial demonstration permit for the initial full-scale demonstration plants using FBC would be 85 percent (based on a 30-day rolling average). The $NO_x$ emission limitation allowed under a commercial demonstration permit for the initial full-scale demonstration plants using coal liquefaction would be 300 ng/J (0.70 lb/million Btu) heat input, based on a 30-day rolling average.

(3) No more than 15,000 MW equivalent electrical capacity would be allotted for the purpose of commercial demonstration permits. The capacity will be allocated as follows:

| Technology | Pollutant | Equivalent electrical capacity MW |
|---|---|---|
| Solid solvent-refined coal | $SO_2$ | 5,000–10,000 |
| Fluidized bed combustion (atmospheric) | $SO_2$ | 400–3,000 |
| Fluidized bed combustion (pressurized) | $SO_2$ | 200–1,200 |
| Coal liquefaction | $NO_x$ | 750–10,000 |

*Compliance Provisions*

Continuous compliance with the $SO_2$ and $NO_x$ standards is required and is to be determined with continuous emission monitors. Reference methods or other approved procedures must be used to supplement the emission data when the continuous emission monitors malfunction, to provide emissions data for at least 18 hours of each day for at least 22 days out of any 30 successive days of boiler operation.

A malfunctioning FGD system may be bypassed under emergency conditions. Compliance with the particulate standard is determined through performance tests. Continuous monitors are required to measure and record the opacity of emissions. This data is to be used to identify excess emissions to insure that the particulate matter control system is being properly operated and maintained.

**Rationale**

*$SO_2$ Standards*

Under section 111(a) of the Act, a standard of performance for a fossil-fuel-fired stationary source must reflect the degree of emission limitation and percentage reduction achievable through the application of the best technological system of continuous emission reduction taking into consideration cost and any nonair quality health and environmental impacts and energy requirements. In addition, credit may be given for any cleaning of the fuel, or reduction in pollutant characteristics of the fuel, after mining and prior to combustion.

In the 1977 amendments to the Clean Air Act, Congress was severely critical of the current standard of performance for power plants, and especially of the fact that it could be met by the use of untreated low-sulfur coal. The House, in particular, felt that the current standard failed to meet six of the purposes of section 111. The six purposes are (H. Rept. at 184–186):

1. The standards must not give a competitive advantage to one State over another in attracting industry.

2. The standards must maximize the potential for long-term economic growth by reducing emissions as much as practicable. This would increase the amount of industrial growth possible within the limits set by the air quality standards.

3. The standards must to the extent practical force the installation of all the control technology that will ever be necessary on new plants at the time of construction when it is cheaper to install, thereby minimizing the need for retrofit in the future when air quality standards begin to set limits to growth.

4 and 5. The standards to the extent practical must force new sources to burn high-sulfur fuel thus freeing low-sulfur fuel for use in existing sources where it

is harder to control emissions and where low-sulfur fuel is needed for compliance. This will (1) allow old sources to operate longer and (2) expand environmentally acceptable energy supplies.

6. The standards should be stringent in order to force the development of improved technology.

To deal with these perceived deficiences, the House initiated revisions to section 111 as follows:

1. New source performance standards must be based on the "best technological" control system that has been "adequately demonstrated," taking cost and other factors such as energy into account. The insertion of the word "technological" precludes a new source performance standard based solely on the use of low-sulfur fuels.

2. New source performance standards for fossil-fuel-fired sources (e.g., power plants) must require a "percentage reduction" in emissions, compared to the emissions that would result from burning untreated fuels.

The Conference Committee generally followed the House bill. As a result, the 1977 amendments substantially changed the criteria for regulating new power plants by requiring the application of technological methods of control to minimize $SO_2$ emissions and to maximize the use of locally available coals. Under the statute, these goals are to be achieved through revision of the standards of performance for new fossil-fuel-fired stationary sources to specify (1) an emission limitation and (2) a percentage reduction requirement. According to legislative history accompanying the amendments, the percentage reduction requirement should be applied uniformly on a nationwide basis, unless the Administrator finds that varying requirements applied to fuels of differing characteristics will not undermine the objectives of the house bill and other Act provisions.

The principal issue throughout this rulemaking has been whether a plant burning low-sulfur coal should be required to achieve the same percentage reduction in potential $SO_2$ emissions as those burning higher sulfur coal. The public comments on the proposed rules and subsequent analyses performed by the Office of Air, Noise and Radiation of EPA served to bring into focus several other issues as well.

These issues included performance capabilities of $SO_2$ control technology, the averaging period for determining compliance, and the potential adverse impact of the emission ceiling on high-sulfur coal reserves.

Prior to framing the final $SO_2$ standards, the EPA staff carried out extensive analyses of a range of alternative $SO_2$ standards using an econometric model of the utility sector. As part of this effort, a joint working group comprised of representatives from EPA, the Department of Energy, the Council of Economic Advisors, the Council on Wage and Price Stability, and others reviewed the underlying assumptions used in the model. The results of these analyses served to identify environmental, economic, and energy impacts associated with each of the alternatives considered at the national and regional levels. In addition, supplemental analyses were performed to assess impacts of alternative emission ceilings on specific coal reserves, to verify performance characteristics of alternative $SO_2$ scrubbing technologies, and to assess the sulfur reduction potential of coal preparation techniques.

Based on the public record and additional analyses performed, the Administrator concluded that a 90 percent reduction in potential $SO_2$ emissions (30-day rolling average) has been adequately demonstrated for high-sulfur coals. This level can be achieved at the individual plant level even under the most demanding conditions through the application of flue gas desulfurization (FGD) systems together with sulfur reductions achieved by currently practiced coal preparation techniques. Reductions achieved in the fly ash and bottom ash are also applicable. In reaching this finding, the Administrator considered the performance of currently operating FGD systems (scrubbers) and found that performance could be upgraded to achieve the recommended level with better design, maintenance, and operating practices. A more stringent requirement based on the levels of scrubber performance specified for lower sulfur coals in a number of prevention of significant deterioration permits was not adopted since experience with scrubbers operating with such performance levels on high-sulfur coals is limited. In selecting a 30-day rolling average as the basis for determining compliance, the Administrator took into consideration effects of coal sulfur variability on scrubber performance as well as potential adverse impacts that a shorter averaging period may have on the ability of small plants to comply.

With respect to lower sulfur coals, the EPA staff examined whether a uniform or variable application of the percent reduction requirement would best satisfy the statutory requirements of section 111 of the Act and the supporting legislative history. The Conference Report for the Clean Air Act Amendments of 1977 says in the pertinent part:

> In establishing a national percent reduction for new fossil fuel-fired sources, the conferees agreed that the Administrator may, in his discretion, set a range of pollutant reduction that reflects varying fuel characteristics. Any departure from the uniform national percentage reduction requirement, however, must be accompanied by a finding that such a departure does not undermine the basic purposes of the House provision and other provisions of the act, such as maximizing the use of locally available fuels.

In the face of such language, it is clear that Congress established a presumption in favor of a uniform application of the percentage reduction requirement and that any departure would require careful analysis of objectives set forth in the House bill and the Conference Report.

This question was made more complex by the emergence of dry $SO_2$ control systems. As a result of public comments on the discussion of dry $SO_2$ control technology in the proposal, the EPA staff examined the potential of this technology in greater detail. It was found that the development of dry $SO_2$ controls has progressed rapidly during the past 12 months. Three full scale systems are being installed on utility boilers with scheduled start up in the 1981–1982 period. These already contracted systems have design efficiencies ranging from 50 to 85 percent $SO_2$ removal, long term average. In addition, it was determined that bids are currently being sought for five more dry control systems (70 to 90 percent reduction range) for utility applications.

Activity in the dry $SO_2$ control field is being stimulated by several factors. First, dry control systems are less complex than wet technology. These simplified designs offer the prospect of greater reliability at substantially lower costs than their wet counterparts. Second, dry systems use less water than wet scrubbers, which is an important consideration in the Western part of the United States. Third, the amount of energy required to operate dry systems is less than that required for wet systems. Finally, the resulting waste product is more easily disposed of than wet sludge.

The applicability of dry control technology, however, appears limited to low-sulfur coals. At coal sulfur contents greater than about 1290 ng/J (3 pounds $SO_2$/million Btu), or about 1.5 percent sulfur coal, available data indicate that

it probably will be more economical to employ a wet scrubber than a dry control system.

Faced with these findings, the Administrator had to determine what effect the structure of the final regulation would have on the continuing development and application of this technology. A thorough engineering review of the available data indicated that a requirement of 90 percent reduction in potential $SO_2$ emissions would be likely to constrain the full development of this technology by limiting its potential applicability to high alkaline content, low-sulfur coals. For non-alkaline, low-sulfur coals, the certainty of economically achieving a 90 percent reduction level is markedly reduced. In the face of this finding, it would be unlikely that the technology would be vigorously pursued for these low alkaline fuels which comprise approximately one half of the Nation's low-sulfur coal reserves. In view of this, the Administrator sought a percentage reduction requirement that would provide an opportunity for dry $SO_2$ technology to be developed for all low-sulfur coal reserves and yet would be sufficiently stringent to assure that the technology was developed to its fullest potential. The Administrator concluded that a variable control approach with a minimum requirement of 70 percent reduction potential in $SO_2$ emissions (30-day rolling average) for low-sulfur coals would fulfill this objective. This will be discussed in more detail later in the preamble. Less stringent, sliding scale requirements such as those offered by the utility industry and the Department of Energy were rejected since they would have higher associated emissions, would not be significantly less costly, and would not serve to encourage development of this technology.

In addition to promoting the development of dry $SO_2$ systems, a variable approach offers several other advantages often cited by the utility industry. For example, if a source chose to employ wet technology, a 70 percent reduction requirement serves to substantially reduce the energy impact of operating wet scrubbers in low-sulfur coals. At this level of wet scrubber control, a portion of the untested flue gas could be used for plume reheat so as to increase plume buoyancy, thus reducing if not eliminating the need to expend energy for flue gas reheat. Further, by establishing a range of percent reductions, a variable approach would allow a source some flexibility particularly when selecting intermediate sulfur content coals. Finally, under a variable approach, a source could move to a lower sulfur content coal to achieve compliance if its control equipment failed to meet design expectations. While these points alone would not be sufficient to warrant adoption of a variable standard, they do serve to supplement the benefits associated with permitting the use of dry technology.

Regarding the maximum emission limitation, the Administrator had to determine a level that was appropriate when a 90 percent reduction in potential emissions was applied to high-sulfur coals. Toward this end, detailed assessments of the potential impacts of a wide range of emission limitations on high-sulfur coal reserves were performed. The results revealed that a significant portion (up to 30 percent) of the high-sulfur coal reserves in the East, Midwest and portions of the Northern Appalachia coal regions would require more than a 90 percent reduction if the emission limitation were established below 520 ng/J (1.2 lb/million Btu) heat input on a 30-day rolling average basis. Although higher levels of control are technically feasible, conservatism in utility perceptions of scrubber performance could create a significant disincentive against the use of these coals and disrupt the coal markets in these regions. Accordingly, the Administrator concluded the emission limitation should be maintained at 520 ng/J (1.2 lb/million Btu) heat input on a 30-day rolling average basis. A more stringent emission limit would be counter to one of the purposes of the 1977 Amendments, that is, encouraging the use of higher sulfur coals.

Having determined an appropriate emission limitation and that a variable percent reduction requirement should be established, the Administrator directed his attention to specifying the final form of the standard. In doing so, he sought to achieve the best balance in control requirements. This was accomplished by specifying a 520 ng/J (1.2 lb/million Btu) heat input emission limitation with a 90 percent reduction in potential $SO_2$ emissions except when emissions to the atmosphere were reduced below 260 ng/J (0.6 lb/million Btu) heat input (30-day rolling average), when only a 70 percent reduction in potential $SO_2$ emissions would apply. Compliance with each of the requirements would be determined on the basis of a 30-day rolling average. Under this approach, plants firing high-sulfur coals would be required to achieve a 90 percent reduction in potential emissions in order to comply with the emission limitation. Those using intermediate- or low-sulfur content coals would be permitted to achieve between 70 and 90 percent reduction, provided their emissions were less than 260 ng/J (0.6 lb/million Btu). The 260 ng/J (0.6 lb/million Btu) level was selected to provide for a smooth transition of the percentage reduction requirement from high- to low-sulfur coals. Other transition points were examined but not adopted since they tended to place certain types of coal at a disadvantage.

By fashioning the $SO_2$ standard in this manner, the Administrator believes he has satisfied both the statutory language of section 111 and the pertinent part of the Conference Report. The standard reflects a balance in environmental, economic, and energy considerations by being sufficiently stringent to bring about substantial reductions in $SO_2$ emissions (3 million tons in 1995) yet does so at reasonable costs without significant energy penalties. When compared to a uniform 90 percent reduction, the standard achieves the same emission reductions at the national level. More importantly, by providing an opportunity for full development of dry $SO_2$ technology the standard offers potential for further emission reductions (100 to 200 thousand tons per year), cost savings (over $1 billion per year), and a reduction in oil consumption (200 thousand barrels per day) when compared to a uniform standard. The standard through its balance and recognition of varying coal characteristics, serves to expand environmentally acceptable energy supplies without conveying a competitive advantage to any one coal producing region. The maintenance of the emission limitation at 520 ng/J (1.2 lb $SO_2$/million Btu) will serve to encourage the use of locally available high-sulfur coals. By providing for a range of percent reductions, the standard offers flexibility in regard to burning of intermediate sulfur content coals. By placing a minimum requirement of 70 percent on low-sulfur coals, the final rule encourages the full development and application of dry $SO_2$ control systems on a range of coals. At the same time, the minimum requirement is sufficiently stringent to reduce the amount of low-sulfur coal that moves eastward when compared to the current standard. Admittedly, a uniform 90 percent requirement would reduce such movements further, but in the Administrator's opinion, such gains would be of marginal value when compared to expected increases in high-sulfur coal production. By achieving a balanced coal demand within the utility sector and by promoting the development of less expensive $SO_2$ control technology, the final standard

will expand environmentally acceptable energy supplies to existing power plants and industrial sources.

By substantially reducing $SO_2$ emissions, the standard will enhance the potential for long term economic growth at both the national and regional levels. While more restrictive requirements may have resulted in marginal air quality improvements locally, their higher costs may well have served to retard rather than promote air quality improvement nationally by delaying the retirement of older, poorly controlled plants.

The standard must also be viewed within the broad context of the Clean Air Act Amendments of 1977. It serves as a minimum requirement for both prevention of significant deterioration and non-attainment considerations. When warranted by local conditions, ample authority exists to impose more restrictive requirements through the case-by-case new source review process. When exercised in conjunction with the standard, these authorities will assure that our pristine areas and national parks are adequately protected. Similarly, in those areas where the attainment and maintenance of the ambient air quality standard is threatened, more restrictive requirements will be imposed.

The standard limits $SO_2$ emissions from facilities firing gaseous or liquid fuels to 340 ng/J (0.80 lb/million Btu) heat input and requires 90 percent reduction in potential emissions on a 30-day rolling average basis. The percent reduction does not apply when emissions are less than 86 ng/J (0.20 lb/million Btu) heat input on a 30-day rolling average basis. This reflects a change to the proposed standards in that the time for compliance is changed from the proposed 24-hour basis to a 30-day rolling average. This change is necessary to make the compliance times consistent for all fuels. Enforcement of the standards would be complicated by different averaging times, particularly when more than one fuel is used.

*Particulate Matter Standard*

The standard for particulate matter limits the emissions to 13 ng/J (0.03 lb/million Btu) heat input and requires a 99 percent reduction in uncontrolled emissions for solid fuels and a 70 percent reduction for liquid fuels. No particulate matter control is necessary for units firing gaseous fuels alone, and a percent reduction is not required. The percent reduction requirements for solid and liquid fuels are not controlling, and compliance with the particulate matter emission limit will assure compliance with the percent reduction requirements.

A 20 percent (6-minute average) opacity limit is included in this standard. The opacity limit is included to insure proper operation and maintenance of the emission control system. If an affected facility were to comply with all applicable standards except opacity, the owner or operator may request that the Administrator, under 40 CFR 60.11(e), establish a source-specific opacity limit for that affected facility.

The standard is based on the performance of a well designed, operated and maintained electrostatic precipitator (ESP) or baghouse control system. The Administrator has determined that these control systems are the best adequately demonstrated technological systems of continuous emission reduction (taking into consideration the cost of achieving such emission reduction, and nonair quality health and environmental impacts and energy requirements).

*Electrostatic Precipitators*

EPA collected emission data from 21 ESP-equipped steam generating units which were firing low-sulfur coals (0.4–1.9 percent). EPA evaluated emission levels from units burning relatively low-sulfur coal because it is more difficult for an ESP to collect particulate matter emissions generated by the combustion of low-sulfur coal than high-sulfur coal. None of the ESP control systems at the 21 coal-fired steam generators tested were designed to achieve a 13 ng/J (0.03 lb/million Btu) heat input emission level, however, emission levels at 9 of the 21 units were below the standard. All of the units that were firing coal with a sulfur content between 1.0 and 1.9 percent and which had emission levels below the standard had either a hot-side ESP (an ESP located before the combustion air preheater) with a specific collection area greater than 89 square meters per actual cubic meter per second (452 $ft^2$/1,000 ACFM), or a cold-side ESP (an ESP located after the combustion air preheater) with a specific collection area greater than 85 square meters per actual cubic meter per second (435 $ft^2$/1,000 ACFM).

ESP's require a larger specific collection area when applied to units burning low-sulfur coal than to units burning high-sulfur coal because the electrical resistivity of the fly ash is higher with low-sulfur coal. Based on an examination of the emission data in the record, it is the Administrator's judgment that when low-sulfur coal is being fired an ESP must have a specific collection area from about 130 (hot side) to 200 (cold side) square meters per actual cubic meter per second (650 to 1,000 $ft^2$ per 1,000 ACFM) to comply with the standard. When high-sulfur coal (greater than 3.5 percent sulfur) is being fired an ESP must have a specific collection area of about 72 (cold side) square meters per actual cubic meter per second (360 $ft^2$ per 1,000 ACFM) to comply with the standard.

Cold-side ESP's have traditionally been used to control particulate matter emissions from power plants. The problem of ESP collection of high-electrical-resistivity fly ash from low-sulfur coal can be reduced by using a hot-side ESP. Higher fly ash collection temperatures result in better ESP performance by reducing fly ash resistivity for most types of low-sulfur coal. Reducing fly ash resistivity in itself would decrease the ESP collection plate area needed to meet the standard; however, for a hot-side ESP this benefit is reduced by the increased flue gas volume resulting from the higher flue gas temperature. Although a smaller collection area is required for a hot-side ESP than for a cold side ESP, this benefit is offset by greater construction costs due to the higher quality of materials, thicker insulation, and special design provisions to accommodate the expansion and warping potential of the collection plates.

*Baghouses*

The Administrator has evaluated data from more than 50 emission test runs conducted at 8 baghouse-equipped coal-fired steam generating units. Although none of these baghouse-controlled units were designed to achieve a 13 Ng/J (0.03 lb/million Btu) heat input emission level, 48 of the test results achieved this level and only 1 test at each of 2 units exceeded 13 Ng/J (0.03 lb/million Btu) heat input. The emission levels at the two units with emission levels above 13 Ng/J (0.03 lb/million Btu) heat input could conceivably be reduced below that level through an improved maintenance program. It is the Administrator's judgment that baghouses with an air-to-cloth ratio of 0.6 actual cubic meter per minute per square meter (2 ACFM/$ft^2$) will achieve the standard at a pressure drop of less than 1.25 kilopascals (5 in. $H_2O$). The Administrator has concluded that this air/cloth ratio and pressure drop are reasonable when considering cost, energy, and nonair quality impacts.

When an owner or operator must choose between an ESP and a baghouse to meet the standard, it is the Administrator's judgment that

baghouses have an advantage for low-sulfur coal applications and ESP's have an advantage for high-sulfur coal applications. Available data indicate that for low-sulfur coals, ESP's (hot-side or cold-side) require a large collection area and thus ESP control system costs will be higher than baghouse control system costs. For high-sulfur coals, large collection areas are not required for ESP's, and ESP control systems offer cost savings over baghouse control systems.

Baghouses have not traditionally been used at utility power plants. At the time these regulations were proposed, the largest baghouse-controlled coal-fired steam generator for which EPA had particulate matter emission test data had an electrical output of 44 MW. Several larger baghouse installations were under construction and two larger units were initiating operation. Since the date of proposal of these standards, EPA has tested one of the new units. It has an electrical output capacity of 350 MW and is fired with pulverized, subbituminous coal containing 0.3 percent sulfur. The baghouse control system for this facility is designed to achieve a 43 Ng/J (0.01 lb/million Btu) heat input emission limit. This unit has achieved emission levels below 13 Ng/J (0.03 lb/million Btu) heat input. The baghouse control system was designed with an air-to-cloth ratio of 1.0 actual cubic meter per minute per square meter (3.32 ACFM/ft$^2$) and a pressure drop of 1.25 kilopascals (5 in. $H_2O$). Although some operating problems have been encountered, the unit is being operated within its design emission limit and the level of the standard. During the testing the power plant operated in excess of 300 MW electrical output. Work is continuing on the control system to improve its performance. Regardless of type, large emission control systems generally require a period of time for the establishment of cleaning, maintenance, and operational procedures that are best suited for the particular application.

Baghouses are designed and constructed in modules rather than as one large unit. The baghouse control system for the new 350 MW power plant has 28 baghouse modules, each of which services 12.5 MW of generating capacity. As of May 1979, at least 26 baghouse-equipped coal-fired utility steam generators were operating, and an additional 28 utility units are planned to start operation by the end of 1982. About two-thirds of the 30 planned baghouse-controlled power generation systems will have an electrical output capacity greater than 150 MW, and more than one-third of these power plants will be fired with coal containing more than 3 percent sulfur. The Administrator has concluded that baghouse control systems have been adequately demonstrated for full-sized utility application.

*Scrubbers*

EPA collected emission test data from seven coal-fired steam generators controlled by wet particulate matter scrubbers. Emissions from five of the seven scrubber-equipped power plants were less than 21 Ng/J (0.05 lb/million Btu) heat input. Only one of the seven units had emission test results less than 13 Ng/J (0.03 lb/million Btu) heat input. Scrubber pressure drop can be increased to improve scrubber particulate matter removal efficiencies; however, because of cost and energy considerations, the Administrator believes that wet particulate matter scrubbers will only be used in special situations and generally will not be selected to comply with the standards.

*Performance Testing*

When the standards were proposed, the Administrator recognized that there is a potential for both FGD sulfate carryover and sulfuric acid mist to affect particulate matter performance testing downstream of an FGD system. Data available at the time of proposal indicated that overall particulate matter emissions, including sulfate carryover, are not increased by a properly designed, constructed, maintained, and operated FGD system. No additional information has been received to alter this finding.

The data available at proposal indicated that sulfuric acid mist ($H_2SO_4$) interaction with Methods 5 or 17 would not be a problem when firing low-sulfur coal, but may be a problem when firing high-sulfur coals. Limited data obtained since proposal indicate that when high-sulfur coal is being fired, there is a potential for sulfuric acid mist to form after an FGD system and to introduce errors in the performance testing results when Methods 5 or 17 are used. EPA has obtained particulate matter emission test data from two power plants that were fired with coals having more than 3 percent sulfur and that were equipped with both an ESP and FGD system. The particulate matter test data collected after the FGD system were not conclusive in assessing the acid mist problem. The first facility tested appeared to experience a problem with acid mist interaction. The second facility did not appear to experience a problem with acid mist, and emissions after the ESP/FGD system were less than 13 ng/J (0.03 lb/million Btu) heat input. The tests at both facilities were conducted using Method 5, but different methods were used for measuring the filter temperature. EPA has initiated a review of Methods 5 and 17 to determine what modifications may be necessary to avoid acid mist interaction problems. Until these studies are completed the Administrator is approving as an optional test procedure the use of Method 5 (or 17) for performance testing before FGD systems. Performance testing is discussed in more detail in the PERFORMANCE TESTING section of this preamble.

The particulate matter emission limit and opacity limit apply at all times, except during periods of startup, shutdown, or malfunction. Compliance with the particulate matter emission limit is determined through performance tests using Methods 5 or 17. Compliance with the opacity limit is determined by the use of Method 9. A continuous monitoring system to measure opacity is required to assure proper operation and maintenance of the emission control system but is not used for continuous compliance determinations. Data from the continuous monitoring system indicating opacity levels higher than the standard are reported to EPA quarterly as excess emissions and not as violations of the opacity standard.

The environmental impacts of the revised particulate matter standards were estimated by using an economic model of the coal and electric utility industries (see discussion under REGULATORY ANALYSIS). This projection took into consideration the combined effect of complying with the revised $SO_2$, particulate matter, and $NO_x$ standards on the construction and operation of both new and existing capacity. Particulate matter emissions from power plants were 3.0 million tons in 1975. Under continuation of the current standards, these emissions are predicted to decrease to 1.4 million tons by 1995. The primary reason for this decrease in emissions is the assumption that existing power plants will come into compliance with current state emission regulations. Under these standards, 1995 emissions are predicted to decrease another 400 thousand tons (30 percent).

*$NO_x$ Standards*

The $NO_x$ emission standards are based on emission levels achievable with a properly designed and operated boiler that incorporates combustion modification techniques to reduce $NO_x$ formation. The levels to which $NO_x$ emissions can be reduced with

combustion modification depend not only upon boiler operating practice, but also upon the type of fuel burned. Consequently, the Administrator has developed fuel-specific $NO_x$ standards. The standards are presented in this preamble under Summary of Standards.

Continuous compliance with the $NO_x$ standards is required, based on a 30-day rolling average. Also, percent reductions in uncontrolled $NO_x$ emission levels are required. The percent reductions are not controlling, however, and compliance with the $NO_x$ emission limits will assure compliance with the percent reduction requirements.

One change has been made to the proposed $NO_x$ standards. The proposed standards would have required compliance to be based on a 24-hour averaging period, whereas the final standards require compliance to be based on a 30-day rolling average. This change was made because several of the comments received, one of which included emission data, indicated that more flexibility in boiler operation on a day-to-day basis is needed to accommodate slagging and other boiler problems that may influence $NO_x$ emissions when coal is burned. The averaging period for determining compliance with the $NO_x$ limitations for gaseous and liquid fuels has been changed from the proposed 24-hour to a 30-day rolling average. This change is necessary to make the compliance times consistent for all fuels. Enforcement of the standards would be complicated by different averaging times, particularly where more than one fuel is used. More details on the selection of the averaging period for coal appear in this preamble under Comments on Proposal.

The proposed standards for coal combustion were based principally on the results of EPA testing performed at six electric utility boilers, all of which are considered to represent modern boiler designs. One of the boilers was manufactured by the Babcock and Wilcox Company (B&W) and was retrofitted with low-emission burners. Four of the boilers were Combustion Engineering, Inc. (CE) designs originally equipped with overfire air, and one boiler was a CE design retrofitted with overfire air. The six boilers burned a variety of bituminous and subbituminous coals. Conclusions drawn from the EPA studies of the boilers were that the most effective combustion modification techniques for reducing $NO_x$ emitted from utility boilers are staged combustion, low excess air, and reduced heat release rate. Low-emission burners were also effective in reducing $NO_x$ levels during the EPA studies.

In developing the proposed standards for coal, the Administrator also considered the following: (1) data obtained from the boiler manufacturers on 11 CE, three B&W, and three Foster Wheeler Energy Corporation (FW) utility boilers; (2) the results of tests performed twice daily over 30-day periods at three well-controlled utility boilers manufactured by CE; (3) a total of six months of continuously monitored $NO_x$ emission data from two CE boilers located at the Colstrip plant of the Montana Power Company; (4) plans underway at B&W, FW, and the Riley Stoker Corporation (RS) to develop low-emission burners and furnace designs; (5) correspondence from CE indicating that it would guarantee its new boilers to achieve, without adverse side-effects, emission limits essentially the same as those proposed; and (6) guarantees made by B&W and FW that their new boilers would achieve the State of New Mexico's $NO_x$ emission limit of 190 ng/J (0.45 lb/million Btu) heat input.

Since proposal of the standards, the following new information has become available and has been considered by the Administrator: (1) additional data from the boiler manufacturers on four B&W and four RS utility boilers; (2) a total of 18 months of continuously monitored $NO_x$ data from the two CE utility boilers at the Colstrip plant; (3) approximately 10 months of continuously monitored $NO_x$ data from five other CE boilers; (4) recent performance test results for a CE and a RS utility boiler; and (5) recent guarantees offered by CE and FW to achieve an $NO_x$ emission limit of 190 ng/J (0.45 lb/million Btu) heat input in the State of California. This and other new information is discussed in "Electric Utility Steam Generating Units, Background Information for Promulgated Emission Standards" (EPA 450/3-79-021).

The data available before and after proposal indicate that $NO_x$ emission levels below 210 ng/J (0.50 lb/million Btu) heat input are achievable with a variety of coals burned in boilers made by all four of the major boiler manufacturers. Lower emission levels are theoretically achievable with catalytic ammonia injection, as noted by several commenters. However, these systems have not been adequately demonstrated at this time on full-size electric utility boilers that burn coal.

Continuously monitored $NO_x$ emission data from coal-fired CE boilers indicate that emission variability during day-to-day operation is such that low $NO_x$ levels can be maintained if emissions are averaged over 30-day periods. Although the Administrator has not been able to obtain continuously monitored data from boilers made by the other boiler manufacturers, the Administrator believes that the emission variability exhibited by CE boilers over long periods of time is also characteristic of B&W, FW, and RS boilers. This is because the Administrator expects B&W, FW, and RS boilers to experience operational conditions which are similar to CE boilers (e.g., slagging, variations in fuel quality, and load reductions) when burning similar fuel. Thus, the Administrator believes the 30-day averaging time is appropriate for coal-fired boilers made by all four manufacturers.

Prior to proposal of the standards several electric utilities and boiler manufacturers expressed concern over the potential for accelerated boiler tube wastage (i.e., corrosion) during low-$NO_x$ operation of a coal-fired boiler. The severity of tube wastage is believed to vary with several factors, but especially with the sulfur content of the coal burned. For example, the combustion of high-sulfur bituminous coal appears to aggravate tube wastage, particularly if it is burned in a reducing atmosphere. A reducing atmosphere is sometimes associated with low-$NO_x$ operation.

The EPA studies of one B&W and five CE utility boilers concluded that tube wastage rates did not significantly increase during low-$NO_x$ operation. The significance of these results is limited, however, in that the tube wastage tests were conducted over relatively short periods of time (30 days or 300 hours). Also, only CE and B&W boilers were studied, and the B&W boiler was not a recent design, but was an old-style unit retrofitted with experimental low-emission burners. Thus, some concern still exists over potentially greater tube wastage during low-$NO_x$ operation when high-sulfur coals are burned. Since bituminous coals often have high sulfur contents, the Administrator has established a special emission limit for bituminous coals to reduce the potential for increased tube wastage during low-$NO_x$ operation.

Based on discussions with the boiler manufacturers and on an evaluation of all available tube wastage information, the Administrator has established an $NO_x$ emission limit of 260 ng/J (0.60 lb/million Btu) heat imput for the combustion of bituminous coal. The Administrator believes this is a safe level at which tube wastage will not be accelerated by low-$NO_x$ operation. In

support of this belief, CE has stated that it would guarantee its new boilers, when equipped with overfire air, to achieve the 260 ng/J (0.60 lb/million Btu) heat input limit without increased tube wastage rates when Eastern bituminous coals are burned. In addition, B&W has noted in several recent technical papers that its low-emission burners allow the furnace to be maintained in an oxidizing atmosphere, thereby reducing the potential for tube wastage when high-sulfur bituminous coals are burned. The other boiler manufacturers have also developed techniques that reduce the potential for tube wastage during low-$NO_x$ operation. Although the amount of tube wastage data available to the Administrator on B&W, FW, and RS boilers is very limited, it is the Administrator's judgement that all three of these manufacturers are capable of designing boilers which would not experience increased tube wastage rates as a result of compliance with the $NO_x$ standards.

Since the potential for increased tube wastage during low-$NO_x$ operation appears to be small when low-sulfur subbituminous coals are burned, the Administrator has established a lower $NO_x$ emission limit of 210 ng/J (0.50 lb/million Btu) heat input for boilers burning subbituminous coal. This limit is consistent with emission data from boilers representing all four manufacturers. Furthermore, CE has stated that it would guarantee its modern boilers to achieve an $NO_x$ limit of 210 ng/J (0.50 lb/million Btu) heat input, without increased tube wastage rates, when subbituminous coals are burned.

The emission limits for electric utility power plants that burn liquid and gaseous fuels are at the same levels as the emission limits originally promulgated in 1971 under 40 CFR Part 60, Subpart D for large steam generators. It was decided that a new study of combustion modification or $NO_x$ flue-gas treatment for oil- or gas-fired electric utility steam generators would not be appropriate because few, if any, of these kinds of power plants are expected to be built in the future.

Several studies indicate that $NO_x$ emissions from the combustion of fuels derived from coal, such as liquid solvent-refined coal (SRC II) and low-Btu synthetic gas, may be higher than those from petroleum oil or natural gas. This is because coal-derived fuels have fuel-bound nitrogen contents that approach the levels found in coal rather than those found in petroleum oil and natural gas. Based on limited emission data from pilot-scale facilities and on the known emission characteristics of coal, the Administrator believes that an achievable emission limit for solid, liquid, and gaseous fuels derived from coal is 210 ng/J (0.50 lb/million Btu) heat input. Tube wastage and other boiler problems are not expected to occur from boiler operation at levels as low as 210 ng/J when firing these fuels because of their low sulfur and ash contents.

$NO_x$ emission limits for lignite combustion were promulgated in 1978 (48 FR 9276) as amendments to the original standards under 40 CFR Part 60, Subpart D. Since no new information on $NO_x$ emission rates from lignite combustion has become available, the emission limits have not been changed for these standards. Also, these emission limits are the same as the proposed.

Little is known about the emission characteristics of shale oil. However, since shale oil typically has a higher fuel-bound nitrogen content than petroleum oil, it may be impossible for a well-controlled unit burning shale oil to achieve the $NO_x$ emission limit for liquid fuels. Shale oil does have a similar nitrogen content to coal, and it is reasonable to expect that the emission control techniques used for coal could also be used to limit $NO_x$ emissions from shale oil combustion. Consequently, the Administrator has limited $NO_x$ emissions from units burning shale oil to 210 ng/J (0.50 lb/million Btu) heat input, the same limit applicable to subbituminous coal, which is the same as proposed. There is no evidence that tube wastage or other boiler problems would result from operation of a boiler at 210 ng/J when shale oil is burned.

The combustion of coal refuse was exempted from the original steam generator standards under 40 CFR Part 60, Subpart D because the only furnace design believed capable of burning certain kinds of coal refuse, the slag tap furnace, inherently produces $NO_x$ emissions in excess of the $NO_x$ standard. Unlike lignite, virtually no $NO_x$ emission data are available for the combustion of coal refuse in slag tap furnaces. The Administrator has decided to continue the coal refuse exemption under the standards promulgated here because no new information on coal refuse combustion has become available since the exemption under Subpart D was established.

The environmental impacts of the revised $NO_x$ standards were estimated by using an economic model of the coal and electric utility industries (see discussion under REGULATORY ANALYSIS). This projection took into consideration the combined effect of complying with the revised $SO_2$, particulate matter, and $NO_x$ standards on the construction and operation of both new and existing capacity. National $NO_x$ emissions from power plants were 6.8 million tons in 1975 and are predicted to increase to 9.3 million tons by 1995 under the current standards. These standards are projected to reduce 1995 emissions by 600 thousand tons (6 percent).

**Background**

In December 1971, under section 111 of the Clean Air Act, the Administrator issued standards of performance to limit emissions of $SO_2$, particulate matter, and $NO_x$ from new, modified, and reconstructed fossil-fuel-fired steam generators (40 CFR 60.40 et seq.). Since that time, the technology for controlling emissions from this source category has improved, but emissions of $SO_2$, particulate matter, and $NO_x$ continue to be a national problem. In 1976, steam electric generating units contributed 24 percent of the particulate matter, 65 percent of the $SO_2$, and 29 percent of the $NO_x$ emissions on a national basis.

The utility industry is expected to have continued and significant growth. The capacity is expected to increase by about 50 percent with approximate 300 new fossil-fuel-fired power plant boilers to begin operation within the next 10 years. Associated with utility growth is the continued long-term increase in utility coal consumption from some 400 million tons/year in 1975 to about 1250 million tons/year in 1995. Under the current performance standards for power plants, national $SO_2$ emissions are projected to increase approximately 17 percent between 1975 and 1995.

Impacts will be more dramatic on a regional basis. For example, in the absence of more stringent controls, utility $SO_2$ emissions are expected to increase 1300 percent by 1995 in the West South Central region of the country (Texas, Oklahoma, Arkansas, and Louisiana).

EPA was petitioned on August 6, 1976, by the Sierra Club and the Oljato and Red Mesa Chapters of the Navaho Tribe to revise the $SO_2$ standard so as to require a 90 percent reduction in $SO_2$ emissions from all new coal-fired power plants. The petition claimed that advances in technology since 1971 justified a revision of the standard. As a result of the petition, EPA agreed to investigate the matter thoroughly. On January 27, 1977 (42 FR 5121), EPA announced that it had initiated a study to review the technological, economic, and other factors needed to determine to

what extent the $SO_2$ standard for fossil-fuel-fired steam generators should be revised.

On August 7, 1977, President Carter signed into law the Clean Air Act Amendments of 1977. The provisions under section 111(b)(6) of the Act, as amended, required EPA to revise the standards of performance for fossil-fuel-fired electric utility steam generators within 1 year after enactment.

After the Sierra Club petition of August 1976, EPA initiated studies to review the advancement made on pollution control systems at power plants. These studies were continued following the amendment of the Clean Air Act. In order to meet the schedule established by the Act, a preliminary assessment of the ongoing studies was made in late 1977. A National Air Pollution Control Techniques Advisory Committee meeting was held on December 13 and 14, 1977, to present EPA preliminary data. The meeting was open to the public and comments were solicited.

The Clean Air Act Amendments of 1977 required the standards to be revised by August 7, 1978. When it appeared that the Administrator would not meet this schedule, the Sierra Club filed a complaint on July 14, 1978, with the U.S. District Court for the District of Columbia requesting injunctive relief to require, among other things, that the Administrator propose the revised standards by August 7, 1978 (Sierra Club v. Costle, No. 78-1297). The Court approved a stipulation requiring the Administrator to (1) deliver proposed regulations to the Office of the Federal Register by September 12, 1978, and (2) promulgate the final regulations within 6 months after proposal (i.e., by March 19, 1979).

The Administrator delivered the proposal package to the Office of the Federal Register by September 12, 1978, and the proposed regulations were published September 19, 1978 (43 FR 42154). Public comments on the proposal were requested by December 15, and a public hearing was held December 12 and 13, the record of which was held open until January 15, 1979. More than 625 comment letters were received on the proposal. The comments were carefully considered, however, the issues could not be sufficiently evaluated in time to promulgate the standards by March 19, 1979. On that date the Administrator and the other parties in Sierra Club v. Costle filed with the Court a stipulation whereby the Administrator would sign and deliver the final standards to the Federal Register on or before June 1, 1979.

The Administrator's conclusions and responses to the major issues are presented in this preamble. These regulations represent the Administrator's response to the petition of the Navaho Tribe and Sierra Club and fulfill the rulemaking requirements under section 111(b)(6) of the Act.

## Applicability

### *General*

These standards apply to electric utility steam generating units capable of firing more than 73 MW (250 million Btu/hour) heat input of fossil fuel, for which construction is commenced after September 18, 1978. This is principally the same as the proposal. Some minor changes and clarification in the applicability requirements for cogeneration facilities and resource recovery facilities have been made.

On December 23, 1971, the Administrator promulgated, under Subpart D of 40 CFR Part 60, standards of performance for fossil-fuel-fired steam generators used in electric utility and large industrial applications. The standards adopted herein do not apply to electric utility steam generating units originally subject to those standards (Subpart D) unless the affected facilities are modified or reconstructed as defined under 40 CFR 60 Subpart A and this subpart. Similarly, units constructed prior to December 23, 1971, are not subject to either performance standard (Subpart D or Da) unless they are modified or reconstructed.

### *Electric Utility Steam Generating Units*

An electric utility steam generating unit is defined as any steam electric generating unit that is physically connected to a utility power distribution system and is constructed for the purpose of selling more than 25 MW electrical output and more than one third of its potential electrical output capacity. Any steam that is sold and ultimately used to produce electrical power for sale through the utility power distribution system is also included under the standard. The term "potential electrical generating capacity" has been added since proposal and is defined as 33 percent of the heat input rate at the facility. The applicability requirement of selling more than 25 MW electrical output capacity has also been added since proposal.

These standards cover industrial steam electric generating units or cogeneration units (producing steam for both electrical generation and process heat) that are capable of firing more than 73 MW (250 million Btu/hr) heat input of fossil fuel and are constructed for the purpose of selling through a utility power distribution system more than 25 MW electrical output and more than one-third of their potential electrical output capacity (or steam generating capacity ultimately used to produce electricity for sale). Facilities with a heat input rate in excess of 73 MW (250 million Btu/hour) that produce only industrial steam or that generate electricity but sell less than 25 MW electrical output through the utility power distribution system or sell less than one-third of their potential electric output capacity through the utility power distribution system are not covered by these standards, but will continue to be covered under Subpart D, if applicable.

Resource recovery units incorporating steam electric generating units that would meet the applicability requirements but that combust less than 25 percent fossil fuel on a quarterly (90-day) heat-input basis are not covered by the $SO_2$ percent reduction requirements under this standard. These facilities are subject to the $SO_2$ emission limitation and all other provisions of the regulation. They are also required to monitor their heat input by fuel type and to monitor $SO_2$ emissions. If more than 25 percent fossil fuel is fired on a quarterly heat input basis, the facility will be subject to the $SO_2$ percent reduction requirements. This represents a change from the proposal which did not include such provisions.

These standards cover steam generator emissions from electric utility combined-cycle gas turbines that are capable of being fired with more than 73 MW (250 million Btu/hr) heat input of fossil fuel and meet the other applicability requirements. Electric utility combined-cycle gas turbines that use only turbine exhaust gas to provide heat to a steam generator (waste heat boiler) or that incorporate steam generators that are not capable of being fired with more than 73 MW (250 million Btu/hr) of fossil fuel are not covered by the standards.

### *Modification/Reconstruction*

Existing facilities are only covered by these standards if they are modified or reconstructed as defined under Subpart A of 40 CFR Part 60 and this standard (Subpart Da).

Few, if any, existing facilities that change fuels, replace burners, etc. will be covered by these standards as a result of the modification/reconstruction provisions. In particular, the standards do not apply to existing facilities that are modified to fire nonfossil fuels or to

existing facilities that were designed to fire gas or oil fuels and that are modified to fire shale oil, coal/oil mixtures, coal/oil/water mixtures, solvent refined coal, liquified coal, gasified coal, or any other coal-derived fuel. These provisions were included in the proposal but have been clarified in the final standard.

**Comments on Proposal**

*Electric Utility Steam Generating Units*

The applicability requirements are basically the same as those in the proposal; electric utility steam generating units capable of firing greater than 73 MW (250 million Btu/hour) heat input of fossil fuel for which construction is commenced after September 18, 1978, are covered. Since proposal, changes have been made to specific applicability requirements for industrial cogeneration facilities, resource recovery facilities, and anthracite coal-fired facilities. These revisions are discussed later in this preamble.

Only a limited number of comments were received on the general applicability provisions. Some commenters expressed the opinion that the standards should apply to both industrial boilers and electric utility steam generating units. Industrial boilers are not covered by these standards because there are significant differences between the economic structure of utilities and the industrial sector. EPA is currently developing standards for industrial boilers and plans to propose them in 1980.

*Cogeneration Facilities*

Cogeneration facilities are covered under these standards if they have the capability of firing more than 73 MW (250 million Btu/hour) heat input of fossil fuel and are constructed for the purpose of selling more than 25 MW of electricity and more than one-third of their potential electrical output capacity. This reflects a change from the proposed standards under which facilities selling less than 25 MW of electricity through the utility power distribution system may have been covered.

A number of commenters suggested that industrial cogeneration facilities are expected to be highly efficient and that their construction could be discouraged if the proposed standards were adopted. The commenters pointed out that industrial cogeneration facilities are unusual in that a small capacity (10 MW electric output capacity, for example) steam-electric generating set may be matched with a much larger industrial steam generator (larger than 250 million Btu/hr for example). The Administrator intended that the proposed standards cover only electric generation sets that would sell more than 25 MW electrical output on the utility power distribution system. The final standards allow the sale of up to 25 MW electrical output capacity before a facility is covered. Since most industrial cogeneration units are expected to be less than 25 MW electrical output capacity, few, if any, new industrial cogeneration units will be covered by these standards. The standards do cover large electric utility cogeneration facilities because such units are fundamentally electric utility steam generating units.

Comments suggested clarifying what was meant in the proposal by the sale of more than one-third of its "maximum electrical generating capacity". Under the final standard the term "potential electric output capacity" is used in place of "maximum electrical generating capacity" and is defined as 33 percent of the steam generator heat input capacity. Thus, a steam generator with a 500 MW (1,700 million Btu/hr) heat input capacity would have a 165 MW potential electrical output capacity and could sell up to one-third of this potential output capacity on the grid (55 MW electrical output) before being covered under the standard. Under the proposal, it was unclear if the standard allowed the sale of up to one-third of the actual electric generating capacity of a facility or one-third of the potential generating capacity before being covered under the standards. The Administrator has clarified his intentions in these standards. Without this clarification the standards may have discouraged some industrial cogeneration facilities that have low in-house electrical demand.

A number of commenters suggested that emission credits should be allowed for improvements in cycle efficiency at new electric utility power plants. The commenters suggested that the use of electrical cogeneration technology and other technologies with high cycle efficiencies could result in less overall fuel consumption, which in turn could reduce overall environmental impacts through lower air emissions and less solid waste generation. The final standards do not give credit for increases in cycle efficiency because the different technologies covered by the standards and available for commercial application at this time are based on the use of conventional steam generating units which have very similar cycle efficiencies, and credits for improved cycle efficiency would not provide measurable benefits. Although the final standards do not address cycle efficiency, this approach will not discourage the application of more efficient technologies.

If a facility that is planned for construction will incorporate an innovative control technology (including electrical generation technologies with inherently low emissions or high electrical generation efficiencies) the owner or operator may apply to the Administrator under section 111(j) of the Act for an innovative technology waiver which will allow for (1) up to four years of operation or (2) up to seven years after issuance of a waiver prior to performance testing. The technology would have to have a substantial likelihood of achieving greater continuous emission reduction or achieve equivalent reductions at low cost in terms of energy, economics, or nonair quality impacts before a waiver would be issued.

*Resource Recovery Facilities*

Electric utility steam generating units incorporated into resource recovery facilities are exempt from the $SO_2$ percent reduction requirements when less than 25 percent of the heat input is from fossil fuel on a quarterly heat input basis. Such facilities are subject to all other requirements of this standard. This represents a change from the proposed regulation, under which any steam electric generating unit that combusts non-fossil fuels such as wood residue, sewage sludge, waste material, or municipal refuse would have been covered if the facility were capable of firing more than 75 MW (250 million Btu/hr) of fossil fuel.

A number of comments indicated that the proposed standard could discourage the construction of resource recovery facilities that generate electricity because of the $SO_2$ percentage reduction requirement. One commenter suggested that most new resource recovery facilities will process municipal refuse and other wastes into a dry fuel with a low-sulfur content that can be stored and subsequently fired. The commenter suggested that when firing processed refuse fuel, little if any fossil fuel will be necessary for combustion stabilization over the long term; however, fossil fuel will be necessary for startup. When a cold unit is started, 100 percent fossil fuel (oil or gas) may be fired for a few hours prior to firing 100 percent processed refuse.

Other commenters suggested that resource recovery facilities would in many cases be owned and operated by a municipality and the electricity and

steam generated would be sold by contract to offset operating costs. Under such an arrangement, commenters suggested that there may be a need to fire fossil fuel on a short-term basis when refuse is not readily available in order to generate a reliable supply of steam for the contract customer.

The Administrator accepts these suggestions and does not wish to discourage the construction of resource recovery facilities that generate electricity and/or industrial steam. For resource recovery facilities, the Administrator believes that less than 25 percent heat input from fossil fuels will be required on a long-term basis; even though 100 percent fossil fuel firing [greater than 73 MW (250 million Btu/hour)] may be necessary for startup or intermittent periods when refuse is not available. During startup such units are allowed to fire 100 percent fossil fuel because periods of startup are exempt from the standards under 40 CFR 60.8(c). If a reliable source of refuse is not available and 100 percent fossil fuel is to be fired more than 25 percent of the time, the Administrator believes it is reasonable to require such units to meet the $SO_2$ percent reduction requirements. This will allow resource recovery facilities to operate with fossil fuel up to 25 percent of the time without having to install and operate an FGD system.

*Anthracite*

These standards exempt facilities that burn anthracite alone from the percentage reduction requirements of the $SO_2$ standard but cover them under the 520 ng/J (1.2 lb/million Btu) heat input emission limitation and all requirements of the particulate matter and $NO_x$ standards. The proposed regulations would have covered anthracite in the same maner as all other coals. Since the Administrator recognized that there were arguments in favor of less stringent requirements for anthracite, this issue was discussed in the preamble to the proposed regulations.

Over 30 individuals or organizations commented on the anthracite issue. Almost all of the commenters favored exempting anthracite from the $SO_2$ percentage reduction requirement. Some of the reasons cited to justify exemption were: (1) the sulfur content of anthracite is low; (2) anthracite is more expensive to mine and burn than bituminous and will not be used unless it is cost competitive; and (3) reopening the anthracite mines will result in improvement of acid-mine-water conditions, elimination of old mining scars on the topography, eradication of dangerous fires in deep mines and culm banks, and creation of new jobs. One commenter pointed out that the average sulfur content of anthracite is 1.09 percent. Other commenters indicated that anthracite will be cleaned, which will reduce the sulfur content. One commenter opposed exempting anthracite, because it would result in more $SO_2$ emissions. Another commenter said all coal-fired power plants including anthracite-fired units should have scrubbers.

After evaluating all of the comments, the Administrator has decided to exempt facilities that burn anthracite alone from the percentage reduction requirements of the $SO_2$ standard. These facilities will be subject to all other requirements of this regulation, including the particulate matter and $NO_x$ standards, and the 520 ng/J (1.2 lb/million Btu) heat imput emission limitation under the $SO_2$ standard.

In 10 Northeastern Pennsylvania counties, where about 95 percent of the nation's anthracite coal reserves are located, approximately 40,000 acres of land have been despoiled from previous anthracite mining. The recently enacted Federal Surface Mining Control and Reclamation Act was passed to provide for the reclamation of areas like this. Under this Act, each ton of coal mined is taxed at 35 cents for strip mining and 15 cents for deep mining operations. One-half of the amount taxed is automatically returned to the State where the coal mined and one-half is to be distributed by the Department of Interior. This tax is expected to lead eventually to the reclamation of the anthracite region, but restoration will require many years. The reclamation will occur sooner if culm piles are used for fuel, the abandoned mines are reopened, and the expense of reclamation is born directly by the mine operator.

The Federal Surface Mining Control and Reclamation Act and a similar Pennsylvania law also provide for the establishment of programs to regulate anthracite mining. The State of Pennsylvania has assured EPA that total reclamation will occur if anthracite mining activity increases. They are actively pursuing with private industry the development of one area involving 12,000 to 19,600 acres of despoiled land.

In Summary, the Administrator concludes that the higher $SO_2$ emissions resulting from the use of anthracite without a flue gas desulfurization system is acceptable because of the other environmental improvements that will result. The impact of facilities using anthracite on ambient air quality will be minimized, because they will have to be reviewed to assure compliance with the prevention of significant deterioration provisions under the Act.

*Alaskan Coal*

The final standards are the same as the proposed; facilities fired with Alaskan coal are covered in the same manner as facilities fired with other coals.

Commenters suggested that problems unique to Alaska justify special provisions for facilities located in Alaska and firing Alaskan coal. Reasons cited as justification for less stringent standards by commenters on the proposal were freezing conditions, problems with sludge disposal, adverse impact of FGD on the reliability of plant operation, low-sulfur content of the coal, and cost impact on the consumer. The Administrator has examined these factors and has concluded that technically and economically feasible means are available to overcome these problems; therefore special regulatory provisions are not justified.

In reaching this conclusion the Administrator considered whether these factors demonstrated that the standards posed a substantially greater burden unique to Alaska. In other northern States where severe freezing conditions are common, plants are enclosed in buildings and insulated vessels and piping provide protection from freezing, both for scrubber operation and for liquid sludge dewatering. For an equivalent electrical generating capacity, the disposal sites for Alaskan plants could be smaller than those for most plants in the contiguous 48 States because of the lower sulfur content of Alaskan coal. Burying pipes carrying sludge to waste ponds below the frost line is feasible, except possibly in permafrost areas. The Administrator expects that future steam generators cannot be sited in permafrost areas because fly ash as well as scrubber sludge could not be properly disposed of in accordance with requirements of the Resource Recovery and Reclamation Act. In permafrost areas, turbines or other non-waste-producing processes are used or electricity is transmitted from other locations.

One commenter pointed out that failures of the FGD system would have an adverse impact on the ability to supply customers with reliable electric service, since there are no extensive interconnections with other utility companies. The Administrator has provided relief from the standards under emergency conditions that would require a choice between meeting a

power demand or complying with the standards. These emergency provisions are discussed in a subsequent section of this preamble.

Concern was expressed by the commenters that the cost impact of the standard would be excessive and that the benefits do not justify the cost, especially since Alaskan coal is among the lowest sulfur-content coal in the country. The Administrator agrees that for comparable sulfur-content coals, scrubber operating costs are slightly higher in Alaska because of the transportation costs of required materials such as lime. However, the operating costs are lower than the typical costs of FGD units controlling emissions from higher sulfur coals in the contiguous 48 States.

The Administrator considered applying a less stringent $SO_2$ standard to Alaskan coal-fired units, but concluded that there is insufficient distinction between conditions in Alaska and conditions in the northern part of the contiguous 48 States to justify such action. The Administrator has concluded that Alaskan coal-fired units should be controlled in the same manner as other facilities firing low-sulfur coal.

*Noncontinental Areas*

Facilities in noncontinental areas (State of Hawaii, the Virgin Islands, Guam, American Samoa, the Commonwealth of Puerto Rico, and the Northern Mariana Islands) are exempt from the $SO_2$ percentage reduction requirements. Such facilities are required, however, to meet the $SO_2$ emission limitations of 520 ng/J (1.2 lb/million Btu) heat input (30-day rolling average) for coal and 340 ng/J (0.8 lb/million Btu) heat input (30-day rolling average) for oil, in addition to all requirements under the $NO_x$ and particulate matter standards. This is the same as the proposed standards.

Although this provision was identified as an issue in the preamble to the proposed standards, very few comments were received on it. In general, the comments supported the proposal. The main question raised is whether Puerto Rico has adequate land available for sludge disposal.

After evaluating the comments and available information, the Administrator has concluded that noncontinental areas, including Puerto Rico, are unique and should be exempt from the $SO_2$ percentage reduction requirements.

The impact of new power plants in noncontinental areas on ambient air quality will be minimized because each will have to undergo a review to assure compliance with the prevention of significant deterioration provisions under the Clean Air Act. The Administrator does not intend to rule out the possibility that an individual BACT or LAER determination for a power plant in a noncontinental area may require scrubbing.

*Emerging Technology*

The final regulations for emerging technologies are summarized earlier in this preamble under SUMMARY OF STANDARDS and are very similar to the proposed regulations.

In general, the comments received on the proposed regulations were supportive, although a few commenters suggested some changes. A few commenters indicated that section 111(j) of the Act provides EPA with authority to handle innovative technologies. Some commenters pointed out that the proposed standards did not address certain technologies such as dry scrubbers for $SO_2$ control. One commenter suggested that SRC I should be included under the solvent refined coal rather than coal liquefaction category for purposes of allocating the 15,000 MW equivalent electrical capacity.

On the basis of the comments and public record, the Administrator believes the need still exists to provide a regulatory mechanism to allow a less stringent standard to the initial full-scale demonstration facilities of certain emerging technologies. At the time the standards were proposed, the Administrator recognized that the innovative technology waiver provisions under section 111(j) of the Act are not adequate to encourage certain capital-intensive, front-end control technologies. Under the innovative technology provisions, the Administrator may grant waivers for a period of up to 7 years from the date of issuance of a waiver or up to 4 years from the start of operation of a facility, whichever is less. Although this amount of time may be sufficient to amortize the cost of tail-gas control devices that do not achieve their design control level, it does not appear to be sufficient for amortization of high-capital-cost, front-end control technologies. The proposed provisions were designed to mitigate the potential impact on emerging front-end technologies and insure that the standards do not preclude the development of such technologies.

Changes have been made to the proposed regulations for emerging technologies relative to averaging time in order to make them consistent with the final $NO_x$ and $SO_2$ standards; however, a 24-hour averaging period has been retained for SRC-I because it has relatively uniform emission rates, which makes a 24-hour averaging period more appropriate than a 30-day rolling average.

Commercial demonstration permits establish less stringent requirements for the $SO_2$ or $NO_x$ standards, but do not exempt facilities with these permits from any other requirements of these standards.

Under the final regulations, the Administrator (in consultation with the Department of Energy) will issue commercial demonstration permits for the initial full-scale demonstration facilities of each specified technology. These technologies have been shown to have the potential to achieve the standards established for commercial facilities. If, in implementing these provisions, the Administrator finds that a given emerging technology cannot achieve the standards for commercial facilities, but it offers superior overall environmental performance (taking into consideration all areas of environmental impact, including air, water, solid waste, toxics, and land use) alternative standards can be established.

It should be noted that these permits will only apply to the application of this standard and will not supersede the new source review procedures and prevention of significant deterioration requirements under other provisions of the Act.

*Modification/Reconstruction*

The impact of the modification/reconstruction provisions is the same for the final standard as it was for the proposed standard; existing facilities are only covered by the final standards if the facilities are modified or reconstructed as defined under 40 CFR 60.14, 60.15, or 60.40a. Many types of fuel switches are expressly exempt from modification/reconstruction provisions under section 111 of the Act.

Few, if any, existing steam generators that change fuels, replace burners, etc., are expected to qualify under the modification/reconstruction provisions; thus, few, if any, existing electric utility steam generating units will become subject to these standards.

The preamble to the proposed regulations did not provide a detailed discussion of the modification/reconstruction provisions, and the comments received indicated that these provisions were not well understood by the commenters. The general modification/reconstruction provisions under 40 CFR 60.14 and 60.15 apply to all source categories covered under Part 60. Any source-specific modification/

reconstruction provisions are defined in more detail under the applicable subpart (60.40a for this standard).

A number of commenters expressly requested that fuel switching provisions be more clearly addressed by the standard. In response, the Administrator has clarified the fuel switching provisions by including them in the final standards. Under these provisions existing facilities that are converted to nonfossil fuels are not considered to have undergone modification. Similarly, existing facilities designed to fire gas or oil and that are converted to shale oil, coal/oil mixtures, coal/oil/water mixtures, solvent refined coal, liquified coal, gasified coal, or any other coal-derived fuel are not considered to have undergone modification. This was the Administrator's intention under the proposal and was mentioned in the Federal Register preamble for the proposal.

*$SO_2$ Standards*

$SO_2$ Control Technology—The final $SO_2$ standards are based on the performance of a properly designed, installed, operated and maintained FGD system. Although the standards are based on lime and limestone FGD systems, other commercially available FGD systems (e.g., Wellman-Lord, double alkali and magnesium oxide) are also capable of achieving the final standard. In addition, when specifying the form of the final standards, the Administrator considered the potential of dry $SO_2$ control systems as discussed later in this section.

Since the standards were proposed, EPA has continued to collect $SO_2$ data with continuous monitors at two sites and initiated data gathering at two additional sites. At the Conesville No. 5 plant of Columbus and Southern Ohio Electric company, EPA gathered continuous $SO_2$ data from July to December 1978. The Conesville No. 5 FGD unit is a turbulent contact absorber (TCA) scrubber using thiosorbic lime as the scrubbing medium. Two parallel modules handle the gas flow from a 411-MW boiler firing run-of-mine 4.5 percent sulfur Ohio coal. During the test period, data for only thirty-four 24-hour aver ing periods were gathered beca e of frequent boiler and scrubber outage . The Conesville system averaged 88.8 percent $SO_2$ removal, and outlet $SO_2$ emissions averaged 0.80 lb/million Btu. Monitoring of the Wellman-Lord FGD unit at Northern Indiana Public Service Company's Mitchell station during 1978 included one 41-day continuous period of operation. Data from this period were combined with previous data and analyzed. Results indicated 0.61 lb $SO_2$/million Btu and 89.2 percent $SO_2$ removal for fifty-six 24-hour periods.

From December 1978 to February 1979, EPA gathered $SO_2$ data with continuous monitors at the 10-MW prototype unit (using a TCA absorber with lime) at Tennessee Valley Authority's (TVA) Shawnee station and the Lawrence No. 4 FGD unit (using limestone) of Kansas Power and Light Company. During the Shawnee test, data were obtained for forty-two 24-hour periods in which 3.0 percent sulfur coal was fired. Sulfur dioxide removal averaged 88.6 percent. Lawrence No. 4 consists of a 125-MW boiler controlled by a spray tower limestone FGD unit. In January and February 1979, during twenty-two 24-hour periods of operation with 0.5 percent sulfur coal, the average $SO_2$ removal was 96.6 percent. The Shawnee and Lawrence tests also demonstrated that $SO_2$ monitors can function with reliabilities above 80 percent. A summary of the recent EPA-acquired $SO_2$ monitored data follows:

| Site | Scrubber | Coal sulfur, pct. | No. of 24-hour periods | Average $SO_2$ removal, pct. |
|---|---|---|---|---|
| Conesville No. 5 | Thiosorbic lime/TCA | 4.5 | 34 | 89.2 |
| NIPSCO | Wellman-Lord | 3.5 | 56 | 89.2 |
| Shawnee | Lime/TCA | 3.0 | 42 | 88.6 |
| Lawrence No. 4 | Limestone/spray tower | 0.5 | 22 | 96.6 |

Since proposing the standards, EPA has prepared a report that updates information in the earlier PEDCo report on FGD systems. The report includes listings of several new closed-loop systems.

A variety of comments were received concerning $SO_2$ control technology. Several comments were concerned with the use of data from FGD systems operating in Japan. These comments suggested that the Japanese experience shows that technology exists to obtain greater than 90 percent $SO_2$ removal. The commenters pointed out that attitudes of the plant operators, the skill of the FGD system operators, the close surveillance of power plant emissions by the Japanese Government, and technical differences in the mode of scrubber operation were primary factors in the higher FGD reliabilities and efficiencies for Japanese systems. These commenters stated that the Japanese experience is directly applicable to U.S. facilities. Other comments stated that the Japanese systems cannot be used to support standards for power plants in the U.S. because of the possible differences in factors such as the degree of closed-loop versus open-loop operation, the impact of trace constituents such as chlorides, the differences in inlet $SO_2$ concentrations, $SO_2$ uptake per volume of slurry, Japanese production of gypsum instead of sludge, coal blending and the amount of maintenance.

The comments on closed-loop operation of Japanese systems inferred that larger quantities of water are purged from these systems than from their U.S. counterparts. A closed-loop system is one where the only water leaving the system is by: (1) evaporative water losses in the scrubber, and (2) the water associated with the sludge. The administrator found by investigating the systems referred to in the comments that six of ten Japanese systems listed by one commenter and two of four coal-fired Japanese systems are operated within the above definition of closed-loop. The closed-loop operation of Japanese scrubbers was also attested to in an Interagencey Task Force Report, "Sulfur Oxides Control Technology in Japan" (June 30, 1978) prepared for Honorable Henry M. Jackson, Chairman, Senate Committee on Energy and Natural Resources. It is also important to note that several of these successful Japanese systems were designed by U.S. vendors.

After evaluating all the comments, the Administrator has concluded that the experience with systems in Japan is applicable to U.S. power plants and can be used as support to show that the final standards are achievable.

A few commenters stated that closed-loop operation of an FGD system could not be accomplished, especially at utilities burning high-sulfur coal and located in areas where rainfall into the sludge disposal pond exceeds evaporation from the pond. It is important to note that neither the proposed nor final standards require

closed-loop operation of the FGD. The commenters are primarily concerned that future water pollution regulations will require closed-loop operation. Several of these commenters ignored the large amount of water that is evaporated by the hot exhaust gases in the scrubber and the water that is combined with and goes to disposal with the sludge in a typical ponding system. If necessary, the sludge can be dewatered by use of a mechanical clarifier, filter, or centrifuge and then sludge disposed of in a landfill designed to minimize rainwater collection. The sludge could also be physically or chemically stabilized.

Most U.S. systems operate open-loop (i.e., have some water discharge from their sludge pond) because they are not required to do otherwise. In a recent report "Electric Utility Steam Generating Units—Flue Gas Desulfurization Capabilities as of October 1978" (EPA-450/3-79-001), PEDCo reported that several utilities burning both low- and high-sulfur coal have reported that they are operating closed-loop FGD systems. As discussed earlier, systems in Japan are operating closed-loop if pond disposal is included in the system. Also, experiments at the Shawnee test facility have shown that highly reliable operation can be achieved with high sulfur coal (containing moderate to high levels of chloride) during closed-loop operation. The Administrator continues to believe that although not required, closed-loop operation is technically and economically feasible if the FGD and disposal system are properly designed. If a water purge is necessary to control chloride buildup, this stream can be treated prior to disposal using commercially available water treatment methods, as discussed in the report "Controlling $SO_2$ Emissions from Coal-Fired Steam-Electric Generators: Water Pollution Impact" (EPA-600/7-78-045b).

Two comments endorsed coal cleaning as an $SO_2$ emission control technique. One commenter encouraged EPA to study the potential of coal cleaning, and another endorsed coal cleaning in preference to FGD. The Administrator investigated coal cleaning and the relative economics of FGD and coal cleaning and the results are presented in the report "Physical Coal Cleaning for Utility Boiler $SO_2$ Emission Control" (EPA-600/7-78-034). The Administrator does not consider coal cleaning alone as representing the best demonstrated system for $SO_2$ emission reduction. Coal cleaning does offer the following benefits when used in conjuction with an FGD system: (1) the $SO_2$ concentrations entering the FGD system are lower and less variable than would occur without coal cleaning, (2) percent removal credit is allowed toward complying with the $SO_2$ standard percent removal requirement, and (3) the $SO_2$ emission limit can be achieved when using a coal having a sulfur content above that which would be needed when coal cleaning is not practiced. The amount of sulfur that can be removed from coal by physical coal cleaning was investigated by the U.S. Department of the Interior ("Sulfur Reduction Potential of the Coals of the United States," Bureau of Mines Report of Investigations/1976, RI-8118). Coal cleaning principally removes pyritic sulfur from coal by crushing it to a maximum top size and then separating the pyrites and other rock impurities from the coal. In order to prevent coal cleaning processes from developing into undesirable sources of energy waste, the amount of crushing and the separation bath's specific gravity must be limited to reasonable levels. The Administrator has concluded that crushing to 1.5 inches topsize and separation at 1.6 specific gravity represents common practice. At this level, the sulfur reduction potential of coal cleaning for the Eastern Midwest (Illinois, Indiana, and Western Kentucky) and the Northern Appalachian Coal (Pennsylvania, Ohio, and West Virginia) regions averages approximately 30 percent. The washability of specific coal seams will be less than or more than the average.

Some comments state that FGD systems do not work on specific coals, such as high-sulfur Illinois-Indiana coal, high-chloride Illinois coal, and Southern Appalachian coals. After review of the comments and data, the Administrator concluded that FGD application is not limited by coal properties. Two reports, "Controlling $SO_2$ Emissions from Coal-Fired Steam-Electric Generators: Water Pollution Impact" (EPS-600/7-78-045b) and "Flue Gas Desulfurization Systems: Design and Operating Considerations" (EPA-600/7-78-030b) acknowledge that coals with high sulfur or -chloride content may present problems. Chlorides in flue gas replace active calcium, magnesium, or sodium alkalis in the FGD system solution and cause stress corrosion in susceptible materials. Prescrubbing of flue gas to absorb chlorides upstream of the FGD or the use of alloy materials and protective coatings are solutions to high-chloride coal applications. Two reports, "Flue Gas Desulfurization System Capabilities for Coal-Fired Steam Generators" (EPA-600/7-78-032b) and "Flue Gas Desulfurization Systems: Design and Operating Considerations" (EPA -600/7-7-78-030b) also acknowledge that 90 percent $SO_2$ removal (or any given level) is more difficult when burning high-sulfur coal than when burning low-sulfur coal because the mass of $SO_2$ that must be removed is greater when high-sulfur coal is burned. The increased load results in larger and more complex FGD systems (requiring higher liquid-to-gas ratios, larger pumps, etc). Operation of current FGD installations such as LaCygne with over 5 percent sulfur coal, Cane Run No. 4 on high-sulfur midwestern coal, and Kentucky Utilities Green River on 4 percent sulfur coal provides evidence that complex systems can be operated successfully on high-sulfur coal. Recent experience at TVA, Widows Creek No. 8 shows that FGD systems can operate successfully at high $SO_2$ removal efficiencies when Southern Appalachian coals are burned.

Coal blending was the subject of two comments: (1) that blending could reduce, but not eliminate, sulfur variability; and (2) that coal blending was a relatively inexpensive way to meet more relaxed standards. The Administrator believes that coal blending, by itself, does not reduce the average sulfur content of coal but reduces the variability of the sulfur content. Coal blending is not considered representative of the best demonstrated system for $SO_2$ emission reduction. Coal blending, like coal cleaning, can be beneficial to the operation of an FGD system by reducing the variability of sulfur loading in the inlet flue gas. Coal blending may also be useful in reducing short-term peak $SO_2$ concentrations where ambient $SO_2$ levels are a problem.

Several comments were concerned with the dependability of FGD systems and problems encountered in operating them. The commenters suggested that FGD equipment is a high-risk investment, and there has been limited "successful" operating experience. They expressed the belief that utilities will experience increased maintenance requirements and that the possibility of forced outages due to scaling and corrosion would be greater as a result of the standards.

One commenter took issue with a statement that exhaust stack liner problems can be solved by using more expensive materials. The commenter also argued that EPA has no data supporting the assumption that scrubbers have been demonstrated at or near 90 percent reliability with one spare module. The Administrator has considered these comments and has concluded that properly designed and operated FGD systems can perform

reliably. An FGD system is a chemical process which must be designed (1) to include materials that will withstand corrosive/erosive conditions, (2) with instruments to monitor process chemistry and (3) with spare capacity to allow for planned downtime for routine maintenance. As with any chemical process, a startup or shakedown period is required before steady, reliable operation can be achieved.

The Administrator has continued to follow the progress of the FGD systems cited in the supporting documents published in conjunction with the proposed regulations in September 1978. Availability of the FGD system at Kansas City Power and Light Company's LaCygne Unit No. 1 has steadily improved. No FGD-related forced outages were reported from September 1977 to September 1978. Availability from January to September 1978 averaged 93 percent. Outages reported were a result of boiler and turbine problems but not FGD system problems. LaCygne Unit No. 1 burns high-sulfur (5 percent) coal, uses one of the earlier FGD's installed in the U.S., and reduces $SO_2$ emissions by 80 percent with a limestone system at greater than 90 percent availability. Northern States Power Company's Sherburne Units Numbers 1 and 2 on the other hand operate on low-sulfur coal (0.8 percent). Sherburne No. 1, which began operating early in 1976, had 93 percent availability in both 1977 and 1978. Sherburne No. 2, which began operation in late 1976 had availabilities of 93 percent in 1977 and 94 percent in 1978. Both of these systems include spare modules to maintain these high availabilities.

Several comments were received expressing concern over the increased water use necessary to operate FGD systems at utilities located in arid regions. The Administrator believes that water availability is a factor that limits power plant siting but since an FGD system uses less than 10 percent of the water consumed at a power plant, FGD will not be the controlling factor in the siting of new utility plants.

A few commenters criticized EPA for not considering amendments to the Federal Water Pollution Control Act (now the Clean Water Act), the Resource Conservation and Recovery Act, or the Toxic Substances Control Act when analyzing the water pollution and solid waste impacts of FGD systems. To the extent possible, the Administrator believes that the impacts of these Acts have been taken into consideration in this rule-making. The economic impacts were estimated on the basis of requirements anticipated for power plants under these Acts.

Various comments were received regarding the $SO_2$ removal efficiency achievable with FGD technology. One comment from a major utility system stated that they agreed with the standards, as proposed. Many comments stated that technology for better than 90 percent $SO_2$ removal exists. One comment was received stating that 95 percent $SO_2$ removal should be required. The Administrator concludes that higher $SO_2$ removals are achievable for low-sulfur coal which was the basis of this comment. While 95 percent $SO_2$ removal may be obtainable on high-sulfur coals with dual alkali or regenerable FGD systems, long-term data to support this level are not available and the Administrator has concluded that the demand for dual alkali/regenerable systems would far exceed vendor capabilities. When the uncertainties of extrapolating performance from 90 to 95 percent for high-sulfur coal, or from 95 percent on low-sulfur coal to high-sulfur coal, were considered, the Administrator concluded that 95 percent $SO_2$ removal for lime/limestone based systems on high-sulfur coal could not be reasonably expected at this time.

Another comment stated that all FGD systems except lime and limestone were not demonstrated or not universally applicable. The proposed $SO_2$ standards were based upon the conclusion that they were achievable with a well designed, operated, and maintained FGD system. At the time of proposal, the Administrator believed that lime and limestone FGD systems would be the choice of most utilities in the near future but, in some instances, utilities would choose the more reactive dual alkali or regenerable systems. The use of additives such as magnesium oxides was not considered to be necessary for attainment of the standard, but could be used at the option of the utility. Available data show that greater than 90 percent $SO_2$ removal has been achieved at full scale U.S. facilities for short-term periods when high-sulfur coal is being combusted, and for long-term periods at facilities when low-sulfur coal is burned. In addition, greater than 90 percent $SO_2$ removal has been demonstrated over long-term operating periods at FGD facilities when operating on low- and medium-sulfur coals in Japan.

Other commenters questioned the exclusion of dry scrubbing techniques from consideration. Dry scrubbing was considered in EPA's background documents and was not excluded from consideration. Five commercial dry $SO_2$ control systems are currently on order; three for utility boilers (400-MW, 455-MW, and 550-MW) and two for industrial applications. The utility units are designed to achieve 50 to 85 percent reduction on a long-term average basis and are scheduled to commence operation in 1981-1982. The design basis for these units is to comply with applicable State emission limitations. In addition, dry $SO_2$ control systems for six other utility boilers are out for bid. However, no full scale dry scrubbers are presently in operation at utility plants so information available to EPA and presented in the background document dealt with prototype units. Pilot scale data and estimated costs of full-scale dry scrubbing systems offer promise of moderately high (70-85 percent) $SO_2$ removal at costs of three-fourths or less of a comparable lime or limestone FGD system. Dry control system and wet control system costs are approximately equal for a 2-percent-sulfur coal. With lower-sulfur coals, dry controls are particularly attractive, not only because they would be less costly than wet systems, but also because they are expected to require less maintenance and operating staff, have greater turndown capabilities, require less energy consumption for operation, and produce a dry solid waste material that can be more easily disposed of than wet scrubber sludge.

Tests done at the Hoot Lake Station (a 53-MW boiler) in Minnesota demonstrated the performance capability of a spray dryer-baghouse dry control system. The exhaust gas concentrations before the control systems were 800 ppm $SO_2$ and an average of 2 gr/acf particulate matter. With lime as the sorbent, the control system removed over 86 percent $SO_2$ and 99.96 percent particulate matter at a stoichiometric ratio of 2.1 moles of lime absorbent per inlet mole of $SO_2$. When the spent lime dust was recirculated from the bag filter to the lime slurry feed tank, $SO_2$ removal efficiencies up to 90 percent ware obtained at stoichiometric ratios of 1.3-1.5. With the lime recirculation process, $SO_2$ removal efficiencies of 70-80 percent were demonstrated at a more economical stoichiometric ratio (about 0.75). Similar tests were performed at the Leland Olds Station using commercial grade lime.

Based upon the available information, the Administrator has concluded that 70 percent $SO_2$ removal using lime as the reactant is technically feasible and economically attractive in comparison to wet scrubbing when coals containing less than 1.5 percent sulfur are being

combusted. The coal reserves which contain 1.5 percent sulfur or less represent approximately 90 percent of the total Western U.S. reserves.

The standards specify a percentage reduction and an emission limit but do not specify technologies which must be used. The Administrator specifically took into consideration the potential of dry $SO_2$ scrubbing techniques when specifying the final form of the standard in order to provide an opportunity for their development on low-sulfur coals.

*Averaging Time*

Compiance with the final $SO_2$ standards is based on a 30-day rolling average. Compliance with the proposed standards was based on a 24-hour average.

Several comments state that the proposed $SO_2$ percent reduction requirement is attainable using currently available control equipment. One utility company commented upon their experience with operating pilot and prototype scrubbers and a full-scale limestone FGD system on a 550-MW plant. They stated that the FGD state of the art is sufficiently developed to support the proposed standards. Based on their analysis of scrubber operating variability and coal quality variability, they indicated that to achieve an 85 percent reduction in $SO_2$ emissions 90 percent of the time on a daily basis, the 30-day average scrubber efficiency would have to be at least 88 to 90 percent.

Other comments stated that EPA contractors did not consider $SO_2$ removal in context with averaging time, that vendor guarantees were not based on specific averaging times, and that quoted $SO_2$ removal efficiencies were based on testing modules. EPA found through a survey of vendors that many would offer 90–95 percent $SO_2$ removal guarantees based upon their usual acceptance test criteria. However, the averaging time was not specified. The Industrial Gas Cleaning Institute (IGCI), which represents control equipment vendors, commented that the control equipment industry has the present capability to design, manufacture, and install FGD control systems that have the capability of attaining the proposed $SO_2$ standards (a continuous 24-hour average basis). Concern was expressed, however, about the proposed 24-hour averaging requirement, and this commenter recommended the adoption of 30-day averaging. Since minute-to-minute variations in factors affecting FGD efficiency cannot be compensated for instantaneously, 24-hour averaging is an impracticably short period for implementing effective correction or for creating offsetting favorable higher efficiency periods.

Numerous other comments were received recommending that the proposed 24-hour averaging period be changed to 30 days. A utility company stated that their experience with operating full scale FGD systems at 500- and 400-MW stations indicates that variations in FGD operation make it extremely difficult, if not impossible, to maintain $SO_2$ removal efficiencies in compliance with the proposed percent reduction on a continual daily basis. A commenter representing the industry stated that it is clear from EPA's data that the averaging time could be no shorter than 24 hours, but that neither they nor EPA have data at this time to permit a reasonable determination of what the appropriate averaging time should be.

The Administrator has thoroughly reviewed the available data on FGD performance and all of the comments received. Based on this review, he has concluded that to alleviate this concern over coal sulfur variability, particularly its effect on small plant operations, and to allow greater flexibility in operating FGD units, the final $SO_2$ standard should be based on a 30-day rolling average rather than a 24-hour average as proposed. A rolling average has been adopted because it allows the Administrator to enforce the standard on a daily basis. A 30-day average is used because it better describes the typical performance of an FGD system, allows adequate time for owners or operators to respond to operating problems affecting FGD efficiency, permits greater flexibility in procedures necessary to operate FGD systems in compliance with the standard, and can reduce the effects of coal sulfur variability on maintaining compliance with the final $SO_2$ standards without the application of coal blending systems. Coal blending systems may be required in some cases, however, to provide for the attainment and maintenance of the National Ambient Air Quality Standards for $SO_2$.

*Emission Limitation*

In the September proposal, a 520 ng/J (1.20 lb/million Btu) heat input emission limit, except for 3 days per month, was specified for solid fuels. Compliance was to be determined on a 24-hour averaging basis.

Following the September proposal, the joint working group comprised of EPA, The Department of Energy, the Council of Economic Advisors, the Council on Wage and Price Stability, and others investigated ceilings lower than the proposal. In looking at these alternatives, the intent was to take full advantage of the cost effectiveness benefits of a joint coal washing/scrubbing strategy on high-sulfur coal. The cost of washing is relatively inexpensive; therefore, the group anticipated that a low emission ceiling, which would require coal washing and 90 percent scrubbing, could substantially reduce emissions in the East and Midwest at a relatively low cost. Since coal washing is now a widespread practice, it was thought that Eastern coal production would not be seriously impacted by the lower emission limit. Analyses using an econometric model of the utility sector confirmed these conclusions and the results were published in the **Federal Register** on December 8, 1978 (43 FR 57834).

Recognizing certain inherent limitations in the model when assessing impacts at disaggregated levels, the Administrator undertook a more detailed analysis of regional coal production impacts in February using Bureau of Mines reports which provided seam-by-seam data on the sulfur content of coal reserves and the coal washing potential of those reserves. The analysis identified the amount of reserves that would require more than 90 percent scrubbing of washed coal in order to meet designated ceilings. To determine the sulfur reduction from coal washing, the Administrator assumed two levels of coal preparation technology, which were thought to represent state-of-the-art coal preparation (crushing to 1.5-inch top size with separation at 1.6 specific gravity, and ⅜-inch top size with separation at 1.6 specific gravity). The amount of sulfur reduction was determined according to chemical characteristics of coals in the reserve base. This assessment was made using a model developed by EPA's Office of Research and Development.

As a result of concerns expressed by the National Coal Association, a meeting was called for April 5, 1979, in order for EPA and the National Coal Association to present their respective findings as they pertained to potential impacts of lower emission limits on high-sulfur coal reserves in the Eastern Midwest (Illinois, Indiana, and Western Kentucky) and the Northern Appalachian (Ohio, West Virginia, and Pennsylvania) coal regions. Recognizing the importance of discussion, the Administrator invited representatives from the Sierra Club, the Natural Resources Defense Council, the Environmental Defense Fund, the Utility

Air Regulatory Group, and the United Mine Workers of America, as well as other interested parties to attend.

At the April 5 meeting, EPA presented its analysis of the Eastern Midwest and Northern Appalachian coal regions. The analysis showed that at a 240 ng/J (0.55 lb/million Btu) annual emission limit more than 90 percent scrubbing would be required on between 5 and 10 percent of Northern Appalachian reserves and on 12 to 25 percent of the Eastern Midwest reserves. At a 340 ng/J (0.80 lb/million Btu) limit, less than 5 percent of the reserves in each of these regions would require greater than 90 percent scrubbing. At that same meeting, the National Coal Association presented data on the sulfur content and washability of reserves which are currently held by member companies. While the reported National Coal Association reserves represent a very small portion of the total reserve base, they indicate reserves which are planned to be developed in the near future and provide a detailed property-by-property data base with which to compare EPA analytical results. Despite the differences in data base sizes, the National Coal Association's study served to confirm the results of the EPA analysis. Since the National Coal Association results were within 5 percentage points of EPA's estimates, the Administrator concluded that the Office of Research and Development model would provide a widely accepted basis for studying coal reserve impacts. In addition, as a result of discussions at this meeting the Administrator revised his assessment of state-of-the-art coal cleaning technology. The National Coal Association acknowledged that crushing to 1.5-inch top size with separation at 1.6 specific gravity was common practice in industry, but that crushing to smaller top sizes would create unmanageable coal handling problems and great expense.

In order to explore further the potential for dislocations in regional coal markets, the Administrator concluded that actual buying practices of utilities rather than the mere technical usability of coals should be considered. This additional analysis identified coals that might not be used because of conservative utility attitudes toward scrubbing and the degree of risk that a utility would be willing to take in buying coal to meet the emission limit. This analysis was performed in a similar manner to the analysis described above except that two additional assumptions were made: (1) utilities would purchase coal that would provide about a 10 percent margin below the emission limit in order to minimize risk, and (2) utilities would purchase coal that would meet the emission limit (with margin) with a 90 percent reduction in potential $SO_2$ emissions. This assumption reflects utility preference for buying washed coal for which only 85 percent scrubbing is needed to meet both the percent reduction and the emission limit as compared to the previous assumption that utilities would do 90 percent scrubbing on washed coal (resulting in more than 90 percent reduction in potential $SO_2$ emissions). This analysis was performed using EPA data at 430 ng/J (1.0 lb/million Btu) and 520 ng/J (1.20 lb/million Btu) monthly emission limits. The results revealed that a significant portion (up to 22 percent) of the high-sulfur coal reserves in the Eastern Midwest and portions of Northern Appalachian coal regions would require more than a 90 percent reduction if the emission limitation was established below 520 ng/J (1.20 lb/million Btu) on a 30-day rolling average basis. Although higher levels of control are technically feasible, conservatism in utility perceptions of scrubber performance could create a significant disincentive against the use of these coals and disrupt the coal markets in these regions. Accordingly, the Administrator concluded the emission limitation should be maintained at 520 ng/J (1.20 lb/million Btu) on a 30-day rolling average basis. A more stringent emission limit would be counter to one of the basic purposes of the 1977 Amendments, that is, encouraging the use of higher sulfur coals.

*Full Versus Partial Control*

In September 1978, the Administrator proposed a full or uniform control alternative and set forth other partial or variable control options as well for public comment. At that time, the Administrator made it clear that a decision as to the form of the final standard would not be made until the public comments were evaluated and additional analyses were completed. The analytical results are discussed later under Regulatory Analysis.

This issue focuses on whether power plants firing lower-sulfur coals should be required to achieve the same percentage reduction in potential $SO_2$ emissions as those burning higher-sulfur coals. When addressing this issue, the public commenters relied heavily on the statutory language and legislative history of Section 111 of the Clean Air Act Amendments of 1977 to bolster their arguments. Particular attention was directed to the Conference Report which says in the pertinent part:

> In establishing a national percent reduction for new fossil fuel-fired sources, the conferees agreed that the Administrator may, in his discretion, set a range of pollutant reduction that reflects varying fuel characteristics. Any departure from the uniform national percentage reduction requirement, however, must be accompanied by a finding that such a departure does not undermine the basic purposes of the House provision and other provisions of the act, such as maximizing the use of locally available fuels.

*Comments Favoring Full or Uniform Control.* Commenters in favor of full control relied heavily on the statutory presumption in favor of a uniform application of the percentage reduction requirement. They argued that the Conference Report language, ". . . the Administrator may, in his discretion, set a range of pollutant reduction that reflects varying fuel characteristics. . . ." merely reflects the contention of certain conferees that low-sulfur coals may be more difficult to treat than high-sulfur coals. This contention, they assert, is not borne out by EPA's technical documentation nor by utility applications for prevention of significant deterioration permits which clearly show that high removal efficiencies can be attained on low-sulfur coals. In the face of this, they maintain there is no basis for applying a lower percent reduction for such coals.

These commenters further maintain that a uniform application of the percent reduction requirement is needed to protect pristine areas and national parks, particularly in the West. In doing so, they note that emissions may be up to seven times higher at the individual plant level under a partial approach than under uniform control. In the face of this, they maintain that partial control cannot be considered to reflect best available control technology. They also contend that the adoption of a partial approach may serve to undermine the more stringent State requirements currently in place in the West.

Turning to national impacts, commenters favoring a uniform approach note that it will result in lower emissions. They maintain that these lower emissions are significant in terms of public health and that such reductions should be maximized, particularly in light of the Nation's commitment to greater coal use. They also assert that a uniform standard is clearly affordable. They point out that the incremental increase in costs associated with a uniform standard is small when compared to total utility expenditures and will have a minimal impact at the consumer level. They further maintain that EPA has inflated

the costs of scrubber technology and has failed to consider factors that should result in lower costs in future years.

With respect to the oil impacts associated with a uniform standard, these same commenters are critical of the oil prices used in the EPA analyses and add that if a higher oil price had been assumed the supposed oil impact would not have materialized.

They also maintain that the adoption of a partial approach would serve to perpetuate the advantage that areas producing low-sulfur coal enjoyed under the current standard, which would be counter to one of the basic purposes of the House bill. On the other hand, they argue, a uniform standard would not only reduce the movement of low-sulfur coals eastward but would serve to maximize the use of local high-sulfur coals.

Finally, one of the commenters specified a more stringent full control option than had been analyzed by EPA. It called for a 95 percent reduction in potential $SO_2$ emissions with about a 280 ng/J (0.65 lb/million Btu) emission limit on a monthly basis. In addition, this alternative reflected higher oil prices and declining scrubber costs with time. The results were presented at the December 12 and 13 public hearing on the proposed standards.

*Comments Favoring Partial or Variable Control.* Those commenters advocating a partial or variable approach focused their arguments on the statutory language of Section 111. They maintained that the standard must be based on the "best technological system of continuous emission reduction which (taking into consideration the cost of achieving such emission reduction, any nonair quality health and environmental impact and energy requirements) the Administrator determines has been adequately demonstrated." They also asserted that the Conference Report language clearly gives the Administrator authority to establish a variable standard based on varying fuel characteristics, i.e., coal sulfur content.

Their principal argument is that a variable approach would achieve virtually the same emission reductions at the national level as a uniform approach but at substantially lower costs and without incurring a significant oil penalty. In view of this, they maintain that a variable approach best satisfies the statutory language of Section 111.

In support of variable control they also note that the revised NSPS will serve as a minimum requirement for prevention of significant deterioration and non-attainment considerations, and that ample authority exists to impose more stringent requirements on a case-by-case basis. They contend that these authorities should be sufficient to protect pristine areas and national parks in the West and to assure the attainment and maintenance of the health-related ambient air quality standards. Finally, they note that the NSPS is technology-based and not directly related to protection of the Nation's public health.

In addition, they argue that a variable control option would provide a better opportunity for the development of innovative technologies. Several commenters noted that, in particular, a uniform requirement would not provide an opportunity for the development of dry $SO_2$ control systems which they felt held considerable promise for bringing about $SO_2$ emission reductions at lower costs and in a more reliable manner.

Commenters favoring variable control also advanced the arguments that a standard based on a range of percent reductions would provide needed flexibility, particularly when selecting intermediate sulfur content coals. Further, if a control system failed to meet design expectations, a variable approach would allow a source to move to lower-sulfur coal to achieve compliance. In addition, for low-sulfur coal applications, a variable option would substantially reduce the energy penalty of operating wet scrubbers since a portion of the flue gas could be used for plume reheat.

To support their advocacy of a variable approach, two commenters, the Department of Energy and the Utility Air Regulatory Group (UARG, representing a number of utilities), presented detailed results of analyses that had been conducted for them. UARG analyzed a standard that required a minimum reduction of 20 percent with 520 ng/J (1.20 lb/million Btu) monthly emission limit. The Department of Energy specified a partial control option that required a 33 percent minimum requirement with a 430 ng/J (1.0 lb/million Btu) monthly emission limit.

Faced with these comments, the Administrator determined the final analyses that should be performed. He concluded that analyses should be conducted on a range of alternative emission limits and percent reduction requirements in order to determine the approach which best satisfies the statutory language and legislative history of section 111. For these analyses, the Administrator specified a uniform or full control option, a partial control option reflecting the Department of Energy's recommendation for a 33 percent minimum control requirement, and a variable control option which specified a 520 ng/J (1.20 lb/million Btu) emission limitation with a 90 percent reduction in potential $SO_2$ emissions except when emissions to the atmosphere were reduced below 260 ng/J (0.60 lb/million Btu), when only a 70 percent reduction in potential $SO_2$ emissions would apply. Under the variable approach, plants firing high-sulfur coals would be required to achieve a 90 percent reduction in potential emissions in order to comply with the emission limitation. Those using intermediate and low-sulfur content coals would be permitted to achieve between 70 and 90 percent, provided their emissions were less than 260 ng/J (0.60 lb/million BTU).

In rejecting the minimum requirement of 20 percent advocated by UARG, the Administrator found that it not only resulted in the highest emissions, but that it was also the least cost effective of the variable control options considered. The more stringent full control option presented in the comments was rejected because it required a 95 percent reduction in potential emissions which may not be within the capabilities of demonstrated technology for high-sulfur coals in all cases.

*Emergency Conditions.*

The final standards allow an owner or operator to bypass uncontrolled flue gases around a malfunctioning FGD system provided (1) the FGD system has been constructed with a spare FGD module, (2) FGD modules are not available in sufficent numbers to treat the entire quantity of flue gas generated, and (3) all available electric generating capacity is being utilized in a power pool or network consisting of the generating capacity of the affected utility company (except for the capacity of the largest single generating unit in the company), and the amount of power that could be purchased from neighboring interconnected utility companies. The final standards are essentially the same as those proposed. The revisions involve wording changes to clarify the Administrator's intent and revisions to address potential load management and operating problems. None of the comments received by EPA disputed the need for the emergency condition provisions or objected to their intent.

The intent of the final standards is to encourage power plant owners and operators to install the best available FGD systems and to implement effective

operation and maintenance procedures but not to create power supply disruptions. FGD systems with spare FGD modules and FGD modules with spare equipment components have greater capability of reliable operation than systems without spares. Effective control and operation of FGD systems by engineering supervisory personnel experienced in chemical process operations and properly trained FGD system operators and maintenance staff are also important in attaining reliable FGD system operation. While the standards do not require these equipment and staffing features, the Administrator believes that their use will make compliance with the standards easier. Malfunctioning FGD systems are not exempt from the $SO_2$ standards except during infrequent power supply emergency periods. Since the exemption does not apply unless a spare module has been installed (and operated), a spare module is required for the exemption to apply. Because of the disproportionate cost of installing a spare module on steam generators having a generating capacity of 125 MW or less, the standards do not require them to have spare modules before the emergency conditions exemption applies.

The proposed standards included the requirement that the emergency condition exemption apply only to those facilities which have installed a spare FGD system module or which have 125 MW or less of output capacity. However, they did not contain procedures for demonstrating spare module capability. This capability can be easily determined once the facility commences operation. To specify how this determination is to be performed, provisions have been added to the regulations. This determination is not required unless the owner or operator of the affected facility wishes to claim spare module capability for the purpose of availing himself of the emergency condition exemption. Should the Administrator require a demonstration of spare module capability, the owner or operator would schedule a test within 60 days for any period of operation lasting from 24 hours to 30 days to demonstrate that he can attain the appropriate $SO_2$ emission control requirements when the facility is operated at a maximum rate without using one of its FGD system modules. The test can start at any time of day and modules may be rotated in and out of service, but at all times in the test period one module (but not necessarily the same module) must not be operated to demonstrate spare module capability.

Although it is within the Administrator's discretion to require the spare module capability demonstration test, the owner or operator of the facility has the option to schedule the specific date and duration of the test. A minimum of only 24 hours of operation are required during the test period because this period of time is adequate to demonstrate spare module capability and it may be unreasonable in all circumstances to require a longer (e.g., 30 days) period of operation at the facility's maximum heat input rate. Because the owner or operator has the flexibility to schedule the test, 24 hours of operation at maximum rate will not impose a significant burden on the facility.

The Administrator believes that the standards will not cause supply disruption because (1) well designed and operated FGD systems can attain high operating availability, (2) a spare FGD module can be used to rotate other modules out of service for periodic maintenance or to replace a malfunctioning module, (3) load shifting of electric generation to another generating unit can normally be used if a part or all of the FGD system were to malfunction, and (4) during abnormal power supply emergency periods, the bypassing exemption ensures that the regulations would not require a unit to stand idle if its operation were needed to protect the reliability of electric service. The Administrator believes that this exemption will not result in extensive bypassing because the probability of a major FGD malfunction and power supply emergency occurring simultaneously is small.

A commenter asked that the definition of system capacity be revised to ensure that the plant's capability rather than plant rated capacity be used because the full rated capacity is not always operable. The Administrator agrees with this comment because a component failure (e.g., the failure of one coal pulverizer) could prevent a boiler from being operated at its rated capacity, but would not cause the unit to be entirely shut down. The definition has been revised to allow use of the plant's capability when determining the net system capacity.

One commenter asked that the definition of system capacity be revised to include firm contractual purchases and to exclude firm contractual sales. Because power obtained through contractual purchases helps to satisfy load demand and power sold under contract affects the net electric generating capacity available in the system, the Administrator agrees with this request and has included power purchases in the definition of net system capacity and has excluded sales by adding them to the definition of system load.

A commenter asked that the ownership basis for proration of electric capacity in several definitions be modified when there are other contractual arrangements. The Administrator agrees with this comment and has revised the definitions accordingly.

One commenter asked that definitions describing "all electric generating equipment owned by the utility company" specifically include hydroelectric plants. The proposed definitions did include these plants, but the Administrator agrees with the clarification requested, and the definitions have been revised.

A commenter asked that the word "steam" be removed from the definition of system emergency reserves to clarify that nuclear units are included. The Administrator agrees with the comment and has revised the definition.

Several commenters asked that some type of modification be made to the emergency condition provisions that would consider projected system load increases within the next calendar day. One commenter asked that emergency conditions apply based on a projection of the next day's load. The Administrator does not agree with the suggestion of using a projected load, which may or may not materialize, as a criterion to allow bypassing of $SO_2$ emissions, because the load on a generating unit with a malfunctioning FGD system should be reduced whenever there is other available system capacity.

A commenter recommended that a unit removed from service be allowed to return to service if such action were necessary to maintain or reestablish system emergency reserves. The Administrator agrees that it would be impractical to take a large steam generating unit entirely out of service whenever load demand is expected to later increase to the level where there would be no other unit available to meet the demand or to maintain system emergency reserves. To address the problem of reducing load and later returning the load to the unit, the Administrator has revised the proposed emergency condition provisions to give an owner or operator of a unit with a malfunctioning FGD system the option of keeping (or bringing) the unit into spinning reserve when the unit is needed to maintain (or reestablish) system emergency reserves. During this

period, emissions must be controlled to the extent that capability exists within the FGD system, but bypassing emissions would be allowed when the capability of a partially or completely failed FGD system is inadequate. This procedure will allow the unit to operate in spinning reserve rather than being entirely shut down and will ensure that a unit can be quickly restored to service. The final emergency condition provisions permit bypassing of emissions from a unit kept in spinning reserve, but only (1) when the unit is the last one available for maintaining system emergency reserves, (2) when it is operated at the minimum load consistent with keeping the unit in spinning reserve, and (3) has inadequate operational FGD capability at the minimum load to completely control $SO_2$ emissions. This revision will still normally require load on a malfunctioning unit to be reduced to a minimum level, even if load demand is anticipated to increase later; but it does prevent having to take the unit entirely out of operation and keep it available in spinning reserve to assume load should an emergency arise or as load increases the following day. Because emergency condition periods are a small percentage of total operating hours, this revision to allow bypassing of $SO_2$ emissions from a unit held in spinning reserve with reduced output is expected to have minor impact on the amount of $SO_2$ emitted.

One commenter stated that the proposed provisions would not reduce the necessity for additional plant capacity to compensate for lower net reliability. The Administrator does not agree with this comment because the emergency condition provisions allow operation of a unit with a failed FGD system whenever no other generating capacity is available for operation and thereby protects the reliability of electric service. When electric load is shifted from a new steam-electric generating unit to another electric generating unit, there would be no net change in reserves within the power system. Thus, the emergency condition provisions prevent a failed FGD system from impacting upon the utility company's ability to generate electric power and prevents an impact upon reserves needed by the power system to maintain reliable electric service.

A commenter asked that the definition of available system capacity be clarified because (1) some utilities have certain localized areas or zones that, because of system operating parameters, cannot be served by all of the electric generating units which constitute the utility's system capacity, and (2) an affected facility may be the only source of supply for a zone or area. Almost all electric utility generating units in the United States are electrically interconnected through power transmission lines and switching stations. A few isolated units in the U.S. are not interconnected to at least one other electric generating unit and it is possible that a new unit could also be constructed in an isolated area where interconnections would not be practical. For a single, isolated unit where it is not practical to construct interconnections, the emergency condition provisions would apply whenever an FGD malfunction occurred because there would be no other available system capacity to which load could be shifted. It is also possible that two or three units could be interconnected, but not interconnected with a larger power network (e.g., Alaska and Hawaii). To clarify this situation, the definitions of net system capacity, system load, and system emergency reserves have been revised to include only that electric power or capacity interconnected by a network of power transmission facilities. Few units will not be interconnected into a network encompassing the principal and neighboring utility companies. Power plants, including those without FGD systems, are expected to experience electric generating malfunctions and power systems are planned with reserve generating capacity and interconnecting electric transmission lines to provide means of obtaining electricity from alternative generating facilities to meet demand when these occasions arise. Arrangements for an affected facility would typically include an interconnection to a power transmission network even when it is geographically located away from the bulk of the utility company's power system to allow purchase of power from a neighboring utility for those localized service areas when necessary to maintain service reliability. Contract arrangements can provide for trades of power in which a localized zone served by the principal company owning or operating the affected facility is supplied by a neighboring company. The power bought by the principal company can, if desired by the neighboring company, be replaced by operation of other available units in the principal company even if these units are located at a distance from the localized service zone. The proposed definition of emergency condition was contingent upon the purchase of power from another electrical generation facility. To further clarify this relationship, the Administrator has revised the proposed definitions to define the relationship between the principal company (the utility company that owns the generating unit with the malfunctioning FGD system) and the neighboring power companies for the purpose of determining when emergency conditions exist.

A commenter requested that the proposed compliance provisions be revised so that they could not be interpreted to force a utility to operate a partially functional FGD module when extensive damage to the FGD module would occur. For example, a severely vibrating fan must be shut down to prevent damage even though the FGD system may be otherwise functional. The Administrator agrees with this comment and has revised the compliance provisions not to require FGD operation when significant damage to equipment would result.

One commenter asked that the definition of system emergency reserves account for not only the capacity of the single largest generating unit, but also for reserves needed for system load-frequency regulation. Regulation of power frequency can be a problem when the mix of capacitive and reactive loads shift. For example, at night capacitive load of industrial plants can adversely affect power factors. The Administrator disagrees that additional capacity should be kept independent of the load shifting requirements. Under the definition for system emergency reserves, capacity equivalent to the largest single unit in the system was set aside for load management. If frequency regulation has been a particular problem, extra reserve margins would have been maintained by the utility company even if an FGD system were not installed. Reserve capacity need not be maintained within a single generating unit. The utility company can regulate system load-frequency by distributing their system reserves throughout the electric power system as needed. In the Administrator's judgment, these regulations do not impact upon the reserves maintained by the utility company for the purpose of maintaining power system integrity, because the emergency condition provisions do not restrict the utility company's freedom in distributing their reserves and do not require construction of additional reserves.

A commenter asked that utility operators be given the option to ignore the loss of $SO_2$ removal efficiency due to FGD malfunctions by reducing the level of electric generation from an affected unit. This would control the amount of

$SO_2$ emitted on a pounds per hour basis, but would also allow and exemption from the percentage of $SO_2$ removal specified by the $SO_2$ standards. The Administrator believes that allowing this exemption is not necessary because load can usually be shifted to other electric generating units. This procedure provides an incentive to the owner or operator to properly maintain and operate FGD systems. Under the procedures suggested by the commenter, neglect of the FGD system would be encouraged because an exemption would allow routine operation at reduced percentages of $SO_2$ removal. Steam generating units are often operated at less than rated capacity and a fully operational FGD system would not be required for compliance during these periods if this exemption were allowed. The procedure suggested by the commenter is also not necessary because FGD modules can be designed and constructed with separate equipment components so that they are routinely capable of independent operation whenever another module of the steam generating unit's FGD system is not available. Thus, reducing the level of electric generation and removing the failed FGD module for servicing would not affect the remainder of the FGD system and would permit the utility to maintain compliance with the standards without having to take the generating unit entirely out of operation. Each module should have the capability of attaining the same percentage reduction of $SO_2$ from the flue gas it treats regardless of the operability of the other modules in the system to maintain compliance with the standards. Although the efficiency of more than one FGD module may occasionally be affected by certain equipment malfunctions, a properly designed FGD system has no routine need for an exemption from the $SO_2$ percentage reduction requirement when the unit is operated at reduced load. The Administrator has concluded that the final regulations provide sufficient flexibility for addressing FGD malfunctions and that an exemption from the percentage $SO_2$ removal requirement is not necessary to protect electric service reliability or to maintain compliance with these $SO_2$ standards.

*Particulate Matter Standard*

The final standard limits particulate matter emissions to 13 ng/J (0.03 lb/million Btu) heat input and is based on the application of ESP or baghouse control technology. The final standard is the same as the proposed. The Administrator has concluded that ESP and baghouse control systems are the best demonstrated systems of continuous emission reduction (taking into consideration the cost of achieving such emission reduction, and nonair quality health and enviornmental impacts, and energy requirements) and that 13 ng/J (0.03 lb/million Btu) heat input represents the emission level achievable through the application of these control systems.

One group of commenters indicated that they did not support the proposed standard because in their opinion it would be too expensive for the benefits obtained; and they suggested that the final standard limit emissions to 43 ng/J (0.10 lb/million Btu) heat input which is the same as the current standard under 40 CFR Part 60 Subpart D. The Administrator disagrees with the commenters because the available data clearly indicate that ESP and baghouse control systems are capable of performing at the 13 ng/J (0.03 lb/million Btu) heat input emission level, and the economic impact evaluation indicates that the costs and economic impacts of installing these systems are reasonable.

The number of commenters expressed the opinion that the proposed standard was to strict, particularly for power plants firing low-sulfur coal, because baghouse control systems have not been adequately demonstrated on full-size power plants. The commenters suggested that extrapolation of test data from small scale baghhouse control systems, such as those used to support the proposed standard, to full-size utility applications is not reasonable.

The Administrator believes that baghouse control systems are demonstrated for all sizes of power plants. At the time the standards were proposed, the Administrator concluded that since baghouses are designed and constructed in modules rather than as one large unit, there should be no technological barriers to designing and constructing utility-sized facilities. The largest baghouse-controlled, coal-fired power plant for which EPA had emission test data to support the proposed standard was 44 MW. Since the standards were proposed, additional information has become available which supports the Administrator's position that baghouses are demonstrated for all sizes of power plants. Two large baghouse-controlled, coal-fired power plants have recently initiated operations. EPA has obtained emission data for one of these units. This unit has achieved particulate matter emission levels below 13 ng/J (0.03 lb/million Btu) heat input. The baghouse system for this facility has 28 modules rated at 12.5 MW capacity per module. This supports the Administrator's conclusion that baghouses are designed and constructed in modules rather than as one large unit, and there should be no technological barriers to designing and constructing utility-sized facilities.

One commenter indicated that baghouse control systems are not demonstrated for large utility application at this time and recommended that EPA gather one year of data from 1000 MW of baghouse installations to demonstrate that baghouses can operate reliably and achieve 13 ng/J (0.03 lb/million Btu) heat input. The standard would remain at 21 to 34 ng/J (0.05 to 0.08 lb/million Btu) heat input until such demonstration. The Administrator does not believe this approach is necessary because baghouse control systems have been adequately demonstrated for large utility applications.

One group of commenters supported the proposed standard of 13 ng/J (0.03 lb/million Btu) heat input. They indicated that in their opinion the proposed standard attained the proper balance of cost, energy and environmental factors and was necessary in consideration of expected growth in coal-fired power plant capacity.

Another group of commenters which included the trade association of emission control system manufacturers indicated that 13 ng/J (0.03 lb/million Btu) is technically achievable. The trade association further indicated the proposed standard is technically achievable for either high- or low-sulfur coals, through the use of baghouses, ESPs, or wet scrubbers.

A number of commenters recommended that the proposed standard be lowered to 4 ng/J (0.01 lb/million Btu) heat input. This group of commenters presented additional emission data for utility baghouse control systems to support their recommendation. The data submitted by the commenters were not available at the time of proposal and were for utility units of less than 100 MW electrical output capacity. The commenters suggested that a 4 ng/J (0.01 lb/million Btu) heat input standard is achievable based on baghouse technology, and they suggested that a standard based on baghouse technology would be consistent with the technology-forcing nature of section 111 of the Act. The Administrator believes that the available data base for baghouse performance supports a standard of 13 ng/J (0.03 lb/million Btu) heat input but

does not support a lower standard such as 4 ng/J (0.01 lb/million Btu) heat input.

One commenter suggested that the standard should be set at 26 ng/J (0.06 lb/million Btu) heat imput so that particulate matter control systems would not be necessary for oil-fired utility steam generators. Although it is expected that few oil-fired utility boilers will be constructed, the ESP performance data which is contained in the "Electric Utility Steam Generating Units, Background Information for Promulgated Emission Standards" (EPA 450/3-79-021), supports the conclusion that ESPs are applicable to both oil firing and coal firing. The Administrator believes that emissions from oil-fired utility boilers should be controlled to the same level as coal-fired boilers.

*$NO_x$* Standard

The $NO_x$ standards limit emissions to 210 ng/J (0.50 lb/million Btu) heat input from the combustion of subbituminous coal and 260 ng/J (0.60 lb/million Btu) heat imput from the combustion of bituminous coal, based on a 30-day rolling average. In addition, emission limits have been established for other solid, liquid, and gaseous fuels, as discussed in the rational section of this preamble. The final standards differ from the proposed standards only in that the final averaging time for determining compliance with the standards is based on a 30-day rolling average, whereas a 24-hour average was proposed. All comments received during the public comment period were considered in developing the final $NO_x$ standards. The major issues raised during the comment period are discussed below.

One issue concerned the possibility that the proposed 24-hour averaging period for coal might seriously restrict the flexibility boiler operators need during day-to-day operation. For example, several commenters noted that on some boilers the control of boiler tube slagging may periodically require increased excess air levels, which, in turn, would increase $NO_x$ emissions. One commenter submitted data indicating that two modern Combustion Engineering (CE) boilers at the Colstrip, Montana plant of the Montana Power Company do not consistently achieve the proposed $NO_x$ level of 210 ng/J (0.50 lb/million Btu) heat input on a 24-hour basis. The Colstrip boilers burn subbituminous coal and are required to comply with the $NO_x$ standard under 40 CFR Part 60, Subpart D of 300 ng/J (0.70 lb/million Btu) heat input. Several other commenters recommended that the 24-hour averaging period be extended to 30 days to allow for greater operational flexibility.

As an aid in evaluating the operational flexibility question, the Administrator has reviewed a total of 24 months of continuously monitored $NO_x$ data from the two Colstrip boilers. Six months of these data were available to the Administrator before proposal of these standards, and two months were submitted by a commenter. The commenter also submitted a summary of 28 months of Colstrip data indicating the number of 24-hour averages per month above 210 ng/J (0.50 lb/million Btu) heat input. The remaining Colstrip data were obtained by the Administrator from the State of Montana after proposal. In addition to the Colstrip data, the Administrator has reviewed approximately 10 months of continuously monitored $NO_x$ data from five modern CE utility boilers. Three of the boilers burn subbituminous coal, two burn bituminous coal, and all five have monitors that have passed certification tests. These data were obtained from electric utility companies after proposal. A summary of all of the continuously monitored $NO_x$ data that the Administrator has considered appears in "Electric Utility Steam Generating Units, Background Information for Promulgated Emission Standards" (EPA 450/3-79-021).

The usefulness of these continuously monitored data in evaluating the ability of modern utility boilers to continuously achieve the $NO_x$ emission limits of 210 and 260 ng/J (0.50 and 0.60 lb/million Btu) heat input is somewhat limited. This is because the boilers were required to comply with a higher $NO_x$ level of 300 ng/J (0.70 lb/million Btu) heat input. Nevertheless some conclusions can be drawn, as follows:

(1) Nearly all of the continuously monitored $NO_x$ data are in compliance with the boiler design limit of 300 ng/J (0.70 lb/million Btu) heat input on the basis of a 24-hour average.

(2) Most of the continuously monitored $NO_x$ data would be in compliance with limits of 260 ng/J (0.60 lb/million Btu) heat input for bituminous coal ov 210 ng/J (0.50 lb/million Btu) heat input for subbituminous coal when averaged over a 30-day period. Some of the data would be out of compliance based on a 24-hour average.

(3) The volume of continuously monitored $NO_x$ emission data evaluated by the Administrator (34 months from seven large coal-fired boilers) is sufficient to indicate the emission variability expected during day-to-day operation of a utility-size boiler. In the Administrator's judgment, this emission variability adequately represents slagging conditions, coal variability, load changes, and other factors that may influence the level of $NO_x$ emissions.

(4) The variability of continuously monitored $NO_x$ data is sufficient to cause some concern over the ability of a utility boiler that burns solid fuel to consistently achieve a $NO_x$ boiler design limit, whether 300, 260, or 210 ng/J (0.70, 0.60, or 0.50 lb/million Btu) heat input, based on 24-hour averages. In contrast, it appears that there would be no difficulty in achieving the boiler design limit based on 30-day periods.

Based on these conclusions, the Administrator has decided to require compliance with the final standards for solid fuels to be based on a 30-day rolling average. The Administrator believes that the 30-day rolling average will allow boilers made by all four major boiler manufacturers to achieve the standards while giving boiler operators the flexibility needed to handle conditions encountered during normal operation.

Although the Administrator has not evaluated continuously monitored $NO_x$ data from boilers manufactured by companies other than CE, the data from CE boilers are considered representative of the other boiler manufacturers. This is because the boilers of all four manufacturers are capable of achieving the same $NO_x$ design limit, and because the conditions that occur during normal operation of a boiler (e.g., slagging, variations in fuel quality, and load reductions) are similar for all four manufacturer designs. These conditions, the Administrator believes, lead to similar emission variability and require essentially the same degree of operational flexibility.

Some commenters have question the validity of the Colstrip data because the Colstrip continuous $NO_x$ monitors have not passed certification tests. In April and June of 1978 EPA conducted a detailed evaluation of these monitors. The evaluation led the Administrator to conclude that the monitors were probably biased high, but by less than 21 ng/J (0.50 lb/million Btu) heat input. Since this error is so small (less than 10 percent), the Administrator considers the data appropriate to use in developing the standards.

A number of commenters expressed concern over the ability of as many as three of the four major boiler manufacturer designs to achieve the proposed standards. Although most of the available $NO_x$ test data are from CE boilers, the Administrator believes that all four of the boiler manufacturers will be able to supply boilers capable of

achieving the standards. This conclusion is supported with (1) emission test results from 14 CE, seven Babcock and Wilcox (B&W), three Foster Wheeler (FW), and four Riley Stoker (RS) utility boilers; (2) 34 months of continuously monitored $NO_x$ emission data from seven CE boilers; and (3) an evaluation of plans under way at B&W, FW, and RS to develop low-emission burners and furnace designs. Full-scale tests of these burners and furnace designs have proven their effectiveness in reducing $NO_x$ emissions without apparent long-term adverse side effects.

Another issue raised by commenters concerned the effect that variations in the nitrogen content of coal may have on achieving the $NO_x$ standards. The Adminstrator recognizes that $NO_x$ levels are sensitive to the nitrogen content of the coal burned and that the combustion of high-nitrogen-content coals might be expected to result in higher $NO_x$ emissions than those from coals with low nitrogen contents. However, the Administrator also recognizes that other factors contribute to $NO_x$ levels, including moisture in the coal, boiler design, and boiler operating practice. In the Administrator's judgment, the emission limits for $NO_x$ are achievable with properly designed and operated boilers burning any coal, regardless of its nitrogen content. As evidence of this, three of the six boilers tested by EPA burned coals with nitrogen contents above average, and yet exhibited $NO_x$ emission levels well below the standards. The three boilers that burned coals with lower nitrogen contents also exhibited emission levels below the standards. The Administrator believes this is evidence that at $NO_x$ levels near 210 and 260 ng/J (0.50 and 0.60 lb/million Btu) heat input, factors other than fuel-nitrogen-content predominate in determining final emission levels.

A number of commenters expressed concern over the potential for accelerated tube wastage (i.e., corrosion) during operation of a boiler in compliance with the proposed standards. Almost all of the 300-hour and 30-day coupon corrosion tests conducted during the EPA-sponsored low $NO_x$ studies indicate that corrosion rate decrease or remain stable during operation of boilers at $NO_x$ levels as low as those required by the standards. In the few instances where corrosion rates increased during low-$NO_x$ operation, the increases were considered minor. Also, CE has guaranteed that its new boilers will achieve the $NO_x$ emission limits without increased tube corrosion rates. Another boiler manufacturer, B&W, has developed new low-emission burners that minimize corrosion by surrounding the flame in an oxygen-rich atmosphere. The other boiler manufacturers have also developed techniques to reduce the potential for corrosion during low-$NO_x$ operation. The Administrator has received no contrasting information to the effect that boiler tube corrosion rates would significantly increase as a result of compliance with the standards.

Several commenters stated that according to a survey of utility boilers subject to the 300 ng/J (0.70 lb/million Btu) heat input standard under 40 CFR Part 60, Subpart D, none of the boilers can achieve the standard promulgated here of 260 ng/J (0.60 lb/million Btu) heat input on a range of bituminous coals. Three of the six utility boilers tested by EPA burned bituminous coal. (Two of these boilers were manufactured by CE and one by B&W.) In addition, the Administrator has reviewed continuously monitored $NO_x$ data from two CE boilers that burn bituminous coal. Finally, the Administrator has examined $NO_x$ emission data obtained by the boiler manufacturers on seven CE, four B&W, three FW, and three RS modern boilers, all of which burn bituminous coal. Nearly all of these data are below the 260 ng/J (0.60 lb/million Btu) heat input standard. The Administrator believes that these data provide adequate evidence that the final $NO_x$ standard for bituminous coal is achievable by all four boiler manufacturer designs.

An issue raised by several commenters concerned the use of catalytic ammonia injection and advanced low-emission burners to achieve $NO_x$ emission levels as low as 15 ng/J (0.034 lb/million Btu) heat input. Since these controls are not yet available, the commenters recommended that new utility boilers be designed with sufficient space to allow for the installation of ammonia injection and advanced burners in the future. In the meantime the commenters recommended that $NO_x$ emissions be limited to 190 ng/J (0.45 lb/million Btu) heat input. The Administrator believes that the technology needed to achieve $NO_x$ levels as low as 15 ng/J (0.034 lb/million Btu) heat input has not been adequately demonstrated at this time. Although a pilot-scale catalytic-ammonia-injection system has successfully achieved 90 percent $NO_x$ removal at a coal-fired utility power plant in Japan, operation of a full-scale ammonia-injection system has not yet been demonstrated on a large coal-fired boiler. Since the Clean Air Act requires that emission control technology for new source performance standards be adequately demonstrated, the Administrator cannot justify establishing a low $NO_x$ standard based on unproven technology. Similarly, the Administrator cannot justify requiring boiler designs to provide for possible future installation of unproven technology.

The recommendation that $NO_x$ emissions be limited to 190 ng/J (0.45 lb/million Btu) heat input is based on boiler manufacturer guarantees in California. (No such utility boilers have been built as yet.) Although manufacturer guarantees are appropriate to consider when establishing emission limits, they cannot always be used as a basis for a standard. As several commenters have noted, manufacturers do not always achieve their performance guarantees. The standard is not established at this level, because emission test data are not available which demonstrate that a level of 190 ng/J (0.45 lb/million Btu) heat input can be continuously achieved without adverse side effects when a wide variety of coals are burned.

**Regulatory Analysis**

Executive Order 12044 (March 24, 1978), whose objective is to improve Government regulations, requires executive branch agencies to prepare regulatory analyses for regulations that may have major economic consequences. EPA has extensively analyzed the costs and other impacts of these regulations. These analyses, which meet the criteria for preparation of a regulatory analysis, are contained within the preamble to the proposed regulations (43 FR 42154), the background documentation made available to the public at the time of proposal (see STUDIES, 43 FR 42171), this preamble, and the additional background information document accompanying this action ("Electric Utility Steam Generating Units, Background Information for Promulgated Emission Standards," EPA-450/3-79-021). Due to the volume of this material and its continual development over a period of 2-3 years, it is not practical to consolidate all analyses into a single document. The following discussion gives a summary of the most significant alternatives considered. The rationale for the action taken for each pollutant being regulated is given in a previous section.

In order to determine the appropriate form and level of control for the standards, EPA has performed extensive analysis of the potential national impacts associated with the alternative standards. EPA employed economic models to forecast the structure and

operating characteristics of the utility industry in future years. These models project the environmental, economic, and energy impacts of alternative standards for the electric utility industry. The major analytical efforts took place in three phases as described below.

*Phase 1.* The initial effort comprised a preliminary analysis completed in April 1978 and a revised assessment completed in August 1978. These analyses were presented in the September 19, 1978 **Federal Register** proposal (43 FR 42154). Corrections to the September proposal package and additional information was published on November 27, 1978 (43 FR 55258). Further details of the analyses can be found in "Background Information for Proposed $SO_2$ Emission Standards—Supplement," EPA 450/2-78-007a-1.

*Phase 2.* Following the September 19 proposal, the EPA staff conducted additional analysis of the economic, environmental, and energy impacts associated with various alternative sulfur dioxide standards. As part of this effort, the EPA staff met with representatives of the Department of Energy, Council of Economic Advisors, Council on Wage and Price Stability, and others for the purpose of reexamining the assumptions used for the August analysis and to develop alternative forms of the standard for analysis. As a result, certain assumptions were changed and a number of new regulatory alternatives were defined. The EPA staff again employed the economic model that was used in August to project the national and regional impacts associated with each alternative considered.

The results of the phase 2 analysis were presented and discussed at the public hearings in December and were published in the **Federal Register** on December 8, 1978 (43 FR 7834).

*Phase 3.* Following the public hearings, the EPA staff continued to analyze the impacts of alternative sulfur dioxide standards. There were two primary reasons for the continuing analysis. First, the detailed analysis (separate from the economic modeling) of regional coal production impacts pointed to a need to investigate a range of higher emission limits.

Secondly, several comments were received from the public regarding the potential of dry sulfur dioxide scrubbing systems. The phase 1 and phase 2 analyses had assumed that utilities would use wet scrubbers only. Since dry scrubbing costs substantially less then wet scrubbing, adoption of the dry technology would substantially change the economic, energy, and environmental impacts of alternative sulfur dioxide standards. Hence, the phase 3 analysis focused on the impacts of alternative standards under a range of emission ceilings assuming both wet technology and the adoption of dry scrubbing for applications in which it is technically and economically feasible.

*Impacts Analyzed*

The environmental impacts of the alternative standards were examined by projecting pollutant emissions. The emissions were estimated nationally and by geographic region for each plant type, fuel type, and age category. The EPA staff also evaluated the waste products that would be generated under alternative standards.

The economic and financial effects of the alternatives were examined. This assessment included an estimation of the utility capital expenditures for new plant and pollution control equipment as well as the fuel costs and operating and maintenance expenses associated with the plant and equipment. These costs were examined in terms of annualized costs and annual revenue requirements. The impact on consumers was determined by analyzing the effect of the alternatives on average consumer costs and residential electric bills. The alternatives were also examined in terms of cost per ton of $SO_2$ removal. Finally, the present value costs of the alternatives were calculated.

The effects of the alternative proposals on energy production and consumption were also analyzed. National coal use was projected and broken down in terms of production and consumption by geographic region. The amount of western coal shipped to the Midwest and East was also estimated. In addition, utility consumption of oil and natural gas was analyzed.

*Major Assumptions*

Two types of assumptions have an important effect on the results of the analyses. The first group involves the model structure and characteristics. The second group includes the assumptions used to specify future economic conditions.

The utility model selected for this analysis can be characterized as a cost minimizing economic model. In meeting demand, it determines the most economic mix of plant capacity and electric generation for the utility system, based on a consideration of construction and operating costs for new plants and variable costs for existing plants. It also determines the optimum operating level for new and existing plants. This economic-based decision criteria should be kept in mind when analyzing the model results. These criteria imply, for example, that all utilities base decisions on lowest costs and that neutral risk is associated with alternative choices.

Such assumptions may not represent the utility decision making process in all cases. For example, the model assumes that a utility bases supply decisions on the cost of constructing and operating new capacity versus the cost of operating existing capacity. Environmentally, this implies a tradeoff between emissions from new and old sources. The cost minimization assumption implies that in meeting the standard a new power plant will fully scrub high-sulfur coal if this option is cheaper than fully or partially scrubbing low-sulfur coal. Often the model will have to make such a decision, especially in the Midwest where utilities can choose between burning local high-sulfur or imported western low-sulfur coal. The assumption of risk neutrality implies that a utility will always choose the low-cost option. Utilities, however, may perceive full scrubbing as involving more risks and pay a premium to be able to partially scrub the coal. On the other hand, they may perceive risks associated with long-range transportation of coal, and thus opt for full control even though partial control is less costly.

The assumptions used in the analyses to represent economic conditions in a given year have a significant impact on the final results reached. The major assumptions used in the analyses are shown in Table 1 and the significance of these parameters is summarized below.

The growth rate in demand for electric power is very important since this rate determines the amount of new capacity which will be needed and thus directly affects the emission estimates and the projections of pollution control costs. A high electric demand growth rate results in a larger emission reduction associated with the proposed standards and also results in higher costs.

The nuclear capacity assumed to be installed in a given year is also important to the analysis. Because nuclear power is less expensive, the model will predict construction of new nuclear plants rather than new coal plants. Hence, the nuclear capacity assumption affects the amount of new coal capacity which will be required to meet a given electric demand level. In practice, there are a number of constraints which limit the amount of nuclear capacity which can be constructed, but for this study, nuclear capacity was specified approximately

equal to the moderate growth projections of the Department of Energy.

The oil price assumption has a major impact on the amount of predicted new coal capacity, emissions, and oil consumption. Since the model makes generation decisions based on cost, a low oil price relative to the cost of building and operating a new coal plant will result in more oil-fired generation and less coal utilization. This results in less new coal capacity which reduces capital costs but increases oil consumption and fuel costs because oil is more expensive per Btu than coal. This shift in capacity utilization also affects emissions, since an existing oil plant generally has a higher emission rate than a new coal plant even when only partial control is allowed on the new plant.

Coal transportation and mine labor rates both affect the delivered price of coal. The assumed transportation rate is generally more important to the predicted consumption of low-sulfur coal (relative to high-sulfur coal), since that is the coal type which is most often shipped long distances. The assumed mining labor cost is more important to eastern coal costs and production estimates since this coal production is generally much more labor intensive than western coal.

Because of the uncertainty involved in predicting future economic conditions, the Administrator anticipated a large number of comments from the public regarding the modeling assumptions. While the Administrator would have liked to analyze each scenario under a range of assumptions for each critical parameter, the number of modeling inputs made such an approach impractical. To decide on the best assumptions and to limit the number of sensitivity runs, a joint working group was formed. The group was comprised of representatives from the Department of Energy, Council of Economic Advisors, Council on Wage and Price Stability, and others. The group reviewed model results to date, identified the key inputs, specified the assumptions, and identified the critical parameters for which the degree of uncertainty was such that sensitivity analyses should be performed. Three months of study resulted in a number of changes which are reflected in Table 1 and discussed below. These assumptions were used in both the phase 2 and phase 3 analyses.

After more evaluation, the joint working group concluded that the oil prices assumed in the phase 1 analysis were too high. On the other hand, no firm guidance was available as to what oil prices should be used. In view of this, the working group decided that the best course of action was to use two sets of oil prices which reflect the best estimates of those governmental entities concerned with projecting oil prices. The oil price sensitivity analysis was part of the phase 2 analysis which was distributed at the public hearing. Further details are available in the draft report, "Still Further Analysis of Alternative New Source Performance Standards for New Coal-Fired Power Plants (docket number IV-A-5)." The analysis showed that while the variation in oil price affected the magnitude of emissions, costs, and energy impacts, price variation had little effect on the relative impacts of the various NSPS alternatives tested. Based on this conclusion, the higher oil price was selected for modeling purposes since it paralleled more closely the middle range projections by the Department of Energy.

Reassessment of the assumptions made in the phase 1 analysis also revealed that the impact of the coal washing credit had not been considered in the modeling analysis. Other credits allowed by the September proposal, such as sulfur removed by the pulverizers or in bottom ash and flyash, were determined not to be significant when viewed at the national and regional levels. The coal washing credit, on the other hand, was found to have a significant effect on predicted emissions levels and, therefore, was factored into the analysis.

As a result of this reassessment, refinements also were made in the fuel gas desulfurization (FGD) costs assumed. These refinements include changes in sludge disposal costs, energy penalties calculated for reheat, and module sizing. In addition, an error was corrected in the calculation of partial scrubbing costs. These changes have resulted in relatively higher partial scrubbing costs when compared to full scrubbing.

Changes were made in the FGD availability assumption also. The phase 1 analysis assumed 100 percent availability of FGD systems. This assumption, however, was in conflict with EPA's estimates on module availability. In view of this, several alternatives in the phase 2 analysis were modeled at lower system availabilities. The assumed availability was consistent with a 90 percent availability for individual modules when the system is equipped with one spare. The analysis also took into consideration the emergency by-pass provisions of the proposed regulation. The analysis showed that lower reliabilities would result in somewhat higher emissions and costs for both the partial and full control cases. Total coal capacity was slightly lower under full control and slightly higher under partial control. While it was postulated that the lower reliability assumption would produce greater adverse impacts on full control than on partial control options, the relative differences in impacts were found to be insignificant. Hence, the working group discarded the reliability issue as a major consideration in the analyzing of national impacts of full and partial control options. The Administrator still believes that the newer approach better reflects the performance of well designed, operated, and maintained FGD systems. However, in order to expedite the analyses, all subsequent alternatives were analyzed with an assumed system reliability of 100 percent.

Another adjustment to the analysis was the incorporation of dry $SO_2$ scrubbing systems. Dry scrubbers were assumed to be available for both new and retrofit applications. The costs of these systems were estimated by EPA's Office of Research and Development based on pilot plant studies and contract prices for systems currently under construction. Based on economic analysis, the use of dry scrubbers was assumed for low-sulfur coal (less than 1290 ng/J or 3 lb $SO_2$/million Btu) applications in which the control requirement was 70 percent or less. For higher sulfur content coals, wet scrubbers were assumed to be more economical. Hence, the scenarios characterized as using "dry" costs contain a mix of wet and dry technology whereas the "wet" scenarios assume wet scrubbing technology only.

Additional refinements included a change in the capital charge rate for pollution control equipment to conform to the Federal tax laws on depreciation, and the addition of 100 billion tons of coal reserves not previously accounted for in the model.

Finally, a number of less significant adjustments were made. These included adjustments in nuclear capacity to reflect a cancellation of a plant, consideration of oil consumption in transporting coal, and the adjustment of costs to 1978 dollars rather than 1975 dollars. It should be understood that all reported costs include the costs of complying with the proposed particulate matter standard and $NO_x$ standards, as well as the sulfur dioxide alternatives. The model does not incorporate the Agency's PSD regulations nor

forthcoming requirements to protect visibility.

**Public Comments**

Following the September proposal, a number of comments were received on the impact analysis. A great number focused on the model inputs, which were reviewed in detail by the joint working group. Members of the joint working group represented a spectrum of expertise (energy, jobs, environment, inflation, commerce). The following paragraphs discuss only those comments addressed to parts of the analysis which were not discussed in the preceding section.

One commenter suggested that the costs of complying with State Implementation Plan (SIP) regulations and prevention of significant deterioration requirements should not be charged to the standards. These costs are not charged to the standards in the analyses. Control requirements under PSD are based on site specific, case-by-case decisions for which the standards serves as a minimum level of control. Since these judgments cannot be forecasted accurately, no additional control was assumed by the model beyond the requirements of these standards. In addition, the cost of meeting the various SIP regulations was included as a base cost in all the scenarios modeled. Thus, any forecasted cost differences among alternative standards reflect differences in utility expenditures attributable to changes in the standards only.

Another commenter believed that the time horizon for the analysis (1990/1995) was too short since most plants on line at that time will not be subject to the revised standard. Beyond 1995, our data show that many of the power plants on line today will be approaching retirement age. As utilization of older capacity declines, demand will be picked up by newer, better controlled plants. As this replacement occurs, national $SO_2$ emissions will begin to decline. Based on this projection, the Administrator believes that the 1990–1995 time frame will represent the peak years for $SO_2$ emissions and is, therefore, the relevant time frame for this analysis.

Use of a higher general inflation rate was suggested by one commenter. A distinction must be made between general inflation rates and real cost escalation. Recognizing the uncertainty of future inflation rates, the EPA staff conducted the economic analysis in a manner that minimized reliance on this assumption. All construction, operating, and fuel costs were expressed as constant year dollars and therefore the analysis is not affected by the inflation rate. Only real cost escalation was included in the economic analysis. The inflation rates will have an impact on the present value discount rate chosen since this factor equals the inflation rate plus the real discount rate. However, this impact is constant across all scenarios and will have little impact on the conclusions of the analysis.

Another commenter opposed the presentation of economic impacts in terms of monthly residential electric bills, since this treatment neglects the impact of higher energy costs to industry. The Administrator agrees with this comment and has included indirect consumer impacts in the analysis. Based on results of previous analysis of the electric utility industry, about half of the total costs due to pollution control are felt as direct increases in residential electric bills. The increased costs also flow into the commercial and industrial sectors where they appear as increased costs of consumer goods. Since the Administrator is unaware of any evidence of a multiplier effect on these costs, straight cost pass through was assumed. Based on this analysis, the indirect consumer impacts (Table 5) were concluded to be equal to the monthly residential bills ("Economic and Financial Impacts of Federal Air and Water Pollution Controls on the Electric Utility Industry," EPA-230/3-76/013, May 1976).

One utility company commented that the model did not adequately simulate utility operation since it did not carry out hour-by-hour dispatch of generating units. The model dispatches by means of load duration curves which were developed for each of 35 demand regions across the United States. Development of these curves took into consideration representative daily load curves, traditional utility reserve margins, seasonal demand variations, and historical generation data. The Administrator believes that this approach is adequate for forecasting long-term impacts since it plans for meeting short-term peak demand requirements.

**Summary of Results**

The final results of the analyses are presented in Tables 2 through 5 and discussed below. For the three alternative standards presented, emission limits and percent reduction requirements are 30-day rolling averages, and each standard was analyzed with a particulate standard of 13 ng/J (0.03 lb/million Btu) and the proposed $NO_x$ standards. The full control option was specified as a 520 ng/J (1.2 lb/million Btu) emission limit with a 90 percent reduction in potential $SO_2$ emissions. The other options are the same as full control except when the emissions to the atmosphere are reduced below 260 ng/J (0.6 lb/million Btu) in which case the minimum percent reduction requirement is reduced. The variable control option requires a 70 percent minimum reduction and the partial control option has a 33 percent minimum reduction requirement. The impacts of each option were forecast first assuming the use of wet scrubbers only and then assuming introduction of dry scrubbing technology. In contrast to the September proposal which focused on 1990 impacts, the analytical results presented today are for the year 1995. The Administrator believes that 1995 better represents the differences among alternatives since more new plants subject to the standard will be on line by 1995. Results of the 1990 analyses are available in the public record.

**Wet Scrubbing Results**

The projected $SO_2$ emissions from utility boilers are shown by plant type and geographic region in Tables 2 and 3. Table 2 details the 1995 national $SO_2$ emissions resulting from different plant types and age groups. These standards will reduce 1995 $SO_2$ emissions by about 3 million tons per year (13 percent) as compared to the current standards. The emissions from new plants directly affected by the standards are reduced by up to 55 percent. The emission reduction from new plants is due in part to lower emission rates and in part to reduced coal consumption predicted by the model. The reduced coal consumption in new plants results from the increased cost of constructing and operating new coal plants due to pollution controls. With these increased costs, the model predicts delays in construction of new plants and changes in the utilization of these plants after start-up. Reduced coal consumption by new plants is accompanied by higher utilization of existing plants and combustion turbines. This shift causes increased emissions from existing coal- and oil-fired plants, which partially offsets the emission reductions achieved by new plants subject to the standard.

Projections of 1995 regional $SO_2$ emissions are summarized in Table 3. Emissions in the East are reduced by about 10 to 13 percent as compared to predictions under the current standards, whereas Midwestern emissions are reduced only slightly. The smaller reductions in the Midwest are due to a slow growth of new coal-fired capacity.

In general, introductions of coal-fired capacity tends to reduce emissions since new coal plants replace old coal- and oil-fired units which have higher emission rates. The greatest emission reduction occurs in the West and West South Central regions where significant growth is expected and today's emissions are relatively low. For these two regions combined, the full control option reduces emissions by 40 percent from emission levels under the current standards, while the partial and variable options produce reductions of about 30 percent.

Table 4 illustrates the effect of the proposed standards on 1995 coal production, western coal shipped east, and utility oil and gas consumption. National coal production is predicted to triple by 1995 under all the alternative standards. This increased demand raises production in all regions of the country as compared to 1975 levels. Considering these major increases in national production, the small production variations among the alternatives are not large. Compared to production under the current standards, production is down somewhat in the West, Northern Great Plains, and Appalachia, while production is up in the Midwest. These shifts occur because of the reduced economic advantage of low-sulfur coals under the revised standards. While three times higher than 1975 levels, western coal shipped east is lower under all options than under the current standards.

Oil consumption in 1975 was 1.4 million barrels per day. The 3.1 million barrels per day figure for 1975 consumption in Table 4 includes utility natural gas consumption (equivalent of 1.7 million barrels per day) which the analysis assumed would be phased out by 1990. Hence, in 1995, the 1.4 million barrel per day projection under current standards reflects retirement of existing oil capacity and offsetting increases in consumption due to gas-to-oil conversions.

Oil consumption by utilities is predicted to increase under all the options. Compared to the current standards, increased consumption is 200,000 barrels per day under the partial and variable options and 400,000 barrels per day under full control. Oil consumption differences are due to the higher costs of new coal plants under these standards, which causes a shift to more generation from existing oil plants and combustion turbines. This shift in generation mix has important implications for the decision-making process, since the only assumed constraint to utility oil use was the price. For example, if national energy policy imposes other constraints which phase out or stabilize oil use for electric power generation, then the differences in both oil consumption and oil plant emissions (Table 2) across the various standards will be mitigated. Constraining oil consumption, however, will spread cost differences among standards.

The economic effects in 1995 are shown in Table 5. Utility capital expenditures increase under all options as compared to the $770 billion estimated to be required through 1995 in the absence of a change in the standard. The capital estimates in Table 5 are increments over the expenditures under the current standard and include both plant capital (for new capacity) and pollution control expenditures. As shown in Table 2, the model estimates total industry coal capacity to be about 17 GW (3 percent) greater under the non-uniform control options. The cost of this extra capacity makes the total utility capital expenditures higher under the partial and variable options, than under the full control option, even though pollution control capital is lower.

Annualized cost includes levelized capital charges, fuel costs, and operation and maintenance costs associated with utility equipment. All of the options cause an increase in annualized cost over the current standards. This increase ranges from a low of $3.2 billion for partial control to $4.1 billion for full control, compared to the total utility annualized costs of about $175 billion.

The average monthly bill is determined by estimating utility revenue requirements which are a function of capital expenditures, fuel costs, and operation and maintenance costs. The average bill is predicted to increase only slightly under any of the options, up to a maximum 3-percent increase shown for full control. Over half of the large total increase in the average monthly bill over 1975 levels ($25.50 per month) is due to a significant increase in the amount of electricity used by each customer. Pollution control expenditures, including those to meet the current standards, account for about 15 percent of the increase in the cost per kilowatt-hour while the remainder of the cost increase is due to capital intensive capacity expansion and real escalations in construction and fuel cost.

Indirect consumer impacts range from $1.10 to $1.60 per month depending on the alternative selected. Indirect consumer impacts reflect increases in consumer prices due to the increased energy costs in the commercial and industrial sectors.

The incremental costs per ton of $SO_2$ removal are also shown in Table 5. The figures are determined by dividing the change in annualized cost by the change in annual emissions, as compared to the current standards. These ratios are a measure of the cost effectiveness of the options, where lower ratios represent a more efficient resource allocation. All the options result in higher cost per ton than the current standards with the full control option being the most expensive.

Another measure of cost effectiveness is the average dollar-per-ton cost at the plant level. This figure compares total pollution control cost with total $SO_2$ emission reduction for a model plant. This average removal cost varies depending on the level of control and the coal sulfur content. The range for full control is from $325 per ton on high-sulfur coal to $1,700 per ton on low-sulfur coal. On low-sulfur coals, the partial control cost is $2,000 per ton, and the variable cost is $1,700 per ton.

The economic analyses also estimated the net present value cost of each option. Present value facilitates comparison of the options by reducing the streams of capital, fuel, and operation and maintenance expenses to one number. A present value estimate allows expenditures occurring at different times to be evaluated on a similar basis by discounting the expenditures back to a fixed year. The costs chosen for the present value analysis were the incremental utility revenue requirements relative to the current NSPS. These revenue requirements most closely represent the costs faced by consumers. Table 5 shows that the present value increment for 1995 capacity is $41 billion for full control, $37 billion for variable control, and $32 billion for partial control.

**Dry Scrubbing Results**

Tables 2 through 5 also show the impacts of the options under the assumption that dry $SO_2$ scrubbing systems penetrate the pollution control market. These analyses assume that utilities will install dry scrubbing systems for all applications where they are technologically feasible and less costly than wet systems. (See earlier discussion of assumptions.)

The projected $SO_2$ emissions from utility boilers are shown by plan type and geographic region in Tables 2 and 3. National emission projections are similar to the wet scrubbing results. Under the dry control assumption, however, the variable control option is predicted to have the lowest national

emissions primarily due to lower oil plant emissions relative to the full control option. Partial control produces more emissions than variable control because of higher emissions from new plants. Compared to the current standards, regional emission impacts are also similar to the wet scrubbing projections. Full control results in the lowest emissions in the West, while variable control results in the lowest emissions in the East. Emissions in the Midwest and West South Central are relatively unaffected by the options.

Inspection of Tables 2 and 3 shows that with the dry control assumption the current standard, full control, and partial control cases produce slightly higher emissions than the corresponding wet control cases. This is due to several factors, the most important of which is a shift in the generation mix. This shift occurs because dry scrubbers have lower capital costs and higher variable costs than wet scrubbers and, therefor, the two systems have different effects on the plant utilization rates. The higher variable costs are due primarily to transportation charges on intermediate to low sulfur coal which must be used with dry scrubbers. The increased variable cost of dry controls alters the dispatch order of existing plants so that older, uncontrolled plants operate at relatively higher capacity factors than would occur under the wet scrubbing assumption, hence increasing total emissions. Another factor affecting emissions is utility coal selection which may be altered by differences in pollution control costs.

Table 4 shows the effect to the proposed standards on fuels in 1995. National coal production remains essentially the same whether dry or wet controls are assumed. However, the use of dry controls causes a slight reallocation in regional coal production, except under a full control option where dry controls cannot be applied to new plants. Under the variable and partial options Appalachian production increases somewhat due to greater demand for intermediate sulfur coals while Midwestern coal production declines slightly. The non-uniform options also result in a small shifting in the western regions with Northern Great Plains production declining and production in the rest of West increasing. The amount of western coal shipped east under the current standard is reduced from 122 million to 99 million tons (20% decrease) due to the increased use of eastern intermediate sulfur coals for dry scrubbing applications. Western coal shipped east is reduced further by the revised standards, to a low of 55 million tons under full control. Oil impacts under the dry control assumption are identical to the wet control cases, with full control resulting in increased consumption of 200 thousand barrels per day relative to the partial and variable options.

The 1995 economic effects of these standards are presented in Table 5. In general, the dry control assumption results in lower costs. However, when comparing the dry control costs to the wet control figures it must be kept in mind that the cost base for comparison, the current standards, is different under the dry control and wet control assumptions. Thus, while the incremental costs of full control are higher under the dry scrubber assumption the total costs of meeting the standard is lower than if wet controls were used.

The economic impact figures show that when dry controls are assumed the cost savings associated with the variable and partial options is significantly increased over the wet control cases. Relative to full control the partial control option nets a savings of $1.4 billion in annualized costs which equals a $14 billion net present value savings. Variable control results in a $1.1 billion annualized cost savings which is a savings of $12 billion in net present value. These changes in utility costs affect the average residential bill only slightly, with partial control resulting in a savings of $.50 per month and variable control savings of $.40 per month on the average bill, relative to full control.

**Conclusions**

One finding that has been clearly demonstrated by the two years of analysis is that lower emission standards on new plants do not necessarily result in lower national $SO_2$ emissions when total emissions from the entire utility system are considered. There are two reasons for this finding. First, the lowest emissions tend to result from strategies that encourage the construction of new coal capacity. This capacity, almost regardless of the alternative analyzed, will be less polluting than the existing coal- or oil-fired capacity that it replaces. Second, the higher cost of operating the new capacity (due to higher pollution costs) may cause the newer, cleaner plants to be utilized less than they would be under a less stringent alternative. These situations are demonstrated by the analyses presented here.

The variable control option produces emissions that are equal to or lower than the other options under both the wet and dry scrubbing assumptions. Compared to full control, variable control is predicted to result in 12 GW to 17 GW more coal capacity. This additional capacity replaces dirtier existing plants and compensates for the slight increase in emissions from new plants subject to the standards, hence causing emissions to be less than or equal to full control emissions depending on scrubbing cost assumption (i.e., wet or dry). Partial control and variable control produce about the same coal capacity, but the additional 300 thousand ton emission reduction from new plants causes lower total emissions under the variable option. Regionally, all the options produce about the same emissions in the Midwest and West South Central regions. Full control produces 200 thousands tons less emissions in the West than the variable option and 300 thousand tons less than partial control. But the variable and partial options produce between 200 and 300 thousand tons less emissions in the East.

The variable and partial control options have a clear advantage over full control with respect to costs under both the wet and dry scrubbing assumptions. Under the dry assumption, which the Administrator believes represents the best prediction of utility behavior, variable control saves about $1.1 billion per year relative to full control and partial control saves an additional $0.3 billion.

All the options have similar impacts on coal production especially when considering the large increase predicted over 1975 production levels. With respect to oil consumption, however, the full control option causes a 200,000 barrel per day increase as compared to both the partial and variable options.

Based on these analyses, the Administrator has concluded that a non-uniform control strategy is best considering the environmental, energy, and economic impacts at both national and regional levels. Compared to other options analyzed, the variable control standard presented above achieves the lowest emissions in an efficient manner and will not disrupt local or regional coal markets. Moreover, this option avoids the 200 thousand barrel per day oil penalty which has been predicted under a number of control options. For these reasons, the Administrator believes that the variable control option provides the best balance of national environmental, energy, and economic objectives.

Table 1.—*Key Modeling Assumptions*

| Assumption | |
|---|---|
| Growth rates | 1975–1985: 4.8%/yr.<br>1985–1995: 4.0%. |
| Nuclear capacity | 1985: 97 GW.<br>1990: 165.<br>1995: 228. |
| Oil prices ($ 1975) | 1985: $12.90/bbl.<br>1990: $16.40.<br>1995: $21.00. |
| Coal transportation | 1% per year real increase. |
| Coal mining labor costs | U.M.W. settlement and 1% real increase thereafter. |
| Capital charge rate | 12.5% for pollution control expenditures. |
| Cost reporting base | 1978 dollars. |
| FGD costs | No change from phase 2 analysis except for the addition of dry scrubbing systems for certain applications. |
| Coal cleaning credit | 5%–35% $SO_2$ reduction assumed for high sulfur bituminous coals only. |
| Bottom ash and fly ash content | No credit assumed. |

Table 2.—*National 1995 $SO_2$ Emissions From Utility Boilers* [a]

(Million tons)

| Plant category | Level of control [b] | | | | | | | | |
|---|---|---|---|---|---|---|---|---|---|
| | 1975 actual | Current standards | | Full control | | Partial control 33% minimum[h] | | Variable control 70% minimum | |
| | | Wet [c] | Dry [d] | Wet | Dry | Wet | Dry | Wet | Dry |
| SIP/NSPS Plants [e] | | 15.5 | 15.8 | 16.0 | 16.2 | 15.9 | 16.2 | 16.0 | 16.1 |
| New Plants [f] | | 7.1 | 7.0 | 3.1 | 3.1 | 3.6 | 3.4 | 3.3 | 3.1 |
| Oil Plants | | 1.0 | 1.0 | 1.4 | 1.4 | 1.3 | 1.2 | 1.3 | 1.2 |
| Total National Emissions | 18.6 | 23.7 | 23.8 | 20.6 | 20.7 | 20.8 | 20.9 | 20.6 | 20.5 |
| Total Coal Capacity (GW) | 205 | 552 | 564 | 521 | 520 | 534 | 537 | 533 | 537 |
| Sludge generated (million tons dry) | | 23 | 27 | 55 | 56 | 43 | 39 | 50 | 41 |

[a] Results of joint EPA/DOE analyses completed in May 1979 based on oil prices of $12.90, $16.40, and $21.00/bbl in the years 1985, 1990, and 1995, respectively
[b] With 520 ng/J maximum emission limit.
[c] Plants subject to existing State regulations or the current NSPS of 1.2 lb $SO_2$/million BTU.
[d] Based on wet $SO_2$ scrubbing costs.
[e] Based on dry $SO_2$ scrubbing costs where applicable
[f] Plants subject to the revised standards.

Table 3.—*Regional 1995 $SO_2$ Emissions From Utility Boilers* [a]

(Million tons)

| | Level of control [b] | | | | | | | | |
|---|---|---|---|---|---|---|---|---|---|
| | 1975 actual | Current standards | | Full control | | Partial control 33% minimum | | Variable control 70% minimum | |
| | | Wet [c] | Dry [d] | Wet | Dry | Wet | Dry | Wet | Dry |
| Total National Emissions | 18.6 | 23.7 | 23.8 | 20.6 | 20.7 | 20.8 | 20.9 | 20.6 | 20.5 |
| Regional Emissions. | | | | | | | | | |
| East [e] | | 11.2 | 11.2 | 10.1 | 10.1 | 9.8 | 9.8 | 9.8 | 9.7 |
| [illegible] West [f] | | 8.1 | 8.3 | 7.9 | 7.9 | 7.9 | 8.0 | 7.9 | 8.0 |
| [illegible] South Central [g] | | 2.6 | 2.6 | 1.7 | 1.7 | 1.8 | 1.8 | 1.8 | 1.7 |
| [illegible] [h] | | 1.7 | 1.7 | 0.9 | 0.9 | 1.2 | 1.2 | 1.1 | 1.1 |
| Total Coal Capacity (GW) | 205 | 552 | 554 | 521 | 520 | 534 | 537 | 533 | 537 |

[a] Results of joint EPA/DOE analyses completed in May 1979 based on oil prices of $12.90, $16.40, and $21.00/bbl in the years 1985, 1990, and 1995, respectively
[b] With 520 ng/J maximum emission limit.
[c] Based on wet $SO_2$ scrubbing costs.
[d] Based on dry $SO_2$ scrubbing costs where applicable
[e] New England, Middle Atlantic, South Atlantic, and East South Central Census Regions.
[f] East North Central and West North Central Census Regions.
[g] West South Central Census Region
[h] Mountain and Pacific Census Regions.

## Performance Testing

### *Particulate Matter*

The final regulations require that Method 5 or 17 under 40 CFR Part 60, Appendix A, be used to determine compliance with the particulate matter emission limit. Particulate matter may be collected with Method 5 at an outstack filter temperature up to 160 C (320 F); Method 17 may be used when stack temperatures are less than 160 C (320 F). Compliance with the opacity standard in the final regulation is determined by means of Method 9, under 40 CFR Part 60, Appendix A. A transmissometer that meets Performance Specification 1 under 40 CFR Part 60, Appendix B is required.

Several comments were received which questioned the accuracy of Methods 5 and 17 when used to measure particulate matter at the level of the standard. The accuracy of Methods 5 and 17 is dependent on the amount of sample collected and not the concentration in the gas stream. To maintain an accuracy comparable to the accuracy obtained when testing for mass emission rates higher than the standard, it is necessary to sample for longer times. For this reason, the regulation requires a minimum sampling time of 120 minutes and a minimum sampling volume of 1.7 dscm (60 dscf).

Three comments raised the issue of potential interference of acid mist with the measurement of particulate matter. The Administrator recognized this issue prior to proposal of the regulations. In the preamble to the proposed regulations, the Administrator indicated that investigations would continue to determine the extent of the problem. A series of tests at an FGD-equipped facility burning 3-percent-sulfur coal indicate that the amount of sample collected using Method 5 precedures is temperature sensitive over the range of filter temperatures used (250° F to 380° F), with reduced weights at higher temperatures. Presumably, the decreased weight at higher filter temperatures reflect vaporization of acid mist. Recently received particulate emission data using Method 5 at 32° F for a second coal-fired power plant equipped with an electrostatic precipitator and an FGD system apparently conflicts with the data generated by EPA. For this plant, particulate matter was measured at 0.02 lbs/million Btu. It is not known what portion of this particulate matter, if any was attributable to sulfuric acid mist.

The intent of the particulate matter standard is to insure the installation, operation, and maintenance of a good

**Table 4**—*Impacts on Fuels in 1995*[a]

| | 1975 actual | Level of control[b] | | | | | | | |
|---|---|---|---|---|---|---|---|---|---|
| | | Current standards | | Full control | | Partial control 33% minimum | | Variable control 70% minimum | |
| | | *Wet*[c] | *Dry*[d] | *Wet* | *Dry* | *Wet* | *Dry* | *Wet* | *Dry* |
| U.S. Coal Production (million tons): | | | | | | | | | |
| Appalachia | 398 | 489 | 524 | 463 | 465 | 475 | 486 | 470 | 484 |
| Midwest | 151 | 404 | 391 | 487 | 488 | 456 | 452 | 465 | 450 |
| Northern Great Plains | 54 | 655 | 630 | 633 | 628 | 622 | 576 | 632 | 602 |
| West | 46 | 230 | 222 | 182 | 180 | 212 | 228 | 203 | 217 |
| Total | 647 | 1,778 | 1,767 | 1,765 | 1,761 | 1,765 | 1,742 | 1,770 | 1,752 |
| Western Coal Shipped East (million tons) | 21 | 122 | 99 | 59 | 55 | 68 | 59 | 71 | 70 |
| Oil Consumption by Power Plants (million bbl/day): | | | | | | | | | |
| Power Plants | | 1.2 | 1.2 | 1.6 | 1.6 | 1.4 | 1.4 | 1.4 | 1.4 |
| Coal Transportation | | 0.2 | 0.2 | 0.2 | 0.2 | 0.2 | 0.2 | 0.2 | 0.2 |
| Total | 3.1 | 1.4 | 1.4 | 1.8 | 1.8 | 1.6 | 1.6 | 1.6 | 1.6 |

[a] Results of EPA analyses completed in May 1979 based on oil prices of $12.90, $16.40, and $21.00/bbl in the years 1985, 1990, and 1995, respectively.
[b] With 520ng/J maximum emission limit.
[c] Based on wet $SO_2$ scrubbing costs.
[d] Based on dry $SO_2$ scrubbing where applicable.

**Table 5.**—*1995 Economic Impacts*[a]

[1978 dollars]

| | Level of control[b] | | | | | | | |
|---|---|---|---|---|---|---|---|---|
| | Current standards | | Full control | | Partial control 33% minimum | | Variable control 70% minimum | |
| | *Wet*[c] | *Dry*[d] | *Wet* | *Dry* | *Wet* | *Dry* | *Wet* | *Dry* |
| Average Monthly Residential Bills ($/month) | $53.00 | $52.85 | $54.50 | $54.45 | $54.15 | $53.95 | $54.30 | $54.05 |
| Indirect Consumer Impacts ($/month) | | | 1.50 | 1.60 | 1.15 | 1.10 | 1.30 | 1.20 |
| Incremental Utility Capital Expenditures, Cumulative 1976–1995 ($ billions) | | | 4 | 5 | 6 | -3 | 10 | -1 |
| Incremental Annualized Cost ($ billions) | | | 4.1 | 4.4 | 3.2 | 3.0 | 3.6 | 3.3 |
| Present Value of Incremental Utility Revenue Requirements ($ billions) | | | 41 | 45 | 32 | 31 | 37 | 33 |
| Incremental Cost of $SO^2$ Reduction ($/ton) | | | 1,322 | 1,428 | 1,094 | 1,012 | 1,163 | 1,036 |

[a] Results of EPA analyses completed in May 1979 based on oil prices of $12.90, $16.40, and $21.00/bbl in the years 1985, 1990, and 1995, respectively.
[b] With 520 ng/J maximum emission limit.
[c] Based on wet $SO_2$ scrubbing costs.
[d] Based on dry $SO_2$ scrubbing costs where applicable.

emission control system. Since technology is not available for the control of sulfuric acid mist, which is condensed in the FGD system, the Administrator does not believe the particulate matter sample should include condensed acid mist. The final regulation, therefore, allows particulate matter testing for compliance between the outlet of the particulate matter control device and the inlet of a wet FGD system. EPA will continue to investigate revised procedures to minimize the measurement of acid mist by Methods 5 or 17 when used to measure particulate matter after the FGD system. Since technology is available to control particulate sulfate carryover from an FGD system, and the Administrator believes good mist eliminators should be included with all FGD systems, the regulations will be amended to require particulate matter measurement after the FGD system when revised procedures for Methods 5 or 17 are available.

*$SO_2$ and $NO_x$*

The final regulation requires that compliance with the sulfur dioxide and nitrogen oxides standards be determined by using continuous monitoring systems (CMS) meeting Performance Specifications 2 and 3, under 40 CFR Part 60, Appendix B. Data from the CMS are used to calculate a 30-day rolling average emission rate and percentage reduction (sulfur dioxide only) for the initial performance test required under 40 CFR 60.8. At the end of each boiler operating day after the initial performance test a new 30-day rolling average emission rate for sulfur dioxide and nitrogen oxides and an average percent reduction for sulfur dioxide are determined. The final regulations specify the minimum amount of data that must be obtained for each 30 successive boiler operating days but requires the calculation of the average emission rate and percentage reduction based on all available data. The minimum data requirements can be satisfied by using the Reference Methods or other approved alternative methods when the CMS, or components of the system, are inoperative.

The final regulation requires operation of the continuous monitors at all times, including periods of startup, shutdown, malfunction ($NO_x$ only), and emergency conditions ($SO_2$ only), except for those periods when the CMS is inoperative because of malfunctions, calibration or span checks.

The proposed regulations would have required that compliance be based on the emission rate and percent reduction

(sulfur dioxide only) for each 24-hour period of operation. Continual determination of compliance with the proposed standard would have necessitated that each source owner or operator install redundant CMS or conduct manual testing in the event of CMS malfunction.

Comments on the proposed testing requirements for sulfur dioxide and nitrogen oxides indicated that CMS could not operate without malfunctions; therefore, every facility would require redundant CMS. One commenter calculated that seven CMS would be needed to provide the required data. Comments also questioned the practicality and feasibility of obtaining around-the-clock emissions data by means of manual testing in the event of CMS malfunction. The commenter stated that the need for immediate backup testing using manual methods would require a stand-by test team at all times and that extreme weather conditions or other circumstances could often make it impossible for the test team to obtain the required data. The Administrator agrees with these comments and has redefined the data requirements to reflect the performance that can be achieved with one well-maintained CMS. The final requirements are designed to eliminate the need for redundant CMS and minimize the possibility that manual testing will be necessary, while assuring acquisition of sufficient data to document compliance.

Compliance with the emission limitations for sulfur dioxide and nitrogen oxides and the percentage reduction for sulfur dioxide is determined from all available hourly averages, except for periods of startup, shutdown, malfunction or emergency conditions for each 30 successive boiler operating days. Minimum data requirements have been established for hourly averages, for 24-hour periods, and for the 30 successive boiler operating days. These minimum requirements eliminate the need for redundant CMS and minimize the need for testing using manual sampling techniques. The minimum requirements apply separately to inlet and outlet monitoring systems.

The regulation allows calculation of hourly averages for the CMS using two or more of the required four data points. This provision was added to accommodate those monitors for which span and calibration checks and minor repairs might require more than 15 minutes.

For any 24-hour period, emissions data must be obtained for a minimum of 75 percent of the hours during which the affected facility is operated (including startup, shutdown, malfunctions or emergency conditions). This provision was added to allow additional time for CMS calibrations and to correct minor CMS problems, such as a lamp failure, a plugged probe, or a soiled lens. Statistical analyses of data obtained by EPA show that there is no significant difference (at the 95 percent confidence interval) between 24-hour means based on 75 percent of the data and those based on the full data set.

To provide time to correct major CMS malfunctions and minimize the possibility that supplemental testing will be needed, a provision has been added which allows the source owner or operator to demonstrate compliance if the minimum data for each 24-hour period has been obtained for 22 of the 30 successive boiler operating days. This provision is based on EPA studies that have shown that a single pair of CMS pollutant and diluent monitors can be made available in excess of 75 percent of the time and several comments showing CMS availability in excess of 90 percent of the time.

In the event a CMS malfunction would prevent the source owner or operator from meeting the minimum data requirements, the regulation requires that the reference methods or other procedures approved by the Administrator be used to supplement the data. The Administrator believes, however, that a single properly designed, maintained, and operated CMS with trained personnel and an appropriate inventory of spare parts can achieve the monitoring requirements with currently available CMS equipment. In the event that an owner or operator fails to meet the minimum data requirements, a procedure is provided which may be used by the Administrator to determine compliance with the $SO_2$ and $NO_x$ standards. The procedure is provided to reduce potential problems that might arise if an owner or operation is unable to meet the minimum data requirements or attempts to manipulate the acquisition of data so as to avoid the demonstration of noncompliance. The Administrator believes that an owner or operator should not be able to avoid a finding of noncompliance with the emission standards solely by noncompliance with the minimum data requirements. Penalties related only to failure to meet the minimum data requirements may be less than those for failure to meet the emission standards and may not provide as great an incentive to maintain compliance with the regulations.

The procedure involves the calculation of standard deviations for the available inlet $SO_2$ monitoring data and the available outlet $SO_2$ and $NO_x$ monitoring data and assumes the data are normally distributed. The standard deviation of the inlet monitoring data for $SO_2$ is used to calculate the upper confidence limit of the inlet emission rate at the 95 percent confidence interval. The upper confidence limit of the inlet emission rate is used to determine the potential combustion concentration and the allowable emission rate. The standard deviation of the outlet monitoring data for $SO_2$ and $NO_x$ are used to calculate the lower confidence limit of the outlet emission rates at the 95 percent confidence interval. The lower confidence limit of the outlet emission rate is compared with the allowable emission rate to determine compliance. If the lower confidence limit of the outlet emission rate is greater than the allowable emission rate for the reporting period, the Administrator will conclude that noncompliance has occurred.

The regulations require the source owner or operator who fails to meet the minimum data requirements to perform the calculations required by the added procedure, and to report the results of the calculations in the quarterly report. The Administrator may use this information for determining the compliance status of the affected facility.

It is emphasized that while the regulations permit a determination of the compliance status of a facility in the absence of data reflecting some periods of operation, an owner and operator is required by 40 CFR 60.11(d) to continue to operate the facility at all times so as to minimize emissions consistent with good engineering practice. Also, the added procedure which allows for a determination of compliance when less than the minimum monitoring data have been obtained does not exempt the source owner or operator from the minimum data requirements. Exemption from the minimum data requirements could allow the source owner to circumvent the standard, since the added procedure assumes random variations in emission rates.

One commenter suggested that operating data be used in place of CMS data to demonstrate compliance. The Administrator does not believe, however, that the demonstration of compliance can be based on operating data alone. Consideration was given to the reporting of operating parameters during those periods when emissions data have not been obtained. This

alternative was rejected because it would mean that the source owner or operator would need to record the operating parameters at all times, and would impose an administrative burden on source owners or operators in compliance with the emission monitoring requirements. The regulation requires the owner or operator to certify that the emission control systems have been kept in operation during periods when emissions data have not been obtained.

Several commenters indicated that CMS were not sufficiently accurate to allow for a determination of compliance. One commenter provided calculations showing that the CMS could report an FGD efficiency ranging from 77.5 to 90 percent, with the scrubber operating at an efficiency of 85 percent. The analysis submitted by the commenter is theoretically possible for any single data point generated by the CMS. For the 30-day averaging periods, however, random variations in individual data points are not significant. The criterion of importance in showing compliance for this longer averaging time is the difference between the mean values measured by the CMS and the reference methods. EPA is developing quality assurance procedures, which will require a periodic demonstration that the mean emission rates measured by the CMS demonstrates a consistent and reproducible relationship with the mean emission rates measured by the reference methods or acceptable modifications of these methods.

A specific comment received on the monitoring requirements questioned the need to respan the CMS for sulfur dioxide when the sulfur content of the fuel changed by 0.5 percent. The intent of this requirement was to assure that a change in fuel sulfur content would not result in emissions exceeding the range of the CMS. This requirement has been deleted on the premise that the source owner or operator will initiate his own procedures to protect himself against loss of data.

Several comments were also received concerning detailed technical items contained in Performance Specifications 2 and 3. One comment, for example, suggested that a single "relative accuracy" specification be used for the entire CMS, as opposed to separate values for the pollutant and diluent monitors. Another comment questioned the performance specification on instrument response time, while still other comments raised questions on calibration procedures. EPA is in the process of revising Performance Specifications 2 and 3 to respond to these, and other questions. The current performance specifications, however, are adequate for the determination of compliance.

*Fuel Pretreatment*

The final regulation allows credit for fuel pretreatment to remove sulfur or increase heat content. Fuel pretreatment credits are determined in accordance with Method 19. This means that coal or oil may be treated before firing and the sulfur removed may be credited toward meeting the $SO_2$ percentage reduction requirement. The final fuel pretreatment provisions are the same as those proposed.

Most all commenters on this issue supported the fuel pretreatment crediting procedures proposed by EPA. Several commenters requested that credit also be given for sulfur removed in the coal bottom ash and fly ash. This is allowed under the final regulation and was also allowed under the proposal in the optional "as-fired" fuel sampling procedures under the $SO_2$ emission monitoring requirements. By monitoring $SO_2$ emissions (ng/J, lb/million Btu) with an as-fired fuel sampling system located upstream of coal pulverizers and with an in-stack continuous $SO_2$ monitoring system downstream of the FGD system, sulfur removal credits are combined for the coal pulverizer, bottom ash, fly ash and FGD system into one removal efficiency. Other alternative sampling procedures may also be submitted to the Administrator for approval.

Several commenters indicated that they did not understand the proposed fuel pretreatment crediting procedure for refined fuel oil. The Administrator intended to allow fuel pretreatment credits for all fuel oil desulfurization processes used in preparation of utility boiler fuels. Thus, the input and output from oil desulfurization processes (e.g., hydrotreatment units) that are used to pretreat utility boiler fuels used in determining pretreatment credits. If desulfurized oil is blended with undesulfurized oil, fuel pretreatment credits are prorated based on heat input of oils blended. The Administrator believes that the oil input to the desulfurizer should be considered the input for credit determination and not the well head crude oil or input oil to the refinery. Refining of crude oil results in the separation of the base stock into various density fractions which range from lighter products such as naphtha and distillate oils. Most of the sulfur from the crude oil is bound to the heavier residual oils which may have a sulfur content of twice the input crude oil. The residual oils can be upgraded to a lower sulfur utility steam generator fuel through the use of desulfurization technology (such as hydrodesulfurization). The Administrator believes that it is appropriate to give full fuel pretreatment credit for hydrotreatment units and not to penalize hydrodesulfurization units which are used to process high-sulfur residual oils. Thus, the input to the hydrodesulfurization unit is used to determine oil pretreatment credits and not the lower sulfur refinery input crude. This procedure will allow full credit for residual oil hydrodesulfurization units.

In relation to fuel pretreatment credits for coal, commenters requested that sampling be allowed prior to the initial coal breaker. Under the final standards, coal sampling may be conducted at any location (either before or after the initial coal breaker). It is desirable to sample coal after the initial breaker because the smaller coal volume and coal size will reduce sampling requirements under Method 19. If sampling were conducted before the initial breaker, rock removed by the coal breaker would not result in any additional sulfur removal credit. Coal samples are analyzed to determine potential $SO_2$ emissions in ng/J (lb/million Btu) and any removal of rock or other similar reject material will not change the potential $SO_2$ emission rate (ng/J; lb/million Btu).

An owner or operator of an affected facility who elects to use fuel pretreatment credits is responsible for insuring that the EPA Method 19 procedures are followed in determining $SO_2$ removal credit for pretreatment equipment.

**Miscellaneous**

Establishment of standards of performance for electric utility steam generating units was preceded by the Administrator's determination that these sources contribute significantly to air pollution which causes or contributes to the endangerment of public health or welfare (36 FR 5931), and by proposal of regulations on September 19, 1978 (43 FR 42154). In addition, a preproposal public hearing (May 25–26, 1977) and a postproposal public hearing (December 12–13, 1978) was held after notification was given in the **Federal Register**. Under section 117 of the Act, publication of these regulations was preceded by consultation with appropriate advisory committees, independent experts, and Federal departments and agencies.

Standards of performance for new fossil-fuel-fired stationary sources established under section 111 of the Clean Air Act reflect:

Application of the best technological system of continuous emission reduction which (taking into consideration the cost of achieving such emission reduction, any nonair quality health and environmental impact and energy requirements) the Administrator determines has been adequately demonstrated. [section 111(a)(1)]

Although there may be emission control technology available that can reduce emissions below those levels required to comply with standards of performance, this technology might not be selected as the basis of standards of performance due to costs associated with its use. Accordingly, standards of performance should not be viewed as the ultimate in achievable emission control. In fact, the Act requires (or has potential for requiring) the imposition of a more stringent emission standard in several situations.

For example, applicable costs do not play as prominent a role in determining the "lowest achievable emission rate" for new or modified sources located in nonattainment areas, i.e., those areas where statutorily-mandated health and welfare standards are being violated. In this respect, section 173 of the Act requires that a new or modified source constructed in an area that exceeds the National Ambient Air Quality Standard (NAAQS) must reduce emissions to the level that reflects the "lowest achievable emission rate" (LAER), as defined in section 171(3), for such source category. The statute defines LAER as that rate of emission which reflects:

(A) The most stringent emission limitation which is contained in the implementation plan of any State for such class or category of source, unless the owner or operator of the proposed source demonstrates that such limitations are not achievable, or

(B) The most stringent emission limitation which is achieved in practice by such class or category of source, whichever is more stringent.

In no event can the emission rate exceed any applicable new source performance standard [section 171(3)].

A similar situation may arise under the prevention of significant deterioration of air quality provisions of the Act (Part C). These provisions require that certain sources [referred to in section 169(1)] employ "best available control technology" [as defined in section 169(3)] for all pollutants regulated under the Act. Best available control technology (BACT) must be determined on a case-by-case basis, taking energy, environmental and economic impacts, and other costs into account. In no event may the application of BACT result in emissions of any pollutants which will exceed the emissions allowed by any applicable standard established pursuant to section 111 (or 112) of the Act.

In all events, State implementation plans (SIP's) approved or promulgated under section 110 of the Act must provide for the attainment and maintenance of National Ambient Air Quality Standards designed to protect public health and welfare. For this purpose, SIP's must in some cases require greater emission reductions than those required by standards of performance for new sources.

Finally, States are free under section 116 of the Act to establish even more stringent emission limits than those established under section 111 or those necessary to attain or maintain the NAAQS under section 110. Accordingly, new sources may in some cases be subject to limitations more stringent than EPA's standards of performance under section 111, and prospective owners and operators of new sources should be aware of this possibility in planning for such facilities.

Under EPA's sunset policy for reporting requirements in regulations, the reporting requirements in this regulation will automatically expire five years from the date of promulgation unless the Administrator takes affirmative action to extend them. Within the five year period, the Administrator will review these requirements.

Section 317 of the Clean Air Act requires the Administrator to prepare an economic impact assessment for revisions determined by the Administrator to be substantial. The Administrator has determined that these revisions are substantial and has prepared an economic impact assessment and included the required information in the background information documents.

Dated: June 1, 1979.

**Douglas M. Costle,**

*Administrator.*

## PART 60—STANDARDS OF PERFORMANCE FOR NEW STATIONARY SOURCES

In 40 CFR Part 60, § 60.8 of Subpart A is revised, the heading and § 60.40 of Subpart D are revised, a new Subpart Da is added, and a new reference method is added to Appendix A as follows:

1. Section 60.8(d) and § 60.8(f) are revised as follows:

**§ 60.8 Performance tests.**

* * * * *

(d) The owner or operator of an affected facility shall provide the Administrator at least 30 days prior notice of any performance test, except as specified under other subparts, to afford the Administrator the opportunity to have an observer present.

* * * * *

(f) Unless otherwise specified in the applicable subpart, each performance test shall consist of three separate runs using the applicable test method. Each run shall be conducted for the time and under the conditions specified in the applicable standard. For the purpose of determining compliance with an applicable standard, the arithmetic means of results of the three runs shall apply. In the event that a sample is accidentally lost or conditions occur in which one of the three runs must be discontinued because of forced shutdown, failure of an irreplaceable portion of the sample train, extreme meteorological conditions, or other circumstances, beyond the owner or operator's control, compliance may, upon the Administrator's approval, be determined using the arithmetic mean of the results of the two other runs.

2. The heading for Subpart D is revised to read as follows:

### Subpart D—Standards of Performance for Fossil-Fuel-Fired Steam Generators for Which Construction Is Commenced After August 17, 1971

3. Section 60.40 is amended by adding paragraph (d) as follows:

**§ 60.40 Applicability and designation of affected facility.**

* * * * *

(d) Any facility covered under Subpart Da is not covered under This Subpart.

(Sec. 111, 301(a) of the Clean Air Act as amended (42 U.S.C. 7411, 7601(a)).)

4. A new Subpart Da is added as follows:

### Subpart Da—Standards of Performance for Electric Utility Steam Generating Units for Which Construction Is Commenced After September 18, 1978

Sec.

60.40a Applicability and designation of affected facility.
60.41a Definitions.
60.42a Standard for particulate matter.
60.43a Standard for sulfur dioxide.
60.44a Standard for nitrogen oxides.
60.45a Commercial demonstration permit.
60.46a Compliance provisions.
60.47a Emission monitoring.
60.48a Compliance determination procedures and methods.
60.49a Reporting requirements.

Authority: Sec. 111, 301(a) of the Clean Air Act as amended (42 U.S.C. 7411, 7601(a)), and additional authority as noted below.

## Subpart Da—Standards of Performance for Electric Utility Steam Generating Units for Which Construction Is Commenced After September 18, 1978

### § 60.40a Applicability and designation of affected facility.

(a) The affected facility to which this subpart applies is each electric utility steam generating unit:

(1) That is capable of combusting more than 73 megawatts (250 million Btu/hour) heat input of fossil fuel (either alone or in combination with any other fuel); and

(2) For which construction or modification is commenced after September 18, 1978.

(b) This subpart applies to electric utility combined cycle gas turbines that are capable of combusting more than 73 megawatts (250 million Btu/hour) heat input of fossil fuel in the steam generator. Only emissions resulting from combustion of fuels in the steam generating unit are subject to this subpart. (The gas turbine emissions are subject to Subpart GG.)

(c) Any change to an existing fossil-fuel-fired steam generating unit to accommodate the use of combustible materials, other than fossil fuels, shall not bring that unit under the applicability of this subpart.

(d) Any change to an existing steam generating unit originally designed to fire gaseous or liquid fossil fuels, to accommodate the use of any other fuel (fossil or nonfossil) shall not bring that unit under the applicability of this subpart.

### § 60.41a Definitions.

As used in this subpart, all terms not defined herein shall have the meaning given them in the Act and in subpart A of this part.

"Steam generating unit" means any furnace, boiler, or other device used for combusting fuel for the purpose of producing steam (including fossil-fuel-fired steam generators associated with combined cycle gas turbines; nuclear steam generators are not included).

"Electric utility steam generating unit" means any steam electric generating unit that is constructed for the purpose of supplying more than one-third of its potential electric output capacity and more than 25 MW electrical output to any utility power distribution system for sale. Any steam supplied to a steam distribution system for the purpose of providing steam to a steam-electric generator that would produce electrical energy for sale is also considered in determining the electrical energy output capacity of the affected facility.

"Fossil fuel" means natural gas, petroleum, coal, and any form of solid, liquid, or gaseous fuel derived from such material for the purpose of creating useful heat.

"Subbituminous coal" means coal that is classified as subbituminous A, B, or C according to the American Society of Testing and Materials' (ASTM) Standard Specification for Classification of Coals by Rank D388-66.

"Lignite" means coal that is classified as lignite A or B according to the American Society of Testing and Materials' (ASTM) Standard Specification for Classification of Coals by Rank D388-66.

"Coal refuse" means waste products of coal mining, physical coal cleaning, and coal preparation operations (e.g. culm, gob, etc.) containing coal, matrix material, clay, and other organic and inorganic material.

"Potential combustion concentration" means the theoretical emissions (ng/J, lb/million Btu heat input) that would result from combustion of a fuel in an uncleaned state 9without emission control systems) and:

(a) For particulate matter is:

(1) 3,000 ng/J (7.0 lb/million Btu) heat input for solid fuel; and

(2) 75 ng/J (0.17 lb/million Btu) heat input for liquid fuels.

(b) For sulfur dioxide is determined under § 60.48a(b).

(c) For nitrogen oxides is:

(1) 290 ng/J (0.67 lb/million Btu) heat input for gaseous fuels;

(2) 310 ng/J (0.72 lb/million Btu) heat input for liquid fuels; and

(3) 990 ng/J (2.30 lb/million Btu) heat input for solid fuels.

"Combined cycle gas turbine" means a stationary turbine combustion system where heat from the turbine exhaust gases is recovered by a steam generating unit.

"Interconnected" means that two or more electric generating units are electrically tied together by a network of power transmission lines, and other power transmission equipment.

"Electric utility company" means the largest interconnected organization, business, or governmental entity that generates electric power for sale (e.g., a holding company with operating subsidiary companies).

"Principal company" means the electric utility company or companies which own the affected facility.

"Neighboring company" means any one of those electric utility companies with one or more electric power interconnections to the principal company and which have geographically adjoining service areas.

"Net system capacity" means the sum of the net electric generating capability (not necessarily equal to rated capacity) of all electric generating equipment owned by an electric utility company (including steam generating units, internal combustion engines, gas turbines, nuclear units, hydroelectric units, and all other electric generating equipment) plus firm contractual purchases that are interconnected to the affected facility that has the malfunctioning flue gas desulfurization system. The electric generating capability of equipment under multiple ownership is prorated based on ownership unless the proportional entitlement to electric output is otherwise established by contractual arrangement.

"System load" means the entire electric demand of an electric utility company's service area interconnected with the affected facility that has the malfunctioning flue gas desulfurization system plus firm contractual sales to other electric utility companies. Sales to other electric utility companies (e.g., emergency power) not on a firm contractual basis may also be included in the system load when no available system capacity exists in the electric utility company to which the power is supplied for sale.

"System emergency reserves" means an amount of electric generating capacity equivalent to the rated capacity of the single largest electric generating unit in the electric utility company (including steam generating units, internal combustion engines, gas turbines, nuclear units, hydroelectric units, and all other electric generating equipment) which is interconnected with the affected facility that has the malfunctioning flue gas desulfurization system. The electric generating capability of equipment under multiple ownership is prorated based on ownership unless the proportional entitlement to electric output is otherwise established by contractual arrangement.

"Available system capacity" means the capacity determined by subtracting the system load and the system emergency reserves from the net system capacity.

"Spinning reserve" means the sum of the unutilized net generating capability of all units of the electric utility company that are synchronized to the power distribution system and that are capable of immediately accepting

additional load. The electric generating capability of equipment under multiple ownership is prorated based on ownership unless the proportional entitlement to electric output is otherwise established by contractual arrangement.

"Available purchase power" means the lesser of the following:

(a) The sum of available system capacity in all neighboring companies.

(b) The sum of the rated capacities of the power interconnection devices between the principal company and all neighboring companies, minus the sum of the electric power load on these interconnections.

(c) The rated capacity of the power transmission lines between the power interconnection devices and the electric generating units (the unit in the principal company that has the malfunctioning flue gas desulfurization system and the unit(s) in the neighboring company supplying replacement electrical power) less the electric power load on these transmission lines.

"Spare flue gas desulfurization system module" means a separate system of sulfur dioxide emission control equipment capable of treating an amount of flue gas equal to the total amount of flue gas generated by an affected facility when operated at maximum capacity divided by the total number of nonspare flue gas desulfurization modules in the system.

"Emergency condition" means that period of time when:

(a) The electric generation output of an affected facility with a malfunctioning flue gas desulfurization system cannot be reduced or electrical output must be increased because:

(1) All available system capacity in the principal company interconnected with the affected facility is being operated, and

(2) All available purchase power interconnected with the affected facility is being obtained, or

(b) The electric generation demand is being shifted as quickly as possible from an affected facility with a malfunctioning flue gas desulfurization system to one or more electrical generating units held in reserve by the principal company or by a neighboring company, or

(c) An affected facility with a malfunctioning flue gas desulfurization system becomes the only available unit to maintain a part or all of the principal company's system emergency reserves and the unit is operated in spinning reserve at the lowest practical electric generation load consistent with not causing significant physical damage to the unit. If the unit is operated at a higher load to meet load demand, an emergency condition would not exist unless the conditions under (a) of this definition apply.

"Electric utility combined cycle gas turbine" means any combined cycle gas turbine used for electric generation that is constructed for the purpose of supplying more than one-third of its potential electric output capacity and more than 25 MW electrical output to any utility power distribution system for sale. Any steam distribution system that is constructed for the purpose of providing steam to a steam electric generator that would produce electrical power for sale is also considered in determining the electrical energy output capacity of the affected facility.

"Potential electrical output capacity" is defined as 33 percent of the maximum design heat input capacity of the steam generating unit (e.g., a steam generating unit with a 100-MW (340 million Btu/hr) fossil-fuel heat input capacity would have a 33-MW potential electrical output capacity). For electric utility combined cycle gas turbines the potential electrical output capacity is determined on the basis of the fossil-fuel firing capacity of the steam generator exclusive of the heat input and electrical power contribution by the gas turbine.

"Anthracite" means coal that is classified as anthracite according to the American Society of Testing and Materials' (ASTM) Standard Specification for Classification of Coals by Rank D388-66.

"Solid-derived fuel" means any solid, liquid, or gaseous fuel derived from solid fuel for the purpose of creating useful heat and includes, but is not limited to, solvent refined coal, liquified coal, and gasified coal.

"24-hour period" means the period of time between 12:01 a.m. and 12:00 midnight.

"Resource recovery unit" means a facility that combusts more than 75 percent non-fossil fuel on a quarterly (calendar) heat input basis.

"Noncontinental area" means the State of Hawaii, the Virgin Islands, Guam, American Samoa, the Commonwealth of Puerto Rico, or the Northern Mariana Islands.

"Boiler operating day" means a 24-hour period during which fossil fuel is combusted in a steam generating unit for the entire 24 hours.

**§ 60.42a Standard for particulate matter.**

(a) On and after the date on which the performance test required to be conducted under § 60.8 is completed, no owner or operator subject to the provisions of this subpart shall cause to be discharged into the atmosphere from any affected facility any gases which contain particulate matter in excess of:

(1) 13 ng/J (0.03 lb/million Btu) heat input derived from the combustion of solid, liquid, or gaseous fuel;

(2) 1 percent of the potential combustion concentration (99 percent reduction) when combusting solid fuel; and

(3) 30 percent of potential combustion concentration (70 percent reduction) when combusting liquid fuel.

(b) On and after the date the particulate matter performance test required to be conducted under § 60.8 is completed, no owner or operator subject to the provisions of this subpart shall cause to be discharged into the atmosphere from any affected facility any gases which exhibit greater than 20 percent opacity (6-minute average), except for one 6-minute period per hour of not more than 27 percent opacity.

**§ 60.43a Standard for sulfur dioxide.**

(a) On and after the date on which the initial performance test required to be conducted under § 60.8 is completed, no owner or operator subject to the provisions of this subpart shall cause to be discharged into the atmosphere from any affected facility which combusts solid fuel or solid-derived fuel, except as provided under paragraphs (c), (d), (f) or (h) of this section, any gases which contain sulfur dioxide in excess of:

(1) 520 ng/J (1.20 lb/million Btu) heat input and 10 percent of the potential combustion concentration (90 percent reduction), or

(2) 30 percent of the potential combustion concentration (70 percent reduction), when emissions are less than 260 ng/J (0.60 lb/million Btu) heat input.

(b) On and after the date on which the initial performance test required to be conducted under § 60.8 is completed, no owner or operator subject to the provisions of this subpart shall cause to be discharged into the atmosphere from any affected facility which combusts liquid or gaseous fuels (except for liquid or gaseous fuels derived from solid fuels and as provided under paragraphs (e) or (h) of this section), any gases which contain sulfur dioxide in excess of:

(1) 340 ng/J (0.80 lb/million Btu) heat input and 10 percent of the potential combustion concentration (90 percent reduction), or

(2) 100 percent of the potential combustion concentration (zero percent reduction) when emissions are less than 86 ng/J (0.20 lb/million Btu) heat input.

(c) On and after the date on which the initial performance test required to be

conducted under § 60.8 is complete, no owner or operator subject to the provisions of this subpart shall cause to be discharged into the atmosphere from any affected facility which combusts solid solvent refined coal (SRC-I) any gases which contain sulfur dioxide in excess of 520 ng/J (1.20 lb/million Btu) heat input and 15 percent of the potential combustion concentration (85 percent reduction) except as provided under paragraph (f) of this section; compliance with the emission limitation is determined on a 30-day rolling average basis and compliance with the percent reduction requirement is determined on a 24-hour basis.

(d) Sulfur dioxide emissions are limited to 520 ng/J (1.20 lb/million Btu) heat input from any affected facility which:

(1) Combusts 100 percent anthracite,

(2) Is classified as a resource recovery facility, or

(3) Is located in a noncontinental area and combusts solid fuel or solid-derived fuel.

(e) Sulfur dixoide emissions are limited to 340 ng/J (0.80 lb/million Btu) heat input from any affected facility which is located in a noncontinental area and combusts liquid or gaseous fuels (excluding solid-derived fuels).

(f) The emission reduction requirements under this section do not apply to any affected facility that is operated under an $SO_2$ commercial demonstration permit issued by the Administrator in accordance with the provisions of § 60.45a.

(g) Compliance with the emission limitation and percent reduction requirements under this section are both determined on a 30-day rolling average basis except as provided under paragraph (c) of this section.

(h) When different fuels are combusted simultaneously, the applicable standard is determined by proration using the following formula:

(1) If emissions of sulfur dioxide to the atmosphere are greater than 260 ng/J (0.60 lb/million Btu) heat input

$E_{SO_2} = [340\ x + 520\ y]/100$ and
$P_{SO_2} = 10$ percent

(2) If emissions of sulfur dioxide to the atmosphere are equal to or less than 260 ng/J (0.60 lb/million Btu) heat input:

$E_{SO_2} = [340\ x + 520\ y]/100$ and
$P_{SO_2} = [90\ x + 70\ y]/100$

where:

$E_{SO_2}$ is the prorated sulfur dioxide emission limit (ng/J heat input),

$P_{SO_2}$ is the percentage of potential sulfur dioxide emission allowed (percent reduction required $= 100 - P_{SO_2}$).

x is the percentage of total heat input derived from the combustion of liquid or gaseous fuels (excluding solid-derived fuels)

y is the percentage of total heat input derived from the combustion of solid fuel (including solid-derived fuels)

**§ 60.44a Standard for nitrogen oxides.**

(a) On and after the date on which the initial performance test required to be conducted under § 60.8 is completed, no owner or operator subject to the provisions of this subpart shall cause to be discharged into the atmosphere from any affected facility, except as provided under paragraph (b) of this section, any gases which contain nitrogen oxides in excess of the following emission limits, based on a 30-day rolling average.

(1) $NO_x$ Emission Limits—

| Fuel type | Emission limit ng/J (lb/million Btu) heat input | |
|---|---|---|
| Gaseous Fuels: | | |
| Coal-derived fuels | 210 | (0.50) |
| All other fuels | 86 | (0.20) |
| Liquid Fuels: | | |
| Coal-derived fuels | 210 | (0.50) |
| Shale oil | 210 | (0.50) |
| All other fuels | 130 | (0.30) |
| Solid Fuels: | | |
| Coal-derived fuels | 210 | (0.50) |
| Any fuel containing more than 25%, by weight, coal refuse | Exempt from $NO_x$ standards and $NO_x$ monitoring requirements | |
| Any fuel containing more than 25%, by weight, lignite if the lignite is mined in North Dakota, South Dakota, or Montana, and is combusted in a slag tap furnace | 340 | (0.80) |
| Lignite not subject to the 340 ng/J heat input emission limit | 260 | (0.60) |
| Subbituminous coal | 210 | (0.50) |
| Bituminous coal | 260 | (0.60) |
| Anthracite coal | 260 | (0.60) |
| All other fuels | 260 | (0.60) |

(2) $NO_x$ reduction requirements—

| Fuel type | Percent reduction of potential combustion concentration |
|---|---|
| Gaseous fuels | 25% |
| Liquid fuels | 30% |
| Solid fuels | 65% |

(b) The emission limitations under paragraph (a) of this section do not apply to any affected facility which is combusting coal-derived liquid fuel and is operating under a commercial demonstration permit issued by the Administrator in accordance with the provisions of § 60.45a.

(c) When two or more fuels are combusted simultaneously, the applicable standard is determined by proration using the following formula:

$E_{NO_x} = [86\ w + 130\ x + 210\ y + 260\ z]/100$

where:

$E_{NO_x}$ is the applicable standard for nitrogen oxides when multiple fuels are combusted simultaneously (ng/J heat input);

w is the percentage of total heat input derived from the combustion of fuels subject to the 86 ng/J heat input standard;

x is the percentage of total heat input derived from the combustion of fuels subject to the 130 ng/J heat input standard;

y is the percentage of total heat input derived from the combustion of fuels subject to the 210 ng/J heat input standard; and

z is the percentage of total heat input derived from the combustion of fuels subject to the 260 ng/J heat input standard.

**§ 60.45a Commercial demonstration permit.**

(a) An owner or operator of an affected facility proposing to demonstrate an emerging technology may apply to the Administrator for a commercial demonstration permit. The Administrator will issue a commercial demonstration permit in accordance with paragraph (e) of this section. Commercial demonstration permits may be issued only by the Administrator, and this authority will not be delegated.

(b) An owner or operator of an affected facility that combusts solid solvent refined coal (SRC-I) and who is issued a commercial demonstration permit by the Administrator is not subject to the $SO_2$ emission reduction requirements under § 60.43a(c) but must, as a minimum, reduce $SO_2$ emissions to 20 percent of the potential combustion concentration (80 percent reduction) for each 24-hour period of steam generator operation and to less than 520 ng/J (1.20 lb/million Btu) heat input on a 30-day rolling average basis.

(c) An owner or operator of a fluidized bed combustion electric utility steam generator (atmospheric or pressurized) who is issued a commercial demonstration permit by the Administrator is not subject to the $SO_2$ emission reduction requirements under § 60.43a(a) but must, as a minimum, reduce $SO_2$ emissions to 15 percent of the potential combustion concentration (85 percent reduction) on a 30-day rolling average basis and to less than 520 ng/J (1.20 lb/million Btu) heat input on a 30-day rolling average basis.

(d) The owner or operator of an affected facility that combusts coal-derived liquid fuel and who is issued a commercial demonstration permit by the Administrator is not subject to the applicable $NO_x$ emission limitation and percent reduction under § 60.44a(a) but must, as a minimum, reduce emissions to less than 300 ng/J (0.70 lb/million Btu)

heat input on a 30-day rolling average basis.

(e) Commercial demonstration permits may not exceed the following equivalent MW electrical generation capacity for any one technology category, and the total equivalent MW electrical generation capacity for all commercial demonstration plants may not exceed 15,000 MW.

| Technology | Pollutant | Equivalent electrical capacity (MW electrical output) |
|---|---|---|
| Solid solvent refined coal (SRC I) | $SO_2$ | 6,000–10,000 |
| Fluidized bed combustion (atmospheric) | $SO_2$ | 400–3,000 |
| Fluidized bed combustion (pressurized) | $SO_2$ | 400–1,200 |
| Coal liquefaction | $NO_x$ | 750–10,000 |
| Total allowable for all technologies | | 15,000 |

**§ 60.46a Compliance provisions.**

(a) Compliance with the particulate matter emission limitation under § 60.42a(a)(1) constitutes compliance with the percent reduction requirements for particulate matter under § 60.42a(a)(2) and (3).

(b) Compliance with the nitrogen oxides emission limitation under § 60.44a(a) constitutes compliance with the percent reduction requirements under § 60.44a(a)(2).

(c) The particulate matter emission standards under § 60.42a and the nitrogen oxides emission standards under § 60.44a apply at all times except during periods of startup, shutdown, or malfunction. The sulfur dioxide emission standards under § 60.43a apply at all times except during periods of startup, shutdown, or when both emergency conditions exist and the procedures under paragraph (d) of this section are implemented.

(d) During emergency conditions in the principal company, an affected facility with a malfunctioning flue gas desulfurization system may be operated if sulfur dioxide emissions are minimized by:

(1) Operating all operable flue gas desulfurization system modules, and bringing back into operation any malfunctioned module as soon as repairs are completed,

(2) Bypassing flue gases around only those flue gas desulfurization system modules that have been taken out of operation because they were incapable of any sulfur dioxide emission reduction or which would have suffered significant physical damage if they had remained in operation, and

(3) Designing, constructing, and operating a spare flue gas desulfurization system module for an affected facility larger than 365 MW (1,250 million Btu/hr) heat input (approximately 125 MW electrical output capacity). The Administrator may at his discretion require the owner or operator within 60 days of notification to demonstrate spare module capability. To demonstrate this capability, the owner or operator must demonstrate compliance with the appropriate requirements under paragraph (a), (b), (d), (e), and (i) under § 60.43a for any period of operation lasting from 24 hours to 30 days when:

(i) Any one flue gas desulfurization module is not operated,

(ii) The affected facility is operating at the maximum heat input rate,

(iii) The fuel fired during the 24-hour to 30-day period is representative of the type and average sulfur content of fuel used over a typical 30-day period, and

(iv) The owner or operator has given the Administrator at least 30 days notice of the date and period of time over which the demonstration will be performed.

(e) After the initial performance test required under § 60.8, compliance with the sulfur dioxide emission limitations and percentage reduction requirements under § 60.43a and the nitrogen oxides emission limitations under § 60.44a is based on the average emission rate for 30 successive boiler operating days. A separate performance test is completed at the end of each boiler operating day after the initial performance test, and a new 30 day average emission rate for both sulfur dioxide and nitrogen oxides and a new percent reduction for sulfur dioxide are calculated to show compliance with the standards.

(f) For the initial performance test required under § 60.8, compliance with the sulfur dioxide emission limitations and percent reduction requirements under § 60.43a and the nitrogen oxides emission limitation under § 60.44a is based on the average emission rates for sulfur dioxide, nitrogen oxides, and percent reduction for sulfur dioxide for the first 30 successive boiler operating days. The initial performance test is the only test in which at least 30 days prior notice is required unless otherwise specified by the Administrator. The initial performance test is to be scheduled so that the first boiler operating day of the 30 successive boiler operating days is completed within 60 days after achieving the maximum production rate at which the affected facility will be operated, but not later than 180 days after initial startup of the facility.

(g) Compliance is determined by calculating the arithmetic average of all hourly emission rates for $SO_2$ and $NO_x$ for the 30 successive boiler operating days, except for data obtained during startup, shutdown, malfunction ($NO_x$ only), or emergency conditions ($SO_2$ only). Compliance with the percentage reduction requirement for $SO_2$ is determined based on the average inlet and average outlet $SO_2$ emission rates for the 30 successive boiler operating days.

(h) If an owner or operator has not obtained the minimum quantity of emission data as required under § 60.47a of this subpart, compliance of the affected facility with the emission requirements under §§ 60.43a and 60.44a of this subpart for the day on which the 30-day period ends may be determined by the Administrator by following the applicable procedures in sections 6.0 and 7.0 of Reference Method 19 (Appendix A).

**§ 60.47a Emission monitoring.**

(a) The owner or operator of an affected facility shall install, calibrate, maintain, and operate a continuous monitoring system, and record the output of the system, for measuring the opacity of emissions discharged to the atmosphere, except where gaseous fuel is the only fuel combusted. If opacity interference due to water droplets exists in the stack (for example, from the use of an FGD system), the opacity is monitored upstream of the interference (at the inlet to the FGD system). If opacity interference is experienced at all locations (both at the inlet and outlet of the sulfur dioxide control system), alternate parameters indicative of the particulate matter control system's performance are monitored (subject to the approval of the Administrator).

(b) The owner or operator of an affected facility shall install, calibrate, maintain, and operate a continuous monitoring system, and record the output of the system, for measuring sulfur dioxide emissions, except where natural gas is the only fuel combusted, as follows:

(1) Sulfur dioxide emissions are monitored at both the inlet and outlet of the sulfur dioxide control device.

(2) For a facility which qualifies under the provisions of § 60.43a(d), sulfur dioxide emissions are only monitored as discharged to the atmosphere.

(3) An "as fired" fuel monitoring system (upstream of coal pulverizers) meeting the requirements of Method 19 (Appendix A) may be used to determine

potential sulfur dioxide emissions in place of a continuous sulfur dioxide emission monitor at the inlet to the sulfur dioxide control device as required under paragraph (b)(1) of this section.

(c) The owner or operator of an affected facility shall install, calibrate, maintain, and operate a continuous monitoring system, and record the output of the system, for measuring nitrogen oxides emissions discharged to the atmosphere.

(d) The owner or operator of an affected facility shall install, calibrate, maintain, and operate a continuous monitoring system, and record the output of the system, for measuring the oxygen or carbon dioxide content of the flue gases at each location where sulfur dioxide or nitrogen oxides emissions are monitored.

(e) The continuous monitoring systems under paragraphs (b), (c), and (d) of this section are operated and data recorded during all periods of operation of the affected facility including periods of startup, shutdown, malfunction or emergency conditions, except for continuous monitoring system breakdowns, repairs, calibration checks, and zero and span adjustments.

(f) When emission data are not obtained because of continuous monitoring system breakdowns, repairs, calibration checks and zero and span adjustments, emission data will be obtained by using other monitoring systems as approved by the Administrator or the reference methods as described in paragraph (h) of this section to provide emission data for a minimum of 18 hours in at least 22 out of 30 successive boiler operating days.

(g) The 1-hour averages required under paragraph § 60.13(h) are expressed in ng/J (lbs/million Btu) heat input and used to calculate the average emission rates under § 60.46a. The 1-hour averages are calculated using the data points required under § 60.13(b). At least two data points must be used to calculate the 1-hour averages.

(h) Reference methods used to supplement continuous monitoring system data to meet the minimum data requirements in paragraph § 60.47a(f) will be used as specified below or otherwise approved by the Administrator.

(1) Reference Methods 3, 6, and 7, as applicable, are used. The sampling location(s) are the same as those used for the continuous monitoring system.

(2) For Method 6, the minimum sampling time is 20 minutes and the minimum sampling volume is 0.02 dscm (0.71 dscf) for each sample. Samples are taken at approximately 60-minute intervals. Each sample represents a 1-hour average.

(3) For Method 7, samples are taken at approximately 30-minute intervals. The arithmetic average of these two consective samples represent a 1-hour average.

(4) For Method 3, the oxygen or carbon dioxide sample is to be taken for each hour when continuous $SO_2$ and $NO_x$ data are taken or when Methods 6 and 7 are required. Each sample shall be taken for a minimum of 30 minutes in each hour using the integrated bag method specified in Method 3. Each sample represents a 1-hour average.

(5) For each 1-hour average, the emissions expressed in ng/J (lb/million Btu) heat input are determined and used as needed to achieve the minimum data requirements of paragraph (f) of this section.

(i) The following procedures are used to conduct monitoring system performance evaluations under § 60.13(c) and calibration checks under § 60.13(d).

(1) Reference method 6 or 7, as applicable, is used for conducting performance evaluations of sulfur dioxide and nitrogen oxides continuous monitoring systems.

(2) Sulfur dioxide or nitrogen oxides, as applicable, is used for preparing calibration gas mixtures under performance specification 2 of appendix B to this part.

(3) For affected facilities burning only fossil fuel, the span value for a continuous monitoring system for measuring opacity is between 60 and 80 percent and for a continuous monitoring system measuring nitrogen oxides is determined as follows:

| Fossil fuel | Span value for nitrogen oxides (ppm) |
|---|---|
| Gas | 500 |
| Liquid | 500 |
| Solid | 1,000 |
| Combination | 500 (x + y) + 1,000z |

where:

x is the fraction of total heat input derived from gaseous fossil fuel,

y is the fraction of total heat input derived from liquid fossil fuel, and

z is the fraction of total heat input derived from solid fossil fuel.

(4) All span values computed under paragraph (b)(3) of this section for burning combinations of fossil fuels are rounded to the nearest 500 ppm.

(5) For affected facilities burning fossil fuel, alone or in combination with non-fossil fuel, the span value of the sulfur dioxide continuous monitoring system at the inlet to the sulfur dioxide control device is 125 percent of the maximum estimated hourly potential emissions of the fuel fired, and the outlet of the sulfur dioxide control device is 50 percent of maximum estimated hourly potential emissions of the fuel fired.

(Sec. 114, Clean Air Act as amended (42 U.S.C. 7414).)

**§ 60.48a Compliance determination procedures and methods.**

(a) The following procedures and reference methods are used to determine compliance with the standards for particulate matter under § 60.42a.

(1) Method 3 is used for gas analysis when applying method 5 or method 17.

(2) Method 5 is used for determining particulate matter emissions and associated moisture content. Method 17 may be used for stack gas temperatures less than 160 C (320 F).

(3) For Methods 5 or 17, Method 1 is used to select the sampling site and the number of traverse sampling points. The sampling time for each run is at least 120 minutes and the minimum sampling volume is 1.7 dscm (60 dscf) except that smaller sampling times or volumes, when necessitated by process variables or other factors, may be approved by the Administrator.

(4) For Method 5, the probe and filter holder heating system in the sampling train is set to provide a gas temperature no greater than 160°C (32°F).

(5) For determination of particulate emissions, the oxygen or carbon-dioxide sample is obtained simultaneously with each run of Methods 5 or 17 by traversing the duct at the same sampling location. Method 1 is used for selection of the number of traverse points except that no more than 12 sample points are required.

(6) For each run using Methods 5 or 17, the emission rate expressed in ng/J heat input is determined using the oxygen or carbon-dioxide measurements and particulate matter measurements obtained under this section, the dry basis $F_c$-factor and the dry basis emission rate calculation procedure contained in Method 19 (Appendix A)

(7) Prior to the Administrator's issuance of a particulate matter reference method that does not experience sulfuric acid mist interference problems, particulate matter emissions may be sampled prior to a wet flue gas desulfurization system.

(b) The following procedures and methods are used to determine compliance with the sulfur dioxide standards under § 60.43a.

(1) Determine the percent of potential combustion concentration (percent PCC) emitted to the atmosphere as follows:

(i) *Fuel Pretreatment (% $R_f$):* Determine the percent reduction achieved by any fuel pretreatment using the procedures in Method 19 (Appendix A). Calculate the average percent reduction for fuel pretreatment on a quarterly basis using fuel analysis data. The determination of percent $R_f$ to calculate the percent of potential combustion concentration emitted to the atmosphere is optional. For purposes of determining compliance with any percent reduction requirements under § 60.43a, any reduction in potential $SO_2$ emissions resulting from the following processes may be credited:

(A) Fuel pretreatment (physical coal cleaning, hydrodesulfurization of fuel oil, etc.),

(B) Coal pulverizers, and

(C) Bottom and flyash interactions.

(ii) *Sulfur Dioxide Control System (% $R_s$):* Determine the percent sulfur dioxide reduction achieved by any sulfur dioxide control system using emission rates measured before and after the control system, following the procedures in Method 19 (Appendix A); or, a combination of an "as fired" fuel monitor and emission rates measured after the control system, following the procedures in Method 19 (Appendix A). When the "as fired" fuel monitor is used, the percent reduction is calculated using the average emission rate from the sulfur dioxide control device and the average $SO_2$ input rate from the "as fired" fuel analysis for 30 successive boiler operating days.

(iii) *Overall percent reduction (% $R_o$):* Determine the overall percent reduction using the results obtained in paragraphs (b)(1) (i) and (ii) of this section following the procedures in Method 19 (Appendix A). Results are calculated for each 30-day period using the quarterly average percent sulfur reduction determined for fuel pretreatment from the previous quarter and the sulfur dioxide reduction achieved by a sulfur dioxide control system for each 30-day period in the current quarter.

(iv) *Percent emitted (% PCC):* Calculate the percent of potential combustion concentration emitted to the atmosphere using the following equation: Percent PCC = 100 − Percent $R_o$

(2) Determine the sulfur dioxide emission rates following the procedures in Method 19 (Appendix A).

(c) The procedures and methods outlined in Method 19 (Appendix A) are used in conjunction with the 30-day nitrogen-oxides emission data collected under § 60.47a to determine compliance with the applicable nitrogen oxides standard under § 60.44.

(d) Electric utility combined cycle gas turbines are performance tested for particulate matter, sulfur dioxide, and nitrogen oxides using the procedures of Method 19 (Appendix A). The sulfur dioxide and nitrogen oxides emission rates from the gas turbine used in Method 19 (Appendix A) calculations are determined when the gas turbine is performance tested under subpart GG. The potential uncontrolled particulate matter emission rate from a gas turbine is defined as 17 ng/J (0.04 lb/million Btu) heat input.

**§ 60.49a Reporting requirements.**

(a) For sulfur dioxide, nitrogen oxides, and particulate matter emissions, the performance test data from the initial performance test and from the performance evaluation of the continuous monitors (including the transmissometer) are submitted to the Administrator.

(b) For sulfur dioxide and nitrogen oxides the following information is reported to the Administrator for each 24-hour period.

(1) Calendar date.

(2) The average sulfur dioxide and nitrogen oxide emission rates (ng/J or lb/million Btu) for each 30 successive boiler operating days, ending with the last 30-day period in the quarter; reasons for non-compliance with the emission standards; and, description of corrective actions taken.

(3) Percent reduction of the potential combustion concentration of sulfur dioxide for each 30 successive boiler operating days, ending with the last 30-day period in the quarter; reasons for non-compliance with the standard; and, description of corrective actions taken.

(4) Identification of the boiler operating days for which pollutant or dilutent data have not been obtained by an approved method for at least 18 hours of operation of the facility; justification for not obtaining sufficient data; and description of corrective actions taken.

(5) Identification of the times when emissions data have been excluded from the calculation of average emission rates because of startup, shutdown, malfunction ($NO_x$ only), emergency conditions ($SO_2$ only), or other reasons, and justification for excluding data for reasons other than startup, shutdown, malfunction, or emergency conditions.

(6) Identification of "F" factor used for calculations, method of determination, and type of fuel combusted.

(7) Identification of times when hourly averages have been obtained based on manual sampling methods.

(8) Identification of the times when the pollutant concentration exceeded full span of the continuous monitoring system.

(9) Description of any modifications to the continuous monitoring system which could affect the ability of the continuous monitoring system to comply with Performance Specifications 2 or 3.

(c) If the minimum quantity of emission data as required by § 60.47a is not obtained for any 30 successive boiler operating days, the following information obtained under the requirements of § 60.46a(h) is reported to the Administrator for that 30-day period:

(1) The number of hourly averages available for outlet emission rates ($n_o$) and inlet emission rates ($n_i$) as applicable.

(2) The standard deviation of hourly averages for outlet emission rates ($s_o$) and inlet emission rates ($s_i$) as applicable.

(3) The lower confidence limit for the mean outlet emission rate ($E_o^*$) and the upper confidence limit for the mean inlet emission rate ($E_i^*$) as applicable.

(4) The applicable potential combustion concentration.

(5) The ratio of the upper confidence limit for the mean outlet emission rate ($E_o^*$) and the allowable emission rate ($E_{std}$) as applicable.

(d) If any standards under § 60.43a are exceeded during emergency conditions because of control system malfunction, the owner or operator of the affected facility shall submit a signed statement:

(1) Indicating if emergency conditions existed and requirements under § 60.46a(d) were met during each period, and

(2) Listing the following information:

(i) Time periods the emergency condition existed;

(ii) Electrical output and demand on the owner or operator's electric utility system and the affected facility;

(iii) Amount of power purchased from interconnected neighboring utility companies during the emergency period;

(iv) Percent reduction in emissions achieved;

(v) Atmospheric emission rate (ng/J) of the pollutant discharged; and

(vi) Actions taken to correct control system malfunction.

(e) If fuel pretreatment credit toward the sulfur dioxide emission standard under § 60.43a is claimed, the owner or operator of the affected facility shall submit a signed statement:

(1) Indicating what percentage cleaning credit was taken for the calendar quarter, and whether the credit was determined in accordance with the

provisions of § 60.48a and Method 19 (Appendix A); and

(2) Listing the quantity, heat content, and date each pretreated fuel shipment was received during the previous quarter; the name and location of the fuel pretreatment facility; and the total quantity and total heat content of all fuels received at the affected facility during the previous quarter.

(f) For any periods for which opacity, sulfur dioxide or nitrogen oxides emissions data are not available, the owner or operator of the affected facility shall submit a signed statement indicating if any changes were made in operation of the emission control system during the period of data unavailability. Operations of the control system and affected facility during periods of data unavailability are to be compared with operation of the control system and affected facility before and following the period of data unavailability.

(g) The owner or operator of the affected facility shall submit a signed statement indicating whether:

(1) The required continuous monitoring system calibration, span, and drift checks or other periodic audits have or have not been performed as specified.

(2) The data used to show compliance was or was not obtained in accordance with approved methods and procedures of this part and is representative of plant performance.

(3) The minimum data requirements have or have not been met; or, the minimum data requirements have not been met for errors that were unavoidable.

(4) Compliance with the standards has or has not been achieved during the reporting period.

(h) For the purposes of the reports required under § 60.7, periods of excess emissions are defined as all 6-minute periods during which the average opacity exceeds the applicable opacity standards under § 60.42a(b). Opacity levels in excess of the applicable opacity standard and the date of such excesses are to be submitted to the Administrator each calendar quarter.

(i) The owner or operator of an affected facility shall submit the written reports required under this section and subpart A to the Administrator for every calendar quarter. All quarterly reports shall be postmarked by the 30th day following the end of each calendar quarter.

(Sec. 114, Clean Air Act as amended (42 U.S.C. 7414).)

4. Appendix A to part 60 is amended by adding new reference Method 19 as follows:

**Appendix A—Reference Methods**

* * * * *

*Method 19. Determination of Sulfur Dioxide Removal Efficiency and Particulate, Sulfur Dioxide and Nitrogen Oxides Emission Rates From Electric Utility Steam Generators*

1. *Principle and Applicability*

1.1 *Principle.*

1.1.1 Fuel samples from before and after fuel pretreatment systems are collected and analyzed for sulfur and heat content, and the percent sulfur dioxide (ng/Joule, lb/million Btu) reduction is calculated on a dry basis. (Optional Procedure.)

1.1.2 Sulfur dioxide and oxygen or carbon dioxide concentration data obtained from sampling emissions upstream and downstream of sulfur dioxide control devices are used to calculate sulfur dioxide removal efficiencies. (Minimum Requirement.) As an alternative to sulfur dioxide monitoring upstream of sulfur dioxide control devices, fuel samples may be collected in an as-fired condition and analyzed for sulfur and heat content. (Optional Procedure.)

1.1.3 An overall sulfur dioxide emission reduction efficiency is calculated from the efficiency of fuel pretreatment systems and the efficiency of sulfur dioxide control devices.

1.1.4 Particulate, sulfur dioxide, nitrogen oxides, and oxygen or carbon dioxide concentration data obtained from sampling emissions downstream from sulfur dioxide control devices are used along with F factors to calculate particulate, sulfur dioxide, and nitrogen oxides emission rates. F factors are values relating combustion gas volume to the heat content of fuels.

1.2 *Applicability.* This method is applicable for determining sulfur removal efficiencies of fuel pretreatment and sulfur dioxide control devices and the overall reduction of potential sulfur dioxide emissions from electric utility steam generators. This method is also applicable for the determination of particulate, sulfur dioxide, and nitrogen oxides emission rates.

2. *Determination of Sulfur Dioxide Removal Efficiency of Fuel Pretreatment Systems*

2.1 *Solid Fossil Fuel.*

2.1.1 *Sample Increment Collection.* Use ASTM D 2234 [1], Type I, conditions A, B, or C, and systematic spacing. Determine the number and weight of increments required per gross sample representing each coal lot according to Table 2 or Paragraph 7.1.5.2 of ASTM D 2234 [1]. Collect one gross sample for each raw coal lot and one gross sample for each product coal lot.

2.1.2 *ASTM Lot Size.* For the purpose of Section 2.1.1, the product coal lot size is defined as the weight of product coal produced from one type of raw coal. The raw coal lot size is the weight of raw coal used to produce one product coal lot. Typically, the lot size is the weight of coal processsed in a 1-day (24 hours) period. If more than one type of coal is treated and produced in 1 day, then gross samples must be collected and analyzed for each type of coal. A coal lot size equaling the 90-day quarterly fuel quantity for a specific power plant may be used if representative sampling can be conducted for the raw coal and product coal.

Note.—Alternate definitions of fuel lot sizes may be specified subject to prior approval of the Administrator.

2.1.3 *Gross Sample Analysis.* Determine the percent sulfur content (%S) and gross calorific value (GCV) of the solid fuel on a dry basis for each gross sample. Use ASTM 2013 [1] for sample preparation, ASTM D 3177 [1] for sulfur analysis, and ASTM D 3173 [1] for moisture analysis. Use ASTM D 3176 [1] for gross calorific value determination.

2.2 *Liquid Fossil Fuel.*

2.2.1 *Sample Collection.* Use ASTM D 270 [1] following the practices outlined for continuous sampling for each gross sample representing each fuel lot.

2.2.2 *Lot Size.* For the purposes of Section 2.2.1, the weight of product fuel from one pretreatment facility and intended as one shipment (ship load, barge load, etc.) is defined as one product fuel lot. The weight of each crude liquid fuel type used to produce one product fuel lot is defined as one inlet fuel lot.

Note.— Alternate definitions of fuel lot sizes may be specified subject to prior approval of the Administrator.

Note.— For the purposes of this method, raw or inlet fuel (coal or oil) is defined as the fuel delivered to the desulfurization pretreatment facility or to the steam generating plant. For pretreated oil the input oil to the oil desulfurization process (e.g. hydrotreatment emitted) is sampled.

2.2.3 *Sample Analysis.* Determine the percent sulfur content (%S) and gross calorific value (GCV). Use ASTMD 240 [1] for the sample analysis. This value can be assumed to be on a dry basis.

[1] Use the most recent revision or designation of the ASTM procedure specified.

[1] Use the most recent revision or designation of the ASTM procedure specified.

2.3 *Calculation of Sulfur Dioxide Removal Efficiency Due to Fuel Pretreatment.* Calculate the percent sulfur dioxide reduction due to fuel pretreatment using the following equation:

$$\%R_f = 100\left[1 - \frac{\%S_o/GCV_o}{\%S_i/GCV_i}\right]$$

Where:

$\%R_f$ = Sulfur dioxide removal efficiency due pretreatment; percent.

$\%S_o$ = Sulfur content of the product fuel lot on a dry basis; weight percent.

$\%S_i$ = Sulfur content of the inlet fuel lot on a dry basis; weight percent.

$GCV_o$ = Gross calorific value for the outlet fuel lot on a dry basis; kJ/kg (Btu/lb).

$GCV_i$ = Gross calorific value for the inlet fuel lot on a dry basis; kJ/kg (Btu/lb).

Note.—If more than one fuel type is used to produce the product fuel, use the following equation to calculate the sulfur contents per unit of heat content of the total fuel lot, %S/GCV:

$$\%S/GCV = \sum_{k=1}^{n} Y_k(\%S_k/GCV_k)$$

Where:

$Y_k$ = The fraction of total mass input derived from each type, k, of fuel.

$\%S_k$ = Sulfur content of each fuel type, k, on a dry basis; weight percent.

$GCV_k$ = Gross calorific value for each fuel type, k, on a dry basis; kJ/kg (Btu/lb).

n = The number of different types of fuels.

3. *Determination of Sulfur Removal Efficiency of the Sulfur Dioxide Control Device*

3.1 *Sampling.* Determine $SO_2$ emission rates at the inlet and outlet of the sulfur dioxide control system according to methods specified in the applicable subpart of the regulations and the procedures specified in Section 5. The inlet sulfur dioxide emission rate may be determined through fuel analysis (Optional, see Section 3.3.)

3.2 *Calculation.* Calculate the percent removal efficiency using the following equation:

$$\%R_{g(m)} = 100 \times \left(1.0 - \frac{E_{SO_2o}}{E_{SO_2i}}\right)$$

Where:

$\%R_g$ = Sulfur dioxide removal efficiency of the sulfur dioxide control system using inlet and outlet monitoring data; percent.

$E_{SO_2o}$ = Sulfur dioxide emission rate from the outlet of the sulfur dioxide control system; ng/J (lb/million Btu).

$E_{SO_2i}$ = Sulfur dioxide emission rate to the outlet of the sulfur dioxide control system; ng/J (lb/million Btu).

3.3 *As-fired Fuel Analysis (Optional Procedure).* If the owner or operator of an electric utility steam generator chooses to determine the sulfur dioxide imput rate at the inlet to the sulfur dioxide control device through an as-fired fuel analysis in lieu of data from a sulfur dioxide control system inlet gas monitor, fuel samples must be collected in accordance with applicable paragraph in Section 2. The sampling can be conducted upstream of any fuel processing, e.g., plant coal pulverization. For the purposes of this section, a fuel lot size is defined as the weight of fuel consumed in 1 day (24 hours) and is directly related to the exhaust gas monitoring data at the outlet of the sulfur dioxide control system.

3.3.1 *Fuel Analysis.* Fuel samples must be analyzed for sulfur content and gross calorific value. The ASTM procedures for determining sulfur content are defined in the applicable paragraphs of Section 2.

3.3.2 *Calculation of Sulfur Dioxide Input Rate.* The sulfur dioxide imput rate determined from fuel analysis is calculated by:

$$I_s = \frac{2.0(\%S_f)}{GCV} \times 10^7 \text{ for S. I. units.}$$

$$I_s = \frac{2.0(\%S_f)}{GCV} \times 10^4 \text{ for English units.}$$

Where:

$I_s$ = Sulfur dioxide input rate from as-fired fuel analysis, ng/J (lb/million Btu).

$\%S_f$ = Sulfur content of as-fired fuel, on a dry basis; weight percent.

GCV = Gross calorific value for as-fired fuel, on a dry basis; kJ/kg (Btu/lb).

3.3.3 *Calculation of Sulfur Dioxide Emission Reduction Using As-fired Fuel Analysis.* The sulfur dioxide emission reduction efficiency is calculated using the sulfur imput rate from paragraph 3.3.2 and the sulfur dioxide emission rate, $E_{SO_2}$, determined in the applicable paragraph of Section 5.3. The equation for sulfur dioxide emission reduction efficiency is:

$$\%R_{g(f)} = 100 \times \left(1.0 - \frac{E_{SO_2}}{I_s}\right)$$

Where:

$\%R_{g(f)}$ = Sulfur dioxide removal efficiency of the sulfur dioxide control system using as-fired fuel analysis data; percent.

$E_{SO_2}$ = Sulfur dioxide emission rate from sulfur dioxide control system; ng/J (lb/million Btu).

$I_s$ = Sulfur dioxide input rate from as-fired fuel analysis; ng/J (lb/million Btu).

4. *Calculation of Overall Reduction in Potential Sulfur Dioxide Emission*

4.1 The overall percent sulfur dioxide reduction calculation uses the sulfur dioxide concentration at the inlet to the sulfur dioxide control device as the base value. Any sulfur reduction realized through fuel cleaning is introduced into the equation as an average percent reduction, $\%R_f$.

4.2 Calculate the overall percent sulfur reduction as:

$$\%R_o = 100[1.0 - (1.0 - \frac{\%R_f}{100})(1.0 - \frac{\%R_g}{100})]$$

Where:

$\%R_o$ = Overall sulfur dioxide reduction; percent.

$\%R_f$ = Sulfur dioxide removal efficiency of fuel pretreatment from Section 2; percent. Refer to applicable subpart for definition of applicable averaging period.

$\%R_g$ = Sulfur dioxide removal efficiency of sulfur dioxide control device either $O_2$ or $CO_2$ - based calculation or calculated from fuel analysis and emission data, from Section 3; percent. Refer to applicable subpart for definition of applicable averaging period.

5. *Calculation of Particulate, Sulfur Dioxide, and Nitrogen Oxides Emission Rates*

5.1 *Sampling.* Use the outlet $SO_2$ or $O_2$ or $CO_2$ concentrations data obtained in Section 3.1. Determine the particulate, $NO_x$, and $O_2$ or $CO_2$ concentrations according to methods specified in an applicable subpart of the regulations.

5.2 *Determination of an F Factor.* Select an average F factor (Section 5.2.1) or calculate an applicable F factor (Section 5.2.2.). If combined fuels are fired, the selected or calculated F factors are prorated using the procedures in Section 5.2.3. F factors are ratios of the gas volume released during combustion of a fuel divided by the heat content of the fuel. A dry F factor ($F_d$) is the ratio of the volume of dry flue gases generated to the calorific value of the fuel combusted; a wet F factor ($F_w$) is the ratio of the volume of wet flue gases generated to the calorific value of the fuel combusted; and the carbon F factor ($F_c$) is the ratio of the volume of carbon dioxide generated to the calorific value of the fuel combusted. When pollutant and oxygen concentrations have been determined in Section 5.1, wet or dry F factors are used. ($F_w$) factors and associated emission calculation procedures are not applicable and may not be used after wet scrubbers; ($F_c$) or ($F_d$) factors and associated emission calculation procedures are used after wet scrubbers.) When pollutant and carbon dioxide concentrations have been determined in Section 5.1, $F_c$ factors are used.

5.2.1 *Average F Factors.* Table 1 shows average $F_d$, $F_w$, and $F_c$ factors (scm/J, scf/million Btu) determined for commonly used fuels. For fuels not listed in Table 1, the F factors are calculated according to the procedures outlined in Section 5.2.2 of this section.

5.2.2 *Calculating an F Factor.* If the fuel burned is not listed in Table 1 or if the owner or operator chooses to determine an F factor rather than use the tabulated data, F factors are calculated using the equations below. The sampling and analysis procedures followed in obtaining data for these calculations are subject to the approval of the Administrator and the Administrator should be consulted prior to data collection.

For SI Units:

$$F_d = \frac{227.0(\%H) + 95.7(\%C) + 35.4(\%S) + 8.6(\%N) - 28.5(\%O)}{GCV}$$

$$F_w = \frac{347.4(\%H)+95.7(\%C)+35.4(\%S)+8.6(\%N)-28.5(\%O)+13.0(\%H_2O)^{**}}{GCV_w}$$

$$F_c = \frac{20.0(\%C)}{GCV}$$

For English Units:

$$F_d = \frac{10^6[5.57(\%H) + 1.53(\%C) + 0.57(\%S) + 0.14(\%N) - 0.46(\%O)]}{GCV}$$

$$F_w = \frac{10^6[5.57(\%H)+1.53(\%C)+0.57(\%S)+0.14(\%N)-0.46(\%O)+0.21(\%H_2O)^{**}]}{GCV_w}$$

$$F_c = \frac{10^6[0.321(\%C)]}{GCV}$$

**The $\%H_2O$ term may be omitted if %H and %O include the unavailable hydrogen and oxygen in the form of $H_2O$.

Where:

$F_d$, $F_w$, and $F_c$ have the units of scm/J, or scf/million Btu; %H, %C, %S, %N, %O, and $\%H_2O$ are the concentrations by weight (expressed in percent) of hydrogen, carbon, sulfur, nitrogen, oxygen, and water from an ultimate analysis of the fuel; and GCV is the gross calorific value of the fuel in kJ/kg or Btu/lb and consistent with the ultimate analysis. Follow ASTM D 2015* for solid fuels, D 240* for liquid fuels, and D 1826* for gaseous fuels as applicable in determining GCV.

5.2.3 *Combined Fuel Firing F Factor.* For affected facilities firing combinations of fossil fuels or fossil fuels and wood residue, the $F_d$, $F_w$, or $F_c$ factors determined by Sections 5.2.1 or 5.2.2 of this section shall be prorated in accordance with applicable formula as follows:

$$F_d = \sum_{k=1}^{n} x_k F_{dk} \quad \text{or}$$

$$F_w = \sum_{k=1}^{n} x_k F_{wk} \quad \text{or}$$

$$F_c = \sum_{k=1}^{n} x_k F_{ck}$$

Where:

$x_k$ = The fraction of total heat input derived from each type of fuel, K.

n = The number of fuels being burned in combination.

5.3 *Calculation of Emission Rate.* Select from the following paragraphs the applicable calculation procedure and calculate the particulate, $SO_2$, and $NO_x$ emission rate. The values in the equations are defined as

E = Pollutant emission rate ng/J (lb/million Btu).

C = Pollutant concentration, ng/scm (lb/scf).

**Note.**—It is necessary in some cases to convert measured concentration units to other units for these calculations.

Use the following table for such conversions:

**Conversion Factors for Concentration**

| From— | To— | Multiply by— |
|---|---|---|
| g/scm | ng/scm | $10^9$ |
| mg/scm | ng/scm | $10^6$ |
| lb/scf | ng/scm | $1.602 \times 10^{13}$ |
| lb/dscf | ng/scm | $2.660 \times 10^{13}$ |
| lb/scf | ng/scm | $1.912 \times 10^{13}$ |
| lb/dscf | lb/scf | $1.660 \times 10^{-1}$ |
| lb/scf | lb/scf | $1.194 \times 10^{-1}$ |

5.3.1 *Oxygen-Based F Factor Procedure.*

5.3.1.1 *Dry Basis.* When both percent oxygen ($\%O_{2d}$) and the pollutant concentration ($C_d$) are measured in the flue gas on a dry basis, the following equation is applicable:

$$E = C_d F_d \left[\frac{20.9}{20.9 - \%O_{2d}}\right]$$

5.3.1.2 *Wet Basis.* When both the percent oxygen ($\%O_{2w}$) and the pollutant concentration ($C_w$) are measured in the flue gas on a wet basis, the following equations are applicable: (Note: $F_w$ factors are not applicable after wet scrubbers.)

$$\text{(a)} \quad E = C_w F_w \left[\frac{20.9}{20.9(1 - B_{wa}) - \%O_{2w}}\right]$$

Where:

$B_{wa}$ = Proportion by volume of water vapor in the ambient air.

In lieu of actual measurement, $B_{wa}$ may be estimated as follows:

**Note.**—The following estimating factors are selected to assure that any negative error introduced in the term:

$$\left(\frac{20.9}{20.9(1 - B_{wa}) - \%O_{2ws}}\right)$$

will not be larger than −1.5 percent. However, positive errors, or overestimation of emissions, of as much as 5 percent may be introduced depending upon the geographic location of the facility and the associated range of ambient moisture.

(i) $B_{wa}$ = 0.027. This factor may be used as a constant value at any location.

(ii) $B_{wa}$ = Highest monthly average of $B_{wa}$ which occurred within a calendar year at the nearest Weather Service Station.

(iii) $B_{wa}$ = Highest daily average of $B_{wa}$ which occurred within a calendar month at the nearest Weather Service Station, calculated from the data for the past 3 years. This factor shall be calculated for each month and may be used as an estimating factor for the respective calendar month.

$$\text{(b)} \quad E = C_w F_d \left[\frac{20.9}{20.9(1 - B_{ws}) - \%O_{2w}}\right]$$

Where:

$B_{ws}$ = Proportion by volume of water vapor in the stack gas

5.3.1.3 *Dry/Wet Basis.* When the pollutant concentration ($C_w$) is measured on a wet basis and the oxygen concentration ($\%O_{2d}$) or measured on a dry basis, the following equation is applicable

$$E = \left[\frac{C_w F_d}{(1 - B_{ws})}\right] \left[\frac{20.9}{20.9 - \%O_{2d}}\right]$$

When the pollutant concentration ($C_d$) is measured on a dry basis and the oxygen concentration ($\%O_{2d}$) is measured on a wet basis, the following equation is applicable:

$$E = C_d F_d \frac{20.9}{20.9 - \left(\frac{\%O_{2w}}{1 - B_{ws}}\right)}$$

5.3.2 *Carbon Dioxide-Based F Factor Procedure.*

5.3.2.1 *Dry Basis.* When both the percent carbon dioxide ($\%CO_{2d}$) and the pollutant concentration ($C_d$) are measured in the flue gas on a dry basis, the following equation is applicable:

$$E = C_d F_c \left(\frac{100}{\%CO_{2d}}\right)$$

5.3.2.2 *Wet Basis.* When both the percent carbon dioxide ($\%CO_{2w}$) and the pollutant concentration ($C_w$) are measured on a wet basis, the following equation is applicable:

$$E = C_w F_c \left(\frac{100}{\%CO_{2w}}\right)$$

5.3.2.3 *Dry/Wet Basis.* When the pollutant concentration ($C_w$) is measured on a wet basis and the percent carbon dioxide ($\%CO_{2d}$) is measured on a dry basis, the following equation is applicable:

$$E = \left[\frac{C_w F_c}{(1 - B_{ws})}\right] \left[\frac{100}{\%CO_{2d}}\right]$$

When the pollutant concentration ($C_d$) is measured on a dry basis and the precent carbon dioxide ($\%CO_{2w}$) is measured on a wet basis, the following equation is applicable:

$$E = C_d (1 - B_{ws}) F_c \left(\frac{100}{\%CO_{2w}}\right)$$

5.4 *Calculation of Emission Rate from Combined Cycle-Gas Turbine Systems.* For gas turbine-steam generator combined cycle systems, the emissions from supplemental fuel fired to the steam generator or the percentage reduction in potential ($SO_2$) emissions cannot be determined directly. Using measurements from the gas turbine exhaust (performance test, subpart GG) and the combined exhaust gases from the steam generator, calculate the emission rates for these two points following the appropriate paragraphs in Section 5.3.

**Note.**—$F_w$ factors shall not be used to determine emission rates from gas turbines because of the injection of steam nor to calculate emission rates after wet scrubbers; $F_d$ or $F_c$ factor and associated calculation procedures are used to combine effluent emissions according to the procedure in Paragraph 5.2.3.

The emission rate from the steam generator is calculated as:

$$E_{sg} = \frac{E_c - X_{gt} E_{gt}}{X_{sg}}$$

Where:

$E_{sg}$ = Pollutant emission rate from steam generator effluent, ng/J (lb/million Btu).
$E_c$ = Pollutant emission rate in combined cycle effluent; ng/J (lb/million Btu).
$E_{gt}$ = Pollutant emission rate from gas turbine effluent; ng/J (lb/million Btu).
$X_{sg}$ = Fraction of total heat input from supplemental fuel fired to the steam generator.
$X_{gt}$ = Fraction of total heat input from gas turbine exhaust gases.

Note.—The total heat input to the steam generator is the sum of the heat input from supplemental fuel fired to the steam generator and the heat input to the steam generator from the exhaust gases from the gas turbine.

5.5 *Effect of Wet Scrubber Exhaust, Direct-Fired Reheat Fuel Burning.* Some wet scrubber systems require that the temperature of the exhaust gas be raised above the moisture dew-point prior to the gas entering the stack. One method used to accomplish this is directfiring of an auxiliary burner into the exhaust gas. The heat required for such burners is from 1 to 2 percent of total heat input of the steam generating plant. The effect of this fuel burning on the exhaust gas components will be less than ±1.0 percent and will have a similar effect on emission rate calculations. Because of this small effect, a determination of effluent gas constituents from direct-fired reheat burners for correction of stack-gas concentrations is not necessary.

**Table 19-1.—*F Factors for Various fuels*** [a]

| Fuel type | $F_d$ dscm/J | $F_d$ dscf/$10^6$ Btu | $F_w$ wscm/J | $F_w$ wscf/$10^6$ Btu | $F_c$ scm/J | $F_c$ scf/$10^6$ Btu |
|---|---|---|---|---|---|---|
| Coal: | | | | | | |
| Anthracite [b] | $2.71 \times 10^{-7}$ | (10100) | $2.83 \times 10^{-7}$ | (10540) | $0.530 \times 10^{-7}$ | (1970) |
| Bituminous [b] | $2.63 \times 10^{-7}$ | (9780) | $2.86 \times 10^{-7}$ | (10640) | $0.484 \times 10^{-7}$ | (1800) |
| Lignite | $2.65 \times 10^{-7}$ | (9860) | $3.21 \times 10^{-7}$ | (11950) | $0.513 \times 10^{-7}$ | (1910) |
| Oil [b] | $2.47 \times 10^{-7}$ | (9190) | $2.77 \times 10^{-7}$ | (10320) | $0.383 \times 10^{-7}$ | (1420) |
| Gas: | | | | | | |
| Natural | $2.43 \times 10^{-7}$ | (8710) | $2.85 \times 10^{-7}$ | (10610) | $0.287 \times 10^{-7}$ | (1040) |
| Propane | $2.34 \times 10^{-7}$ | (8710) | $2.74 \times 10^{-7}$ | (10200) | $0.321 \times 10^{-7}$ | (1190) |
| Butane | $2.34 \times 10^{-7}$ | (8710) | $2.79 \times 10^{-7}$ | (10390) | $0.337 \times 10^{-7}$ | (1250) |
| Wood | $2.48 \times 10^{-7}$ | (9240) | ..... | ..... | $0.492 \times 10^{-7}$ | (1830) |
| Wood Bark | $2.56 \times 10^{-7}$ | (9600) | ..... | ..... | $0.497 \times 10^{-7}$ | (1850) |

[a] As classified according to ASTM D.388-66.
[b] Crude, residual, or distillate.
[c] Determined at standard conditions: 20° C (68° F) and 760 mm Hg (29.92 in. Hg).

6. *Calculation of Confidence Limits for Inlet and Outlet Monitoring Data*

6.1 *Mean Emission Rates.* Calculate the mean emission rates using hourly averages in ng/J (lb/million Btu) for $SO_2$ and $NO_x$ outlet data and, if applicable, $SO_2$ inlet data using the following equations:

$$E_o = \frac{\Sigma x_o}{n_o}$$

$$E_i = \frac{\Sigma x_i}{n_i}$$

Where:

$E_o$ = Mean outlet emission rate; ng/J (lb/million Btu).
$E_i$ = Mean inlet emission rate; ng/J (lb/million Btu).
$x_o$ = Hourly average outlet emission rate; ng/J (lb/million Btu).
$x_i$ = Hourly average in let emission rate; ng/j (lb/million Btu).
$n_o$ = Number of outlet hourly averages available for the reporting period.
$n_i$ = Number of inlet hourly averages available for reporting period.

6.2 *Standard Deviation of Hourly Emission Rates.* Calculate the standard deviation of the available outlet hourly average emission rates for $SO_2$ and $NO_x$ and, if applicable, the available inlet hourly average emission rates for $SO_2$ using the following equations:

$$s_o = \left(\sqrt{\frac{1}{n_o} - \frac{1}{720}}\right)\left(\sqrt{\frac{\Sigma (E_o - x_o)^2}{n_o - 1}}\right)$$

$$s_i = \left(\sqrt{\frac{1}{n_i} - \frac{1}{720}}\right)\left(\sqrt{\frac{\Sigma (E_i - x_i)^2}{n_i - 1}}\right)$$

Where:

$s_o$ = Standard deviation of the average outlet hourly average emission rates for the reporting period; ng/J (lb/million Btu).
$s_i$ = Standard deviation of the average inlet hourly average emission rates for the reporting period; ng/J (lb/million Btu).

6.3 *Confidence Limits.* Calculate the lower confidence limit for the mean outlet emission rates for $SO_2$ and $NO_x$ and, if applicable, the upper confidence limit for the mean inlet emission rate for $SO_2$ using the following equations:

$$E_o^* = E_o - t_{0.95} s_o$$
$$E_i^* = E_i + t_{0.95} s_i$$

Where:

$E_o^*$ = The lower confidence limit for the mean outlet emission rates; ng/J (lb/million Btu).
$E_i^*$ = The upper confidence limit for the mean inlet emission rate; ng/J (lb/million Btu).
$t_{0.95}$ = Values shown below for the indicated number of available data points (n):

| $n$ | Values for $t_{0.95}$ |
|---|---|
| 2 | 6.31 |
| 3 | 2.42 |
| 4 | 2.35 |
| 5 | 2.13 |
| 6 | 2.02 |
| 7 | 1.94 |
| 8 | 1.89 |
| 9 | 1.86 |
| 10 | 1.83 |
| 11 | 1.81 |
| 12-16 | 1.77 |
| 17-21 | 1.73 |
| 22-26 | 1.71 |
| 27-31 | 1.70 |
| 32-51 | 1.68 |
| 52-91 | 1.67 |
| 92-151 | 1.66 |
| 152 or more | 1.65 |

The values of this table are corrected for n-1 degrees of freedom. Use n equal to the number of hourly average data points.

7. *Calculation to Demonstrate Compliance When Available Monitoring Data Are Less Than the Required Minimum*

7.1 *Determine Potential Combustion Concentration (PCC) for $SO_2$.*

7.1.1 When the removal efficiency due to fuel pretreatment (% $R_f$) is included in the overall reduction in potential sulfur dioxide emissions (% $R_o$) and the "as-fired" fuel analysis is not used, the potential combustion concentration (PCC) is determined as follows:

$$PCC = E_i^* + 2\left(\frac{\% S_i}{GCV_i} - \frac{\% S_o}{GCV_o}\right) 10^7;\ ng/J$$

$$PCC = E_i^* + 2\left(\frac{\% S_i}{GCV_i} - \frac{\% S_o}{GCV_o}\right) 10^4;\ lb/million\ Btu.$$

Where:

$\left(\frac{\% S_i}{GCV_i} - \frac{\% S_o}{GCV_o}\right)$ = Potential emissions removed by the pretreatment process, using the fuel parameters defined in section 2.3; ng/J (lb/million Btu).

7.1.2 When the "as-fired" fuel analysis is used and the removal efficiency due to fuel pretreatment (% $R_f$) is not included in the overall reduction in potential sulfur dioxide emissions (% $R_o$), the potential combustion concentration (PCC) is determined as follows:

$PCC = I_s$

Where:

$I_s$ = The sulfur dioxide input rate as defined in section 3.3

7.1.3 When the "as-fired" fuel analysis is used and the removal efficiency due to fuel pretreatment (% $R_f$) is included in the overall reduction (% $R_o$), the potential combustion concentration (PCC) is determined as follows:

$$PCC = I_s + 2\left(\frac{\% S_f}{GCV_f} - \frac{\% S_o}{GCV_o}\right)10^7;\ ng/J$$

$$PCC = I_s + 2\left(\frac{\% S_f}{GCV_f} - \frac{\% S_o}{GCV_o}\right)10^4;\ lb/million\ Btu.$$

7.1.4 When inlet monitoring data are used and the removal efficiency due to fuel pretreatment (% $R_f$) is not included in the overall reduction in potential sulfur dioxide emissions (% $R_o$), the potential combustion concentration (PCC) is determined as follows:

$PCC = E_i^*$

Where:

$E_i^*$ = The upper confidence limit of the mean inlet emission rate, as determined in section 6.3.

7.2 *Determine Allowable Emission Rates* ($E_{std}$).

7.2.1 *$NO_x$*. Use the allowable emission rates for $NO_x$ as directly defined by the applicable standard in terms of ng/J (lb/million Btu).

7.2.2 *$SO_2$*. Use the potential combustion concentration (PCC) for $SO_2$ as determined in section 7.1, to determine the applicable emission standard. If the applicable standard is an allowable emission rate in ng/J (lb/million Btu), the allowable emission rate is used as $E_{std}$. If the applicable standard is an allowable percent emission, calculate the allowable emission rate ($E_{std}$) using the following equation:

$E_{std} = \%\ PCC/100$

Where:

% PCC = Allowable percent emission as defined by the applicable standard; percent.

7.3 *Calculate $E_o^*/E_{std}$*. To determine compliance for the reporting period calculate the ratio:

$E_o^*/E_{std}$

Where:

$E_o^*$ = The lower confidence limit for the mean outlet emission rates, as defined in section 6.3; ng/J (lb/million Btu).

$E_{std}$ = Allowable emission rate as defined in section 7.2; ng/J (lb/million Btu).

If $E_o^*/E_{std}$ is equal to or less than 1.0, the facility is in compliance; if $E_o^*/E_{std}$ is greater than 1.0, the facility is not in compliance for the reporting period.

[FR Doc. 79-17607 Filed 6-8-79; 8:45 am]
BILLING CODE 6560-01-M

**SUMMARY:** EPA proposes to adjust the NSPS opacity standard applicable to Southwestern Public Service Company's Harrington Station Unit #1 in Amarillo, Texas. The proposal is based upon Southwestern's demonstration of the conditions that entitle it to such an adjustment under 40 CFR 60.11(e).

**DATES:** Comments must be received on or before July 30, 1979.

**ADDRESSES:** Comments should be submitted in writing to: Edward E. Reich, Director, Division of Stationary Source Enforcement (EN-341), Environmental Protection Agency, 401 M Street S.W., Washington, D.C. 20460. Background information and comments upon the proposed standard will be available for public inspection and copying at the EPA Public Information Reference Unit, Room 2992 (EPA Library), 401 M Street S.W., Washington, D.C. 20460 Specify Docket No. EN 79-13.

**FOR FURTHER INFOMATION CONTACT:** Richard Biondi, Division of Stationary Source Enforcement (EN-341), Environmental Protection Agency, 401 M Street S.W., Washington, D.C. 20460, telephone no. 202-755-2564.

**SUPPLEMENTARY INFORMATION:** The Standards of performance for fossil fuel-fired steam generators as promulgated under Subpart D of Part 60 on December 23, 1971 (36 FR 24876) and amended on December 5, 1977 (42 FR 61537) allow emissions of up to 20 percent opacity, except that 27 percent opacity is allowed for one 6-minute period in any hour. This standard also requires reporting as excess emissions all hourly periods during which there are two or more six-minute periods when the averages opacity exceeds 20 percent.

On December 15, 1977, Southwestern Public Service Company (SPSC) of Amarillo, Texas, petitioned the Administrator under 40 CFR 60.11(e) to adjust the NSPS 20% opacity standard applicable to its Harrington Station coal fired Unit #1 in Amarillo, Texas. The Administrator proposes to grant the petition for adjustment, as SPSC has demonstrated the presence at its Harrington Station Unit #1 of the conditions that entitle it to such relief, as specified in 40 CFR 60.11(e)(3).

On the basis of performance tests conducted on July 18-20, 1977, the Administrator determined that Unit #1 was in compliance with all applicable new source performance standards except opacity. Six minute opacity average during the test indicated results as high as 35-38% while a previously recorded value showed a maximum of 47.8% on July 16, 1977. By letter of December 5, 1977, SPSC was notified of the Administrator's finding and its right to petition for adjustment of the opacity standard, which it did in a timely manner.

## Standards of Performance for New Stationary Sources; Adjustment of Opacity Standard for Fossil Fuel Fired Steam Generator

In its petition for adjustment of the opacity standard, SPSC made the following showing: (a) the affected facility and associated air pollution control equipment were operated and maintained in a manner to minimize the opacity of emissions during the performance tests; (b) the tests were performed under the conditions established by the Administrator, and (c) the affected facility and associated air pollution control equipment were incapable of being adjusted or operated to meet the applicable opacity standard.

As described in the March 8, 1974 **Federal Register** (39 FR 9308), the Agency utilizes opacity standards as a means to ensure proper operation and maintenance of control systems on a day to day basis. Opacity standards are regulatory requirements, just like the concentration/mass standards. They are separate standards and it is not necessary to show a violation of the mass standard to support enforcement of the opacity standard. Where opacity and concentration/mass standards are applicable to the same source, the opacity standard is not more restrictive than the concentration/mass standard. The concentration/mass standard is established at a level which will result in the design, installation, and operation of the best adequately demonstrated system of emission reduction (taking costs into account) for each source.

The control method used by SPSC at Harrington Station Unit #1 is a hybrid system that uses an electrostatic precipitator and a marble bed scrubber. Although the system can be altered to meet the 20% opacity standard, the cost of such alteration is excessive in view of the system's current effectiveness in meeting all NSPS emission limitations except opacity. Twenty percent opacity could be achieved only by a four-fold increase in pressure drop on the marble bed scrubber (from 15 cm $H_2O$ to 60 cm $H_2O$), or by a 30% increase in the specific collector area of the electrostatic precipitator. Increasing the pressure drop to 60 cm $H_2O$ would require an additional $1.5 million annually for operation and maintenance, and would require that the scrubber be redesigned to operate at the increased pressure drop. Increasing the specific collector area of the electrostatic precipitator would cost approximately an additional $4 million. Since this facility can meet the mass standard with the equipment installed, it does not appear that the extensive redesign and increased costs are warranted.

**AGENCY:** Environmental Protection Agency (EPA).

**ACTION:** Proposed Rule.

In view of the above, EPA proposes that SPSC's Harrington Station Unit #1 be excused from compliance with the 20% opacity standard of 40 CFR 60.42(a)(2). As an alternative, it is proposed that SPSC shall not cause to be discharged into the atmosphere from Harrington Station Unit #1 any gases which exhibit greater than 35% opacity, except that a maximum of 42% opacity shall be permitted for not more than one 6 minute period in any hour. The adjustment will not relieve SPSC of its obligation to comply with any other federal, state or local opacity requirements.

**Authority:** This amendment is proposed under the authority of Sections 111 and 301(a) of the Clean Air Act, as amended (42 U.S.C. 7411 and 7601(a)).

Dated: June 19, 1979

**Douglas M Costle,**

*Administrator.*

In consideration of the foregoing, it is proposed to amend Part 60 of 40 CFR Chapter I as follows:

## Subpart D—Standards of Performance for Fossil Fuel-Fired Steam Generators

1. Section 60.42 is amended by adding paragraph (b)(1) as follows:

**§ 60.42 Standard for particulate matter.**

(a) * * *

(b)(1) Southwestern Public Service Company shall not cause to be discharged into the atmosphere from its Harrington Station Unit #1 in Amarillo, Texas, any gases which exhibit greater than 35% opacity, except that a maximum of 42% opacity shall be permitted for not more than 6 minutes in any hour.

(Sec. 111, 301(a), Clean Air Act as amended (42 U.S.C. 7411, 7601.))

2. Section 60.45(g)(1) is amended by adding paragraph (i) as follows:

**§ 60.45 Emission and fuel monitoring.**

* * * * *

(g) * * *

(1) * * *

(i) For sources subject to the opacity standard of Section 60.42(b)(1), excession emissions are defined as any six-minute period during which the average opacity of emissions exceeds 35 percent opacity, except that one six-minute average per hour of up to 42 percent opacity need not be reported.

[FR Doc 79-20156 Filed 6-28-79; 8:45 am]

BILLING CODE 6560-01-M

## ENVIRONMENTAL PROTECTION AGENCY

[40 CFR Parts 51 and 52]

[FRL 1084-7, Docket No. OAQPS-79-12]

### Emission Monitoring of Stationary Sources

**AGENCY:** Environmental Protection Agency.

**ACTION:** Advance Notice of Proposed Rulemaking.

**SUMMARY:** Under authority granted in sections 110, 114, and 301 of the Clean Air Act, EPA has established a program of source surveillance and specifically of continuous monitoring for certain significant stationary sources. Current programs for source monitoring generally do not determine compliance of sources with emission regulations on anything but an infrequent basis. This proposed action arises from the need for control agencies to be assured that regulated sources are meeting emission limitations on a continual basis. EPA, in light of the above, is contemplating actions to improve, expand, and expedite implementation of the continuous emission monitoring requirements for certain stationary sources. Comments are solicited on specific issues and aspects related to this contemplated action.

**DATE:** Comments received on or before October 9, 1979 will be considered by EPA.

**ADDRESS:** Comments should be submitted (in duplicate, if possible) to: Central Docket Section, (A-130), Environmental Protection Agency, 401 M Street SW., Washington, DC 20460, Attention: Docket No. OAQPS-79-12.

Docket No. OAQPS-79-12, containing material relevant to this rulemaking, is located in the U.S. Environmental Protection Agency, Central Docket Section, Room 2903B, 401 M. Street, SW, Washington, DC 20460. The docket may be inspected between 8:00 a.m. and 4:00 p.m. on weekdays and a reasonable fee may be charged for copying.

**FOR FURTHER INFORMATION CONTACT:** Mr. Darryl D. Tyler, Environmental Protection Agency, (MD-15), Research Triangle Park, North Carolina 27711 Phone: (919) 541-5425.

**SUPPLEMENTARY INFORMATION:** The Environmental Protection Agency intends to develop regulations which will refine and expand certain portions of Title 40 of the Code of Federal Regulations, in particular, the continuous monitoring requirements of § 51.19(e). In addition, among other options, the Agency is contemplating taking actions which will expedite the implementation of the continuous monitoring requirements through the promulgation of requirements in 40 CFR, Part 52, and the use of authority granted to EPA by section 114 of the Clean Air Act.

Section 110(a)(2)(F) (ii) and (iii) of the Clean Air Act is the basis for EPA's State Implementation Plan requirements found in 40 CFR 51 and 52. This authority requires State Implementation Plans to contain legally enforceable procedures which require owners or operators of stationary sources to install equipment to monitor emissions from such sources and to report the data obtained. Section 114, which could be used to expedite implementation of the source surveillance requirements, further authorizes the Administrator to require any owner or operator of an emission source to "install, use, and maintain such monitoring equipment or methods . . . as he may reasonably require."

By the above regulations and associated administrative actions, certain existing air pollutant emission sources would be required to install and properly operate equipment which will continuously monitor parameters such as opacity (a measure of light attenuation caused by exhaust gases), sulfur dioxide, or certain operating parameters with respect to the control equipment.

To expedite the program, sources could be required, by administrative action, to install the monitors within one year of promulgation of the regulations: authority for this requirement lies in section 114 of the Act. State assumption of the program would be undertaken as a follow-up through the routine time schedules specified under Part 51 of Title 40.

The primary purpose of this notice is to inform interested parties of EPA's intent to begin a process which may result in additional requirements on States to adopt regulations and subsequently for sources to implement regulations concerning the measurement of emissions from stationary sources on a continual basis. Additionally, this Notice solicits comments on the practicability and the utility of these potential requirements.

Comment should be addressed, but not limited, to the following: (a) Is one year to comply with the requirements sufficient to acquire, install, and test the monitoring system?

(b) What sources should be included for technical evaluation?

(c) Will the program be effective in providing a qualitative and/or quantitative basis for ensuring continual compliance?

(d) Will the air quality benefits achieved offset the capital and operating expenditures required?

(e) Is fuel analysis a viable option to monitor $SO_2$ emissions for large (greater than 250 million BTU/HR) boilers?

(f) Fuel analysis procedures and experiences.

(g) Reliability of continuous monitoring equipment.

(h) Experience in installation, operation and maintenance of continuous monitoring equipment.

(i) The technical feasibility of continuous monitoring.

(j) Alternative methods to continuous monitoring.

(k) Experience in use of continuous monitoring data as an enforcement tool.

(l) Quality assurance procedures used to ensure valid data.

(m) Experience in correlating continuous monitoring data and performance test.

(n) Control agency and source experiences with continuous monitoring and the benefits derived.

(o) Cost of installation and operation of continuous monitoring equipment.

(p) Estimated resource impacts on States and local air pollution agencies and on air pollution sources: and

(q) Experience to date with the use of continuous mass emission monitors.

Comments submitted in accordance with the September 19, 1978, Federal Register Proposal on Electric Utility Steam Generating Units need not be resubmitted as these comments will automatically be considered during the regulatory development process.

Copies of the development plan which serves as the operating plan for the proposed regulatory development process will be available for public inspection and copying at the EPA Central Docket Section, Room 2930B, Waterside Mall, 401 M Street, SW., Washington, D.C. 20460. The docket number is OAQPS-79-12 and will be available to public inspection during normal business hours.

This advance notice of proposed rulemaking is issued under the authority of sections 110, 114, and 301 of the Clean Air Act.

Dated: August 1, 1979.

**Douglas M. Costle,**

*Administrator.*

[FR Doc. 79-24480 Filed 8-7-79; 8:45 am]

BILLING CODE 6560-01-M

**Proposed Approval of an Administrative Order Issued by the South Carolina Department of Health and Environmental Control to the U.S. Department of Energy, Savannah River Operations Office**

**AGENCY:** Environmental Protection Agency.

**ACTION:** Proposed rule.

**SUMMARY:** EPA proposes to approve an administrative order issued by the South Carolina Department of Health and Environmental Control (DHEC) to the Savannah River Operations Office (SROO). The Order requires SROO to bring air emissions from its thirteen coal-fired stoker boilers in Aiken, South Carolina into compliance with air pollution control regulations contained in the federally approved South Carolina State Implementation Plan (SIP) by no later than June 30, 1979. Because the order has been issued to a major source of air pollution and permits a delay in compliance with provisions of the SIP, the Administrative Order must be approved by EPA before it becomes effective as a delayed compliance order under the Clean Air Act (the Act). If approved by EPA, the order will constitute an addition to the SIP. In addition, a source in compliance with an approved order may not be sued under the federal enforcement or citizen suit provisions of the Act for violations of the SIP regulations covered by the order. The purpose of this notice is to invite public comment on EPA's proposed approval of the order as a delayed compliance order.

**DATE:** Written comments must be received on or before October 22, 1979.

**ADDRESSES:** Comments should be submitted to Director, Enforcement Division, EPA, Region IV, 345 Courtland Street, N.E., Atlanta, Georgia 30308. The State order, supporting material, and public comments received in response to this notice may be inspected and copied (for appropriate charges) at this address during normal business hours.

**FOR FURTHER INFORMATION CONTACT:** William Voshell, Air Enforcement Branch, U.S. Environmental Protection Agency, Region IV, 345 Courtland Street NE., Atlanta, Georgia 30308, Telephone Number: (404) 881-4298/4253.

**SUPPLEMENTARY INFORMATION:** SROO, located at Aiken, South Carolina, operates 13 coal-fired boilers at its facility in Aiken and Barnwell County. On November 30, 1977, EPA issued a Notice of Violation to SROO for violation of South Carolina Regulation R61-62.6 Standard No. 2, Section I (now R61-62.5, Standard No. 1, Section II) and R61-62.6, Standard No. 1, Section I (now R61-62.5, Standard No. 1, Section I), dealing with the control of particulate emissions and visible emissions, respectively. Ongoing negotiations have continued since 1972. SROO has acknowledged that 13 of the coal-fired boilers are, or have been, in violation of the respective South Carolina regulation dealing with particulate and/or visible emissions. SROO further states that its inability to meet said standards is due in part to its adherence to the federal budget process, the critical production requirements of the plant, and the need to perform tests to determine the efficiency of the proposed corrective equipment. For past violation of the aforementioned provisions of law, SROO agrees to pay to the South Carolina Department of Health and Environmental Control the sum of one hundred three thousand nine hundred fifty dollars ($103,950.00) in consideration whereof the Department agrees to waive all claims to any penalties provided by law which have or may accrue prior to the expected final compliance date of July 1, 1979. Final compliance is to be achieved on or before July 1, 1979.

The Order under consideration addresses particulate and visible emissions from the 13 coal-fired boilers at Aiken, South Carolina causing pollution which are subject to South Carolina Regulations R61-62.5, Standard No. 1, Section II, dealing with the control of particulate emissions from fuel burning sources, and R61-62.5, Standard No. 1, Section I, dealing with the control of visible emissions, respectively. These regulations limit the emissions of particulate and visible emissions and are part of the federally approved South Carolina State Implementation Plan. The order requires final compliance with the regulation by June 30, 1979, through the implementation of the following schedule for the construction or installation of control equipment. SROO agrees to abide by the following compliance schedule as it relates to each respective area designated herein.

a. Regarding Area 100-C, Unit #1, SROO shall complete the following acts on or before the dates specified:

(1) February 1, 1979—Submit to the Chief, Bureau of Air Quality Control, South Carolina, Department of Health and Environmental Control (hereinafter "Chief"), acceptable performance tests certifying compliance with Regulation 62.5, Standard No. 1, Section I and Section II.

b. Regarding Area 100-C, Unit #2, SROO shall complete the following acts on or before the dates specified:

(1) April 27, 1979—Complete on-site construction and installation of emission control equipment and initiate use of such equipment.

(2) June 1, 1979—Commence performance tests and achieve compliance with the State of South Carolina Air Pollution Control Regulations and Standards, Regulation 62.5, Standard No. 1, Section I and Section II.

(3) June 30, 1979—Submit to the Chief acceptable performance tests certifying compliance with Regulation 62.5, Standard No. 1, Section I and Section II.

c. Regarding Area 200-F, Unit #1, SROO shall complete the following acts on or before the dates specified:

(1) March 1, 1979—Submit to the Chief acceptable performance tests certifying compliance with Regulation 62.5, Standard No.1, Section I and Section II.

d. Regarding Area 200-F, Unit #2, SROO shall complete the following acts on or before the dates specified:

(1) February 1, 1979—Submit to the Chief acceptable performance tests certifying compliance with Regulation 62.5, Standard No.1, Section I and Section II.

e. Regarding Area 200-F, Unit #3, SROO shall complete the following acts on or before the dates specified:

(1) February 1, 1979—Submit to the Chief acceptable performance tests certifying compliance with Regulation 62.5, Standard No.1, Section I and Section II.

f. Regarding Area 200-F, Unit #4, SROO shall complete the following acts on or before the dates specified:

(1) June 1, 1979—Commence performance tests and achieve compliance with the State of South Carolina Air Pollution Control Regulations and Standards, Regulation 62.5, Standard No.1, Section I and Section II.

(2) June 30, 1979—Submit to the Chief acceptable performance tests certifying compliance with Regulation 62.5, Standard No.1, Section I and Section II.

g. Regarding Area 200-H, Unit #1, SROO shall complete the following acts on or before the dates specified:

(1) February 1, 1979—Commence performance tests and achieve compliance with the State of South Carolina Air Pollution Control Regulations and Standards, Regulation 62.5, Standard No. 1, Section I and Section II.

(2) March 1, 1979—Submit to the Chief acceptable performance tests certifying compliance with Regulation 62.5, Standard No. 1, Section I and Section II.

h. Regarding Area 200–H, Unit #2, SROO shall complete the following acts on or before the dates specified:

(1) February 1, 1979—Submit to the Chief acceptable performance tests certifying compliance with Regulation 62.5, Standard No. 1, Section I and Section II.

i. Regarding Area 200–H, Unit #3, SROO shall complete the following acts on or before the dates specified:

(1) February 26, 1979—Initiate on-site construction or installation of emission control equipment.

(2) April 30, 1979—Complete on-site construction and installation of emission control equipment and initiate use of such equipment

(3) June 1, 1979—Commence performance tests and achieve compliance with the State of South Carolina Air Pollution Control Regulations and Standards, Regulation 62.5, Standard No. 1, Section I and Section II.

(4) June 30, 1979—Submit to the Chief acceptable performance tests certifying compliance with Regulation 62.5, Standard No. 1, Section I and Section II.

j. Regarding Area 100–K, Unit #1, SROO shall complete the following acts on or before the dates specified:

(1) June 1, 1979—Commence performance tests and achieve compliance compliance with the State of South Carolina Air Pollution Control Regulations and Standards, Regulation 62.5, Standard No. 1, Section I and Section II.

(2) June 30, 1979—Submit to the Chief acceptable performance tests certifying compliance with Regulation 62.5, Standard No. 1, Section I and Section II.

k. Regarding Area 100–K, Unit #2, SROO will complete the following acts on or before the dates specified:

(1) February 1, 1979—Submit to the Chief acceptable performance tests certifying compliance with Regulation 62.5, Standard No. 1, Section I and Section II.

l. Regarding Area 100–P Unit #1, SROO shall complete the following acts on or before the dates specified:

(1) February 1, 1979—Submit to the Chief acceptable performance tests certifying compliance with Regulation 62.5, Standard No. 1, Section I and Section II.

m. Regarding Area 100–P, Unit #2, SROO shall complete the following acts on or before the dates specified:

(1) February 1, 1979—Commence performance tests and achieve compliance with the State of South Carolina Air Pollution Control Regulations and Standards, Regulation 62.5, Standard No. 1, Section I and Section II.

(2) March 1, 1979—Submit to the Chief acceptable performance tests certifying compliance with Regulation 62.5, Standard No. 1, Section I and Section II.

The source has consented to the terms of the order and has agreed to meet the Order's increments during the period of this informal rulemaking. The source is required to submit quarterly reports by the 15th day of the following quarter indicating progress toward each milestone in the schedule of compliance. If any delay is anticipated in meeting said milestones, the SROO shall immediately notify the DHEC in writing of the anticipated delay and reasons therefor. Notification of the delay shall not excuse the delay. In addition, SROO shall submit, no later than 30 days after the deadline for completing each milestone required by the above schedule certification, to the DHEC whether or not such milestone has been met.

As an interim control measure, the SROO will continue the program directed at minimizing adverse impact on ambient air quality. The interim control program includes the following elements:

(a) The continued implementation of measures that result in the maximum practicable reduction of particulate matter emissions (including such alternatives as load shifting, load reduction, use of lower ash coal, and the continuing program of control equipment maintenance);

(b) The continued implementation of a fuel supply quality assurance program directed at reducing fuel variability and optimizing fuel quality will be initiated;

(c) The continued operation of existing, continuous opacity monitoring equipment; and

(d) The development of an appropriate system of reporting all elements of the program developed pursuant to the requirements stated hereinabove.

Because this Order has been issued to a major source of particulate emissions and permits a delay in compliance with the applicable state air pollution control regulations, it must be approved by EPA before it becomes effective as a delayed compliance order under Section 113(d) of the Clean Air Act (the Act). EPA may approve the order only if it satisfies the appropriate requirements of this subsection. EPA has tentatively determined that the above-referenced order satisfies these legal requirements.

If the submitted administrative Order is approved by EPA, source compliance with its terms would preclude federal-enforcement action under Section 113 of the Act against the source for violations of the regulation[s] covered by the Order during the period the Order is in effect. Enforcement against the source under the citizen suit provision of the Act (Section 304) would be similarly precluded. If approved, the Order would also constitute an addition to the South Carolina SIP. Compliance with the proposed Order will not exempt the company from the requirements contained in any subsequent revision to the SIP which are approved by EPA.

All interested persons are invited to submit written comments on the proposed Order. Written comments received by the date specified above will be considered in determining whether EPA may approve the Order. After the public comment period, the Administrator of EPA will publish in the **Federal Register** the Agency's final action on the Order in 40 CFR Part 65.

(42 U.S.C. 7413, 7601)

Dated: September 13, 1979.

John C. White,

*Regional Administrator, Region IV.*

[FR Doc. 79-29286 Filed 9-19-79; 8:45 am]

BILLING CODE 6560-01-M

**Montana Power Co., Colstrip Units No. 3 and No. 4; Approval of PSD Permit**

Notice is hereby given that on September 11, 1979, the U.S. Environmental Protection Agency issued a Prevention of Significant Deterioration (PSD) permit to the Montana Power Company, Butte, Montana, to construct Colstrip Units #3 and #4, two 778 megawatt (gross) coal fired steam electric generating plants at Colstrip, Montana. This permit has been issued under EPA's Prevention of Significant Deterioration Regulations (40 CFR, Part 52.21) subject to certain conditions, as summarized below:

1. $SO_2$ emissions from either unit shall not exceed 761 pounds per hour (running 30-day average) or 0.18 pounds per million BTU heat input as averaged over any calendar day, to be exceeded no more than once during any calendar month. Compliance with these limits will be based solely on continuous emission monitor (CEM) data.

2. Particulate matter emissions from either unit shall not exceed 0.05 pounds per million BTU heat input as averaged over three hours (minimum) of reference method testing; and 20 percent opacity. Compliance will be based on Reference Method 5; and Reference Method 9 and CEM data, respectively.

3. Nox emissions from either unit shall not exceed 0.70 pounds per million BTU heat input, as averaged over any calendar day. Compliance to be based solely on CEM data.

4. A CEM system for measuring opacity, optical density, sulfur dioxide, nitrogen oxides, and diluent shall be installed, calibrated, maintained and operated by the Company.

5. The Company shall submit to EPA all future information and final plans for the $SO_2$ and particulate control system. If EPA determines that the emission limits will not be met, the permit shall be denied *ab initio*.

6. The Company shall establish an air quality and meteorology monitoring network.

The following conditions were added as a result of proceedings conducted pursuant to Section 164(e) of the Clean Air Act. Should the Northern Cheyenne Reservation be redesignated to any PSD classification less stringent than Class I Conditions 7, 8 and 9 shall be of no force and effect. However, and controls designed and implemented pursuant to Conditons 7 and 8 prior to such redesignation shall remain operable.

7. Colstrip Units #3 and #4 will be subject to the best available retrofit technology (BART) requirements for nitrogen oxides at such time as EPA promulgates these requirements for power plants.

8. If there is a perceptible plume (as will be specified in EPA visibility regulations) on the Northern Cheyenne Indian Reservation, as observed by an impartial observer designated by EPA, Units #3 and #4 will be subject to the BART requirements for particulate matter.

9. The Company and Northern Cheyenne Tribe shall work together to define a baseline and operational visibility monitoring program. This program is to be funded by the Company.

This notice contains only a summary of the permit conditions and interested parties are advised to review the full permit. This PSD permit is reviewable under Section 307(b)(1) of the Clean Air Act only in the Ninth Circuit Court of Appeals. A petition for review must be filed on or before November 26, 1979.

Copies of the permit are available for public inspection upon request at the following locations:

Environmental Protection Agency, Region VIII, Air Programs Branch, Room 204 1860 Lincoln Street Denver, CO 80295 (303) 837-3763

Montana Air Quality Bureau, Department of Health & Environmental Sciences, Cogswell Building, Helena, Montana 59601 (406) 449-3454

Rosebud County Clerk's Office, Rosebud County Courthouse, Forsyth, Montana 59327 (406) 356-7318.

Dated: September 21, 1979

**Roger L. Williams,**

*Regional Administrator.*

[FR Doc. 79-30062 Filed 9-26-79; 8 45 am]

BILLING CODE 6560-01-M

federal register

Wednesday
October 10, 1979

Part II

# Environmental Protection Agency

## Standards of Performance for New Stationary Sources; Continuous Monitoring Performance Specifications

**ENVIRONMENTAL PROTECTION AGENCY**

**40 CFR Part 60**

**[FRL 1276-4]**

## Standards of Performance for New Stationary Sources; Continuous Monitoring Performance Specifications

**AGENCY:** Environmental Protection Agency (EPA).

**ACTION:** Proposed Revisions.

**SUMMARY:** On October 6, 1975 (40 FR 46250), the EPA promulgated revisions to 40 CFR Part 60, Standards of Performance for New Stationary Sources, to establish specific requirements pertaining to continuous emission monitoring. An appendix to the regulation contained Performance Specifications 1 through 3, which detailed the continuous monitoring instrument performance and equipment specifications, installation requirements, and test and data computation procedures for evaluating the acceptability of continuous monitoring systems. Since the promulgation of these performance specifications, the need for a number of changes which would clarify the specification test procedures, equipment specifications, and monitoring system installation requirements has become apparent. The purpose of the revisions is to incorporate these changes into Performance Specifications 1 through 3.

The proposed revisions would apply to all monitoring systems currently subject to performance specifications 1, 2, or 3, including sources subject to Appendix P to 40 CFR Part 51.

**DATES:** Comments must be received on or before December 10, 1979.

**ADDRESSES:** *Comments.* Comments should be submitted (in duplicate if possible) to the Central Docket Section (A-130), Attn: Docket No. OAQPS-79-4, U.S. Environmental Protection Agency, 401 M Street, S.W., Washington, D.C. 20460.

*Docket.* Docket No. OAQPS-79-4, containing material relevant to this rulemaking, is located in the U.S. Environmental Protection Agency, Central Docket Section, Room 2903B, 401 M Street, S.W., Washington, D.C. The docket may be inspected between 8 A.M. and 4 P.M. on weekdays, and a reasonable fee may be charged for copying.

**FOR FURTHER INFORMATION CONTACT:** Don R. Goodwin, Director, Emission Standards and Engineering Division (MD-13), Environmental Protection Agency, Research Triangle Park, North Carolina 27711, telephone number (919) 541-5271.

**SUPPLEMENTARY INFORMATION:** Changes common to all three of the performance specifications are the clarification of the procedures and equipment specifications, especially the requirement for intalling the continuous monitoring sample interface and of the calculation procedure for relative accuracy. Specific changes to the specifications are as follows:

### Performance Specification

1. The optical design specification for mean and peak spectral responses and for the angle of view and projection have been changed from "500 to 600 nm" range to "515 to 585 nm" range and from "5°" to "3°", respectively.

2. The following equipment specifications have been added:

a. Optical alignment sight indicator for readily checking alignment.

b. For instruments having automatic compensation for dirt accumulation on exposed optical surfaces, a compensation indicator at the control panel so that the permissible maximum 4 percent compensation can be determined.

c. Easy access to exposed optical surfaces for cleaning and maintenance.

d. A system for checking zero and upscale calibration (previously required in paragraph 60.13).

e. For systems with slotted tubes, a slotted portion greater than 90 percent of effluent pathlength (shorter slots are permitted if shown to be equivalent).

f. An equipment specification for the monitoring system data recorder resolution of <5 percent of full scale.

3. A procedure for determining the acceptability of the optical alignment sight has been specified; the optical alignment sight must be capable of indicating that the instrument is misaligned when an error of ±2 percent opacity is caused by misalignment of the instrument at a pathlength of 8 meters.

4. Procedures for calibrating the attenuators used during instrument calibrations have been added; these procedures require the use of a laboratory spectrophotometer operating in the 400-700 nm range with a detector angle view of <10 degrees and an accuracy of 1 percent.

5. The following changes have been made to the procedures for the operational test period:

a. The requirement for an analog strip chart recorder during the performance tests has been deleted; all data are collected on the monitoring system data recorder.

b. Adjustment of the zero and span at 24-hour intervals during the drift tests is optional; adjustments are required only when the accumulated drift exceeds the 24-hour drift specification.

c. The amount of automatic zero compensation for dirt accumulation must be determined during the 24-hour zero check so that the actual zero drift can be quantified. The automatic zero compensation system must be operated during the performance test.

d. The requirement for offsetting the data recorder zero during the operational test period has been deleted.

e. Off the stack "zero alignment" of the instrument prior to installation is permitted.

### Performance Specification 2

1. "Continuous monitoring system" has been redefined to include the diluent monitor, if applicable. The change requires that the relative accuracy of the system be determined in terms of the emission standard, e.g., mass per unit calorific value for fossil-fuel fired steam generators.

2. The applicability of the test procedures excludes single-pass, in-situ continuous monitoring systems. The procedures for determining the acceptability of these systems are evaluated on a case-by-case basis.

3. For extractive systems with diluent monitors, the pollutant and diluent monitors are required to use the same sample interface.

4. The procedure for determining the acceptability of the calibration gases has been revised, and the 20 percent (with 95 percent confidence interval) criterion has been changed to 5 percent of mean value with no single value being over 10 percent from the mean.

5. For low concentrations, a 10 percent of the applicable standard limitation for the relative accuracy has been added.

6. An equipment specification for the system data recorder requiring that the chart scale be readable to within <0.50 percent of full-scale has been added.

7. Instead of spanning the instrument at 90 percent of full-scale, a mid-level span is required.

8. The response time test procedure has been revised and the difference limitation between the up-scale and down-scale time has been deleted.

9. The relative accuracy test procedure has been revised to allow different tests (e.g., pollutant, diluent, moisture) during a 1-hour period to be correlated.

10. A low-level drift may be substituted for the zero drift test.

**Performance Specification 3**

1. The applicability of the test procedures has been limited to those monitors that introduce calibration gases directly into the analyzer and are used as diluent monitors. Alternative procedures for other types of monitors are evaluated on a case-by-case basis.

2. Other changes were made to be consistent with the revisions under Performance Specification 2

The proposed revised performance specifications would apply to all sources subject to Performance Specifications 1, 2, or 3. These include sources subject to standards of performance that have already been promulgated and sources subject to Appendix P to 40 CFR Part 51. Since the purpose of these revisions is to clarify the performance specifications which were promulgated on October 6, 1975, not to establish more stringent requirements, it is reasonable to conclude that most continuous monitoring instruments which met and can continue to meet the October 6, 1975, specifications can also meet the revised specifications.

Under Executive Order 12044, the Environmental Protection Agency is required to judge whether a regulation is "significant" and therefore subject to the procedural requirements of the Order or whether it may follow other specialized development procedures. EPA labels these other regulations "specialized". I have reviewed this regulation and determined that it is a specialized regulation not subject to the procedural requirements of Executive Order 12044.

Dated: October 1, 1979.

**Douglas M. Costle,**

*Administrator.*

It is proposed to revise Appendix B, Part 60 of Chapter I, Title 40 of the Code of Federal Regulations as follows:

**Appendix B—Performance Specifications**

*Performance Specification 1—Specifications and Test Procedures For Opacity Continuous Monitoring Systems in Stationary Sources*

1. Applicability and Principle

1.1 Applicability. This Specification contains instrument design, performance, and installation requirements, and test and data computation procedures for evaluating the acceptability of continuous monitoring systems for opacity. Certain design requirements and test procedures established in the Specification may not be applicable to all instrument designs; equivalent systems and test procedures may be used with prior approval by the Administrator.

1.2 Principle. The opacity of particulate matter in stack emissions is continuously monitored by a measurement system based upon the principle of transmissometry. Light having specific spectral characteristics is projected from a lamp through the effluent in the stack or duct and the intensity of the projected light is measured by a sensor. The projected light is attenuated due to absorption and scatter by the particulate matter in the effluent; the percentage of visible light attenuated is defined as the opacity of the emission. Transparent stack emissions that do not attenuate light will have a transmittance of 100 percent or an opacity of zero percent. Opaque stack emissions that attenuate all of the visible light will have a transmittance of zero percent or an opacity of 100 percent.

This specification establishes specific design criteria for the transmissometer system. Any opacity continuous monitoring system that is expected to meet this specification is first checked to verify that the design specifications are met. Then, the opacity continuous monitoring system is calibrated, installed, an operated for a specified length of time. During this specified time period, the system is evaluated to determine conformance with the established performance specifications.

2. Definitions

2.1 Continuous Monitoring System. The total equipment required for the determination of opacity. The system consists of the following major subsystems:

2.1.1 Sample Interface. That portion of the system that protects the analyzer from the effects of the stack effluent and aids in keeping the optical surfaces clean.

2.1.2 Analyzer. That portion of the system that senses the pollutant and generates a signal output that is a function of the opacity.

2.1.3 Data Recorder. That portion of the system that processes the analyzer output and provides a permanent record of the output signal in terms of opacity. The data recorder may include automatic data reduction capabilities.

2.2 Transmissometer. That portion of the system that includes the sample interface and the analyzer.

2.3 Transmittance. The fraction of incident light that is transmitted through an optical medium.

2.4 Opacity. The fraction of incident light that is attenuated by an optical medium. Opacity (Op) and transmittance (Tr) are related by: $Op = 1 - Tr$.

2.5 Optical Density. A logarithmic measure of the amount of incident light attenuated. Optical density (D) is related to the transmittance and opacity as follows:

$$D = -\log_{10} Tr = -\log_{10} (1 - Op).$$

2.6 Peak Spectral Response. The wavelength of maximum sensitivity of the transmissometer.

2.7 Mean Spectral Response. The wavelength which bisects the total area under the effective spectral response curve of the transmissometer.

2.8 Angle of View. The angle that contains all of the radiation detected by the photodetector assembly of the analyzer at a level greater than 2.5 percent of the peak detector response.

2.9 Angle of Projection. The angle that contains all of the radiation projected from the lamp assembly of the analyzer at a level of greater than 2.5 percent of the peak illuminace.

2.10 Span Value. The opacity value at which the continuous monitoring system is set to produce the maximum data display output as specified in the applicable subpart.

2.11 Upscale Calibration Value. The opacity value at which a calibration check of the monitoring system is performed by simulating an upscale opacity condition as viewed by the receiver.

2.12 Calibration Error. The difference between the opacity values indicated by the continuous monitoring system and the known values of a series of calibration attenuators (filters or screens).

2.13 Zero Drift. The difference in continuous monitoring system output readings before and after a stated period of normal continuous operation during which no unscheduled maintenance, repair, or adjustment took place and when the opacity (simulated) at the time of the measurements was zero.

2.14 Calibration Drift. The difference in the continuous monitoring system output readings before and after a stated period of normal continuous operation during which no unscheduled maintenance, repair, or adjustment took place and when the opacity (simulated) at the time of the measurements was the same known upscale calibration value.

2.15 Response Time. The amount of time it takes the continuous monitoring system to display on the data recorder 95 percent of a step change in opacity.

2.16 Conditioning Period. A period of time (168 hours minimum) during which the continuous monitoring system is operated without unscheduled maintenance, repair, or adjustment prior to initiation of the operational test period.

2.17 Operational Test Period. A period of time (168 hours) during which the continuous monitoring system is expected to operate within the established performance specifications without any unscheduled maintenance, repair, or adjustment.

2.18 Pathlength. The depth of effluent in the light beam between the receiver and the transmitter of a single-pass transmissometer, or the depth of effluent between the transceiver and reflector of a double-pass transmissometer. Two pathlengths are referenced by this Specification as follows:

2.18.1 Monitor Pathlength. The pathlength at the installed location of the continuous monitoring system.

2.18.2 Emission Outlet Pathlength. The pathlength at the location where emissions are released to the atmosphere.

3. Apparatus

3.1 Continuous Monitoring System. Use any continuous monitoring system for opacity which is expected to meet the design specifications in Section 5 and the performance specifications in Section 7. The data recorder may be an analog strip chart recorder type or other suitable device with an input signal range compatible with the analyzer output.

3.2 Calibration Attenuators. Use optical filters with neutral spectral characteristics or screens known to produce specified optical densities to visible light. The attenuators must be of sufficient size to attenuate the entire light beam of the transmissometer. Select and calibrate a minimum of three attenuators according to the procedures in Sections 8.1.2. and 8.1.3.

3.3 Upscale Calibration Value Attenuator. Use an optical filter with neutral spectral characteristics, a screen, or other device that produces an opacity value (corrected for pathlength, if necessary) that is greater than the sum of the applicable opacity standard and one-fourth of the difference between the opacity standard and the instrument span value, but less than the sum of the opacity standard and one-half of the difference between the opacity standard and the instrument span value.

3.4 Calibration Spectrophotometer. To calibrate the calibration attenuators use a laboratory spectrophotometer meeting the following minimum design specification:

| Parameter | Specification |
|---|---|
| Wavelength range | 400-700 nm |
| Detector angle of view | ≤ 10° |
| Accuracy | ≤ 0.5 pct. transmittance |

4. Installation Specifications

Install the continuous monitoring system where the opacity measurements are representative of the total emissions from the affected facility. Use a measurement path that represents the average opacity over the cross section. Those requirements can be met as follows:

4.1 Measurement Location. Select a measurement location that is (a) downstream from all particulate control equipment; (b) where condensed water vapor is not present; (c) accessible in order to permit routine maintenance; and (d) free of interference from ambient light (applicable only if transmissometer is responsive to ambient light).

4.2 Measurement Path. Select a measurement path that passes through the centroid of the cross section. Additional requirements or modifications must be met for certain locations as follows:

4.2.1 If the location is in a straight vertical section of stack or duct and is less than 4 equivalent diameters downstream or 1 equivalent diameter upstream from a bend, use a path that is in the plane defined by the bend.

4.2.2 If the location is in a vertical section of stack or duct and is less than 4 diameters downstream and 1 diameter upstream from a bend, use a path in the plane defined by the bend upstream of the transmissometer.

4.2.3 If the location is in a horizontal section of duct and is at least 4 diameters downstream from a vertical bend, use a path in the horizontal plane that is one-third the distance up the vertical axis from the bottom of the duct.

4.2.4 If the location is in a horizontal section of duct and is less than 4 diameters downstream from a vertical bend, use a path in the horizontal plane that is two-thirds the distance up the vertical axis from the bottom of the duct for upward flow in the vertical section, and one-third the distance up the vertical axis from the bottom of the duct for downward flow.

4.3 Alternate Locations and Measurement Paths. Other locations and measurement paths may be selected by demonstrating to the Administrator that the average opacity measured at the alternate location or path is equivalent (± 10 percent) to the opacity as measured at a location meeting the criteria of Sections 4.1 and 4.2. To conduct this demonstration, measure the opacities at the two locations or paths for a minimum period of two hours. The opacities of the two locations or paths may be measured at different times, but must be measured at the same process operating conditions.

5. Design Specifications

Continuous monitoring systems for opacity must comply with the following design specifications:

5.1 Optics.

5.1.1 Spectral Response. The peak and mean spectral responses will occur between 515 nm and 585 nm. The response at any wavelength below 400 nm or above 700 nm will be less than 10 percent of the peak spectral response.

5.1.2 Angle of View. The total angle of view will be no greater than 4 degrees.

5.1.3 Angle of Projection. The total angle of projection will be no greater than 4 degrees.

5.2 Optical Alignment sight. Each analyzer will provide some method for visually determining that the instrument is optically aligned. The system provided will be capable of indicating that the unit is misaligned when an error of ± 2 percent opacity occurs due to misalignment at a monitor pathlength of eight (8) meters.

5.3 Simulated Zero and Upscale Calibration System. Each analyzer will include a system for simulating a zero opacity and an upscale opacity value for the purpose of performing periodic checks of the transmissometer calibration while on an operating stack or duct. This calibration system will provide, as a minimum, a system check of the analyzer internal optics and all electronic circuitry including the lamp and photodetector assembly.

5.4 Access to External Optics. Each analyzer will provide a means of access to the optical surfaces exposed to the effluent stream in order to permit the surfaces to be cleaned without requiring removal of the unit from the source mounting or without requiring optical realignment of the unit.

5.5 Automatic Zero Compensation Indicator. If the monitoring system has a feature which provides automatic zero compensation for dirt accumulation on exposed optical surfaces, the system will also provide some means of indicating that a compensation of 4 ± 0.5 percent opacity has been exceeded; this indicator shall be at a location accessible to the operator (e.g., the data output terminal). During the operational test period, the system must provide some means for determining the actual amount of zero compensation at the specified 24-hour intervals so that the actual 24-hour zero drift can be determined (see Section 8.4.1).

5.6 Slotted Tube. For transmissometers that use slotted tubes, the length of the slotted portion(s) must

be equal to or greater than 90 percent of the monitor pathlength, and the slotted tube must be of sufficient size and orientation so as not to interfere with the free flow of effluent through the entire optical volume of the transmissometer photodetector. The manufacturer must also show that the transmissometer uses appropriate methods to minimize light reflections; as a minimum, this demonstration shall consist of laboratory operation of the transmissometer both with and without the slotted tube in position. Should the operator desire to use a slotted tube design with a slotted portion equal to less than 90 percent of the monitor pathlength, the operator must demonstrate to the Administrator that acceptable results can be obtained. As a minimum demonstration, the effluent opacity shall be measured using both the slotted tube instrument and another instrument meeting the requirement of this specification but not of the slotted tube design. The measurements must be made at the same location and at the same process operating conditions for a minimum period of two hours with each instrument. The shorter slotted tube may be used if the average opacity measured is equivalent (± 10 percent) to the opacity measured by the non-slotted tube design.

6. Optical Design Specifications Verifciation Procedure.

These procedures will not be applicable to all designs and will require modification in some cases; all modifications are subject to the approval of the Administrator.

Test each analyzer for conformance with the design specifications of Sections 5.1 and 5.2 or obtain a certificate of conformance from the analyzer manufacturer as follows:

6.1 Spectral Response. Obtain detector response, lamp emissivity and filter transmittance data for the components used in the measurement system from their respective manufacturers.

6.2 Angle of View. Set up the receiver as specified by the manufacturer's written instructions. Draw an arc with radius of 3 meters in the horizontal direction. Using a small (less than 3 centimeters) non-directional light source, measure the receiver response at 4-centimeter intervals on the arc for 24 centimeters on either side of the detector centerline. Repeat the test in the vertical direction.

6.3 Angle of Projection. Set up the projector as specified by the manufacturer's written instructions. Draw an arc with radius of 3 meters in the horizontal direction. Using a small (less than 3 centimeters) photoelectric light detector, measure the light intensity at 4-centimeter intervals on the arc for 24 centimeters on either side of the light source centerline of projection. Repeat the test in the vertical direction.

6.4 Optical Alignment Sight. In the laboratory set up the instrument as specified by the manufacturers written instructions for a monitor pathlength of 8 meters. Assure that the instrument has been properly aligned and that a proper zero and span have been obtained. Insert an attenuator of 10 percent (nominal) opacity into the instrument pathlength. Slowly misalign the projector unit until a positive or negative shift of two percent opacity is obtained by the data recorder. Then, following the manufacturer's written instructions, check the alignment and assure that the alignment procedure does in fact indicate that the instrument is misaligned. Realign the instrument and follow the same procedure for checking misalignment of the receiver or retroreflector unit.

6.5 Manufacturer's Certificate of Conformance (Alternative to above). Obtain from the manufacturer a certificate of conformance which certifies that the first analyzer randomly sampled from each month's production was tested according to Sections 6.1 through 6.3 and satisfactorily met all requirements of Section 5 of this Specification. If any of the requirements were not met, the certificate must state that the entire month's analyzer production was resampled according to the military standard 105D sampling procedure (MIL-STD-105D) inspection level II; was retested for each of the applicable requirements under Section 5 of this Specification; and was determined to be acceptable under MIL-STD-105D procedures, acceptable quality level 1.0. The certificate of conformance must include the results of each test performed for the analyzer(s) sampled during the month the analyzer being installed was produced.

7. Performance Specifications

The opacity continuous monitoring system performance specifications are listed in Table 1-1.

**Table 1-1.**—*Performance specifications*

| Parameter | Specifications |
|---|---|
| 1 Calibration error [a] | ≤ 3 pct opacity. |
| 2 Response time | ≤ 10 seconds. |
| 3 Conditioning period [b] | ≥ 168 hours. |
| 4 Operational test period [b] | ≥ 168 hours. |
| 5. Zero drift (24-hour) [a] | ≤ 2 pct opacity |
| 6 Calibration drift (24-hour) [a] | ≤ 2 pct opacity |
| 7 Data recorder resolution | ≤ 0 50 pct of full scale span value |

[a] Expressed as sum of absolute mean and the 95 percent confidence interval.

[b] During the conditioning and operational test periods the continuous monitoring system shall not require any corrective maintenance, repair, replacement, or adjustment other than that clearly specified as routine and required in the operation and maintenance manuals.

8. Performance Specification Verification Procedure

Test each continuous monitoring system that conforms to the design specifications (Section 5) using the following procedures to determine conformance with the performance specifications of Section 7.

8.1 Preliminary Adjustments and Tests. Prior to installation of the system on the stack, perform these steps or tests at the affected facility or in the manufacturer's laboratory.

8.1.1 Equipment Preparation. Set up and calibrate the monitoring system for the monitor pathlength to be used in the installation as specified by the manufacturer's written instructions. If the monitoring system has automatic pathlength adjustment, follow the manufacturer's instructions to adjust the signal output from the analyzer to equivalent values based on the emission outlet pathlength. Set the span at the value specified in the applicable subpart. At this time perform the zero alignment by balancing the response of the continuous monitoring system so that the simulated zero check coincides with the actual zero check performed across the simulated monitor pathlength. Then, assure that the upscale calibration value is within the required opacity range (Section 3.3).

8.1.2 Calibrated Attenuator Selection. Based on the span value specified in the applicable subpart, select a minimum of three calibrated attenuators (low, mid, and high range) using Table 1-2. If the system is operating with automatic pathlength compensation, calculates the attenuator values required to obtain a system response equivalent to the applicable values shown in Table 1-2; use equation 1-1 for the conversion. A series of filters with nominal optical density (opacity) values of 0.1(20), 0.2(37), 0.3(50), 0.4(60), 0.5(68), 0.6(75), 0.7(80), 0.8(84), 0.9(88), and 1.0(90) are commercially available. Within this limitation of filter availability, select the calibrated

attenuators having the values given in Table 1-2 or having values closest to those calculated by Equation 1-1.

Table 1-2.—*Required Calibrated Attenuator Values (Nominal)*

| Span value (percent opacity) | Calibrated attenuator optical density (equivalent opacity in parenthesis) | | |
|---|---|---|---|
| | Low-range $D_1$ | Mid-range | High-range |
| 50 | 0.1 (20) | 0.2 (37) | 0.3 (50) |
| 60 | .1 (20) | .2 (37) | .3 (50) |
| 70 | .1 (20) | .3 (50) | .4 (60) |
| 80 | .1 (20) | .3 (50) | .6 (75) |
| 90 | .1 (20) | .4 (60) | .7 (80) |
| 100 | .1 (20) | .4 (60) | .9 (87½) |

$$D_1 = D_2 (L_1/L_2) \qquad \text{Equation 1-1}$$

Where

$D_1$ = Nominal optical density value of required mid, low, or high range calibration attenuators.

$D_2$ = Desired attenuator optical density output value from Table 1-2 at the span required by the applicable subpart.

$L_1$ = Monitor pathlength.

$L_2$ = Emission outlet pathlength.

8.1.3 Attenuator Calibration. Calibrate the required filters or screens using a laboratory spectrophotometer meeting the specifications of Section 3.4 to measure the transmittance in the 400 to 700 nm wavelength range; make measurements at wavelength intervals of 20 nm or less. As an alternate procedure use an instrument meeting the specifications of Section 3.4 to measure the C.I.E. Daylight$_C$ Luminous Transmittance of the attenuators. During the calibration procedure assure that a minimum of 75 percent of the total area of the attenuator is checked. The attenuator manufacturer must specify the period of time over which the attenuator values can be considered stable, as well as any special handling and storing procedures required to enhance attenuator stability. To assure stability, attenuator values must be rechecked at intervals less than or equal to the period of stability guaranteed by the manufacturer. However, values must be rechecked at least every 3 months. If desired, stability checks may be performed on an instrument other than that initially used for the attenuator calibration (Section 3.4). However, if a different instrument is used, the instrument shall be a high quality laboratory transmissometer or spectrophotometer and the same instrument shall always be used for the stability checks. If a secondary instrument is to be used for stability checks, the value of the calibrated attenuator shall be measured on this secondary instrument immediately following calibration and prior to being used. If over a period time an attenuator value changes by more than ±2 percent opacity, it shall be recalibrated or replaced by a new attenuator.

If this procedure is conducted by the filter or screen manufacturer or independent laboratory, obtain a statement certifying the values and that the specified procedure, or equivalent, was used.

8.1.4 Calibration Error Test. Insert the calibrated attenuators (low, mid, and high range) in the transmissometer path at or as near to the midpoint as feasible. The attenuator must be placed in the measurement path at a point where the effluent will be measured; i.e., do not place the calibrated attenuator in the instrument housing. While inserting the attenuator, assure that the entire projected beam will pass through the attenuator and that the attenuator is inserted in a manner which minimizes interference from reflected light. Make a total of five nonconsecutive readings for each filter. Record the monitoring system output readings in percent opacity (see example Figure 1-1).

8.1.5 System Response Test. Insert the high-range calibrated attenuator in the transmissometer path five times and record the time required for the system to respond to 95 percent of final zero and high-range filter values (see example Figure 1-2).

8.2 Preliminary Field Adjustments. Install the continuous monitoring system on the affected facility according to the manufacturer's written instructions and perform the following preliminary adjustments:

8.2.1 Optical and Zero Alignment. When the facility is not in operation, conduct the optical alignment by aligning the light beam from the transmissometer upon the optical surface located across the duct or stack (i.e., the retroflector or photodetector, as applicable) in accordance with the manufacturer's instructions. Under clear stack conditions, verify the zero alignment (performed in Section 8.1.1) by assuring that the monitoring system response for the simulated zero check coincides with the actual zero measured by the transmissometer across the clear stack. Adjust the zero alignment, if necessary. Then, after the affected facility has been started up and the effluent stream reaches normal operating temperature, recheck the optical alignment. If the optical alignment has shifted realign the optics.

8.2.2 Optical and Zero Alignment (Alternative Procedure). If the facility is already on line and a zero stack condition cannot practicably be obtained, use the zero alignment obtained during the preliminary adjustments (Section 8.1.1) prior to installation of the transmissometer on the stack. After completing all the preliminary adjustments and tests required in Section 8.1, install the system at the source and align the optics, i.e., align the light beam from the transmissometer upon the optical surface located across the duct or stack in accordance with the manufacturer's instruction. The zero alignment conducted in this manner shall be verified and adjusted, if necessary, the first time the facility is not in operation after the operational test period has been completed.

8.3 Conditioning Period. After completing the preliminary field adjustments (Section 8.2), operate the system according to the manufacturer's instructions for an initial conditioning period of not less than 168 hours while the source is operating. Except during times of instrument zero and upscale calibration checks, the continuous monitoring system will analyze the effluent gas for opacity and produce a permanent record of the continuous monitoring system output. During this conditioning period there shall be no unscheduled maintenance, repair, or adjustment. Conduct daily zero calibration and upscale calibration checks, and, when accumulated drift exceeds the daily operating limits, make adjustments and/or clean the exposed optical surfaces. The data recorder shall reflect these checks and adjustments. At the end of the operational test period, verify that the instrument optical alignment is correct. If the conditioning period is interrupted because of source breakdown (record the dates and times of process shutdown), continue the 168-hour period following resumption of source operation. If the conditioning period is interrupted because of monitor failure, restart the 168-hour conditioning period when the monitor becomes operational.

8.4 Operational Test Period. After completing the conditioning period operate the system for an additional 168-hour period. It is not necessary that the 168-hour operational test period immediately follow the 168-hour conditioning period. Except during times of instrument zero and upscale calibration checks, the continuous monitoring system will analyze the effluent gas for opacity and will produce a permanent record of the continuous monitoring system output. During this period, there will be no unscheduled maintenance, repair, or adjustment. Zero and calibration adjustments, optical surface cleaning, and optical realignment may be performed (optional) only at 24-hour intervals or at

such shorter intervals as the manufacturer's written instructions specify. Automatic zero and calibration adjustments made by the monitoring system without operator intervention or initiation are followable at any time. If the operational test period is interrupted because of source breakdown, continue the 168-hour period following resumption of source operation. If the test period is interrupted because of monitor failure, restart the 168-hour period when the monitor becomes operational. During the operational test period, perform the following test procedures:

8.4.1 Zero Drift Test. At the outset of the 168-hour operational test period, record the initial simulated zero and upscale opacity readings (see example Figure 1-3). After each 24-hour interval check and record the final zero reading before any optional or required cleaning and adjustment. Zero and upscale calibration adjustments, optical surface cleaning, and optical realignment may be performed only at 24-hour intervals (or at such shorter intervals as the manufacturer's written instructions specify) but are optional. However, adjustments and/or cleaning must be performed when the accumulated zero calibration or upscale calibration drift exceeds the 24-hour drift specifications (±2 percent opacity). If no adjustments are made after the zero check the final zero reading is recorded as the initial reading for the next 24-hour period. If adjustments are made, the zero value after adjustment is recorded as the initial zero value for the next 24-hour period. If the instrument has an automatic zero compensation feature for dirt accumulation on exposed lens, and the zero value cannot be measured before compensation is entered then record the amount of automatic zero compensation for the final zero reading of each 24-hour period. (List the indicated zero values of the monitoring system in parenthesis.)

8.4.2 Upscale Drift Test. At each 24-hour interval, after the zero calibration value has been checked and any optional or required adjustments have been made, check and record the simulated upscale calibration value. If no further adjustments are made to the calibration system at this time, the final upscale calibration value is recorded as the initial upscale value for the next 24-hour period. If an instrument span adjustment is made, the upscale value after adjustment is recorded as the initial upscale for the next 24-hour period.

During the operational test period record all adjustments, realignments and lens cleanings.

9. Calculation, Data Analysis, and Reporting

9.1 Arithmetic Mean. Calculate the mean of a set of data as follows:

$$\bar{x} = \frac{1}{n}\sum_{i=1}^{n} x_i \qquad \text{Equation 2-1}$$

Where:

$\bar{x}$ = mean value.
n = number of data points.
$\Sigma x_i$ = algebraic sum of the individual measurements, $x_i$

9.2 Confidence Interval. Calculate the 95 percent confidence interval (two-sided) as follows:

$$C.I._{95} = \frac{t_{.975}}{n\sqrt{n-1}} \sqrt{n\,(\Sigma x_i^2) - (\Sigma x_i)^2}$$

Equation 2-2

Where:

$C.I._{95}$ = 95 percent confidence interval estimate of the average mean value.
$t_{.975} = t(1-\alpha/2)$.

Table 1-3—$t_{.975}$ Values

| n | $t_{.975}$ | n | $t_{.975}$ | n | $t_{.975}$ |
|---|---|---|---|---|---|
| 2 | 12 706 | 7 | 2 447 | 12 | 2 201 |
| 3 | 4 303 | 8 | 2 385 | 13 | 2 179 |
| 4 | 3 182 | 9 | 2 306 | 14 | 2 160 |
| 5 | 2 776 | 10 | 2 262 | 15 | 2 145 |
| 6 | 2 571 | 11 | 2 228 | 16 | 2 131 |

The values in this table are already corrected for n-1 degrees of Freedom. Use n equal to the number of data points.

9.3 Conversion of Opacity Values from Monitor Pathlength to Emission Outlet Pathlength. When the monitor pathlength is different than the emisson outlet pathlength, use either of the following equations to convert from one basis to the other (this conversion may be automatically calculated by the monitoring system):

$$\log(1-Op_2) = (L_2/L_1)\,\mathrm{Log}\,(1-Op_1) \qquad \text{Equation 1-4}$$

$$D_2 = (L_2/L_1) \qquad \text{Equation 1-5}$$

Where:

$Op_1$ = opacity of the effluent based upon $L_1$
$Op_2$ = opacity of the effluent based upon $L_2$
$L_1$ = monitor pathlength
$L_2$ = emission outlet pathlength
$D_1$ = optical density of the effluent based upon $L_1$
$D_2$ = optical density of the effleunt based upon $L_2$

9.4 Spectral Response. Using the spectral data obtained in Section 6.1, develop the effective spectral response curve of the transmissometer. Then determine and report the peak spectral response wavelength, the mean spectral response wavelength, and the maximum response at any wavelength below 400 nm and above 700 nm expressed as a percentage of the peak response.

9.5 Angle of View. For the horizontal and vertical directions, using the data obtained in Section 6.2, calculate the response of the receiver as a function of viewing angle (21 centimeters of arc with a radius of 3 meters equal 4 degrees), report relative angle of view curves, and determine and report the angle of view.

9.6 Angle of Projection. For the horizontal and vertical directions, using the data obtained in Section 6.3, calculate the response of the photoelectric detector as a function of projection angle, report relative angle of projection curves, and determine and report the angle of projection.

9.7 Calibration Error. See Figure 1-1. If the pathlength is not adjusted by the measurement system, subtract the actual calibrated attenuator value from the value indicated by the measurement system recorder for each of the 15 readings obtained pursuant to Section 8.1.4. If the pathlength is adjusted by the measurement system subtract the "path adjusted" calibrated attenuator values from the values indecated by the measurement system recorder the "path adjusted" calibrated attenuator values are calculated using equation 1-4 or 1-5). Calculate the arithmetic mean difference and the 95 percent confidence interval of the five tests at each attenuator value using Equations 1-2 and 1-3. Calculate the sum of the absolute value of the mean difference and the 95 percent confidence interval for each of the three test attenuators; report these three values as the calibration error.

9.8 Zero and Upscale Calibration Drifts. Using the data obtained in Sections 8.4.1 and 8.4.2 calculate the zero and upscale calibration drifts. Then calculate the arithmetic means and the 95 percent confidence intervals using Equations 1-2 and 1-3. Calculate the sum of the absolute value of the mean and the 95 percent confidence interval and report these values as the 24-hour zero drift and the 24-hour calibration drift.

9.9 Response Time. Using the data collected in Section 8.1.5, calculate the mean time of the 10 upscale and downscale tests and report this value as the system response time.

9.10 Reporting. Report the following (summarize in tabular form where appropriate).

9.10.1 General Information.

a. Instrument Manufacturer.
b. Instrument Model Number.
c. Instrument Serial Number.

d. Person(s) responsible for operational and conditioning test periods and affiliation.

e. Facility being monitored.

f. Schematic of monitoring system measurement path location.

g. Monitor pathlength, meters.

h. Emission outlet pathlength, meters.

i. System span value, percent opacity.

j. Upscale calibration value, percent opacity.

k. Calibrated Attenuator values (low, mid, and high range), percent opacity.

9.10.2 Design Specification Test Results.

a. Peak spectral response, nm.

b. Mean spectral response, nm.

c. Response above 700 nm, percent of peak.

d. Response below 400 nm, percent of peak.

e. Total angle of view, degrees.

f. Total angle of projection, degrees.

9.10.3 Operational Test Period Results.

a. Calibration error, high-range, percent opacity.

b. Calibration error, mid-range, percent opacity.

c. Calibration error, low-range, percent opacity.

d. Response time, seconds.

e. 24-hour zero drift, percent opacity.

f. 24-hour calibration drift, percent opacity.

g. Lens cleaning, clock time.

h. Optical alignment adjustment, clock time.

9.10.4 Statements. Provide a statement that the conditioning and operational test periods were completed according to the requirements of Sections 8.3 and 8.4. In this statement, include the time periods during which the conditioning and operational test periods were conducted.

9.10.5 Appendix. Provide the data tabulations and calculations for the above tabulated results.

9.11 Retest. If the continuous monitoring system operates within the specified performance parameters of Table 1-1, the operational test period will be successfully concluded. If the continuous monitoring system fails to meet any of the specified performance parameters, repeat the operational test period with a system that meets the design specifications and is expected to meet the performance specifications.

10. Bibliography.

10.1 "Experimental Statistics." Department of Commerce, National Bureau of Standards Handbook 91, 1963, pp. 3-31, paragraphs 3-3.1.4.

10.2 "Performance Specifications for Stationary-Source Monitoring Systems for Gases and Visible Emissions." Environmental Protection Agency, Research Triangle Park, N. C., EPA-650/2-74-013, January 1974.

BILLING CODE 6560-01-M

Person Conducting Test _____ Analyzer Manufacturer _____

Affiliation _____ Model/Serial No. _____

Date _____ Location _____

Monitor Pathlength, $L_1$ _____ Emission Outlet Pathlength, $L_2$ _____

Monitoring System Output Pathlength Corrected? Yes ____ No ____

Calibrated Neutral Density Filter Values

Actual Optical Density (Opacity):

Low Range _____ (_____)

Mid Range _____ (_____)

High Range _____ (_____)

Path Adjusted Optical Density (opacity)

Low Range _____ (_____)

Mid Range _____ (_____)

High Range _____ (_____)

| Run Number | Calibration Filter Value (Path Adjusted Percent Opacity) | Instrument Reading (Percent Opacity) | Arithmetic Difference (% Opacity) | | |
|---|---|---|---|---|---|
| | | | Low | Mid | High |
| 1 – Low | | | | – | – |
| 2 – Mid | | | – | | – |
| 3 – High | | | – | – | |
| 4 – Low | | | | – | – |
| 5 – Mid | | | – | | – |
| 6 – High | | | – | – | |
| 7 – Low | | | | – | – |
| 8 – Mid | | | – | | – |
| 9 – High | | | – | – | |
| 10–Low | | | | – | – |
| 11–Mid | | | – | | – |
| 12–High | | | – | – | |
| 13–Low | | | | – | – |
| 14–Mid | | | – | | – |
| 15–High | | | – | – | – |
| | | | | | |
| Arithmetic Mean (Equation 1 – 2): A | | | | | |
| Confidence Interval (Equation 1 – 3): B | | | | | |
| Calibration Error $\lvert A \rvert + \lvert B \rvert$ | | | | | |

Figure 1 – 1. Calibration error determination

Person Conducting Test _____ Analyzer Manufacturer _____

Affiliation _____ Model/Serial No. _____

Date _____ Location _____

High Range Calibration Filter Value: Actual Optical Density (Opacity) _____ (_____)

Path Adjusted Optical Density (Opacity) _____ (_____)

Upscale Response Value ( 0.95 x filter value) _____ percent opacity

Downscale Response Value (0.05 x filter value) _____ percent opacity

| | | |
|---|---|---|
| Upscale | 1 | _____ seconds |
| | 2 | _____ seconds |
| | 3 | _____ seconds |
| | 4 | _____ seconds |
| | 5 | _____ seconds |
| Downscale | 1 | _____ seconds |
| | 2 | _____ seconds |
| | 3 | _____ seconds |
| | 4 | _____ seconds |
| | 5 | _____ seconds |
| | Average response | _____ seconds |

Figure 1-2. Response Time Determination

Person Conducting Test _____ Analyzer Manufacturer _____

Affiliation _____ Model/ Serial No. _____

Date _____ Location _____

Monitor Pathlength, $L_1$ _____ Emission Outlet Pathlength, $L_2$ _____

Monitoring System Output Pathlength Corrected: ? Yes _____ No _____

Upscale Calibration Value : Actual Optical Density (Opacity) _____ (_____)

Path Adjusted Optical Density (Opacity) _____ (_____)

| Date | Time | | Percent Opacity | | | | | | | | | | Alignment | |
|---|---|---|---|---|---|---|---|---|---|---|---|---|---|---|
| | | | Zero Reading* | | Zero Drift | zero adjusted? | Upscale Calibration Reading | | Upscale Drift | Calibration Drift | span adjusted? | lens cleaned? | checked? | adjusted? |
| | Begin | End | Initial A | Final B | C = B–A | | Initial D | Final E | F = E–D | G = F–C** | | | | |
| | | | | | | | | | | | | | | |
| | | | | | | | | | | | | | | |
| | | | | | | | | | | | | | | |
| | | | | | | | | | | | | | | |
| | | | | | | | | | | | | | | |
| | | | | | | | | | | | | | | |
| | | | | | | | | | | | | | | |
| | | | | | | | | | | | | | | |
| | | | | | | | | | | | | | | |
| | | | | | | | | | | | | | | |
| | | | | | | | | | | | | | | |
| | | | | | | | | | | | | | | |
| Arithmetic Mean (Eq. 1–2) | | | | | | | | | | | | | | |
| Confidence Interval (Eq. 1–3) | | | | | | | | | | | | | | |
| Zero Drift | | | | | | | Calibration Drift | | | | | | | |

*without automatic zero compensation

**if zero was adjusted (manually or automatically) prior to upscale check, then use c = 0 .

Figure 1 - 3. Zero Calibration Drift Determination

BILLING CODE 6560-01-C

*Performance Specification 2—Specifications and Test Procedures for* $SO_2$ and $NO_x$ Continuous Monitoring Systems in Stationary Sources

1. Applicability and Principle

1.1 Applicability. This Specification contains (a) installation requirements, (b) instrument performance and equipment specifications, and (c) test procedures and data reduction procedures for evaluating the acceptability of $SO_2$ and $NO_x$ continuous monitoring systems, which may include, for certain stationary sources, diluent monitors. The test procedures in item (c), above, are not applicable to single-pass, in-situ continuous monitoring systems; these systems will be evaluated on a case-by-case basis upon written request to the Administrator and alternative test procedures will be issued separately.

1.2 Principle. Any $SO_2$ or $NO_x$ continuous monitoring system that is expected to meet this Specification is installed, calibrated, and operated for a specified length of time. During this specified time period, the continuous monitoring system is evaluated to determine conformance with the Specification.

2. Definitions

2.1 Continuous Monitoring System. The total equipment required for the determination of a gas concentration or a gas emission rate. The system consists of the following major sub-systems:

2.1.1 Sample Interface. That portion of a system that is used for one or more of the following: sample acquisition, sample transportation, sample conditioning, or protection of the monitor from the effects of the stack effluent.

2.1.2 Pollutant Analyzer. That portion of the system that senses the pollutant gas and generates an output that is proportional to the gas concentration.

2.1.3 Diluent Analyzer (if applicable). That portion of the system that senses the diluent gas (e.g., $CO_2$ or $O_2$) and generates an output that is proportional to the gas concentration.

2.1.4 Data Recorder. That portion of the monitoring system that provides a permanent record of the analyzer output. The data recorder may include automatic data reduction capabilities.

2.2 Types of Monitors. Continuous monitors are categorized as "extractive" or "in-situ," which are further categorized as "point," "multipoint," "limited-path," and "path" type monitors or as "single-pass" or "double-pass" type monitors.

2.2.1 Extractive Monitor. One that withdraws a gas sample from the stack and transports the sample to the analyzer.

2.2.2 In-situ Monitor. One that senses the gas concentration in the stack environment and does not extract a sample for analysis.

2.2.3 Point Monitor. One that measures the gas concentration either at a single point or along a path which is less than 10 percent of the length of a specified measurement line.

2.2.4 Multipoint Monitor. One that measures the gas concentration at 2 or more points.

2.2.5 Limited-Path Monitor. One that measures the gas concentration along a path, which is 10 to 90 percent of the length of a specified measurement line.

2.2.6 Path Monitor. One that measures the gas concentration along a path, which is greater than 90 percent of the length of a specified measurement line.

2.2.7 Single-Pass Monitor. One that has the transmitter and the detector on opposite sides of the stack or duct.

2.2.8 Double-Pass Monitor. One that has the transmitter and the detector on the same side of the stack or duct.

2.3 Span Value. The upper limit of a gas concentration measurement range which is specified for affected source categories in the applicable subpart of the regulations.

2.4 Calibration Gases. A known concentration of a gas in an appropriate diluent gas.

2.5 Calibration Gas Cells or Filters. A device which, when inserted between the transmitter and detector of the analyzer, produces the desired output level on the data recorder.

2.6 Relative Accuracy. The degree of correctness including analytical variations of the gas concentration or emission rate determined by the continuous monitoring system, relative to the value determined by the reference method(s).

2.7 Calibration Error. The difference between the gas concentration indicated by the continuous monitoring system and the known concentration of the calibration gas, gas cell, or filter.

2.8 Zero Drift. The difference in the continuous monitoring system output readings before and after a stated period of operation during which no unscheduled maintenance, repair, or adjustment took place and when the pollutant concentration at the time of the measurements was zero (i.e., zero gas, or zero gas cell or filter).

2.9 Calibration Drift. The difference in the continuous monitoring system output readings before and after a stated period of operation during which no unscheduled maintenance, repair or adjustment took place and when the pollutant concentration at the time of the measurements was a high-level value (i.e., calibration gas, gas cell or filter).

2.10 Response Time. The amount of time it takes the continuous monitoring system to display on the data recorder 95 percent of a step change in pollutant concentration.

2.11 Conditioning Period. A minimum period of time over which the continuous monitoring system is expected to operate with no unscheduled maintenance, repair, or adjustments prior to initiation of the operational test period.

2.12 Operational Test Period. A minimum period of time over which the continuous monitoring system is expected to operate within the established performance specifications with no unscheduled maintenance, repair or adjustment.

3. Installation Specifications

Install the continuous monitoring system at a location where the pollutant concentration measurements are representative of the total emissions from the affected facility and are representative of the concentration over the cross section. Both requirements can be met as follows:

3.1 Measurement Location. Select an accessible measurement location in the stack or ductwork that is at least 2 equivalent diameters downstream from the nearest control device or other point at which a change in the pollutant concentration may occur and at least 0.5 equivalent diameters upstream from the effluent exhaust. Individual subparts of the regulations may contain additional requirements. For example, for steam generating facilities, the location must be downstream of the air preheater.

3.2 Measurement Points or Paths. There are two alternatives. The tester may choose either (a) to conduct the stratification check procedure given in Section 3.3 to select the point, points, or path of average gas concentration or (b) to use the options listed below without a stratification check.

Note.—For the purpose of this section, the "centroidal area" is defined as a concentric area that is geometrically similar to the stack cross section and is no greater than 1 percent of the stack cross-sectional area.

3.2.1 $SO_2$ and $NO_x$ Path Monitoring Systems. The tester may choose to centrally locate the sample interface (path) of the monitoring system on a measurement line that passes through the "centroidal area" of the cross section.

3.2.2 $SO_2$ and $NO_x$ Multipoint Monitoring Systems. The tester may choose to space 3 measurement points along a measurement line that passes through the "centroidal area" of the stack cross section, at distances of 16.7, 50.0, and 83.3 percent of the way across it (see Figure 2-1).

BILLING CODE 6560-01-M

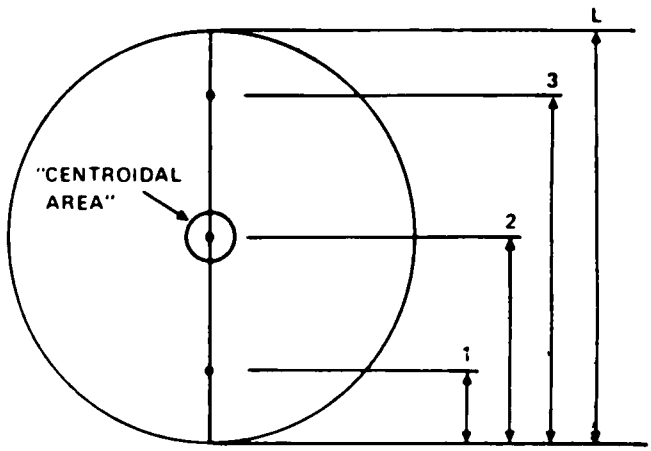


| POINT NO. | DISTANCE (% OF L) |
|---|---|
| 1 | 16.7 |
| 2 | 50.0 |
| 3 | 83.3 |

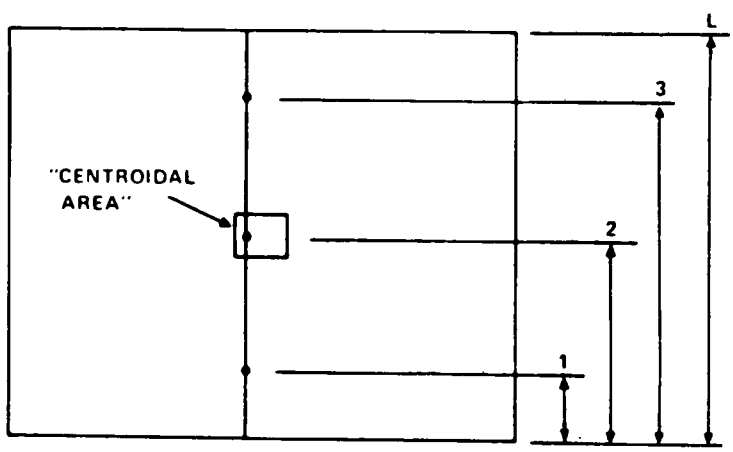


Figure 2-1. Location of an example measurement line (L) and measurement points.

BILLING CODE 6560-01-C

The following sampling strategies, or equivalent, for measuring the concentrations at the 3 points are acceptable: (a) The use of a 3-probe or a 3-hole single probe arrangment, provided that the sampling rate in each of the 3 probes or holes is maintained within 10 percent of their average rate (This option requires a procedure, subject to the approval of the Administrator, to demonstrate that the proper sampling rate is maintained); or (b) the use of a traversing probe arrangement, provided that a measurement at each point is made at least once every 15 minutes and all 3 points are traversed and sampled for equal lengths of time within 15 minutes.

3.2.3 $SO_2$ Single-Point and Limited-Path Monitoring Systems. Provided that (a) no "dissimilar" gas streams (i.e., having greater than 10 percent difference in pollutant concentration from the average) are combined upstream of the measurement location, and (b) for steam generating facilities, a $CO_2$ or $O_2$ cotinuous monitor is installed in addition to the $SO_2$ monitor, according to the guidelines given in Section 3.1 or 3.2 of Performance Specification 3, the tester may choose to monitor $SO_2$ at a single point or over a limited path. Locate the point in or centrally locate the limited path over the "centroidal area." Any other location within the inner 50 percent of the stack cross-sectional area that has been demonstrated (see Section 3.4) to have a concentration within 5 percent of the concentration at a point within the "centroidal area" may be used.

3.2.4 $NO_x$ Single-Point and Limited-Path Monitoring Systems. For $NO_x$ monitors, the tester may choose the single-point or limited-path option described in Section 3.2.3 only in coal-burning steam generators (does not include oil and gas-fired units) and nitric acid plants, which have no dissimilar gas streams combining upstream of the measurement location.

3.3 Stratification Check Procedure. Unless specifically approved in Section 3.2., conduct a stratification check and select the measurement point, points, or path as follows:

3.3.1 Locate 9 sample points, as shown in Figure 2-2, a or b. The tester may choose to use more than 9 points, provided that the sample points are located in a similar fashion as in Fgure 2-2.

3.3.2 Measure at least twice the pollutant and, if applicable (as in the case of steam generators), $CO_2$ or $O_2$ concentrations at each of the sample points. Moisture need not be determined for this step. The following methods are acceptable for the measurements: (a) Reference Methods 3 (grab-sample), 6 or 7 of this part; (b) appropriate instrumental methods which give relative responses to the pollutant (i.e., the methods need not be absolutely correct), subject to the approval of the Administrator; or (c) alternative methods subject to the approval of the Administrator. Express all measurements, if applicable, in the units of the applicable standard.

3.3.3 Calculate the mean value and select a point, points, limited-path, or path which gives an equivalent value to the mean. The point or points must be within, and the limited-path or path must pass through, the inner 50 percent of the stack cross-sectional area. All other locations must be approved by the Administrator.

BILLING CODE 6560-01-M

| POINT NO | DISTANCE (% OF D) |
|---|---|
| 1, 9 | 10 0 |
| 2, 8 | 30 0 |
| C | 50 0 |
| 3, 7 | 70 0 |
| 4 6 | 90 0 |

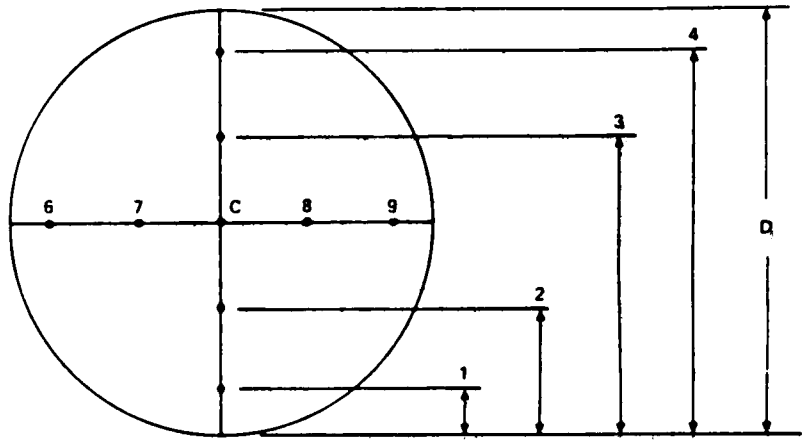


(a)

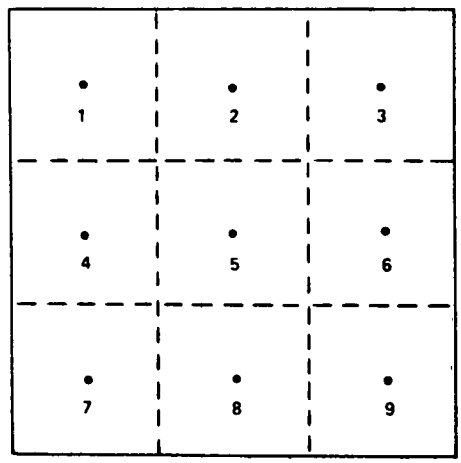


(b)

Figure 2-2. Location of 9 sampling points for stratification check.

BILLING CODE 6560-01-C

3.4 Acceptability of Single Point or Limited Path Alternative Location. Any of the applicable measurement methods mentioned in Section 3.3.2, above, may be used. Measure the pollutant and, if applicable, $CO_2$ or $O_2$ concentrations at both the centroidal area and the alternative locations. Moisture need not be measured for this test. Collect a 21-minute integrated sample or 3 grab-samples, either at evenly spaced (7 ± 2 min.) intervals over 21 minutes or all within 3 minutes, at each location. Run the comparative tests either concurrently or within 10 minutes of each other. Average the results of the 3 grab-samples.

Repeat the measurements until a minimum of 3 paired measurements spanning a minimum of 1 hour of process operation are obtained. Determine the average pollutant concentrations at the centroidal area and the alternative locations. If applicable, convert the data in terms of the standard for each paired set before taking the average. The alternative sampling location is acceptable if each alternative location value is within ± 10 percent of the corresponding centroidal area value and if the average at the alternative location is within 5 percent of the average of the centroidal area.

4. Performance and Equipment Specifications

The continuous monitoring system performance and equipment specifications are listed in Table 2-1. To be considered acceptable, the continuous monitoring system must demonstrate compliance with these specifications using the test procedures of Section 6.

5. Apparatus

5.1 Continuous Monitoring System. Use any continuous monitoring system of $SO_2$ or $NO_x$ which is expected to meet the specifications in Table 2-1. For sources which are required to convert the pollutant concentrations to other emission units using diluent gas measurements, the diluent gas continuous monitor, as described in Performance Specification 3 of this Appendix, is considered part of the continuous monitoring system. The data recorder may be an analog strip chart recorder type or other suitable device with an input signal range compatible with the analyzer output.

5.2 Calibration Gases. For continuous monitoring systems that allow the introduction of calibration gases to the analyzer, the calibration gases may be $SO_2$ in air or $N_2$, NO in $N_2$, and $NO_2$ in air or $N_2$. Two or more calibration gases may be combined in the same gas cylinder, except do not combine the NO and air. For $NO_x$ monitoring systems that oxidize NO to $NO_2$, the calibration gases must be in the form of NO. Use three calibration gas mixtures as specified below:

5.2.1 High-Level Gas. A gas concentration that is equivalent to 80 to 90 percent of the span value.

**Table 2-1.**—*Continuous Monitoring System Performance and Equipment Specifications*

| Parameter | Specification |
|---|---|
| 1. Conditioning period [a]. | ≥168 hours. |
| 2. Operational test period [a]. | ≥168 hours. |
| 3. Calibration error [b]. | ≤5 pct of each mid-level and high-level calibration value. |
| 4. Response time..... | ≤15 minutes (5 minutes for 3-point traversing probe arrangement). |
| 5. Zero drift (2-hour) [b,c]. | ≤2 pct of span value. |
| 6. Zero drift (24-hour) [b,c]. | ≤2 pct of span value. |
| 7. Calibration drift (2-hour) [b]. | ≤2 pct of span value. |
| 8. Calibration drift (24-hour) [b]. | ≤2.5 pct of span value. |
| 9. Relative accuracy [b]. | ≤20 pct of the mean value of reference method(s) test data in terms of emission standard or 10 percent of the applicable standard, whichever is greater |
| 10. Calibration gas cells or filters. | Must provide a check of all analyzer internal mirrors and lenses and all electronic circuitry including the radiation source and detector assembly which are normally use in sampling and analysis |
| 11. Data recorder chart resolution. | Chart scales must be readable to within ≤0.50 pct of full-scale |
| 12. Extractive systems with diluent monitors. | Must use the same sample interface to sample both the pollutant and diluent gases. Place in series (diluent after pollutant analyzer) or use a "T". [a] During the conditioning and operational test periods, the continuous monitoring system shall not require any corrective maintenance, repair, replacement, or adjustment other than that clearly specified as routine and required in the operation and maintenance manuals. [b] Expressed as the sum of the absolute mean value plus the 95 percent confidence interval of a series of tests divided by a reference value. [c] A low-level (5-15 percent of span value) drift test may be substituted for the zero Drift tests. |

5.2.2 Mid-Level Gas. A gas concentration that is equivalent to 45 to 55 percent of the span value.

5.2.3 Zero Gas. A gas concentration of less than 0.25 percent of the span value. Ambient air may be used for the zero gas.

5.3 Calibration Gas Cells or Filters. For continuous monitoring systems which use calibration gas cells or filters, use three certified calibration gas cells or filters as specified below:

5.3.1 High-Level Gas Cell or Filter. One that produces an output equivalent to 80 to 90 percent of the span value.

5.3.2 Mid-Level Gas Cell or Filter. One that produces an output equivalent to 45 to 55 percent of the span value.

5.3.3 Zero Gas Cell or Filter. One that produces an output equivalent to zero. Alternatively, an analyzer may produce a zero value check by mechanical means, such as a movable mirror.

5.4 Calibration Gas—Gas Cell or Filter Combination. Combinations of the above may be used.

6. Performance Specification Test Procedures.

6.1 Pretest Preparation.

6.1.1 Calibration Gas Certification. The tester may select one of the following alternatives: (a) The tester may use calibration gases prepared according to the protocol defined in Citation 10.5, i.e. These gases may be used as received without reference method analysis (obtain a statement from the gas cylinder supplier certifying that the calibration gases have been prepared according to the protocol); or (b) the tester may use calibration gases not prepared according to the protocol. In case (b), he must perform triplicate analyses of each calibration gas (mid-level and high-level, only) within 2 weeks prior to the operational test period using the appropriate reference methods. Acceptable procedures are described in Citations 10.6 and 10.7. Record the results on a data sheet (example is shown in Figure 2-3). Each of the individual analytical results must be within 10 percent (or 15 ppm, whichever is greater) of the average; otherwise, discard the entire set and repeat the triplicate analyses. If the average of the triplicate reference method test results is within 5 percent of the calibration gas manufacturer's tag value, use the tag value; otherwise, conduct at least 3 additional reference method test analyses until the results of 6 individual runs (the 3 original plus 3 additional) agree within 10 percent or 15 ppm, whichever is greater, of the average. Then use this average for the cylinder value.

Figure 2-3. Analysis of Calibration Gases[a]

Date_____(Must be within 2 weeks prior to the operational test period)

Reference Method Used_____

| Sample Run | Mid-level[b] ppm | High-level[c] ppm |
|---|---|---|
| 1 | | |
| 2 | | |
| 3 | | |
| Average | | |
| Maximum % Deviation[d] | | |

[a] Not necessary if the protocol in Citation 10.5 is used to prepare the gas cylinders.

[b] Average must be 45 to 55 percent of span value.

[c] Average must be 80 to 90 percent of span value.

[d] Must be $\leq \pm$ 10 percent of applicable average or 15 ppm, whichever is greater.

6.1.2 Calibration Gas Cell or Filter Certification. Obtain (a) a statement from the manufacturer certifying that the calibration gas cells or filters (zero, mid-level, and high-level) will produce the stated instrument responses for the continuous monitoring system, and (b) a description of the test procedure and equipment used to calibrate the cells or filters. At a minimum, the manufacturer must have calibrated the gas cells or filters against a simulated source of known concentration.

6.2 Conditioning Period. Prepare the monitoring system for operation according to the manufacturer's written instructions. At the outset of the conditioning period, zero and span the system. Use the mid-level calibration gas (or gas cell or filter) to set the span at 50 percent of recorder full-scale. If necessary to determine negative zero drift, offset the scale by 10 percent. (Do not forget to account for this when using the calibration curve.) If a zero offset is not possible or is impractical, a low-level drift may be substituted for the zero drift, by using a low-level (5 to 15 percent of span value) calibration gas (or gas cell or filter). This low-level calibration gas (or gas cell or filter) need not be certified. Operate the continuous monitoring system for an initial 168-hour period in the manner specified by the manufacturer. Except during times of instrument zero, calibration checks, and system backpurges, the continuous monitoring system shall collect and condition the effluent gas sample (if applicable), analyze the sample for the appropriate gas constituents, and produce a permanent record of the system output. Conduct daily zero and mid-level calibration checks and, when drift exceeds the daily operating limits, make adjustments. The data recorder shall reflect these checks and adjustments. Keep a record of any instrument failure during this time. If the conditioning period is interrupted because of source breakdown (record the dates and times of process shutdown), continue the 168-hour period following resumption of source operation. If the conditioning period is interrupted because of monitor failure, restart the 168-hour conditioning period when the monitor becomes functional.

6.3 Operational Test Period. Operate the continuous monitoring system for an additional 168-hour period. The continuous monitoring system shall monitor the effluent, except during periods when the system calibration and response time are checked or during system backpurges; however, the system shall produce a permanent record of all operations. Record any system failure during this time on the data recorder output sheet.

It is not necessary that the 168-hour operational test period immediately follow the 168-hour conditioning period. During the operational test period, perform the following test procedures:

6.3.1 Calibration Error Determination. Make a total of 15 nonconsecutive zero, mid-level, and high-level measurements (e.g., zero, mid-level, zero, high-level, mid-range, etc.).

This will result in a set of 5 each of zero, mid-level, and high-level measurements. Convert the data output to concentration units, if necessary, and record the results on a data sheet (example is shown in Figure 2-4). Calculate the differences between the reference calibration gas concentrations and the measurement system reading. Then calculate the mean, confidence interval, and calibration errors separately for the mid-level and high-level concentrations using Equations 2-1, 2-2, and 2-3. In Equation 2-3, use each respective calibration gas concentration for R.V.

BILLING CODE 6560-01-M

Figure 2-4. Calibration Error Determination

| Run no. | Calibration gas concentration[a] ppm | Measurement system reading ppm | Arithmetic differences ppm | |
|---|---|---|---|---|
| | A | B | A-B | |
| | | | Mid | High |
| 1 | | | | |
| 2 | | | | |
| 3 | | | | |
| 4 | | | | |
| 5 | | | | |
| 6 | | | | |
| 7 | | | | |
| 8 | | | | |
| 9 | | | | |
| 10 | | | | |
| 11 | | | | |
| 12 | | | | |
| 13 | | | | |
| 14 | | | | |
| 15 | | | | |
| Arithmetic Mean (Eq. 2-1) = | | | | |
| Confidence Interval (Eq. 2-2) = | | | | |
| Calibration Error (Eq. 2-3)[b] = | | | | |

[a] Calibration Data from Section 6.1.1 or 6.1.2

Mid-level: C = _____ppm

High-level: D = _____ppm

[b] Use C or D as R.V. in Eq. 2-3

Figure 2-5. Response Time

Date_____ High-level = _____ ppm

| Test Run | Upscale min. | Downscale min. |
|---|---|---|
| 1 | | |
| 2 | | |
| 3 | | |
| Average | A = | B = |

System Response Time (slower of A and B) = _____ min.

BILLING CODE 6560-01-C

6.3.2 Response Time Test Procedure. At a minimum, each response time test shall provide a check of the entire sample transport line (if applicable), any sample conditioning equipment (if applicable), the pollutant analyzer, and the data recorder. For in-situ systems, perform the response time check by introducing the calibration gases at the sample interface (if applicable), or by introducing the calibration gas cells or filters at an appropriate location in the pollutant analyzer. For extractive monitors, introduce the calibration gas at the sample probe inlet in the stack or at the point of connection between the rigid sample probe and the sample transport line. If an extractive analyzer is used to monitor the effluent from more than one source, perform the response time test for each sample interface.

To begin the response time test, introduce zero gas (or zero cell or filter) into the continuous monitor. When the system output has stabilized, switch to monitor the stack effluent and wait until a "stable value" has been reached. Record the upscale response time. Then, introduce the high-level calibration gas (or gas cell or filter). Once the system has stabilized at the high-level concentration, switch to monitor the stack effluent and wait until a "stable value" is reached. Record the downscale response time. A "stable value" is equivalent to a change of less than 1 percent of span value for 30 seconds or 5 percent of measured average concentration for 2 minutes. Repeat the entire procedure three times. Record the results of each test on a data sheet (example is shown in Figure 2-5). Determine the means of the upscale and downscale response times using Equation 2-1. Report the slower time as the system response time.

6.3.3 Field Test for Zero Drift and Calibration Drift. Perform the zero and calibration drift tests for each pollutant analyzer and data recorder in the continuous monitoring system.

6.3.3.1 Two-hour Drift. Introduce consecutively zero gas (or zero cell or filter) and high-level calibration gas (or gas cell or filter) at 2-hour intervals until 15 sets (before and after) of data are obtained. Do not make any zero or calibration adjustments during this time unless otherwise prescribed by the manufacturer. Determine and record the amount that the output had drifted from the recorder zero and high-level value on a data sheet (example is shown in Figure 2-6). The 2-hour periods over which the measurements are conducted need not be consecutive, but must not overlap. Calculate the zero and calibration drifts for each set. Then calculate the mean, confidence interval, and zero and calibration drifts (2-hour) using Equations 2-1, 2-2, and 2-3. In Equation 2-3, use the span value for R.V.

6.3.3.2 Twenty-Four Hour Drift. In addition to the 2-hour drift tests, perform a series of seven 24-hour drift tests as follows: At the beginning of each 24-hour period, calibrate the monitor, using mid-level value. Then introduce the high-level calibration gas (or gas cell or filter) to obtain the initial reference value. At the end of the 24-hour period, introduce consecutively zero gas (or gas cell or filter) and high-level calibration gas (or gas cell or filter); do not make any adjustments at this time. Determine and record the amount of drift from the recorder zero and high-level value on a data sheet (example is shown in Figure 2-7). Calculate the zero and calibration drifts for each set. Then calculate the mean, confidence interval, and zero and calibration drifts (24-hour) using Equations 2-1, 2-2, and 2-3. In Equation 2-3, use the span value for R.V.

BILLING CODE 6560-01-M

| Data set no. | Date | Time | | Zero Rdg | | Zero drift | Hi-level Rdg | | Span drift | Calib. drift |
|---|---|---|---|---|---|---|---|---|---|---|
| | | Begin | End | Init. A | Fin. B | C=B-A | Init. D | Fin. E | F=E-D | G=F-C |
| 1 | | | | | | | | | | |
| 2 | | | | | | | | | | |
| 3 | | | | | | | | | | |
| 4 | | | | | | | | | | |
| 5 | | | | | | | | | | |
| 6 | | | | | | | | | | |
| 7 | | | | | | | | | | |
| 8 | | | | | | | | | | |
| 9 | | | | | | | | | | |
| 10 | | | | | | | | | | |
| 11 | | | | | | | | | | |
| 12 | | | | | | | | | | |
| 13 | | | | | | | | | | |
| 14 | | | | | | | | | | |
| 15 | | | | | | | | | | |
| Arithmetic Mean (Eq. 2-1) | | | | | | | | | | |
| Confidence Interval (Eq. 2-2) | | | | | | | | | | |
| Zero Drift[a] | | | | | | | Calibration drift[a] | | | |

[a] Use Equation 2-3, with span value for R. V.

Figure 2-6. Zero and Calibration Drift (2 hour)

BILLING CODE 6560-01-C

| Data set no. | Date | Time | | Zero Rdg | | Zero drift | Hi-level Rdg | | Span drift | Calib. drift |
|---|---|---|---|---|---|---|---|---|---|---|
| | | Begin | End | Init. A | Fin B | C=B-A | Init. D | Fin. E | F=E-D | G=F-C |
| 1 | | | | | | | | | | |
| 2 | | | | | | | | | | |
| 3 | | | | | | | | | | |
| 4 | | | | | | | | | | |
| 5 | | | | | | | | | | |
| 6 | | | | | | | | | | |
| 7 | | | | | | | | | | |
| Arithmetic Mean (Eq. 2-1) | | | | | | | | | | |
| Confidence Interval (Eq. 2-2) | | | | | | | | | | |
| Zero drift | | | | | | | Calibration drift[a] | | | |

[a] Use Equation 2-3, with the span value for R. V.

Figure 2-7. Zero and Calibration Drift (24-hour)

Note.—Automatic zero and calibration adjustments made by the monitoring system without operator intervention or initiation are allowable at any time. Manual adjustments, however, are allowable only at 24-hour intervals, unless a shorter time is specified by the manufacturer.

6.4 System Relative Accuracy. Unless otherwise specified in an applicable subpart of the regulations, the reference methods for $SO_2$, $NO_x$, diluent ($O_2$ or $CO_2$), and moisture are Reference Methods 6, 7, 3, and 4, respectively. Moisture may be determined along with $SO_2$ using Method 6. See Citation 10.8. Reference Method 4 is necessary only if moisture content is needed to enable comparison between the Reference Method and monitor values. Perform the accuracy test using the following guidelines:

6.4.1 Location of Pollutant Reference Method Sample Points. The following specifies the location of the Reference Method sample points which are on the same cross-sectional plane as the monitor's. However, any cross-sectional plane within 2 equivalent diameter of straight runs may be used, by using the projected image of the monitor on the selected plane in the following criteria.

6.4.1.1 For point monitors, locate the Reference Method sample point no further than 30 cm (or 5 percent of the equivalent diameter of the cross section, whichever is less) from the pollutant monitor sample point.

6.4.1.2 For multipoint monitors, locate each Reference Method sample traverse point no further than 30 cm (or 5 percent of the equivalent diameter of the cross section, whichever is less) from each corresponding pollutant monitor sample point.

6.4.1.3 For limited-path and path monitors, locate 3 sample points on a line parallel to the monitor path and no further than 30 cm (or 5 percent of the equivalent diameter of the cross section, whichever is less) from the centerline of the monitor path. The three points of the Reference Method shall correspond to points in the monitor path at 16.7, 50.0, and 83.3 percent of the effective length of the monitor path.

6.4.2 Location of Diluent and Moisture Reference Method Sample Points.

6.4.2.1 For sources which require diluent monitors in addition to pollutant monitors, locate each of the sample points for the diluent Reference Method measurements within 3 cm of the corresponding pollutant Reference Method sample point as defined in Sections 6.4.1.1, 6.4.1.2, or 6.4.1.3. In addition, locate each pair of diluent and pollutant Reference Method sample points no further than 30 cm (or 5 percent of the equivalent diameter of the cross section, whichever is less) from *both* the diluent and pollutant continuous monitor sample points or paths.

6.4.2.2 If it is necessary to convert pollutant and/or diluent monitor concentrations to a dry basis for comparison with the Reference data, locate each moisture Reference Method sample point within 3 cm of the corresponding pollutant or diluent Reference Method sample point as defined in Sections 6.4.1.1, 6.4.1.2, 6.4.1.3, or 6.4.2.1.

6.4.3 Number of Reference Method Tests.

6.4.3.1 For $NO_x$ monitors, make a minimum of 27 $NO_x$ Reference Method measurements, divided into 9 sets.

6.4.3.2 For $SO_2$ monitors, make a minimum of 9 $SO_2$ Reference Method tests.

6.4.3.3 For diluent monitors, perform one diluent Reference Method test for each $SO_2$ and/or $NO_x$ Reference Method test(s).

6.4.3.4 For moisture determinations, perform one moisture Reference Method test for each or each set of pollutant(s) and diluent (if applicable) Reference Method tests.

Note.—The tester may choose to perform more than 9 sets of $NO_x$ measurements or more than 9 $SO_2$ reference method diluent, or moisture tests. If this option is chosen, the tester may, at his discretion, reject up to 3 of the set or test results, so long as the total number of set or test results used to determine the relative accuracy is greater than or equal to 9. Report all data including rejected data.

6.4.4 Sampling Strategy for Reference Method Tests. Schedule the Reference Method tests so that they will not be in progress when zero drift, calibration drift, and response time data are being taken. Within any 1-hour period, conduct the following tests: (a) one set, consisting of 3 individual measurements, of $NO_x$ and/or one $SO_2$; (b) one diluent, if applicable; and (c) one moisture (if needed). Whenever two or more reference tests (pollutant, diluent, and moisture) are conducted, the tester may choose to run all these reference tests within a 1-hour period. However, it is recommended that the tests be run concurrently or consecutively within a 4-minute interval if two reference tests employ grab sampling techniques. Also whenever an integrated reference test is run together with grab sample reference tests, it is recommended that the integrated sample be started one-sixth the test period before the first grab sample is collected.

In order to properly correlate the continuous monitoring system and Reference Method data, mark the beginning and end of each Reference Method test period (including the exact time of day) on the pollutant and diluent (if applicable) chart recordings. Use one of the following strategies for the Reference Method tests:

6.4.4.1 Single Point Monitors. For single point sampling, the tester may: (a) take a 21-minute integrated sample (e.g. Method 6, Method 4, or the integrated bag sample technique of Method 3); (b) take 3 grab samples (e.g. Method 7 or the grab sample technique of Method 3), equally spaced at 7-minute (±2 min) intervals (or one-third the test period); or (c) take 3 grab samples over a 3-minute test period.

6.4.4.2 Multipoint or Path Monitors. For multipoint sampling, the tester may either: (a) make a 21-minute integrated sample traverse, sampling for 7 minutes (±2 min) (or one-third the test period) at each point; or (b) take grab samples at each traverse point, scheduling the grab samples to that they are an equal interval (7±2 minutes) of time apart (or one-third the test period).

Note.—If the number of sample points is greater than 3, make appropriate adjustments to the individual sampling time intervals. At times NSPS performance test data may be used as part of the data base of the continuous monitoring relative accuracy tests. In these cases, other test periods as specified in the applicable subparts of the regulations may be used.

6.4.5 Correlation of Reference Method and Continuous Monitoring System Data. Correlate the continuous monitoring system data with the Reference Method test data, as to the time and duration of the Reference Method tests. To accomplish this, first determine from the continuous monitoring system chart recordings, the integrated average pollutant and diluent (if applicable) concentration(s) for each Reference Method test period. Be sure to consider system response time. Then, compare each integrated average concentration against the corresponding average concentration obtained by the Reference Method; use the following guidelines to make these comparisons:

6.4.5.1 If the Reference Method is an integrated sampling technique (e.g., Method 6), make a direct comparison of the Reference Method results and the continuous monitoring system integrated average concentration.

6.4.5.2 If the Reference Method is a grab-sampling technique (e.g., Method 7), first average the results from all grab-samples taken during the test period, and then compare this average value against the integrated value obtained from the continuous monitoring system chart recording

6.5 Data Summary for Relative Accuracy Tests. Summarize the results on a data sheet; example is shown in figure 2-8. Calculate the arithmetic differences between the reference method and the continuous monitoring output sets. Then calculate the mean, confidence interval, and system relative accuracy, using Equation 2-1, 2-2, and 2-3. In Equation 2-3, use the average of the reference method test results for R.V.

7. Equations

7.1 Arithmetic Mean. Calculate the mean of a data set as follows:

$$\bar{x} = \frac{1}{n} \sum_{i=1}^{n} x_i \qquad \text{Equation 1-2}$$

Where:

$\bar{x}$ = arithmetic mean.
n = number of data points.
$\Sigma x_i$ = algebraic sum of the individual values, $x_i$.

When the mean of the differences of pairs of data is calculated, be sure to correct the data for moisture.

7.2 Confidence Interval. Calculate the 95 percent confidence interval (two-sided) as follows:

$$C.I._{95} = \frac{t_{.975}}{\sqrt{n-1}} \sqrt{n\Sigma x_i^2 - (\Sigma x_i)^2} \qquad \text{Equation 1-3}$$

Where:

$C.I._{95}$ = 95 percent confidence interval estimate of mean value.
$t_{.975} = t_{(1-\alpha/2)}$ (see Table 2-2)

BILLING CODE 6560-01-M

Table 2-2.—*t* - *Values*

| n* | .975 | n* | .975 | n* | .975 |
|---|---|---|---|---|---|
| 2 | 12.706 | 7 | 2.447 | 12 | 2.201 |
| 3 | 4.303 | 8 | 2.365 | 13 | 2.179 |
| 4 | 3.182 | 9 | 2.306 | 14 | 2.160 |
| 5 | 2.776 | 10 | 2.262 | 15 | 2.145 |
| 6 | 2.571 | 11 | 2.228 | 16 | 2.131 |

* The values in this table are already corrected for n-1 degrees of freedom. Use *n* equal to the number of individual values.

| Run no. | Date and time | $SO_2$ | | | $NO_x$ [b] | | | $CO_2$ or $O_2$ [a] | | $SO_2$ [a] | | | $NO_x$ [a] | | |
|---|---|---|---|---|---|---|---|---|---|---|---|---|---|---|---|
| | | RM | M | Diff | RM | M | Diff | RM | M | RM | M | Diff | RM | M | Diff |
| | | ppm [d] | | | ppm [d] | | | % [d] | % [d] | mass/GCV | | | mass/GCV | | |
| 1 | | | | | | | | | | | | | | | |
| 2 | | | | | | | | | | | | | | | |
| 3 | | | | | | | | | | | | | | | |
| 4 | | | | | | | | | | | | | | | |
| 5 | | | | | | | | | | | | | | | |
| 6 | | | | | | | | | | | | | | | |
| 7 | | | | | | | | | | | | | | | |
| 8 | | | | | | | | | | | | | | | |
| 9 | | | | | | | | | | | | | | | |
| 10 | | | | | | | | | | | | | | | |
| 11 | | | | | | | | | | | | | | | |
| 12 | | | | | | | | | | | | | | | |
| Average | | | | | | | | | | | | | | | |
| Confidence Interval | | | | | | | | | | | | | | | |
| Accuracy [c] | | | | | | | | | | | | | | | |

[a] For steam generators [b] Average of 3 samples [c] Use average of reference method test results for R.V.

[d] Make sure that RM and M data are on a consistent basis, either wet or dry

Figure 2-8. Relative accuracy determination

BILLING CODE 6560-01-C

7.3 Relative Accuracy. Calculate the relative accuracy of a set of data as follows:

$$R.A. = \frac{|\bar{x}| + |C.I._{95}|}{R.V.} \times 100 \quad \text{Equation 2-3}$$

where: R. A. = relative accuracy

$\bar{x}$ = absolute value of the arithmetic mean (from Equation 2-1).

$|C.I._{95}|$ = absolute value of the 95 percent confidence interval (from Equation 2-2).

R.V. = reference value, as defined in Sections 6.3.1, 6.3.3.1, 6.3.3.2, and 6.5.

8. Reporting

At a minimum (check with regional offices for additional requirements, if any) summarize the following results in tabular form: calibration error for mid-level and high-level concentrations, the slower of the upscale and downscale response times, the 2-hour and 24-hour zero and calibration drifts, and the system relative accuracy. In addition, provide, for the conditioning and operational test periods, a statement to the effect that the continuous monitoring system operated continuously for a minimum of 168 hours each, except during times of instrument zero, calibration checks, system backpurges and source breakdown, and that no corrective maintenance, repair, replacement, or adjustment other than that clearly specified as routine and required in the operation and maintenance manuals were made. Also include the manufacturer's certification statement (if applicable) for the calibration gas, gas cells, or filters. Include all data sheets and calculations and charts (data outputs), which are necessary to substantiate that the system met the performance specifications.

9. Retest

If the continuous monitoring system operates within the specified performance parameters of Table 2-1, the operational test period will be successfully concluded. If the continuous monitoring system fails to meet any of the specifications, repeat that portion of the testing which is related to the failed specification.

10. Bibliography

10.1 "Monitoring Instrumentation for the Measurement of Sulfur Dioxide in Stationary Source Emissions." Environmental Protection Agency, Research Triangle Park, N.C., February 1973.

10.2 "Instrumentation for the Determination of Nitrogen Oxides Content of Stationary Source Emissions." Environmental Protection Agency, Research Triangle Park, N.C., Volume 1, APTD-0847, October 1971; Volume 2, APTD-0942, January 1972.

10.3 "Experimental Statistics." Department of Commerce, Handbook 91, 1963, pp. 3-31, paragraphs 3-3.1.4.

10.4 "Performance Specifications for Stationary-Source Monitoring Systems for Gases and Visible Emissions." Environmental Protection Agency, Research Triangle Park, N.C., EPA-650/2-74-013, January 1974.

10.5 Traceability Protocol for Establishing True Concentrations of Gases Used for Calibration and Audits of Continuous Source Emission Monitors (Protocol No. 1). June 15, 1978. Environmental Monitoring and Support Laboratory, Office of Research and Development, U.S. EPA, Research Triangle Park, N.C. 27711.

10.6 Westlin, P. R. and J. W. Brown. Methods for Collecting and Analyzing Gas Cylinder Samples. Emission Measurement Branch, Emission Standards and Engineering Division, Office of Air Quality Planning and Standards, U.S. EPA, Research Triangle Park, N.C., July 1978.

10.7 Curtis, Foston. A Method for Analyzing $NO_x$ Cylinder Gases—Specific Ion Electrode Procedure. Emission Measurement Branch, Emission Standards and Engineering Division, Office of Air Quality and Standards, U.S. EPA, Research Triangle Park, N.C., October 1978.

10.8 Stanley, Jon and P. R. Westlin. An Alternative Method for Stack Gas Moisture Determination. Emission Measurement Branch, Emission Standards and Engineering Division, Office of Air Quality Planning and Standards, U.S. EPA, Research Triangle Park, N.C., August 1978.

*Performance Specification 3—Specifications and Test Procedures for $CO_2$ and $O_2$ Continuous Monitors in Stationary Sources*

1. Applicability and Principle

1.1 Applicability. This Specification contains (a) installation requirements, (b) instrument performance and equipment specifications, and (c) test procedures and data reduction procedures for evaluating the acceptability of continuous $CO_2$ and $O_2$ monitors that are used as diluent monitors. The test procedures are primarily designed for systems that introduce calibration gases directly into the analyzer; other types of monitors (e.g., single-pass monitors, as described in Section 2.2.7 of Performance Specification 2 of this Appendix) will be evaluated on a case-by-case basis upon written request to the Administrator, and alternative procedures will be issued separately.

1.2 Principle. Any $CO_2$ or $O_2$ continuous monitor, which is expected to meet this Specification, is operated for a specified length of time. During this specified time period, the continuous monitor is evaluated to determine conformance with the Specification.

2. Definitions

The definitions are the same as those listed in Section 2 of Performance Specification 2.

3. Installation Specifications

3.1 Measurement Location and Measurement Points or Paths. Select and install the continuous monitor at the same sampling location used for the pollutant monitor(s). Locate the measurement points or paths as shown in Figure 3-1 or 3-2.

3.2 Alternative Measurement Location and Measurement Points or Paths. The diluent monitor may be

installed at a different location from that of the pollutant monitor, provided that the diluent gas concentrations at both locations differ by no more than 5 percent from that of the pollutant monitor location for $CO_2$ or the quantity, 20.9-percent $O_2$, for $O_2$. See Section 3.4 of Performance Specification 2 for the demonstration procedure.

4. Continuous Monitor Performance and Equipment Specifications

The continuous monitor performance and equipment specifications are listed in Table 3–1. To be considered acceptable, the continuous monitor must demonstrate compliance with these specifications, using the test procedures in Section 6.

5. Apparatus

5.1 $CO_2$ or $O_2$ Continuous Monitor. Use any continuous monitor, which is expected to meet this Specification. The data recorder may either be an analog strip-chart recorder or other suitable device having an input voltage range compatible with the analyzer output.

5.2 Calibration Gases. Diluent gases shall be air or $N_2$ for $CO_2$ mixtures, and shall be $N_2$ for $O_2$ mixtures. Use three calibration gases as specified below:

BILLING CODE 6560-01-M

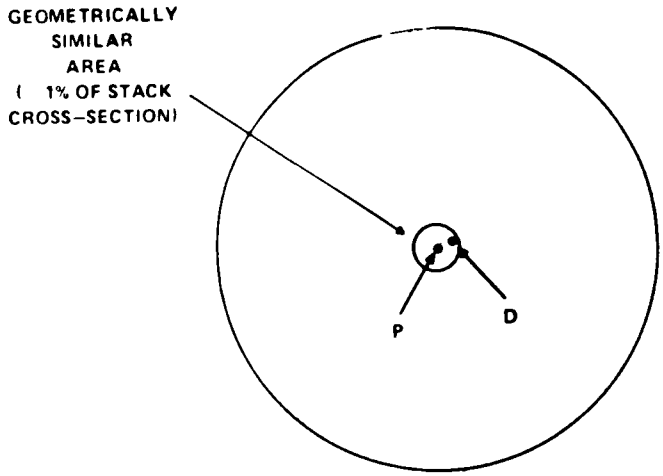


(a)

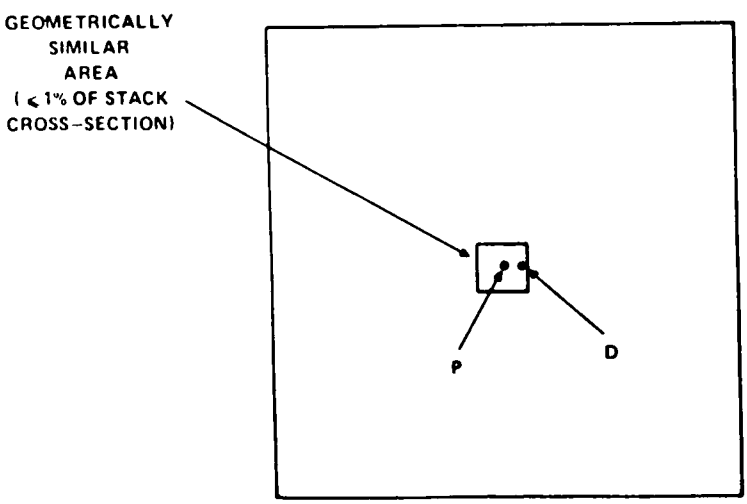


(b)

Figure 3-1. Relative locations of pollutant (P) and diluent (D) measurement points in (a) circular and (b) rectangular ducts. P is located at the centroid of the geometrically similar area. Note: The geometrically similar area need not be concentric.

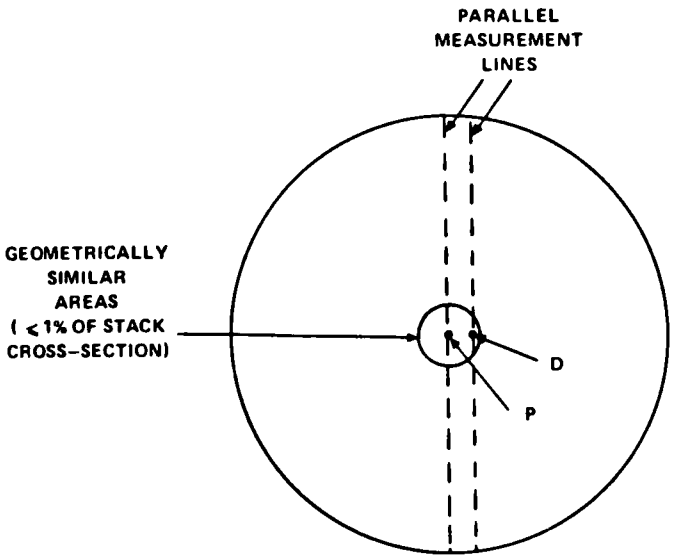


(a)

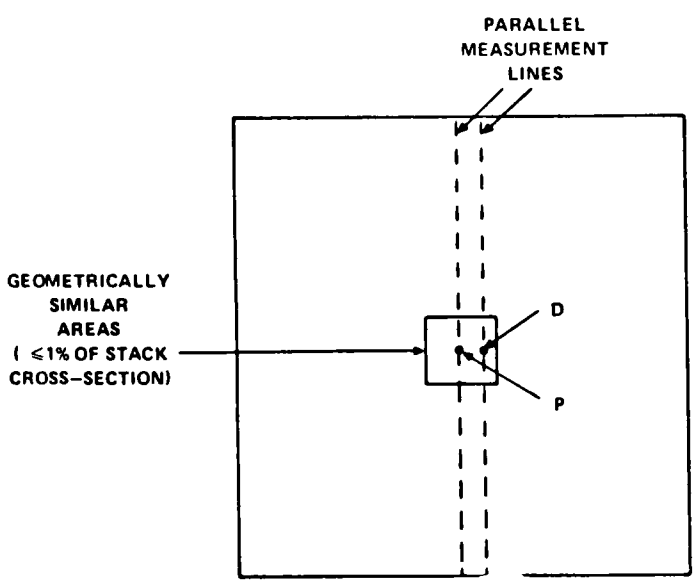


(b)

Figure 3-2. Relative locations of pollutant (P) and diluent (D) measurement paths for (a) circular and (b) rectangular ducts. P is located at the centroid of both the geometrically similar areas and the pollutant monitor path cross-sectional areas. D is located at the centroid of the diluent monitor path cross-sectional area.

BILLING CODE 6560-01-C

Table 3-1.—*Performance and Equipment Specifications*

| Parameter | Specification |
|---|---|
| 1 Conditioning period [a] | ≥ 168 hours |
| 2 Operational test period [a] | ≥ 168 hours |
| 3 Calibration error [b] | ≤ 5 pct. of each (mid-range and high-range only) calibration gas value |
| 4 Response time | ≤ 15 minutes |
| 5 Zero drift (2-hour) [b] [c] | ≤ 0.4 pct. $CO_2$ or $O_2$ |
| 6 Zero drift (24-hour) [b] [c] | ≤ 10.5 pct. $CO_2$ or $O_2$ |
| 7 Calibration drift (2-hour) [b] | ≤ 0.4 pct. $CO_2$ or $O_2$ |
| 8 Calibration drift (24-hour) [b] | ≤ 0.5 pct. $CO_2$ or $O_2$ |
| 9 Data recorder chart resolution | Chart scales must be readable to within ≤ 0.50 pct. of full-scale |
| 10 Extractive monitors | Must use the same interface as the pollutant monitor. Place in a series (diluent after pollutant analyzer) or use a "T." |

[a] During the conditioning and operational test periods, the continuous monitor shall not require any corrective maintenance, repair, replacement, or adjustment other than that clearly specified as routine and required in the operation and maintenance manuals.

[b] Expressed as the sum of the absolute mean value plus the 95 percent confidence interval of a series of tests.

[c] A low-level (5–15 percent of span value) drift tests may be substituted for the zero drift tests.

5.2.1 High-Level Gas. A $CO_2$ or $O_2$ concentration of 20.0 to 22.5 percent. For $O_2$ analyzers, ambient air (20.9 percent $O_2$) may be used as the high-range calibration gas; lower high-level $O_2$ concentration may be used, subject to the approval of the Administrator.

5.2.2 Mid-Level Gas. A $CO_2$ or $O_2$ concentration of 11.0 to 14.0 percent; for $O_2$ analyzers, concentrations in the operational range may be used.

5.2.3 Zero Gas. A $CO_2$ or $O_2$ concentration of less than 0.05 percent. For $CO_2$ monitors, ambient air (0.03 percent $CO_2$) may be used as the zero gas.

6. Performance Specification Test Procedures.

6.1 Calibration Gas Certification. Follow the procedure as outlined in Section 6.1.2 of Performance Specification 2, except use 0.5 percent $CO_2$ or $O_2$ instead of the 15 ppm. Figure 3-3 is provided as an example data sheet.

6.2 Conditioning Period. Follow the same procedure outlined in Section 6.2 of Performance Specification 2.

6.3 Operational Test Period. Follow the same procedures outlined in Section 6.3 of Performance Specification 2, to evaluate the calibration error, response time, and the 2-hour and 24-hour zero and calibration drifts. See example data sheets (Figures 3-4 through 3-7).

BILLING CODE 6560-01-M

Figure 3-3. Analysis of Calibration Gases[a]

Date_____ (Must be within 2 weeks prior to the operational test period)

Reference Method Used_____

| Sample run | Mid-range[c] ppm | High-range[d] ppm |
|---|---|---|
| 1 | | |
| 2 | | |
| 3 | | |
| Average | | |
| Maximum % deviation[e] | | |

[a] Not necessary if the protocol in Citation 10.5 of Performance Specification 2 is used to prepare the gas cylinders.

[c] Average must be 11.0 to 14.0 percent; for $O_2$, see Section 5.2.2.

[d] Average must be 20.0 to 22.5 percent; for $O_2$, see Section 5.2.1.

[e] Must be $\leq \pm$ 10 percent of applicable average or 0.5 percent, whichever is greater.

Figure 3-4. Calibration Error Determination

| Run No. | Calibration Gas Concentration[a] ppm | Measurement System Reading ppm | Arithmetic Differences ppm | |
|---|---|---|---|---|
| | A | B | A-B | |
| | | | Mid | High |
| 1 | | | | |
| 2 | | | | |
| 3 | | | | |
| 4 | | | | |
| 5 | | | | |
| 6 | | | | |
| 7 | | | | |
| 8 | | | | |
| 9 | | | | |
| 10 | | | | |
| 11 | | | | |
| 12 | | | | |
| 13 | | | | |
| 14 | | | | |
| 15 | | | | |
| Arithmetic Mean (Eq. 2-1)[b] = | | | | |
| Confidence Interval (Eq. 2-2)[b] = | | | | |
| Calibration Error (Eq. 2-3)[b,c] = | | | | |

[a] Calibration Data from Section 6.1

Mid-level: C = _____ ppm

High-level: D = _____ ppm

[b] See Performance Specification 2

[c] Use C or D as R. V.

Figure 3-5. Response Time

Date _____ High-Range = _____ ppm

| Test Run | Upscale min | Downscale min |
|---|---|---|
| 1 | | |
| 2 | | |
| 3 | | |
| Average | A = | B = |

System Response Time (slower of A and B) = _____ min.

| Data set no | Date | Time | | Zero Rd. | | Zero drift | Hi-Range Rdg. | | Span drift | Calib. drift |
|---|---|---|---|---|---|---|---|---|---|---|
| | | Begin | End | Init. | Fin. | | Init. | Fin. | | |
| | | | | A | B | C=B-A | D | E | F=E-D | G=F-C |
| | | | | | | | | | | |
| | | | | | | | | | | |
| | | | | | | | | | | |
| | | | | | | | | | | |
| | | | | | | | | | | |
| | | | | | | | | | | |
| | | | | | | | | | | |
| | | | | | | | | | | |
| | | | | | | | | | | |
| | | | | | | | | | | |
| | | | | | | | | | | |
| | | | | | | | | | | |
| | | | | | | | | | | |
| | | | | | | | | | | |
| | | | | | | | | | | |
| Arithmetic Mean (Eq. 2-1)[a] | | | | | | | | | | |
| Confidence Interval (Eq. 2-2)[a] | | | | | | | | | | |
| Zero drift[b] | | | | | | | Calibration drift[b] | | | |

[a] From Performance Specification 2.

[b] Use Equation 2-3 of Performance Specification 2 and 1.0 for R. V.

Figure 3-6. Zero and Calibration Drift (2 hour)

| Data set no. | Date | Time | | Zero Rdg | | Zero drift | Hi-Range Rdg | | Span drift | Calib. drift |
|---|---|---|---|---|---|---|---|---|---|---|
| | | Begin | End | Init. | Fin. | | Init. | Fin. | | |
| | | | | A | B | C=B-A | D | E | F=E-D | G=F-C |
| | | | | | | | | | | |
| | | | | | | | | | | |
| | | | | | | | | | | |
| | | | | | | | | | | |
| | | | | | | | | | | |
| | | | | | | | | | | |
| | | | | | | | | | | |
| Arithmetic Mean (Eq. 2-1)[a] | | | | | | | | | | |
| Confidence Interval (Eq. 2-2)[a] | | | | | | | | | | |
| Zero drift [b] | | | | | | | Calibration drift [b] | | | |

[a] From Performance Specification 2.

[b] Use Equation 2-3 of Performance Specification 2, with 1.0 for R. V.

Figure 3-7. Zero and Calibration Drift (24-hour)

BILLING CODE 6560-01-C

6.4 System Relative Accuracy. [Note: The relative accuracy is not determined separately for the diluent monitor, but is determined for the pollutant-diluent system.] Unless otherwise specified in an applicable subpart of the regulations, the Reference Methods for the diluent concentration determination shall be Reference Method 3 for $CO_2$ or $O_2$. For this test, Fyrite analyses may be used for $CO_2$ and $O_2$ determinations. Perform the measurements using the guidelines below (an example data sheet is shown in Figure 2-8 of Performance Specification 2):

6.4.1 Location of Reference Method 3 Sampling Points. Locate the diluent Reference Method sampling points according to the guidelines given in Section 6.4.2.1 of Performance Specification 2.

6.4.2 Number of Reference Method Tests. Perform one Reference Method 3 test according to the guideline in Performance Specification 2.

6.4.3 Sampling Strategy for Reference Method Tests. Use the basic Reference Method sampling strategy outlined in Section 6.4.4 (and related sub-sections) of Performance Specification 2.

6.4.4 Correlation of Reference Method and Continuous Monitor Data. Use the guidelines given in Section 6.4.5 of Performance Specification 2.

7. Equations, Reporting, Retest, and Bibliography. The procedure and citations are the same as in Sections 7 through 10 of Performance Specification 2.

[FR Doc. 79-31033 Filed 10-9-79; 8:45 am]
BILLING CODE 6560-01-M

**Standards of Performance for New Stationary Sources: Petroleum Refineries Review of Standards**

**AGENCY:** Environmental Protection Agency (EPA).

**ACTION:** Review of Standards.

*Particulate Matter*

The available data indicate that the current limitation on particulate matter emissions accurately reflects the performance capability of best available control systems. It is, therefore, concluded that no revision should be made to the particulate standard. New technologies such as high efficiency separators, high temperature regenerators, and new catalysts have reduced the total quantity of uncontrolled particulate matter emitted. However, the method established in the standard for calculating the allowable emissions effectively corrects for the reduction due to changes in catalysts and operating procedures.

While it is concluded that the particulate matter standard should not be revised, a question has been raised as to the validity of Reference Method 5 when high concentrations of condensible sulfur compounds are present. This test method, which is used to measure compliance with the particulate standard, operates at a nominal temperature of 120°C and, as such, is capable of collecting condensible matter which exists in gaseous form at stack temperature. If significant quantities of such condensible material exist which are not controllable by the best systems of emission reduction, then a facility employing such systems could be found to be in non-compliance with the standard. An analysis of data available when the standard was established indicated this was not a problem at that time. However, with high sulfur content feed, there is evidence that condensible sulfur oxides may exist at concentrations sufficient to affect compliance.

EPA is currently studying this question. Depending on the results of this study, EPA may revise the standard or the test method.

*Carbon Monoxide*

The present standard for carbon monoxide emissions was established at a level which would permit regenerator in situ combustion. This method of controlling carbon monoxide emissions offers production and energy efficiencies but is recognized to be less effective than a carbon monoxide boiler. No new data were obtained during this review to alter the original finding that it is not practical to control CO emissions to less than 500 ppm by in situ regeneration and, therefore, no revision in the standard is planned at this time. However, it should be noted that the recent advent and increased use of CO oxidation catalysts and additives may provide data showing that concentrations lower than 500 ppm are achievable. If such data become available, the Agency will consider revision of the standard. It should be further noted that for the purpose of attaining and maintaining the national ambient air quality standards, State Implementation Plan new source reviews may, in some cases, require greater CO emission reductions than those required by the standards of performance for new sources.

At the time the standard was established, EPA concluded that CO emissions should be continuously monitored. A requirement for such monitoring was, therefore, included in the standard. This requirement is applicable to all catalyst regenerators subject to the standard. However, the effective date of the monitoring requirement was deferred until EPA develops performance specifications for CO monitoring systems. EPA has found no basis for revising this monitoring requirement and performance specifications are currently under development and evaluation. It is planned to issue an advanced notice of proposed rulemaking in 1979 setting forth the specifications which have been developed and which will be assessed in field studies.

*Sulfur Dioxide*

The present standard currently limits $SO_2$ emissions resulting from the combustion of fuel gas. The catalyst regenerator is also a significant source of $SO_2$ emissions but is not subject to the standard. The review considered both the need to revise the current limitation and the need to include limitations on $SO_2$ emissions from the catalyst regenerator.

Available compliance test data indicate that the current standard limiting sulfur to 230 mg $H_2S$/dscm from combustion of fuel gas is being met and, in some cases, exceeded by a wide margin. Six tests showed an average of 107 mg $H_2S$/dscm and a range of 7 to 229 mg $H_2S$/dscm. While these data indicate that a reduction in the present limitation is possible, the range exhibited is consistent with the control device performance documented at the time the standard was established. On the basis of this, along with the increased sulfur content of feedstock expected with increased imports and the variable crude oil supply conditions now existing, it is concluded that the fuel gas sulfur limitation is appropriate and that no revision is needed.

A deficiency in the current standard limiting sulfur in fuel gas relates to the lack of a continuous monitoring method. EPA recognized the need for continuous monitoring at the time the standard was adopted. However, at that time, no monitoring systems had been demonstrated to be adequate for this purpose and EPA had not established performance specifications for such systems. Consequently, application of the monitoring requirement was deferred until performance specifications could be adopted. Since the adoption of the standard, EPA has pursued a program to develop and assess the performance of an $H_2S$ monitoring system. On this basis, performance specifications are now being developed. It is planned to issue an advanced notice of proposed rulemaking in 1979 setting forth the specifications which have been developed and which will be assessed in field studies.

40 CFR Part 60

**Standards of Performance for New Stationary Sources: Portland Cement Plants; Review of Standards**

**AGENCY:** Environmental Protection Agency (EPA).

**ACTION:** Review of Standards.

**SUMMARY:** EPA has reviewed the standards of performance for portland cement plants (40 CFR 60.60). The review is required under the Clean Air Act, as amended August 1977. The purpose of this notice is to announce that, based on an assessment of the industry, applicable control technology, and results of performance tests conducted pursuant to the standard, EPA has determined that no revision to the particulate emission limitation is needed but that the standard should be revised to require continuous opacity monitoring.

**DATES:** Comments must be received by December 21, 1979.

**SUPPLEMENTARY INFORMATION:**

## Background

On August 17, 1971, the Environmental Protection Agency proposed a standard under Section 111 of the Clean Air Act to control particulate matter emissions from portland cement plants. The standard, promulgated on December 23, 1971, applies to any facility constructed or modified after August 17, 1971, which manufactures portland cement by either the wet or dry process. Specific affected facilities are the: kiln, clinker cooler, raw mill system, finish mill system, raw mill dryer, raw material storage, clinker storage, finished product storage, conveyor transfer points, bagging, and bulk loading and unloading and unloading systems.

The standard prohibits the discharge into the atmosphere from any kiln any gases which:

1. Contain particulate matter in excess of 0.15 kg/Mg (0.30 lb/ton) feed to the kiln, or
2. Exhibit greater than 20 percent opacity.

The standard prohibits the discharge into the atmosphere from any clinker cooler any gases which:

1. Contain particulate matter in excess of 0.050 kg/Mg (0.10 lb/ton) feed (dry basis) to the kiln, or
2. Exhibit 10 percent opacity or greater.

The standard prohibits the discharge into the atmosphere from any affected facility other than the kiln and clinker cooler any gases which exhibit 10 percent opacity, or greater.

The Clean Air Act Amendments of 1977 require that the Administrator of the EPA review and, if appropriate, revise established standards of performance for new stationary sources at least every 4 years [Section 111(b)(1)(B)]. This notice announces that EPA has undertaken a review of the standard of performance for portland cement plants. As a result of this review, EPA has concluded that the present particulate emission limit is appropriate, and does not need revision. However, a provision to require opacity monitoring should be added. In addition, EPA is, however, planning to undertake a program, in its Office of Research and Development, to investigate and demonstrate methods such as combustion modifications which could reduce $NO_x$ emissions from combustion used in process sources such as cement plants. Positive results from this program would form the basis for a possible revision to the standard in 1982 or 1983. Comments on these findings and plans are invited.

## Findings

### *Industry Status*

Capacity. There are currently 53 cement companies producing portland cement in the U.S. The 53 companies operate 158 cement plants throughout the U.S. with single plant capacity ranging from 50,000 Mg to 2,161,000 Mg per year. The industry also includes 8 plants with only clinker grinding facilities which use either an imported or domestic clinker as feed material. Cement plants are found in nearly every State because of the high cost of transportation. The actual clinker capacity of these plants is also distributed throughout the U.S., although some regions have little capacity due to a lack of demand; and although many areas of the Country are presently experiencing cement shortages and delays, announced capacity increases in these areas are still small.

Energy Considerations. The portland cement industry is very energy intensive with energy costs accounting for approximately 40 percent of the cost of cement. Accordingly, significant emphasis in the industry is on increasing energy efficiency. For this reason, almost all new and planned construction will use the dry process which can be twice as energy efficient as the wet process. Additional savings can be realized by using preheaters, especially suspension preheaters.

These process changes have both positive and negative effects on particulate emissions. The replacement of wet process units with dry process units increases potential emissions, particularly in the grinding, mixing, blending, storage, and feeding of raw materials to the kiln. The suspension preheater, on the other hand, tends to decrease particulate emissions due to its multicyclone construction. It also ensures more thorough contact of the kiln exhaust gases with the feed material which may increase sorption of sulfur oxide from the exhaust on the feed.

Economic Considerations. Almost all cement produced is utilized by the construction industry. As a result, the production of cement follows the cyclical pattern of the construction industry. Relatively high cement production has occurred during periods of growth in new home and other construction markets, and production has decreased in such periods of recession as occurred in 1973–1975.

In contrast, over the short term, production capacity has not closely paralleled actual production. This is due apparently to the lead time required to add capacity, to the difficulty in accurately predicting future demand, and to economic and other factors including the effect of pollution control requirements on the closure of old, marginal plants.

An examination of production and capacity over the past 10 years suggests the difficulty which the industry has experienced in attempting to meet demand while avoiding excess capacity. In the early 1970's, utilization of production capacity was greater than 90 percent. However, wage and price controls were in effect from 1971 to 1973 during which time the industry experienced its lowest profit margin since the 1930's. New plant construction was postponed while some older plants were being closed. As a result, regional cement shortages occurred in 1972–1973. When price controls were removed in 1973, the price of cement jumped 14 percent and some new capacity construction was begun. Shortly thereafter, the Country entered a recession and cement production fell to 70 percent of capacity.

The cyclic occurrence of high demand exceeding capacity has been evidenced again in the past several years. The rapid growth in the construction industry since 1975 has increased the demand for cement and parts of the U.S. have seen shortages, particularly in the West. At the same time, the industry has

not rapidly added new capacity, although the Bureau of Mines projects high demand in the early 1980's.

In considering whether pollution control costs influenced the recent lag in capacity, the Council on Wage and Price Stability concluded that:

> ... the added pollution control costs do change the way a firm would consider a new investment decision by making larger price increases necessary for the expenditures to be committed. this does not mean that the imposition of these controls has necessarily cause any reduction in new capacity expenditures in the cement industry. However, this analysis does leave open the possibility that an investment decision could be changed for a marginal plant because of pollution control costs (particularly a plant selling cement for $40 per ton and using a 12 percent rate of return). (*Prices and Capacity Expansion in the Cement Industry*, Council on Wage and Price Stability, Washington, D.C., 1977.)

Since cement is already selling for as high as $53 per ton on the West Coast, it is very likely that capital investment will not be stifled by pollution control expenditures.

*Emission Control Status*

Fifty-one cement kilns and clinker coolers have been identified which are operating and are subject to the new source performance standard. Of these, 49 are in compliance with 0.15 kg/Mg kiln feed (kiln) and 0.05 kg/Mg kiln feed, (cooler) emission limits. One completed kiln has only recently been tested and data are not available; and one facility has notified its State authority that it cannot meet the standards. Also, five cement kilns potentially subject to the standard were identified for which data were not available. The number of sources with other NSPS-affected facilities was not determined, although there are none reported that are not in compliance with the applicable 10 percent opacity standard.

For the 29 kilns and 20 clinker coolers which were in compliance, the kiln test results averaged 0.073 kg/Mg and ranged from a high of 0.142kg/Mg feed to a low of 0.013kg/Mg feed. The range for kilns with emissions controlled by ESP is 0.142 to 0.020 kg/Mg, and for kilns with fabric filter baghouses the range is 0.132 to 0.013 kg/Mg dry kiln feed. The data indicate that neither the ESP nor the baghouse is significantly better at controlling cement kiln particulate matter emissions.

Cement plant clinker coolers have been tested at emission levels ranging from a high of 0.061 kg/Mg to a low of 0.005 kg/Mg dry kiln feed with a mean of 0.024 kg/Mg. Compliance test data on a single wet scrubber show emissions near the mean emission level for fabric filter baghouse controls (0.022 kg/Mg). Data for affected facilities using gravel bed filters indicate a mean emission level of 0.034 kg/Mg dry feed (0.023–0.045kg/Mg).

The compliance test data were analyzed to determine if the type of control technology, the process type (i.e., wet or dry), or interaction of process type and control technology affected the ability to control the emission of particulate matter from portland cement kilns or clinker coolers. This analysis indicates that no control technology in use today is more effective for controlling particulate matter emissions. Although comparison of mean values indicates that the possibility that emissions from dry process kilns are controlled slightly more effectively than wet process kilns, the difference is not statistically significant.

*Nitrogen Oxide Emissions*

Cement kilns are a very large and presently unregulated source of nitrogen oxides ($NO_x$) emissions. Based upon estimated $NO_x$ emissions of 1.3 kg/Mg of cement produced and 71.4 million Mg of portland cement produced in 1977, an estimated 93,000 Mg of $NO_x$ were emitted by portland cement plants that year. The main factors that result in the production of $NO_x$ are the flame and kiln temperature, the residence time that combustion gases remain at this temperature, the rate of cooling of these gases, and the quantity of excess air in the flame. Control of these factors may permit the operator to sharply reduce the emission of $NO_x$, but such practices have not been demonstrated in cement plants for $NO_x$ emissions.

*Opacity Monitoring*

When the NSPS for portland cement plants was established in 1971 no provisions were included to require continuous monitoring of opacity. This was, in part, because the presence of water vapor in the exhaust gases from wet-process facilities would affect monitor accuracy. In addition, monitoring systems had not been demonstrated at baghouse controlled facilities where stack gases are emitted from roof monitors or multiple stub stacks. However, since the standard was adopted, a monitoring system has been demonstrated at a steel plant utilizing baghouse controls and stub stacks.

**Conclusions**

On the basis of the findings which are summarized above, EPA has concluded that the current particulate matter standards are appropriate and effective and that no revision is needed. While the compliance test data do show that the mean results are well below the standards, the range of data suggest that the standard is set at a level which reflects the performance of the best systems of emission reduction.

However, it is concluded that the standard should be revised to include provisions requiring the continuous monitoring of opacity. This conclusion is based upon the demonstration of opacity monitors on baghouse stub stacks and on the shift in the portland cement industry toward the dry process, as well as EPA's belief that continuous monitoring represents an important and effective means for assuring proper operation and maintenance of particulate matter control equipment. Adoption of any opacity monitoring requirement will be preceded by a proposal and the opportunity for public comment. The Agency expects to undertake development and to propose this revision during 1980.

It is also concluded that the lack of demonstrated control technology and an emission limitation for $NO_x$ is an important deficiency. The Agency is therefore planning to evaluate, develop, and demonstrate means for limiting $NO_x$ emissions. This program, which will include other industrial process fuel users, will be aimed at transferring technology being employed to control $NO_x$ emissions from steam generators. If this proves successful, the results will be used as a basis for development of $NO_x$ standards.

**Public Participation**

All interested persons are invited to comment on this review, the conclusions, and EPA's planned action.

Dated October 16, 1979.

Douglas M. Costle,

*Administrator.*

ENVIRONMENTAL PROTECTION AGENCY

40 CFR Part 52

[FRL 1352-4]

## Approval and Promulgation of Implementation Plans; Florida: Variance for Particulates, SO2, Visible Emissions and Excess Emissions for Florida Power and Light Generating Plants

**AGENCY:** Environmental Protection Agency

**ACTION:** Proposed rule

**SUMMARY:** On August 31, 1979, the State of Florida submitted to EPA, as a SIP revision, a variance which had been adopted by the Environmental Regulation Commission. This variance allows the Florida Power & Light Company (FP&L) to continue certain operations during the current low-sulfur oil shortage. The variance relaxes the requirements which certain FP&L generating units must meet with regard to emissions of particulates and sulfur dioxide, visible emissions and excess emissions. EPA proposes to approve the revision except for certain portions which the Agency proposes to disapprove. The public is invited to comment on the proposed actions.

**DATES:** To be considered, comments must be received on or before January 3, 1980.

**ADDRESSES:** Written comments should be addressed to Archie Lee of EPA Region IV's Air Programs Branch (See EPA Region IV address below). Copies of the materials submitted by Florida may be examined during normal business hours at the following locations:

Public Information Reference Unit, Library Systems Branch, Environmental Protection Agency, 401 M Street, S.W., Washington, D.C. 20460

Library, Environmental Protection Agency, Region IV, 345 Courtland Street, N.E., Atlanta, Georgia 30308

Florida Bureau of Air Quality Management, Department of Environmental Regulation, Twin Towers Office Building, 2600 Blair Stone Road, Tallahassee, Florida 32301

**FOR FURTHER INFORMATION CONTACT:** Archie Lee of EPA Region IV's Air Programs Branch, 345 Courtland Street, N.E., Atlanta, Georgia 30308. Telephone 404/881-3286 (FTS 257-3286).

**BACKGROUND:** In early 1979 Florida Power and Light Company was unable to obtain a sufficient supply of low-sulfur fuel oil due in part to the decreased availability of crude and the disappearance of "spot market" low-sulfur oil supplies. Consequently, FP&L petitioned and received emergency relief under section 110(f) of the Clean Air Act. The relief granted under section 110(f) is limited in time and therefore the need for a longer period of relief has arisen. On August 28, 1979, the Florida Department of Environmental Regulation issued a variance which relaxes the current particulate limits of 0.1 lbs. per MM BTU and 20% opacity. Under the variance Cape Canaveral 1 & 2, Fort Myers 1 & 2, Manatee 1 & 2 and Sanford 3, 4, and 5 may emit 0.3 lbs. per MM BTU, and Port Everglades 1, 2, 3, and 4, Riviera 3 & 4, and Turkey Point 1 & 2 may emit 0.4 lbs. per MM BTU. Opacity limits for all units are relaxed to 40%. Additionally, the variance stipulates that if fuel oil with asphaltene content of less than or equal to 9% by weight is burned, the following limits will apply to all units: (1) 0.3 lbs. per MM BTU, or (2) 0.2 lbs. per MM BTU (for units with low excess air burners).

Excess emissions are allowed during periods of malfunction and startup/shutdown operations. During boiler cleaning and load changes, emission limits of 0.6 lbs. particulate per MM BTU and 60% opacity apply. (These periods are not to exceed 3 hours in any 24-hour period.) Opacity greater than 60% is allowed for not more than four 6-minute periods during the 3-hr. period, providing the unit has installed and operating, or has committed to install and operate, continuous opacity monitors.

The sulfur dioxide limitations for Manatee Units 1 & 2 are relaxed from 1.1 lb. per MM BTU to 2.75 lbs. per MM BTU.

Control strategy demonstrations purporting to show compliance with the National Ambient Air Quality Standards and PSD increments for total suspended particulates and sulfur dioxide are included with the State submittal.

EPA has reviewed the materials submitted by the State of Florida and finds the revision to be approvable except for the following areas:

1. No testing method for compliance is specified. The State, in a recent supplement to the variance, has ordered FP&L to test for particulates using EPA test method 5 or 17. This information, along with the testing method for sulfur dioxide, should be submitted to EPA as part of the SIP revision package.

2. Relaxing the TSP limits for the Turkey Point and Port Everglades plants would allow FP&L to burn higher sulfur fuel, thereby violating the sulfur dioxide Class I increments in the Everglades National Park. The alternate Class I PSD increments for sulfur dioxide were used (in the control strategy) to accommodate emissions from the Turkey Point and Port Everglades plants.

EPA has determined that since this SIP revision does not involve the permitting of a major new source or major modification, the alternative Class I increments cannot be used. Therefore the air quality impact of the SIP revision must not violate the standard Class I increments. Since the limits on allowable sulfur dioxide emissions for the Turkey Point and Port Everglades plants would not be violated even by the higher sulfur oil projected in the variance, it is evident that the current $SO_2$ emission limits applicable to these plants are not adequate to protect the Class I increments. The State should initiate action to revise the $SO_2$ emission limits for these two plants.

EPA is today proposing to approve the Florida revision except for the portions affected by the deficiencies just described; it is proposed to disapprove the latter portions.

The public is invited to participate in this rulemaking action by submitting written comments. After reviewing pertinent comments and all other information available to him, the Administrator will take final action on the Florida revision.

(Section 110 of the Clean Air Act (42 U.S.C 7410))

**ENVIRONMENTAL PROTECTION AGENCY**

**40 CFR Part 60**

**[FRL 1366-3]**

## Standards of Performance for New Stationary Sources; Adjustment of the Opacity Standard for a Fossil Fuel-Fired Steam Generator

**AGENCY:** Environmental Protection Agency (EPA).

**ACTION:** Final rule.

**SUMMARY:** This action adjusts the NSPS opacity standard (40 CFR Part 60, Subpart D) applicable to Southwestern Public Service Company's Harrington Station Unit #1 in Amarillo, Texas. The action is based upon Southwestern's demonstration of the conditions that entitle it to such an adjustment under 40 CFR 60.11(e).

**EFFECTIVE DATE:** December 28, 1979.

**ADDRESS:** Docket No. EN-79-13, containing material relevant to this rulemaking, is located in the U.S. Environmental Protection Agency, Central Docket Section, Room 2903 B, 401 M St., SW., Washington, D.C. 20460. The docket may be inspected between 8 a.m. and 4 p.m. on weekdays, and a reasonable fee may be charged for copying.

The docket is an organized and complete file of all the information submitted to or otherwise considered by the Administrator in the development of this rulemaking. The docketing system is intended to allow members of the public and industries involved to readily identify and locate documents so that they can intelligently and effectively participate in the rulemaking process.

**FOR FURTHER INFORMATION CONTACT:** Richard Biondi, Division of Stationary Source Enforcement (EN-341), Environmental Protection Agency, 401 M Street, SW., Washington, DC 20460, telephone No. 202-755-2564.

**SUPPLEMENTARY INFORMATION:**

### Background

The standards of performance for fossil fuel-fired steam generators as promulgated under Subpart D of Part 60 on December 23, 1971 (36 FR 24876) and amended on December 5, 1977 (42 FR 61537) allow emissions of up to 20% opacity (6-minute average), except that 27% opacity is allowed for one 6-minute period in any hour. This standard also requires continuous opacity monitoring and requires reporting as excess emissions all hourly periods during which there are two or more 6-minute periods when the average opacity exceeds 20%.

On December 15, 1977, Southwestern Public Service Company (SPSC) of Amarillo, Texas, petitioned the Administrator under 40 CFR 60.11(e) to adjust the 20% opacity standard applicable to its Harrington Station coal-fired Unit #1 in Amarillo, Texas. The Administrator proposed, on June 29, 1979 (44 FR 37960), to grant the petition for adjustment, concluding that SPSC had demonstrated the presence at its Harrington Station Unit #1 of the conditions that entitle it to such relief, as specified in 40 CFR 60.11(e)(3).

These final regulations are identical to the proposed ones. EPA hereby grants SPSC's petition for adjustment for Harrington Station Unit #1 from compliance with the opacity standard of 40 CFR 60.42(a)(2). As an alternative, SPSC shall not cause to be discharged into the atmosphere from the Harrington Station Unit #1 any gases which exhibit greater than 35% opacity (6 minute average), except that a maximum of 42% opacity shall be permitted for not more than one 6-minute period in any hour. This adjustment will not relieve SPSC of its obligation to comply with any other federal, state or local opacity requirements, or particulate matter, $SO_2$ or $NO_x$ control requirements.

### Comments

Two comment letters were received, both from industry and both supporting the proposed action. One industry representative approved of EPA efforts to adjust NSPS to account for well-known opacity difficulties found in large steam electric generating units which have hot side electrostatic precipitators and combust low-sulfur western coal.

A second industry representative suggested that the use of Best Available Control Technology on coal-fired units has not assured compliance with applicable opacity standards, and that opacity standards do not complement standards for particulate emissions. EPA disagrees with this comment. Violations of opacity standards generally reflect violations of mass emission standards, and EPA will continue to impose opacity standards as a valued tool in insuring proper operation and maintenance of air pollution control devices.

### Miscellaneous

This revision is promulgated under the authority of Section 111 and 301(a) of the Clean Air Act, as amended (42 U.S.C. 7411 and 7601(a)).

Dated: December 17, 1979.

**Douglas M. Costle,**

*Administrator.*

## PART 60—STANDARDS OF PERFORMANCE FOR NEW STATIONARY SOURCES

40 CFR part 60 is amended as follows:

### Subpart D—Standards of Performance for Fossil Fuel-Fired Steam Generators

1. Section 60.42 is amended by adding paragraph (b)(1) as follows:

**§ 60.42 Standard for particulate matter.**

(a) * * *

(b)(1) On and after (the date of publication of this amendment), no owner or operator shall cause to be discharged into the atmosphere from the Southwestern Public Service Company's Harrington Station Unit #1, in Amarillo, Texas, any gases which exhibit greater than 35% opacity, except that a maximum of 42% opacity shall be permitted for not more than 6 minutes in any hour.

(Sec. 111, 301(a), Clean Air Act as amended (42 U.S.C. 7411, 7601))

2. Section 60.45(g)(1) is amended by adding paragraph (i) as follows:

**§ 60.45 Emission and fuel monitoring.**

* * * * *

(g) * * *

(1) * * *

(i) For sources subject to the opacity standard of § 60.42(b)(1), excess emissions are defined as any six minute period during which the average opacity of emissions exceeds 35 percent opacity, except that one six-minute average per hour of up to 42 percent opacity need not be reported.

[FR Doc. 79-[illegible] Filed 12-27-79; 8:45 am]

BILLING CODE 6560-01-M

**ENVIRONMENTAL PROTECTION AGENCY**

**40 CFR Part 60**

**[FRL 1353-3]**

**Standards of Performance for New Stationary Sources; Ammonium Sulfate Manufacture**

**AGENCY:** Environmental Protection Agency (EPA).

**ACTION:** Proposed Rule and Notice of Public Hearing.

*Selection of Monitoring Requirements*

To further ensure that installed emission control systems continuously comply with standards of performance through proper operation and maintenance, monitoring requirements are generally included in standards of performance. In the case of ammonium sulfate dryers, the most straightforward means of ensuring proper operation and maintenance is to require monitoring of actual particulate emissions released to the atmosphere. Currently, however, there are no continuous particulate monitors in operation for ammonium sulfate dryers, and resolution of the sampling problems and development of performance specifications for continuous particulate monitors would entail a major development program. For these reasons, continuous monitoring of particulate emissions from ammonium sulfate dryers is not required by the proposed standards.

The best indirect method of monitoring proper operation and maintenance of emission control equipment is to continuously monitor the opacity of the exhaust gas. The proposed opacity limit for ammonium sulfate dryers is 15 percent. However, in the case of ammonium sulfate dryers, the character of the exhaust gas when wet scrubbers are used for emission reduction precludes the use of continuous in-stack opacity monitors. Where condensed moisture is present in the exhaust gas stream, in-stack continuous monitoring of opacity is not feasible; water droplets and steam can interfere with operation of the monitoring instrument. Since most affected facilities are likely to use wet scrubbers, continuous monitoring of opacity is not required by the proposed standards.

An alternative to particulate or opacity monitors is the use of a pressure drop monitor as a means of ensuring proper operation and maintenance of emission control equipment. For venturi scrubbers, particulate removal efficiency is related directly to pressure drop across the venturi; the higher the pressure drop, the higher the removal efficiency. For fabric filters, pressure drop is used as an indicator of excessive filter resistance or damaged filter media. Therefore, in order to provide a continuous indicator of emission control equipment operation and maintenance, the proposed standards would require that the owner or operator of any ammonium sulfate manufacturing plant subject to the standards install, calibrate, maintain, and operate a monitoring device which continuously measures and permanently records the total pressure drop across the process emission control system. The monitoring device shall have an accuracy of ±5 percent over its operating range.

The proposed standards would also require the owner or operator of any ammonium sulfate manufacturing plant subject to the standards to install, calibrate, maintain, and operate flow monitoring devices necessary to determine the mass flow of ammonium sulfate feed material to the process. The flow monitoring device shall have an accuracy of ±5 percent over its operating range. The ammonium sulfate feed streams are: for synthetic and coke oven by-product ammonium sulfate plants, the sulfuric acid feed stream to the reactor/crystallizer; for caprolactam by-product ammonium sulfate plants, the oximation ammonium sulfate stream to the ammonium sulfate plant and the oleum stream to the caprolactam rearrangement reaction.

Records of pressure drop and calibration measurements would have to be retained for at least 2 years following the date of the measurements by owners and operators subject to this subpart. This requirement is included under § 60.7(d) of the general provisions of 40 CFR Part 60.

federal register

Wednesday
February 6, 1980

Part IV

# Environmental Protection Agency

## Standards of Performance for New Stationary Sources for Electric Utility Steam Generating Units; Decision in Response to Petitions for Reconsideration

new standard under Subpart Da. While this statement is true, these units, which were designed and operated to meet the old standard, incurred only five exceedances of the new standards on a monthly basis. Moreover, a review of the available 34 months of continuous monitoring data from six utility boilers revealed that they all operated well below the applicable standard (OAQPS-78-1, V-B-1).

In addition, UARG argued that the available continuous monitoring data demonstrated that the Agency should not have relied on short-term test data. Citing Colstrip Units 1 and 2, they noted that less than one-third of the 30-day average emissions fell below the units' performance test levels of 125 ng/J (0.29 lb/million Btu) heat input and 165 ng/J (0.38 lb/million Btu) heat input, respectively. They further maintained that this had not been considered by the Agency. In fact, the Administrator recognized at the time of promulgation that emission values obtained on short-term tests could not be achieved continuously because of potential adverse side effects and therefore established emission limits well above the values measured by such tests (44 FR 42171, left column). In addition, EPA took into account the emission variability reflected by the available continuous monitoring data when it established a 30-day rolling average as the basis of determining compliance in the standards (44 FR 33586, left column).

UARG also maintained in their petition that EPA should not rely on the Colstrip continuous monitoring data because it was obtained with uncertified monitors. The Administrator recognized that the Colstrip data should not be relied on in absolute terms since monitors were probably biased high by approximately 10 percent (OAQPS 78-1, III-B-2, page 5-7). EPA's analysis of data revealed, however, that it would be appropriate to use the data to draw conclusions about variability in emissions since the shortcoming of the Colstrip monitors did not bias such findings. This data together with data obtained using certified continuous monitors at five other facilities (OAQPS 78-1, [illegible]-B-1, page 5-3) and the results from [illegible]-day test programs (manual tests performed about twice per day) at three additional plants (OAQPS 78-1, II-B-62 and II-B-70) enabled the Administrator to conclude that emission variability under low-$NO_x$ operating conditions was small and therefore the prescribed emission levels are achievable on a continuous basis.

UARG argued that since the only continuous monitoring data available was obtained from boilers manufactured by Combustion Engineering and on a limited number of coal types, the Agency did not have a sufficient basis for finding that the standards can be achieved by other manufacturers or when other types of coals are burned. The Administrator concluded after reviewing all available information that the other three major boiler manufacturers can achieve the same level of emission reduction as Combustion Engineering with a similar degree of emission variability (43 FR 42171, left column and 44 FR 33586, middle column). This finding was confirmed by statements submitted to UARG and EPA by the other vendors that their designs could achieve the final standards, although they expressed some concern about tube wastage potential (OAQPS-78-1, III-D-611, attachment-KVB report, pages 116-121 and IV-D-30). EPA has considered tube wastage (corrosion) throughout the rulemaking and has determined that it will not be a problem at the $NO_x$ emission levels required by the standards (44 FR 33602, left column). With respect to different coal types, the Agency concluded from its analysis of available data that $NO_x$ emissions are relatively insensitive to differing coal characteristics and therefore other coal types will not pose a compliance problem (43 FR 42171, left column and OAQPS-78-1, IV-B-24). UARG did not submit any data to refute this finding.

UARG also argued that the continuous monitoring data should have been accompanied by data on boiler operating conditions. EPA noted that the data were collected during extended periods representative of normal operations and therefore it reflected all operational transients that occurred. In particular, at Colstrip units 1 and 2 more than one full year of continuous monitoring data was analyzed for each unit. In view of this, EPA believes that the data base accurately reflects the degree of emission variability likely to be encountered under normal operating conditions. UARG recognized this in principle in their January 15 comments (Part 4, page 15) when they stated that "continuous monitors would measure all variations in $NO_x$ emissions due to operational transients, coal variability, pollution control equipment degradation, etc."

In their petition, UARG restated their January 1979 comments that EPA's short-term test data were not representative and therefore should not serve as a basis for the standard. As noted earlier, EPA did not rely exclusively on short-term test data in setting the final regulations. In addition, contrary to the UARG claim, EPA believes that the boiler test configurations used to achieve low-$NO_x$ operations reflect sound engineering judgement and that the techniques employed are applicable to modern boilers. This is not to say that the boiler manufacturers may not choose other approaches such as low-$NO_x$ burners to achieve the standards. While recognizing that EPA's test program was concentrated on boilers from one manufacturer, sufficient data was obtained on the other major manufacturers' boilers to confirm the Agency's finding that they would exhibit similar emission characteristics (44 FR 33586, left column). Therefore, in the absence of new information, the Administrator has no basis to reconsider his finding that the prescribed emission limitations are achievable on modern boilers produced by all four major manufacturers.

*VI. Emission Measurement and Compliance Determination*

The Utility Air Regulatory Group (UARG) raised several issues pertaining to the accuracy and reliability of continuous monitors used to determine compliance with the $SO_2$ and $NO_x$ standards. UARG particularly commented on the data from the Conesville Station. In addition, they also maintained that the sampling method for particulates was flawed. With respect to compliance determinations, UARG maintained that the method for calculating the 30-day rolling averages should be changed so that emissions before boiler outages are not included since they might bias the results. In addition, UARG argued that the standards were flawed since EPA had not included a statement as to how the Agency would consider monitoring accuracy in relation to compliance determination. With the exception of the method of calculating the 30-day rolling average and the comments on the Conesville station, the petition merely reiterated comments submitted prior to the close of the public comment period.

As to the reliability and durability of continuous monitors, information in the docket (OAQPS-78-1, II-A-88, IV-A-20, IV-A-21, and IV-A-22) demonstrates that on-site continuous monitoring systems (CMS) are capable and have operated on a long-term basis producing data which meet or exceed the minimum data requirements of the standards.

In reference to the Conesville project, UARG questioned why EPA dismissed the continuous monitoring results since it was the only long-term monitoring effort by EPA to gain instrument

operating experience. UARG maintained that this study showed monitor degradation over time and that it was representative of state-of-the-art monitoring system performance. This conclusion is erroneous. EPA does not consider the Conesville project adequate for drawing conclusions about monitor reliability because of problems which occurred during the project.

To begin with, UARG is incorrect in suggesting that the goal of the project was to obtain instrument operating experience. The primary purpose of the project was to obtain 90 days of continuous monitoring data on FGD system performance. Because of intermittent operation of the steam generator and the FGD system, this objective could not be achieved. As the end of the 90-day period approached, a decision was made to extend the test duration from three to six months. The intermittent system operation continued. As a result, when the FGD outages were deleted from the total project time of six months, the actual test duration was similar to those at the Louisville, Pittsburgh, and Chicago tests and did not, therefore, represent an extended test program.

EPA does not consider the Conesville results to be representative of state-of-the-art monitoring system performance. Because of the intermittent operation throughout the test period (OAQPS-78-1, IV-A-19, page 2), it became obvious that the goals of the program could not be met. As a result, monitoring system maintenance lapsed somewhat. For example, an ineffective sample conditioning system caused differences in monitor and reference method results (OAQPS-78-1, IV-A-20, page 3-2). If the EPA contractor had performed more rigorous quality assurance procedures, such as a repetition of the relative accuracy tests after monitor maintenance more useful results of the monitor's performance would have been obtained. Thus, the Conesville study re-emphasized the need for periodic comparisons of monitor and reference method data and the inherent value of sound quality assurance procedures.

The UARG petition suggested that the standards incorporate a statement as to how EPA will consider monitoring system accuracy during compliance determination. More specifically, UARG recommended that EPA define an error band for continuous monitoring data and explicitly state that the Agency will take no enforcement action if the data fall within the range of the error band. The Agency believes that such a provision is inappropriate. Throughout this rulemaking, EPA recognized the need for continuous monitoring systems to provide accurate and reproducible data. EPA also recognized that the accuracy of a CMS is affected by basic design principals of the CMS and by operating and maintenance procedures. For these reasons, the standards require that the monitors meet (1) published performance specifications (40 CFR Part 60 Appendix B) and (2) a rigorous quality assurance program after they are installed at a source. The performance specifications contain a relative accuracy criterion which establishes an acceptable combined limit for accuracy and reproducibility for the monitoring system. Following the performance test of the CMS, the standards specify quality assurance requirements with respect to daily calibrations of the instruments. As was noted in the rulemaking (44 FR 33611, right column), EPA has initiated laboratory and field studies to further refine the performance requirements for continuous monitors to include periodic demonstration of accuracy and reproducibility. In view of the existing performance requirements and EPA's program to further develop quality assurance procedures, the Administrator believes that the issue of continuous monitoring system accuracy was appropriately addressed. In doing so, he recognized that any questions of accuracy which may persist will have to be assessed on a case-by-case basis.

The UARG petition also raised as an issue the calculation of the 30-day rolling average emission rate. UARG maintained that the use of emission data collected before a boiler outage may not be representative of the control system performance after the boiler resumes operation. UARG indicated that boiler outage could last from a few days to several weeks and suggested that if an outage extends for more than 15 days, a new compliance period should be initiated. UARG also suggested that if a boiler outage is less than 15 days duration and the performance of the emission control system is significantly improved following boiler start-up, a new compliance period should be initiated. UARG argued that the data following start-up would be more descriptive of the current system performance and hence would provide a better basis for enforcement.

A basic premise of this rulemaking was that the standard should encourage not only installation of best control systems but also effective operating and maintenance procedures (44 FR 33595 center column, 33601 right column, and 33597 right column). The 30-day rolling average facilitates this objective. In selecting this approach, the Agency recognized that a 30-day average better reflects the engineering realities of $SO_2$ and $NO_x$ control systems since it affords operators time to identify and respond to problems that affect control system efficiency. Daily enforcement (rolling average) was specified in order to encourage effective operating and maintenance procedures. Under this approach, any improvement in emission control system performance following start-up will be reflected in the compliance calculation along with efficiency degradations occurring before the outage. Therefore, the 30-day rolling average provides an accurate picture of overall control system performance.

On the other hand, the UARG suggestion would provide a distorted description of system performance since it would discount certain episodes of poor control system performance. That is, the system operator could allow the control system to degrade and then shut-down the boiler before a violation of the standard occurred. After start-up and any required maintenance, a new compliance period would commence, thereby excusing any excursions prior to a shut-down. In addition, since a new averaging period would be initiated the Agency would be unable to enforce the standard for the first 29 boiler operating days after the boiler had resumed operation. In the face of this potential for circumvention of the standards, the Administrator rejects the UARG approach.

UARG also reiterated their previous comments that EPA did not properly consider the accuracy and precision of Reference Method 5 for measuring particulate concentrations at or below 13 ng/J (0.03 lb/million Btu) heat input. EPA has recognized throughout this rulemaking that obtaining accurate and precise measurements of very low concentrations of particulate matter is difficult. In view of this, detailed and exacting procedures for the clean-up and analyses of the sample probe, filter holder, and the filter were specified in Method 5 to assure accuracy in determining the mass collected. Additionally, EPA has required that the sampling time be increased from 60 minutes to 120 minutes. This will increase the total sample volume from a minimum of 30 dscf to 60 dscf, thus increasing the total mass collected to about 100 mg at a loading of 13 ng/J (0.03 lb/million Btu) heat input. EPA has concluded that measurement of mass at this level can be reproduced within ±10 percent.

UARG also maintained that less than ideal sampling can cause particulate emission measurements to be inaccurate

and this has not been evaluated. EPA has addressed the question of determining representative locations and the number of sampling points in some detail in the reference methods and appropriate subparts. These procedures were designed to assure accurate measurements. EPA has also evaluated the effects of less than ideal sampling locations and concluded that generally the results would be biased below actual emissions. Assessment of the extent of possible biases in measurement data, however, must be made on a case-by-case basis.

UARG raised again the issue of acid mist generated by the FGD system being collected in the Reference Method 5 sample, therefore rendering the emission limit unachievable. EPA has recognized this problem throughout the rulemaking. In response to the Agency's own findings and the public comments, the standards permit determination of particulate emissions upstream of the scrubber. In addition, EPA announced that it is studying the effect of acid mist on particulate collection and is developing procedures to correct the collected mass for the acid mist portion.

*VII Applicability of Standards*

Sierra Pacific Power Company and Idaho Power Company (collectively, "Sierra Pacific") petitioned the Administrator to reconsider the definition of "affected facility," asking that the applicability date of the standards be established as the date of promulgation rather than the date of proposal. 40 CFR 60.40a provides:

(a) The affected facility to which this subpart applies is each electric utility steam generating unit:

* * *

(2) For which construction or modification is commenced after September 18, 1978.

September 19, 1978, is the date on which the proposed standard was published in the **Federal Register**. EPA based this definition on sections 111(a)(2) and 111(b)(6) of the Act. Section 111(a)(2) provides:

The term "new source" means any stationary source, the construction or modification of which is commenced after the publication of regulations (or, if earlier, proposed regulations) prescribing a standard of performance under this section which will be applicable to such source.

Section 111(b)(6) includes a similar provision specifically drafted to govern the applicability date of revised standards for fossil-fuel burning sources (of which this standard is the chief example.) It provides:

Any new or modified fossil fuel-fired stationary source which commences construction prior to the date of publication of the proposed revised standards shall not be required to comply with such revised standards.

Sierra Pacific does not dispute that the Agency's definition of affected facility complies with the literal terms of sections 111(a)(2) and 111(b)(6). Sierra Pacific maintains, however, that the definition is unlawful, because the standard was promulgated more than 6 months after the proposal, in violation of sections 111(b)(1)(B) and 307(d)(10). Section 111(b)(1)(B) provides that a standard is to be promulgated within 90 days of its proposal. Section 307(d)(10) allows the Administrator to extend promulgation deadlines, such as the 90-day deadline in section 111(b)(1)(B), to up to 6 months after proposal. Sierra Pacific argues that section 111(a)(2) does not apply unless the deadlines in sections 111(b)(1)(B) and 307(d)(10) are met. In this case the final standard was promulgated on June 11, 1979, somewhat less than 9 months after proposal. (It was announced by the Administrator at a press conference on May 25, 1979, and signed by him on June 1, 1979.)

In the Administrator's view, the applicability date is properly the date of proposal. First, the plain language of section 111(a)(2) provides that the applicability date is the date of proposal. Second, the legislative history of section 111 shows that Congress did not intend that the applicability date should be the date of proposal only where a standard was promulgated within 90 days of proposal. Section 111(a)(2) took its present form in the conference committee bill that became the 1970 Clean Air Act Amendments, whereas the 90-day requirement came from the Senate bill, and there is no indication that Congress intended to link these two provisions.[2]

Moreover, this interpretation represents longstanding Agency practice. Even where responding to public comments delays promulgation more than 90 days, or more than 6 months, after proposal, the applicability dates of new source performance standards are established as the date of proposal. See 40 CFR Part 60, Subparts D *et seq.*

Sierra Pacific argues that its position has been adopted by EPA in "analogous" circumstances under the Clean Water Act. This is inaccurate. Section 306 of the Clean Water Act specifically provides that the date of proposal of a new source standard is the applicability date only if the standard is promulgated within 120 days of proposal (section 306(a)(2), (b)(1)(B)).

Sierra Pacific suggests that utilities are "unfairly prejudiced" by the applicability date, but does not submit any information to support this claim. In any event, there does not seem to be any substantial unfair prejudice. At the time of proposal, the Administrator had not decided whether a full or partial control alternative should be adopted in the final $SO_2$ standard. As a result, the Administrator proposed the full control alternative stating (43 FR 42154, center column):

* * * the Clean Air Act provides that new source performance standards apply from the date they are proposed and it would be easier for power plants that start construction during the proposal period to scale down to partial control than to scale up to full control should the final standard differ from the proposal.

In fact, the final $SO_2$ standard was less stringent than the proposed rule.

In this case, utilities were on notice on September 19, 1978, of the proposed form of the standard, and that the standard would apply to facilities constructed after that date. In March 1979, it became clear to the Agency that it would not be possible to respond to all the public comments and promulgate the final standards by March 19, as required by the consent decree in *Sierra Club* v. *Costle*, a suit brought to compel promulgation of the standard. (The comment period had only closed on January 15; EPA had received over 625 comment letters, totalling about 6,000 pages, and the record amounted to over 21,000 pages.) The Agency promptly contacted the other parties to *Sierra Club* v. *Costle*, and all the parties jointly filed a stipulation that the standard should be signed by June 1 and that the Administrator should not seek "any further extensions of time." This stipulation was well-publicized (see, for example, 9 Environment Reporter Current Developments 2246, March 30, 1979). Thus utilities such as Sierra Pacific had reasonable assurance that the standard would be signed by June 1, as it was.

Even assuming, as Sierra Pacific does, that section 111 required the standard to be promulgated by March 19, utilities had to wait only an additional period of 84 days to know the precise form of the promulgated standard. This delay is not substantial in light of the long lead times required to build a utility boiler, and in light of the fact that the pollution control techniques required to comply with the promulgated standard are substantially

[2] In any event in the Administrator's view the 90-day requirement in section 111(b)(1)(B) no longer governs the promulgation or revision of new source standards. It has been replaced by procedures set forth in section 111(f) enacted by the 1977 amendments

**Enforcement Policy for Sulphur Dioxide Emission Limitations in Ohio**

The United States Environmental Protection Agency is announcing a policy concerning sulfur dioxide emission limitations in Ohio. This policy amends those previously announced on February 15, 1978 (43 FR 6646) and August 22, 1979 (44 FR 49296).

The promulgated sulfur dioxide implementation plan requires subject sources to achieve specified emission limitations and demonstrate compliance using test methods specified in 40 CFR Part 60. U.S. EPA has initiated a review of its policies and procedures for regulating sulfur dioxide emissions from coal-fired plants and has addressed the question of sulfur variabilitv in that context. As part of this review, U.S. EPA has announced intention to propose policy and regulatory changes which would permit states to analyze the air quality impact of variable sulfur emissions in their attainment demonstrations. Since changes to the rules and policies are required for the new evaluation technicuqe, a final determination on the acceptability can only be made after public comments on the policies are reviewed and final decisions are published.

In the interim, while the sulfur variability issue is under review, the Agency will focus its enforcement resources on those plants which present the greatest environmental threat. While the State of Ohio is re-evaluating the emission limitations in a manner consistent with U.S. EPA's proposed policy and is proceeding with a coal washing program for high sulfur coal, U.S. EPA will give enforcement priority to those plants in Ohio which fail to meet certain conditions which are listed below. This policy will, in effect, mean for the next year that U.S. EPA will not initiate $SO_2$ enforcement actions in Ohio against sources which satisfy the following conditions:

(a) The source is meeting the currently applicable, promulated $SO_2$ emission limits applied as a 30-day rolling, weighted average.

(b) The source obtains daily information on $SO_2$ emissions through use of in-stack monitors or fuel sampling and analysis techniques as set forth in 40 CFR Part 60 and makes this information available to the State and the U.S. EPA upon request.

(c) The emissions of $SO_2$ in any one day do not exceed 1.5 times the emission limit in the currently applicable SIP.

Any source failing to meet all these conditions will be subject to enforcement of the regulations as originally promulgated.

Dated: February 5, 1980

John McGuire,

*Regional Administator, Region V.*

[FR Doc 80-4290 Filed 2-8-80 8 45 am]

BILLING CODE 6560-01-M

## Regulation of Large Coal-Fired Boilers for $SO_2$ Emissions

**AGENCY:** U.S. Environmental Protection Agency

**ACTION:** Notice.

**SUMMARY:** The purposes of this Notice is to advise the public that EPA has initiated a review of policies and procedures for regulating large coal-fired boilers and to invite comment on the results of that review. Included are preliminary positions on guidelines for meterological dispersion models; guidelines on regulatory development with emphasis on averaging times, the use of a statistical technique for evaluating variable emissions, and accelerated installation of in-stack monitors and their use in future SIP modifications as the required compliance method. Some of the anticipated changes will involve rulemaking; others will involve changes to procedural guidelines or policy announcements. There will be opportunity for public comments on each. Involvement by many interests is encouraged because of the potential impacts of these changes on acid precipitation, visibility, coal utilization and the cost of power production. This Notice is intended to provide an overview of the program since its implementation will require a number of separate administrative actions.

**BACKGROUND:** The United States Environmental Protection Agency has initiated a program to revise the rules and policies applicable to controlling sulfur emissions from coal-fired power plants. Information developed over the past several years has made it increasingly apparent that historical methods of estimating impacts and establishing emission limits for power plants are not adequately defined and are not being applied consistently. In addition, current emission monitoring and enforcement techniques have been found to be cumbersome and ineffective.

The Clean Air Act provides for the establishment and attainment of ambient standards which will provide an equal measure of health and welfare protection to residents of every State. The standards for sulfur dioxide require that ambient concentrations, averaged annually and over 24 hour and 3 hour periods, not exceed specified levels. Assuring attainment of the standards in the vicinity of power requires an understanding of the ground level concentrations expected to result from the plant's emissions under the meterological conditions observed in the affected area. Estimates of ground level concentrations are developed through the use of mathematical dispersion models which predict concentrations associated with given emission rates and meterological conditions. These predictions are used to develop emission limitations which will protect against violations of the standard.

All mathematical simulations models, whether they are of industrial processes, economic systems or phyiscal events, contain estimates and assumptions which can only approximate real world conditions. Similarly, translation of information generated by models into management decisions or emission limits requires a series of policies and procedures to reduce the possibility of undesired consequences which might result from errors in predictions. In the development of emission limits for power plants, regulatory policies must provide for adequate protection of the ambient standards despite uncertainty in predicted air quality impacts.

A major area of inconsistency in the application of model results to power plant emission limits has been the treatment of natural variations in the sulfur content of coal. Coal, even from the same mine, will vary in sulfur content, from day to day. Sulfur dioxide emissions will vary with changes in sulfur content, making daily air quality impacts difficult to estimate. Sulfur varability was not well understood by either industry or the government when initial rules were developed by the States. As a result, it was generally ignored when most emissions limits were established. This has caused substantial problems in the interpretation and enforcement of existing rules as well as in the transition to the more explicit regulations now being required by the Agency.

Another problem area involves the development of emission limits which protect the standard given the fact that model results are only estimates and may either underpredict or overpredict actual concentrations. An underprediction could result in emission limits that do not provide the appropriate degree of assurance that ambient standards will be protected.

Over the past ten years ground level concentrations for $SO_2$ have been reduced in many areas and most of the remaining problems are associated with power plants and smelters which have not come into compliance with existing emission limits. The modifications being proposed by the Agency are necessary to insure that the remaining sources can be brought into compliance through effective enforcement; to provide a clear policy for evaluating new sources; and to resolve issues which are delaying the development of State rules for those sources requiring additional control.

While the current program has substantially reduced the problems of localized effects of sulfur oxides, there is a large and possibly more significant threat to the environmental posed by emissions of sulfur compounds to the atmosphere. Acid precipitation resulting from region-wide emissions of sulfur and nitrogen compounds threatens our lakes and forests and those of Canada. Since the Clean Air Act was designed to deal primarily with ground level concentrations in the vicinity of individual sources, it offers only limited tools to deal with broad regional problems such as acid rain.

A reduction in acid precipitation will require reductions in emissions over broad geographic regions. While there are a number of alternatives for accomplishing such a reduction, the most promising near-term measure appears to be increased cleaning of high sulfur coal, through coals washing techniques. A program to require coal cleaning of high sulfur coals has been advocated by one State (Ohio) and EPA believes that similar actions in other States would provide a real and significant benefit. Therefore, the policies to be proposed by the Agency will encourage States and sources to increase the use of washed coal. While the alternatives considered by the Agency in the review of policies and procedures for coal-fired boilers will move toward reductions in total emissions of sulfur oxides from current levels, they cannot be expected to reduce atmospheric loadings sufficiently to solve the acid precipitation problem. Significant reduction in regional emission of $SO_2$ will require legislative changes.

### Proposed Actions

The actions contemplated by the Agency include revisions to: (1) Enforcement programs, with emphasis on emission data and methods of determining compliance.

(2) Guidelines for dispersion modeling.

(3) Guidelines for developing emission limits for State Implementation Plans (SIPs) with emphasis on averaging times, variability in $SO_2$ emissions, and certainties in modeling estimates.

**ENFORCEMENT DATA:** Effective enforcement of regulations for sources with varying emissions, such as coal-fired boilers, depends strongly on the routine availability of emission data. On August 8, 1979, EPA published an Advance Notice of Proposed Rulemaking "Emission Monitoring of Stationary Sources" (40 CFR Parts 51 and 52, Vol. 44, No. 154). The schedule published for promulgating regulations requiring the installation of continuous in-stack monitors will be accelerated for coal-fired boilers and broadened to

include periodic coal sampling or more frequent stack sampling for some units in order to provide information necessary to ensure compliance with existing emission limits.

In addition, it is apparent that the manual stack test methods usually required in existing regulations generally do not provide adequate data for effective enforcement. Therefore, the Agency will propose a change to Part 51 of 40 CFR requiring that continuous in-stack monitoring or periodic coal sampling be the only acceptable compliance method for $SO_2$ in all future SIP modifications involving large coal-fired boilers.

**MODELING GUIDELINES:** Dispersion models are used to predict the ground level air quality impacts of power plant emissions. While the models used are consistent in basic design, their application requires a number of assumptions and variety of data about emissions, background concentrations and weather conditions. EPA proposed, took comment on and published in 1978 a report "Guidelines on Air Quality Models" (EPA-450/2/78-027) in order to provide formal guidance on the application of these models. However, this report provides substantial flexibility to the user. The Agency now proposes to tighten this guidance to establish specific data requirements. Included will be a requirement that five years of meteorological data be used to insure representativeness of results, a requirement that the plant be modeled at the load which would identify the highest ground level concentration, and more specific requirements for identifying critical receptor sites. The combination of these actions should improve the consistency and accuracy of model applications for future regulations.

**GUIDELINES FOR DEVELOPMENT OF EMISSION LIMITS:** There does now exist a formal set of guidelines for developing regulations from modeling data. This has been an important cause of inconsistency and possibly ambiguity in some existing SIP emission limits for coal-fired boilers. Therefore, a set of guidelines will be proposed early in 1980 to assist States and EPA Regions in setting emission limits.

The most difficult problem to be addressed will be the consideration of coal sulfur variability in the establishment of emission limits. In the past the Agency has advocated an assumption that emissions would be uniform at the maximum coal sulfur content and required that regulations be established to protect against maximum emissions under all weather conditions. A number of States and industries have requested that the Agency review this policy and consider an alternative of allowing longer (30 day) averaging times in emission limits. They argue that the term average better represents actual operating conditions and potential ambient impacts.

While the Agency agrees that coal sulfur variability cannot be ignored, it has been and continues to be unwilling to accept the 30-day average proposals as adequate to demonstrate protection of the ambient standards or as an appropriate form for insuring compliance. Accordingly, the Agency will propose for comment an alternative technique which uses statistical tools to analyze the probabilities of significant air quality impacts under conditions of varying emissions. When combined with appropriate meteorological data, continuous in-stack monitoring and emission limits specification, this technique appears to provide an appropriate mechanism to consider coal sulfur variability.

The statistical model will be proposed as a permissible alternative where the following conditions are met:

a. Five years of meteorological data are employed in the model and worst case load conditions are considered.

b. Compliance is determined through the use of in-stack monitors or daily coal samples.

c. Emission limits are specified at a minimum both for a 24 hour averaging period and a 30-day rolling averaging period.

d. High sulfur coal will be washed to reduce both sulfur content and variability, thereby reducing the potential for short-term exceedances.

The guidelines also will specify selection of an acceptable degree of certainty of attainment for use with the statistical technique and values for sulfur variability if plant-specific data are not available. Policies applicable to emission limits for coal-fired boilers in other situations also will be proposed. These will include smaller urban point sources and plants in complex terrain where only screening-type diffusion models are available for use.

The problem of uncertainty in model predictions also will be addressed and may lend itself to the application of a similar statistical technique. In this case statistical tools would be used to determine the probability that a model has underpredicted ground level concentrations for a given application and that as a result actual concentrations would exceed the standard. While more work has been done to date on the application of statistical techniques to sulfur variability, the Agency's review of modeling and regulatory policies will extend to the problem of possible underpredication and the proposal of appropriate corrective action.

It must be emphasized that this Notice is being published only as general information to illustrate the scope of the review and to present the Agency's rationale and initial conclusions in a comprehensive package. This Notice should not be interpreted as a license to implement any of the changes being discussed. Each will be proposed in a more formal manner, announced or proposed in the **Federal Register** with opportunity for comment and made final as a modification to the appropriate Agency policy, guidelines or regulation. Accordingly, this Notice does not affect EPA's November 7, 1979, proposal to approve emission limitations for two West Virginia power stations, where a statistical analysis of fuel variability was combined with an alternative set of more stringent conditions in determining that a violation of ambient air quality standards was not expected (44 FR 64439).

**Comments and Additional Information**

The series of possible changes to regulations, guidelines, and policies for evaluating coal-fired boilers outlined in this notice have the potential for widespread impact. These include effect of acid precipitation and on productivity of lakes and forests, visibility, impact of sulfates on public health, ability to utilize coal as an energy source, changes in patterns of coal supply and employment in the mining industry and cost of electricity. Because of this EPA will provide extensive opportunity for review and public comments as each segment of the overall program is proposed and moves toward final decision and implementation.

EPA also welcomes general comment at this time on the concepts and overall program described in this notice. Comments and suggestions should be sent to B. J. Steigerwald, Environmental Protection Agency (MD-10), Research Triangle Park, N.C. 27711. Phone (919) 541-5256.

Dated: February 5, 1980.

**Barbara Blum,**

*Administrator.*

federal register

Wednesday
February 20, 1980

## Part IV

# Environmental Protection Agency

**Draft Performance Specification 4—Specifications and Test Procedures for Carbon Monoxide Continuous Monitoring Systems in Stationary Sources**

ENVIRONMENTAL PROTECTION AGENCY

40 CFR Part 60

[FRL 1389-2]

## Standards of Performance for New Stationary Sources Continuous Monitoring Performance Specifications

**AGENCY:** Environmental Protection Agency (EPA).

**ACTION:** Advance notice of proposed rulemaking.

**SUMMARY:** This notice sets forth draft Performance Specification 4—Specifications and Test Procedures for Carbon Monoxide Continuous Monitoring Systems in Stationary Sources, which EPA is considering to propose as an addition to Appendix B of 40 CFR Part 60. The intent of this advance notice is to solicit comments on the specifications and testing procedures EPA is considering.

This advance notice of proposed rulemaking is issued under the authority of Sections 111, 114, and 301(a) of the Clean Air Act as amended (42 U.S.C. 7411, 7414, and 7601(a)).

**DATES:** Written comments and information should be post-marked on or before May 20, 1980.

**ADDRESSES:** *Comments.* Written comments and information should be submitted (in duplicate, if possible) to: Central Docket Section (A-130), Attention: Docket Number A-79-03, U.S. Environmental Protection Agency, 401 M Street, SW., Washington, D.C. 20460.

*Docket.* Docket Number A-79-03, containing material relevant to this rulemaking, is located in the U.S. Environmental Protection Agency Central Docket Section, Room 2903B, 401 M Street, SW., Washington, D.C. 20460. The docket may be inspected between 8:00 a.m. and 4:00 p.m. on weekdays, and a reasonable fee may be charged for copying.

**FOR FURTHER INFORMATION CONTACT:** Mr. Don Goodwin (MD-13), U.S. Environmental Protection Agency, Research Triangle Park, N.C. 27711, telephone (919) 541-5271.

**SUPPLEMENTARY INFORMATION:** EPA promulgated standards of performance for new stationary sources pursuant to Section 111 of the Clean Air Act, as amended, on March 8, 1974 (39 FR 9308), for petroleum refineries and six other stationary sources. New or modified sources in these categories are required to demonstrate compliance with the standards of performance by means of performance tests that are conducted at the time a new source commences operation or shortly thereafter. To ensure that these sources are properly operated and maintained so as to remain in compliance, provisions were included in the standards that require sources to install and operate a continuous emission monitoring system. One such requirement was for carbon monoxide (CO) from petroleum refineries.

When the standards were initially proposed, EPA had limited knowledge about the operation of continuous monitors on such sources; thus, the continuous emission monitoring requirements were specified in general terms. Additional guidance on the selection and use of such instruments was to be provided at a later date.

On October 6, 1975 (40 FR 46259), the Environmental Protection Agency amended Part 60 of the regulations by adding Appendix B—Performance Specifications 1, 2, and 3 for continuous monitoring of (1) opacity, (2) sulfur dioxide and nitrogen oxide, and (3) oxygen or carbon dioxide, respectively. Performance specifications for CO monitors were not published at that time.

EPA has conducted short-term evaluations of the applicability of several continuous monitoring instruments and has published the results in the following documents: *Guidelines for Development of a Quality Assurance program: Volume VIII—Determination of CO Emissions from Stationary Sources by NDIR Spectrometry*, EPA-650/4-74-005-h (February 1975); and *Evaluation of Continuous Monitors for Carbon Monoxide in Stationary Sources*, EPA-600/2-77-063) March 1977). Both are available through the National Technical Information Service, Springfield, Virginia 22161.

Based on the above documents, specifications and test procedures were drafted for continuous CO monitoring instruments. the format of the draft Performance Specification 4 follows closely that of the most recent proposed revisions to Performance Specification 2 (44 FR 58602 dated Oct. 10, 1979). Several references are made in Performance Specification 4 to specific sections of the Performance Specification 2 revisions.

The Environmental Monitoring and Support Laboratory of EPA is also presently conducting a laboratory and long-term field study of CO continuous monitoring systems. Results of this study will provide essential background and technical information in support of or improvement to Performance Specification 4. The completion date is scheduled for mid-1981. For this reason, Performance Specification 4 for CO is published as an advance notice.

### Specific Requests

EPA is requesting comments on the attached draft Performance Specification 4—Specifications and Test Procedures for CO Monitoring Systems in Stationary Sources. EPA is interested in comments on alternatives to the performance specifications and is particularly interested in information that could lead to the development of improved or alternative procedures. EPA is also interested in comments on the following aspects of CO continuous monitoring and Performance Specification 4: (1) Estimates of installation and operation costs including equipment costs, manpower requirements, data reduction options, and maintenance costs, (2) procedures applicable for the evaluation of single-pass, in-situ monitoring system; (3) laboratory testing procedures that are necessary for determining monitoring system performance acceptability and those laboratory tests that can be recommended as indications of the quality of equipment operation; (4) the specifications and limits set forth in Section 4; (5) the applicability of Reference Method 10 or other methods for determining relative accuracy of continuous CO monitoring systems.

Dated: February 12, 1980.

**Barbara Blum,**

*Acting Administrator.*

### Performance Specification 4—Specifications and Test Procedures for Carbon Monoxide Continuous Monitoring Systems in Stationary Sources

*1. Applicability and Principle*

1.1 Applicability. This specification contains (a) installation requirements, (b) instrument performance and equipment specifications, and (c) test procedures and data reduction procedures for evaluating the acceptability of carbon monoxide (CO) continuous monitoring systems. The test procedures are not applicable to single-pass, in-situ monitoring systems; these systems will be evaluated on a case-by-case basis upon application to the Administrator, and alternative procedures will be issued separately.

1.2 Principle. A CO continuous monitoring system that is expected to meet this specification is installed, calibrated, and operated for a specified length of time. During the specified time period, the continuous monitoring

system is evaluated to determine conformance with the specification.

*2. Definitions*

The definitions are the same as those listed in Section 2 of Performance Specification 2.

*3. Installation Specifications*

Install the continuous monitoring system at a location where the pollutant concentration measurements are representative of the total emissions from the affected facility. Use a point, points, or a path that represents the average concentration over the cross section. Both requirements can be met as follows:

3.1 Measurement Location. Select an accessible measurement location in the stack or ductwork that is at least two (2) equivalent diameters downstream from the nearest CO control device or other point at which a change in the pollutant concentration may occur and at least 0.5 equivalent diameter upstream from the exhaust. Individual subparts of the regulations may contain additional requirements.

3.2 Measurement Points or Paths. The tester may choose to use the following measurement point, points, or path without a stratification check or he may choose to conduct the stratification check procedure given in Section 3.3 of Performance Specification 2 to select the point, points, or path of average gas concentration.

3.2.1 CO Path Monitoring Systems. Same as in Performance Specification 2, Section 3.2.2.

3.2.3 Single-Point and Limited-Path Monitoring Systems. Same as in Performance Specification 2, Section 3.2.3.

*4. Performance and Equipment Specifications*

The continuous monitoring system performance and equipment specifications are listed in Table 4–1. To be considered acceptable, the continuous monitoring system must demonstrate compliance with these specifications using the test procedures of Section 6.

*5. Apparatus*

5.1 Continuous Monitoring System. Use any continuous monitoring system for CO, which is expected to meet the specifications in Table 4–1. The data recorder may be an analog strip-chart recorder or other suitable device with an input signal range compatible with the analyzer output.

**Table 4–1.**—*Continuous Monitoring System Performance and Equipment Specifications*

| Parameter | Specification |
|---|---|
| 1. Conditioning period [a] | ≥ 168 hours. |
| 2. Operational test period [a]. | ≥ 168 hours. |
| 3. Calibration error [b] | ≤ 5 percent of each mid-level and high-level calibration value. |
| 4. Response time | ≤ 10 minutes. |
| 5. Zero drift, 2 hours [a] | ≤ 1 percent of span value. |
| 6. Zero drift, 24 hours [a] | ≤ 2 percent of span value. |
| 7. Calibration drift, 2 hours [a]. | ≤ 2 percent of span value. |
| 8. Calibration drift, 24 hours [a]. | ≤ 2.5 percent of span value. |
| 9. Relative accuracy [a] | ≤ 10 percent of Mean Ref. value. |
| 10. Calibration gas cells or filters. | Must provide a check of all analyzer internal mirrors and lenses, and all electronic circuitry including the radiation source and detector assembly, which are normally used in sampling and analysis. |
| 11. Data recorder chart resolution. | Chart scales must be readable to within ± 0.5 percent of full-scale. |

[a] During the conditioning and operational test periods, the continuous monitoring system shall not require any corrective maintenance, replacement, or adjustment other than that clearly specified as routine and required in the operation and maintenance manuals

[b] Expressed as sum of absolute mean value plus 95 percent confidence interval of a series tests divided by a reference value.

5.2 Calibration Gases. For continuous monitoring systems that allow the introduction of calibration gases to the analyzer, the calibration gases must be CO in $N_2$. Use three calibration gas mixtures as specified below;

5.2.1 High-Level Gas. A gas concentration that is equivalent to 80 to 90 percent of the span value.

5.2.2 Mid-Level Gas. A gas concentration that is equivalent to 45 to 55 percent of the span value.

5.2.3 Zero Gas. A gas concentration of less than 0.25 percent of the span value. Prepurified nitrogen should be used.

5.3 Calibration Gas Cells or Filters. For continuous monitoring systems which use calibration gas cells or filters, use three certified calibration gas cells or filters as specified below:

5.3.1 High-Level Gas Cell or Filter. One that produces an output equivalent to 80 to 90 percent of the span value.

5.3.2 Mid-Level Gas Cell or Filter. One that produces an output equivalent to 45 to 55 percent of the span value.

5.3.3 Zero Gas Cell or Filter. One that produces an output equivalent to zero. Alternatively, an analyser may produce a zero value check by mechanical means, such as a movable mirror.

*6. Performance Specification Test Procedures*

6.1 Pretest Preparation.

6.1.1 Calibration Gas Analyses. Use calibration gas prepared according to the protocol defined in Reference 10.2.

6.1.2 Calibration Gas Cell or Filter Certification. Obtain from the manufacturer a statement certifying that the calibration gas cells or filters (zero, mid-level, and high-level) will produce the stated instrument response for the continuous monitoring system, and a description delineating the test procedure and equipment used to calibrate the cells or filters. At a minimum, the manufacturer must have calibrated the gas cells or filters against a simulated source of known concentration.

6.2 Continuous Monitoring System Preparation.

6.2.1 Installation. Install the continuous monitoring system according to the measurement location procedures outlined in Section 3 of this specification. Prepare the system for operation according to the manufacturer's written instructions.

6.2.2 Conditioning Period. Follow the procedure in Performance specification 2, Section 6.2.

6.3 Operational Test Period. Follow the procedure in Performance Specification 2, Section 6.3 and the following subsections:

6.3.1 Calibration Error Determination. Follow the procedures in Performance Specification 2, Section 6.3.1.

6.3.2 Response Time Test Procedure. Follow the procedures in Performance Specification 2, Section 6.3.2.

6.3.3 Field Test for Zero Drift and Calibration Drift. Follow the procedures in Performance specification 2, Section 6.3.3.

6.4 System Relative Accuracy. Follow the procedures in Performance Specification 2, Section 6.4 and all the accompanying subsections. The reference method is Reference Method 10.

6.5 Data Summary for Relative Accuracy Tests. Follow the procedures in Performance Specification 2, Section 6.5.

*7. Equations and Reporting*

Follow the procedures in Performance Specification 2, Section 7 and all the accompanying subsections.

*8. Reporting*

Follow the procedures in Performance Specification 2, Section 8.

*9. Retest*

Follow the procedures in Performance Specification 2, Section 9.

10. *Bibliography*

10.1 Repp, Mark. Evaluation of Continuous Monitors for Carbon Monoxide in Stationary Sources. U.S. Environmental Protection Agency. Research Triangle park, NC. Publication No. EPA-600/2-77-063. March 1977.

10.2 Traceability Protocol for Establishing True Concentrations of Gases Used for Calibration and Audits of Continuous Source Emission Monitors (Protocol No. 1). June 15, 1978. Environmental Monitoring and Support Laboratory, Office of Research Development, U.S. Environmental Protection Agency. Research Triangle Park, NC 27711.

10.3 Department of Commerce. Experimental Statistics. Handbook 91. Library of Congress No. 63-60072. U.S. Government Printing Office, Washington, DC.

[FR Doc. 80-6289 Filed 2-19-80; 8:45 am]

BILLING CODE 6560-01-M

[FRL 1507-4; EPA 5-A-80-8A]

**Amended Permit Determination to Indianapolis Power & Light, Patriot, Ind.**

In the matter of the proceedings under Title 1, Part C of the Clean Air Act (Act), as amended, 42 U.S.C. 7401 *et seq.*, and the Federal regulations promulgated thereunder at 40 CFR 52.21 (43 FR 26388, June 19, 1978) for Prevention of Significant Deterioration of Air Quality (PSD), relating to Indianapolis Power & Light Company (IPL).

On March 29, 1977, IPL submitted an application to the United States Environmental Protection Agency (U.S. EPA), Region V office, for an approval to construct the Patriot (formerly Mexico Bottom) Generating Station near Patriot, Indiana. The application was submitted pursuant to the regulations for PSD and was considered complete as of October 3, 1977. In this application, IPL projected its commencement of construction dates as follows: Unit 1—April 1981, Unit 2—April 1983 and Unit 3—April 1985.

U.S. EPA's subsequent denial of permission to construct on August 7, 1978 was ultimately reviewed by the United States Court of Appeals for the Seventh Circuit. The Court ordered U.S. EPA to review new data received from the Company and rule on the ability of the pollution control equipment proposed by the Company to meet the applicable emission limitations. Such a review was subsequently conducted by U.S. EPA and a preliminary approval was granted on August 23, 1979.

On September 20, 1979, U.S. EPA published notice of its preliminary decision in the *Vevay Reveille-Enterprise* and *Kentucky Post*, which also stated that all materials on which U.S. EPA has based its preliminary approval were available for inspection at the Switzerland County Library. This included IPL's March 29, 1977 application, which, in turn, contained the Company's projected construction dates. A public hearing on U.S. EPA's proposed action was held on October 18, 1979 in Vevay, Indiana. Although many comments were received by U.S. EPA during the public comment period and at the hearing, no issues were raised with regard to IPL's projected dates.

On December 14, 1979, after review and analysis of all materials submitted by IPL, the public record established at the hearing and written comments, U.S. EPA determined that the proposed new construction in Switzerland County, Indiana would be utilizing the best available control technology and that emissions from the proposed facility would not violate applicable air quailty increments of standards as required by Section 165 of the Act. As one of the conditions imposed on IPL in the permit, U.S. EPA stated that construction on the three units would have to be commenced as follows: Unit 1—by June 1981, Unit 2—by December 1982 and Unit 3—by June 1984. On January 10, 1980, U.S. EPA's final determination was published in the **Federal Register**, 45 FR 2095.

On March 4, 1980, IPL wrote a letter to U.S. EPA, Region V, objecting to the commencement of construction dates set forth in the permit. In this letter, IPL cited 40 CFR 52.21(s)(2) (June 19, 1978), which provides as follows:

> (2) Approval to construct shall become invalid if construction is not commenced within 18 months after receipt of such approval, if construction is discontinued for a period of 18 months or more, or if construction is not completed within a reasonable time. The Administrator may extend the 18-month period upon a satisfactory showing that an extension is justified. This provision does not apply to the time period between construction of the approved phases of a phased construction project; each phase must commence construction within 18 months of the projected and approved commencement date.

In light of this regulatory language, IPL maintained that construction on the three proposed units need not commence until the following dates: Unit 1—by October 1982, Unit 2—by October 1984 and Unit 3—by October 1986. These dates are eighteen (18) months from the projected dates in IPL's original application.

As a result of 40 CFR 52.21(s)(2) (June 19, 1978), U.S. EPA has determined that the proposed units need not commence construction until the following dates: Unit 1—by June 1981, Unit 2—by October, 1984 and Unit 3—by October 1986. These dates thus incorporate the 18 month extension period permitted by the regulations. Other than this provision and a miner change in the reference to the recent judicial decision of *Alabama Power Co.* v. *Douglas M. Costle*, 13 ERC 1225 (D.C. Cir. 1979), no other modifications in the December 14, 1979 permit have been made. This includes U.S. EPA's reservation of its right to require more stringent Best Available Control Technology (BACT) at a future date for all unconstructed units at that date; if BACT has advanced from the control strategy imposed by the approval.

This approval to construct does not relieve IPL of the responsibility to comply with the control strategy and all local, State and Federal regulations which are part of the applicable State Implementation Plan, as well as all other applicable Federal, State and local requirements.

This determination may now be considered final agency action which is locally appealable under Section 307(b)(1) of the Act. A petition for review may therefore be filed in the U.S. Court of Appeals of the Seventh Circuit by any appropriate party in accordance with Section 307(b)(1). Petitions for review must be filed sixty (60) days from the date of this notice.

For further information, contact Eric Cohen, Chief, Compliance Section, Region V, U.S. EPA, 230 South Dearborn Street, Chicago, Illinois 60604. (312) 353-2111.

Dated: May 21, 1980.

**John McGuire,**

*Regional Administrator.*

**Region V.—Approval to Construct**

[EPA-5-A-80-8A]

*Authority*

In the Matter of Indianapolis Power & Light Company (IPL) Patriot, Indiana; proceeding pursuant to the Clean Air Act, as amended.

1. The approval to construct is issued pursuant to the Clean Air Act, as amended, 42 U.S.C. 7401 *et seq.*, (the Act), and the Federal regulations promulgated thereunder at 40 CFR 52.21 (43 F.R. 26388, June 19, 1978) for the Prevention of Significant Deterioration of Air Quality (PSD). This is an amendment of the original approval to construct the Patriot Generating Station issued on December 14, 1979. (EPA-5-A-80-A).

*Findings*

2. The Indianapolis Power and Light Company (IPL) proposes to construct the Patriot (formerly Mexico Bottom) Generating Station consisting of three 650 MW coal-fired boilers near Patriot, in Switzerland County, Indiana. The site and impact area are designated Class II pursuant to Section 162 of the Act. Switzerland County has been designated attainment for all criteria pollutants pursuant to Section 107 of the Act (43 F.R. 8982, March 3, 1978).

3. IPL submitted application information, which U.S. EPA deemed complete on October 3, 1977. U.S. EPA issued preliminary approval on February 3, 1978, and a public hearing was held on April 20, 1978. Based on information presented at the hearing and in public comments, U.S. EPA disapproved construction of the plant on August 7, 1978. IPL appealed the denial. On May 21, 1979, the U.S. Court of Appeals for the Seventh Circuit remanded the matter to the U.S. EPA for decision of the air quality issue on the basis of the record established as of August 7, 1978 and for further proceedings on the matter of the scrubber design.

4. On July 13, and July 30, 1979, IPL supplemented its application with scrubber design information, pursuant to the court order.

5. On August 23, 1979, U.S. EPA granted preliminary approval of the proposed construction.

6. A public notice soliciting comments on the preliminary approval and offering the opportunity for a hearing was published by U.S. EPA on September 20, 1979, in the *Kentucky Post* and the *Vevay Reveille-Enterprise*.

7. On October 18, 1979, a hearing was held in the Switzerland County Court House for the purpose of gathering public comments on the preliminary approval of the Patriot Generating Station by U.S. EPA.

8. The comment period established by the notices of September 20, 1979, was open for receipt of written comment until October 25, 1979.

9. IPL was given the opportunity to respond to the public comment record and submitted their response to U.S. EPA on November 13, 1979.

10. The boilers at the Patriot Generating Station are subject to the requirements of 40 CFR Part 60, Subpart Da, Standards of Performance for Electric Utility Steam Generating Units (44 F.R. 33580, June 11, 1979).

11. After review and analysis of the materials on air quality in the record as of August 7, 1978, the scrubber design information submitted by IPL, the comments submitted in writing and at the public hearing and IPL's response to the public comment record, U.S. EPA finds that best available control technology will be employed at the Patriot Generating Station and the PSD increments and the National Ambient Air Quality Standards will not be violated.

*Conditions*

12. Particulate emissions from the boiler exhaust gases shall not exceed 0.03 lb./million BTU heat input.

13. Boiler exhaust gases shall not exhibit an opacity greater than 20 percent (6-minute average) except for one 6-minute period per hour of not more than 27 percent.

14. Nitrogen oxide emissions from the boiler exhaust gases shall not exceed 0.6 lb./million BTU heat input.

Conditions 12 through 14 represent applications of the best available control technology (BACT) as required by Section 165 of the Act.

15. Sulfur dioxide emissions from the boiler exhaust gases shall not exceed 0.55 lb./million BTU heat input.

16. The sulfur dioxide scrubber system shall be maintained at a minimum removal efficiency of 91 percent.

Conditions 15 through 16 are necessary to ensure that the Class II increments for sulfur dioxide are not exceeded. These conditions also satisfy the requirements for application of BACT to sulfur dioxide emissions.

17. Continuous emissions monitoring systems shall be installed, calibrated, operated and maintained in accordance with 40 CFR 60.47a for the following:

(a) opacity
(b) sulfur dioxide (inlet and exit)
(c) nitrogen oxides
(d) oxygen or carbon dioxide

The monitoring data and heat input for the reporting period shall be submitted to the Chief, Compliance Section, U.S. EPA in accordance with the provisions of 40 CFR 60.7.

18. A continuous ambient air monitoring network shall be installed, calibrated, operated, and maintained for the measurement of:

(a) wind speed
(b) wind direction
(c) ambient air temperature
(d) total suspended particulate
(e) sulfur dioxide

The monitoring shall be designed and sited in accordance with U.S. EPA monitoring guidelines and with the final design and operating procedures subject to review and approval by U.S. EPA.

This monitoring shall begin at least one year prior to the start-up of the first generating unit and shall continue for the life of the station or until U.S. EPA informs IPL that it may cease. The data shall be reported quarterly to the Chief, Compliance Section, U.S. EPA. The data to be reported is specified in AEROS Users Manual (EPA-450/2-76-029, OAQPS No. 1.2-039) and is to be coded onto the SAROAD Air Quality Data forms or on magnetic tape in SAROAD format.

19. IPL shall submit to U.S. EPA 30 days prior to initial start-up of the first boiler, a copy of detailed operation, maintenance and staff training procedures for air pollution control equipment.

20. No air pollution control equipment design parameters, boiler operating parameters, physical and dynamic stack parameters, or building parameters may be changed without prior written authorization of U.S. EPA. However, U.S. EPA reserves the right to require more stringent BACT at a future date for all unconstructed units at that date, if BACT has been advanced from the control stategy imposed by this approval.

Conditions 17 through 20 are necessary to ensure that on a continual and permanent basis, emissions from the Patriot Generating Station do not violate the Class II increments for particulate and sulfur dioxide and the emissions standards established in conditions 12 through 15.

21. To ensure that best available control technology is being implemented to minimize fugitive particulate emissions:

(a) Particulate emissions from coal unloading shall not exceed 10 percent opacity for the duration of the unloading operation.

(b) All coal conveyors except the belt conveyor along the stacker reclaimer track shall be completely enclosed.

(c) All transfer points shall be completely enclosed. This does not include transfer from the stack reclaimer to the stack out pile, barge unloader, and the belts along the stacker reclaimer track.

(d) Emissions from all transfer houses, surge bins, and storage silos shall be controlled by dust collectors.

(e) The coal piles shall be sprayed with a surfactant on a regular basis as needed to minimize fugitive dust.

(f) The bottom ash will be sluiced, dewatered, and sent to a solid waste processing area.

(g) The dry ash from the electrostatic precipitators will be pneumatically conveyed to a pair of fly ash storage silos with dust collectors. From the silos, the fly ash will be conveyed to the solid waste processing area.

*Approval*

22. Approval to construct the Patriot Generating Station is hereby granted to the Indianapolis Power and Light

Company subject to the conditions expressed herein and consistent with the materials and data filed by the Company. Any departure from the conditions of this approval or the terms expressed in the data filed by the Company, must receive the prior written authorization of U.S. EPA.

23. The United States Court of Appeals for the D.C. Circuit has issued a ruling in the case of *Alabama Power Co.* vs. *Douglas M. Costle* (78-1006 and consolidated cases) which has significant impact on the U.S. EPA prevention of significant deterioration (PSD) program and approvals issued thereunder.

It is possible that the decision will require modification of the PSD regulations and could affect approvals issued under the existing programs. Examples of potential impact areas include the scope of best available control technology (BACT), source applicability, the amount of increment available (baseline definition), and the extent of preconstruction monitoring that a source may be required to perform. The applicant is hereby advised that this approval may be subject to reevaluation as a result of the court decision.

24. This approval is effective immediately. This approval to construct shall become invalid if construction of Unit #1 is not commenced by June 14, 1981. The following construction guidelines shall be considered the projected and approved construction commencements dates pursuant to 40 CFR 52.21(s)(2). Construction of Unit #2 must commence with 18 months of April 1, 1983. Construction of Unit #3 must commence with 18 months of April 1, 1985. The Administrator may extend the time period for the construction of Unit #1 only upon a satisfactory showing that an extension is justified. Notification shall be made to U.S. EPA of the commencement of construction of each unit 5 days after construction is commenced.

25. This approval does not relieve IPL of the responsibility to comply with the control strategy and all local, State and Federal regulations which are part of the applicable Implementation Plan, as well as all other applicable Federal, State and local requirements.

26. A copy of this approval has been forwarded to the Switzerland County Public Library, Ferry Street, Vevay, Indiana.

Dated: April 15, 1980.

John McGuire,

*Regional Administrator.*

[FR Doc. 80-16901 Filed 6-3-80; 8:45 am]

BILLING CODE 6560-01-M

40 CFR Part 52

[FRL 1514-8]

## Approval and Promulgation of Implementation Plans; Utah $SO_2$ Control Strategy

**AGENCY:** Environmental Protection Agency.

**ACTION:** Proposed rule.

**SUMMARY:** This notice proposes to reinstate the EPA sulfur dioxide ($SO_2$) emission limitation (6030 pounds per hour) and proposes to amend the fugitive emissions requirements, compliance schedules and emissions testing requirements applicable to the Kennecott Copper Corporation smelter in Utah. The proposed action would establish a final compliance date not later than December 31, 1982, and provide the smelter the opportunity to demonstrate its eligibility for a primary nonferrous smelter order.

**DATE:** Written comments on the proposed action should be submitted on or before July 14, 1980.

**ADDRESSES:** Submit written comments, preferably in triplicate, to: Office of Regional Counsel, Environmental Protection Agency, Region VIII, Suite 900, 1860 Lincoln Street, Denver, Colorado 80295.

Availability of supporting information A docket (No. 8A-78-1) containing

considerably greater than the 24-hour primary national standard of 365 $\mu g/m^3$ were estimated. However, as indicated in the technical support document EPA's current $SO_2$ emission limitation of 6030 pounds per hour, which was based on diffusion modeling for the smelter prior to its modification, is necessary to attain and maintain the 24-hour standard. Since the 1200-foot stack installed by Kennecott to replace the two 400-foot stacks previously used at the smelter does not result in an increase in allowable emissions for the area of maximum predicted ambient impact at Lake Point, EPA has determined that the new stack does not permit the use of dispersion enhancement in place of constant emission controls. Therefore, EPA is not undertaking a formal evaluation to determine if the new stack represents Good Engineering Practices under Section 123 of the Act. Consequently, EPA is withdrawing the 3700 pounds per hour $SO_2$ emission limitation proposal of 1978 and proposing to reinstate the emission limitation promulgated in 1975. In addition, EPA is proposing to amend the fugitive $SO_2$ emissions requirements for best engineering techniques to insure that all of the fugitive capture equipment currently installed at the smelter is operated and maintained properly. The proposed regulation describes these engineering techniques (primary and secondary hoods, vents, fans, ductwork, etc.) and requires Kennecott to submit to EPA a plan for their operation and maintenance.

EPA's November 26, 1975, $SO_2$ regulations set July 31, 1977, as the time for achievement of final compliance. Before July 31, 1977, however, EPA stipulated in connection with pending litigation that it intended to promulgate additional $SO_2$ regulations which might allow the use of a Supplementary Control System (SCS) and that, therefore, it would not enforce the existing $SO_2$ regulations during the interim.

As noted above, The Clean Air Act amendments of 1977 required SIP emission limitations to be achieved through the use of constant controls, but would permit a smelter which obtained an NSO under Section 119 to use SCS on an interim basis before achieving final compliance with its $SO_2$ emission limitations.

In light of these events, EPA has not enforced the November 26, 1975, $SO_2$ regulations. Since EPA has in effect tolled the compliance requirement before the date by which compliance was required in anticipation of the possible use of SCS, the agency believes that it is consistent with the intent of Congress in enacting Section 119 to amend the compliance date by the amount of time necessary after the promulgation of regulations under Section 119 to install the required control equipment. Accordingly, today's proposal would require Kennecott to meet its emission limitation as expeditiously as possible after the effective date of the NSO regulations. Since that date is imminent, EPA believes it can now propose an outside date for final compliance, and that such date should be no later than December 31, 1982. EPA chose the date December 31, 1982, because it believes that the expeditious installation and operation of the expected control equipment necessary to meet the emission limit proposed today can be accomplished by that date.

Finally, EPA is proposing to clarify the emission testing requirements applicable to the smelter. The proposed amendments, which are necessary to avoid potential misinterpretation of the current provisions, specify more clearly the continuous emission monitoring and stack testing criteria for determining compliance with the emission limitation, as well as the applicability of the two methods. Because of prior misunderstanding, the revised provisions include a specification for the normal smelter operating rate during manual testing. Recent EPA policies to apply more adequate quality assurance specifications for the emission monitoring equipment have also been included.

The technical support document containing the revised diffusion modeling and the basis for withdrawal of the proposed 3700 pound per hour emission limitation is included in the rulemaking docket.

Interested persons may participate in this rulemaking by submitting written comments, preferably in triplicate, to the Office of Regional Counsel, Environmental Protection Agency, Region VIII, Suite 900, 1860 Lincoln Street, Denver, Colorado 80295. Public comments received by July 14, 1980 will be considered in developing the final rule. All comments will be available in the docket for public inspection.

EPA is also providing the opportunity for interested citizens to request a public hearing. Requests for a public hearing must be in writing and directed to U.S. EPA, Region VIII, Office of Regional Counsel, 1860 Lincoln Street, Denver, Colorado 80295. If there is sufficient interest, a public hearing will be scheduled. Requests for a hearing must be received by July 14, 1980.

**Subpart TT—Utah**

Section 52.2325, paragraphs (c) and (d) are revised to read as follows:

**§ 52.2325 Control strategy: Sulfur oxides.**

* * * * *

(c) *Regulation for control of fugitive sulfur oxides emissions (Wasatch Front Intrastate Region).* (1) The owner or operator of the Kennecott Copper Corporation smelter located in Salt Lake County, Utah, in the Wasatch Front Intrastate Region shall utilize best engineering techniques for reducing escape of pollutants to the atomosphere and to capture sulfur oxides emissions and vent them through a stack or stacks. Such techniques shall include, but not be limited to:

(i) Installing and operating primary hoods and slag and matte tapping port hoods on each active reactor;

(ii) Installing and operating primary and secondary hoods on each active convertor;

(iii) Installing and operating vents, fans, and ductwork in the ceiling above ach reactor and convertor aisle to capture emissions in the general building air;

(iv) Maintaining and operating to deisgn specifications, and in continuous and full use when the respective process unit(s) is (are) in operation, all mechanical parts, including but not limited to hoods, doors, dampers, fans, and their controls;

(v) Maintaining all ducts, flues, and stacks in a leakfree condition;

(vi) Maintaining all reactors and converters under normal operating conditions in such a fashion that out leakage of gases to the air will be prevented to the maximum extent possible;

(vii) Wherever possible, ducting emissions through the tallest stack or stacks serving the facility;

(viii) Wherever possible, passing the effluent from all hooding and ceiling vents through the tallest stack or stacks serving the facility; and

(ix) Minimizing exhaust of pollutants directly from any building opening.

(2) The owner or operator of the Kennecott Copper Corporation smelter shall, within sixty (60) days of the date of promulgation of this regulation, submit to the Director, Enforcement Division, Environmental Protection Agency (EPA), Region VIII, a plan for achieving and maintaining the best engineering techniques required in paragraph (c)(1) of this section. Such plan shall include as a minimum:

(i) Operation and maintenance specifications for the techniques listed in paragraph (c)(1) and for any building evacuation system not vented to a stack;

(ii) Analysis of best engineering techniques for capturing sulfur exides emissions at the feed end of each reactor;

(iii) Detailed plans and compliance schedules to achieve the best engineering techniques.

(3) Within ninety (90) days of receipt of the plan required in paragraph (c)(2) of this section, EPA, Region VIII, will evaluate it for effectiveness in reducing $SO_2$ emissions;

(i) If EPA finds that the plan is adequate, the approved plan, its requirements, and any compliance schedules therein, shall become a part of this regulation by incorporation;

(ii) If the plan is determined to be inadequate, EPA will provide notice to the smelter owner or operator and will promulgate a substitute plan within 120 days of such notice. Any such promulgated plan will be incorporated as a requirement of this regulation.

(4) Actions implemented by the smelter owner or operator under the plan developed under section (c)(2) (or promulgated under Section (c)(3)) of this section shall be reported monthly to the Director, Enforcement Division, EPA, Region VIII. Such report shall include, but not be limited to, the date and number of hours any of the fugitive collection and control devices were not operational and any actions taken to correct such problems and avoid their recurrence.

(d) *Regulation for control of sulfur oxides emissions (Wasatch Front Intrastate Region).* (1) The owner or operator of the Kennecott Copper Corporation smelter located in Salt Lake County, Utah, in the Wasatch Front Intrastate Region shall not discharge or cause the discharge of sulfur dioxide into the atmosphere in excess of 6030 pounds per hour (2735 kg/hr), maximum six-hour average as determined by either of the methods specified in subparagraph (4) of this paragraph. Such limitation shall apply to the main smelter stack which vents sulfur dioxide emissions from the smelter premises, but not including fugitive emissions not capable of capture by best engineering techniques. Sulfur trioxide and sulfuric acid mist are not to be counted against the sulfur dioxide emission limitation.

(2)(i) The owner or operator of the smelter subject to this paragraph shall, no later than thirty (30) days following the effective date of this paragraph, submit to the Administrator for approval a proposed compliance schedule that demonstrates compliance with paragraph (d)(1) of this section as expeditiously as practicable, but not later than December 31, 1982.

(ii) The compliance schedule submitted to the Administrator pursuant to paragraph (d)(2)(i) of this section shall provide for increments of progress toward compliance. The dates for achievement of such increments of progress shall be specified. Increments of progress and dates for achievement shall include, but not be limited to, the following:

(*a*) No later than two (2) months following the effective date of this paragraph—Submit a final control plan to the Administrator for meeting the requirements of paragraph (d)(1) of this section;

(*b*) No later than four (4) months following the effective date of this paragraph—Let necessary contracts or issue purchase orders for process and/or control equipment to be used to accomplish the required emission control;

(*c*) No later than six (6) months following the effective date of this paragraph—Initiate on-site construction or installation of emission control equipment and/or process modification;

(*d*) No later than November 30, 1982—Complete on-site construction or installation of emission control equipment and/or proces modification;

(*e*) No later than December 31, 1982—Achieve and demonstrate full compliance with the requirements of paragraph (d)(1) of this section.

(iii) The owner or operator of the smelter subject to the requirements of this paragraph shall certify to the Administrator within five (5) days after the deadline for each increment of progress, whether or not the required increment of progress has been met.

(iv) Notice must be given to the Administrator at least sixty (60) days prior to conducting a performance test to afford him the opportunity to have observers present.

(v) A written report of the results of such performance evaluation test(s) shall be furnished to the Administrator within 30 days of the commencement of such test(s).

(vi) If the smelter subject to this paragraph is currently in compliance with the requirements of paragraph (d)(1) of this section, the owner or operator of such smelter shall certify such compliance to the Administrator within thirty (30) days of the effective date of this paragraph. The Administrator may request whatever supporting information or demonstration of compliance he considers necessary to determine the validity of the certification.

(vii) Within thirty (30) days of the effective date of this paragraph, the owner or operator of any smelter subject to this paragraph may submit to the Administrator for approval a proposed alternative compliance schedule. Each such proposed compliance schedule shall demonstrate compliance with paragraph (d)(1) of this section as expeditiously as practicable. No such compliance schedule may provide for final compliance after December 31, 1982. If approved by the Administrator, such schedule shall replace the compliance schedule set forth in paragraph (d)(2)(ii) of this section.

(viii) Any compliance schedule submitted to the Administrator pursuant to paragraph (d)(2)(vii) of this section shall provide for increments of progress toward compliance. The dates for achievement of such increments of progress shall be specified. Increments of progress shall include, but not be limited to, the increment specified in paragraph (d)(2)(ii) of this section.

(d)(1) The owner or operator of any smelter to which this paragraph is applicable shall install, calibrate, maintain, and operate a measurement system(s) for continuously monitoring sulfur dioxide emissions and stack gas volumetric flow rates in the main smelter stack and in the outlet of each sulfur dioxide control facility. For the purpose of this paragraph, "continuous emission monitoring" means the taking and recording of at least one measurement of sulfur dioxide concentration and gas flow rate from the affected stack and the outlet of each sulfur dioxide control facility in each 15-minute period.

(ii) Within nine (9) months after the effective date of this paragraph, and at such other times in the future as the Administrator may specify, the sulfur dioxide concentration measurement system(s) installed and used pursuant to this paragraph shall be demonstrated to meet the measurement system performance specifications prescribed in Appendix D to this Part, as amended, or as amended in subparagraph (4) below. The system shall be evaluated in units of the standard. Accuracy should be evaluated by conducting at least 3 two-hour manual type reference method tests for $SO_2$ and velocity during each of three sequential 9-hour test periods and calculated as prescribed in Appendices D and E, as amended, of this part.

(iii) Within nine (9) months after the effective date of this paragraph, and at such other times in the future as the Administrator may specify, the stack gas volumetric flow rate measurement system(s) installed and used pursuant to this paragraph shall be demonstrated to meet the measurement system performance specifications prescribed in Appendix E to this Part, as amended, or as amended in subparagraph (4) below.

(iv) On-site analysis, results calculation, and preliminary results of $SO_2$ emission tests during all monitor certification and emission performance tests shall be available during testing unless demonstrated 30 days in advance to be an unnecessary hardship. Previous history of procedures does not constitute hardship.

(v) The Administrator shall be notified at least sixty (60) days in advance of the start of the field test period required in Appendices D and E to this part as amended to afford the Administrator the opportunity to have observers present.

(vi) Report of all measurement system evaluations must be submitted within 30 days after the commencement of such evaluation unless otherwise approved by the Administrator.

(vii) Continuous emission monitoring systems listed within this paragraph shall be re-evaluated at least once during any 12 calendar months and demonstrate acceptability of zero and calibration drift (2-hour), relative accuracy error, and calibration error of measurements contained in the applicable performance specification of Appendix D, as amended, or as prescribed by the Administrator. Reporting of such evaluation shall be within 30 days.

(viii) (*a*) The sampling point shall be located at least eight stack diameters (diameter measured at sampling point) downstream and two diameters upstream from any flow disturbance such as a bend, expansion, constriction, or flame, unless another location is approved by the Administrator.

(*b*) The sampling point for monitoring emissions shall be in the duct at the centroid (geometrically centered 1.0 percent area) of the cross section if the cross sectional area is less than 10.50 $m^2$ (113 $ft^2$) or at a point no closer to the wall than 1.898 m (6 ft) if the cross sectional area is 10.50 $m^2$ (113 $ft^2$) or more. The monitor sample point shall be in an area of small spatial concentration gradient and shall be representative of the concentration in the duct.

(ix) The measurement system(s) installed and used pursuant to this paragraph shall be subject to the manufactuer's recommended zero adjustment calibration procedures at least once per 24-hour operating period unless the manufactuer specifies or recommends calibration at shorter intervals, in which case such specifications or recommendations shall be followed. Records of these procedures shall be made which clearly show instrument readings before and after zero adjustment and calibration. Each existing and replacement span and zero gas cylinder shall be traceable to NBS, standard reference materials (SRM) through the use of EPA Protocol Number 1 for use in certifying values for compressed gas cylinders. Within 30 days after the commencement of use of such gas cylinders, the owner or operator shall submit to the administrator certification of traceability of cylinders using the indicated Protocol.

(x) The owner or operator of any smelter subject to this paragraph shall maintain a record of all measurements required by this paragraph. Measurement results shall be expressed as kilograms of sulfur dioxide emitted per hour, maximum 6-hour average, calculated as of the end of each clock hour for the preceding six hours, for each separate measurement system installed and operated pursuant to this paragraph. Results for each measurement system shall be summarized monthly and shall be submitted in a format acceptable to the administrator, to the Director, Enforcement Division, EPA, Region VIII, within fifteen (15) days after the end of each month. An example of an acceptable format is available upon request from the Director, Surveillance and Analysis Division, EPA, Region VIII. A record of such measurements shall be retained for at least two years following the date of such measurements. In addition, the monthly report shall include the following:

(*a*) The eight-hour production rate and associated production figures corresponding to all periods of excess emissions of $SO_2$.

(*b*) The weekly arithmetic average of seven daily zero and calibration check values for each week of the month for each calibration point (zero and upscale) for each monitor required, as computed according to Appendices D and E, of this part.

(*c*) Date, time, and initial calibration values of each required calibration adjustment or other adjustment made on

any monitor during the month, including any time which the monitor was removed or otherwise inoperable for any reason.

(*d*) The date and results summary of each evaluation of any portion of the monitoring system during the month.

(*e*) The percent (%) of on-line availability time by week for each continuous emission monitoring modular part (component) as well as a description of component down time.

(*f*) All conversion values used to derive the 6-hour emission for $SO_2$ which include, but are not limited to: temperature, velocity of stack gases, moisture, parts per million (ppm), and production levels.

(xi) Each monitor modular part (i.e. $SO_2$, volumetric flow rate, and data recording and handling units) of a continuous emission monitoring system shall attain a minimal annual (the four quarters of a calendar year) on-line availability time of 85 percent. If the entire system fails to operate with this reliability, the operator must, with the first monthly report of the next year, explain in detail the reason(s) for this lack of performance.

(xii) The continuous emission monitoring and recordkeeping requirements of this paragraph shall become applicable nine (9) months after the effective date of this paragraph.

(4)(i) Compliance with the requirements of paragraph (d)(1) of this section shall be determined on a continuous basis using the emission measurement system(s) installed, calibrated, maintained, and operated in the main smelter stack in accordance with the requirements of paragraph (d)(3) of this section. For that stack equipped with the mesurement system required by paragraph (d)(3) of this section, a running 6-hour average sulfur dioxide emission rate shall be calculated as of the end of each clock hour, for the preceding six hours, in the following manner.

(*a*) Divide each 6-hour period into twenty-four 15 minutes segments.

(*b*) Determine the emission rate on a compatible basis from a sulfur dioxide concentration and stack gas flow rate measurement for each 15-minute period for the main smelter stack. These measurements may be obtained either by continuous integration of sulfur dioxide concentration and stack gas flow rate measurements (from the affected stack) recorded during the 15-minute period or from the arithmetic average of any number of sulfur dioxide concentration and stack gas flow readings equally spaced over the 15-minute period. In the latter case, the same number of concentration readings shall be taken in each 15-minute period and the readings shall be similarly spaced within each 15-minute period. The sulfur dioxide emission rate for each of the twenty-four segments for that stack shall be determined by multiplying the stack gas volumetric flow rate ($m^3$/hr at standard conditions, dry basis) by the sulfur dioxide concentration (kg/$m^3$ at standard conditions, dry basis).

(*c*) Calculate the arithmetic average of the 24 emission rates calculated for each 6-hour period for the stack. Calculations will be reported in kg $SO_2$/hr.

(ii) Notwithstanding the requirements of paragraph (d)(4)(i) of this section, compliance with the requirements of paragraph (d)(1) of this section may be determined for a specific period of time (i.e. only that time of the manual test) by using the methods described below at such times as may be specified by the Administrator. Any manual stack test conducted under this paragraph may be used both to evaluate current emission levels and to reevaluate the performance of the continuous emission monitor system(s) at that time. For the main smelter stack equipped with the measurement system(s) required by paragraph (d)(3) of this section, a 6-hour average sulfur dioxide emission rate (kg $SO_2$/hr) for a specific period of time, and/or when evaluating the accuracy of the continuous emission measurement system, shall be determined as follows:

(*a*) During testing of the stack emission rate the process shall burn fuels, use raw materials, feed air and oxygen, and maintain process conditions representative of maximum operating conditions, while fugitive emission capture systems are in compliance with the requirements of paragraph (c) and under such other conditions as the Administrator may specify. Given the processing units existing in February 1980 (three reactors, four convertors, etc.), those operating rates shall include, but not be limited to, at least the following: two reactors, at least two convertors, the molybdic oxide roaster, the boilers, and the super heaters, all in full operation, resulting in production of approximately 38 tons per hour of blister copper. Testing shall continue during those times when reactors and convertors are rolled out for normal tapping and charging, but shall be temporarily suspended during process upsets which result from abnormal occurrences. (If in the future the number of processing units or an operating parameter(s) should change, the operating rates specified above, or as may be otherwise specified by the Administrator, may be modified by EPA.) Testing shall not proceed during any time when emissions from any process unit are vented to another stack or emission points.

(*b*) Concentrations of sulfur dioxide in stack gases shall be determined by using Method 8 as described in Part 60 of this chapter. The analytical and computational portions of Method 8 as they relate to determination of sulfuric acid mist and sulfur trioxide as well as isokinetic sampling may be omitted from the overall test procedure.

(*c*) Three independent sets of measurements of sulfur dioxide concentrations and stack gas volumetric flow rates shall be conducted during three 9-hour periods for the stack. During each 9-hour period three nonconcurrent tests, each of at least two hours of sampling time, concurrent with acceptable process operation, shall be conducted. All tests must be completed within a 72-hour period.

(*d*) In using Method 8, traversing shall, whenever possible, be conducted according to Method 1 as described in Part 60 of this chapter, or as otherwise prescribed by the Administrator. The minimum sampling volume for each 2-hour test shall be 1.133 $m^3$ (40 $ft^3$) corrected to standard conditions, dry basis.

(*e*) The volumetric flow rate of the total effluent from the stack evaluated shall be determined by using Method 2 as described in Part 60 of this chapter and, whenever possible, by traversing according to Method 1, or as otherwise prescribed by the Administrator. Gas analysis shall be performed by using the integrated sample technique of Method 3 as described in Part 60 of this chapter. Moisture content shall be determined by use of Method 4 as described in Part 60, Appendix A, of this chapter.

(*f*) The gas sample shall be extracted at a rate proportional to the gas velocity at the sampling point.

(*g*) For each 2-hour test period, the sulfur dioxide emission rate for the stack shall be determined by multiplying the stack gas volumetric flow rate ($m^3$/hr at standard conditions, dry basis) by the sulfur dioxide concentration (kg/$m^3$ at standard conditions, dry basis). The emission rate in kg/hr maximum 6-hour average for the stack shall be determined by calculating the arithmetic average of the results of the three 2-hour tests conducted within a 9-hour period.

(*h*) The average emission rate from the three independent sets of measurements in kg/hr maximum 6-hour average for the stack is determined by calculating the arithmetic average of the 6-hour average values calculated pursuant to paragraph (d)(4)(ii)(*g*) of this section.

[FR Doc. 80-17869 Filed 6-12-80; 8:45 am]

BILLING CODE 6560-01-M

**ENVIRONMENTAL PROTECTION AGENCY**

**40 CFR Part 55**

**[FRL 1507-7]**

## Energy Related Authority; Delayed Compliance Order for the Virginia Electric and Power Company's Portsmouth Generating Station

**AGENCY:** Environmental Protection Agency.

**ACTION:** Final rule.

**SUMMARY:** This notice announces that the Environmental Protection Agency (EPA) is issuing an administrative order to the Virginia Electric and Power Company's Portsmouth Generating Station requiring its Boiler Number 4 at Portsmouth, Virginia to achieve compliance by June 30, 1982 with air pollution requirements under the Virginia State Implementation Plan.

**EFFECTIVE DATE:** June 19, 1980.

**FOR FURTHER INFORMATION CONTACT:** Mr. Mark E. Garrison, U.S. Environmental Protection Agency, Region III, Sixth and Walnut Streets, Philadelphia, Pennsylvania 19106 (215-597-2745).

**SUPPLEMENTAL INFORMATION:** EPA has developed an administrative order which is being issued under Section 113(d)(5) of the Clean Air Act (the Act), 42 U.S.C. 7491 et. seq., to the Virginia Electric and Power Company's Portsmouth Generating Station requiring its Boiler Number 4 at Portsmouth, Virginia to achieve compliance with Virginia State Air Pollution Control Board, Section IV, Rules 2 and 3 of the Virginia State Implementation Plan by June 30, 1982. This order requires that the Virginia Electric and Power Company's Portsmouth Generating Station install control equipment on Boiler Number 4 according to the schedule set forth below, prescribes interim emission reduction requirements, specifies emission limitations, coal pollutant characteristics, and requires monitoring and reporting of air quality and air pollutant emissions data. Compliance with the terms of the order precludes any further enforcement by EPA under Section 113 of the Act and any citizens suits under Section 304 of the Act against the source for violations of the Virginia State Implementation Plan provisions covered by the order.

The entire contents of the order were proposed in the **Federal Register** on October 2, 1979 (44 FR 56721). In this notice EPA invited the public to submit written comments and requests for a public hearing as to whether EPA should issue the order. During the 30-day public comment period ending November 1, 1979 no comments were received by EPA.

As indicated in the proposed notice of October 2, 1979, regulations promulgated in 40 CFR part 55 under the authority of Section 119 of the Act, as in effect prior to the amendments of August 1977, are being revised to reflect this statutory change. Any extensions to be granted under the new authority of 113(d)(5) will be promulgated in part 55. Because of the shorter time period necessary for promulgation of a delayed compliance order (DCO) as compared to the time necessary for revision of the regulations under 40 CFR part 55, this order for the Virginia Electric and Power Company is promulgated under part 55 prior to the publication of the revised regulations.

One major change that the Clean Air Act Amendments of 1977 have had on implementation of the Energy Supply and Environmental Coordination Act is that written concurrence of the Governor of the appropriate State must be obtained on any date EPA proposes to certify to the Department of Energy as the earliest date a prohibited source can convert to coal in compliance with applicable air pollution requirements. This concurrence was requested of the Honorable John N. Dalton, Governor of the Commonwealth of Virginia, and was received on November 21, 1979.

Therefore, based upon the request by the Virginia Electric and Power Company, the EPA's findings, and the written concurrence from Governor John N. Dalton, this order is hereby issued. In addition, this order is being made effective immediately since no purpose would be served by delaying its effective date.

(42 U.S.C. 7413(d))

Dated: June 9, 1980.

**Douglas M. Costle,**

*Administrator.*

Part 55 of Chapter I, Title 40 of the Code of Federal Regulations is amended by adding a new § 55.972 as follows:

### Subpart VV—Virginia

**§ 55.972 Delayed Compliance Order.**

The Administrator hereby issues a delayed compliance order to the Virginia Electric and Power Company's Portsmouth Generating Station, Boiler Number 4, Portsmouth, Virginia (the source), upon the following conditions:

(a) *Primary standard conditions.* The source shall not burn coal which results in the emissions of particulate matter in excess of 2263 pounds of particulate matter per hour from Boiler Number 4 at maximum load and 492 pounds of particulate matter per hour at maximum load from Boiler Numbers 1, 2 and 3 combined, in accordance with the following schedule of compliance:

(1) During the period of the ORDER's effectiveness, the source shall not burn coal with an ash content exceeding 12 percent (12%) and a high heating value of less than 12,000 British Thermal Units (BTU's) per pound.

(2) Within 30 days of receipt of this ORDER, the Virginia Electic and Power Company (the Company) shall submit a proposal for a complete air quality monitoring network to be set up by the Company in the vicinity of the source as required by subparagraph (VI)(A)(1).

(3) Within 90 days after receiving EPA approval of the proposed network, the Company shall complete installation and begin operation of the air quality monitoring network.

(4) Within 90 days of receipt of this ORDER, the Company shall submit for EPA approval the methods, procedures and devices the Company intends to use to obtain the information required by subparagraph (VI)(B).

(b) *Plan for compliance with Section IV, Rules 2 and 3.* The source shall comply with Section IV, Rule 2 (effective date: March 17, 1972) and Rule 3 (effective date: March 17, 1972; amended August 11, 1972) of the Commonwealth

of Virginia in accordance with the following increments of compliance.

(1) April 1, 1980—Enter into contracts for particulate emissions controls and other equipment necessary for final compliance.

(2) May 1, 1980—Submit for approval to the Director of the EPA Region III Air, Toxics and Hazardous Materials Division (hereinafter referred to as the Director), contracts for continuous particulate emission reduction systems and other equipment necessary for final compliance.

(3) April 1, 1981—Initiate on-site construction or installation of continuous particulate control systems.

(4) April 1, 1982—Complete on-site construction or installation of continuous particulate control systems.

(5) June 30, 1982—Perform emission tests in accordance with 40 CFR Part 60 and submit reports demonstrating final compliance with the Regulations of the Commonwealth of Virginia, Section IV, Rules 2 and 3.

(c) *Interim requirements.* The source shall comply with the following interim requirements prior to achieving compliance with Section IV, Rules 2 and 3 of the Commonwealth of Virginia.

(1) Within 60 days of commencing the use of coal in Boiler Number 4, the Company shall perform source testing for particulate emissions using EPA Method 5 as specified in Appendix A of Part 60, Title 40 of the Code of Federal Regulations, as amended. The Company shall perform such tests in a manner prescribed by EPA Region III and shall provide the Regional Energy Coordinator a minimum of 15 days written notice prior to conducting such tests. The Company shall provide a complete report containing all information pertinent to the performance and results of the stack tests within 30 days of completing such tests.

(2) Within 60 days of installation of the continuous opacity monitor required under subparagraph (VI)(A)(6), the Company shall conduct a Performance Specification Test (PST) in accordance with Performance Specification 1, Appendix B of Part 60, Title 40 of the Code of Federal Regulations. The Company shall notify the Regional Energy Coordinator of the date on which the PST will be conducted at least 30 days prior to such date.

(3) Within 45 days of the PST, the Company shall submit a complete report containing all information pertinent to the PST to the Regional Energy Coordinator.

(4) The Company shall keep monthly records of both air quality monitoring data and air pollutant emissions and shall submit such records within 15 days of the end of each calendar month to the Regional Energy Coordinator. These records shall detail daily emissions for all fuel-burning units and shall include for each unit:

(i) Fuel consumption for each day of the preceding month.

(ii) Analysis of the fuel consumed during each week to include sulfur content, ash content and high heating value.

(iii) For the stack serving boiler number 4, a record of the hourly measurement of opacity acquired by means of a continuous opacity monitoring device.

(5) The Company shall notify the Director of any exceedance of the National Primary Ambient Air Quality Standards within 72 hours of the collection of such data.

(6) The Company shall notify the Director within 10 days after each incremental requirement has been satisfied, or within 10 days after the final date set for achieving each such requirement, if such requirement has not been achieved.

(d) Violation of any requirement of this ORDER shall result in one or more of the following actions:

(1) Enforcement of such requirement pursuant to subsection 113(a), (b), or (c) of the Act, including possible judicial action for an injunction and/or penalties and in appropriate cases, criminal prosecution.

(2) Revocation of this ORDER, after notice and opportunity for a public hearing, and subsequent enforcement of the Virginia State Implementation Plan.

(3) If such violation occurs, notice of noncompliance and subsequent action pursuant to Section 120 of the Act.

(e) Nothing herein shall affect the responsibility of the Company to comply with State, local, or other Federal regulations.

The entire ORDER is hereby referenced. Any terms or conditions appearing in the ORDER and not contained herein does not excuse noncompliance by Virginia Electric and Power Company.

**UNITED STATES ENVIRONMENTAL PROTECTION AGENCY**

**Region III**

In the matter of: Virginia Electric & Power Co., Order No. R-III-CC-004.

This ORDER is issued pursuant to Subsection 113(d)(5) of the Clean Air Act, as amended, 42 U.S.C. 7413(d) ["the Act"]. This ORDER contains a schedule for compliance, interim requirements, monitoring and reporting requirements, and other requirements of this subsection of the Act. Public notice has been provided pursuant to subsection 113(d)(1) of the Act, and a copy of this ORDER has been provided to the Governor of the Commonwealth of Virginia to seek his concurrence.

**FINDINGS**

On June 30, 1975, Virginia Electric and Power Company ("Company") received a Prohibition Order from the Federal Energy Administration ("FEA") pursuant to Section 2 of the Energy Supply and Environmental Coordination Act of 1974, 15 U.S.C. 792 (Supp. V, 1975), as implemented by 10 CFR Parts 303 and 305 (1976), as amended, 42 FR 23132 (1977). Said ORDER prohibited, upon receipt of a Notice of Effectiveness, any further burning of natural gas or petroleum products as the primary energy source for the Company's Number 4 Boiler.

The Company's Number 4 Boiler was burning petroleum products at the time the FEA Prohibition Order was issued, and if converted to coal, would no longer be in compliance with every applicable air pollution requirement under the Virginia State Implementation Plan ("SIP"). A violation of the annual primary ambient air quality standard for particulate matter in Chesapeake, Virginia resulted in a finding by the United States Environmental Protection Agency ("EPA") that, for purposes of this Order, the Hampton Roads Intrastate Air Quality Control Region is a nonattainment region with respect to particulate matter and that regional limitation was applicable.

The Company, on February 27, 1979, successfully rebutted the statutory limitation on the effectiveness of an order, pursuant to Section 113(d)(5)(D), by demonstrating that, upon converting Number 4 Boiler to coal, the source's emissions would have an insignificant effect on the air quality concentrations in that portion of the region where particulate matter is being exceeded. They further demonstrated that conversion to coal would not contribute to the exceedance of the national primary ambient air quality standard for particulate matter in Chesapeake, Virginia. The Company, therefore, formally requested from EPA an order to allow the burning of coal as the primary energy source. After a thorough investigation of the information obtained from all sources, including public comment, the Administrator of EPA has determined that the emission limitations, coal pollution characteristics, and other enforceable measures contained in the ORDER below, satisfy the requirements of subsection 113(d)(5)(B) of the Act. Further, pursuant to subsection 113(d)(5)(B), the Administrator has determined that compliance with the requirements of this ORDER will assure that, during the period of the ORDER before final compliance is achieved, the burning of coal by the source will not result in emissions which will cause or contribute to concentrations of any air pollutant in excess of any national primary ambient air quality standard for such pollutant.

Pursuant to subsection 113(d)(6) of the Act, the Administrator has determined that the schedule for compliance set forth below is as expeditious as practicable.

Finally, Pursuant to subsection 113(d)(7) of the Act, the Administrator has determined that the ORDER provides that the source

*B Recordkeeping*

1. The Company shall keep monthly records both of air quality monitoring data and of air pollutant emissions, of which records the Company shall submit copies to the EPA Region III Regional Energy Coordinator within fifteen (15) days of the end of each calendar month. Said air pollutant emission record shall detail daily emission for all fuel-burning units of the Company at its Portsmouth Generating Station as determined by application of EPA emission factors and shall at a minimum include:

a. For each fuel-burning unit, a breakdown of the fuel consumed each day of the preceding month;

b. For each fuel-burning unit, an analysis of the fuel consumed each week to include sulfur content, ash content and high heating value; and

c. For the stack-serving Boiler Number four (4) only, a record of the hourly measurement of opacity, acquired by means of a continuous opacity monitoring device. Such a device shall be installed, calibrated, and maintained in accordance with Performance Specification 1 of Appendix B, Part 60, Title 40 of the Code of Federal Regulations.

2. If, for any reason, the Company does not comply or will be unable to comply with the requirements of this ORDER, the Company shall provide in writing to the Director, Air, Toxics and Hazardous Materials Division, EPA Region III, within five (5) days of becoming aware of such situation:

a. A description of the noncompliance and its cause; and

b. The period during which noncompliance has occurred and/or is expected to occur, and the steps taken to reduce, eliminate and prevent recurrence of the noncompliance.

3. If the air quality monitoring data collected by the Company pursuant to Section A of this paragraph indicates that the National Primary Ambient Air Quality Standards for particulates are being exceeded in the area, the Company shall notify the Director, Air, Toxics and Hazardous Materials Division, EPA Region III, of such occurrence by telephone or letter or other means, within seventy-two (72) hours of the collection of such data.

4 The requirement of subparagraph 3 hereinabove shall apply with respect to monitoring data and the National Ambient Air Quality Standards for Sulfur Dioxide, if such monitoring requirements are imposed pursuant to Section A. of this paragraph.

VII. Nothing herein shall affect the responsibility of Virginia Electric and Power Company to comply with State, local or other federal regulations.

VIII. Virginia Electric and Power Company is hereby notified that its failure to achieve final compliance at its Boiler Number 4 with the applicable particulate emission regulations of the Virginia SIP by June 30, 1982, or such other date as may be specified in a second ORDER pursuant to subsection 113(d) of the Act, if issued, may result in a requirement to pay a noncompliance penalty under Section 120 of the Act. Such requirement may be imposed at an earlier date, as provided by Subsection 113(d) and Section 120 of the Act, either in the event that this ORDER is terminated as provided in Paragraph IX. below, or in the event that any requirement of this ORDER is violated as provided in paragraph X. below. In any event, the Company will be formally notified, pursuant to Subsection 120(b)(3) and any regulations promulgated thereunder, of its noncompliance.

IX. This ORDER shall be terminated in accordance with Subsection 113(d)(8) of the Act if the Administrator or his delegate determines, on the record, after notice and hearing, that an inability of the Company to comply with Rules 2 and 3, Section IV of the Virginia Regulations for the Control and Abatement of Air Pollution, as approved by EPA, no longer exists with respect to its Boiler Number 4. In addition, if the Company is able to demonstrate compliance with Rules 2 and 3 prior to June 30, 1982, then this ORDER may be terminated at that earlier date by mutual agreement of the Administrator and the Company.

X. Violation of any requirement of this ORDER shall result in one or more of the following actions:

A. Enforcement of such requirement pursuant to subsection 113 (a), (b), or (c) of the Act, including possible judicial action for an injunction and/or penalties and in appropriate cases, criminal prosecution.

B. Revocation of this ORDER, after notice and opportunity for a public hearing, and subsequent enforcement of the Virginia SIP in accordance with the preceding paragraph.

C. If a violation occurs, notice of noncompliance and subsequent action pursuant to Section 120 of the Act.

XI. This ORDER is effective upon promulgation in the Federal Register and after having received concurrence from the Governor of the Commonwealth of Virginia.

Dated: June 9, 1980.

**Douglas M. Costle,**

*Administrator or Delegatee, U.S. Environmental Protection Agency.*

**Waiver of Rights To Challenge ORDER**

Virginia Electric and Power Company, by the duly authorized undersigned, hereby consents to the findings made and to the terms of this ORDER and waives any and all rights under any provision of law to challenge this ORDER.

Dated: November 19, 1979.

**Morris L. Brehmer.**

[Authority: 42 U.S.C. 7413(d)]

[FR Doc. 80-18388 Filed 6-18-80; 8:45 am]
BILLING CODE 6560-01-M

Texas, any gases which exhibit greater than 35% opacity, except that a maximum of 42% opacity shall be permitted for not more than 6 minutes in any hour.

(Sec. 111, 301(a), Clean Air Act as amended (42 U.S.C. 7411, 7601.))

2. Section 60.45(g)(1) is amended by adding paragraph (i) as follows:

**§ 60.45 Emission and fuel monitoring.**

* * * * *

(g) * * *

(1) * * *

(i) For sources subject to the opacity standard of Section 60.42(b)(1), excession emissions are defined as any six-minute period during which the average opacity of emissions exceeds 35 percent opacity, except that one six-minute average per hour of up to 42 percent opacity need not be reported.

[FR Doc 79-20156 Filed 6-28-79; 8.45 am]
BILLING CODE 6560-01-M

**ENVIRONMENTAL PROTECTION AGENCY**

**40 CFR Part 52**

**[A4 FRL 1665-6]**

## Georgia: Plan Revision Relating to Georgia Power Plant Harllee Branch; Approval and Promulgation of Implementation Plans

**AGENCY:** U.S. Environmental Protection Agency, Region IV.

**ACTION:** Proposed rule.

**SUMMARY:** EPA today proposes approval action on a State Implementation Plan (SIP) revision submittal made by the Georgia Environmental Protection Division in accordance with the requirements of Section 110 of the Clean Air Act. The revision to Georgia's SIP involves an Enforcement Order for Georgia Power's Plant Harllee Branch which was transmitted to EPA May 13, 1980, and was subjected to a public hearing on January 31, 1980.

**DATE:** To be considered, comments must be submitted on or before December 12, 1980.

**ADDRESS:** Written comments should be addressed to Melvin Russell, EPA Region IV's Air Program Branch (see EPA Region IV address below). Copies of the materials submitted by Georgia may be examined during normal business hours at the following locations:

Public Information Reference Unit, Library Systems Branch, Environmental Protection Agency, 401 M Street, SW., Washington, D.C. 20460.

Library, Environmental Protection Agency, Region IV, 345 Courtland Street, NE., Atlanta, Georgia 30365.

Air Protection Branch, Envvironmental Protection Division, Georgia Department of Natural Resources, 270 Washington Street, SW., Atlanta, Georgia 30334.

**FOR FURTHER INFORMATION CONTACT:** Mr. Melvin Russell, Environmental Protection Agency, Region IV, 345 Courtland Street, NE., Atlanta, Georgia 30365. Telephone: 401/881-3286 or FTS 257-3286.

**SUPPLEMENTARY INFORMATION:** Georgia Power's Plant Branch is at present in compliance with applicable State and Federal air quality standards. The procedure for demonstrating compliance with the mass emission limit contained in Georgia Rule 391-3-1-.02(2)(d) is being altered to enable Units 3 and 4 of Plant Branch an alternative method to demonstrate compliance with the mass emission limit, in the event that a quarterly compliance test of these units indicates emissions of particulate matter that exceed the limit.

The alternate procedure proposed by the Georgia Environmental Protection Division would not alter the mass emission limit, but would allow Units 3 and 4 to demonstrate compliance with Rule 391-3-1-.02(2)(d) by use of a correlated opacity test procedure. Under the alternate procedure Units 3 and 4 must be operated at all times, such that the opacity from the common stack shall not exceed a correlated opacity which corresponds to the mass emission rate which complies with Rule 391-3-1-.02(2)(d).

The correlated opacity was determined through a series of stack tests in which opacity and mass emission rates were measured simultaneously. It was determined that 40% opacity for Units 3 and 4 will assure compliance with the mass emission limit.

This alternate procedure for demonstrating compliance with Georgia Rule 391-3-1-.02(2)(d) will be accepted as an interim procedure, and may not be used beyond December 31, 1982.

EPA has reviewed the data establishing the correlated opacity and found it to be acceptable. EPA, therefore, proposes to approve this revision to Georgia's State Implementation Plan.

(Section 110 of the Clean Air Act (42 U.S.C. 7410))

Dated: October 28, 1980.

**Rebecca W. Hanmer,**

*Regional Administrator.*

[FR Doc 80-35229 Filed 11-10-80; 8:45 am]

BILLING CODE 6560-38-M

## ENVIRONMENTAL PROTECTION AGENCY

[AD-FRL 1674-3]

## Collection of $SO_2$ Emissions Data From Certain Coal-Fired Electric Utility Steam Generating Units

**AGENCY:** U.S. Environmental Protection Agency (EPA).

**ACTION:** Notice.

**SUMMARY:** The purpose of this Notice is to announce a one-year program being considered by the Administrator to expand the availability of short-term $SO_2$ emissions data from certain coal-fired electric utility steam generating units and to invite comment on the intended program before it is made final. The program would require, under authority granted to the Administrator by Section 114 of the Clean Air Act, that utilities report the 24-hour (daily) $SO_2$ emission rate (lb. $SO_2/10^6$ Btu) and the daily heat input ($10^6$ Btu) for each coal-fired steam generator capable of firing at least 3,000 million Btu/hr heat input (300-MW potential electrical output capacity). Utilities will be allowed to use continuous (and possibly intermittent) emission monitoring or fuel sampling and analysis methods to determine the required emissions information in accordance with criteria set forth by the Administrator.

Today's Notice describes the basis for the one-year program under consideration and presents the tentative requirements which would have to be met in complying with the program. Final requirements will be established after the Administrator has had an opportunity to consider the comments received pursuant to this Notice.

**DATES:** EPA will consider comments received on or before March 9, 1981.

**ADDRESS:** Comments should be submitted (in duplicate, if possible) to: Central Docket Section (A-130), U.S. Environmental Protection Agency, 401 M St. SW, Washington, D.C. 20460, Attention: Docket No. OAQPS-79-12.

Docket No. OAQPS-79-12, containing material relevant to this Notice, is located in the Central Docket Section of the U.S. Environmental Protection Agency, West Tower Lobby Gallery I, 401 M St. SW, Washington, D.C. 20460. The docket may be inspected between 8:00 a.m. and 4:00 p.m. on weekdays and a reasonable fee may be charged for copying.

**FOR FURTHER INFORMATION CONTACT:** Joseph Sableski or Daniel deRoeck, Plans Guidelines Section (MD-15), U.S. Environmental Protection Agency, Research Triangle, Park, N.C. 27711; Telephone No. (919) 541-5437, or (FTS) 629-5437.

**SUPPLEMENTARY INFORMATION:**

### I. Background

The Administrator of the U.S. Environmental Protection Agency is considering the implementation of a one-year reporting program applicable to coal-fired electric utility steam generating units. The program, requiring the submission of daily $SO_2$ emissions data, would enable the Agency to significantly improve its ability to define the emissions from power plants and would provide a data base to more effectively assess the environmental impacts of $SO_2$ emissions.

Relatively little short-term $SO_2$ emissions data from power plants are currently available. While several special studies of short duration have been made on individual plants, EPA's main data base defines annual average $SO_2$ emissions. The interpretation of short-term averages using long-term averages is very difficult at best because of the tendency for power plants burning coal to experience highly variable emissions, especially over short averaging periods of 24 hours or less. This emissions variability results from the natural variation in the sulfur content of coal. In recent years there has been a growing awareness of the problems associated with sulfur variability in developing meaningful emission limits and determining compliance for coal-fired sources. The data that would be acquired through the program being considered by the Administrator could assist the Agency in its planned review of existing policies and procedures for developing, evaluating, and enforcing emission limits for coal-fired power plants (45 FR 9994, February 14, 1980).

*$SO_2$ Emission Limits for Power Plants*

Traditionally, the setting of emission limits for coal-fired power plants has been done without allowances for sulfur variability. Mathematical dispersion models used to predict ground-level concentrations of $SO_2$ have generally assumed a constant emission rate. The predictions from these models were then used to develop emission limits which typically did not specify an averaging period over which the limit would apply. As a result, the tendency has been that such inadequately-defined emission limits are interpreted inconsistently and are usually not applied to short-term periods such as 24 hours or less.

EPA is evaluating various alternative methods for establishing emission limits for power plants. In some cases, the methods make specific allowances for

sulfur variability. In any event it is clear that meaningful emission limits must specify averaging periods over which the limit will apply. Additionally, the Agency believes that the averaging period should be adequate to demonstrate protection of the ambient standards.

One of the approaches being evaluated includes a modeling technique that replaces the constant emission rate with a distribution of $SO_2$ emission rates to determine statistically the air quality impact that may result. (45 FR 9996, February 14, 1980). Another approach, which is already being applied by some States, is to set a 24-hour maximum limit with several exceptions allowed per month. Also, a number of States and industries have recommended a 30-day averaging period. While the Agency does not endorse any such approaches for general application at this time, the availability of an emissions data base defining the short-term variability of $SO_2$ emissions is an important element in appraising the implications of various alternative approaches for setting future $SO_2$ emission limits.

*Compliance Status of Power Plants*

As the trend for enforcement programs moves away from determining compliance on an infrequent basis and towards continuous determination of compliance, the routine availability of data becomes an important consideration. Routine data collection is especially important when enforcing regulations for sources whose emissions tend to vary even under constant operating loads.

**II. Proposed Program**

The program being considered by the Administrator would require the owners or operators of prescribed coal-fired electric utility steam generating units (see *Affected Sources* below), to calculate and report to EPA the following information:

1. *$SO_2$ emission rate* (lb.$SO_2$/$10^6$Btu) expressed as a 24-hour (daily) average; and

2. *Heat input* ($10^6$ Btu) expressed on a 24-hour (daily) basis.

The above information would be reported quarterly according to a schedule that would be announced after the Administrator has considered comments on the proposed program. Also, utilities would be required to submit additional information, as part of the initial quarterly report, to identify the source(s), characterize the coal being consumed, and to describe the methods used for determining the $SO_2$ emissions. Table 1 summarizes the information that the Administrator intends to require.

Through the response to question number 12 at the end of this Notice, the Administrator will be able to assess the feasibility of collecting data for averaging periods less than 24 hours. This requirement would potentially only apply to utilities having continuous emission monitors that provide data on as short a time frame as 15 minutes.

One way to expedite the Agency's acquisition of short-term data is to establish retroactive reporting requirements. That is, utilities would be required to determine their daily 24-hour emission rate for a one year period which has already commenced, e.g., January 1 to December 31, 1980. In order for this to be feasible, utilities must have adequate historical data from which emission rates and heat inputs can be determined. Therefore, this notice solicits comments on the availability of historical data retained by utilities, and the time that would be needed to review such data and make the appropriate daily determinations.

*Affected Sources:* Coal-fired electric utility steam generating units having a potential electrical output capacity of 300 MW (3,000 million Btu/hr input) would be subject to the requirements of the proposed program. Information available to the Agency indicates that, based on this cutoff size, approximately 225 coal-fired steam generators would be affected. These units account for about half the $SO_2$ emissions produced by the electric utility industry. The Administrator believes that the selected cutoff size would serve to minimize the burden on the electric utility companies and keep the amount of data received by EPA to a manageable level, while providing the Agency with a meaningful data base.

*Sampling Methods:* The Administrator intends to accept $SO_2$ emissions information that is derived from either continuous emission monitoring or fuel sampling and analysis methods. He is also considering another method, known as intermittent monitoring; this method is further discussed below.

An affected coal-fired steam generating unit that has installed a continuous monitor to comply with Federal (40 CFR Part 60) or State regulations to install and operate a continuous emission monitoring system for $SO_2$ must use that system as the basis for calculating the required emissions information. The program described herein does not attempt to impose additional monitoring requirements for continuous monitoring on utilities, but it will specify that required monitors be calibrated and operated in accordance with the applicable regulations.

**Table 1. Summary of Information Required by Proposed EPA Program**

*Quarterly Reports*

- 24-hr. (daily) emission rate (lb. $SO_2$/$10^6$ Btu)
- 24-hr. (daily) heat input ($10^6$ Btu)

*Initial Report Only*

1. Source Information:
- Company name and address
- Plant name and address
- Unit I.D.
- Heat input capacity/Potential electrical output capacity
- Name and title of reporting official

2. Emissions Characterization Information:
- Type(s) of coal used (Bituminous, etc.)
- Source of coal (Bureau of Mines Coal Districts)
- Standard sampling method (CEM vs. coal sampling and analysis)
- Identification of ASTM procedures, where applicable
- Use of flue gas desulfurization
- Use of coal cleaning methods

Where continuous monitoring is not currently required and installed, $SO_2$ emissions from affected coal-fired steam generators would have to be estimated from the collection and analysis of daily coal samples. The Administrator is mindful of the comments received from utility representatives in response to the Advance Notice of Proposed Rulemaking entitled "Emission Monitoring of Stationary Sources" (44 FR 46481, August 8, 1979). Those comments strongly suggested that fuel sampling and analysis techniques could be used to determine $SO_2$ emissions in lieu of continuous monitors.

EPA is continuing its investigation of the need for requiring continous monitoring for existing coal-fired steam generators, but intends to examine the feasibility of allowing other methods, such as fuel sampling and analysis, where they are shown to be acceptable alternatives. The fact that the proposed program would allow the use of fuel sampling and analysis techniques does not imply that they will be prejudged as acceptable alternatives for future regulatory programs; however, the Administrator may be able to use the data to assist in making that kind of decision at a later date.

The main steps in a fuel sampling and analysis program include (1) collection of a representative sample, (2) preparation of the sample for analysis, and (3) analysis of the sample for its essential components and heat content. Information available to EPA indicates

that many, if not most, utilities generally follow standard testing procedures published by the American Society of Testing Materials (ASTM). Therefore, in a manner consistent with current industry practices, the Administrator intends to specify that utilities use the following methods to collect, prepare, and analyze their coal samples:

•ASTM D-2234 (Standard Methods for Collection of a Gross Sample of Coal);

•ASTM D-2013 (Standard Method for Preparing Coal Samples for Analysis);

•ASTM D-3177 (Standard Test Method for Total Sulfur in the Analysis of Coal and Coke), or an acceptable automatic analytical device;

•ASTM D-2015 (Standard Test Method for Gross Calorific Value of Solid Fuel by the Adiabatic Bomb Method).

A very difficult step in the fuel sampling and analysis program is the initial step of collecting a representative gross sample. This is complicated by the fact that there is no single standard method of collection or coal sampling universally employed by utilities or prescribed by ASTM. The coal sampling procedure for each power plant is designed in conjunction with the specific coal distribution system in use at the plant. The introduction to ASTM D-2234 acknowledges this situation in the following way:

> These standard methods give the over-all requirements for the collection of coal samples. The wide varieties of coal handling facilities preclude the publication of detailed procedures for every sampling situation. The proper collection of the sample involves an understanding and consideration of the physical character of the coal, the number and weights of increments, and the over-all precision required.

Thus, ASTM D-2234 is actually a series of methods that are classified according to the reliability of each individual method. Classifications are based upon the type (human discretion vs. no human discretion) of increment collection, the conditions (e.g., full stream cut, part stream cut) of increment collection, and the kind of intervals or spacing (systematic vs. random) between increments. Accordingly, the owner or operator of each affected steam generator will be expected to use the most reliable classification method that can reasonably be applied without major expenditure and equipment replacement by the utility.

Utilities will be expected to collect, to the extent feasible, samples of coal on a daily "as-fired" basis. "As-fired" is interpreted here to mean that the sample is collected from the coal stream just prior to filling the bunkers (or silos) or at any point downstream of the bunkers before it is conveyed to the combustion chamber of the boiler.

Where "as-fired" sampling is not feasible, utilities would have to estimate their daily emissions on the basis of sampling performed at other locations. In most instances, where an "as-fired" sampling procedure cannot be implemented, coal will be sampled when it is received from the supplier or mine prior to storage for later use. Utilities must apply their best engineering judgment when basing their emission estimates on "as-received" samples since these coal samples generally will not be representative of the coal which is actually burned during any particular day.

The methods involved in the preparation and analysis of coal samples appear to be more straightforward than those for collecting the gross sample. Preparation and analysis methods are not dependent on the differences in individual coal distribution systems from one plant to another. Consequently, these methods are more readily standardized. One disadvantage of the ASTM method for sulfur analysis, however, is that it generally takes several hours to complete. For this reason, a number of utilities have switched to an automated analytical device so that sulfur content can be determined much more rapidly. Therefore, where such automated devices are used, the Administrator intends to accept them in lieu of the standard ASTM method.

As mentioned above, the Administrator is also considering intermittent monitoring as a method for determining $SO_2$ emmissions under this program. In this method, the $SO_2$ is collected by an in-stack sampling train, captured in a solution, and analyzed. The operation of the train is controlled intermittently by a timer or on a continuous basis by a pump with a low, constant flow rate. This method would allow an extended sampling period (in this case, 24 hours) and the determination of the average $SO_2$ emission rate for that period. As of this writing, EPA is preparing a notice that would propose the intermittent monitoring method as an acceptable procedure for compliance with § 60.47a(f) of 40 CFR Part 60, Subpart DA: Subpart DA covers new source performance standards for fossil fuel-fired steam electric plants. Paragraph (f) requires that in the event of a breakdown in the continuous emission monitoring system, emission data must be obtained by other monitoring systems or reference methods approved by EPA.

*Emission Calculations*

(1) Utilities would be required to calculate a daily average emission rate through the use of continuous emission monitoring or coal sampling and analysis methods for each affected coal-fired steam generator according to the following procedures:m urage

(i) For continuous emission monitoring, the hourly $SO_2$ emission rate is to be arithmetically averaged for each hour of boiler operation per day. The hourly emission rates are calculated according to the procedures in 40 CFR 60.45 (e) and (f).

(ii) For coal sampling and analysis, the following equation is to be used:

$$\bar{E} = \frac{2.0(\%S)}{GCV} \times 10^4$$

Where:

E = Daily sulfur dioxide emission rate from fuel analysis; lb/million Btu.

%S = Sulfur content of daily fuel supply, on a dry basis; weight percent.

GCV = Gross calorific value of daily fuel supply, on a dry basis; Btu/lb.-

(2) Values for the 24-hour (daily) heat input, expressed in million Btu's per day, could be determined directly from knowledge of the gross calorific value of the coal and the amount of coal consumed during each daily 24-hour period. However, where information pertaining to the daily tonnage of coal consumed cannot readily be determined, it is more likely that utilities will depend upon daily megawatt production data which can be converted to a daily heat input value when the efficiency of the boiler is taken into account. The Administrator intends to accept either method for determining the daily heat input.

*Additional Consideration:* In addition to comments on the program described above, EPA is also interested in obtaining comments on the following indirectly related matter.

In the Federal Register of October 6, 1975, EPA promulgated regulations requiring continuous emission monitoring on certain source categories under Part 60 (New Source Performance Standards) (40 FR 46250). Subpart D of that regulation allows fossil fuel-fired steam generators without flue gas desulfurization units to use continuous emission monitors or fuel sampling and analysis to determine $SO_2$ emissions. At

the time of promulgation, however, EPA concluded that a meaningful fuel analysis procedure could not be developed that would be adequate or consistent with the then-current fuel situation. EPA indicated that further study was necessary to specify a procedure. Facilities that elected to use fuel analysis instead of continuous $SO_2$ monitoring did not actually have to begin sampling and analysis until EPA published a sampling and analysis procedure. Therefore, a gap currently exists in the Federal regulations. Nevertheless, almost all utilities which are burning low sulfur coal to meet the NSPS are reportedly analyzing coal sample and in many cases they are also monitoring $SO_2$ in stack gases. EPA is therefore posing another question in this notice on the feasibility of requiring power plants to use the data obtained from fuel analysis in preparing excess emission reports.

### III. Program Authority

Section 114 of the Clean Air Act provides administrative authority for EPA to require the owner or operator of any emissions source to report its emissions and any other information as may be reasonably required by the Administrator. The Administrator believes that the one-year program being considered is an appropriate use of Section 114 in that the data which would be required will be used by the Agency to evaluate techniques for setting $SO_2$ emission limits and to orient and prioritize new enforcement initiatives to bring sources into compliance with the requirements of implementation plans.

In light of the nationwide impact of the requirements, the Administrator is announcing his intentions so that utilities and other interested persons may respond. After all relevant comments have been considered, the Administrator will announce the final program in a subsequent Federal Register Notice. However, each utility will be sent a certified letter citing the authority under Section 114 which will require that the prescribed emissions information for affected coal-fired steam generating units be reported to EPA. Utilities will be required to provide a written acknowledgement of receipt of the Section 114 letter to EPA.

### IV. Comments

The Administrator invites general comments on the overall program described in this Notice. Also, he is particularly interested in comments pertaining to coal sampling and analysis methods and the extent of their use by utilities. In order to direct commenters to specific areas of interest, comments should address, but not be limited to, the following:

1. What are the specific problems associated with estimating the daily $SO_2$ emission rate on the basis of "as-received" coal samples?

2. What additional costs will be incurred in order to collect and analyze daily coal samples?

3. What types of modifications to existing coal sampling systems would have to be made to increase their reliability (based on ASTM classification)?

4. What procedures are used to assess the reliability of current coal sampling methods?

5. How often is the steam-electric heat rate evaluated?

6. Does the heat rate vary significantly from day to day?

7. Is daily coal consumption data (i.e., tons of coal burned per day) routinely documented?

8. What additional costs would be incurred to make the required determinations of daily $SO_2$ emission rates and heat input for the one-year reporting period?

9. Is adequate historical data available to determine the daily $SO_2$ emission rate and heat input for the one-year period beginning January 1, 1980? How much time would be needed to make the necessary determinations based on historical data?

10. What duplication of burdens with other State, local or Federal requirements would result from compliance with the proposed requirements?

11. What has been control agency experience with the use of fuel analysis data to estimate emissions?

12. For those sources with continuous emission monitors, what additional costs would be incurred to make the required determinations of $SO_2$ emission rates and heat input, on a 3 hour basis, for the one-year reporting period?

13. What financial and technical problems are incurred if EPA specifies as-fired fuel analysis as described in 40 CFR Part 60, Appendix A, Method 19, Section 3.3 as the acceptable fuel sampling method of 40 CFR Part 60, Subpart D, Section 60.45 for the purposes of reporting excess emissions?

Dated. December 29, 1980.

Douglas M. Costle,

*Administrator.*

[FR Doc 81-612 Filed 1-7—81, 8.45 am]

BILLING CODE 6560-26-M

federal register

Monday
January 26, 1981

## Part IX

# Environmental Protection Agency

**Standards for Performance for New Stationary Sources; Revisions to General Provisions and Additions to Appendix A, and Reproposal of Revisions to Appendix B**

**ENVIRONMENTAL PROTECTION AGENCY**

**40 CFR Part 60**

**[AD-FRL 1625-7]**

## Standards of Performance for New Stationary Sources; Proposed Revisions to General Provisions and Additions to Appendix A, and Reproposal of Revisions to Appendix B

**AGENCY:** Environmental Protection Agency (EPA).

**ACTION:** Proposed Rule and Notice of Public Hearing.

**SUMMARY:** This proposed rule (1) revises the monitoring requirements (§ 60.13) of the General Provisions, (2) adds Methods 6A and 6B to Appendix A, and (3) reproposes revisions to Performance Specifications 2 and 3 to Appendix B of 40 CFR Part 60. The proposed revisions to § 60.13 are being made to make this section consistent with the proposed revisions to Appendix B. Methods 6A and 6B are being proposed because they simplify the determination of the $SO_2$ emission rates in terms of ng/J. Performance Specifications 2 and 3 revisions are being reproposed because the changes that have been made to the performance specifications as a result of comments received on the original proposal of October 10, 1979 (44 FR 58602) are substantial and involve an entirely new concept.

**DATES:** *Comments.* Comments must be received on or before March 27, 1981.

*Public Hearing.* A public hearing will be held on February 19, 1981 beginning at 9 a.m.

*Request to Speak at Hearings.* Persons wishing to present oral testimony must contact EPA by February 12, 1981 (1 week before hearing).

**ADDRESSES:** *Comments.* Comments should be submitted (in duplicate if possible) to: Central Docket Section (A-130) Attention: Docket Number OAQPS-79-4, U.S. Environmental Protection Agency, 401 M Street, SW., Washington, D.C. 20460.

*Public Hearing.* The public hearing will be held at Emission Measurement Laboratory, R.T.P. North Carolina. Persons wishing to present oral testimony should notify Ms. Vivian Phares, Emission Measurement Branch (MD-13), U.S. Environmental Protection Agency, Research Triangle Park, North Carolina 27711, telephone number (919) 541-5423.

*Docket.* Docket Number OAQPS-79-4 (Performance Specifications 2 and 3) and Docket Number A-80-30 (Methods 6A and 6B), containing supporting information used in developing the proposed rulemaking are located in the U.S. Enviromental Protection Agency, Central Docket Section, West Tower Lobby, Gallery 1, Waterside Mall, 401 M Street, S.W., Washington, D.C. 20460. The docket may be inspected between 8 a.m. and 4 p.m. on weekdays, and a reasonable fee may be charged for copying.

**FOR FURTHER INFORMATION CONTACT:** Mr. Roger T. Shigehara (MD-19), U.S. Environmental Protection Agency, Research Triangle Park, North Carolina 27711, telephone number (919) 541-2237.

**SUPPLEMENTARY INFORMATION:** The discussion in this section has been divided into three separate parts. Part A discusses proposed changes to the General Provisions of 40 CFR Part 60, Part B discusses the addition of proposed Methods 6A and 6B to Appendix A, and Part C discusses reproposal of revisions to Performance Specifications 2 and 3 to Appendix B.

### Part A

The proposed revisions to § 60.13 of the General Provisions are being made to make this section consistent with the proposed revisions to Appendix B. Since the reproposal to Appendix B uses the concept of evaluating the continuous emission monitors as a system, based on relative accuracy test results, the use of certified cylinder gases, optical filters, or gas cells is not necessary. The requirement for quantification of the zero and span drifts is not a change, but a clarification of what is required under the existing performance specifications.

### Part B

Two reference methods (Methods 6A and 6B) are proposed. Method 6A, "Determination of Sulfur Dioxide, Moisture, and Carbon Dioxide Emissions from Fossil Fuel Combustion Sources," combines the sampling and analysis of $SO_2$ and $CO_2$. The $SO_2$ is collected in a hydrogen peroxide solution and analyzed by the barium-thorin titration procedure described in Method 6. The $CO_2$ is collected by a solid absorbent and analyzed gravimetrically. The sample gas volume is measured to allow determination of $SO_2$ concentration, $CO_2$ concentration, moisture, and emission rate from combustion sources in ng/J. If the only measurement needed is in terms of emission rate or if the $CO_2$ and moisture concentrations are not needed, e.g., to convert $NO_x$ concentration to ng/J, the volume meter is not required. It is intended that Method 6A be used as an alternative to Methods 6 and 3 for the purpose of determining $SO_2$ emission rates in ng/J.

Method 6B, "Determination of Sulfur Dioxide and Carbon Dioxide Daily Average Emissions from Fossil Fuel Combustion Sources," employs the same sampling train and analysis procedures as Method 6A, but the operation of the train is controlled on an intermittent basis by a timer or on a continuous basis by using a low, constant flow-rate pump. This allows an extended sampling time period and the determination of an average value for that time period of $SO_2$ concentration, $CO_2$ concentration, and emission rate from combustion sources in ng/J. Method 6B is proposed as an acceptable procedure for compliance with § 60.47a (f) of 40 CFR Part 60, Subpart Da. This paragraph (f) requires that in the event of CEMS breakdown, emission data will be obtained by using other monitoring systems or reference methods approved by the Administrator.

### Part C

Revisions to Performance Specifications 2 and 3 for the initial evaluation of continuous emission monitoring systems (CEMS) for $SO_2$, $NO_x$, and diluent gases were proposed on October 10, 1979 (44 FR 58602). Comments received as a result of this proposal led to reevaluation of the provisions and a change in the overall approach to the performance specifications. The reproposed performance specifications deemphasize instrument equipment specifications and add emphasis to the evaluation of the CEMS and its location as a system. The specification requirements are limited to calibration drift tests and relative accuracy tests. The acceptability limits for relative accuracy remain the same as in the previously proposed revisions to the performance specifications.

CEMS guidelines will also be published in a separate document at the time of proposal to provide vendors, purchasers, and operators of CEMS with supplementary equipment and performance specifications. The guidelines will contain additional procedures and specifications that may provide further evaluation of the CEMS beyond that required by Performance Specifications 2 and 3, e.g., response time, 2-hour zero and calibration drifts, sampling locations, and calibration value analyses.

### Applicability

The proposed revisions would apply to all CEMS currently subject to Performance Specifications 2 and 3. These include sources subject to standards of performance that have

already been promulgated and sources subject to Appendix P to 40 CFR Part 51. Since the requirements of the reproposed performance specification revisions are limited to daily calibration drift tests and relative accuracy tests, existing CEMS that met the specifications of the current Performance Specifications 2 and 3 also meet the requirements of these revised specifications and, therefore, do not require retesting.

This reproposal has retained the definition of a "continuous emission monitoring system" and includes the diluent monitor, if applicable. This definition requires the relative accuracy of the CEMS to be determined in terms of the emission standard, e.g., mass per unit calorific value for fossil fuel-fired steam generators. Several commenters felt that the limits of relative accuracy should be relaxed from the present 20 percent because of the addition of the diluent analyzer output. Others added that errors with the manual reference methods could increase the possibility of poor relative accuracy determinations now that an additional measurement is required. The Administrator has reviewed a number of relative accuracy tests and has concluded that the variations in the manual reference method determinations are not the major cause of failure, but that the difference between the mean of the reference method and the CEMS values is the most probable cause. This situation is correctable.

**Comments on Proposal**

Numerous commenters noted that the proposed revisions go far beyond clarification and considered them as significant changes. A large part of this concern was because they felt that many existing CEMS were not installed according to the proposed installation specifications. In addition, many commenters felt the need for greater flexibility in selecting alternative CEMS measurement locations. Several commenters desired the inclusion of test procedures to evaluate single-pass, in situ CEMS. Others objected to the length and cost of testing. Opposing views were presented on the need for stratification checks. Many commenters dealt with specific parts of the proposal and a few raised issues beyond the scope of the revisions. Because the Administrator has changed the overall approach to performance specifications as mentioned in the beginning of Part C, many of these comments no longer apply and many of the objections have been resolved.

The quality assurance requirements for CEMS and associated issues were raised by many commenters. Most commenters stated that there was a need for EPA to issue guidelines or requirements for quality assurance. EPA is developing such procedures, and they will be published later this year or early next year as Appendix E to 40 CFR Part 60. Some commenters erroneously assumed that the quality assurance procedures were an integral part of the specifications. Although related, this specification should be evaluated on the basis of its adequacy in evaluating a CEMS after their initial installation.

The reproposed performance specifications include a provision that the relative accuracy of a CEMS must be within ±20 percent of the mean reference value or ±10 percent of the applicable standard, whichever is greater. Several commenters endorsed this change, while one felt the change to allow an accuracy of ±10 percent of the applicable standard is too lenient at low emission rates. The Administrator feels that it is restrictive to require a high degree of relative accuracy when the actual emission levels are equivalent to 50 percent or less of the applicable emission standard.

**Request for Comments on Other Views**

A number of suggestions were received which were not incorporated in these revisions. Because they represent differing views, EPA requests comments on them to determine what course of action should be taken in the final rule making. The suggestions are as follows:

1. Section 60.13(b) was revised to exclude the mandatory 7-day conditioning period used to verify the CEMS operational status. Once commenter feels that the mandatory conditioning period should not only be retained, but should be made longer depending on how the CEMS is used (i.e., for operation and maintenance requirements or for compliance/enforcement purposes) as follows:

a. The presently required 7-day conditioning period should be retained for CEMS used for operation and maintenance requirements.

b. If the CEMS is used for compliance/enforcement purposes, a 30-day conditioning period should be required and that the relative accuracy tests should be spread over 3 days instead of one.

c. All CEMS, whether for operation and maintenace requirements or for compliance/enforcement purposes, should be installed and operational for 60 or 90 days prior to the initial NSPS test.

If the above are done, the commenter feels that (1) the owner/operator/agency would be aware of the progress made by the control system in complying with the emission standards, (2) there would be a greater chance of the CEMS passing the performance specification test and of the facility complying with the regulations within the time requirements of § 60.8, and (3) the operator/vendor/tester/agency would minimize loss of valuable resources and time.

2. Once commenter feels that § 60.13(c) should require all CEMS Performance Specification Tests to be done concurrent with NSPS tests under § 60.8. This would streamline the process and save resources for owners and agencies alike.

3. Section 60.13(d) was revised to delete the requirements listed under (d)(1) and (d)(2) because EPA felt that the relative accuracy test would validate the CEMS system which includes the calibration gases or devices. One commenter, however, feels that the requirement to introduce zero and span gas mixtures into the measurement system at the probe at the stack wall should be retained and conducted in such a way that the entire system including the sample interface is checked. This requirement would provide a means to check the CEMS on a daily basis. In addition the commenter feels that the requirement for checking the calibration gases at 6-month intervals may be deleted provided that the values used for replacement gas cylinders, calibration gas cells or optical filters are approved by the control agency.

4. One commenter feels that the following specifications should be added in Section 4 of Performance Specification 2:

a. The CEMS relative accuracy should be relaxed by using a sliding function of the allowable emission standard and/or the reference method tests for very low emission limits, e.g., 0.10 pounds per $10^6$ Btu emission limit under PSD permits.

b. Each new compliance/enforcement CEMS installed after 1983 must have an external means of checking the calibration of the instrument using separate calibration/audit materials

c. A minimum data recovery specification of at least 18 hours in at least 22 out of 30 days (or similar) should be included. This would mean that a performance specification test would not be officially completed until after the 30 days.

5. One commenter feels that EPA should consider using Section 7.1 of Performance Specification 2 to specify that during the CEMS performance specification test all data be recorded both in separate units of measurements (ppm and percent $CO_2$ or $O_2$) as well as combined units of the standard.

6. In Performance Specification 2, the definition of "Relative Accuracy" is incorrect. Instead of a degree of correctness, it is actually a measure of "relative error." One commenter feels that "relative accuracy" should be changed to "relative error."

7. In Section 7.3 of Performance Specification 2, the tester is allowed to reject up to three samples provided that the total number of test results used to determine the relative accuracy is greater than or equal to nine. EPA had considered using statistical techniques to reject outliers, but found that these techniques were too restrictive. One commenter feels that statistical techniques should be used. At a minimum, the commenter feels that the control agencies should be consulted before any data is rejected.

**Miscellaneous**

Authority: This proposed rule making is issued under the authority of sections 111, 114, and 301(a) of the Clean Air Act as amended (42 U.S.C. 7411, 7414, and 7601(a)).

Dated: January 13, 1981.

**Douglas M. Costle,**

*Administrator.*

It is proposed that §§ 60.13, 60.46, and 60.47a, Appendix A, and Appendix B of 40 CFR Part 60 be amended as follows:

1. By revising § 60.13(b), 60.13(c)(2)(ii), and 60.13(d), by removing subparagraphs (1), (2), and (3) of § 60.13(b), and by removing subparagraphs (1), (2), and (3) of § 60.13(d) as follows:

**§ 60.13 Monitoring requirements.**

* * * * *

(b) All continuous monitoring systems and monitoring devices shall be installed and operational prior to conducting performance tests under § 60.8. Verification of operational status shall, as a minimum, include completion of the manufacturer's written requirements or recommendations for installation, operation, and calibration of the device.

(c) * * *

(2) * * *

(ii) Continuous monitoring systems for measurement of nitrogen oxides or sulfur dioxide shall be capable of meas. ring emission levels within ±20 perce with a confidence level of 95 perce The performance tests and calcula ion procedures set forth in Performance Specification 2 of Appendix B shall be used for demonstrating compliance with this specification.

* * * * *

(d) Owners and operators of all continuous emission monitoring systems installed in accordance with the provisions of this part shall check the zero and span drift at least once daily in accordance with the method prescribed by the manufacturer of such systems unless the manufacturer recommends adjustments at shorter intervals in which case such recommendations shall be followed. The zero and span shall, as a minimum, be adjusted whenever the 24-hour zero drift of 24-hour span drift limits of the applicable performance specifications in Appendix B are exceeded. The amount of excess zero and span drift measured at the 24-hour interval checks shall be quantified and recorded. For continuous monitoring systems measuring opacity of emissions, the optical surfaces exposed to the effluent gases shall be cleaned prior to performing the zero and span drift adjustments except that for systems using automatic zero adjustments, the optical surfaces shall be cleaned when the cumulative automatic zero compensation exceeds 4 percent opacity. Unless otherwise approved by the Administrator, the following procedures shall be followed for continuous monitoring systems measuring opacity of emissions. Minimum procedures shall include a method for producing a simulated zero opacity condition and an upscale(span) opacity condition using a certified neutral density filter or other related technique to produce a known obscuration of the light beam. Such procedures shall provide a system check of the analyzer internal optical surfaces and all electronic circuitry including the lamp and photodetector assembly.

* * * * *

2. By revising § 60.46(a)(4) as follows:

**§ 60.46 Test methods and procedures.**

(a) * * *

(4) Method 6 for concentration of $SO_2$. Method 6A may be used whenever Methods 6 and 3 data are used to determine the $SO_2$ emission rate in ng/J, and

* * * * *

3. By revising § 60.47a(h)(1) as follows:

**§ 60.47a Emission monitoring.**

* * * * *

(h) * * *

(1) Reference Methods 3, 6, and 7 as applicable, are used. Method 6B may be used whenever Methods 6 and 3 data are used to determine the $SO_2$ emission rate in ng/J. The sampling location(s) are the same as those used for the continuous monitoring system.

* * * * *

4. By adding to Appendix A of 40 CFR Part 60 two new methods, Methods 6A and Method 6B, to read as follows:

**Appendix A—Reference Test Methods**

* * * * *

*Method 6A—Determination of Sulfur Dioxide, Moisture, and Carbon Dioxide Emissions from Fossil Fuel Combustion Sources*

1. *Applicability and Principle*

1.1 *Applicability.* This method applies to the determination of sulfur dioxide ($SO_2$) emissions from fossil fuel combustion sources in terms of concentration (mg/m$^3$) and in terms of emission rate (ng/J) and to the determination of carbon dioxide ($CO_2$) concentration (percent). Moisture, if desired, may also be determined by this method.

The minimum detectable limit, the upper limit, and the interferences of the method for the measurement of $SO_2$ are the same as for Method 6. For a 20-liter sample, the method has a precision of 0.5 percent $CO_2$ for concentrations between 2.5 and 25 percent $CO_2$ and 1.0 percent moisture for moisture concentrations greater than 5 percent.

1.2 *Principle.* The principle of sample collection is the same as for Method 6 except that moisture and $CO_2$ are collected in addition to $SO_2$ in the same sampling train. Moisture and $CO_2$ fractions are determined gravimetrically.

2. *Apparatus*

2.1 *Sampling.* The sampling train is shown in Figure 6A-1; the equipment required is the same as for Method 6, except as specified below:

2.1.1 *Midget Impingers.* Two 30-ml midget impingers with a 1-mm restricted tip.

2.1.2 *Midget Bubbler.* One 30-ml midget bubbler with an unrestricted tip.

2.1.3 $CO_2$ *Absorber.* One 250-ml Erlenmeyer bubbler with an unrestricted tip, or equivalent.

2.2 *Sample Recovey and Analysis.* The equipment needed for sample recovery and analysis is the same as required for Method 6. In addition, a balance to measure within 0.05 g is needed for analysis.

3. *Reagents*

Unless otherwise indicated, all reagents must conform to the specifications established by the Committee on Analytical Reagents of the American Chemical Society. Where such specifications are not available, use the best available grade.

3.1 *Sampling.* The reagents required for sampling are the same as specified in Method 6, except that 80 percent isopropanol and 10 percent potassium iodide solutions are not required. In addition, the following reagents are required:

BILLING CODE 6560-26-M

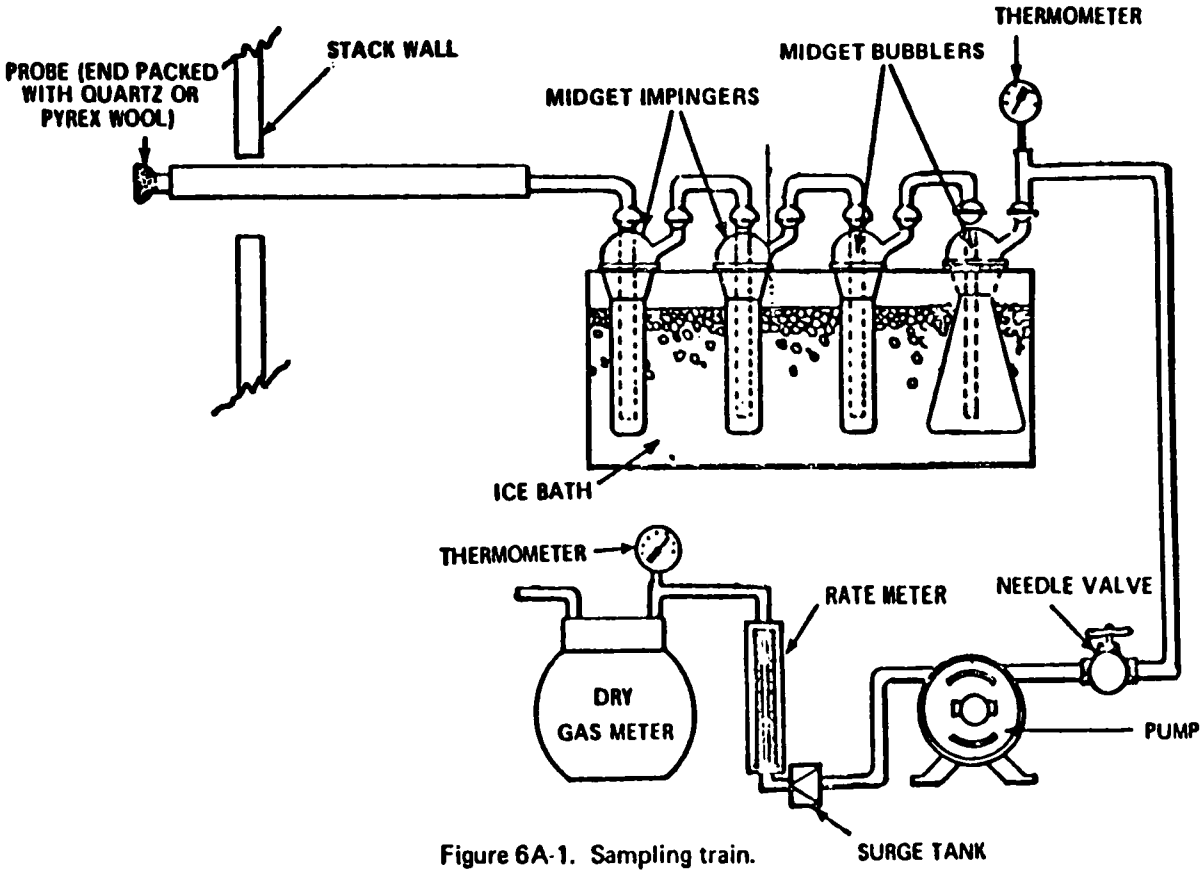


Figure 6A-1. Sampling train.

BILLING CODE 6560-26-C

3.1.1 *Drierite.*[*] Anhydrous calcium sulfate ($CaSO_4$) desiccant, 8 mesh.

3.1.2 *Ascarite.* Sodium hydroxide-coated asbestos for absorption of $CO_2$, 8 to 20 mesh.

3.2 *Sample Recovery and Analysis.* The reagents needed for sample recovery and analysis are the same as for Method 6, Sections 3.2 and 3.3, respectively.

4. *Procedure.*

4.1 *Sampling.*

4.1.1 *Preparation of Collection Train.* Measure 15 ml of 3 percent hydrogen peroxide into each of the first two midget impingers. Into the midget bubbler, place about 25 g of drierite. Clean the outsides of the impingers and the drierite bubbler and weigh (at room temperature, ~ 20° C) to the nearest 0.1 g. Weigh the three vessels simultaneously and record this initial mass.

Place a small amount of glass wool in the Erlenmeyer bubbler. The glass wool should cover the entire bottom of the flask and be about 1-cm thick. Place about 100 g of ascarite on top of the glass wool and carefully insert the bubbler top. Plug the bubbler exhaust leg and invert the bubbler to remove any ascarite fom the bubbler tube. A wire may be useful in assuring that no ascarite remains in the tube. With the plug removed and the outside of the bubbler cleaned, weigh (at room temperature (at room temperature, ~ 20° C), to the nearest 0.1 g. Record this initial mass.

Assemble the train as shown in Figure 6A-1. Adjust the probe heater to a temperature sufficient to prevent water condensation. Place crushed ice and water around the impingers and bubblers.

Note.—For stack gas streams with high particulate loadings, an in-stack or heated out-of-stack glass fiber mat filter may be used in place of the glass wool plug in the probe.

4.1.2 *Leak-Check Procedure and Sample Collection.* The leak-check procedure and sample collection procedure are the same as specified in Method 6, Sections 4.1.2 and 4.1.3, respectively.

4.2 *Sample Recovery.*

4.2.1 *Moisture Measurement.* Disconnect the peroxide impingers and the drierite bubbler from the sample train. Allow time (about 10 minutes) for them to reach room temperature, clean the outsides and then weigh them simultaneously in the same manner as in Section 4.1.1. Record this final mass.

4.2.2 *Peroxide Solution.* Pour the contents of the midget impingers into a leak-free polyethylene bottle for shipping. Rinse the two midget impingers and connecting tubes with deionized distilled water, and add the washings to the same storage container.

[*] Mention of trade names or specific products does not constitute endorsement by the U.S. Environmental Protection Agency.

4.2.3 *$CO_2$ Absorber.* Allow the Erlenmeyer bubbler to warm to room temperature (about 10 minutes), clean the outside, and weigh to the nearest 0.1 g in the same manner as in Section 4.1.1. Record this final mass and discard the used ascarite.

4.3 *Sample Analysis.* The sample analysis procedure for $SO_2$ is the same as specified in Method 6, Section 4.3.

5. *Calibration.*

The calibrations and checks are the same as required in Method 6, Section 5.

6. *Calculations.*

Carry out calculations, retaining at least 1 extra decimal figure beyond that of the acquired data. Round off figures after final calculation. The calculation nomenclature and procedure are the same as specified in Method 6 with the addition of the following:

6.1 Nomenclature.

$C_{H_2O}$ = Concentration of moisture, percent.

$C_{CO_2}$ = Concentration of $CO_2$, dry basis, percent.

$m_{wi}$ = Initial mass of peroxide impingers and drierite bubbler, g.

$m_{wf}$ = Final mass of peroxide impingers and drierite bubbler, g.

$m_{ai}$ = Initial mass of ascarite bubbler, g.

$m_{af}$ = Final mass of ascarite bubbler, g.

$V_{CO_2(std)}$ = Standard equivalent volume of $CO_2$ collected, dry basis, $m^3$.

6.2 $CO_2$ volume collected, corrected to standard conditions.

$$V_{CO_2(std)} = 5.467 \times 10^{-4} (m_{af} - m_{ai}) \quad \text{(Eq. 6A-1)}$$

6.3 Moisture volume collected, corrected to standard conditions.

$$V_{w(std)} = 1.336 \times 10^{-3} (m_{wf} - m_{wi}) \quad \text{(Eq. 6A-2)}$$

6.4 $SO_2$ concentration.

$$C_{SO_2} = 32.03 \frac{(V_t - V_{tb}) N \left(\frac{V_{soln}}{V_a}\right)}{V_{m(std)} + V_{CO_2(std)}} \quad \text{(Eq. 6A-3)}$$

6.5 $CO_2$ concentration.

$$C_{CO_2} = \frac{V_{CO_2(std)}}{V_{m(std)} + V_{CO_2(std)}} \times 100 \quad \text{(Eq. 6A-4)}$$

6.6 Moisture concentration.

$$C_{H_2O} = \frac{V_{H_2O(std)}}{V_{m(std)} + V_{H_2O(std)} + V_{CO_2(std)}} \quad \text{(Eq. 6A-5)}$$

7. *Emission Rate Procedure.*

If the only emission measurement desired is in terms of emission rate of $SO_2$ (ng/J), an abbreviated procedure may be used. The differences between Method 6A and the abbreviated procedure are described below.

7.1 *Sample Train.* The sample train is the same as shown in Figure 6A-1 and as described in Section 4, except that the dry gas meter is not needed.

7.2 *Preparation of the collection train.* Follow the same procedure as in Section 4.1.1, except that the peroxide impingers and drierite bubbler need not be weighed before or after the test run.

7.3 *Sampling.* Operate the train as described in Section 4.1.3, except that dry gas

meter readings, barometric pressure, and dry gas meter temperatures need not be recorded.

7.4 *Sample Recovery.* Follow the procedure in Section 4.2, except that the peroxide impingers and drierite bubbler need not be weighed.

7.5 *Sample Analysis.* Analysis of the peroxide solution is the same as described in Section 4.3.

7.6 Calculations.

7.6.1 $SO_2$ mass collected.

$$m_{SO_2} = 32.03\ (V_t - V_{tb})\ N\left(\frac{V_{soln}}{V_a}\right) \qquad \text{(Eq. 6A-7)}$$

Where:

$m_{SO_2}$ = Mass of $SO_2$ collected, mg.

7.6.2 Sulfur dioxide emission rate.

$$E_{SO_2} = F_c\ (1.829 \times 10^9)\ \frac{m_{SO_2}}{(m_{af} - m_{ai})} \qquad \text{(Eq. 6A-8)}$$

Where:

$E_{SO\mu}$ = Emission rate of $SO_2$, ng/J.

$F_c$ = Carbon F factor for the fuel burned, $m^3/J$, from Method 19.

8. *Bibliography*

8.1 Same as for Method 6, citations 1 through 8, with the addition of the following:

8.2 Stanley, Jon and P.R. Westlin. An Alternate Method for Stack Gas Moisture Determination. Source Evaluation Society Newsletter. *Volume 3, Number 4.* November 1978.

8.3 Whittle, Richard N. and P.R. Westlin. Air Pollution Test Report: Development and Evaluation of an Intermittent Integrated $SO_2/CO_2$ Emission Sampling Procedure. Environmental Protection Agency, Emission Standard and Engineering Division, Emission Measurement Branch. Research Triangle Park, North Carolina. December 1979. 14 pages.

*Method 6B—Determination of Sulfur Dioxide and Carbon Dioxide Daily Average Emissions From Fossil Fuel Combustion Sources*

1. *Applicability and Principle*

1.1 Applicability. This method applies to the determination of sulfur dioxide ($SO_2$) emissions form combustion sources in terms of concentration (mg/$M^3$) and emission rate (ng/J), and for the determination of carbon dioxide ($CO_2$) concentration (percent) on a daily (24 hours) basis.

The minimum detectable limit, upper limit, and the interferences for $SO_2$ measurements are the same as for Method 6. For a 20-liter sample, the method has a precision of 0.5 percent $CO_2$ for concentrations between 2.5 and 25 percent $CO_2$.

1.2 Principle. A gas sample is extracted from the sampling point in the stack intermittently over a 24-hour or other specified time period. Sampling may also be conducted continuously if the apparatus and procedure are modified (see the note in Section 4.1.1). The $SO_2$ and $CO_2$ are separated and collected in the sampling train. The $SO_2$ fraction is measured by the barium-thorin titration method and $CO_2$ is determined gravimetrically.

2. *Apparatus*

The equipment required for this method is the same as specified for Method 6A, Section 2, with the addition of an industrial timer-switch designed to operate in the "on" position from 3 to 5 continuous minutes and "off" the remaining period over a repeating, 2-hour cycle.

3. *Reagents*

All reagents for sampling and analysis are the same as described in Method 6A, Section 3.

4. *Procedure*

4.1 *Sampling*

4.1.1 *Preparation of Collection Train.* Preparation of the sample train is the same as described in Method 6A, Section 4.1.4 with the addition of the following:

Assemble the train as shown in Figure 6B-1. The probe must be heated to a temperature sufficient to prevent water condensation and must include a filter (either in-stack, out-of-stack, or both) to prevent particulate entrainment in the perioxide impingers. The electric supply for the probe heat should be continuous and separate from the timed operation of the sample pump.

Adjust the timer-switch to operate in the "on" position form 2 to 4 minutes on a 2-hour repeating cycle. Other timer sequences may be used provided there are at least 12 equal, evenly spaced periods of operation over 24 hours and the total sample volume is between 20 and 40 liters for the amounts of sampling reagents prescribed in this method.

Add cold water to the tank until the impingers and bubblers are covered at least two-thirds of their length. The impingers and bubbler tank must be covered and protected from intense heat and direct sunlight. If freezing conditions exist, the impinger solution and the water bath must be protected.

BILLING CODE 6560-26-M

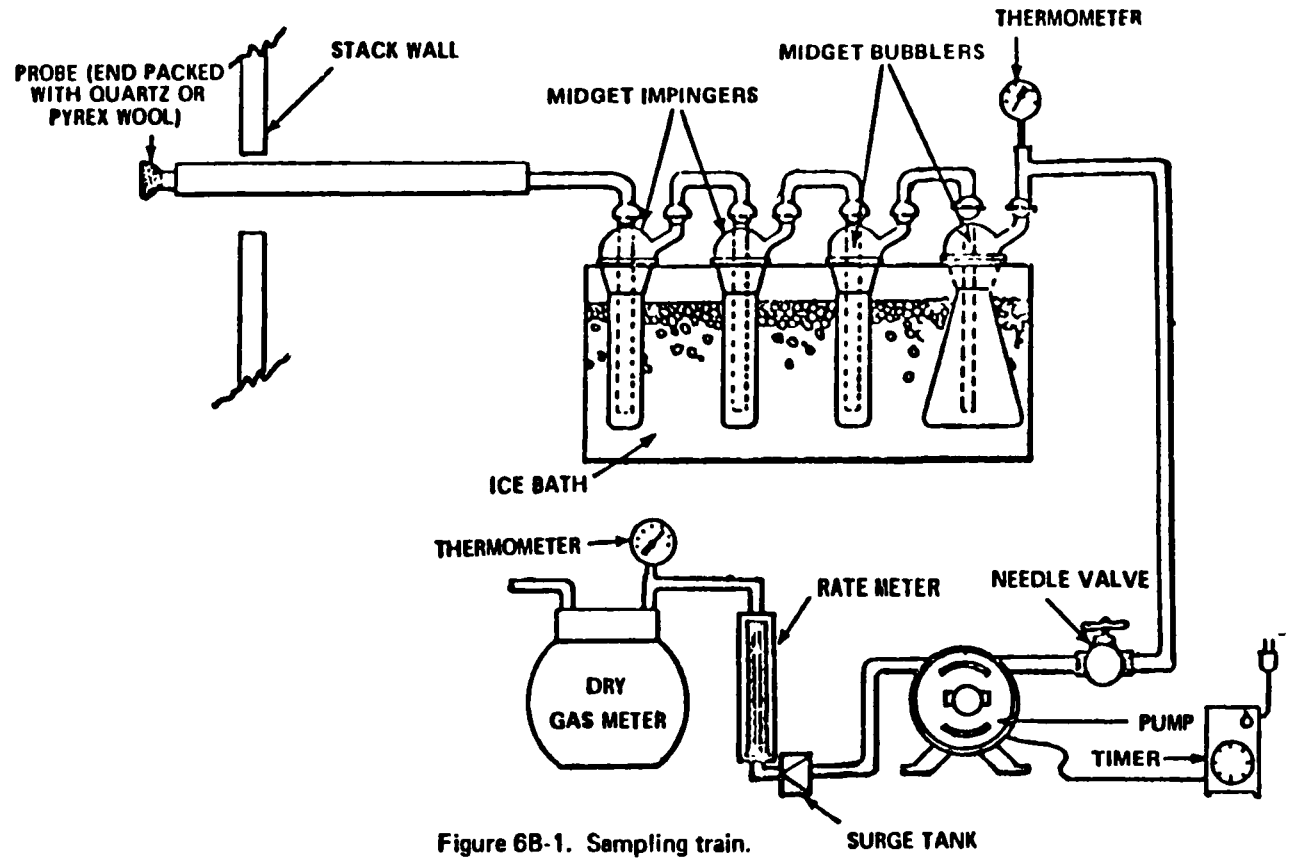


Figure 6B-1. Sampling train.

BILLING CODE 6560-26-C

Note.—Sampling may be conducted continuously if a low flow-rate sample pump (>24ml/min) is used. Then the timer-switch is not necessary. In addition, if the sample pump is designed for constant rate sampling, the rate meter may be deleted. The total gas volume collected should be between 20 and 40 liters for the amounts of sampling reagents prescribed in this method.

4.1.2 *Leak-Check Procedure.* The leak-check procedure is the same as describedf in Method 6, Section 4.1.2.

4.1.3 *Sample Collection.* Record the initial dry gas meter reading. To begin sampling, position the tip of the probe at the sampling point, connect the probe to the first impinger (or filter), and start the timer and the sample pump. Adjust the sample flow to a constant rate of approximately 1.0 liter/min as indicated by the rotameter. Assure that the timer is operating as intended, i.e., in the "on" position 3 to 5 minutes at 2-hour intervals, or other time interval specified.

During the 24-hour sampling period, record the dry gas meter temperature between 9:00 a.m. and 11:00 a.m., and the barometric pressure.

At the conclusion of the run, turn off the timer and the sample pump, remove the probe from the stack, and record the final gas meter volume reading. Conduct a leak check as described in Section 4.1.2. If a leak is found, void the test run or use procedures acceptable to the Administrator to adjust the sample volume for leakage. Repeat the steps in this Section (4.1.3) for successive runs.

4.2 *Sample Recovery.* The procedures for sample recovery (moisture measurement, peroxide solution, and ascarite bubbler) are the same as in Method 6A, Section 4.2.

4.3 *Sample Analysis.* Analysis of the peroxide impinger solutions is the same as in Method 6, Section 4.3.

5. *Calibration*

5.1 *Metering System.*

5.1.1 *Initial Calibration.* The initial calibration for the volume metering system is the same as for Method 6, Section 5.1.1.

5.1.2 *Periodic Calibration Check.* After 30 days of operation of the test train conduct a calibration check as in Section 5.1.1 above, except for the following variations: (1) The leak check is not be conducted, (2) three or more revolutions of the dry gas meter may be used, and (3) only two independent runs need be made. If the calibration factor does not deviate by more than 5 percent from the initial calibration factor determined in Section 5.1.1, then the dry gas meter volumes obtained during the test series are acceptable and use of the train can continue. If the calibration factor deviates by more than 5 percent, recalibrate the metering system as in Section 5.1.1; and for the calculations for the preceding 30 days of data, use the calibration factor (initial or recalibration) that yields the lower gas volume for each test run. Use the latest calibration factor for succeeding tests.

5.2 *Thermometers.* Calibrate against mercury-in-glass thermometers initially and at 30-day intervals.

5.3 *Rotameter.* The rotameter need not be calibrated, but should be cleaned and maintained according to the manufacturer's instruction.

5.4 *Barometer.* Calibrate against a mercury barometer initially and at 30-day intervals.

5.5 *Barium Perchlorate Solution.* Standardize the barium perchlorate solution against 25 ml of standard sulfuric acid to which 100 ml of 100 percent isopropanal has been added.

6. *Calculations*

The nomenclature and calculation procedures are the same as in Method 6A with the following exceptions:

$P_{bar}$ = Initial barometric pressure for the test period, mm Hg.

$T_m$ = Absolute meter temperature for the test period, °K.

7. *Emission Rate Procedure*

The emission rate procedure is the same as described in Method 6A, Section 7, except that the timer is needed and is operated as described in this method.

8. *Bibliography*

The bibliography is the same as described in Method 6A, Section 8.

* * * * *

5. By revising Performance 2 and Performance 3 of Appendix B of 40 CFR Part 60 to read as follows:

**Appendix B—Performance Specifications**

* * * * *

*Performance Specification 2—Specifications and Test Procedures for $SO_2$ and $NO_x$* Continuous Emission Monitoring Systems in Stationary Sources

1. *Applicability and Principle*

1.1 *Applicability.* This specification is to be used for evaluating the acceptability of $SO_2$ and $NO_x$ continuous emission monitoring systems (CEMS) after the initial installation and whenever specified in an applicable subpart of the regulations. The CEMS may include, for certain stationary sources, diluent ($O_2$ or $CO_2$) monitors.

1.2 *Principle.* Installation and measurement location specifications, performance and equipment specifications, test procedures, and data reduction procedures are included in this specification. Reference method (RM) tests and calibration drift tests are conducted to determine conformance of the CEMS with the specification.

2. *Definitions*

2.1 *Continuous Emission Monitoring System (CEMS).* The total equipment required for the determination of a gas concentration or emission rate. The system consists of the following major subsystems:

2.1.1 *Sample Interface.* That portion of the CEMS that is used for one or more of the following: Sample acquisition, sample transportation, and sample conditioning, or protection of the monitor from the effects of the stack effluent.

2.1.2 *Pollutant Analyzer.* That portion of the CEMS that senses the pollutant gas and generates an output that is proportional to the gas concentration.

2.1.3 *Diluent Analyzer (if applicable).* That portion of the CEMS that senses the diluent gas (e.g., $CO_2$ or $O_2$) and generates an output that is proportional to the gas concentration.

2.1.4 *Data Recorder.* That portion of the CEMS that provides a permanent record of the analyzer output. The data recorder may include automatic data reduction capabilities.

2.2 *Point CEMS.* A CEMS that measures the gas concentration either at a single point or along a path that is equal to or less than 10 percent of the equivalent diameter of the stack or duct cross section.

2.3 *Path CEMS.* A CEMS that mesures the gas concentration along a path that is greater than 10 percent of the equivalent diameter of the stack or duct cross section.

2.4 *Span Value.* The upper limit of a gas concentration measurement range that is specified for affected source categories in the applicable subpart of the regulations.

2.5 *Relative Accuracy (RA).* The absolute mean difference between the gas concentration or emission rate determined by the CEMS and the value determined by the reference method(s) plus the 2.5 percent error confidence coefficient of a series of tests divided by the mean of the reference method (RM) tests or the applicable emission limit.

2.6 *Calibration Drift (CD).* The difference in the CEMS output readings from the established reference value after a stated period of operation during which no unscheduled maintenance, repair, or adjustment took place.

2.7 *Centroidal Area.* A concentric area that is geometrically similar to the stack or duct cross section and is no greater than 1 percent of the stack or duct cross-sectional area

2.8 *Representative Results.* As defined by the RM test procedure outlined in this specification.

3. *Installation and Measurement Location Specifications*

3.1 *CEMS Installation and Measurement Location.* Install the CEMS at an accessible location where the pollutant concentration or emission rate measurements are directly representative or can be corrected so as to be representative of the total emissions from the affected facility. Then select representative measurement points or paths for monitoring such that the CEMS will pass the relative accuracy (RA) test (see Section 7). If the cause of failure to meet the RA test is determined to be the measurement location, the CEMS may be required to be relocated.

Suggested measurement locations and points or paths are listed below; other locations and points or paths may be less likely to provide data that will meet the RA requirements.

3.1.1 *CEMS Location.* It is suggested that the measurement location be at least two equivalent diameters downstream from the nearest control device or other point at which a change in the pollutant concentration or emission rate may occur and at least a half equivalent diameter upstream from the effluent exhaust.

3.1.2 *Point CEMS.* It is suggested that the measurement point be (1) no less than 1.0 meter from the stack or duct wall, or (2) within or centrally located over the centroidal area of the stack or duct cross section.

3.1.3 *Path CEMS.* It is suggested that the effective measurement path (1) be totally within the inner area bounded by a line 1.0 meter from the stack or duct wall, or (2) have at least 70 percent of the path within the inner 50 percent of the stack or duct cross-sectional area, or (3) be centrally located over any part of the centroidal area.

3.2 *RM Measurement Location and Traverse Points.* Select an RM measurement point that is accessible and at least two equivalent diameters downstream from the nearest control device or other point at which a change in the pollutant concentration or emission rate may occur and at least a half equivalent diameter upstream from the effluent exhaust. The CEMS and RM locations need not be the same.

Then select traverse points that assure acquisition of representative samples over the stack or duct cross section. The minimum requirements are as follows: Establish a "measurement line" that passes through the centroidal area. If this line interferes with the CEMS measurements, displace the line up to 30 cm (or 5 percent of the equivalent diameter of the cross section, whichever is less) from the centroidal area. Locate three traverse points at 16.7, 50.0, and 83.3 percent of the measurement line. If the measurement line is longer than 2.4 meters, the three traverse points may be located on the line at 0.4, 1.2, and 2.0 meters from the stack or duct wall. The tester may select other traverse points, provided that they can be shown to the satisfaction of the Administrator to provide a representative sample over the stack or duct cross section. Conduct all necessary RM tests within 3 cm (but no less than 3 cm from the stack or duct wall) of the traverse points.

4. *Performance and Equipment Specifications*

4.1 *Instrument Zero and Span.* The CEMS recorder span must be set at 90 to 100 percent of recorder full-scale using a span level of 90 to 100 percent of the span value (the Administrator may approve other span levels). The CEMS design must also allow the determination of calibration drift at the zero and span level points on the calibration curve. If this is not possible or is impractical, the design must allow these determinations to be conducted at a low-level (0 to 50 percent of span value) point and at a high-level (80 to 100 percent of span value) point. In special cases, if not already approved, the Administrator may approve a single-point calibration-drift determination.

4.2 *Calibration Drift.* The CEMS calibration must not drift or deviate from the reference value of the gas cylinder, gas cell, or optical filter by more than 2.5 percent of the span value. If the CEMS includes pollutant and diluent monitors, the calibration drift must be determined separately for each in terms of concentrations (see Performance Specification 3 for the diluent specifications).

4.3 *CEMS Relative Accuracy.* The RA of the CEMS must be no greater than 20 percent of the mean value of the RM test data in terms of the units of the emission standard or 10 percent of the applicable standard, whichever is greater.

5. *Performance Specification Test Procedure*

5.1 *Pretest Preparation.* Install the CEMS and prepare the RM test site according to the specifications in Section 3, and prepare the CEMS for operation according to the manufacturer's written instructions.

5.2 *Calibration Drift Test Period.* While the affected facility is operating at more than 50 percent capacity, or as specified in an applicable subpart, determine the magnitude of the calibration drift (CD) once each day (at 24-hour intervals) for 7 consecutive days according to the procedure given in Section 6. To meet the requirement of Section 4.2, none of the CD's must exceed the specification.

5.3 *RA Test Period.* Only after the CEMS passes the CD test, conduct the RA test according to the procedure given in Section 7 while the affected facility is operating at more than 50 percent capacity, or as specified in an applicable subpart. To meet the specifications, the RA must be equal to or less than 20 percent or 10 percent of the applicable standard, whichever is greater. For instruments that use common components to measure more than one effluent gas constituent, all channels must simultaneously pass the RA requirement, unless it can be demonstrated that any adjustments made to one channel did not affect the others.

6. *CEMS Calibration Drift Test Procedure*

The CD measurement is to verify the ability of the CEMS to conform to the established CEMS calibration used for determining the emission concentration or emission rate. Therefore, if periodic automatic or manual adjustments are made to the CEMS zero and/or calibration settings, conduct the CD test immediately before these adjustments.

Conduct the CD test at the two points specified in Section 4.1. Introduce to the CEMS the reference gases, gas cells, or optical filters (these need not be certified). Record the CEMS response and subtract this value from the reference value (see example data sheet in Figure 2-1).

If an increment addition procedure is used to calibrate the CEMS, a single-point CD test may be used as follows: Use an increment cell or calibration gas ith a value that will provide a total CEMS response (i.e., stack plus cell concentrations) between 80 and 95 percent of the span value. Compare the difference between the measured CEMS response and the expected CEMS response with the increment value to establish the CD.

BILLING CODE 6560-26-M

| | Day | Date and time | Calibration value | Monitor value | Difference |
|---|---|---|---|---|---|
| Low-level | | | | | |
| | | | | | |
| | | | | | |
| | | | | | |
| | | | | | |
| | | | | | |
| | | | | | |
| High-level | | | | | |
| | | | | | |
| | | | | | |
| | | | | | |
| | | | | | |
| | | | | | |
| | | | | | |

Figure 2-1. Calibration drift determination.

BILLING CODE 6560-26-C

*Relative Accuracy Test Procedure*

7.1 *Sampling Strategy for RM Tests.* Conduct the RM tests such that they will yield results representative of the emissions from the source and can be correlated to the CEMS data. Although it is preferable to conduct the diluent (if applicable), moisture (if needed), and pollutant measurements simultaneously, the diluent and moisture measurements that are taken within a 30- to 60-minute period, which includes the pollutant measurements, may be used to calculate dry pollutant concentration and emission rate.

In order to correlate the CEMS and RM data properly, mark the beginning and end of each RM test period of each run (including the exact time of the day) on the CEMS chart recordings or other permanent record of output. Use the following strategies for the RM tests:

7.1.1 For integrated samples, e.g., Method 6 and Method 4, make a sample traverse of at least 21 minutes, sampling for 7 minutes at each traverse point.

7.1.2 For grab samples, e.g., Method 7, take one sample at each traverse point, scheduling the grab samples so that they are taken simultaneously (within a 3-minute period) or are an equal interval of time apart over a 21-minute (or less) period.

Note.—At times, CEMS RA tests are conducted during NSPS performance tests. In these cases, RM results obtained during CEMS RA tests may be used to determine compliance as long as the source and test conditions are consistent with the applicable regulations.

7.2 *Correlation of RM and CEMS Data.* Correlate the CEMS and the RM test data as to the time and duration by first determining from the CEMS final output (the one used for reporting) the integrated average pollutant concentration or emission rate for each pollutant RM test period. Consider system response time, if important, and confirm that the pair of results are on a consistent moisture, temperature, and diluent concentration basis. Then, compare each integrated CEMS value against the corresponding average RM value. Use the following guidelines to make these comparisons.

7.2.1 If the RM has an integrated sampling technique, make a direct comparison of the RM results and CEMS integrated average value.

7.2.2 If the RM has a grab sampling technique, first average the results from all grab samples taken during the test run and then compare this average value against the integrated value obtained from the CEMS chart recording during the run.

7.3 *Number of RM Tests.* Conduct a minimum of nine sets of all necessary RM tests. For grab samples, e.g., Method 7, a set is made up of at least three separate measurements. Conduct each set within a period of 30 to 60 minutes.

Note.—The tester may choose to perform more than nine sets of RM tests. If this option is chosen, the tester may, at his descretion, reject a maximum of three sets of the test results so long as the total number of test results used to determine the relative accuracy is greater than or equal to nine, but he must report all data including the rejected data.

7.4 *Reference Methods.* Unless otherwise specified in an applicable subpart of the regulations, Methods 6, 7, 3, and 4, or their approved alternatives, are the reference methods for $SO_2$, $NO_x$, diluent ($O_2$ or $CO_2$), and moisture, respectively.

7.5 *Calculations.* Summarize the results on a data sheet; an example is shown in Figure 2-2. Calculate the mean of the RM values. Calculate the arithmetic differences between the RM and the CEMS output sets.

| Run No. | Date and time | $SO_2$ | | | $NO_x$[b] | | | $CO_2$ or $O_2$[a] | | $SO_2$[a] | | | $NO_x$[a] | | |
|---|---|---|---|---|---|---|---|---|---|---|---|---|---|---|---|
| | | RM | M | Diff | RM | M | Diff | RM | M | RM | M | Diff | RM | M | Diff |
| | | ppm[c] | | | ppm[c] | | | %[d] | %[d] | mass/GCV | | | mass/GCV | | |
| 1 | | | | | | | | | | | | | | | |
| 2 | | | | | | | | | | | | | | | |
| 3 | | | | | | | | | | | | | | | |
| 4 | | | | | | | | | | | | | | | |
| 5 | | | | | | | | | | | | | | | |
| 6 | | | | | | | | | | | | | | | |
| 7 | | | | | | | | | | | | | | | |
| 8 | | | | | | | | | | | | | | | |
| 9 | | | | | | | | | | | | | | | |
| 10 | | | | | | | | | | | | | | | |
| 11 | | | | | | | | | | | | | | | |
| [illegible] | | | | | | | | | | | | | | | |
| Average | | | | | | | | | | | | | | | |
| Confidence Interval | | | | | | | | | | | | | | | |
| Accuracy[c] | | | | | | | | | | | | | | | |

[a] For steam generators; [b] Average of three samples; [c] Make sure that RM and M data are on a consistent basis, either wet or dry.

Figure 2-2. Relative accuracy determination.

BILLING CODE 6560-30-C

Then calculate the mean of the difference, standard deviation, confidence coefficient, and CEMS RA, using Equations 2-1, 2-2, 2-3, and 2-4.

8. *Equations*

8.1 *Arithmetic Mean.* Calculate the arithmetic mean of the difference, d, of a data set as follows:

$$\bar{d} = \frac{1}{n} \sum_{i=1}^{n} d_i \qquad \text{(Eq. 2-1)}$$

Where:

n = Number of data points.

$\sum_{i=1}^{n} d_i$ = Algebraic sum of the individual differences, $d_i$.

When the mean of the differences of pairs of data is calculated, be sure to correct the data for moisture, if applicable.

BILLING CODE 6560-26-M

8.2 *Standard Deviation.* Calculate the standard deviation $S_d$ as follows:

$$S_d = \sqrt{\frac{\sum_{i=1}^{n} d_i^2 - \frac{(\sum_{i=1}^{n} d_i)^2}{n}}{n-1}} \qquad \text{(Eq. 2-2)}$$

8.3 *Confidence Coefficient.* Calculate the 2.5 percent error confidence coefficient (one-tailed) CC as follows:

$$CC = t_{0.975} \frac{S_d}{\sqrt{n}} \qquad \text{(Eq. 2-3)}$$

Where:

$t_{0.975}$ = t-values (see Table 2-1)

Table 2-1. t-VALUES

| n[a] | $t_{0.975}$ | n[a] | $t_{0.975}$ | n[a] | $t_{0.975}$ |
|---|---|---|---|---|---|
| 2 | 12.706 | 7 | 2.447 | 12 | 2.201 |
| 3 | 4.303 | 8 | 2.365 | 13 | 2.179 |
| 4 | 3.182 | 9 | 2.306 | 14 | 2.160 |
| 5 | 2.776 | 10 | 2.262 | 15 | 2.145 |
| 6 | 2.571 | 11 | 2.228 | 16 | 2.131 |

[a] The values in this table are already corrected for n-1 degrees of freedom. Use n equal to the number of individual values.

8.4 *Relative Accuracy.* Calculate the RA of a set of data as follows:

$$RA = \frac{|\bar{d}| + |CC|}{\overline{RM}} \times 100 \qquad \text{(Eq. 2-4)}$$

Where:

$|\bar{d}|$ = Absolute value of the mean of differences (from Equation 2-1).

$|CC|$ = Absolute value of the confidence coefficient (from Equation 2-3).

$\overline{RM}$ = Average RM value or applicable standard.

9. *Reporting*

At a minimum (check with the appropriate regional office, or State or local agency for additional requirements, if any) summarize in tabular form the calibration drift tests and the RA tests. Include all data sheets, calculations, and charts (record of data outputs) that are necessary to substantiate that the performance CEMS met the performance specification.

10. *Bibliography*

10.1 "Experimental Statistics," Department of Commerce, Handbook 91, 1963, pp. 3-31, paragraphs 3-3.1.4.

*Performance Specification 3—Specifications and Test Procedures for $O_2$ and $CO_2$ Continuous Emission Monitoring Systems in Stationary Sources*

1. *Applicability and Principle*

1.1 *Applicability.* This specification is to be used for evaluating the acceptability of $O_2$ and $CO_2$ continuous emission monitoring systems (CEMS) after initial installation and whenever specified in an applicable subpart of the regulations. The specification applies to $O_2$ and $CO_2$ monitors that are not included under Performance Specification 2.

The definitions, installation measurement location specifications, test procedures, data reduction procedures, reporting requirements, and bibliography are the same as in Performance Specification 2, Sections 2, 3, 5, 6, 8, 9, and 10, and also apply to $O_2$ and $CO_2$ CEMS under this specification. The performance and equipment specifications and the relative accuracy (RA) test procedures for $O_2$ and $CO_2$ CEMS differ from $SO_2$ and $NO_x$ CEMS, unless otherwise noted, and are therefore included here.

1.2 *Principle.* Reference method (RM) tests and calibration drift tests are conducted to determine conformance of the CEMS with the specification.

2. *Performance and Equipment Specifications*

2.1 *Instrument Zero and Span.* This specification is the same as Section 4.1 of Performance Specification 2.

2.2 *Calibration Drift.* The CEMS calibration must not drift by more than 0.5 percent $O_2$ or $CO_2$ from the reference value of the gas, gas cell, or optical filter.

2.3 *CEMS Relative Accuracy.* The RA of the CEMS must be no greater than 20 percent of the mean value of the RM test data or 1.0 percent $O_2$ or $CO_2$, whichever is greater.

3. *Relative Accuracy Test Procedure*

3.1 *Sampling Strategy for RM Tests, correlation of RM and CEMS data, Number of RM Tests, and Calculations.* This is the same as Performance Specification 2, Sections 7.1, 7.2, 7.3, and 7.5, respectively.

3.2 *Reference Method.* Unless otherwise specified in an applicable subpart of the regulations, Method 3 of Appendix A or any approved alternative is the reference method for $O_2$ or $CO_2$.

(Sec. 114, Clean Air Act, as amended (42 U.S.C. 7414))

[FR Doc. 81-2837 Filed 1-23-81; 8:45 am]

BILLING CODE 6560-26-M

**ENVIRONMENTAL PROTECTION AGENCY**

**40 CFR Part 60**

**[AD-FRL 1715-Y]**

## Standards of Performance for New Stationary Sources: Continuous Monitoring Performance Specifications; Proposed Revisions to General Provisions

**AGENCY:** Environmental Protection Agency (EPA).

**ACTION:** Proposed rule and notice of public hearing.

**SUMMARY:** On February 23, 1978 (43 FR 7568) the Environmental Protection Agency promulgated standards of performance for new or modified kraft pulp mills pursuant to Section 111 of the Clean Air Act as amended. The standards require a continuous emission monitoring system (CEMS) to monitor total reduced sulfur (TRS) for operation and maintenance purposes. However, at the time the standards were promulgated performance specifications for the monitors had not been completed and monitoring requirements were not to be effective until their completion. The specifications proposed herein complete the performance specifications. In addition, changes to the general monitoring requirements of Section 60.13 are proposed.

A public hearing will be held, if requested, to provide interested persons an opportunity for oral presentation of data, views or arguments concerning the proposed performance specification and changes to Section 60.13.

**DATES:**

*Comments.* Comments must be received on or before September 18, 1981.

*Public Hearing.* If requested, a public hearing will be held. Persons wishing to present oral testimony must contact EPA by August 10, 1981. If a hearing is requested, an announcement of the date and place will appear in a separate **Federal Register** notice.

**ADDRESS:**

*Comments.* Comments should be submitted (in duplicate if possible) to: Central Docket Section (A-130), Attention: Docket Number A-80-57, U.S. Environmental Protection Agency, 401 M Street S.W., Washington, D.C. 20460.

*Public Hearing.* Persons wishing to present oral testimony should notify Mrs. Naomi Durkee, Office of the Director, Emission Standards and Engineering Division (MD-13), U.S. Environmental Protection Agency,

Research Triangle Park, North Carolina 27711, telephone number (919) 541-5571.

*Docket.* Docket No. A-80-57, containing material relevant to this rulemaking, is available for public inspection and copying between 8:00 a.m. and 4:00 p.m., Monday through Friday, at EPA's Central Docket Section, West Tower Lobby, Gallery 1, Waterside Mall, 401 M Street, S.W., Washington, D.C. 20460. A reasonable fee may be charged for copying.

**FOR FURTHER INFORMATION CONTACT:** Mr. Roger Shigehara, Emission Measurement Branch, Emission Standards and Engineering Division (MD-19), U.S. Environmental Protection Agency, Research Triangle Park, North Carolina 27711, telephone number (919) 541-2237.

**SUPPLEMENTARY INFORMATION:** On February 23, 1978 (43 FR 7568), the Environmental Protection Agency promulgated standards of performance for new or modified kraft pulp mills pursuant to Section 111 of the Clean Air Act as amended. The regulation requires new kraft pulp mills to demonstrate compliance with the standards of performance by means of performance tests at the time the new source commences operation or shortly thereafter. To insure that these sources, including associated air pollution control equipment, would be properly operated and maintained (to insure the intent of the standards to reduce air pollution), provisions were included that require several monitoring systems to continuously monitor emission levels. One of those monitoring systems was for total reduced sulfur (TRS).

At the time the standards, which included these monitoring requirements, were initially proposed, EPA and the kraft pulp mill industry were engaged in developing performance specifications for TRS monitoring systems. The performance specifications were not completed by the time the standards of performance were promulgated; therefore, the monitoring requirements were not to be effective until a joint EPA-industry effort to develop performance specifications was completed.

In October of 1977, the National Council of the Pulp and Paper Industry for Air and Stream Improvement submitted a technical assessment study to EPA. The results of a month-long evaluation of the performance of existing TRS monitors and a comparison with Method 16 data were included in this study. This study serves as the technical background for the performance specification proposed today.

The specification requires that monitors used to measure TRS be installed and ensured to operate properly. Calibration drift and relative accuracy tests are to be conducted to determine conformance of the continuous emission monitoring systems (CEMS) with the specification. Candidate monitors include the coulometric titrator, flame photometric and photoionization detectors, and others, fitted with appropriate sample extraction and conditioning equipment. A document has been prepared to provide vendors and operators with guidelines for performance and equipment specifications and suggested test and data reduction procedures for evaluating the CEMS. This guideline document is available from Mr. Foston Curtis, Mail Drop 19, Environmental Protection Agency, Research Triangle Park, North Carolina 27711, (919) 541-2237. During the development of the TRS performance specification, a question arose concerning the possibility that the CEMS might be the same as Reference Method 16. The question concerns whether such systems should be exempted from the relative accuracy test because it would involve comparing a reference method against an automated reference method. Comments are requested on this question.

As discussed in the preamble to the final rule which established the standards of performance for kraft pulp mills (43 FR 7571), installation of continuous monitoring systems is not needed until promulgation of applicable performance specifications. Sections 60.13(a) of Title 40 indicates that continuous monitoring systems must comply with the monitoring requirements upon promulgation unless otherwise specified in an applicable subpart or by the Administrator.

When Performance Specification 5 is promulgated, the Administrator could decide if any delay in complying with the monitoring requirements after promulgation is warranted for kraft pulp mills which are already affected by the standards. However, notice of these requirements is being given with today's proposal. The time between proposal and promulgation is usually about one year. The time before promulgation should allow kraft pulp mills to initiate purchasing and installig a continuous monitoring system. A delay beyond promulgation similar to the 180 days allowed for performance tests (40 CFR 60.8) is considered reasonable. However, in certain cases, additional time may be required for kraft pulp mills which are already affected by the standards. The Administrator plans to specify additional delays as set forth in 40 CFR 60.13(a) based on the expected time a source already affected by the standards would need to review available monitors, to purchase a monitor, to install the monitor, and to place the monitor into operation. Comments concerning the 180-day delay and additional delays are specifically requested.

The costs asociated with continuous monitoring are difficult to asess because costs will vary from source-to-source depending on the variations in the requirements for each installation, e.g., procurement, shipping, site preparation, and physical installation of the instrument system. However, for TRS monitoring systems, the normal costs of procurement are in the range of $15,000 to $30,000. The installation and testing costs required by Performance Specification 5 are approximately $3600 (30 man-days at $15 per hour).

During preparation of this performance specification, consistency with the existing monitoring requirements of 40 CFR 60.13 was checked. These existing monitoring requirements provide a general basis for continuous monitoring requirements found in standards of performance for new sources, such as the standards for kraft pulp mills. One minor inconsistency was found in paragraph 60.13(e). Because TRS was not mentioned in this paragraph, a revision to the paragraph is being proposed to make the paragraph apply to TRS and other emissions. In addition to this minor inconsistency, several paragraphs which are no longer applicable were found. These paragraphs were effective only until September 11, 1979. Therefore, to update and reduce the complexity of 40 CFR 60.13, it is proposed that the parts of paragraphs 60.13(a), 60.13(c), and 60.13(e) which are no longer applicable be removed from 40 CFR 60.13.

Pursuant to the provisions of 5 U.S.C Section 605(b), I hereby certify that the attached rule will not, if promulgated, have a significant economic impact on a substantial number of small entities. About two-thrids of the businesses owning kraft pulp mills are also engaged in other activities, such as chemical manufacture, detergent production, land development and can production. In addition, businesses owning kraft pulp mills but not engaged in these activities are almost always engaged in the production of timber or paperboard. Because most businesses owning kraft pulp mills are engaged in activities other

than kraft pulping, very few small entities, as defined in 13 CFR Part 121, could be impacted by this rule. Thus, the attached rule will not, if promulgated, have a significant economic impact on a substantial number of small entities.

I have reviewed this proposed rule to determine if it is a major rule as defined in Executive Order 12291 (46 FR 18193). The costs of procurement and installation, as indicated above, do not indicate that this rule would result in an annual effect of $100 million or more, a major increase in costs or prices, or other significant adverse effects. Thus, I have determined that this rule is not a major rule.

This regulation was submitted to the Office of Management and Budget for review as required by Executive Order 12291.

This notice of proposed rulemaking is issued under the authority of Sections 111, 114, and 301(a) of the Clean Air Act as amended (42 U.S.C. 7411, 7414, and 7601(a)).

Dated: July 6, 1981.

**Anne M. Gorsuch,**

*Administrator.*

It is proposed that § 60.13 and Appendix B of 40 CFR Part 60 be amended as follows:

1. By revising § 60.13(a), 60.13(c), and 60.13(e); by removing subparagraphs (1) and (2) of § 60.13(a); by removing subparagraphs (1), (2), and (3), of § 60.13(c); and by removing subparagraph (3) of § 60.13(e) as follows:

## Subpart A—General Provisions

* * * * *

### § 60.13 Monitoring requirements.

* * * * *

(a) For the purposes of this section, all caontinuous monitoring systems required under applicable subparts shall be subject to the provisions of this section upon promulgation of performance specifications for continuous monitoring systems under Appendix B to this part, unless otherwise specified in an applicable subpart or by the Administrator.

* * * * *

(c) During any performance tests required under § 60.8 or within 30 days thereafter and at such other times as may be required by the Administrator under Section 114 of the Act, the owner or operator of any affected facility shall conduct continuous monitoring system performance evaluations and furnish the Administrator within 60 days thereof two or, upon request, more copies of a written report of the results of such tests. These continuous monitoring system performance evaluations shall be conducted in accordance with the requirements and procedures contained in the applicable performance specification of Appendix B.

* * * * *

(e) Except for system breakdowns, repairs, calibration checks, and zero and span adjustments required under paragraph (d) of this section, all continuous monitoring systems shall be in continuous operation and shall meet minimum frequency of operation requirements as follows:

(1) All continuous monitoring systems referenced by paragraph (c) of this section for measuring opacity of emissions shall complete a minimum of one cycle of sampling and analyzing for each successive 10-second period and one cycle of data recording for each successive 6-minute period.

(2) All continuous monitoring systems referenced by paragraph (c) of this section for measuring emissions, except opacity, shall complete a minimum of one cycle of operation (sampling, analyzing, and data recording) for each successive 15-minute period.

* * * * *

2. By adding Performance Specification 5 to Appendix B of 40 CFR Part 60 as follows:

## Appendix B—Performance Specifications

* * * * *

### Performance Specification 5—Specifications and Test Procedures for TRS Continuous Emission Monitoring Systems in Stationary Sources

*1. Applicability and Principle*

1.1 Applicability. This specification is to be used for evaluating the acceptability of total reduced sulfur (TRS) continuous emission monitoring systems (CEMS) after initial installation and whenever specified in an applicable subpart of the regulations. The CEMS may include $O_2$ monitors.

The definitions, installation specifications, test procedures, data reduction procedures for determining calibration drifts and relative accuracy, and reporting of Performance Specification 2.[1] Sections 2, 3, 4, 5, 6, 8, and 9 also apply to this specification and must be consulted. The performance and equipment specifications do not differ from Performance Specification 2 except as listed below and are included in this specification.

1.2 Principle. Calibration drift and relative accuracy tests are conducted to determine conformance of the CEMS with the specification.

*2. Performance and Equipment Specifications*

2.1 Instrument Zero and Span. The CEMS recorder span must be set at 90 to 100 percent of recorder full-scale using a span level of 90 to 100 percent of the span value (other span levels may be used with the approval of the Administrator). The CEMS design shall also allow the determination of calibration at the zero and span level points of the calibration curve. If this is not possible or is impractical, these determinations may be conducted at a low level (up to 20 percent of span value) point and at a high level (80 to 100 percent of span value) point. The components of an acceptable permeation tube system are listed on pages 87–94 of Citation 2 of the bibliography.

2.2 Calibration Drift. The CEMS calibration must not drift or deviate from the reference value of the calibration gas by more than 3 percent of the established span value of 30 ppm. If the CEMS includes pollutant and diluent monitors, the calibration drift must be determined separately for each in terms of concentrations (see Performance Specification 3 for the diluent specifications).

2.3 CEMS Relative Accuracy (RA). The RA of the CEMS shall be no greater than 20 percent of the mean value of the reference method (RM) test data in terms of the units of the emission standard or 10 percent of the applicable standard, whichever is greater.

*3. Relative Accuracy Test Procedure*

3.1 Sampling Strategy for RM Tests, Correlation of RM and CEMS Data, Number of RM Tests, and Calculations. This is the same as Performance Specification 2, Sections, 7.1, 7.2, 7.3, and 7.5, respectively.

3.2 Reference Methods. Unless otherwise specified in an applicable subpart of the regulations, Method 16, Method 16A, or other approved alternative, shall be the reference method for TRS. Note: For Method 16, a set is made up of at least three separate injects equally spaced over time.

*4. Bibliography*

4.1 "Experimental Statistics," Department of Commerce, Handbook 91, 1963 pp. 3–31, paragraphs 3–3.1.4.

4.2 "A Guide to the Design, Maintenance and Operation of TRS Monitoring Systems," National Council for Air and Stream Improvement Technical Bulletin No. 89, September 1977.

4.3 "Observation of Field Performance of TRS Monitors on a Kraft Recovery Furnace," National Council for Air and Stream Improvement Technical Bulletin No. 91, January 1978.

[1] All references to Performance Specification 2 are to the one proposed on January 26, 1981 (46 FR 8352).

[FR Doc. 81-21084 Filed 7-17-81; 8:45 am]

BILLING CODE 6560-26-M

**40 CFR Part 60**

**[LCE FRL-1921-1]**

## Alternate Method 1 to Reference Method 9 of Appendix A—Determination of the Opacity of Emissions From Stationary Sources Remotely by Lidar; Addition of Alternate Method

**AGENCY:** Environmental Protection Agency (EPA).

**ACTION:** Final rule.

**SUMMARY:** EPA is amending its regulations to establish an Alternate Method 1 to Reference Method 9 of Appendix A of 40 CFR Part 60. This alternate method employs a lidar (laser radar) for the nonsubjective determination of the opacity of visible emissions from stationary sources. It will be used during nighttime hours as it is during the day. The use of Reference Method 9 is restricted to daylight.

The effect of this rulemaking is to allow EPA, state and local agencies to use Alternate Method 1 (lidar) to enforce opacity standards in all cases where Reference Method 9 is now authorized. These cases include New Source Performance Standards codified in 40 CFR Part 60 and, pursuant to 40 CFR 52.12(c)(1), opacity standards in State Implementation Plans (SIPs) that do not specify any test procedure.

**EFFECTIVE DATE:** October 28, 1981.

**FOR FURTHER INFORMATION CONTACT:** Arthur W. Dybdahl, National Enforcement Investigations Center, U.S. Environmental Protection Agency, P.O. Box 25227, Denver, Colorado 80225, (303) 234-4658, FTS 234-4658.

**SUPPLEMENTARY INFORMATION:**

### Introduction

Lidar, an acronym for *Light Detection and Ranging*, was first applied to meteorological monitoring in 1963. Since that time lidar has been developed as a measurement technique for plume opacity, and today is approved as an alternate to Reference Method 9 which employs visible emissions observers.

Lidar contains its own unique light source (a laser transmitter which emits a short pulse of light) which enables it to measure the opacity of stationary source emissions during both day- and nighttime ambient lighting conditions. The optical receiver within the lidar collects the laser light backscattered (reflected) from the atmospheric aerosols before and beyond the visible plume as well as that from the aerosols (particulates) within the plume. The receiver's detector converts the backscatter optical signal into an electronic signal. Plume opacity is calculated from the backscatter signal data obtained from just before and beyond the plume.

### Background

During its development, Reference Method 9 was found to be influenced by the color contrast between a smoke plume and the background against which the plume is viewed by visible emissions observers. It was also influenced by the total ambient light (luminescence contrast) present. A plume is most visible and presents the greatest apparent opacity when viewed against a contrasting background (white plume viewed against a clear blue sky). Under conditions presenting a less contrasting background, the apparent opacity of a plume is less and approaches zero as the color contrast or the ambient light level decreases toward zero. An example is viewing a white-to-gray plume against a cloudy or hazy sky.

The measurement of smoke plume opacity with the lidar is independent of the color contrast conditions that exist between a plume and the respective background (clear sky, cloudy sky, terrain, etc.), and ambient lighting conditions. Lidar does not consider plume-to-background contrast in measuring plume opacity.

On July 1, 1980, EPA proposed the lidar technique in the Federal Register (45 FR 44329) as Alternate Method 1 to Reference Method 9 of Appendix A.

### Need for the Alternate Method

Persuasive considerations supporting EPA development and approval of the alternate (lidar) method include the following:

- Independence from ambient lighting conditions which allows opacity measurement during day- and nighttime hours;
- Objective measurement of a physical property (opacity) which is calibrated, and correlated with the reference method;
- Remote operation which neither interferes with nor disrupts the regulated public;
- Application of statistical techniques to assure high confidence levels in the data used for compliance determination.

### Difference From Proposed Method

The approved alternate method varies from its proposed form as published in

the July 1, 1980 Federal Register. The proposal was edited for clarity and brevity. Informative material (examples) and the mathematical derivations were moved into the technical support document, Reference 5.1. The final regulation is approximately two thirds of the proposal's length.

A list of definitions relating to lidar technology was placed in the first section. The selection of pick intervals was simplified to avoid ambiguity. The equation for the standard deviation was further derived and simplified to assure a high confidence level in the data that is used. Its definition and derivation are contained in the technical support document. The opacity concept is clearly identified and the terms "actual plume opacity" and "actual average plume opacity" are defined using lidar measurements. These opacities are correlated to the reference method. A more accurate azimuth angle correction equation was put into the regulation for converting the opacity values measured along the laser beam's slanted pathway through the plume to the opacity value of the plume cross section. The running average method was eliminated so that it would not be confused with any other applicable standard.

The design performance specifications for the lidar system were generalized and converted into affirmative requirements. This enables the construction and use of lidar systems with ruby or other lasers.

All recordkeeping requirements were changed to suggestions. EPA operators will follow these suggestions closely but others who design, build, or operate a lidar system will have no recordkeeping, reporting, or other paperwork obligations. This flexibility allows construction of lidar systems by those persons wanting to use the alternate method without imposing any additional regulatory burden upon the public.

Public Comments

The public comments received on the proposed regulation were individually examined by the EPA workgroup. Each comment was resolved and appropriate changes appear in today's regulation. All of these comments were generalized into the major topics which are discussed below. These include the application of lidar technology to the regulatory process and its applicability for measuring the opacity of emissions from a specific source. Several commentators examined the available literature or recounted their own experiences when they asked to see a correlation between the proposed method and the reference method. The results of this test also satisfied many of the theoretical and philosophical concerns. Safety concerns for the operators and the public were expressed. Comments were also received on how the system would operate, what degree of subjectivity the operators would have and the availability of equipment or operators. Legal concerns were directed to an inferred regulatory change and also to constitutional issues. The response to these comments is detailed below.

Public comments expressed a concern that the use of lidar for the remote measurement of emissions opacity from stationary sources was a premature application of experimental technology. EPA evaluated two decades of literature describing the development of lidar technology. The list of references in the technical support document demonstrates the careful agency consideration used to develop lidar into an alternate method for the remote measurement of opacity.

Several commentators indicated that the data derived from the application of the alternate method to a specific emission source might be stricter than data produced by the reference method. Plume characteristics, including particle size and particle color, were mentioned as individual variables which might affect the data generated by lidar. EPA performed extensive tests to correlate Alternate Method 1 with Reference Method 9 [see Reference 5.1]. The data reduction technique assures that lidar-determined opacity values will not show an emission source exceeding an opacity standard when the reference method would not also show that it was exceeding the standard. In some cases, Alternate Method 1 will show a source to be in compliance with opacity standards when a visual observer would report that the source was not in compliance with the standard.

Some of the comments were directed toward an apparent subjectivity in the use of lidar when there was a potential for external interference during an opacity measurement. EPA has shown that lidar may be used to measure opacity values under a wider variety of conditions than would be possible using the reference method. However, lidar-determined opacity values will not be used for enforcement purposes when intervening variables significantly interfere with an opacity determination. Examples of a heavy precipitation event or excessive ambient (wind blown) dust were given to explain potential causes of erratic data. These opacity values would be excluded from an enforcement decision by the data reduction technique which identifies and discards unsatisfactory data.

All of the other limitations noted by commentators are no more restrictive than conditions met during the visual determination of opacity. For example, the proximity of other plumes was mentioned. EPA has shown that a lidar is able to distinguish individual plumes that are not in spatial coincidence. It requires no more than 50 meters of clearance before and beyond the plume along its line-of-sight. The positioning problem is far less restrictive because the lidar system only measures the optical backscatter produced by its own unique light source. Its only position restriction is a 15° cone angle about the sun which eliminates solar signal noise in the receiver. The initial positioning of the lidar is approximately perpendicular to the direction of the plume. The lidar data reduction technique compensates for signficant plume drift and, unlike the reference method, adjustments are made to determine the opacity of the actual cross section of the plume. The lidar operators verify that the measurements are taken in the same part of the plume that visual observers would use. This, for example, precludes misleading measurements taken if a certain plume were to loop tightly back upon itself.

Some commentators were concerned with the lidar's ability to determine opacity values for a source with an attached steam plume during nighttime measurements. EPA has suggested several visual aids which are available to verify the proper use of the lidar during nighttime measurements. Even without these aides, the lidar is capable of discerning the sudden change in opacities which would allow the alternate method to be used for this purpose. The system's data display allows the lidar operator to distinguish the end of an attached steam plume and consequently permits the measurement of the residual plume opacity. It is the characteristic of the nearly 100% opacity and high reflectivity of a steam plume that allows the lidar to make this measurement when the other mentioned visual aids may not provide adequate information. Other nighttime concerns expressed were the inability of a source to refute lidar determinations because the source would be unable to field a team of visual observers. EPA notes that the source is in control of the operation and has access to monitoring and production records which could be used for this purpose.

Many commentators were concerned with the possibility that the lidar-determined opacity values for an emission source would vary from opacity values determined by visual observers. As a result of these

comments, EPA conducted a collaborative test to determine if any discernable variance would be detected. The results of the test showed that the lidar-measured average opacity was 4% (full scale) greater than that obtained by the visual emissions observers for black smoke. For white smoke the lidar-measured average opacity was 8% (full scale) lower than that obtained by the observers.

EPA applied the results of the collaborative test and the fact that lidar is more sensitive to low-level visible emissions than visible emissions observers (giving rise to the definition of correlation which states that 0% opacity by Reference Method 9 is defined as being less than or equal to 5% plume opacity by lidar determination), to define actual plume opacity. This opacity value is calculated from the lidar-measured opacity as shown in Equation AM1-15 of the Alternate Method. The reasons for, and the derivation of this equation, is provided in Reference 5.1 of Alternate Method 1.

Other comments were addressed to the correlation of the lidar system with various operators or with other lidar systems. Each EPA crew of lidar operators must demonstrate their proficiency at least annually during the calibration tests. Other lidar systems must satisfy the requirements of the Performance Evaluation Tests of the Alternate Method. EPA sees no useful enforcement purpose for comparing lidar systems with each other.

Commentators suggested that lidar opacity values obtained from a small portion of a plume would fail to account for the averaging effect of a visual observer or the slower responding in-stack transmissometer, when reading a highly variable plume. This was not observed during the collaborative testing, but even if it is an inherent characteristic, the lidar-determined opacity values would average out the variation observed in time and space.

The comments directed to aspects of Reference Method 9 do not apply to the Alternate Method. Such comments included discussions of: (1) stricter technical requirements for in-stack transmissometers than those used for the Method 9 calibrating smoke generators, and (2) the relationship between visual opacity and mass emissions. The use of the alternative method does not change the basis for the reference method. Lidar is used to make the same determinations that Method 9 was approved to make. The approval of a lidar system for the remote determination of the opacity of stationary source emissions provides a consistent, reliable mechanism for extending regulatory compliance determinations under a wider variety of conditions. This extension clearly furthers the objectives of the opacity standard by verifying that stationary sources meet opacity requirements at all times, day and night.

A frequent comment was addressed to the safe use of a lidar system in the field environment. Concerns were expressed for potential encounters with the laser beam by plant personnel, bystanders, and wildlife. The list of references includes manuals with detailed requirements used by EPA operators to prevent exposure of individuals to the laser beam. This list in addition to Section VII of Reference 5.1, is indicative of the thorough safety training that is an integral part of the EPA operator-training program. EPA operators must verify that no plant personnel are in the vicinity of the laser beam. This is accomplished visually and the procedure is repeated anytime the lidar is directed close to the lip of a stack or other source. The Federal Aviation Administration (FAA) is satisfied with EPA precautions. Flight paths near an intended source are reviewed prior to a test and the FAA is notified of the testing in a particular area. The required operator vigilence prevents an accidental exposure to the direct laser beam by the public or by wildlife. The regulation does not specify safety procedures because EPA's position is that the adoption and practice of laser safety in the field is incumbent upon any owner/operator of a lidar. Any lidar manufacturer can provide training in lidar safety (References 48 and 49 of the Technical Support Document). The purpose of this regulation is to provide a method for measuring plume opacity by lidar. Section VII of the Technical Support Document [Reference 5.1] describes adequate laser safety requirements and procedures when applied to field use.

The aiming telescope indicates where the laser beam will strike the emission source when the lidar range in determined. The operator may use a variety of visual aides to determine that no employees are working on a stack or other source that is to be tested. The lidar will not be operated when there is a reasonable, though slight, probability that people or animals will intersect the laser beam. Similarly, objects that could reflect a laser pulse intact are avoided. The diffuse reflection of a laser beam from an opaque object does not present a hazard to the public or to the lidar operators. A prior notification of intended source testing was not added to the regulation as requested by several commentators. The present safeguards are adequate for protecting employees and a notice requirement could limit enforcement applications.

One commentator questioned the Agency's ability to enforce the restriction on operator use of dulling drugs or medications prior to or during lidar operations. EPA based these restrictions upon safety regulations specified for the operator of sophisticated or powerful equipment that presents a potential risk to the public, such as an aircraft pilot. It is the individual responsibility of lidar operators to avoid the use of any substance which will impair their senses or their ability to operate the lidar safely. Abuse of this restriction may be detected by other operators or by an operator's inability to perform satisfactorily. EPA clearly emphasizes the individual's responsibility in laser safety during the training program.

Several commentators noted that the running average method for the lidar determination of average opacity values contradicted the Method 9 calculation. EPA deleted the running average requirement from the alternate method, and replaced it with the calculation for the average of actual opacity.

Comments regarding the discarding of opacity values indicate the need for an explanation of quality control and the linkage of the alternate method with the variations of the reference method. The reference or ambient air signals required during a test maintain the accuracy and precision of the alternate method. Only measurements that provide high quality data are used for compliance determination. The acceptance/rejection criterion assures the objectivity of the alternate method and further reinforces the accuracy of the results. The requirement that the associated standard deviation, $S_o$, for a lidar-determined opacity value be less than or equal to 8% (full scale), accounts for the variations that are inherent to Method 9 observations.

Several commentators suggested that quality assurance procedures are a vital aspect of any system. The Agency agrees with this observation and continued the requirements for lidar performance verification. This includes annual calibration of a lidar system, routine equipment calibrations, refererence measurements (ambient air shots), and an acceptance/rejection criterion. Additionally, collaborative tests were conducted to verify the correlation between opacity values determined by lidar and those determined by certified visual emissions observers. The test results were

incorporated into the data reduction technique to provide high quality data.

Other commentators mentioned apparent subjectivity of the lidar operator in determining plume opacity values. The alternate method requirements virtually eliminate subjectivity. The individual characteristics of each source will control positioning and use of the lidar system. These judgments are no more subjective than those required by the reference method. The alternate method produces more objective data because lidar is less restricted, and is able to compensate or correct for plume drift. The operator is able to visually verify that the lidar measurements are free from interference.

Commentators correctly perceived that training is required to produce lidar operators. Some commentators felt that EPA should institute a certification program for lidar operators. EPA decided not to make a lidar operator certification program a part of this alternate method because proper and adequate training in lidar operations is the responsibility of the lidar owner/operator and is readily provided by any number of lidar manufacturers.

EPA expects that the performance verification of the lidar will be performed by the personnel who will be operating the system in the field using this method. If a lidar is not properly operated, it will not fulfill the performance verification requirements of this method.

EPA's experience with the training, certification and use of non-specialized trainees has been successful. Usually lidar manufacturers will offer training for prospective lidar operators.

Comments were made concerning the availability of lidars and lidar equipment. Several contractors located throughout the country offer the manufacture or lease of lidar systems.

Other comments were directed toward the availability of lidar data. EPA policy encourages the dissemination of information to the public. Lidar-generated data will be available to the same extent that data obtained by EPA visible emission observers is available.

A[illegible] review of one commentator's obse[illegible]ation of the improper application of a m[illegible]thematical formula, the appropriate corrections were made in the alternate method. Derivations for the formulas in the alternate method are contained in the Technical Support Document [Reference 5.1].

Another commentator speculated upon undefined problems and unobserved interferences. EPA will deal with speculative problems when they are encountered.

One commentator contended that the use of a lidar system was unconstitutional, but failed to provide any reasoning or legal authorities to support this argument. In any event, it is without merit.

Stack plumes are visible from "plain fields" and the Constitution does not bar air pollution enforcement officials from enforcing standards by observing and measuring the opacity of such plumes. *Air Pollution Variance Board of Colorado v. Western Alfalfa Corp.*, 416 U.S. 861 (1974). An owner or operator of such a stack does not have a reasonable expectation that the opacity of such plumes will not be observed and measured. Therefore, such observation and measurement does not constitute a "search" under the Fourth Amendment. See, *Katz v. United States*, 389 U.S. 347 (1967). Such observation and measurement does not become a "search" simply because it is performed by a mechanism such as lidar, that makes the measurement more reliable, and allows measurement at night. *United States v. Lee*, 274 U.S. 559, 563 (1927); *State v. Stachler*, 570 P. 2d 1323 (Haw. S. Ct. 1977); *Burkholder v. Superior Court*, 158 Cal. Rptr. 86 (Ct. App. 1979).

The commentator also objected that EPA lacks statutory authority to authorize the enforcement of opacity limits by lidar. He argued that EPA is not authorized to use "remote, surreptitious, non-entry" means of enforcement. This argument is without merit.

Section 114 of the Clean Air Act is a broad grant of authority to sample emissions. It provides that, for the purposes of carrying out virtually all provisions of the Act, including enforcement of state implementation plans and new source performance standards, "the Administrator may require any person who owns or operates any emission source" to "install, use, and maintain such monitoring equipment or methods," and "sample such emissions (in accordance with such methods, at such locations, at such intervals, and in such manner as the Administrator may prescribe) * * * as he may reasonably require" *and* that the Administrator may "sample any [such] emissions," Section 114(a)(1), (2)(B). Because lidar is a reliable means of sampling the opacity of emissions and of monitoring the performance of pollution control techniques, the Administrator may reasonably allow its use.

There is nothing in the language or legislative history of Section 114 to suggest that if a sampling or monitoring technique can be used from outside the boundaries of a polluting plant without the owner's knowledge, it may therefore not be used as an enforcement technique. Indeed, EPA has required the use of Method 9 to monitor and sample emissions since 1971, 36 FR 24876, 34895 (Dec. 23, 1971), and Method 9 can be and is used from outside plant boundaries without owners' knowledge. The use of Method 9 has been upheld as a reasonable enforcement technique. *Portland Cement Association v. Train*, 513 F.2d 506, 508 (D.C. Cir. 1975).

Finally, Section 301(a)(1) makes it clear that the Administrator may exercise his authority under Section 114 by regulation. It provides, "The Administrator is authorized to prescribe such regulations as are necessary to carry out his functions under this chapter [the Act]." Therefore, the Administrator has the authority to prescribe by regulation the manner in which lidar may be used.

Another commentator objected in general terms that the rulemaking has not complied with Section 307(d) of the Act, but did not mention any specific defect. EPA agrees that the rulemaking is governed by Section 307(d), but believes that it fully complies with that section.

This commentator also objected that EPA is required to provide opportunity for hearings on this rulemaking in every state of the United States, under Section 110(c)(1), of the Act. This appears to refer to EPA's regulations on Approval and Promulgation of Implementation Plans, 40 CFR Part 52, which provide, in the General Provisions, § 52.12(c) that:

> For the purpose of Federal enforcement, the following test procedures shall be used:
> (1) Sources subject to plan provisions which do not specify a test procedure * * * will be tested by means of the appropriate procedures and methods prescribed in Part 60 of this chapter * * *

This provision, promulgated on May 31, 1972 (37 FR 10842, 18847), has governed all state plans approved under the Clean Air Act. It merely provides that where a state has not specified a procedure for testing a source's compliance with its plan, EPA will use the appropriate Federally-established test method.

The commentator implies that because 40 CFR 52.12(c) allows EPA to use Part 60 methods to enforce state plans, a rulemaking adding lidar to the Part 60 methods requires a hearing in each state. This is incorrect.

Section 110(c)(1) requires EPA to hold a hearing in a state only where the state has failed to submit an approvable

implementation plan, and EPA thereupon promulgates a plan for that state. This rulemaking does not deal with such a case. It merely establishes an alternate test method that may be used to enforce a state plan where a state has not otherwise provided.

Section 110 does not require that regulations of national applicability affecting state plans may be adopted only after opportunity for 55 hearings, one in each state.[1] Indeed, all such regulations have been promulgated without opportunity for a hearing in each state. See 40 CFR Part 52, Subparts A and EEE and Appendices, and Part 51. In particular, EPA has from time to time revised and updated its test methods, as it is now doing for Method 9. EPA has done so in every case by rulemakings without providing opportunity for hearings in every state. See generally 40 CFR Part 60, Appendix A (1980).

Section 307(d) also makes clear that Congress did not intend to require multiple hearings for rulemakings governing implementation plans. Section 307(d) establishes procedural requirements for EPA rulemakings, including all rulemakings relating to the prevention of significant deterioration ("PSD"). PSD rulemakings, both before and since Section 307(d) was added to the Act, have taken the form of regulations amending all state plans, or governing all state plans. See, 40 CFR 52.21 and 51.24 (1980). Section 307(d)(5), however, requires only a single public hearing for such rulemakings. EPA therefore fully complied with the Clean Air Act by holding a single public hearing for this rulemaking.

Finally, there was no reason to hold more than one hearing. Only seven persons requested a hearing. No one requested additional hearings, or gave any reason why hearings in other states should be held. Indeed, the commentator waived a request for any hearing. Since there was no reason to hold additional hearings, it was lawful for EPA not to hold them. See *American Airlines Inc. v. CAB*, 359 F. 2d 624, 632–633 (D.C. Cir. 1966); Clean Air Act Section 307(d)(9)(D)(i), (iii).

**Applicable Documentation**

This alternate method is issued under the authority of Sections 111, 114, and 301 of the Clean Air Act, as amended (42 U.S.C 7411, 7414, 7601).

The docket, Number A-79-41, is available for public inspection and copying between 8:00 a.m. and 4:00 p.m. at EPA's Central Docket Section, Room 2903B, Waterside Mall, 401 M Street, S.W., Washington, DC 20460.

Under Executive Order 12291, EPA must judge whether a regulation is major and therefore subject to the requirements of a Regulatory Impact Analysis. This regulation is not major because the annual effect on the economy is less than $100 million. This is an alternate test method to an existing enforceable test method. It imposes no new regulatory requirements. The use of this alternate method is optional for opacity determination.

This regulation was submitted to the Office of Management and Budget (OMB) for review as required by Executive Order 12291.

Dated: October 19, 1981.

Anne M. Gorsuch,

*Administrator.*

## PART 60—STANDARDS OF PERFORMANCE FOR NEW STATIONARY SOURCES

EPA is amending 40 CFR Part 60, Appendix A by adding an alternate method to Method 9 as follows:

### Appendix A—Reference Methods

* * * * *

**Method 9—Visual Determination of the Opacity of Emissions From Stationary Sources**

* * * * *

**Alternate Method 1—Determination of the Opacity of Emissions From Stationary Sources Remotely by Lidar**

This alternate method provides the quantitative determination of the opacity of an emissions plume remotely by a mobile lidar system (laser radar; Light Detection and Ranging). The method includes procedures for the calibration of the lidar and procedures to be used in the field for the lidar determination of plume opacity. The lidar is used to measure plume opacity during either day or nighttime hours because it contains its own pulsed light source or transmitter. The operation of the lidar is not dependent upon ambient lighting conditions (light, dark, sunny or cloudy).

The lidar mechanism or technique is applicable to measuring plume opacity at numerous wavelengths of laser radiation. However, the performance evaluation and calibration test results given in support of this method apply only to a lidar that employs a ruby (red light) laser [Reference 5.1].

*1. Principle and Applicability*

1.1 Principle. The opacity of visible emissions from stationary sources (stacks, roof vents, etc.) is measured remotely by a mobile lidar (laser radar).

1.2 Applicability. This method is applicable for the remote measurement of the opacity of visible emissions from stationary sources during both nighttime and daylight conditions, pursuant to 40 CFR § 60.11(b). It is also applicable for the calibration and performance verification of the mobile lidar for the measurement of the opacity of emissions. A performance/design specification for a basic lidar system is also incorporated into this method.

1.3 Definitions.

Azimuth angle: The angle in the horizontal plane that designates where the laser beam is pointed. It is measured from an arbitrary fixed reference line in that plane.

Backscatter: The scattering of laser light in a direction opposite to that of the incident laser beam due to reflection from particulates along the beam's atmospheric path which may include a smoke plume.

Backscatter signal: The general term for the lidar return signal which results from laser light being backscattered by atmospheric and smoke plume particulates.

Convergence distance: The distance from the lidar to the point of overlap of the lidar receiver's field-of-view and the laser beam.

Elevation angle: The angle of inclination of the laser beam referenced to the horizontal plane.

Far region: The region of the atmosphere's path along the lidar line-of-sight beyond or behind the plume being measured.

Lidar: Acronym for Light Detection and Ranging.

Lidar range: The range of distance from the lidar to a point of interest along the lidar line-of-sight.

Near region: The region of the atmospheric path along the lidar line-of-sight between the lidar's convergence distance and the plume being measured.

Opacity: One minus the optical transmittance of a smoke plume, screen target, etc.

Pick interval: The time or range intervals in the lidar backscatter signal whose minimum average amplitude is used to calculate opacity. Two pick intervals are required, one in the near region and one in the far region.

Plume: The plume being measured by lidar.

Plume signal: The backscatter signal resulting from the laser light pulse passing through a plume.

$1/R^2$ correction: The correction made for the systematic decrease in lidar backscatter signal amplitude with range.

Reference signal: The backscatter signal resulting from the laser light pulse passing through ambient air.

Sample interval: The time period between successive samples for a digital signal or between successive measurements for an analog signal.

Signal spike: An abrupt, momentary increase and decrease in signal amplitude.

Source: The source being tested by lidar.

Time reference: The time ($t_o$) when the laser pulse emerges from the laser, used as the reference in all lidar time or range measurements.

*2. Procedures.*

The mobile lidar calibrated in accordance with Paragraph 3 of this method shall use the following procedures for remotely measuring the opacity of stationary source emissions:

[1] Under the Clean Air Act, "state" is defined to include the 50 states, plus five other areas. Section 302(d). Each of the 55 "states" has a plan. 40 CFR Part 52, Subparts B–DDD.

2.1 Lidar Position. The lidar shall be positioned at a distance from the plume sufficient to provide an unobstructed view of the source emissions. The plume must be at a range of at least 50 meters or three consecutive pick intervals (whichever is greater) from the lidar's transmitter/receiver convergence distance along the line-of-sight. The maximum effective opacity measurement distance of the lidar is a function of local atmospheric conditions, laser beam diameter, and plume diameter. The test position of the lidar shall be selected so that the diameter of the laser beam at the measurement point within the plume shall be no larger than three-fourths the plume diameter. The beam diameter is calculated by Equation (AM1-1):

$$D(\text{lidar}) = A + R\phi < 0.75\ D(\text{Plume}) \quad \text{(AM1-1)}$$

where:

D(Plume) = diameter of the plume (cm),
$\phi$ = laser beam divergence measured in radians
R = range from the lidar to the source (cm)
D(Lidar = diameter of the laser beam at range R (cm),
A = diameter of the laser beam or pulse where it leaves the laser.

The lidar range, R, is obtained by aiming and firing the laser at the emissions source structure immediately below the outlet. The range value is then determined from the backscatter signal which consists of a signal spike (return from source structure) and the atmospheric backscatter signal [Reference 5.1]. This backscatter signal should be recorded.

When there is more than one source of emissions in the immediate vicinity of the plume, the lidar shall be positioned so that the laser beam passes through only a single plume, free from any interference of the other plumes for a minimum of 50 meters or three consecutive pick intervals (whichever is greater) in each region before and beyond the plume along the line-of-sight (determined from the backscatter signals). The lidar shall initially be positioned so that its line-of-sight is approximately perpendicular to the plume.

When measuring the opacity of emissions from rectangular outlets (e.g., roof monitors, open baghouses, noncircular stacks, etc.), the lidar shall be placed in a position so that its line-of-sight is approximately perpendicular to the longer (major) axis of the outlet.

2.2 Lidar Operational Restrictions. The lidar receiver shall not be aimed within an angle of ± 15° (cone angle) of the sun.

This method shall not be used to make opacity measurements if thunderstorms, snowstorms, hail storms, high wind, high-ambient dust levels, fog or other atmospheric conditions cause the reference signals to consistently exceed the limits specified in Section 2.3.

2.3 Reference Signal Requirements. Once placed in its proper position for opacity measurement, the laser is aimed and fired with the line-of-sight near the outlet height and rotated horizontally to a position clear of the source structure and the associated plume. The backscatter signal obtained from this position is called the ambient-air or reference signal. The lidar operator shall inspect this signal [Section V of Reference 5.1] to: (1) determine if the lidar line-of-sight is free from interference from other plumes and from physical obstructions such as cables, power lines, etc., for a minimum of 50 meters or three consecutive pick intervals (whichever is greater) in each region before and beyond the plume, and (2) obtain a qualitative measure of the homogeneity of the ambient air by noting any signal spikes.

Should there be any signal spikes on the reference signal within a minimum of 50 meters or three consecutive pick intervals (whichever is greater) in each region before and beyond the plume, the laser shall be fired three more times and the operator shall inspect the reference signals on the display. If the spike(s) remains, the azimuth angle shall be changed and the above procedures conducted again. If the spike(s) disappears in all three reference signals, the lidar line-of-sight is acceptable if there is shot-to-shot consistency and there is no interference from other plumes.

Shot-to-shot consistency of a series of reference signals over a period of twenty seconds is verified in either of two ways. (1) The lidar operator shall observe the reference signal amplitudes. For shot-to-shot consistency the ratio of $R_f$ to $R_n$ [amplitudes of the near and far region pick intervals (Section 2.61)] shall vary by not more than ± 6% between shots; or (2) the lidar operator shall accept any one of the reference signals and treat the other two as plume signals; then the opacity for each of the subsequent reference signals is calculated (Equation AM1-2). For shot-to-shot consistency, the opacity values shall be within ± 3% of 0% opacity and the associated $S_v$ values less than or equal to 6% (full scale) [Section 2.6].

If a set of reference signals fails to meet the requirements of this section, then all plume signals [Section 2.4] from the last set of acceptable reference signals to the failed set shall be discarded.

2.3.1 Initial and Final Reference Signals. Three reference signals shall be obtained within a 90-second time period prior to any data run. A final set of three reference signals shall be obtained within three (3) minutes after the completion of the same data run.

2.3.2 Temporal Criterion for Additional Reference Signals. An additional set of reference signals shall be obtained during a data run if there is a change in wind direction or plume drift at 30° or more from the direction that was prevalent when the last set of reference signals were obtained. An additional set of reference signals shall also be obtained if there is a change in amplitude in either the near or the far region of the plume signal, that is greater than 6% of the near signal amplitude and this change in amplitude remains for 30 seconds or more.

2.4 Plume Signal Requirements. Once properly aimed, the lidar is placed in operation with the nominal pulse or firing rate of six pulses/minute (1 pulse/10 seconds). The lidar operator shall observe the plume backscatter signals to determine the need for additional reference signals as required by Section 2.3.2. The plume signals are recorded from lidar start to stop and are called a data run. The length of a data run is determined by operator discretion. Short-term stops of the lidar to record additional reference signals do not constitute the end of a data run if plume signals are resumed within 90 seconds after the reference signals have been recorded, and the total stop or interrupt time does not exceed 3 minutes.

2.4.1 Non-hydrated Plumes. The laser shall be aimed at the region of the plume which displays the greatest opacity. The lidar operator must visually verify that the laser is aimed clearly above the source exit structure.

2.4.2 Hydrated Plumes. The lidar will be used to measure the opacity of hydrated or so-called steam plumes. As listed in the reference method, there are two types, i.e., attached and detached steam plumes.

2.4.2.1 Attached Steam Plumes. When condensed water vapor is present within a plume, lidar opacity measurements shall be made at a point within the residual plume where the condensed water vapor is no longer visible. The laser shall be aimed into the most dense region (region of highest opacity) of the residual plume.

During daylight hours the lidar operator locates the most dense portion of the residual plume visually. During nighttime hours a high-intensity spotlight, night vision scope, or low light level TV, etc., can be used as an aid to locate the residual plume. If visual determination is ineffective, the lidar may be used to locate the most dense region of the residual plume by repeatedly measuring opacity, along the longitudinal axis or center of the plume from the emissions outlet to a point just beyond the steam plume. The lidar operator should also observe color differences and plume reflectivity to ensure that the lidar is aimed completely within the residual plume. If the operator does not obtain a clear indication of the location of the residual plume, this method shall not be used.

Once the region of highest opacity of the residual plume has been located, aiming adjustments shall be made to the laser line-of-sight to correct for the following: movement to the region of highest opacity out of the lidar line-of-sight (away from the laser beam) for more than 15 seconds, expansion of the steam plume (air temperature lowers and/or relative humidity increases) so that it just begins to encroach on the field-of-view of the lidar's optical telescope receiver, or a decrease in the size of the steam plume (air temperature higher and/or relative humidity decreases) so that regions within the residual plume whose opacity is higher than the one being monitored, are present.

2.4.2.2 Detached Steam Plumes. When the water vapor in a hydrated plume condenses and becomes visible at a finite distance from the stack or source emissions outlet, the opacity of the emissions shall be measured in the region of the plume clearly above the emissions outlet and below condensation of the water vapor.

During daylight hours the lidar operators can visually determine if the steam plume is detached from the stack outlet. During nighttime hours a high-intensity spotlight, night vision scope, low light level TV, etc., can be used as an aid in determining if the steam plume is detached. If visual determination is ineffective, the lidar may be used to determine if the steam plume is detached by repeatedly measuring plume opacity from the outlet to the steam plume along the plume's longitudinal axis or center

line. The lidar operator should also observe color differences and plume reflectivity to detect a detached plume. If the operator does not obtain a clear indication of the location of the detached plume, this method shall not be used to make opacity measurements between the outlet and the detached plume.

Once the determination of a detached steam plume has been confirmed, the laser shall be aimed into the region of highest opacity in the plume between the outlet and the formation of the steam plume. Aiming adjustments shall be made to the lidar's line-of-sight within the plume to correct for changes in the location of the most dense region of the plume due to changes in wind direction and speed or if the detached steam plume moves closer to the source outlet encroaching on the most dense region of the plume. If the detached steam plume should move too close to the source outlet for the lidar to make interference-free opacity measurements, this method shall not be used.

2.5 Field Records. In addition to the recording recommendations listed in other sections of this method the following records should be maintained. Each plume measured should be uniquely identified. The name of the facility, type of facility, emission source type, geographic location of the lidar with respect to the plume, and plume characteristics should be recorded. The date of the test, the time period that a source was monitored, the time (to the nearest second) of each opacity measurement, and the sample interval should also be recorded. The wind speed, wind direction, air temperature, relative humidity, visibility (measured at the lidar's position), and cloud cover should be recorded at the beginning and end of each time period for a given source. A small sketch depicting the location of the laser beam within the plume should be recorded.

If a detached or attached steam plume is present at the emissions source, this fact should be recorded. Figures AM1-I and AM1-II are examples of logbook forms that may be used to record this type of data. Magnetic tape or paper tape may also be used to record data.

BILLING CODE 6560-38-M

LIDAR LOG CONTROL NUMBER TABULATION

Log Book Number-_____

(Assign a CONTROL NUMBER to each individual source under test)

| CONTROL NUMBER | DATE ASSIGNED | PROJECT | CITY, STATE |
|---|---|---|---|
| | | | |

continued on next page

LIDAR LOG CONTROL NUMBER TABULATION (cont')

(Assign a CONTROL NUMBER to each individual source under test)

| CONTROL NUMBER | DATE ASSIGNED | PROJECT | CITY, STATE |
|---|---|---|---|
| | | | |

Next Log Book Number-_____

Figure AM1-1 Lidar Log Control Number Tabulation

## LIDAR LOG OF OPERATIONS

Control number: OWLCA-_____

Facility name and location

At the field site on / / from _____ to _____ (local time)
Location of LIDAR:

Direction to source _____ Range to source _____ km
Laser inclination (+ angle is up horizontal is 0 ) _____
Source type and official designation:

Plume characteristics (color, shape, steam present, etc.)

Wind speed: begin _____ km/hr and _____ km hr Wind direction: begin _____ and _____
Air temperature begin _____ C and _____ C Relative humidity begin _____ %, and _____ %
Barometer begin _____ and _____ Visibility: begin _____ km and _____ km
Cloud cover begin _____ and _____

Data records made in field (tapes, printouts, photos, etc ).

| MAGNETIC TAPES | | |
|---|---|---|
| tape# | track# | files |

OPERATOR'S SIGNATURE: _____ DATE: _____

WITNESS SIGNATURE _____ DATE: _____

## LIDAR OPERATOR'S NOTES

(Include position of laser beam within plume-- attached plume, etc )

**LIDAR FUNCTION VERIFICATION** Source: optical generator ( ) screens ( )

Date of last calibration _____ This test recorded on tape# _____ track# _____

| | 1 | 2 | 3 | 4 | 5 | 6 | 7 | 8 |
|---|---|---|---|---|---|---|---|---|
| Calibrated opacity | | | | | | | | |
| Calculated opacity | | | | | | | | |
| Recorded on file | | | | | | | | |

OPERATOR'S SIGNATURE: _____ DATE: _____

WITNESS SIGNATURE: _____ DATE: _____

Figure AM1-II Lidar Log Of Operations

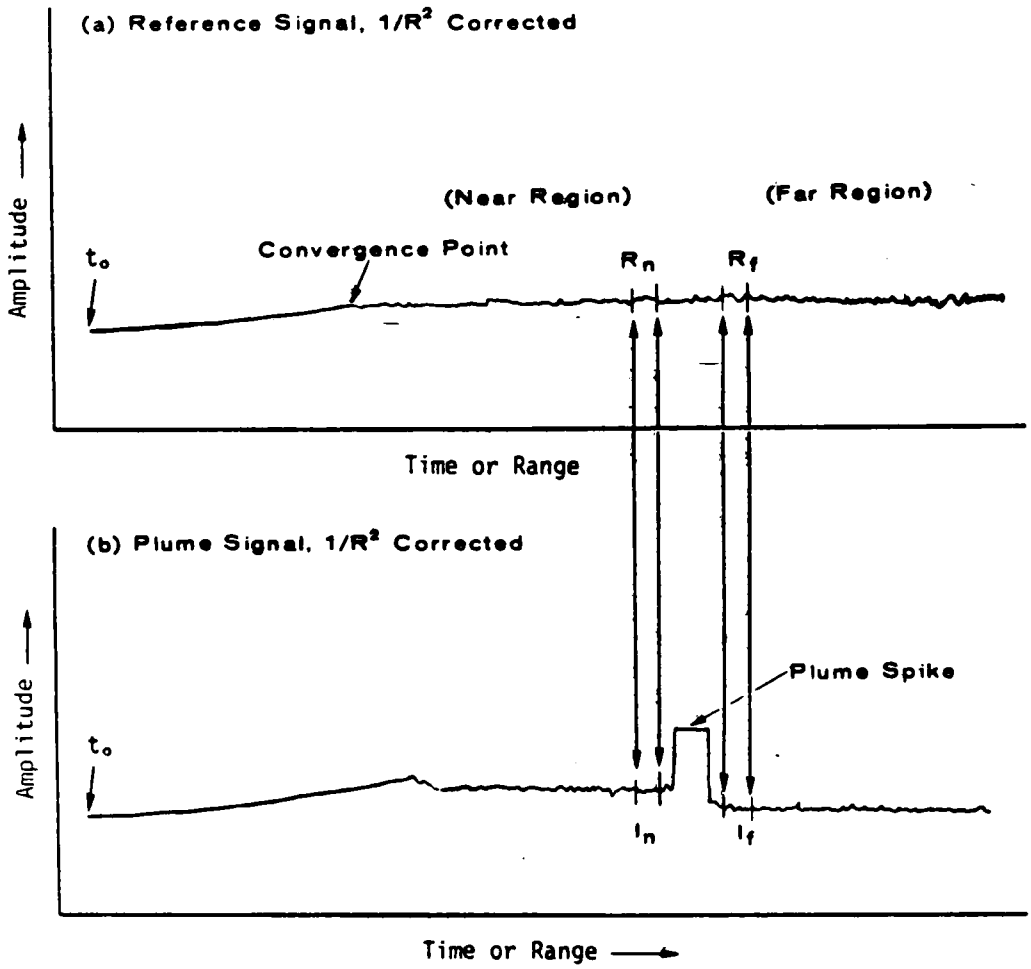


(a) Reference signal, $1/R^2$-corrected. This reference signal is for plume signal (b). $R_n$, $R_f$ are chosen to coincide with $I_n$, $I_f$.

(b) Plume signal, $1/R^2$-corrected. The plume spike and the decrease in the backscatter signal amplitude in the far region are due to the opacity of the plume. $I_n$, $I_f$ are chosen as indicated in Section 2.6.

Figure AM1-III. Plots of Lidar Backscatter Signals

BILLING CODE 6560-38-C

2.6 Opacity Calculation and Data Analysis. Referring to the reference signal and plume signal in Figure AM1-III, the measured opacity ($O_p$) in percent for each lidar measurement is calculated using Equation AM1-2. ($O_p = 1 - T_p$; $T_p$ is the plume transmittance.)

$$O_p = (100\%)\left[1 - \left(\frac{I_f}{R_f}\frac{R_n}{I_n}\right)^{\frac{1}{2}}\right], \quad \text{(AM1-2)}$$

where:

$I_n$ = near-region pick interval signal amplitude, plume signal, $1/R^2$ corrected,
$I_f$ = far-region pick interval signal amplitude, plume signal, $1/R^2$ corrected,
$R_n$ = near-region pick interval signal amplitude, reference signal, $1/R^2$ corrected, and
$R_f$ = far-region pick interval signal amplitude, reference signal, $1/R^2$ corrected.

The $1/R^2$ correction to the plume and reference signal amplitudes is made by multiplying the amplitude for each successive sample interval from the time reference, by the square of the lidar time (or range) associated with that sample interval [Reference 5.1].

The first step in selecting the pick intervals for Equation AM1-2 is to divide the plume signal amplitude by the reference signal amplitude at the same respective ranges to obtain a "normalized" signal. The pick intervals selected using this normalized signal, are a minimum of 15 m (100 nanoseconds) in length and consist of at least 5 contiguous sample intervals. In addition, the following criteria, listed in order of importance, govern pick interval selection. (1) The intervals shall be in a region of the normalized signal where the reference signal meets the requirements of Section 2.3 and is everywhere greater than zero. (2) The intervals (near and far) with the minimum average emplitude are chosen. (3) If more than one interval with the same minimum average amplitude is found, the interval closest to the plume is chosen. (4) The standard deviation, $S_o$, for the calculated opacity shall be 8% or less. ($S_o$ is calculated by Equation AM1-7).

If $S_o$ is greater than 8%, then the far pick interval shall be changed to the next interval of minimal average amplitude. If $S_o$ is still greater than 8%, then this procedure is repeated for the far pick interval. This procedure may be repeated once again for the near pick interval, but if $S_o$ remains greater than 8%, the plume signal shall be discarded.

The reference signal pick intervals, $R_n$ and $R_f$, must be chosen over the same time interval as the plume signal pick intervals, $I_n$ and $I_f$, respectively [Figure AM1-III]. Other methods of selecting pick intervals may be used if they give equivalent results. Field-oriented examples of pick interval selection are available in Reference 5.1.

The average amplitudes for each of the pick intervals, $I_n$, $I_f$, $R_n$, $R_f$, shall be calculated by averaging the respective individual amplitudes of the sample intervals from the plume signal and the associated reference signal each corrected for $1/R^2$. The amplitude of $I_n$ shall be calculated according to Equation (AM-3).

$$I_n = \frac{1}{m}\sum_{i=1}^{m} I_{ni}, \quad \text{(AM1-3)}$$

where:

$I_{ni}$ = the amplitude of the ith sample interval (near-region),
$\Sigma$ = sum of the individual amplitudes for the sample intervals,
m = number of sample intervals in the pick interval, and
$I_n$ = average amplitude of the near-region pick interval.

Similarly, the amplitudes for $I_f$, $R_n$, and $R_f$ are calculated with the three expressions in Equation (AM1-4).

$$I_f = \frac{1}{m}\sum_{i=1}^{m} I_{fi}, \quad R_n = \frac{1}{m}\sum_{i=1}^{m} R_{ni}, \quad R_f = \frac{1}{m}\sum_{i=1}^{m} R_{fi}. \quad \text{(AM1-4)}$$

The standard deviation, $S_{In}$, of the set of amplitudes for the near-region pick interval, $I_n$, shall be calculated using Equation (AM1-5).

$$S_{In} = \left[\sum_{i=1}^{m}\frac{(I_{ni} - I_n)^2}{(m-1)}\right]^{\frac{1}{2}}. \quad \text{(AM1-5)}$$

Similarly, the standard deviations $S_{If}$, $S_{Rn}$, and $S_{Rf}$ are calculated with the three expressions in Equation (AM1-6).

$$S_{If} = \left[\sum_{i=1}^{m}\frac{(I_{fi} - I_f)^2}{(m-1)}\right]^{\frac{1}{2}},$$

$$S_{Rn} = \left[\sum_{i=1}^{m}\frac{(R_{ni} - R_n)^2}{(m-1)}\right]^{\frac{1}{2}},$$

$$S_{Rf} = \left[\sum_{i=1}^{m}\frac{(R_{fi} - R_f)^2}{(m-1)}\right]^{\frac{1}{2}}. \quad \text{(AM1-6)}$$

The standard deviation, $S_o$, for each associated opacity value, $O_p$, shall be calculated using Equation (AM1-7).

$$S_o = \frac{1}{2}\left(\frac{I_f}{R_f}\frac{R_n}{I_n}\right)^{\frac{1}{2}}\left[\frac{S_{In}^2}{I_n^2} + \frac{S_{If}^2}{I_f^2} + \frac{S_{Rn}^2}{R_n^2} + \frac{S_{Rf}^2}{R_f^2}\right]^{\frac{1}{2}} \quad \text{(AM1-7)}$$

The calculated values of $I_n$, $I_f$, $R_n$, $R_f$, $S_{In}$, $S_{If}$, $S_{Rn}$, $S_{Rf}$, $O_p$, and $S_o$ should be recorded. Any plume signal with an $S_o$ greater than 8% shall be discarded.

2.6.1 Azimuth Angle Correction. If the azimuth angle correction to opacity specified in this section is performed, then the elevation angle correction specified in Section 2.6.2 shall not be performed. When opacity is measured in the residual region of an attached steam plume, and the lidar line-of-sight is not perpendicular to the plume, it may be necessary to correct the opacity measured by the lidar to obtain the opacity that would be measured on a path perpendicular to the plume. The following method, or any other method which produces equivalent results, shall be used to determine the need for a correction, to calculate the correction, and to document the point within the plume at which the opacity was measured.

Figure AM1-IV(b) shows the geometry of the opacity correction. L' is the path through the plume along which the opacity measurement is made. P' is the path perpendicular to the plume at the same point. The angle $\epsilon$ is the angle between L' and the plume center line. The angle $(\pi/2-\epsilon)$, is the angle between the L' and P'. The measured opacity, $O_p$, measured along the path L' shall be corrected to obtain the corrected opacity, $O_{pc}$, for the path P', using Equation (AM1-8).

$$O_{pc} = 1 - (1 - O_p)^{\cos(\pi/2-\epsilon)} = 1 - (1 - O_p)^{\sin\epsilon} \quad \text{(AM1-8)}$$

The correction in Equation (AM1-8) shall be performed if the inequality in Equation (AM1-9) is true.

$$\epsilon \geq \sin^{-1}\left[\frac{\ln(1.01 - O_p)}{\ln(1 - O_p)}\right]. \quad \text{(AM1-9)}$$

Figure AM1-IV(a) shows the geometry used to calculate $\epsilon$ and the position in the plume at which the lidar measurement is made. This analysis assumes that for a given lidar measurement, the range from the lidar to the plume, the elevation angle of the lidar from the horizontal plane, and the azimuth angle of the lidar from an arbitrary fixed reference in the horizontal plane can all be obtained directly.

BILLING CODE 6560-38-M

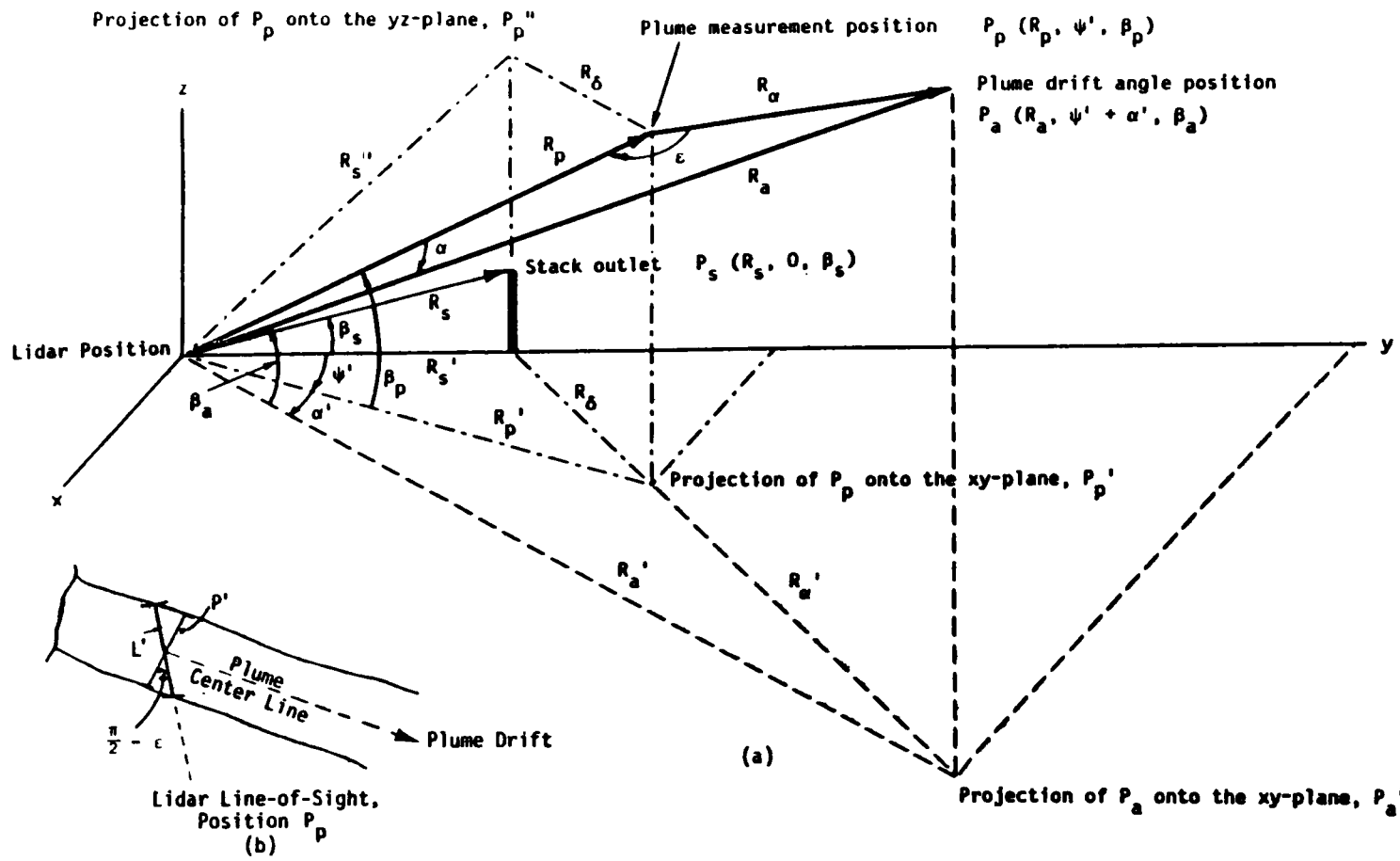


Figure AMI - IV. Correction in Opacity for Drift of the Residual Region of an Attached Steam Plume.

BILLING CODE 6560-38-C

$R_s$ = range from lidar to source*
$\beta_s$ = elevation angle of $R_s$*
$R_p$ = range from lidar to plume at the opacity measurement point*
$\beta_p$ = elevation angle of $R_p$*
$R_a$ = range from lidar to plume at some arbitrary point, $P_a$, so the drift angle of the plume can be determined*
$\beta_a$ = elevation angle of $R_a$*
$\alpha$ = angle between $R_p$ and $R_a$
$R'_s$ = projection of $R_s$ in the horizontal plane
$R'_p$ = projection of $R_p$ in the horizontal plane
$R'_a$ = projection of $R_a$ in the horizontal plane
$\psi'$ = angle between $R'_s$ and $R'_p$*
$\alpha'$ = angle between $R'_p$ and $R'_a$*
$R\delta$ = distance from the source to the opacity measurement point projected in the horizontal plane
$R\alpha$ = distance from opacity measurement point $P_p$ to the point in the plume $P_a$.

$$\varepsilon = \mathrm{Sin}^{-1}\left[\frac{R_a \mathrm{Sin}\alpha}{R_\alpha}\right], \quad \text{(AM1-10)}$$

The correction angle $\epsilon$ shall be determined using Equation AM1-10.
where:
$\alpha = \mathrm{Cos}^{-1}(\mathrm{Cos}\beta_p \mathrm{Cos}\beta_a \mathrm{Cos}\alpha' + \mathrm{Sin}\beta_p \mathrm{Sin}\beta_a)$.
and
$R\alpha = (R_p^2 + R_a^2 - 2 R_p R_a \mathrm{Cos}\alpha)^{1/2}$

$R\delta$, the distance from the source to the opacity measurement point projected in the horizontal plane, shall be determined using Equation AM1-11.

$$R_\delta = (R'^2_s + R'^2_p - 2R'_s R'_p \mathrm{Cos}\psi')^{\frac{1}{2}}, \quad \text{(AM1-11)}$$

where:
$R'_s = R_s \mathrm{Cos}\,\beta_s$, and
$R'_p = R_p \mathrm{Cos}\,\beta_p$.

In the special case where the plume centerline at the opacity measurement point is horizontal, parallel to the ground, Equation AM1-12 may be used to determine $\epsilon$ instead of Equation AM1-10.

$$\varepsilon = \mathrm{Cos}^{-1}\left[\frac{R_p^2 + R_\delta^2 - R''^2_s}{2 R_p R_s}\right], \quad \text{(AM1-12)}$$

where:
$R''_s = (R'^2_s + R_p^2 \mathrm{Sin}^2\beta_p)^{1/2}$.

If the angle $\epsilon$ is such that $\epsilon < 30°$ or $\epsilon > 150°$, the azimuth angle correction shall not be performed and the associated opacity value shall be discarded.

2.6.2 Elevation Angle Correction. An individual lidar-measured opacity, $O_p$, shall be corrected for elevation angle if the laser elevation or inclination angle, $\beta_p$ [Figure AM1-V], is greater than or equal to the value calculated in Equation AM1-13.

$$\beta_p \geq \mathrm{Cos}^{-1}\left[\frac{\ln(1.01 - O_p)}{\ln(1 - O_p)}\right] \quad \text{(AM1-13)}$$

The measured opacity, $O_p$, along the lidar path L, is adjusted to obtain the corrected opacity, $O_{pc}$, for the actual plume (horizontal) path, P, by using Equation (AM1-14).

$$O_{pc} = 1 - (1 - O_p)^{\mathrm{Cos}\beta_p}, \quad \text{(AM1-14)}$$

where:
$\beta_p$ = lidar elevation or inclination angle,
$O_p$ = measured opacity along path L, and
$O_{pc}$ = corrected opacity for the actual plume thickness P.

The values for $\beta_p$, $O_p$ and $O_{pc}$ should be recorded.

BILLING CODE 6560-38-M

*Obtained directly from lidar. These values should be recorded.

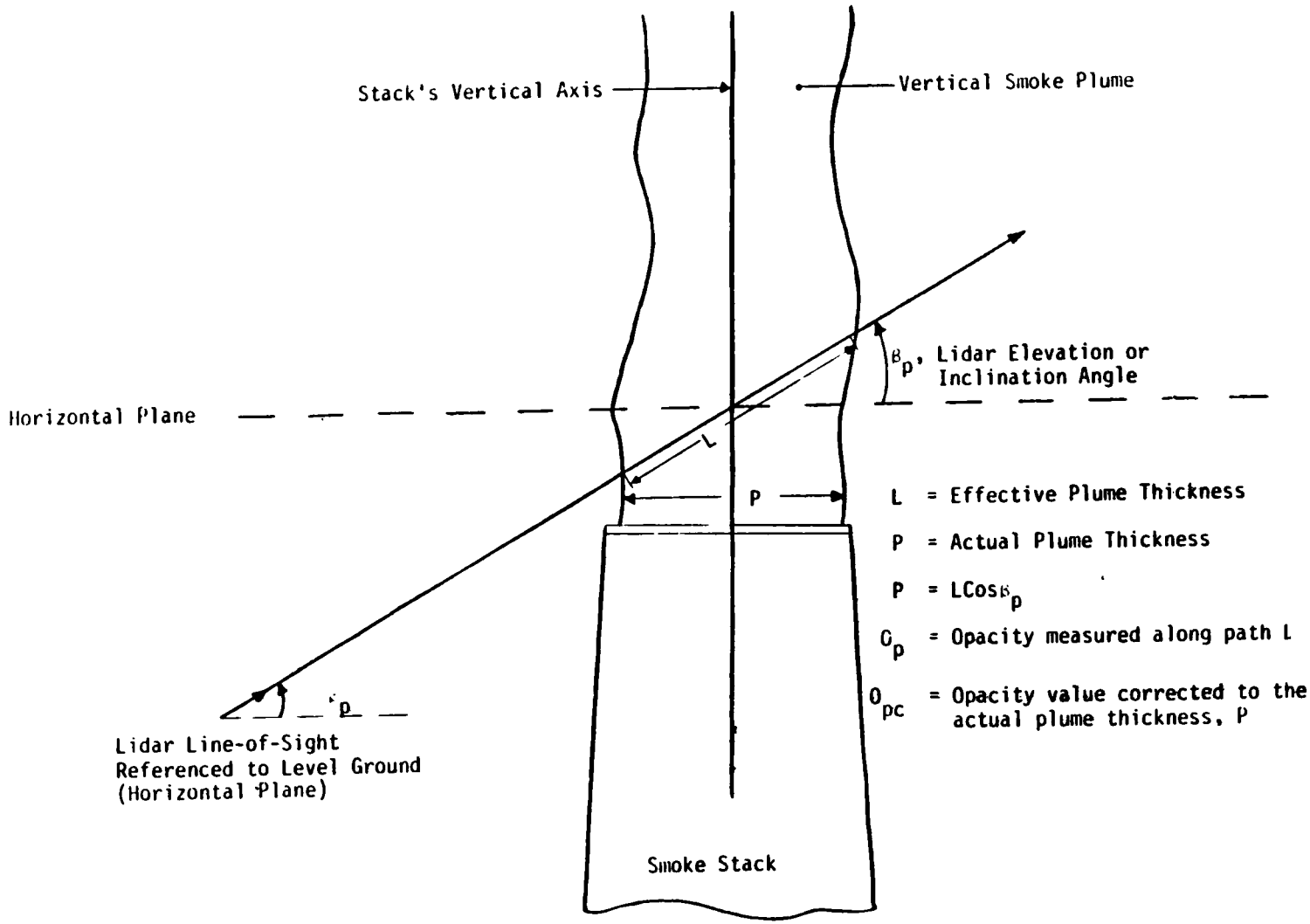


Figure AM1-V. Elevation Angle Correction for Vertical Plumes.

BILLING CODE 6560-38-C

2.6.3 Determination of Actual Plume Opacity. Actual opacity of the plume shall be determined by Equation AM1-15.

$$O_{pa} = O_{pc} - [2\ S_o + 5\%]. \qquad \text{(AM1-15)}$$

2.6.4 Calculation of Average Actual Plume Opacity. The average of the actual plume opacity, $\bar{O}_{pa}$, shall be calculated as the average of the consecutive individual actual opacity values, $O_{pa}$, by Equation AM1-16.

$$\bar{O}_{pa} = \frac{1}{n} \sum_{k=1}^{n} (O_{pa})_k \ , \qquad \text{(AM1-16)}$$

where:

$(O_{pa})_k$ = the kth actual opacity value in an averaging interval containing n opacity values; k is a summing index.

$\Sigma$ = the sum of the individual actual opacity values.

n = the number of individual actual opacity values contained in the averaging interval.

$\bar{O}_{pa}$ = average actual opacity calculated over the averaging interval.

3. Lidar Performance Verification. The lidar shall be subjected to two types of performance verifications that shall be peformed in the field. The annual calibration, conducted at least once a year, shall be used to directly verify operation and performance of the entire lidar system. The routine verification, conducted for each emission source measured, shall be used to insure proper performance of the optical receiver and associated electronics.

3.1 Annual Calibration Procedures. Either a plume from a smoke generator or screen targets shall be used to conduct this calibration.

If the screen target method is selected, five screens shall be fabricated by placing an opaque mesh material over a narrow frame (wood, metal extrusion, etc.). The screen shall have a surface area of at least one square meter. The screen material should be chosen for precise optical cpacities of about 10, 20, 40, 60, and 80%. Opacity of each target shall be optically determined and should be recorded. If a smoke generator plume is selected, it shall meet the requirements of Section 3.3 of Reference Method 9. This calibration shall be performed in the field during calm (as practical) atmospheric conditions. The lidar shall be positioned in accordance with Section 2.1.

The screen targets must be placed perpendicular to and coincident with the lidar line-of-sight at sufficient height above the ground (suggest about 30 ft) to avoid ground-level dust contamination. Reference signals shall be obtained just prior to conducting the calibration test.

The lidar shall be aimed through the center of the plume within 1 stack diameter of the exit, or through the geometric center of the screen target selected. The lidar shall be set in operation for a 6-minute data run at a nominal pulse rate of 1 pulse every 10 seconds. Each backscatter return signal and each respective opacity value obtained from the smoke generator transmissometer, shall be obtained in temporal coincidence. The data shall be analyzed and reduced in accordance with Section 2.6 of this method. This calibration shall be performed for 0% (clean air), and at least five other opacities (nominally 10, 20, 40, 60, and 80%).

The average of the lidar opacity values obtained during a 6-minute calibration run shall be calculated and should be recorded. Also the average of the opacity values obtained from the smoke generator transmissometer for the same 6-minute run shall be calculated and should be recorded.

Alternate calibration procedures that do not meet the above requirements but produce equivalent results may be used.

3.2 Routine Verification Procedures. Either one of two techniques shall be used to conduct this verification. It shall be performed at least once every 4 hours for each emission source measured. The following parameters shall be directly verified.

1) The opacity value of 0% plus a minimum of 5 (nominally 10, 20, 40, 60, and 80%) opacity values shall be verified through the PMT detector and data processing electronics.

2) The zero-signal level (receiver signal with no optical signal from the source present) shall be inspected to insure that no spurious noise is present in the signal. With the entire lidar receiver and analog/digital electronics turned on and adjusted for normal operating performance, the following procedures shall be used for Techniques 1 and 2, respectively.

3.2.1 Procedure for Technique 1. This test shall be performed with no ambient or stray light reaching the PMT detector. The narrow band filter (694.3 nanometers peak) shall be removed from its position in front of the PMT detector. Neutral density filters of nominal opacities of 10, 20, 40, 60, and 80% shall be used. The recommended test configuration is depicted in Figure AM1-VI.

BILLING CODE 6560-38-M

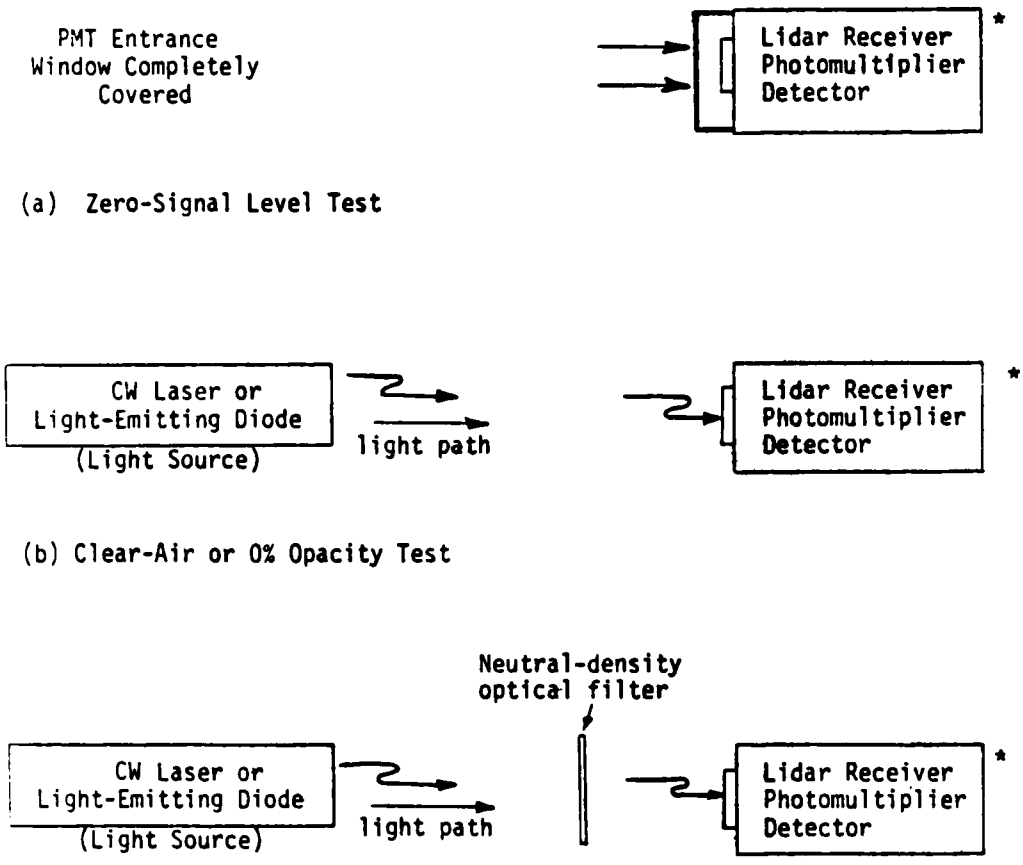


*Tests shall be performed with no ambient or stray light reaching the detector.

Figure AM1-VI. Test Configuration for Technique 1.

BILLING CODE 6560-38-C

The zero-signal level shall be measured and should be recorded, as indicated in Figure AM1-VI(a). This simulated clear-air or 0% opacity value shall be tested in using the selected light source depicted in Figure AM1-VI(b).

The light source either shall be a continuous wave (CW) laser with the beam mechanically chopped or a light emitting diode controlled with a pulse generator (rectangular pulse). (A laser beam may have to be attenuated so as not to saturate the PMT detector). This signal level shall be measured and should be recorded. The opacity value is calculated by taking two pick intervals (Section 2.6) about 1 microsecond apart in time and using Equation (AM1-2) setting the ratio $R_s/R_f=1$. This calculated value should be recorded.

The simulated clear-air signal level is also employed in the optical test using the neutral density filters. Using the test configuration in Figure AM1-VI(c), each neutral density filter shall be separately placed into the light path from the light source to the PMT detector. The signal level shall be measured and should be recorded. The opacity value for each filter is calculated by taking the signal level for that respective filter ($I_f$), dividing it by the 0% opacity signal level ($I_s$) and performing the remainder of the calculation by Equation (AM1-2) with $R_s/R_f=1$. The calculated opacity value for each filter should be recorded.

The neutral density filters used for Technique 1 shall be calibrated for actual opacity with accuracy of ±2% or better. This calibration shall be done monthly while the filters are in use and the calibrated values should be recorded.

3.2.2 Procedure for Technique 2. An optical generator (built-in calibration mechanism) that contains a light-emitting diode (red light for a lidar containing a ruby laser) is used. By injecting an optical signal into the lidar receiver immediately ahead of the PMT detector, a backscatter signal is simulated. With the entire lidar receiver electronics turned on and adjusted for normal operating performance, the optical generator is turned on and the simulation signal (corrected for $1/R^2$) is selected with no plume spike signal and with the opacity value equal to 0%. This simulated clear-air atmospheric return signal is displayed on the system's video display. The lidar operator then makes any fine adjustments that may be necessary to maintain the system's normal operating range.

The opacity values of 0% and the other five values are selected one at a time in any order. The simulated return signal data should be recorded. The opacity value shall be calculated. This measurement/calculation shall be performed at least three times for each selected opacity value. While the order is not important, each of the opacity values from the optical generator shall be verified. The calibrated optical generator opacity value for each selection should be recorded.

The optical generator used for Technique 2 shall be calibrated for actual opacity with an accuracy of ±1% or better. This calibration shall be done monthly while the generator is in use and calibrated value should be recorded.

Alternate verification procedures that do not meet the above requirements but produce equivalent results may be used.

3.3 Deviation. The permissible error for the annual calibration and routine verification are:

3.3.1 Annual Calibration Deviation.

3.3.1.1 Smoke Generator. If the lidar-measured average opacity for each data run is not within ±5% (full scale) of the respective smoke generator's average opacity over the range of 0% through 80%, then the lidar shall be considered out of calibration.

3.3.1.2 Screens. If the lidar-measured average opacity for each data run is not within ±3% (full scale) of the laboratory-determined opacity for each respective simulation screen target over the range of 0% through 80%, then the lidar shall be considered out of calibration.

3.3.2 Routine Verification Error. If the lidar-measured average opacity for each neutral density filter (Technique 1) or optical generator selection (Technique 2) is not within ±3% (full scale) of the respective laboratory calibration value then the lidar shall be considered non-operational.

4. Performance/Design Specification for Basic Lidar System.

4.1 Lidar Design Specification. The essential components of the basic lidar system are a pulsed laser (transmitter), optical receiver, detector, signal processor, recorder, and an aiming device that is used in aiming the lidar transmitter and receiver. Figure AM1-VII shows a functional block diagram of a basic lidar system.

BILLING CODE 6560-38-M

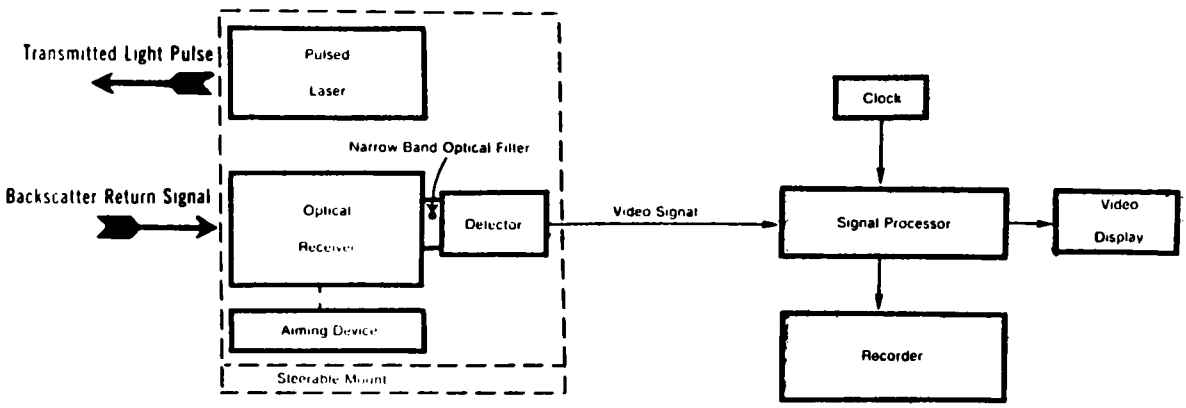


*Figure AM1-VII Functional Block Diagram of a Basic Lidar System*

BILLING CODE 6560-38-C

3.2 Performance Evaluation Tests. The owner of a lidar system shall subject such a lidar system to the performance verification tests described in Section 3. The annual calibration shall be performed for three separate complete runs and the results of each should be recorded. The requirements of Section 3.3.1 must be fulfilled for each of the three runs.

Once the conditions of the annual calibration are fulfilled the lidar shall be subjected to the routine verification for three separate complete runs. The requirements of Section 3.3.2 must be fulfilled for each of the three runs and the results should be recorded. The Administrator may request that the results of the performance evaluation be submitted for review.

5. References.

5.1 The Use of Lidar for Emissions Source Opacity Determination, U.S. Environmental Protection Agency, National Enforcement Investigations Center, Denver, CO, EPA-330/1-79-003-R, Arthur W. Dybdahl, current edition [NTIS No. PB81-246662].

5.2 Field Evaluation of Mobile Lidar for the Measurement of Smoke Plume Opacity, U.S. Environmental Protection Agency, National Enforcement Investigations Center, Denver, CO, EPA/NEIC-TS-128, February 1976.

5.3 Remote Measurement of Smoke Plume Transmittance Using Lidar, C. S. Cook, G. W. Bethke, W. D. Conner (EPA/RTP), Applied Optics 11, pg 1742, August 1972.

5.4 Lidar Studies of Stack Plumes in Rural and Urban Environments, EPA-650/4-73-002, October 1973.

5.5 American National Standard for the Safe Use of Lasers ANSI Z 136.1-176, 8 March 1976.

5.6 U.S. Army Technical Manual TB MED 279, Control of Hazards to Health from Laser Radiation, February 1969.

5.7 Laser Institute of America Laser Safety Manual, 4th Edition.

5.8 U.S. Department of Health, Education and Welfare, Regulations for the Administration and Enforcement of the Radiation Control for Health and Safety Act of 1968, January 1976.

5.9 Laser Safety Handbook, Alex Mallow, Leon Chabot, Van Nostrand Reinhold Co., 1978.

* * * * *

[FR Doc. 81-31243 Filed 10-27-81; 8:45 am]

BILLING CODE 6560-38-M

**40 CFR Part 60**

**[AD-FRL-2228-7]**

## Standards of Performance for New Stationary Sources; Methods 6A and 6B for the Determination of $SO_2$, Moisture, and $CO_2$ Emissions From Fossil Fuel Combustion Sources

**AGENCY:** Environmental Protection Agency (EPA).

**ACTION:** Final rule.

**SUMMARY:** Two reference methods (Methods 6A and 6B) were proposed in the **Federal Register** on January 26, 1981 (46 FR 8352). This action promulgates the test methods for the determination of $SO_2$, moisture, and $CO_2$ emissions from fossil fuel combustion sources as acceptable procedures for compliance in §§ 60.46 and 60.47a of 40 CFR Part 60, Subparts D and Da, respectively. Revisions to §§ 60.46 and 60.47a are being made to make this section consistent with use of the new test methods.

**EFFECTIVE DATE:** December 1, 1982.

Under Section 307(b)(1) of the Clean Air Act, judicial review of these new test methods is available *only* by filing of a petition for review in the U.S. Court of Appeals for the District of Columbia Circuit within 60 days of today's publication of this rule. Under Section 307(b)(2) of the Clean Air Act, the requirements that are the subject of today's notice may not be challenged later in civil or criminal proceedings brought by EPA to enforce these requirements.

**ADDRESSES:** *Summary of Comments and Responses.* The summary of comments and responses for the proposed methods may be obtained from the U.S. EPA Library (MD-35), Research Triangle Park, North Carolina 27711, telephone number (919) 541-2777. Please refer to "Summary of Comments and Responses—Addition of Methods 6A and 6B to Apppendix A of 40 CFR Part

60, EPA-450/3-82-015." The document contains (1) a summary of the changes made to the test methods since proposal and (2) a summary of all the public comments made on the proposed specifications and the Administrator's responses to the comments.

*Docket.* A docket, number A-80-30, containing information considered by EPA in the development of the methods is available for public inspection between 8:00 a.m. and 4:00 p.m., Monday through Friday, at EPA's Central Docket Section (A-130), West Tower Lobby, Gallery 1, 401 M Street, S.W., Washington, D.C. 20460. A reasonable fee may be charged for copying.

**FOR FURTHER INFORMATION CONTACT:** Roger T. Shigehara, Emission Measurement Branch, Emission Standards and Engineering Division (MD-19), U.S. Environmental Protection Agency, Research Triangle Park, North Carolina 27711, telephone (919) 541-2237.

**SUPPLEMENTARY INFORMATION:**

**Public Participation**

Methods 6A and 6B were proposed and published in the Federal Register on Januray 26, 1981 (46 FR 8352). Public comments were solicited at the time of proposal. To provide interested persons the opportunity for oral presentation of data, views or arguments concerning the test methods, a public hearing was scheduled for February 19, 1981, beginning at 9:00 a.m. The hearing was not held because no one requested to speak. The public comment period was from January 26, 1981 to March 27, 1981.

Eleven comment letters were received concerning issues relative to the proposed test methods. The comments have been carefully considered; and, where determined to be appropriate by the Administrator, changes have been made in the proposed methods.

**Significant Comments and Changes to The Proposed Test Methods**

Comments on the proposed test methods were received for industry, Federal agencies, State air pollution control agencies, trade associations, and equipment manufacturers. A detailed discussion of these comments and responses can be found in the separate document mentioned in the ADDRESSES section of this preamble. The summary of comments and responses serves as a basis for the revisions which have been made to the test methods between proposal and promulgation. The major comments and responses are summarized in this preamble. Most of the comment letters contained multiple comments. The comments and responses have been divided into the following areas.

*Accuracy*

One commenter had several questions about the accuracy achievable with Methods 6A and 6B. Specifically, the commenter noted experience with test data that were in error due to invalid diluent data. The commenter stated further that the F-factor calculation would also be invalid due to the inaccurate diluent data. Another commenter questioned the proposed use of a method that could not be qualified or certified as could a continuous emission monitoring system (CEMS). A lack of data supporting an evaluation of the precision and accuracy of Methods 6A and 6B was noted by two other commenters.

The EPA has conducted several field studies using Methods 6A and 6B, and the reports are listed in the bibliography of the methods. The reports are available upon request. The results show the methods to be accurate and comparable to the results of Methods 6 and 3 in determining $SO_2$ emission rates. The difficulties encountered in accurately measuring diluent data as mentioned by the one commenter can usually be traced to the testers and the testers' failure to follow adequately the quality assurance procedures in the method. Additionally, these comments seemed to be directed at Method 3, rather than Methods 6A or 6B. The $CO_2$ measurement procedures used in Methods 6A and 6B are based on the American Society for Testing and Materials (ASTM) standard method D 3178 commonly used by the utility industry and others. In response to the comment concerning certification of Method 6B as a CEMS, the Agency feels that the method can be certified as a CEMS, if desired; and, with adequate quality assurance and quality control measures, can be used in place of an instrumental CEMS during periods of CEMS breakdown, as required by the applicable regulation.

*Applicability*

One commenter noted that the use of Method 6A without the dry gas meter should be specified only for fossil fuel combustion sources. Two commenters asked about the intention of the Agency in use of Method 6B in place of CEMS and recommended that its applicability be extended to include Method 6B as an acceptable alternative to CEMS. Another commenter said that Method 6B could not be applied to stacks or ducts with significant, negative static pressure due to the possibility of reverse flow through the sample train.

Methods 6A and 6B state clearly that they are applicable only for fossil fuel combustion sources in either configuration, that is, with or without the dry gas meter. The Agency considers Method 6B an appropriate method for providing long-term emission data during periods of CEMS breakdown. The Agency is also considering use of Method 6B as an alternative to CEMS for fossil fuel combustion sources, but that determination is not final. The application to specific types of stacks or ducts must be determined on a case-by-case basis. Use of probe valves in connection with the sample timer or a switch to continuous sampling could resolve the problem of negative stack pressure.

*Technical Changes to Methods*

Several commenters recommended the use of heated probes, an isopropanol impinger, additional ascarite absorbers, larger volume sampling vessels, and higher peroxide concentrations.

The Agency agrees that some of these changes are valid and useful. A heated probe requirement has been added to both methods, as well as modification to the ascarite absorber design. An isopropanol impinger has been included in Method 6A, but, due to possible interferences with the $CO_2$ measurement, the isopropanol impinger is not included in Method 6B. The methods also include the use of hydrogen peroxide concentrations up to 10 percent over the 3 percent included in the proposal. The methods do not recommend the use of larger volume sampling equipment, such as is used with Method 8. The Agency feels that the cost of the expendable materials should be considered in determining the sample volume and, in addition, feels that the accuracy of the method is not impaired by the use of lower volume flow rate equipment. The use of such equipment or some of the other alternatives is not prohibited by the methods. The tester may use any of several alternatives in equipment, operating parameters, or techniques and remain within the restrictions of the methods providing accurate and precise results.

**Docket**

The docket is an organized and complete file of all the information considered by EPA in the development of this rulemaking. The docket is a dynamic file, since material is added throughout the rulemaking development. The docketing system is intended to allow members of the public and industries involved to identify and

locate documents so that they can intelligently and effectively participate in the rulemaking process. Along with the statement of basis and purpose of the proposed and promulgated test methods and EPA responses to significant comments, the contents of the docket will serve as the record in case of judicial review [Section 307(d)(7)(A)].

**Miscellaneous**

This rulemaking does not impose any additional emission measurement requirements on facilities affected by this rulemaking. Rather, this rulemaking provides alternative test methods which may be used by the affected facilities. If future standards impose emission measurement requirements, the impacts of the alternative test methods promulgated today will be evaluated during development of these standards.

Under Executive Order 12291, EPA must judge whether a regulation is "major" and therefore subject to the requirement of a regulatory impact analysis. This regulation is not major because it will not have an annual effect on the economy of $100 million or more; it will not result in a major increase in costs or prices; and there will be no significant adverse effects on competition, employment, investment, productivity, innovation, or on the ability of U.S.-based enterprises to compete with foreign-based enterprises in domestic or export markets.

Pursuant to the provisions of 5 U.S.C. 605(b), I hereby certify that the attached rule will not have a significant economic impact on a substantial number of small entities.

This rule was submitted to the Office of Management and Budget under E.O. 12291.

**List of Subjects in 40 CFR Part 60**

Air pollution control, Aluminum, Ammonium sulfate plants, Cement industry, Coal, Copper, Electric power plants, Glass and glass products, Grains, Intergovernmental relations, Iron, Lead, Metals, Motor vehicles, Nitric acid plants, Paper and paper products industry, Petroleum, Phosphate, Sewage disposal, Steel, Sulfuric acid plants, Waste treatment and disposal, Zinc.

This final rulemaking is issued under the authority of Sections 111, 114, and 301(a) of the Clean Air Act, as amended (42 U.S.C. 7411, 7414, and 7601(a)).

Dated: November 22, 1982.

**Anne M. Gorsuch,**

*Administrator.*

## PART 60—[AMENDED]

Sections 60.46, 60.47a, and Appendix A of 40 CFR Part 60 are amended as follows:

1. By revising § 60.46(a)(4) as follows:

**§ 60.46 Test methods and procedures.**

(a) * * *

(4) Method 6 for concentration of $SO_2$. Method 6A may be used whenever methods 6 and 3 data are used to determine the $SO_2$ emission rate in ng/J, and

* * * * *

2. By revising § 60.47a(h)(1) as follows:

**§ 60.47a Emission monitoring.**

* * * * *

(h) * * *

(1) Reference Methods 3, 6, and 7, as applicable, are used. Method 6B may be used whenever Methods 6 and 3 data are required to determine the $SO_2$ emission rate in ng/J. The sampling location(s) are the same as those specified for the continuous emission monitoring system.

* * * * *

3. By adding Methods 6A and 6B to Appendix A of 40 CFR Part 60 to read as follows:

**Appendix A—Reference Test Methods**

* * * * *

**Method 6A—Determination of Sulfur Dioxide, Moisture, and Carbon Dioxide Emissions From Fossil Fuel Combustion Sources**

*1. Applicability and Principle*

1.1 Applicability. This method applies to the determination of sulfur dioxide ($SO_2$) emissions from fossil fuel combustion sources in terms of concentration (mg/m$^3$) and in terms of emission rate (ng/J) and to the determination of carbon dioxide ($CO_2$) concentration (percent). Moisture, if desired, may also be determined by this method.

The minimum detectable limit, the upper limit, and the interferences of the method for the measurement of $SO_2$ are the same as for Method 6. For a 20-liter sample, the method has a precision of 0.5 percent $CO_2$ for concentrations between 2.5 and 25 percent $CO_2$ and 1.0 percent moisture for moisture concentrations greater than 5 percent.

1.2 Principle. The principle of sample collection is the same as for Method 6 except that moisture and $CO_2$ are collected in addition to $SO_2$ in the same sampling train. Moisture and $CO_2$ fractions are determined gravimetrically.

*2. Apparatus*

2.1 Sampling. The sampling train is shown in Figure 6A-1; the equipment required is the same as for Method 6, Section 2.1, except as specified below:

2.1.1 $SO_2$ Absorbers. Two 30-ml midget impingers with a 1-mm restricted tip and two 30-ml midget bubblers with an unrestricted tip. Other types of impingers and bubblers, such as Mae West bubblers, may be used with proper attention to reagent volumes and levels.

2.1.2 $CO_2$ Absorber. A sealable glass or plastic cylinder or bottle with an inside diameter between 30 and 90 mm and a length between 125 and 250 mm and with appropriate connections at both ends. Note: For applications downstream of wet scrubbers, a heated out-of-stack filter (either borosilicate glass wool or glass fiber mat) is necessary. The probe and filter should be heated to at least 20° C above the source temperature, but not greater than 120° C.

2.2 Sample Recovery and Analysis. The equipment needed for sample recovery and analysis is the same as required for Method 6. In addition, a balance to measure within 0.05 g is needed for analysis.

*3. Reagents*

Unless otherwise indicated, all reagents must conform to the specifications established by the committee on analytical reagents of the American Chemical Society. Where such specifications are not available, use the best available grade.

3.1 Sampling. The reagents required for sampling are the same as specified in Method 6. In addition, the following reagents are required:

BILLING CODE 6560-50-M

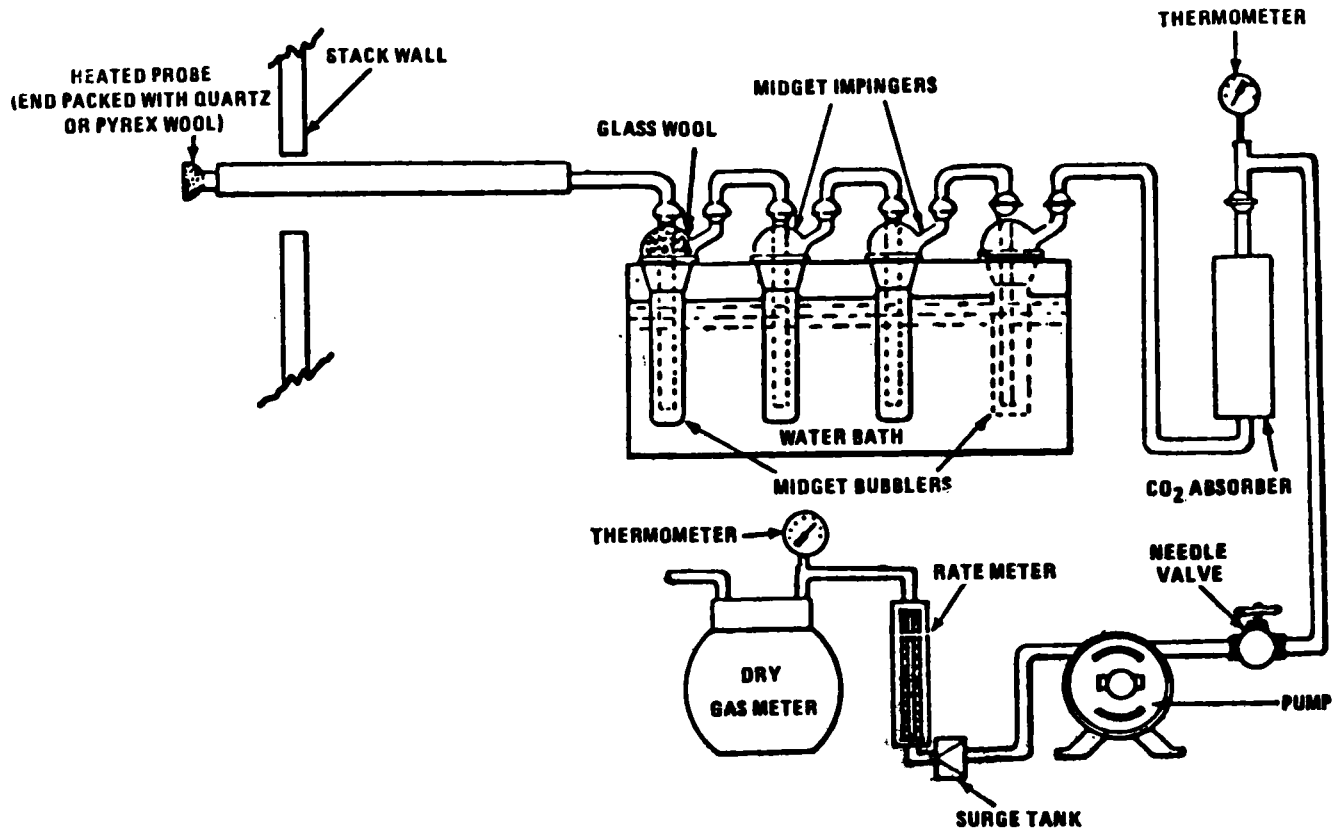


Figure 6A-1. Sampling train.

BILLING CODE 6560-50-C

3.1.1 Drierite. Anhydrous calcium sulfate ($CaSO_4$) desiccant, 8 mesh. (Do not use silica gel or similar desiccant in this application.)

3.1.2 Ascarite or Ascarite II. Sodium hydroxide coated asbestos or silica for absorption of $CO_2$, 8 to 20 mesh.

3.2 Sample Recovery and Analysis. The reagents needed for sample recovery and analysis are the same as for Method 6, Sections 3.2 and 3.3, respectively.

*4. Procedure*

4.1 Sampling.

4.1.1 Preparation of Collection Train. Measure 15 ml of 80 percent isopropanol into the first midget bubbler and 15 ml of 3 percent hydrogen peroxide into each of the first two midget impingers as described in Method 6. Insert the glass wool into the top of the isopropanol bubbler as shown in Figure 6A-1. Into the second midget bubbler, the fourth vessel in the train, place about 25 g of drierite. Clean the outsides of the bubblers and impingers and weigh (at room temperature, ≈20° C) to the nearest 0.1g. Weigh the four vessels simultaneously and record this initial mass.

With one end of the $CO_2$ absorber sealed, place glass wool in the end filling the cylinder about 1 cm deep. Place about 150 g of ascarite in the cylinder on top of the glass wool and fill the remaining space in the cylinder with glass wool. Assemble the cylinder as shown in Figure 6A-2. With the cylinder in a horizontal position, rotate it around the horizontal axis. The ascarite should remain in position during the rotation and no open spaces or channels should be formed. If necessary, pack more glass wool into the cylinder to make the ascarite more stable. With the outside of the cylinder cleaned, weigh (at room temperature, ≈ 20° C) to the nearest 0.1 g. Record this initial mass.

BILLING CODE 6560-50-M

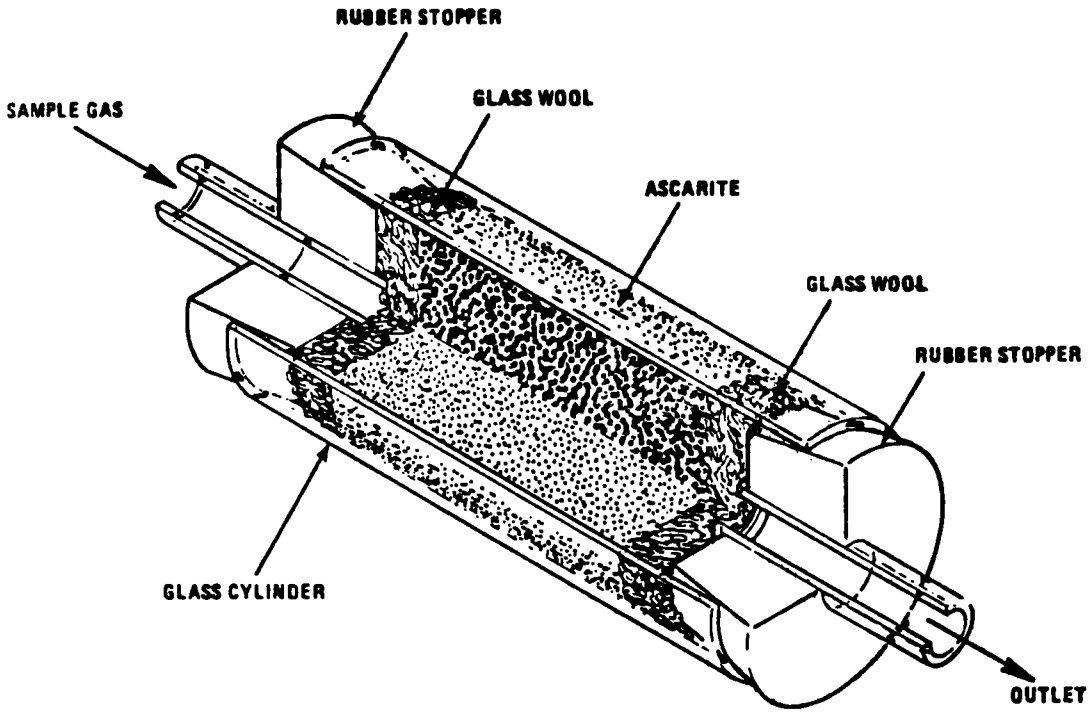


Figure 6A-2. $CO_2$ absorber.

BILLING CODE 6560-50-C

Assemble the train as shown in Figure 6A-1. Adjust the probe heater to a temperature sufficient to prevent water condensation. Place crushed ice and water around the impingers and bubblers. Mount the $CO_2$ absorber outside the water bath in a vertical flow position with sample gas inlet at the bottom. Flexible tubing, e.g., Tygon, may be used to connect the drierite bubbler to the $CO_2$ absorber. A second, smaller ascarite $CO_2$ absorber may be added in line downstream of the primary $CO_2$ absorber as a breakthrough indicator, if so desired by the tester. As carite turns white when $CO_2$ is absorbed.

4.1.2 Leak-Check Procedure and Sample Collection. The leak-check procedure and sample collection procedure are the same as specified in Method 6, Sections 4.1.2 and 4.1.3, respectively.

4.2. Sample Recovery.

4.2.1 Moisture Measurement. Disconnect the isopropanol bubbler, the peroxide impingers, and the drierite bubbler from the sample train. Allow time (about 10 minutes) for them to reach room temperature, clean the outsides, and then weigh them simultaneously in the same manner as in Section 4.1.1. Record this final mass.

4.2.2 Peroxide Solution. Discard the contents of the isopropanol bubbler and pour the contents of the midget impingers into a leak-free polyethylene bottle for shipping. Rinse the two midget impingers and connecting tubes with deionized distilled water, and add the washings to the same storage container.

4.2.3 $CO_2$ Absorber. Allow the $CO_2$ absorber to warm to room temperature (about 10 minutes), clean the outside, and weigh to the nearest 0.1 g in the same manner as in Section 4.1.1. Record this final mass and discard the used ascarite.

4.3 Sample Analysis. The sample analysis procedure for $SO_2$ is the same as specified in Method 6, Section 4.3.

*5. Calibration*

The calibrations and checks are the same as required in Method 6, Section 5.

*6. Calculations*

Carry out calculations, retaining at least one extra decimal figure beyond that of the acquired data. Round off figures after final calculations. The calculations, nomenclature, and procedures are the same as specified in Method 6 with the addition of the following:

6.1 Nomenclature

$C_{H2O}$ = Concentration of moisture, percent.

$C_{CO2}$ = Concentration of $CO_2$, dry basis, percent.

$m_{wi}$ = Initial mass of peroxide impingers and drierite bubbler, g.

$m_{wf}$ = Final mass of peroxide impingers and drierite bubbler, g.

$m_{ai}$ = Initial mass of ascarite bubbler, g.

$m_{af}$ = Final mass of ascarite bubbler, g.

$V_{CO_2(std)}$ = Standard equivalent volume of $CO_2$ collected, dry basis, $M^3$.

6.2 $CO_2$ Volume Collected, Corrected to Standard Conditions.

$$V_{CO_2(std)} = 5.467 \times 10^{-4} (m_{af} - m_{ai}) \quad \text{(Eq. 6A-1)}$$

6.3 Moisture Volume Collected, Corrected to Standard Conditions.

$$V_{w(std)} = 1.336 \times 10^{-3} (m_{wf} - m_{wi}) \quad \text{(Eq. 6A-2)}$$

6.4 $SO_2$ Concentration.

$$C_{SO_2} = 32.03 \frac{(V_t - V_{th}) N \left(\frac{V_m}{V_s}\right)}{V_{m(std)} + V_{CO_2(std)}} \quad \text{(Eq. 6A-3)}$$

6.5 $CO_2$ Concentration.

$$C_{CO_2} = \frac{V_{CO_2(std)}}{V_{m(std)} + V_{CO_2(std)}} \times 100 \quad \text{(Eq. 6A-4)}$$

6.6 Moisture Concentration.

$$C_{H_2O} = \frac{V_{w(std)}}{V_{m(std)} + V_{w(std)} + V_{CO_2(std)}} \quad \text{(Eq. 6A-5)}$$

*7. Emission Rate Procedure*

If the only emission measurement desired is in terms of emission rate of $SO_2$ (ng/J), an abbreviated procedure may be used. The differences between Method 6A and the abbreviated procedure are described below.

7.1 Sample Train. The sample train is the same as shown in Figure 6A-1 and as described in Section 4, except that the dry gas meter is not needed.

7.2 Preparation of the Collection Train. Follow the same procedure as in Section 4.1.1, except that the isopropanol bubbler, the peroxide impingers, and the drierite bubbler need not be weighed before or after the test run.

7.3 Sampling. Operate the train as described in Section 4.1.3, except that dry gas meter readings, barometric pressure, and dry gas meter temperatures need not be recorded.

7.4 Sample Recovery. Follow the procedure in Section 4.2, except that the isopropanol bubbler, the peroxide impingers, and drierite bubbler need not be weighed.

7.5 Sample Analysis. Analysis of the peroxide solution is the same as described in Section 4.3.

7.6 Calculations.

7.6.1 $SO_2$ Mass Collected.

$$m_{SO2} = 32.03 (V_t - V_{th}) N \left(\frac{V_m}{V_s}\right) \quad \text{(Eq. 6A-7)}$$

Where:

$m_{SO2}$ = Mass of $SO_2$ collected, mg.

7.6.2 Sulfur Dioxide Emission Rate.

$$E_{SO2} = F_c (1.829 \times 10^9) \frac{m_{SO2}}{(m_{af} - m_{ai})} \quad \text{(Eq. 6A-8)}$$

Where:

$e_{SO2}$ = Emission rate of $SO_2$ (ng/J).

$F_c$ = Carbon F Factor for the fuel burned, $m^3/J$, from Method 19.

*8. Bibliography.*

8.1 Same as for Method 6, citations 1 through 8, with the addition of the following:

8.2 Stanley, Jon and P.R. Westlin. An Alternate Method for Stack Gas Moisture Determination. Source Evaluation Society Newsletter Vol. 3, No. 4. November 1978.

8.3 Whittle, Richard N. and P.R. Westlin. Air Pollution Test Report: Development and Evaluation of an Intermittent Integrated $SO_2$/$CO_2$ Emission Sampling Procedure. Environmental Protection Agency, Emission Standard and Engineering Division, Emission Measurement Branch, Research Triangle Park, North Carolina. December 1979. 14 pages.

**Method 6B—Determination of Sulfur Dioxide and Carbon Dioxide Daily Average Emissions From Fossil Fuel Combustion Sources**

*1. Applicability and Principle*

1.1 Applicability. This method applies to the determination of sulfur dioxide ($SO_2$) emissions from combustion sources in terms of concentration (mg/$m^3$) and emission rate (ng/J), and for the determination of carbon dioxide ($CO_2$) concentration (percent) on a daily (24 hours) basis.

The minimum detectable limit, upper limit, and the interferences for $SO_2$ measurements are the same as for Method 6. For a 20-liter sample, the method has a precision of 0.5 percent $CO_2$ for concentrations between 2.5 and 25 percent $CO_2$.

1.2 Principle. A gas sample is extracted from the sampling point in the stack intermittently over a 24-hour or other specified time period. Sampling may also be conducted continuously if the apparatus and procedure are modified (see the note in Section 4.1.1). The $SO_2$ and $CO_2$ are separated and collected in the sampling train. The $SO_2$ fraction is measured by the barium-thorin titration method and $CO_2$ is determined gravimetrically.

*2. Apparatus*

The equipment required for this method is the same as specified for Method 6A, Section 2, except the isopropanol bubbler is not used and with the addition of an industrial timer-switch, designed to operate in the "on" position at least 2 minutes continuously and "off" the remaining period over a repeating cycle. The cycle of operation is designated in the applicable regulation. At a minimum the sample operation should include at least 12 equal, evenly spaced periods of sampling per 24 hours.

Stainless steel sampling probes, type 316, are not recommended for use with Method 6B due to potential corrosion and contamination of sample. Glass probes or other types of stainless steel, e.g., Hasteloy or Carpenter 20, are recommended for long term use such as with Method 6B. See note in Section 2.1 of

Method 6A regarding filter types and probe heat specifications.

*3. Reagents*

All reagents for sampling and analysis are the same as described in Method 6A, Section 3, except that isopropanol is not used for sampling. The hydrogen peroxide absorbing solution shall be diluted to no less than 6 percent by volume, instead of 3 percent as specified in Method 6.

*4. Procedure*

4.1 Sampling.

4.1.1 Preparation of Collection Train. Preparation of the sample train is the same as described in Method 6A, Section 4.1.4, with the addition of the following:

The sampling train is assembled as shown in Figure 6A-1, except the isopropanol bubbler is not included. The probe must be heated to a temperature sufficient to prevent water condensation and must include a filter (either in-stack, out-of-stack, or both) to prevent particulate entrainment in the peroxide impingers. The electric supply for the probe heat should be continuous and separate from the timed operation of the sample pump.

Adjust the timer-switch to operate in the "on" position from 2 to 4 minutes on a 2-hour repeating cycle or other cycle specified in the applicable regulation. Other timer sequences may be used with the restriction that the total sample volume collected is between 25 and 60 liters for the amounts of sampling reagents prescribed in this method.

Add cold water to the tank until the impingers and bubblers are covered at least two-thirds of their length. The impingers and bubbler tank must be covered and protected from intense heat and direct sunlight. If freezing conditions exist, the impinger solution and the water bath must be protected.

Note.—Sampling may be conducted continuously if a low flow-rate sample pump (20 to 40 ml/min for the reagent volumes described in this method) is used. Then the timer-switch is not necessary. In addition, if the sample pump is designed for constant rate sampling, the rate meter may be deleted. The total gas volume collected should be between 25 and 60 liters for the amounts of sampling reagents prescribed in this method.

4.1.2 Leak-Check Procedure. The leak-check procedure is the same as described in Method 6, Section 4.1.2.

4.1.3 Sample Collection. Record the initial dry gas meter reading. To begin sampling, position the tip of the probe at the sampling point, connect the probe to the first impinger (or filter), and start the timer and the sample pump. Adjust the sample flow to a constant rate of approximately 1.0 liter/min as indicated by the rotameter. Assure that the timer is operating as intended, i.e., in the "on" position for the desired period and the cycle repeats as required.

During the 24-hour sampling period, record the dry gas meter temperature one time between 9:00 a.m. and 11:00 a.m., and the barometric pressure.

At the conclusion of the run, turn off the timer and the sample pump, remove the probe from the stack, and record the final gas meter volume reading. Conduct a leak check as described in Section 4.1.2. If a leak is found, void the test run or use procedures acceptable to the Administrator to adjust the sample volume for leakage. Repeat the steps in this section (4.1.3) for successive runs.

4.2 Sample Recovery. The procedures for sample recovery (moisture measurement, peroxide solution, and ascarite bubbler) are the same as in Method 6A, Section 4.2.

4.3 Sample Analysis. Analysis of the peroxide impinger solutions is the same as in Method 6, Section 4.3.

*5. Calibration*

5.1 Metering System.

5.1.1 Initial Calibration. The initial calibration for the volume metering system is the same as for Method 6, Section 5.1.1.

5.1.2 Periodic Calibration Check. After 30 days of operation of the test train, conduct a calibration check as in Section 5.1.1 above, except for the following variations: (1) The leak check is not to be conducted, (2) three or more revolutions of the dry gas meter must be used, and (3) only two independent runs need be made. If the calibration factor does not deviate by more than 5 percent from the initial calibration factor determined in Section 5.1.1, then the dry gas meter volumes obtained during the test series are acceptable and use of the train can continue. If the calibration factor deviates by more than 5 percent, recalibrate the metering system as in Section 5.1.1; and for the calculations for the preceding 30 days of data, use the calibration factor (initial or recalibration) that yields the lower gas volume for each test run. Use the latest calibration factor for succeeding tests.

5.2 Thermometers. Calibrate against mercury-in-glass thermometers initially and at 30-day intervals.

5.3 Rotameter. The rotameter need not be calibrated, but should be cleaned and maintained according to the manufacturer's instruction.

5.4 Barometer. Calibrate against a mercury barometer initially and at 30-day intervals.

5.5 Barium Perchlorate Solution. Standarize the barium perchlorate solution against 25 ml of standard sulfuric acid to which 100 ml of 100 percent isopropanol has been added.

*6. Calculations*

The nomenclature and calculation procedures are the same as in Method 6A with the following exceptions:

$P_{bar}$ = Initial barometric pressure for the test period, mm Hg.

$T_m$ = Absolute meter temperature for the test period, °K.

*7. Emission Rate Procedure*

The emission rate procedure is the same as described in Method 6A, section 7, except that the timer is needed and is operated as described in this method.

*8. Bibliography*

The bibliography is the same as described in Method 6A, Section 8.

[FR Doc. 82-32783 Filed 11-30-82; 8:45 am]

BILLING CODE 6560-50-M

## TECHNICAL REPORT DATA
*(Please read Instructions on the reverse before completing)*

| | | |
|---|---|---|
| 1. REPORT NO. EPA 450/2-83-001 | 2. | 3. RECIPIENT'S ACCESSION NO |
| 4. TITLE AND SUBTITLE APTI Course 474 Continuous Emission Monitoring Regulatory Documents | | 5. REPORT DATE January 1983 |
| | | 6. PERFORMING ORGANIZATION CODE |
| 7. AUTHOR(S) James A. Jahnke, Ph.D. | | 8. PERFORMING ORGANIZATION REPORT NO. |
| 9. PERFORMING ORGANIZATION NAME AND ADDRESS Northrop Services, Inc. P.O. Box 12313 Research Triangle Park, NC 27709 | | 10. PROGRAM ELEMENT NO. B18A2C |
| | | 11. CONTRACT/GRANT NO. 68-02-2374 |
| 12. SPONSORING AGENCY NAME AND ADDRESS U.S. Environmental Protection Agency Manpower and Technical Information Branch Research Triangle Park, NC 27711 | | 13. TYPE OF REPORT AND PERIOD COVERED Student Materials 1975-1982 |
| | | 14. SPONSORING AGENCY CODE EPA-OANR-OAQPS |

15. SUPPLEMENTARY NOTES
Project officer for this workbook is R. E. Townsend, EPA-ERC, MD 20, Research Triangle Park, NC 27711

16. ABSTRACT

This collection of regulatory documents is to be used in conjunction with presentations of Air Pollution Training Institute Course 474, "Continuous Emission Monitoring". This publication contains selections from the Code of Federal Regulations and Federal Register publications dealing with continuous source monitoring. Selections from the Federal Register cover the period October 6, 1975 to December 1, 1982.

This publication is intended as reference material to supplement the course student manual (EPA 625/6-79-005) and the student workbook (EPA 450/2-82-017).

17. KEY WORDS AND DOCUMENT ANALYSIS

| a. DESCRIPTORS | b. IDENTIFIERS/OPEN ENDED TERMS | c. COSATI Field/Group |
|---|---|---|
| Air Pollution Training<br>Measurement<br>Continuous Emission Monitoring<br>Gas Sampling/Measurement | Source Monitoring | 14B<br>14D |

| | | |
|---|---|---|
| 18. DISTRIBUTION STATEMENT National Technical Information Service 5285 Port Royal Road Springfield, VA 22161 | 19. SECURITY CLASS (This Report) unclassified | 21. NO. OF PAGES 271 |
| | 20. SECURITY CLASS (This page) unclassified | 22. PRICE |

EPA Form 2220-1 (9-73)