PB86-208733

Avoiding Failure of Leachate Collection and Cap Drainage Systems

Little (Arthur D.), Inc., Cambridge, MA

Prepared for

Environmental Protection Agency, Cincinnati, OH

Jun 86

EPA/600/2-86/058
June 1986

AVOIDING FAILURE OF LEACHATE COLLECTION AND CAP DRAINAGE SYSTEMS

by

Jeffrey Bass
Arthur D. Little, Inc.
Cambridge, MA 02140

Contract No. 68-03-1822

Project Officer

Jonathan Herrmann
Land Pollution Control Division
Hazardous Waste Enginee ing Research Laboratory
Cincinnati, OH 45268

HAZARDOUS WASTE ENGINEERING RESEARCH LABORATORY
OFFICE OF RESEARCH AND DEVELOPMENT
U.S. ENVIRONMENTAL PROTECTION AGENCY
CINCINNATI, OH 45268

TECHNICAL REPORT DATA
(Please read Instructions on the reverse before completing)

1. REPORT NO. EPA/600/2-86/058	2.	3. RECIPIENT'S ACCESSION NO.
4. TITLE AND SUBTITLE Avoiding Failure of Leachate Collection and Cap Drainage Systems		5. REPORT DATE June 1986
		6. PERFORMING ORGANIZATION CODE
7. AUTHOR(S) Jeffrey M. Bass		8. PERFORMING ORGANIZATION REPORT NO.
9. PERFORMING ORGANIZATION NAME AND ADDRESS Arthur D. Little, Inc. Cambridge, MA 02140		10. PROGRAM ELEMENT NO. BRD1A
		11. CONTRACT/GRANT NO. 68-03-1822
12. SPONSORING AGENCY NAME AND ADDRESS Hazardous Waste Engineering Research Laboratory U. S. Environmental Protection Agency Cincinnati, OH 45268		13. TYPE OF REPORT AND PERIOD COVERED September 1983 - Nov. 1985
		14. SPONSORING AGENCY CODE EPA/600/14

15. SUPPLEMENTARY NOTES

Project Officer: Jonathan G. Herrmann (513)569-7839

16. ABSTRACT

Failure, caused by a variety of mechanisms, is common to drainage systems of all kinds. Leachate collection and cap drainage systems, which remove excess liquid from hazardous waste land disposal facilities, are no exception. Failure of these systems, however, may be a greater cause for concern than failure, for example, of agricultural drainage systems. This is especially true for leacnate collection systems at hazardous waste disposal facilities. Undetected failures may cause leachate to build up on top of the liner. This can lead to failure of the liner system and contamination of groundwater. Furthermore, failures which are detected may be difficult to repair, and replacement is no longer a simple last resort since excavation of hazardous wastes would be required. Information is presented on those mechanisms which may cause leachate collection and cap drainage systems failure. Furthermore, information on design, construction, inspection, and maintenance for these systems is presented in order to minimize the potential of failure. Techniques to repair a failed system are also described.

17. KEY WORDS AND DOCUMENT ANALYSIS

a. DESCRIPTORS	b. IDENTIFIERS/OPEN ENDED TERMS	c. COSATI Field/Group

18. DISTRIBUTION STATEMENT Release to Public	19. SECURITY CLASS (This Report) Unclassified	21. NO. OF PAGES 142
	20. SECURITY CLASS (This page) Unclassified	22. PRICE

EPA Form 2220-1 (Rev. 4-77) PREVIOUS EDITION IS OBSOLETE

DISCLAIMER

The information in this document has been funded wholly or in part by the United States Environmental Protection Agency under Contract 68-03-1822 to Arthur D. Little, Inc. It has been subject to the Agency's peer and administrative review and it has been approved for publication as an EPA document. Mention of trade names or commercial products does not constitute endorsement or recommendation for use.

FOREWORD

Today's rapidly developing and changing technologies and industrial products and practices frequently carry with them the increased generation of solid and hazardous wastes. These materials, if improperly dealt with, can threaten both public health and the environment. Abandoned waste sites and accidental relases of toxic and hazardous substances to the environment also have important environmental and public health implications. The Hazardous Waste Engineering Research Laboratory assists in providing an authoritative and defensible engineering basis for assessing and solving these problems. Its products support the policies, programs and regulations of the Environmental Protection Agency, the permitting and other responsibilities of state and local governments and the needs of both large and small businesses in handling their wastes reponsibly and economically.

This doument provides information on the design, construction, inspection, maintenance and repair of leachate collection and cap drainage systems to avoid systems failure. The intended audience for this document includes those involved in the review of new and existing hazardous waste facilities. For further information, please contact the Land Pollution Control Division of the Hazardous Waste Engineering Research Laboratory.

Thomas R. Hauser, Director
Hazardous Waste Engineering Research Laboratory

ABSTRACT

Failure, caused by a variety of mechanisms, is common to drainage systems of all kinds. Leachate collection and cap damage systems, which remove excess liquid from hazardous waste land disposal facilities, are no exception. Failure of these systems, however, may be a greater cause for concern than failure, for example, of agricultural drainage systems. This is especially true for leachate collection systems at hazardous waste disposal facilities. Undetected failures may cause leachate to build up on top of the liner. This can lead to failure of the liner system and contamination of groundwater. Furthermore, failures which are detected may be difficult to repair, and replacement is no longer a simple last resort since excavation of hazardous wastes would be required. Information is presented in this document on those mechanisims which may cause leachate collection and cap drainage system failure. Furthermore, information on design, construction, inspection, and maintenance for these systems is presented in order to minimize the potential of failure. Techniques to repair a failed system are also described.

This report was submitted in fulfillment of Contract Number 68-03-1822 under the sponsorship of the U.S. Environmental Protection Agency. This report covers the period from September, 1983 to November, 1985, and work was completed as of January, 1986.

CONTENTS

Foreword....iii
Abstract....iv
Figures....vii
Tables....ix
Acknowledgements....xi

1.0 Introduction....1
1.1 Leachate Generation and Control....1
1.2 Applicable Federal Regulations....3
1.3 Minimum Technology Guidance....7

2.0 Failure Mechanisms....10
2.1 Discussion Of Potential Mechanisms....10
2.1.1 Clogging Mechanisms....10
2.1.2 Non-Clogging Mechanisms....12
2.2 Confirmation Of Mechanisms....12
2.2.1 Confirmation by Experience....13
2.2.2 Confirmation by First Principles....17

3.0 Design....21
3.1 Introduction....21
3.2 System Layout....21
3.2.1 Leachate Collection System....21
3.2.2 Cap Drainage System....26
3.3 General Design Considerations....28
3.3.1 Material Selection....28
3.3.2 Control of Leachate Characteristics....34
3.4 Drainage Layer....36
3.4.1 Material Selection....36
3.4.2 Design Considerations....36
3.5 Collection Pipe Network....39
3.5.1 Capacity....39
3.5.2 Structural Stability....41
3.5.3 Perforations....46
3.6 Filter Layer....47
3.6.1 Granular Filters....49
3.6.2 Geotextile Filters....53
3.7 Other Components....54
3.7.1 Sumps....54
3.7.2 Pumps....56
3.7.3 Discharge Lines....56
3.7.4 Manholes....57
3.7.5 Liquid-Level Monitors....57

CONTENTS (continued)

4.0 Construction....58
4.1 Introduction....58
4.2 Plans and Specifications....58
4.2.1 Detail....58
4.2.2 Specific Plans....59
4.2.3 Phased Development....60
4.2.4 Material....60
4.2.5 Installation Procedures....61
4.3 Construction Quality Assurance Plan....63
4.3.1 Elements of a CQA Plan....63
4.3.2 Inspection Activities....64

5.0 Inspection....69
5.1 Introduction....69
5.2 Regular or Periodic Inspections....70
5.2.1 Visual Inspection....72
5.2.2 Leachate Level Over Liner....75
5.2.3 Leachate Quantity....79
5.2.4 Leachate Quality....83
5.2.5 Television and Photographic Inspection....87
5.2.6 Inspection During Pipe Maintenance....89
5.3 Special Inspections....89
5.3.1 After Construction....92
5.3.2 After First Lift Has Been Placed....92
5.3.3 When Problems Are Identified With System Performance....92

6.0 Maintenance....96
6.1 Introduction....96
6.2 Mechanical Methods....97
6.2.1 Rodding/Cable Machines....97
6.2.2 Buckets....101
6.3 Hydraulic Methods....103
6.3.1 Jetting....103
6.3.2 Flushing....105

7.0 Repair....109
7.1 Introduction....109
7.2 Maintenance Techniques....110
7.3 Chemical Techniques....111
7.4 Replacement Techniques....114
7.4.1 Conventional Systems....116
7.4.2 Alternative Systems....118

References....123

Copyright Notice....129

FIGURES

Number		Page
1	Schematic of a closed landfill cell	2
2	Leachate collection system layout providing alternative paths of leachate flow	23
3	Leachate collection system layouts providing access to collection pipes	25
4	Schematic of a landfill cap	27
5	Landfill geometry assumed for calculating maximum height of leachate over the liner	40
6	Collection pipe installation in a trench	42
7	Collection pipe installation above liner	43
8	Schematic of granular and geotextile filters	48
9	Potential design options for collection or transport of fines	50
10	Particle-size distribution curve	51
11	Typical sump designs	55
12	Checklist for visual and leachate level inspections	74
13	Probable leachate levels before and after clogging at observation points under varying flow conditions	76
14	Analysis of leachate prediction models	82
15	Checklist for television or photographic inspection	90
16	Checklist for maintenance-related inspection	91

FIGURES (continued)

Number		Page
17	Checklist for collection pipe maintenance	98
18	Power rodding machine	99
19	Typical attachments for rodding and cable machines	100
20	Schematic of bucket machine cleaning	102
21	Nozzle designs for high-pressure cleaning	104
22	Sewer ball	106
23	The hinged-disc cleaner (or "scooter")	107
24	Toe drain design	120

TABLES

Number		Page
1	Summary of Westat Data for Leachate Collection Systems	4
2	Failure Mechanisms	11
3	Confirmation of Failure Mechanisms	14
4	Experience with Leachate Collection Systems	15
5	Summary by Facility Type	16
6	Summary by Cause	16
7	Potential for Clogging of Leachate Collection Systems Relative to Agricultural Drains	18
8	Maximum Leachate Levels Given Various Design Assumptions	24
9	Organic and Inorganics Which May Be Present in Waste Leachates	29
10	Chemical Resistance of Polypropylene Versus Polyester	32
11	Chemical Resistance of Cast Iron, Stainless Steel, Bronze, and Monel	33
12	Properties of Typical Geotextile Drainage Materials	37
13	Design Equations for Calculating Vertical Loading Stresses on Flexible Pipe Used in Landfill Drainage Systems	44
14	Particle-Size Requirements for Filters	52
15	CQA Test Procedures	66
16	Summary of Inspection Methods	71
17	Annual Leachate Predictions and Monthly Mean Error Compared to Actual Leachate Production	81

TABLES (continued)

Number		Page
18	Diagnosing Problems	94
19	Quantities of SO_2 and Water for Treatment of Various Sizes of Tile Drains	113
20	The Solubility of Iron and Manganese Tile Deposits in Various Chemical Reagents	115

ACKNOWLEDGEMENTS

Arthur D. Little, Inc. (ADL) prepared this document for EPA's Hazardous Waste Engineering Research Laboratory under Contract No. 68-03-1822. Jonathan Hermmann was the EPA Project Officer. Input to Sections 3 and 4 of the document was provided by the E. C. Jordan Company of Portland, Maine, under subcontract to ADL. Principal technical contributors to the report were Jeffrey Bass (Project Manager), Patricia Deese, John Ehrenfeld, Mildred Broome and Kate Findland for ADL, and Douglas Allen, Dirk Brunner, Guy Cote, Mark Larochelle, Matthew Muzzy and Kenneth Whittaker for E. C. Jordan.

Peer review comments on the draft report were provided by Peter Kmet of the Washington Department of Ecology, Jean-Pierre Giroud of Geoservices, Inc., and Fred Erdmann of Soil & Material Engineers, Inc. Their comments, along with those of the Project Officer, were extremely useful in preparing the final report.

1.0 INTRODUCTION

This document summarizes current knowledge and experience regarding potential failure mechanisms and presents information on factors to consider in design, construction, inspection, maintenance and repair of leachate collection and cap drainage systems. It was written to provide general guidance to design engineers, facility operators, and state and Federal regulatory officials. It should not be considered as a comprehensive design and operation manual for leachate collection and cap drainage systems. Detailed design and operation plans for leachate collection and cap drainage systems at a specific facility should be prepared by a qualified design engineer based on site-specific conditions.

Emphasis is placed throughout the document on avoiding failure of leachate collection systems at hazardous waste facilities. Most of the information presented for leachate collection systems can also be applied to cap drainage systems, since the basic components of the two systems are similar. Failure of cap drainage systems, however, is less critical than failure of leachate collection systems since the cap drainage system is accessible and therefore can be more readily maintained or repaired. Cap drainage systems are discussed separately in this document only when the information presented is significantly different from the discussion of leachate collection systems. The mechanisms by which drainage systems can fail and experience with these mechanisms in leachate collection systems are discussed in Section 2. Sections 3 through 6 describes the design, construction, inspection and maintenance of these systems to avoid failure. Repair of failed systems is discussed in Section 7.

A schematic of a closed landfill cell, showing the leachate collection system and the cap drainage system, is presented in Figure 1. The basic components of the leachate collection system shown are the drainage layer, the collection pipe and the filter layer. Other important components include manholes, cleanout risers, sumps, monitoring equipment and pumps. The function of these components is described in Section 3. The basic components of a cap drainage system are the drainage layer, filter layer and perimeter collection pipes. The cap drainage system collects liquid from over the cap liner which is designed to prevent liquid from infiltrating the waste.

1.1 LEACHATE GENERATION AND CONTROL

Leachate is defined as "any liquid, including any suspended components in the liquid, that has percolated through or drained from hazardous waste" (40 CFR 260.10). Leachate results from the seepage of liquid wastes (or liquids contained in primarily solid wastes) placed in the facility. Leachate is also

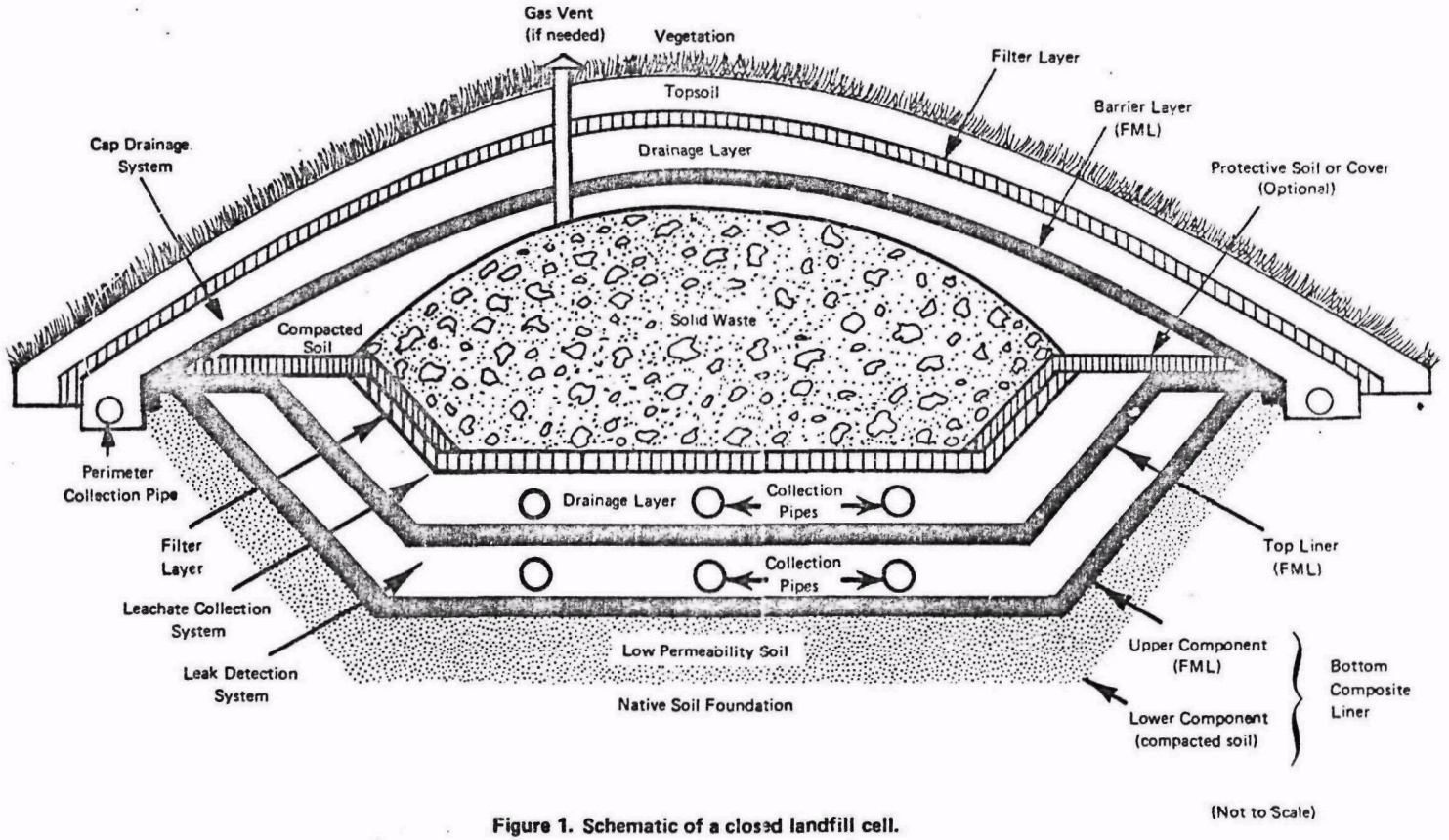

Figure 1. Schematic of a closed landfill cell.
(Source: after EPA, 1985 a)

generated when water contacts the waste mass and becomes contaminated with waste constituents.

Leachate quality depends on the amount of precipitation, type of leachate collection system, types of wastes, time and location of waste placement, and site operating methods. In general, leachate quality is difficult to predict, and may vary considerably from site to site and among different locations in the same facility. Factors affecting leachate quality are discussed in Shuckrow et al. (1982), and information on leachate quality from a number of facilities is presented in Ghassemi et al.(1983).

The quantity of leachate generated at a facility is determined by the water (or liquid) balance at the site. Liquid inputs include liquids in the deposited waste and precipitation. Groundwater flow may also contribute to leachate quantity in facilities constructed in the saturated zone (depending on liner design). Liquid outputs include evaporation, transpiration, and seepage out of the facility. Water storage in the waste mass is also important; the leachate quantity increases as the waste mass reaches saturation. Leachate generation can be minimized by controlling the various parameters in the water balance. The water balance for a facility is discussed in detail in Lutton et al. (1979), and techniques for estimating leachate volume are discussed in Perrier and Gibson (1982).

Low permeability soil and flexible membrane liners are installed to contain waste and leachate and to prevent the contamination of groundwater and surface water near the disposal facility. High leachate levels increase the potential for seepage through a liner system. Leachate collection systems are used to control leachate levels over the liner and thereby reduce the potential for leachate migration. Leachate collection systems that meet current regulatory requirements are designed to maintain liquid levels over the liner at less than 30 cm (1 ft). The system is intended to function effectively through the facility's active life and closure period and until leachate generation has ceased.

Experience with leachate collection systems is limited. The first leachate collection systems were installed in landfills in the early 1970s. Since then, design and operating practices have changed significantly. As a result, experience with "modern" leachate collection system design performance is even more limited. According to the WESTAT data base (EPA, 1983a), approximately 40 percent of the 200 landfills which accept hazardous waste have leachate collection systems. A summary of the WESTAT data pertaining to leachate collection systems is given in Table 1.

1.2 APPLICABLE FEDERAL REGULATIONS

Regulations promulgated under the Resource Conservation and Recovery Act (RCRA) require the use of leachate collection systems for new landfills and waste piles which dispose of hazardous wastes. Regulations which apply to leachate collection and cap drainage systems, or directly apply to the water balance at the site, include (40 CFR 264.301-.310):

TABLE 1

SUMMARY OF WESTAT DATA FOR LEACHATE COLLECTION SYSTEMS

Question	Surveyed Landfills		Estimate of all Landfills
	Number	Percent	Number
Active Landfill	79	100	199
Leachate Collection System (LCS)			
-yes	31	39.2	78
-no	48	60.8	121
LCS has gravel	23	74.2	58
LCS has sand	12	38.7	30
LCS has geotextile	5	16.1	12
LCS has pipe	27	87.1	67
LCS has sumps	25	80.6	62
one	14	58.3	36
two	4	16.7	10
three	1	4.2	3
four	2	8.3	5
six	2	8.3	5
seven	1	4.2	3
LCS has sump pumps	20	64.5	50
LCS has intermediate storage	21	67.7	54
in tanks	8	38.1	20
in surface impoundments	10	47.6	25
in containers	1	4.8	2
other method	3	14.3	8
Onsite leachate treatment	20	66.7	48

(continued)

TABLE 1 (continued)

Question	Surveyed Landfills Number	Surveyed Landfills Percent	Estimate of all Landfills Number
Year LCS Installed			
1973	1	3.3	2
1975	2	6.7	5
1976	3	10.0	7
1977	2	6.7	5
1978	3	10.0	7
1979	3	10.0	7
1980	6	20.0	15
1981	5	16.7	12
1982	5	16.7	12
Total Cost of Materials per LCS			
maximum	$1,470,000		
median	$ 200,000		
minimum	$ 15,000		
Quantity Leachate Collection in 1981			
maximum	5,550,000 gal		
median	22,500 gal		
minimum	0 gal		

Source: EPA, 1983a

264.301 Design and operating requirements.

(a) A landfill (except for an existing portion of a landfill) must have:

(1) A liner that is designed, constructed, and installed to prevent any migration of wastes out of the landfill to the adjacent subsurface soil or groundwater or surface water at any time during the active life (including the closure period) of the landfill. The liner must be constructed of materials that prevent wastes from passing into the liner during the active life of the facility.

(2) A leachate collection and removal system immediately above the liner that is designed, constructed, maintained, and operated to collect and remove leachate from the landfill. The Regional Administrator will specify design and operating conditions in the permit to ensure that the leachate depth over the liner does not exceed 30 cm (one foot). The leachate collection and removal system must be:

(i) Constructed of materials that are:

(A) Chemically resistant to the waste managed in the landfill and the leachate expected to be generated; and

(B) Of sufficient strength and thickness to prevent collapse under the pressures exerted by overlying wastes, waste cover materials, and by any equipment used at the landfill; and

(ii) Designed and operated to function without clogging through the scheduled closure of the landfill.

(c) The owner or operator must design, construct, operate, and maintain a runon control system capable of preventing flow onto the active portion of the landfill during peak discharge from at least a 25-year storm.

(e) Collection and holding facilities (e.g., tanks or basins) associated with runon and runoff control systems must be emptied or otherwise managed expeditiously after storms to maintain design capacity of the system.

264.302 Double-lined landfills.

(3) A leak detection system must be designed, constructed, maintained, and operated between the liners to detect any migration of liquid into the space between the liners.

264.303 Monitoring and inspection.

(b) While a landfill is in operation, it must be inspected weekly and after storms to detect evidence of any of the following:

(1) Deterioration, malfunctions, or improper operation of runon and runoff control systems;

(2) The presence of liquids in leak detection systems, where installed to comply with 264.302;

(4) The presence of leachate in and proper functioning of leachate collection and removal systems, where present.

264.310 Closure and post-closure care.

(a) At final closure of the landfill or upon closure of any cell, the owner or operator must cover the landfill or cell with a final cover designed and constructed to:

(1) Provide long-term minimization of migration of liquids through the closed landfill;

(3) Promote drainage and minimize erosion or abrasion of the cover;

(b) After final closure, the owner must:

(1) Maintain the integrity and effectiveness of the final cover, including making repairs to the cap as necessary to correct the effects of settling, subsidence, erosion, or other events.;

(2) Maintain and monitor the leak detection system in accordance with 264.302, where such a system is present between double liner systems;

(3) Continue to operate the leachate collection and removal system until leachate is no longer detected;

(4) Maintain and monitor the groundwater monitoring system.

1.3 MINIMUM TECHNOLOGY GUIDANCE

EPA (1985a) provides technical guidance on how to meet the double liner standards set forth in the Hazardous and Solid Waste Amendments of 1984.

Specific guidance on leachate collection system design includes:

- A granular drainage layer should be at least 30 cm (12 in.) thick with a minimum hydraulic conductivity of 1×10^{-2} cm/s and a minimum bottom slope of 2 percent.

- Synthetic drainage layers may be used if they are equivalent to the granular design, including chemical compatibility, flow under load, and protection of the FML.

- The drainage layer should include a pipe network which is designed to efficiently collect leachate. The pipe and drainage layer materials should be chemically resistant to the waste and leachate. The pipe should also be strong enough to withstand expected loading.

- A filter layer (granular or synthetic) should be used above the drainage layer to prevent clogging.

- The leachate collection system should cover the bottom and sidewalls of the unit.

Specific guidance on leachate collection system construction includes:

- Granular drainage and filter material should be washed prior to installation to remove fines.

- A written construction quality assurance plan should be followed during construction of the leachate collection system.

- Construction documentation should be kept onsite.

Specific guidance on leachate collection system operation includes:

- The leachate removal system should be capable of continuous and automatic functioning, and should operate automatically whenever leachate is present in the sump. The sump should remove accumulated leachate at the earliest practicable time to minimize leachate head on the liner.

- The system should be inspected weekly and after major storms, and records should be kept to provide sufficient information that the system is functional and operated properly. Weekly recording of the quantity of leachate collected is recommended.

- Collection pipes in the drainage layer should be cleaned out periodically.

In addition, the guidance for flexible membrane liners (FMLs) states:

FMLs in landfill units, and in units with the minimum recommended thickness, should be protected from damage from above and below the membrane by at least 30 centimeters (12 inches) nominal, 25 centimeters (10 inches) minimum, bedding material (no coarser than Unified Soil Classification System (SCS) sand (SP) with 100 percent of the washed, rounded sand passing the 1/4-inch sieve) that is free of rock, fractured stone, debris, cobbles, rubbish, and roots, unless it is known that the FML material is not physically impaired by the material under load (EPA, 1985a).

This guidance may affect leachate collection system design since a maximum particle size over a liner is specified. A geotextile between the liner and drainage layer which is demonstrated to provide adequate protection to the liner would be needed if larger particle sizes are used for the drainage layer.

2.0 FAILURE MECHANISMS

Leachate collection and cap drainage systems can fail or clog due to a variety of physical, chemical, biological, and biochemical mechanisms (Table 2). These mechanisms are discussed in detail in Young, et al. (1982) and Bass et al. (1984). Some of the most common failure mechanisms are those which lead to system clogging. Clogging is defined as the physical buildup of material in the collection pipe, drainage layer, or filter layer to the extent that leachate flow is significantly restricted. Other failure mechanisms which do not involve clogging include differential settling and deterioration of the collection pipe because of chemical attack or corrosion. Failure may also occur because the design capacity is exceeded. In this case liquid is not adequately removed from the system, even though system components may not be physically blocked.

2.1 DISCUSSION OF POTENTIAL MECHANISMS

2.1.1 Clogging Mechanisms

Clogging can be caused by the buildup of soil, biological organisms, chemical (and biochemical) precipitates, or combinations of the three. This buildup can occur either in the collection pipe or in the surrounding drainage or filter layers. Soil clogging (sedimentation or siltation) requires both a source of soils and a mechanism by which they can settle out. Surrounding soils can enter the drainage or filter layers if the particle size in these layers is too large. Alternatively, soil from the drainage and filter layers will enter the collection pipe if the particle-size distribution is too small, or the pipe slot-size is too large. After soils have entered the pipe they can settle out if the flow is insufficient to keep them suspended. Low flow rates can occur throughout the pipe if the slope is too small, or locally in areas of hydraulic perturbations such as poorly designed or installed pipe joints, turns, or intersections. Sedimentation of soils in the collection pipe is one of the most widely recognized clogging mechanisms.

Biological clogging occurs when organism growth fills the collection pipe or interstices of the drainage or filter layers and interferes with normal system flow. Biological growth is dependent on the presence of micro-organisms together with the appropriate nutrients, growth conditions and energy sources. In particular, Vitreoscilla, a filamentous slime-forming organism, and Pseudomonas, a common soil bacteria, are known clogging agents when iron is not present. Enterobacter is also known to contribute to clogging of the area abutting the drain in agricultural systems (Young et al., 1982). Factors thought to influence biological clogging include carbon-to-nitrogen ratio in the leachate, rate of nutrient supply, the concentration

TABLE 2

FAILURE MECHANISMS

Mechanism	Description
Sedimentation	build-up of solid materials in pipe, drain layer or filter layer. Also, siltation or soil clogging.
Biological growth	build-up of biological materials in the pipe, drain layer or filter layer.
Chemical Precipitation	build-up of chemical materials in the pipe, drain layer or filter layer due to chemical reactions.
Biochemical Precipitation	build-up of chemical or chemical and biological material in the pipe, drain layer or filter layer due to biological activity.
Pipe Breakage	collapse of pipe due to overburden or equipment loading which allows entrance of surrounding materials.
Pipe Separation	two adjacent sections of pipe are pulled apart because of overburden or equipment loading or problems with the joint.
Pipe Deterioration	pipe material is weakened or destroyed by chemical attack, oxidation or corrosion, causing failure as with pipe breakage, above.
Other non-clogging problems	includes failure of system components, such as pumps or tanks, and exceeding system or component design capacity.

of polyuronides, temperature, and soil moisture (Avnimelech and Nevo, 1964; Kristiansen, 1981).

Chemical precipitation can occur as the result of simple chemical processes or more complex biochemical processes. Chemical processes include the precipitation of calcium carbonate, manganese carbonate (rhodochrosite) and other insoluble forms (such as sulfides and silicates). Chemical precipitates can form when the pH exceeds 5, and are also dependent on the hardness and total alkalinity of the leachate. Precipitation can be caused by the presence of oxygen, changes in pH, changes in pressure or partial pressure of CO_2, or evaporation of residual liquid.

The principal biochemical precipitates are $Fe(OH)_3$ and FeS, although manganese compounds may also be involved. The biochemical process for iron depends primarily on the availability of dissolved (free) ions (influenced by redox potential, pH, and complexing agents) and on the presence of iron-reducing bacteria. The precipitate is generally mixed with a biological slime, creating a product which is quite adherent and which can very rapidly block flow through a drainage system. The precipitates produced as a result of biochemical activity are generally quite different in form or structure from those resulting from chemical processes alone, and may be more effective in leading to clogging. Chemically precipitated iron, for example, does not adhere to plastic pipe as readily and is more porous than biochemically precipitated iron (Ford, 1980).

2.1.2 Non-Clogging Mechanisms

Design capacity can be exceeded if the system or a component of the system is so undersized that the amount of liquid to be removed is greater than the amount which can be handled by the system. Underestimation of maximum design flow can be the result of a design error, an unanticipated event which causes flows in excess of design limits (such as failure of run-on diversion structures), or a condition which was inadequately accounted for in the original design (such as groundwater inflow). Differential settling can cause insufficient or inconsistent slope and displacement or crushing of collection pipes and can result in the buildup of leachate in localized areas. Problems with slope or pipe displacement and crushing can also be a result of errors in design or construction. Finally, deterioration of construction materials can be caused by chemical attack (acids, solvents, oxidizing agents) or corrosion.

2.2 CONFIRMATION OF MECHANISMS

Much of the above discussion is based on experiences with agricultural drainage systems which do not handle hazardous leachates. Confirmation testing was therefore conducted to verify that the failure mechanisms described above are indeed possible for hazardous waste leachate collection systems. Cap drainage systems are not addressed because they do not handle hazardous leachate.

A three-step approach was utilized to confirm the failure mechanisms:

Step 1: Confirmation by experience;
Step 2: Confirmation by first principles;
Step 3: Confirmation by laboratory investigation.

The first step, confirmation by experience, is the preferred method since it gives positive proof that the mechanism can occur. For example, disposal of waste in the wrong cell caused collection pipe deterioration in a leachate collection system at a hazardous waste landfill. The mechanism, collection pipe deterioration, is confirmed by the fact that it has already happened.

The second step, confirmation by first principles, confirms by mathematical and scientific principles, and by common sense rationale, those failure mechanisms which have not yet been experienced. For example, a bulldozer driving over a weak collection pipe is likely to crush the pipe, whether experience with pipe crushing can be found at a land disposal facility or not. Design, construction, and operation of leachate collection systems must address the possibility of pipe crushing based on an understanding of mechanical principles. In addition, first principles are used to determine whether experience with leachate collection systems at facilities which do not dispose of hazardous wastes is applicable to hazardous waste facilities. Mechanisms which can be demonstrated to be obviously possible independent of actual experience at a hazardous waste facility are considered to be confirmed by first principles.

Finally, mechanisms which were not adequately confirmed by experience or first principles were considered candidates for laboratory investigation. Conclusions from laboratory testing of biochemical precipitation, however, were inconclusive and did not affect the confirmation testing results.

The conclusions made from the three-step confirmation testing process conducted as part of this study are summarized in Table 3. These results indicate that all the failure mechanisms must be considered in the design, construction and operation of leachate collection systems. Special attention should be given to the seven mechanisms which are confirmed or strongly suspected. Consideration must also be given to the prevention of biochemical precipitation since the mechanism is still considered a possibility. The confirmation testing process is described in more detail below.

2.2.1 Confirmation by Experience

Experience with leachate collection system failure mechanisms is summarized in Tables 4, 5 and 6. These tables are based on interviews conducted by Arthur D. Little in late 1983 and on a review of the literature. The interviews included 16 individuals from companies or agencies which design, construct, operate, and/or regulate landfills which have leachate collection systems.

The purpose of the interviews was to determine whether the failure mechanisms discussed above have indeed occurred in the field, not to provide a statistical basis for determining service life or quantifying the potential for failure of leachate collection systems. Information was based on the

TABLE 3

CONFIRMATION OF FAILURE MECHANISMS

Mechanism	Experience	First Principles	Laboratory	Conclusion*
Sedimentation	strong	strong	-	Confirmed
Biological precipitation	moderate	moderate	-	Strongly suspected
Chemical precipitation	weak-moderate	moderate-strong	-	Strongly suspected
Biochemical precipitation	weak	moderate	weak	Suspected
Pipe breakage	moderate	strong	-	Confirmed
Pipe separation	moderate	strong	-	Confirmed
Pipe deterioration	confirmed	-	-	Confirmed
Other non-clogging problems	confirmed	-	-	Confirmed

*A mechanism is

- confirmed if it has occurred at a hazardous waste facility, or if experience at other facilities is considered to be directly applicable, based on first principles.
- strongly suspected if experience at other facilities is not directly applicable, but first principles indicate the mechanism can occur in hazardous waste facilities.
- suspected if experience and first principles are inconclusive, but the mechanism cannot be ruled out at hazardous waste facilities.

TABLE 4

EXPERIENCE WITH LEACHATE COLLECTION SYSTEM

Failure Mechanism	Facility Type	Cause	Comments
Sedimentation	NS	C	no filter installed
Sedimentation	NS	U	general experience
Sedimentation	co-disposal	U	in 1 year old system
Sedimentation	co-disposal	U	of gravel layer and pipe
Sedimentation	municipal	U	general experience
Sedimentation	NS	C	general experience
Biological growth	industrial	D	100 ft. long biological growth flushed out under high pressure
Biological growth	municipal	U	reduction in flow every 2 years; flushed out
Biological growth	municipal	U	of filter fabric
Biological growth	co-disposal	U	on 3/4 inch stone, not clogged
Chemical precipitation	municipal	O	EPA test cell, not clogged
Chemical precipitation	co-disposal	U	iron oxide, not clogged
Chemical precipitation	co-disposal	O	attributed to waste characteristics
Biochemical precipitation	co-disposal	U	in leachate collection wells
Pipe breakage	NS	O	by clean-out equipment if bends greater than 22°, general experience
Pipe breakage	municipal	D	differential settling, improper bedding
Pipe separation	municipal	C	joints not glued
Pipe deterioration	NS	D	problems with ABS pipe, general experience
Pipe deterioration	hazardous	O	from acid or solvent disposed of in wrong cell
Tank failure	co-disposal	D	leachate holding tank
Capacity exceeded	co-disposal	D	under-design, other problems noted
Capacity exceeded	hazardous	O	periodic rather than automatic pumping of sump
Outlet inadequate	co-disposal	D	caused leachate buildup

NS = not specified; O = operation related; D = design related;

C = construction related; U = undetermined.

TABLE 5

SUMMARY BY FACILITY TYPE

Mechanism	Facility Type				Total
	Municipal	Co-disposal/ Industrial	Hazardous	Not Specified	
Sedimentation	1	2	-	3	6
Biological growth	2	2	-	-	4
Chemical precipitation	1	2	-	-	3
Biochemical precipitation	-	1	-	-	1
Pipe breakage	1	-	-	1	2
Pipe separation	1	-	-	-	1
Pipe deterioration	-	-	1	1	2
Other non-clogging problems	-	3	1	-	4
TOTAL	6	10	2	5	23

TABLE 6

SUMMARY BY CAUSE

Design related	6
Construction related	3
Operation related	5
Unknown	9

experience of the individuals interviewed. Information which is based on general experience is noted in the comments of Table 4.

Based on an analysis of Tables 4, 5, and 6 the following preliminary conclusions and observations can be made regarding the failure mechanisms:

- Exceeding design capacity was confirmed by experience at a hazardous waste landfill. Failure occurred when an operator failed to activate the sump pump, allowing leachate to back up in the facility. This type of failure would not occur if an automatic sump pump were used, provided the pump was turned on and properly maintained.

- Collection-pipe deterioration was confirmed by experience at a hazardous waste landfill. Failure occurred when an operator disposed of a waste which was incompatible with the materials of construction of the leachate collection system. This type of failure could occur with any type of leachate collection system, regardless of design.

- There is strong evidence that sedimentation is a problem at all types of leachate collection systems. Two of the six sedimentation mechanisms noted in Table 4 were based on general experience where the facility type was not specified. This experience may include hazardous waste leachate collection systems.

- In addition to the problem of exceeding design capacity, other non-clogging problems noted include tank failure and inadequate outlet design capacity. These problems are independent of the type of waste handled by the facility and independent of operational practices.

- Biological growth was a problem at four sites which did not exclusively dispose of hazardous waste. Three of the four sites handled municipal waste (one as co-disposal). Confirmation by first principles is needed to demonstrate that biological growth may be a problem in sites which exclusively dispose of hazardous wastes.

- While chemical precipitation was noted at three sites, two of these did not involve system clogging. As with biological growth, the potential for chemical precipitation in a hazardous waste environment should be demonstrated.

- Biochemical precipitation was noted in only one site where leachate collection wells rather than a more conventional leachate collection system were utilized.

2.2.2 Confirmation by First Principles

Confirmation by first principles is based on the analysis conducted by Bass *et al*. (1984). The conclusions of this analysis are summarized in Table 7. Bass *et al*. (1984) utilized failure mode analysis to examine drainage-system failure mechanisms and to determine the conditions needed for the mechanisms to occur. The conditions expected to be present at agricultural drainage systems, sanitary landfill leachate collection systems, and hazardous

TABLE 7

POTENTIAL FOR CLOGGING OF LEACHATE COLLECTION SYSTEMS RELATIVE TO AGRICULTURAL DRAINS

Mechanism	Agricultural Drains	Sanitary Landfills	Hazardous Waste Landfills	Significant Differences
Sedimentation	*	-	-	More careful design and construction expected
Chemical ($CaCO_3$)	*	*	-	Lower pH expected
Biochemical (Ochre, Fe)	*	*	-	Toxicity to indigenous bacteria, lower pH
Biological	*	*	-	Toxicity to indigenous bacteria, lower pH
Differential Settling, Crushing	*	+	+	Compaction, greater equipment loading
Deterioration	*	*	+	Chemicals, solvents, lower pH
Exceed Design Capacity	*	-	-	Daily cover restricts leachate flow to system

- = less likely
+ = more likely
* = same likelihood as agricultural drains

Source: Bass *et al.*, 1984.

waste landfill leachate collection systems were then compared to estimate the relative potential for system failure.

A similar approach is used in the present study to relate experience at municipal, co-disposal and industrial facilities, as well as experience which is not facility specific, to expected conditions at hazardous waste facilities. Mechanisms which were found to be active in other facilities, due to design, construction or operational conditions that may also be found at hazardous waste facilities, are considered to be possible at hazardous waste facilities.

Table 4 gives six examples of sedimentation problems at leachate collection systems, two of which are based on general experience. The cause of sedimentation is generally difficult to determine, although in two cases construction problems were cited. The construction problems were of the type that could occur at any facility; sedimentation in one case was due to a construction error and in the other case related to construction techniques which allow surface sediments to wash into open excavations. Any leachate collection system will need to be designed, constructed and operated to avoid clogging with sediments.

Biological growth was noted at four sites--two municipal, one co-disposal and one industrial facility. The industrial site was a paper mill sludge disposal facility with a leachate collection system designed with a 0% slope. The lack of flushing action in the pipe may have been a factor in the formation of the 30 m (100 ft) long biological mass which packed the leachate collection pipe. This case is particularly interesting because of the degree of clogging experienced, and because it is the only one of the four cases of biological clogging noted where municipal refuse was not present. Research conducted by Kobayashi and Rittmann (1982) indicates that micro-organisms can be used to biodegrade a wide variety of hazardous organic compounds. Furthermore, Ghassemi et al. (1983) found that organic and inorganic constituents identified in 30 different leachates from eleven hazardous waste landfills fall within the reported ranges for municipal landfill leachates. While data on microbiological populations in actual hazardous waste leachates are limited, the above observations indicate that micro-organisms are expected to be active in hazardous waste leachate collection systems. Given the range of micro-organisms found in the environment and in waste materials, and given the range of conditions which can be expected in various leachate collection systems, it would be difficult to rule out biological clogging as a failure mechanism based on first principles.

Chemical precipitation was found at one municipal and two co-disposal sites. In two of these cases, the chemical precipitate coated only portions of the drainage layer, causing the gravel to be cemented together in one case, but in neither case was leachate flow significantly restricted. Chemical precipitation involves relatively simple chemical reactions. Since chemicals which can form precipitates, including Ca, Fe, Mn and Mg, are relatively common leachate constituents (Ghassemi et al., 1983), chemical precipitation would be expected to occur in some hazardous waste leachate collection systems just as it has occurred at municipal and co-disposal facilities. However, the

ability of the precipitates to actually clog a leachate collection pipe, drainage layer or filter layer has not been demonstrated.

Experience with biochemical precipitation in leachate collection systems is extremely limited. In addition, the conditions needed for biochemical precipitation to occur are more complex than those needed for chemical precipitation or biological growth alone. Biochemical precipitation of iron, however, is a common and serious problem in certain agricultural drainage systems (Ford, 1980), and the range of conditions expected in hazardous waste leachate collection systems does not rule out this mechanism in every case.

Breakage of collection pipe (due to operational problems (improper use of clean-out equipment) and design problems (differential settling, improper bedding, pipe bends)), was noted in two cases in Table 4. Collection pipes can also be damaged by equipment loading during construction and during placement of the first lift of waste. To avoid damaging collection pipes, leachate collection system design and operation may include:

- placement of collection pipes in trenches;
- careful attention to pipe bedding and material selection; and
- establishment of specific traffic patterns to keep heavy equipment off all collection pipes.

In addition, collection pipes may be physically inspected after construction and after the first lift of waste is placed to make sure that the pipe has not been damaged or broken.

Experience found with separation of collection pipe is limited to a single instance at a municipal landfill. In this case, a contractor neglected to glue the pipe joints as specified in the design. The problem was discovered during a preliminary inspection and was corrected prior to placement of the first lift of waste. Construction errors are independent of facility type, and are a function of the level of construction quality assurance used.

Deterioration of collection pipe and exceeding of design capacity were confirmed by experience at hazardous waste landfills. Experience with other non-clogging mechanisms includes failure of a leachate holding tank because of inadequate design, and high leachate levels due to insufficient outlet capacity. Both of these mechanisms, as well as a second case of exceeded capacity, occurred at co-disposal facilities which accept municipal, industrial and/or hazardous wastes. The failure mechanism in each case, however, is independent of waste type, and could have occurred at a hazardous waste facility.

3.0 DESIGN

3.1 INTRODUCTION

Beginning July 26, 1982, RCRA regulations for hazardous waste treatment, storage, and disposal facilities (40 CFR Part 264) required the use of leachate collection systems in new, or new portions of, waste piles and landfills. The leachate collection system is designed to collect and remove leachate above the primary liner throughout the lifetime of the facility. In addition, Lutton (1979) recommends the use of drainage layers in cap or final cover systems for disposal units to collect and remove infiltrating precipitation. This eliminates additional liquid inputs to the waste mass during the facility's closure and post-closure care period.

Regulatory requirements for leachate collection and cap drainage systems in hazardous waste disposal facilities are presented in Section 1.2. Design guidance for leachate collection systems based on the Hazardous and Solid Waste Amendments of 1984 is summarized in Section 1.3.

The basic component of a leachate collection or cap drainage system is the drainage layer. The drainage layer generally consists of 30 cm (1 ft) or more of granular soil containing a network of perforated pipe, but may also be made of synthetic materials (i.e., geotextile). The Minimum Technology Guidance (EPA, 1985a) recommends that the drainage layer cover the entire liner, have a hydraulic conductivity of 10^{-2} cm/s or more, and have a minimum slope of 2 percent. A granular or synthetic (geotextile) filter layer is generally placed between the drainage layer and the waste (or topsoil for a cap) to keep small particle-size soils and other materials from clogging the drainage layer. Other components of these systems include sumps, pumps, access structures, and monitoring and control devices.

This Section addresses the design considerations important in preventing failure of leachate collection and cap drainage systems. General guidance on leachate collection system design can be found in EPA (1983b).

3.2 SYSTEM LAYOUT

Layout or configuration of leachate collection and cap drainage systems varies from site to site depending on factors such as the type of waste material being deposited, site topography, facility size, climatic conditions, design preference and regulatory requirements.

3.2.1 Leachate Collection System

The leachate collection system is designed to facilitate leachate flow over the liner and out of the system. Leachate flows out of the waste and through the drainage layer to a collection point (sump) where it is pumped out

of the containment area for treatment. Layout of the system should provide alternative paths for leachate to flow to the collection point, should allow for access to the drainage layer and collection sump for inspection and maintenance, and should allow for minor subsidence of the drainage layer.

3.2.1.1 Alternative Paths of Leachate Flow

Figure 2 is an example of a leachate collection system which provides alternative paths of leachate flow. The system is designed to maintain leachate levels at less than 30 cm (1 ft) even if clogging decreases the hydraulic conductivity of the drainage layer or one or more of the collection pipes clogs. Table 8 gives the estimated maximum leachate level over the liner at different drainage-layer permeabilities and collection-pipe spacings. A 6 m (20 ft) pipe spacing is effective in maintaining leachate levels at less than 30 cm even if the hydraulic conductivity of the drainage layer decreases nearly two orders of magnitude (Cases 1, 2 and 3), or if a pipe clogs (effectively increasing the spacing between pipes, as in Cases 4 and 5). However, if Case 5 were the initial design (collection pipes at a 24 m (79 ft) spacing), an order of magnitude decrease in hydraulic conductivity would result in leachate levels in excess of the 30 cm standard (Case 6).

3.2.1.2 Access

Layout of the leachate collection system should also allow for access to the entire collection pipe network, including the sump, for inspection and cleaning. This is important for two reasons. First, since access to the granular or synthetic drainage material is not possible, access to the pipe network is needed in case the capacity of both components is reduced by clogging (as in Case 6 in Table 8). The pipe network can be unclogged and maintained to maximize system capacity if access is provided. Second, the collection pipe network is sensitive to damage, especially during construction and during placement of the first lift of waste. Access is needed to allow for inspection of the pipe network to ensure that the network was constructed as designed, and was not damaged in the initial placement of waste. If problems are found, the pipe network can be repaired before leachate collection problems occur, and before the damaged area is buried in several layers of hazardous waste.

Access to the collection pipe network is provided by installing a manhole or a riser pipe at each end of every pipe. Two possible designs are shown in Figure 3. Access at both ends of the collection pipe is needed for most inspection and maintenance procedures (Sections 5 and 6). In addition, bends or branches in collection pipes at angles greater than 45 degrees and pipe lengths greater than 300 m (1000 ft) between access points should be avoided. The designs in Figure 3 are intended to minimize the number of manholes required in order to minimize stress on the liner, reduce construction costs and simplify waste placement.

Optimum spacing of the collection pipe, manholes and riser pipes to maintain leachate levels less than 30 cm (1 ft)and allow for access to the system may be determined using site-specific information such as topography, climate, waste characteristics (e.g., expected leachate generation, propensity

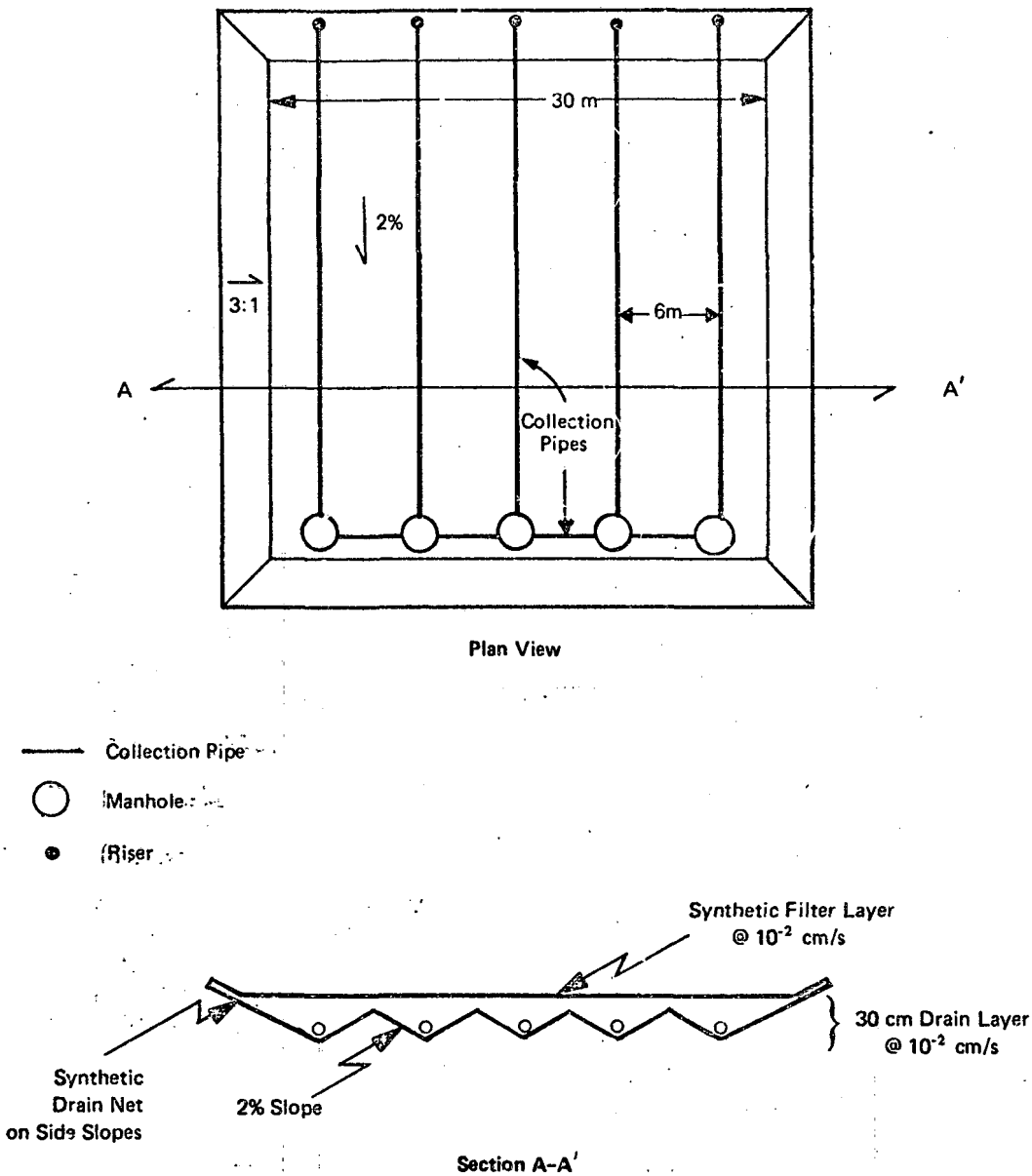

Figure 2. Leachate collection system layout providing alternative paths of leachate flow.

TABLE 8

MAXIMUM LEACHATE LEVELS GIVEN VARIOUS DESIGN ASSUMPTIONS

Parameter	Unit	Case 1	Case 2	Case 3	Case 4	Case 5	Case 6
Maximum Leachate Level*	cm	5	17	29	11	21	67
Permeability	cm/s	10^{-2}	10^{-3}	3.5×10^{-4}	10^{-2}	10^{-2}	10^{-3}
Pipe Spacing	m	6	6	6	12	24	24
Leachate Production Rate	cm/year	100	100	100	100	100	100
Slope	--	.02	.02	.02	.02	.02	.02

*Approximate level based on Figure 2; calculated using the equation in Moore (1980) (see Section 3.4).

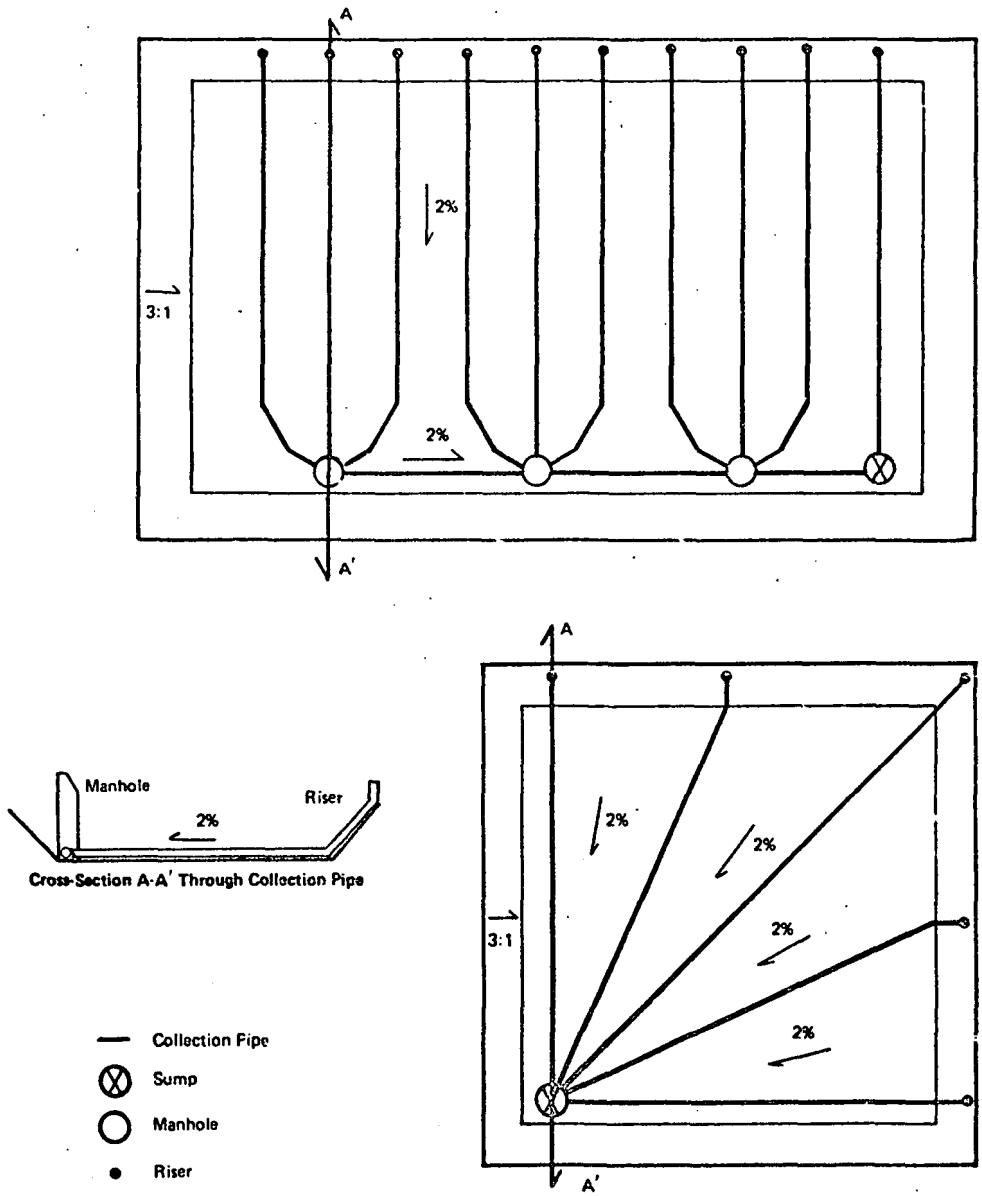

Figure 3. Leachate collection system layouts providing access to collection pipes.

for clogging), and facility size including future expansion needs. (See Sections 3.4 and 3.5.)

3.2.1.3 Minor Subsidence

Subsidence of the waste or sublayers may result in a final grade which does not allow flow of leachate through the drainage layer to the sump. Uneven settling in localized areas of the disposal cell may result in low spots in the drainage layer and lead to pooling of the leachate and eventual clogging. Settlement may also result in the buckling of collection pipes, the breaking of joints, and eventual failure of the drainage system. Subsidence may be controlled by preloading the waste disposal area during construction to allow the sublayers to come to final grade before the drainage system is installed and the wastes are placed. A more commonly used approach in controlling subsidence is to factor in the effects of subsidence on final grade slopes in the design calculations. The expected consolidation of the wastes and sublayers can be calculated based on knowledge of the sublayer material properties (e.g., density, composition, compatibility) and waste characteristics (e.g., void fraction, density). An allowance or safety factor may then be incorporated into the design to ensure that the final slope after settlement will be as specified in the design. In addition, flexible joints should be used between collection pipes which may be subjected to stresses created by uneven waste subsidence.

3.2.2 Cap Drainage System

The primary purpose of the cap is to minimize infiltration of precipitation into the waste mass after closure by increasing runoff and evapotranspiration. The cap is generally constructed in several layers, including a low permeability barrier layer, a drainage layer, a filter layer, and a vegetated topsoil layer which is graded to increase runoff and reduce erosion (Figure 4). The drainage layer removes precipitation which infiltrates through the upper layers of the cap and prevents liquid from accumulating over the barrier layer. Cap design is discussed in Lutton et al. (1979).

The drainage layer is typically a granular soil, although geotextile materials may also be used. The U.S. Environmental Protection Agency (EPA, 1982) recommends that a drainage layer be at least 30 cm (1 ft) thick (if soil is used) and have a permeability of at least 10^{-3} cm/s.

The layout of a cap drainage system is less complicated than a leachate collection system since a collection pipe network is generally not incorporated in the drainage layer (although perforated or slotted pipe located at the perimeter of the cap is used to convey water from the drainage layer to surface drainage facilities). A major concern is that the cap drainage system be able to function with minimum maintenance (pursuant to 40 CFR 264.310), even with minor subsidence of the cap. As a result, steeper slopes than would be necessary for drainage alone are used so that flow through the drainage system is maintained. The optimal slope will be shallow enough to minimize erosion of the topsoil layer from surface runoff, and steep enough to avoid ponding of water over the barrier layer if minor subsidence occurs.

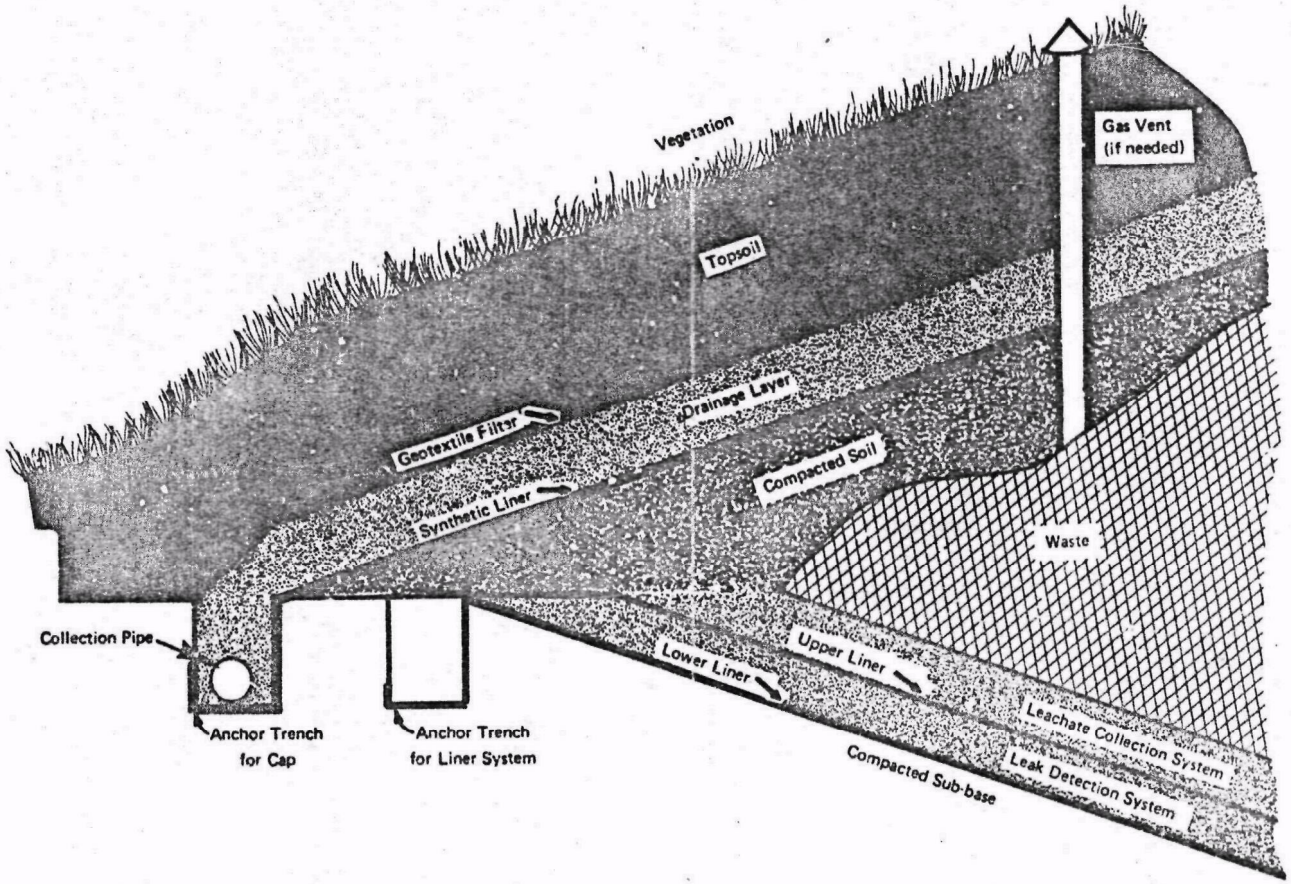

Figure 4. Schematic of a landfill cap.

3.3 GENERAL DESIGN CONSIDERATIONS

Leachate collection system design is affected by the characteristics of both the expected waste to be disposed of and the expected leachate to be generated from that waste. The liquid content of the waste contributes to the volume of leachate expected, and the particle size of the waste influences design of the filter layer. Hydraulic conductivity of the waste also affects the ability of the leachate to reach the collection system.

Leachate characteristics which influence design include the volume expected, suspended solids, pH, redox potential, and chemical constituents such as organics, calcium, iron, manganese and nutrients. These characteristics are considered in sizing system components, selecting construction materials, and designing individual components to avoid failure by the mechanisms discussed in Section 2.

This section discusses material selection for chemical compatibility and the ability to influence leachate characteristics once the facility is in operation. The application of this information is limited to leachate collection systems since cap drainage systems are not exposed to waste. Specific design considerations for each component are discussed in subsequent sections.

3.3.1 Material Selection

Each component of a leachate collection system must be constructed of materials which are chemically resistant to the waste managed and leachate expected at the facility (40 CFR 264.301a). In assessing chemical/material compatibility, the designer should recognize that the resistance of any given material to chemical attack is a function of several elements including the specific chemical, the concentration of the chemical, temperature, and duration of contact. Examples of organic and inorganic constituents that may be present in leachate are given in Table 9.

In general, data regarding the resistance of various construction materials to specific chemicals are limited. The data that are available originate from sources such as manufacturers' product testing information, reference texts and engineering handbooks, reports from private or academic research and testing institutions and government-sponsored studies. These data are typically reported for pure compounds, with limited information on dilute solutions.

Little information is available on the chemical resistance of granular materials that would be used in filter or drainage layers. A number of studies have shown that strong bases will partially solubilize silica - containing soil constituents (Nutting, 1984; Grim, 1953). Since sand is predominantly silica in composition, drainage or filter layers constructed of sand which come in contact with alkaline wastes may be susceptible to structural damage. Silica dissolution may cause the formation of large voids and channels and may ultimately lead to collapse of the filter or drainage layers.

Geotextiles are made from various single or multi-component petroleum-based polymers such as polypropylene, polyester, and polyethylene. The

TABLE 9

ORGANICS AND INORGANICS WHICH MAY BE PRESENT IN WASTE LEACHATES

Type	Group	Class	Examples
Organic	Acids		acetic, propionic, butyric, lactic
	Bases		aniline
	Neutral Polar	Alcohols & Phenols	methanol, isobutanol, phenol, pentachlorophenol
		Acid Anhydrides	acetic anhydride benzoic anhydride
		Glycols	ethylene glycol
		Aldehydes	formaldehyde butyraldehyde
		Esters	bis(2-ethyl hexyl) phthalate di-n-butylphthalate
		Ethers	methyl ethyl ether diethylether
		Ketones	acetone, methylethylketone 2-hexanone
		Halogenated	vinyl chloride, chlorinated ethanes, ethylenes, methylene chloride, chloroform
	Neutral Non-Polar	Aliphatic Hydrocarbons	propane, butane, methane
		Aromatic Hydrocarbons	benzene, toluene, xylene naphthalene
Inorganic	Acids		hydrochloric, hydrofluoric, nitric, sulfuric

(continued)

TABLE 9 (continued)

Type	Group	Class	Examples
	Bases (Alkalies)		soda ash (NaOH) potash (KOH) magnesium hydroxide
	Salt	Acid	ammonium chloride
		Base	sodium acetate sodium carbonate
		Neutral	sodium chloride potassium sulfate
	Metals		lead, chromium, mercury

Source: From Haxo, 1983

majority of all geotextile fabrics are composed of either polyester or polypropylene. As shown in Table 10, geotextiles made from polypropylene are, in general, more resistant to chemicals than are geotextiles made from polyester.

The most commonly used materials for leachate collection pipe are thermoplastics, although vitrified clay, asbestos cement and concrete, ductile iron and fiberglass may also be used. With the exceptions of fiberglass and thermoplastics, data regarding resistance of these materials to specific chemicals are limited. Data regarding the resistance of fiberglass and thermoplastic materials to specific chemicals are often supplied in manufacturers' product literature. Since there are many formulations for thermoplastics (e.g., polyvinyl chloride (PVC), chlorinated polyethylene (CPE)) and fiberglass (using various polyethylene and polyester resins) care must be taken to select the proper formulation of piping material for a specific waste application.

Sump materials must be compatible with the physical and chemical properties of the leachate. Materials which may be used include:

- concrete;
- concrete with fiberglass, plastic, or brushed-on epoxy liner material; and
- PVC, ABS or fiberglass reinforced vessels.

Pump materials should be resistant to the corrosive or chemically-active environment. Normally pumps are constructed of cast iron with stainless steel or bronze shafts, gates and seals. Table 11 presents general information on the chemical resistance of these materials. Pumps may also be constructed of stainless steel and PVC, and may be coated with Teflon liners, aliphatic urethane coatings, or epoxy coatings. Valves are available in fiberglass, PVC, CPE, polyethylene, stainless steel, and metal fabricated with a variety of chemically resistant coatings.

Chemical resistance data for many chemical/material combinations either are not available or are limited in scope. Empirical methods or laboratory testing may be necessary to estimate the chemical resistance of certain materials to chemicals.

In general, two types of testing can be performed: exposure testing, and material property testing. Exposure testing attempts to simulate expected in-service conditions to which a material in direct contact with chemicals will be subjected. Testing conditions such as temperature, duration of exposure and chemical concentration may be varied to provide information on the short- and long-term resistance of the material. The most widely used exposure test method is the immersion test. Procedures for conducting immersion tests can be found in ASTM D471-79 (Rubber Property - Effect of Liquids) or ASTM D543 (Resistance of Plastics to Chemical Reagents). Similar procedures could be adopted for immersion testing of other construction materials. For example, EPA requires waste-liner compatibility testing for flexible membrane liners. Two methods, EPA 9090 and NSF Standard No. 54, are generally recommended. These and other test method are evaluated in Tratnyek et al. (1984).

TABLE 10

CHEMICAL RESISTANCE OF POLYPROPYLENE VERSUS POLYESTER

	Polypropylene	Polyester
Mineral Acids, weak	Excellent	Good
Mineral Acids, strong	Excellent	Poor
Oxidizing Acids, conc.	Good to Poor	Poor
Alkalies, weak	Excellent to Good	Good
Alkalies, strong	Excellent to Good	Poor
Alcohols	Excellent to Good	Good
Ketones	Excellent to Good	Poor
Esters	Excellent to Good	Good
Hydrocarbons, aliphatic	Good to Fair	Good
Hydrocarbons, aromatic	Good to Fair	Poor to Fair
Oils, vegetable, animal, mineral	Good	Good

Source: Bolz and Tuve, 1976.

TABLE 11

CHEMICAL RESISTANCE OF CAST IRON
STAINLESS STEEL, BRONZE AND MONEL

Metal	Subject to Corrosion by	Resistant to
Cast Iron	all water solutions; moist gases, dilute acids, acid-salt solutions	concentrated acids (nitric, sulfuric, phosphoric), weak or strong alkalies, organic acids
Stainless Steel	inorganic acids, ammonia, mercury, oxidizing salts (Fe, Cu, Hg)	water, caustic and mild alkalies, organic acids, neutral and alkaline organic compounds, dry gases
Bronze	mercury and its salts, aqueous ammonia, saturated halogen vapors, sulfur and sulfides, oxidizing acids (nitric, concentrated sulfuric), oxidizing salts (Hg Ag, Cr, Fe, Cu), cyanides	water, sulfate and carbonate solutions, dry halogens alkaline solutions, petrochemicals, non-oxidizing acids (acetic, hydrochloric, sulfuric)
Monel	inorganic acids, sulfur, chlorine, acid solutions of ferric, stannic or mecuric salts	food acids, neutral and alkaline salt solutions, dry gases, most alkalies, ammonia

Source: Bolz and Tuve, 1976.

Material property testing is usually performed before and after exposure tests to provide a comparative basis for establishing changes in properties after the material has been exposed to a chemical or leachate. Commonly measured properties include:

- weight change;
- swelling or shrinking;
- tensile strength; and
- hardness.

Visual inspections, optically aided or unaided, may also be useful for assessing changes not necessarily detectable in any of the above property tests. Surface cracks, inclusions and other material defects may be uncovered in materials such as vitrified clay, ductile iron, and concrete or cement. Visual inspection may uncover reactivity of leachate with a plastic material as manifested by discoloration, delamination or bubbling of the material.

Numerous methods are available for conducting exposure and material properties tests. The selection of the most appropriate technique depends on the particular material and property to be tested.

3.3.2 Control of Leachate Characteristics

Controlling the wastes placed in a landfill may provide a means to prevent or mitigate the potential for failure of leachate collection systems. In many cases, the failure of a leachate collection system is attributed at least in part to the wastes disposed of at the facility. For example, at a site in California which experienced chemical deposition and solidification, clogging was attributed to "the variations in the type of waste handled and hence .... the leachate characteristics" (MEESA, 1984). Attention must be given both to the chemical and physical characteristics of the waste, as well as the manner in which the waste is placed.

The first step in controlling leachate characteristics to minimize failure of a leachate collection system is to not dispose of wastes which may adversely affect the functioning of the system. This would include not accepting any liquid wastes or any wastes which are incompatible with system components. Not accepting bulk liquid wastes, which is required under the Hazardous and Solid Waste Amendments of 1984, significantly reduces leachate generation. In the California facility mentioned above, about 30% of the wastes were liquid industrial wastes. Not accepting incompatible wastes is necessary since the system is constructed of materials which are resistant only to certain types of waste. Disposal of incompatible wastes can result in failure of a component due to material degradation. In one case discussed in Section 2, for example, failure of a hazardous waste leachate collection system was attributed to disposal of a solvent or acid in a cell which was not designed for such wastes. Segregating wastes with different chemical characteristics into different cells may also be useful in avoiding leachate collection system failure, since construction materials can be selected for a narrower range of waste characteristics.

The second step for controlling leachate characteristics to avoid failure involves careful selection of wastes placed in the first lift. These wastes

should be high-permeability wastes and may have special chemical characteristics. High-permeability wastes are placed in the first lift to facilitate the flow of leachate to the collection system. Special waste characteristics may include wastes of relatively low pH, wastes which inhibit biological activity, and wastes which do not contain high iron, calcium, magnesium, nutrient, or sediment content. The chemical characteristics desirable in the first lift of waste vary with the leachate characteristics expected at the facility, and the failure mechanisms which are expected to be active.

Proper placement of the first lift of waste is also critical in maintaining leachate collection system performance since wastes are deposited directly on top of the exposed leachate collection system. The movement of equipment and careless dumping of the waste on top of a granular filter layer may result in ruts and/or compaction of a granular filter layer beyond design specifications for proper filtration. Filter layers of geotextiles may be ripped or punctured during careless waste placement activity. The underlying leachate collection piping may also be damaged (e.g., pipe buckling, breaking of joints) during waste placement. Initial placement of wastes should be performed using equipment properly sized for the job. Sizing of equipment should consider the ability of the underlying drainage and filter layers to withstand vertical loading, which is a function of the characteristics of the drainage or filter materials and the maximum allowable loading stresses for the collection pipes. Waste placement should proceed ahead of the placement equipment, and wastes should be dumped as close to ground level as possible. Equipment movement on the waste placement area should be limited to the portion covered with the initial or subsequent layers of wastes.

Controlling waste characteristics in later lifts may be difficult because of restrictions on storing wastes onsite and the difficulty in controlling the wastes which come through the gate. This may also be a problem during the first lift of waste. Where possible, however, waste should be placed to reduce the possibility of clogging. For example, placing iron-containing waste in portions of the landfill where the leachate pH is low and/or the redox potential is low (i.e., oxidizing) should maintain any iron leached out at the higher ferric oxidization state and reduce the possibility of iron deposition since ferrous ions are oxidized rapidly in acidic conditions. This approach, however, will have limited applicability in large landfills which accept a variety of wastes, and where leachate from several parts of the cell drains into a common leachate collection system. In this case leachate characteristics in the collection system itself would be very difficult to control.

In general, the effects of waste characteristics on the leachate collection system should be considered in the placement of wastes in the landfill. This is especially important during placement of the first lift of waste. While waste placement may be difficult to control at some facilities, waste characteristics do influence the function of the leachate collection system. This correlation should be understood by the facility operator and waste placement should be controlled where possible to avoid potential problems with the leachate collection system.

3.4 DRAINAGE LAYER

3.4.1 Material Selection

Drainage layers generally consist of granular soils such as coarse sands which provide the required hydraulic conductivity (10^{-2} cm/s) and protect the underlying flexible membrane liner. The particle-size distribution of the drainage layer must be selected to allow liquid transport, prevent puncture of the underlying synthetic liner, and minimize migration of filter-layer materials into the drainage layer.

Geotextiles may be used as a substitute for granular material in portions or all of the drainage layer. Geotextile materials include needlepunched, non-woven polypropylene or polyester fabric and polyethylene grids. Combinations of the two may also be used; for example, placing a grid between two layers of geotextile fabric. Properties of typical geotextile drainage materials are given in Table 12.

The primary advantages of using a geotextile drainage layer are:

- geotextiles may be more accessible or less expensive than granular material in a given location;
- geotextiles are thin compared with granular drainage layers and therefore allow for larger disposal capacity; and
- geotextiles can be placed on steeper side slopes than granular materials, again allowing for larger disposal capacity.

The primary disadvantages of using a geotextile drainage layer are:

- geotextiles are thin and may be more susceptible to clogging than granular materials;
- the hydraulic conductivity of some geotextiles may decrease up to two orders of magnitude under loading conditions (Giroud, 1981); and
- experience with geotextiles in land-disposal applications is limited and their ability to perform on a long-term basis is unproven.

3.4.2 Design Considerations

The design of the drainage layer will be based primarily upon the system hydraulics necessary to maintain a leachate level over the liner of less than 30 cm (1 ft). Protection requirements for the synthetic liner should also be addressed as well as the physical properties of the materials (e.g., ability to place granular materials on side slopes, physical strength of geotextiles). The design for the filter layer (Section 3.6) will usually follow drainage layer design. Design of the collection pipe network (Section 3.5) will occur concurrently.

TABLE 12

PROPERTIES OF TYPICAL GEOTEXTILE DRAINAGE MATERIALS*

Product Name	Manufacturer	Material Type	Weight, oz/yd^2 (ASTM D1910)	Thickness, mils (ASTMD1777)	Permeability, cm/s	Equivalent Opening Size, U.S. Std. Seive Size (COE CW-02215)
Typar Spunbonded, 3601	DuPont	non-woven, polypropylene	6	18	1.4×10^{-2}	140 - 170
GTF-125D	Exxon	non-woven, polypropylene	4	45	1×10^{-1}	50 - 100 (ASTM .03.81.08)
Fibretex, 400	Crown Zellerbach	non-woven, polypropylene	no data	110	3×10^{-1}	80 - 100
Bidim, U34	Quline Corp.	non-woven, polyester	8	100	3×10^{-1}	70 - 100
Trevira Type 1120	American Hoest Corp.	non-woven, polyester	6	100	no data	50 - 70
Tensar DN-3	Tensar Corp.	polyethylene grid	20.6	160	5×10^{-4} m2/s**	7mm x 7mm
Conwed Geo-Net XB8200	Conwed	polyethylene grid	20.2	160	5×10^{-4} m^2/s**	no data

*1 oz/yd^2 = 33.9 gm/m^2
1 mil = 1.0254mm
1 lb = .45 kg

**Transmissivity under pressure. For comparison, a 30 cm (1 ft) thick granular layer with a permeability of 1×10^{-1} cm/s has a transmissivity of 3×10^{-4} m^2/s

Source: Vendor product information.

The movement of leachate through the drainage layer is primarily a function of the liner slope, collection-pipe size and spacing, the number and size of perforations in the collection pipe, hydraulic conductivity of the drainage material, and rate of leachate generation. A variation in any one of these parameters may affect the requirements of the other parameters if a maximum head of 30 cm (1 ft) is to be maintained.

The anticipated volume of leachate within the drainage system must be determined so that the components of the drainage layer can be sized appropriately. Leachate within the landfill can come from the liquid in the waste, precipitation and, in some cases, groundwater flow. The amount of liquid generated from the waste may be determined if the moisture content of the waste is known. As a conservative estimate, it can be assumed that the quantity of leachate generated from a waste is equal to the moisture content of the waste times the volume of waste deposited. In reality, however, the amount of leachate generated from the waste will be less than this value since the waste will retain and store a certain volume of liquid (called the "field capacity"). In some cases, liquid in the waste may not make any contribution to leachate quantity, but may reduce the time required for leachate to appear in the leachate collection system (i.e., the field capacity of the waste will be reached more quickly).

Leachate produced from infiltrating precipitation may be estimated using a computer model. Two examples of computer models are:

1. HELP (Schroeder et al., 1984); and

2. HSSWDS (Perrier and Gibson, 1982).

HELP and HSSWDS are very similar, and both give output on water movement through the system including percolation, drainage, evapotranspiration, runoff and soil water storage. These results are based on a variety of climatologic and soil data for each layer of soil or waste. The function of each layer is considered, as is the distance between collection piping, the slope of the drainage layer, and an anticipated percentage of leachate that leaks through the liner. Other equations that model water movement through soil and waste are available, and many can be easily adapted to a computer program.

An important consideration in drainage-layer design is the maximum height to which leachate rises in the drainage layer. Leachate tends to mound up in granular drainage layers due to viscous resistance to horizontal flow. The maximum height of this mounding must not exceed 30 cm (1 ft), as stipulated by RCRA regulations. For a particular drainage-layer configuration, drainage-layer permeability, and liquid infiltration rate, the maximum height of leachate mounding in the drainage layer can be calculated by the following formula (Moore, 1980):

$$h_{max} = \left(\frac{L^2 e}{4k}\right)^{\frac{1}{2}} \left(\frac{k\tan^2 s}{e} + 1 - \frac{k\tan s}{e}\left(\tan^2 s + \frac{e}{k}\right)^{\frac{1}{2}}\right)$$

where: h_{max} = maximum height of leachate over the liner (cm)
L = length of spacing between drainage pipes (cm)
e = quantity of leachate seeping into drainage layer (cm/sec)
k = permeability of drainage layer (cm/sec)
s = slope of liner

Figure 5 illustrates a drainage layer geometry for this formula and identifies formula variables. Given a value for e (representing infiltrating precipitation and liquid generated by the waste itself), this equation may be used to select combinations of values for L, s, and k which will maintain an h_{max} of 30 cm (1 ft) or less.

It should be noted that the above equation for h_{max} gives only an approximate value. A more rigorous, non-linear equation can be found in McBean et al. (1982). It should also be noted that the second term of the equation goes to one if the slope equals zero. This gives a simplified equation which slightly overestimates h_{max}, but which can be more easily solved.

The designer should consult additional references for a more detailed explanation of this design calculation using other drainage-layer geometries and associated design equations (EPA, 1983b; Harr, 1962; Bear, 1972).

Although EPA (1982) recommends a drainage-layer thickness of 30 cm (1 ft), thicker layers should be considered to increase drainage efficiency (EPA, 1985a). The drainage-layer design should include a safety factor to account for possible clogging because of solids infiltration or other clogging mechanisms. A safety factor can be achieved by increasing liner slope, decreasing pipe spacing, or increasing drainage-layer permeability or thickness.

3.5 COLLECTION PIPE NETWORK

The collection pipe network of a leachate collection system drains, collects and transports leachate through the drainage layer to a collection sump where it is removed for treatment or disposal. The pipes also serve as drains within the drainage layer to minimize mounding of leachate in the layer. In a cap drainage system, pipes are used to collect and transport water from the drainage layer to surface drainage facilities. Specific information on design of drainage pipes which may also be applicable to collection pipe design is given in USBR (1978).

3.5.1 Capacity

Pipes must be sized and spaced to remove liquid from the drainage layer without causing any significant back-up. In a leachate collection system, the collection pipes must be designed to carry the leachate without allowing more than 30 cm (1 ft) of leachate buildup within the drainage layer.

Many factors must be considered in designing the collection pipe network. The slope of the cell bottom and the distance between collection pipes are parameters used in the HELP Computer Model. Other factors include the flow through the pipe perforations, the slope of the pipe, the layout of the pipe network, and the maximum amount of liquid expected to be carried by the pipe.

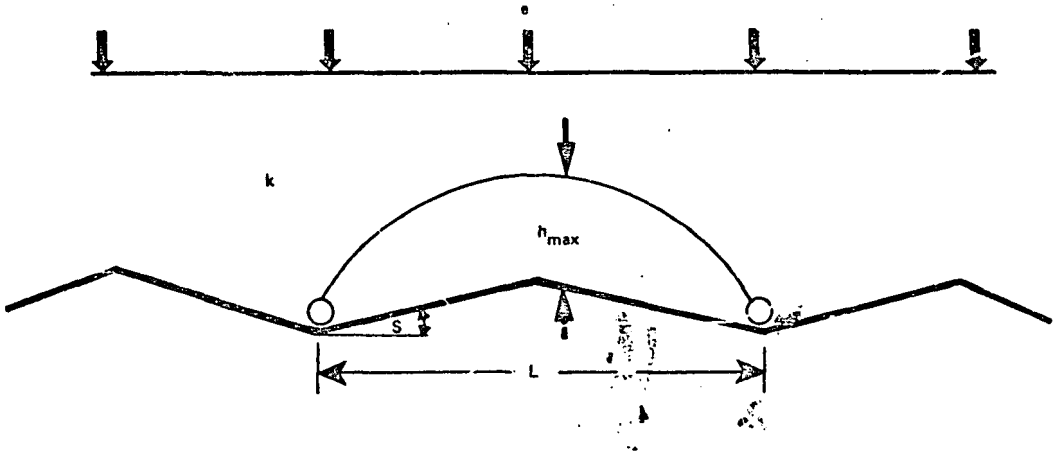

Figure 5. Landfill geometry assumed for calculating maximum height of leachate over liner.

Darcy's Formula or flow net calculations can be used to determine the design capacity of collection pipe. These techniques are discussed in detail in Cedergren (1977). Typically, based on flow considerations, 10 cm (4 in.) diameter pipe is considered adequate for drainage system laterals while 15 cm (6 in.) diameter pipe is used for collection headers in most landfill applications. Increasing the lateral pipe diameter to 15 cm (6 in.) and the collection header diameter to 20 cm (8 in.) would allow easier access for inspection and maintenance equipment, provide a greater cross-sectional area for leachate flow, and reduce blockage of leachate flow from partial clogging within the pipe.

3.5.2 Structural Stability

Pipes used to collect and convey leachate from leachate collection systems must be structurally stable to withstand the loading of the overlying filter and drainage layers, wastes, cap materials, and vehicular traffic that may move over the disposal cell. Collection pipes in landfill drainage systems may be rigid (e.g., concrete and cast iron) or flexible (e.g., plastic and fiberglass), and may be placed in trenches (Figure 6) or above-grade (i.e., positive projection, Figure 7). Since many landfills experience some uneven settling, flexible pipe with fittings designed to withstand this settlement is recommended, especially for the cap drainage system.

Factors which must be considered in determining the required structural stability of the collection pipe include, but are not limited to:

- vertical loading;
- perforations;
- deflection;
- buckling;
- compressive strength;
- backfill compaction; and
- loadings during construction.

Design equations for calculating the vertical loads acting on flexible pipe because of overlying materials are summarized in Table 13. The equations can be used to calculate the vertical loading stress acting on perforated collection pipe installed in trenches or above grade, and to calculate flexible pipe deflection. A complete explanation on the use of these equations may be found in Haxo (1983). A problem in using these equations with respect to landfill sites is that it may be difficult to determine the average unit weight of fill since dense waste (high unit weight) may be placed in a single area, rather than spread evenly over the site. The designer should include a safety factor to account for these uncertainties. The selection, for example, of the next greater standard wall thickness would provide an extra measure of protection against excessive loading on the pipe.

Most pipe standards assume flexible pipe failure at a deflection of 5 to 7.5 percent, although pipe deflected beyond this point may still conduct fluid (Personal Interview, P. Kmet). A severely deflected collection pipe may develop bottlenecks that could restrict flow. Pipe deflection depends greatly on the bedding compaction. Compaction is often difficult to achieve at a site with soft clays. Although sand and gravel are acceptable bedding materials,

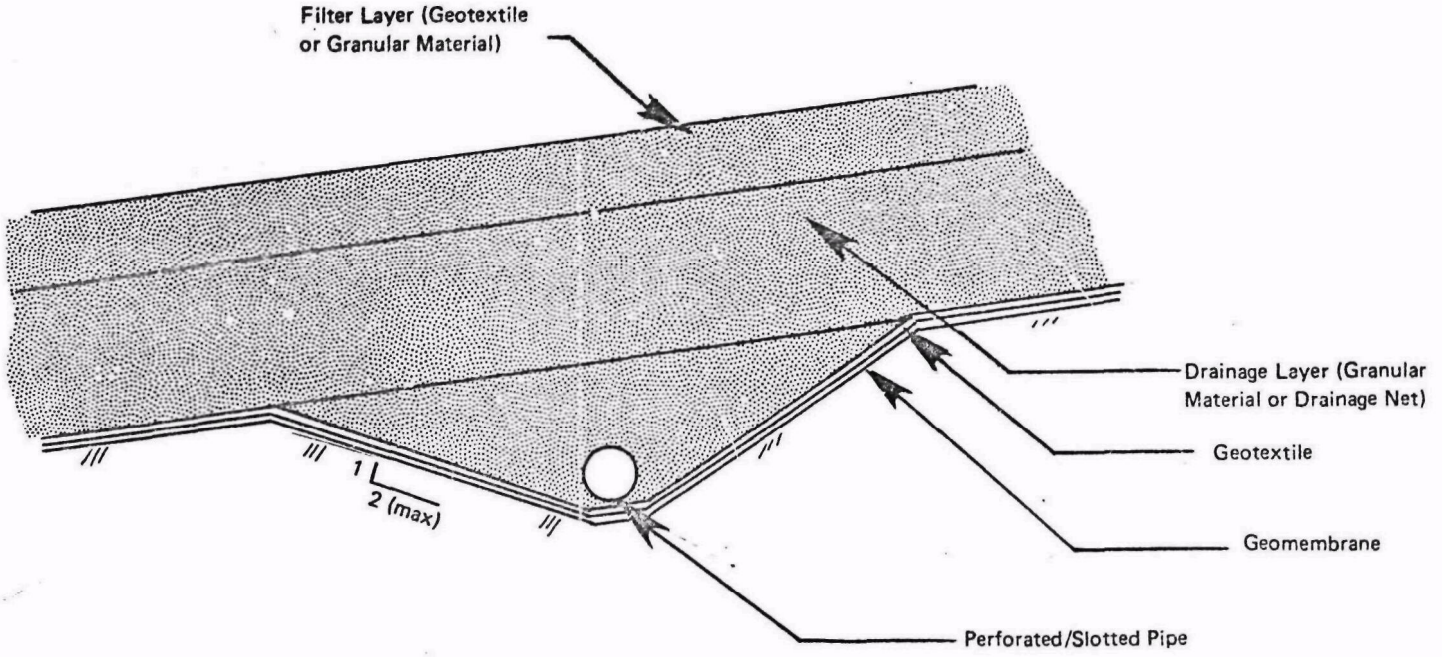

Figure 6. Collection pipe installation in trench.

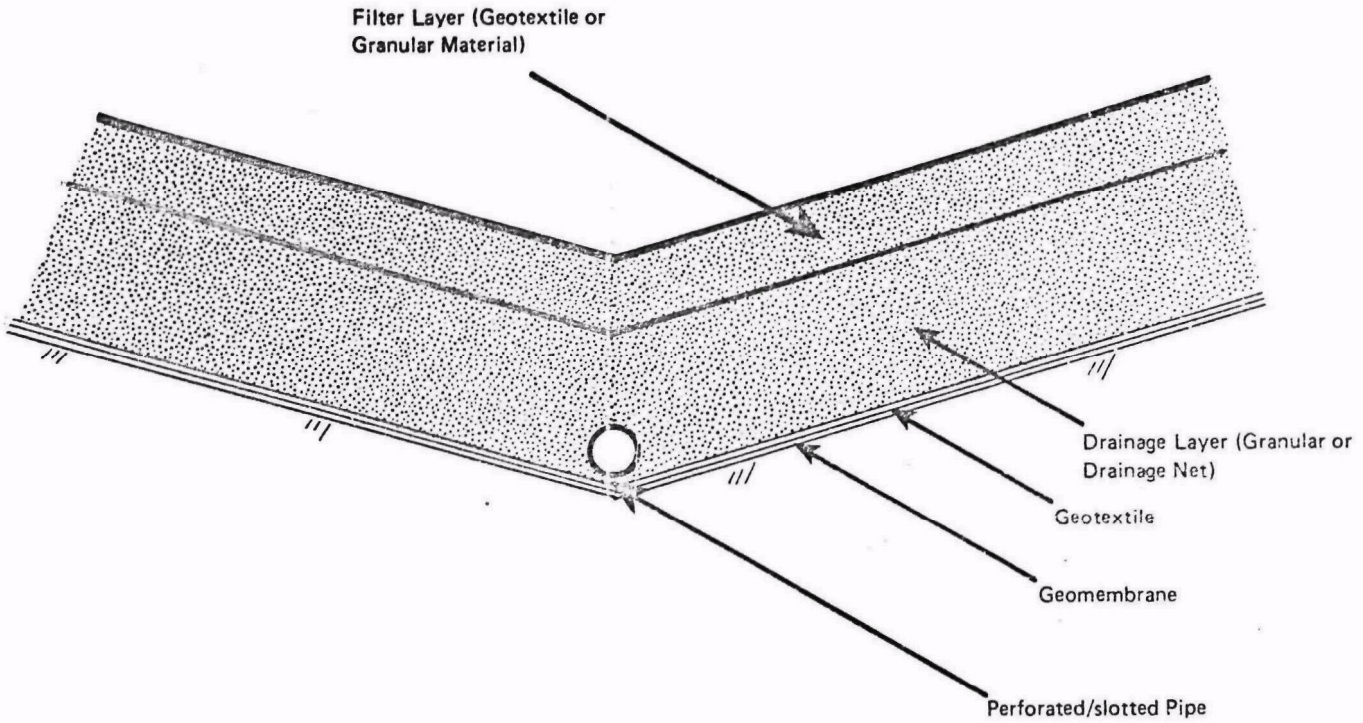

Figure 7. Collection pipe installation above liner.

TABLE 13

DESIGN EQUATIONS FOR CALCULATING VERTICLE LOADING STRESSES ON FLEXIBLE PIPE USED IN LANDFILL DRAINAGE SYSTEMS

Description	Equations
Vertical loading stress acting on pipe installed in:	
- Trench	$\sigma_v = B_d \omega C_D + q_f C_{\mu s}$
Where:	$C_D = [\frac{1-e^{-2K\mu(Z/B_d)}}{2K\mu}]$
	$C_{\mu s} = e^{-2K\mu(Z/B_d)}$
- Above Grade	$\sigma_v = (\omega_f)(H_f) + \omega Z_1$
Increased vertical stress for perforated pipe:	$(\sigma_v)_{design} = \frac{12}{12-Ip} (\sigma_v)_{actual}$
Flexible pipe deflections under vertical loading:	$\Delta y = D_e \frac{kWr^3}{EI + 0.061E^1 r^3}$

(continued)

TABLE 13 (continued)

Definitions:

σ_v = vertical pressure at the top of the pipe (psi)
B_d = width of trench (ft)
ω = unit weight of backfill (lb)
K = lateral pressure coefficient of backfill (psi)
μ = coefficient of friction between backfill and the walls
Z = height of backfill above pipe (ft)
q_f = vertical pressure at the bottom of the waste fill (psi)
H_f = height of waste fill (ft)
lp = cumulative length (in inches) of perforations per foot of pipe
Δy = horizontal and vertical deflection of the pipe (inches)
D_e = a factor, generally taken at a conservative value of 1.5, compensating for the lag or time dependent behavior of the soil pipe system
W = vertical load action on the pipe per unit of pipe length (lb/in)
r = mean radius of the pipe (inches)
E = modulus of elasticity of the pipe materials (psi)
E^1 = modulus of passive soil resistance (psi), (normally estimated to be 300 psi for soils of proper density of 65% and 700 psi for soils of proper density of at least 90%)
k = bedding constant, reflecting the support of the pipe receives from the bottom of the trench (dimensionless) (a conservative value generally taken 0.107)
I = moment of inertia of pipe wall per unit of length ($in.^4/in$); for any round pipe, $J = t^3/r$, where t is the average thickness (inches)

Source: Haxo, 1983.

crushed stone is easier to compact and offers greater strength to the pipe. Crushed stone, however, should not be placed directly over the liner. The Minimum Technology Guidance (EPA, 1985a) states that granular materials coarser than fine sand should not be in contact with the liner.

The pipe manufacturer should be consulted for information on buckling and compressive strength which are specific to each kind of pipe. The strength of plastic pipe may be reduced with age and warmer temperatures (greater than 21°C). Plasticizers may be broken down with time, reducing pipe strength. Some compounds in pipes are broken down by ultraviolet rays. This can be minimized by covering pipes during storage prior to use, covering installed pipe with a layer of soil, and protecting risers from exposure with a steel outer casing or similar device. As with all components in a leachate collection system, the collection pipe should be compatible with the leachate.

3.5.3 Perforations

Design of collection pipe must consider the size, spacing and orientation of holes or slots used to perforate the pipe. Perforations must allow free passage of leachate but prevent the migration of drainage media into the collection pipe. The size or diameter of these perforations therefore depends on media particle size and the volume of leachate that must be removed from the drainage system. For slotted pipe, Cedergen (1977) suggests:

$$\frac{D_{85} \text{ of the filter}}{\text{Slot Width}} > 1.2$$

and for pipes with circular holes:

$$\frac{D_{85} \text{ of the filter}}{\text{Hole diameter}} > 1.0$$

where D_{85} is the particle size which 85 percent of the soil particles are smaller than (on a dry-weight basis, as determined by ASTM D421 and D422).

Alternately, USBR (1977) recommends:

$$\frac{D_{85} \text{ of the filter}}{\text{Maximum pipe opening}} \geq 2$$

Cedergren (1977) concludes that all three equations represent a reasonable range over which satisfactory performance can be expected.

Spacing of perforations depends on flow as well as pipe strength considerations. The U.S. Soil Conservation Service and the U.S. Bureau of Reclamation require a minimum open area of 21 cm^2/m (1 $in.^2/ft$) for drainage pipe (Mohammad and Skaggs, 1983). The number of perforations per length of pipe affects the effective radius of the pipe used in design calculations. Use of effective radius in pipe design is discussed in Mohammad and Skaggs (1983)

and in Skaggs (1978). The number of perforations per length of pipe also affects pipe strength, as shown in Table 13. Both factors should be taken into account in the design of perforated collection pipe.

Orientation of perforations on the pipe depends on flow and clogging considerations. Mohammad and Skaggs (1983) found that orientation of the perforations did not affect the rate of flow when the pipe was full of water. However, Luthin and Haig (1972) found that the rate of flow in a pipe which was not full was greater when perforations were at the bottom of the pipe due to the increased head difference between the water level and the entry points. Since collection pipes will not always be full of liquid, these studies suggest that placing perforations near the bottom of the pipe will increase collection efficiency. This also minimizes the depth over the liner required for leachate to enter the pipe. However, placing additional perforations in the upper portion of the pipe will increase the ability of the pipe to collect leachate and will be just as effective as other perforations when the pipe is running full.

To prevent the perforations from plugging with sediment, the perforations should not be placed straight down but should be offset at an angle (eg. 30 degrees) from the straightdown position. In addition, holes should not be drilled along the pipe seam as this weakens the pipe.

3.6 FILTER LAYER

Two types of filters are typically used in engineering practice: granular filters and geotextile filters (Figure 8). Granular filters were first introduced in the 1920's (Terzaghi and Peck, 1967) and consist of a soil layer or combination of soil layers having a coarser gradation in the direction of seepage than the soil to be protected (i.e., the material above the filter layer). Geotextiles, first introduced in the 1970's (Hoare, 1982), are cloth-like sheets made of synthetic fibers and are sometimes referred to as filter fabrics or geofabrics. Geotextiles are manufactured in two varieties -- woven and non-woven. Woven geotextiles are similar to screens which have uniform sized openings whereas the non-woven variety consists of fibers placed in a random orientation. Both types can be made with high permeability relative to most soils while having an opening or mesh size sufficiently small to prevent soil particle movement.

The filter layer is used above the drainage layer in both leachate collection and cap drainage systems to trap fines and prevent waste and other solid materials from entering the drainage layer while allowing the passage of liquid. Information regarding physical characteristics of the fines and the anticipated loading rates is needed to formulate design criteria for constructing a filter that will continue to function through the design life of the drainage system. Information on the selection and sizing of the filter medium is presented in this section.

Some designers argue that a filter layer is not necessary when the quantity and loading rate of fines introduced to a drainage layer are small enough to allow infiltration into or transport through the drainage layer without adversely affecting the performance of the drainage layer. Physical characteristics of fines such as the particle size and shape may dictate

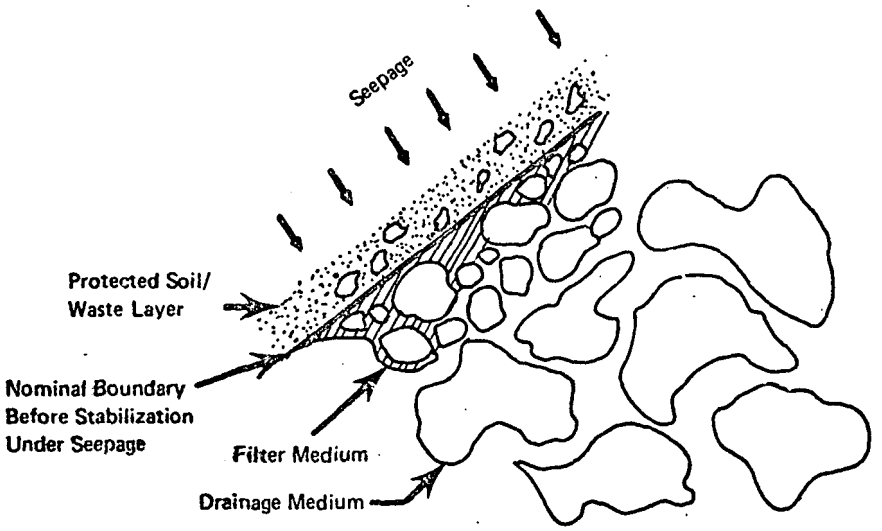

Granular Filter

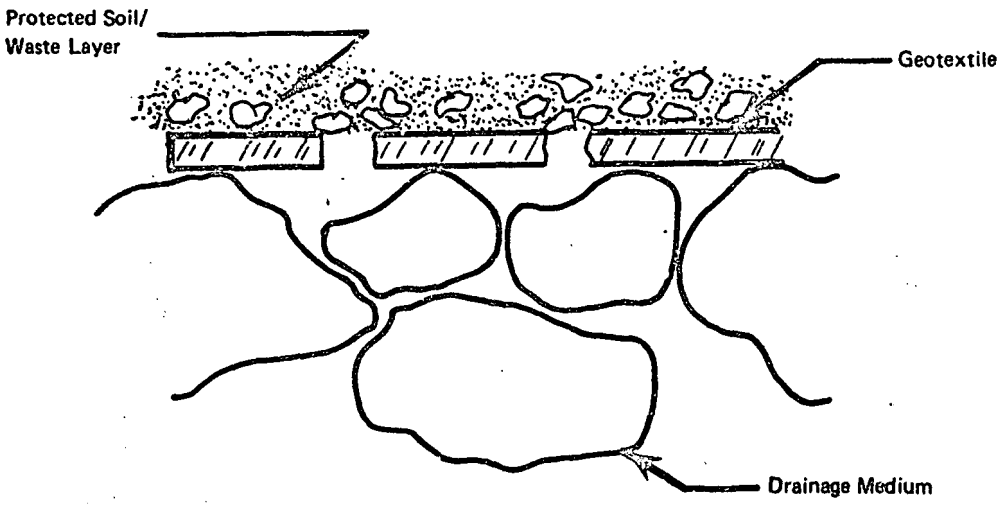

Geotextile Filter

Schematic of granular and geotextile filters.

Figure 8. Schematic of granular and geotextile filters.

whether it is practical to design a filter layer to trap fines or a drainage layer to allow transport of fines. Information on physical characteristics of the fines, such as the particle mass and density, coupled with anticipated flow velocity of liquid through the drainage system, will aid in determining whether transport of fines will be possible.

The factors that influence the decision to include a filter layer in a drainage system will also influence the decision whether or not to wrap collection piping or the pipe trench with geotextile. It is generally considered unwise to wrap a pipe since the geotextile may clog with fines. However, where it can be conclusively demonstrated that fines will not be a problem, wrapping the pipe with a compatible geotextile would be effective in preventing migration of drainage media into the pipe and may allow for larger perforations in the pipe.

The designer of a leachate collection system will need to balance the presence of fines in the deposited waste against the advantages (i.e., meeting the design goals) and the disadvantages (i.e., potential causes of sedimentation) of using a filter layer and/or wrapping collection piping or the trench the pipe is in with geotextile. Figure 9 presents design goals which need to be addressed in considering the use of a filter layer or geotextile-wrapped pipe. In most cases, a filter layer will be needed to prevent migration of overlying materials into the drainage layer. EPA (1985) recommends the use of a granular or synthetic filter layer above the drainage layer to prevent clogging.

3.6.1 Granular Filters

Various design criteria are available for granular filters (Peck et al., 1974; Cedergren, 1977; U.S. Bureau of Reclamation, 1977; U.S. Army Corp of Engineers, 1955; Canada Centre for Mineral and Energy Technology, 1977; and Sherard et al., 1984a and b). Review of these publications shows that the variations among design criteria are minimal.

Generally, filter design is based on the particle-size distribution of the overlying soils. For a leachate collection system the overlying soil would most likely be the waste, and for a cap drainage system the overlying soil would most likely be the topsoil. Particle-size distribution or gradation of soil is the relative proportion of each particle size on a dry-weight basis. Determination of a soil's gradation is defined in ASTM Specifications D421 and D422 (1982). A soil's gradation is commonly shown graphically in the form of a particle-size (or grain-size) distribution curve (Figure 10).

Peck et al. (1974) present design criteria for granular filters based on the concept of filter ratios (Table 14). Peck et al. (1974) also recommend that the particle-size curve representing the filter material should have a smooth shape without pronounced breaks and should be roughly parallel to that of the soil being protected.

Cedergren (1977) suggests the following two criteria for granular filters:

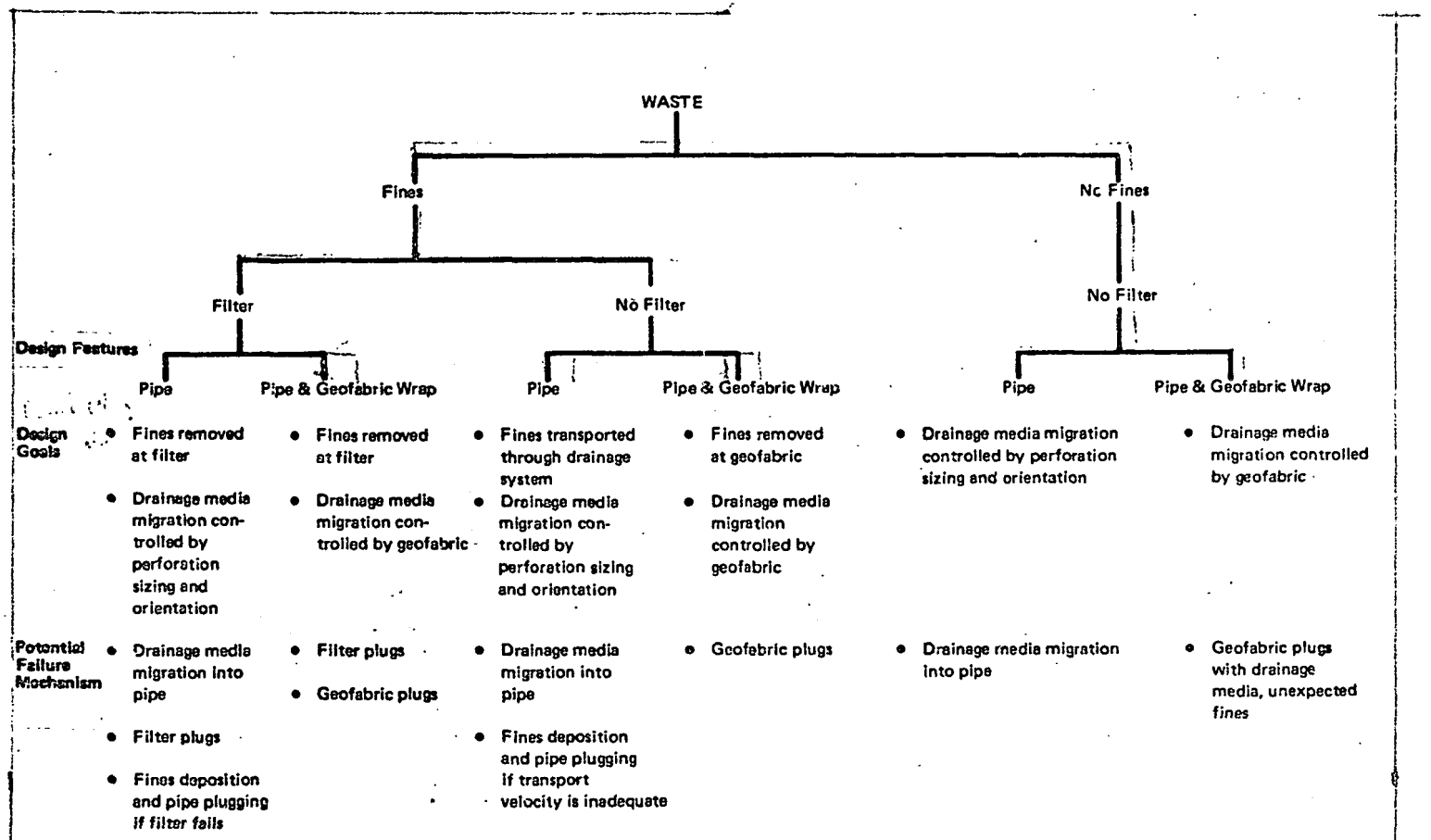

Figure 9. Potential design options for collection or transport of fines.

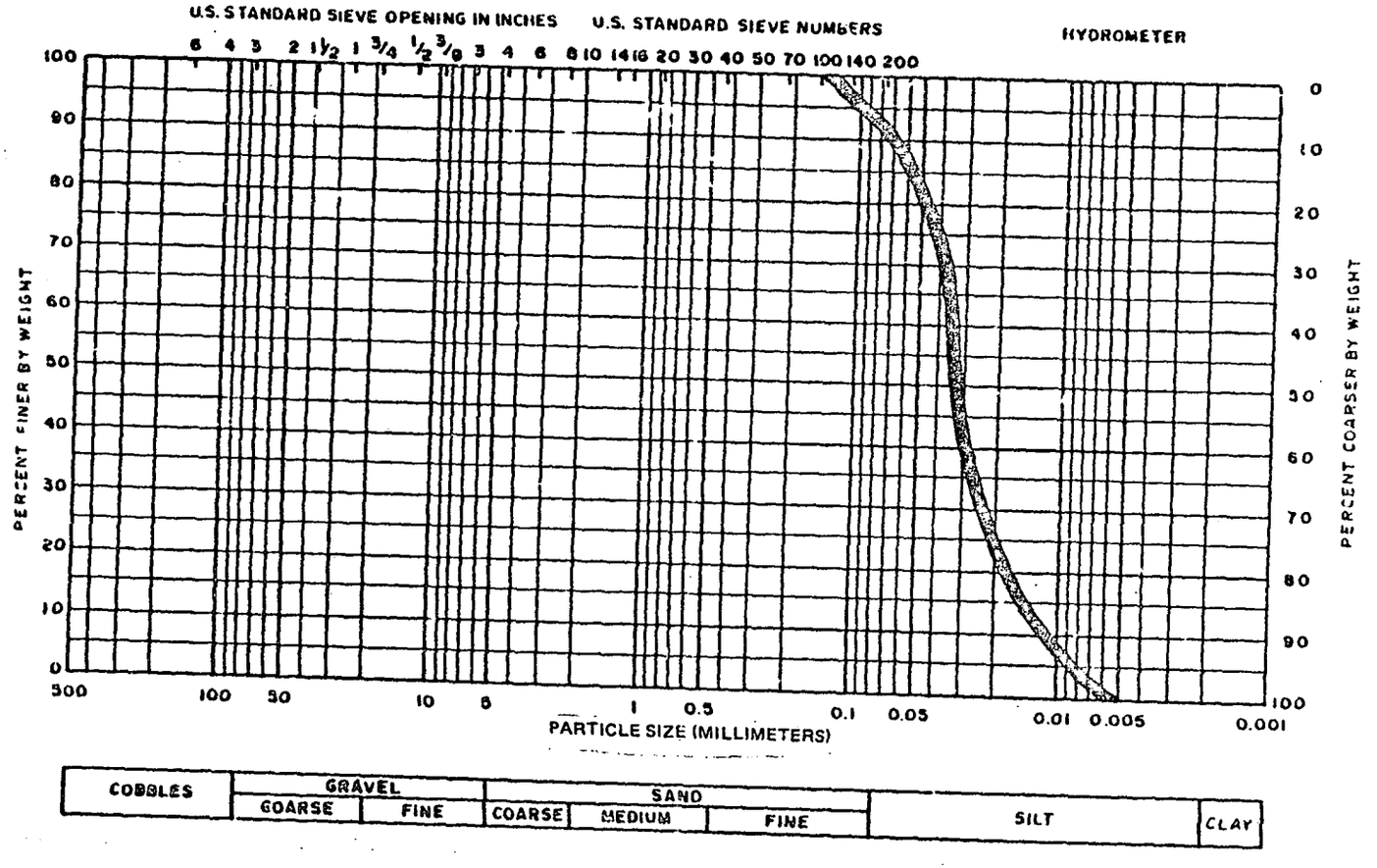

Figure 10. Particle-size (or grain-size) distribution curve.

TABLE 14

PARTICLE-SIZE REQUIREMENTS FOR FILTERS*

Grading of Filter Material	R_{50}	R_{15}
Uniform	5 to 10	No requirements
Nonuniform**, subrounded particles	12 to 58	12 to 40
Nonuniform**, angular particles	9 to 30	6 to 18

*R_n = the filter ratio for the n percent size = $\frac{D_n \text{ of Filter}}{D_n \text{ of overlying soil}}$

D_n = particle size which n percent of the soil particles are smaller than (on a dry-weight basis, as determined by ASTM D421 and D422).

**The filter material is considered nonuniform if D_{60}/D_{10} (coefficient of uniformity) is greater than 4.

Source: Peck *et al.*, 1974

Criterion 1:

$$\frac{D_{15} \text{ of the filter}}{D_{85} \text{ of the overlying soil}} < 4 \text{ to } 5$$

Criterion 2:

$$\frac{D_{15} \text{ of the filter}}{D_{15} \text{ of the overlying soil}} > 4 \text{ to } 5$$

where D_n is defined in Table 14.

The first criterion is intended to prevent migration of overlying soils into the filter layer, and the second to allow sufficient hydraulic conductivity to prevent buildup of liquid above the filter.

Where the particle-size difference between the overlying soil and the underlying soil is great, a single filter layer which meets the design criteria may not be possible. In this case, several filter layers may be necessary (e.g., the "overlying soil" for one filter layer may be a second filter layer). In addition, the above criteria must be satisfied between the drainage layer and the filter layer to prevent migration of filter soils into the drainage layer and to ensure sufficient hydraulic conductivity between the two layers.

3.6.2 Geotextile Filters

Filter design criteria are not as well established for geotextiles as they are for granular materials. This is mainly due to the short time geotextiles have been available for engineering use. Discussions of design criteria for geotextiles are presented in publications by Cedergren (1977), Koerner and Welsh (1980), Chen *et al*. (1981), Giroud (1982), Lawson (1982), Carrol (1983) and Horz (1984).

Chen *et al*. (1981) suggest the following criteria:

Criterion 1:

$$\frac{P_{95} \text{ of the geotextile}}{D_{85} \text{ of the overlying soil}} \leq 2$$

Criterion 2:

$$\frac{P_{95} \text{ of the geotextile}}{D_{15} \text{ of the overlying soil}} \geq 2$$

where: P_{95} = pore diameter of the geotextile which 95% of the pores are smaller than (also called the equivalent opening size or EOS)

D_n is defined in Table 14.

The first criterion is intended to prevent overlying soils from passing through the filter, and the second to prevent clogging of the geotextile with fines. Procedures for determining P_{95} are found in Carrol (1983..

In addition, Carrol (1983) recommends that the hydraulic conductivity of the geotextile be greater than ten times the hydraulic conductivity of the overlying soil, and that the gradient ratio be less than or equal to 3. The gradient ratio is a laboratory parameter determined by comparing head losses across the geotextile and the immediately adjacent protected soil to head losses across the undisturbed protected soil. Procedures for determining the hydraulic conductivity of a geotextile can be found in Celanese Fibers Marketing Company (1981). Procedures for determining the gradient ratio for a geotextile are presented by Haliburton and Wood (1982).

Giroud (1982) provides a critique of conventional geotextile filter criteria, claiming they are overly restrictive. He suggests alternative criteria based on a theoretical analysis of the governing equations.

3.7 OTHER COMPONENTS

3.7.1 Sumps

Collection pipes typically convey the leachate by gravity to one or more sumps depending upon the size of the area drained. Leachate collected in the sump is removed by pumping directly to a vehicle, to a holding facility for subsequent vehicle pickup, or to an on-site treatment facility.

Sump dimensions are governed by the amount of leachate to be stored, pump capacity and minimum pump drawdown. Two possible sump designs are given in Figure 11. Manholes may also be used as sumps (see Section 3.7.4).

The volume of the sump must be sufficient to hold the maximum amount of leachate anticipated between pump cycles, plus an additional volume equal to the minimum pump drawdown volume (i.e., liquid reservoir to keep pump from running dry). Sump size should also consider dimensional requirements for conducting maintenance and inspection activities, including equipment and personnel access. Sump pumps may operate with preset cycling times (e.g., 15 minutes) or, if leachate flow is less predictable, the pumps may be automatically switched on when leachate reaches a certain level. The Minimum Technology Guidance (EPA, 1985a) states that sumps should have the capability of continuous and automatic operation. This avoids the problem of leachate buildup when an operator fails to activate the pump when the sump is full. This problem was noted in the interview results in Section 2.

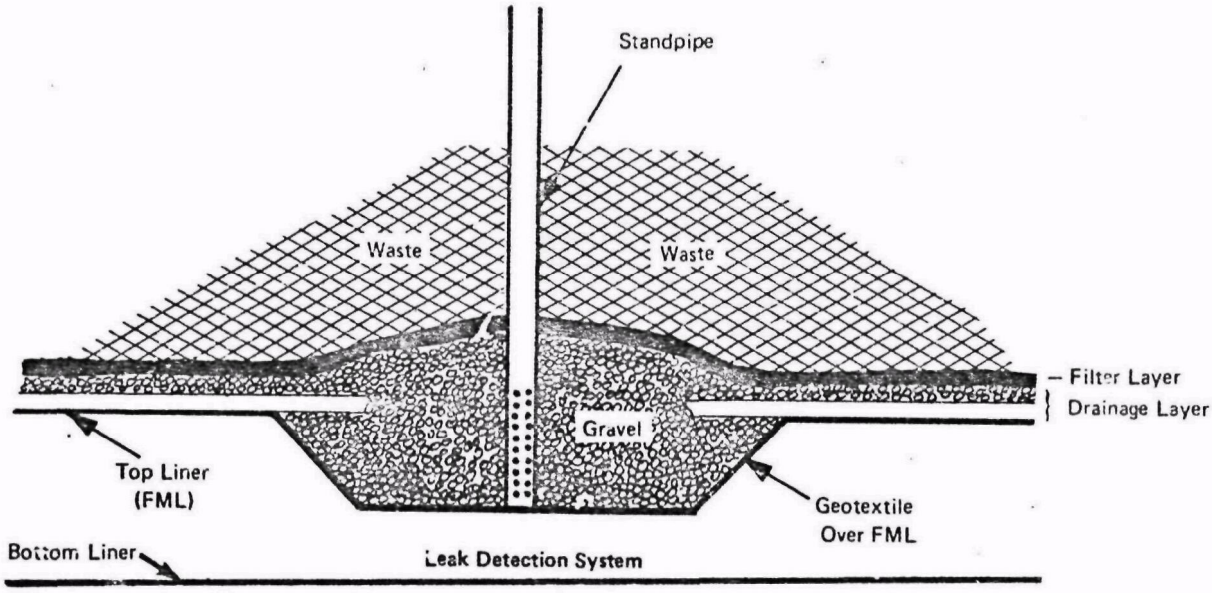

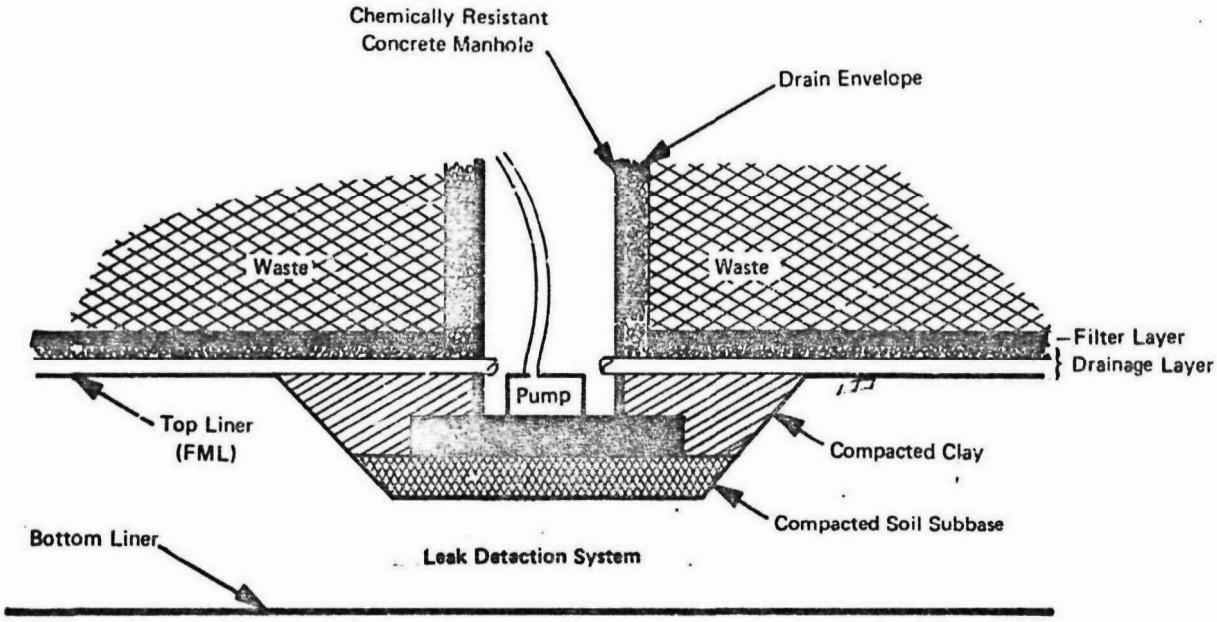

Figure 11. Typical sump designs.

3.7.2 Pumps

Sump pumps should be designed to provide adequate head and volume to discharge leachate from the collection sump to either a collection vehicle or holding facility. Sizing pumps for pumping capacity greater than the anticipated design capacity will ensure that unpredicted surges in leachate flow may be accommodated without causing a buildup in leachate within the facility. Where multiple pumps are used, it may be advantageous to size pumps for a capacity equal to the total flow rate of the leachate collection. In the event that one or more pumps fail to operate, the remaining pump(s) could accommodate the increased load.

When the pump is discharging directly to a collection vehicle, the pump capacity should be large enough to empty the sump contents in an efficient manner. An alternative to pumping directly from the sump is to use a diaphragm pump or vacuum pump system mounted directly on the collection vehicle, much like septic tank scavenger vehicles. These vehicles typically hold several thousand gallons.

Pump types which may be used to pump leachate include submersible, centrifugal-type pumps, which offer economical capital and operating costs. Shaft-driven centrifugal pumps are also applicable in leachate pumping because the motors are mounted above the sump and out of the liquid. End suction centrifugal pumps may be used if suction lifts are limited to 4.5 m (15 ft). Diaphragm pumps are not recommended because of high maintenance and low reliability resulting from loss of prime.

In cold weather climates, provisions may be needed to heat enclosures for exposed pumps and motors. Pump controls for pumps that discharge to collection vehicles should be equipped with a lockable on-off switch. A low-level float may be used to turn off the pump to prevent motor overheating or loss of prime.

Pumps discharging to holding tanks or surface impoundments should include float or liquid-level control devices to perform the following functions.

- low-level cutoff;
- pump start;
- high-water alarm in storage tank and sump; and
- second pump start if two pumps are used.

3.7.3 Discharge Lines

The discharge lines should feed through a valve pit that contains a suitable valve (gate, butterfly or ball type). A check valve should also be installed after the main control valve to prevent back-siphonage. The volume of leachate should be monitored by inserting a flow meter into the discharge line and recording the amount pumped and visually indicating the rate of flow. The flow meter and recorder can also be placed in the valve pit. The meter may be a differential head type consisting of a venturi tube, a magnetic meter, or a Doppler meter. A flow totalizer may also be installed to document system operation.

3.7.4 Manholes

Manholes may be placed at the junction of leachate collection pipes to allow access to the collection system for inspection and maintenance. They should be placed within the containment area so the leachate collection pipe does not penetrate the liner. Manholes should be designed to minimize stresses on the liner and to maintain structural integrity over the lifetime of the facility.

Manholes normally are fabricated concrete structures. The normal entrance should be at least 60 cm (24 in.) in diameter to allow for personnel and equipment entry. Larger diameter openings may be necessary to accommodate bulky inspection equipment, or workers using self-contained air supplies. The manhole should be 1.2 m (4 ft) in diameter with an eccentric conical section to make the transition to the diameter of the entrance section. The channel of the manhole should be shaped with a channel of the same diameter as the entering pipe with the channel depth equal to the pipe radius. This channel should be lined with appropriate material to prevent deterioration. A wide base should be used to increase stability and minimize stresses on the liner. In addition, pipe couplings to manholes should be made with flexible, chemically-resistant boots.

3.7.5 Liquid-Level Monitors

Liquid-level monitoring provides information on the level of the leachate at selected points within the site. Level monitoring coupled with high level alarms will ensure that leachate levels above the liner will not exceed 30 cm (1 ft) or that leachate in storage tanks will not overflow before being transported to a treatment facility. Liquid-level monitoring devices are discussed in Section 5.2.2.

4.0 CONSTRUCTION

4.1 INTRODUCTION

Following the design of a leachate collection or cap drainage system, construction documents are prepared. These documents provide the necessary information in the form of graphical plans, specifications and a construction quality assurance plan to describe and control construction of the system. The construction documents also include estimated costs to construct the system and provide quality assurance. These documents may also address the prevention of drainage system failure during and after the construction phase. The term "drainage system" is used to refer to both leachate collection and cap drainage systems.

4.2 PLANS AND SPECIFICATIONS

Plans are working drawings which describe in graphic form the dimensions, location, size, arrangement, layout, and spatial relationships of the drainage system to be installed. Specifications are written documents that specify the amount, type and quality of materials required, details of work to be performed, quality control requirements, and construction schedules.

4.2.1 Detail

The detail contained in the plans and specifications should be complete enough to provide a high degree of confidence that the constructed drainage system will perform as designed. Recommended methods of component installation, aimed at preventing failure of the drainage system, should be clearly presented in graphic and written form. Particular attention should be given to ensure that dimensions are correct and consistent, and that step-by-step written procedures for installation of components are concise, accurate, and follow a logical sequence. For example, plans and specifications for collection pipes should contain detailed drawings and written descriptions of:

- placement of bedding material around pipes;
- spacing, size, and circumferential location of holes or slots in collection laterals;
- orientation of collection laterals with respect to grade, and orientation of holes or slots; and
- joining of pipe sections and alignment of pipe to manholes.

Strict adherence to detail contained in the plans and specifications will help ensure that the installed drainage system will function as designed according to the criteria established to prevent failure.

The contract drawings should contain details of all components of the project such as:

- typical sections of the liner, filter layer, and drainage layer;
- collection pipe trenches;
- manholes and sumps; and
- specific details for variances from these typical sections.

4.2.2 Specific Plans

Plans and specifications should include a layout of the existing facility or site, a geometric plan of drainage system components, and a grading plan.

A layout of the site should be prepared showing, at a minimum, the following details:

- location of all physical features within the proposed limit of work;
- survey baseline;
- all utility locations and elevations;
- north arrow;
- graphic scale;
- contours of drainage system layers; and
- horizontal and vertical orientation and type and quantity of all drainage system components.

A geometric plan should show elevation and location of all major components of the project such as excavation limit, the horizontal and vertical limits of the filter and drainage layers, liner, utilities, and leachate removal structures. The plan should also show orientation of the collection pipe network including spacing between laterals, and vertical and horizontal positioning of the pipe within the drainage layer and with respect to established baselines and benchmarks. Before construction starts, installation location data given on the plans should be verified to determine whether the control points are as stated and undisturbed. This verification will determine whether these points can be maintained during construction. If not, the plans and specifications should provide for alternative working baselines and benchmarks. The essential element is to establish points that are sure to remain undisturbed or that can be replaced from secure reference points.

The grading plan is a graphic representation of the finished elevation of the various components of the work relative to the existing conditions. The grading plan should contain enough data to allow the contractor to compute the cut-and-fill requirements of the project, and establish heights of surface-water-control structures needed. Of primary importance is the illustration of run-on and runoff control structures and conformance with locations for surface-water interception or control facilities.

4.2.3 Phased Development

For landfills, common practice is to deposit wastes in functional units called cells. Each cell is sized to handle an estimated volume of waste within a specified time frame. Typically, cells are constructed to final dimensions even though the cell may be filled with waste over a period of time. During the active life of the cell, the filter and drainage layers (including the collection pipe) not covered by wastes will be exposed and subject to potential damage. Climatic events such as rain storms may cause serious erosion of the filter and drainage layers and result in loss of structural integrity. High ambient air temperatures may cause thermal expansion of plastic collection-pipe within the drainage layer that permanently displaces the pipe and breaks pipe joints. Photo-oxidation of plastic materials may cause embrittlement or failure of components such as geotextiles and pipes.

Phased development of individual disposal cells is an alternative construction technique to alleviate the problems mentioned above. Using this approach, only that area of the cell which would soon be covered with wastes is constructed. This minimizes the time these components are subject to potential damage from exposure. However, wastes should not be placed in the cell until all components are installed and certified as functional.

Another alternative would be to construct the entire cell but cover unutilized portions with a temporary synthetic or natural (i.e., soil) protective cover. A disadvantage of this alternative is the potential difficulties in applying and removing the temporary cover without damaging the underlying drainage-system components.

The plans and specifications should consider operational procedures and schedules to reduce the potential for these factors to clog and affect drainage-system performance.

4.2.4 Material

The quantity, size, type and quality of all construction materials must be identified in the plans and specifications. Reference to established material specifications such as state highway specifications for soils, the National Sanitation Foundation or American Water Works Association for pipe and fittings and the Underwriters Laboratory for electrical equipment are appropriate. Additional specification of the quality of material may be required, particularly for drainage-system components that require special materials or where chemical resistance of construction materials is important in preventing failure.

Material specifications should also identify how drainage-system components will be placed or joined together. For example, the method for connecting multiple lengths of perforated pipe should be specified, as should the connection of collection pipe to manholes. Compaction requirements of soil or granular components should also be specified.

Material specifications should include all installed pumping, monitoring, inspection and maintenance equipment. Sizes of materials and equipment should be checked to verify that specifications for different materials are compatible with each other. Specifications of materials should also include climatic conditions that will influence proper placement. For example, the placement of plastic materials in extremely cold temperatures may cause cracking or other thermal defects. Curing of concrete or special coatings may require a minimum temperature to assure proper performance.

All materials used in the construction of the drainage system should be verified for conformance to design criteria as specified in the plans and specifications. This verification should be performed in accordance with the Construction Quality Assurance (CQA) plan discussed in detail in Section 4.3.

4.2.5 Installation Procedures

4.2.5.1 Drainage Layer and Collection Pipe

Plans and specifications for the installation of the drainage layer (including collection pipe) should provide detailed information concerning material placement, construction sequence, phased or staged construction, and testing and inspection.

The drainage-layer material should be placed using equipment and techniques that accomplish the task without damaging the materials or the structural integrity of the finished drainage layer or the underlying liner. Materials used in the construction of the drainage layer include the drainage medium, collection pipe, bedding material for the pipe, and geotextile for wrapping the bedding material (when used). Granular material should be washed prior to placement to eliminate fines and should be placed directly on top of the liner system in a manner that avoids dumping of materials or operation of equipment directly on the liner. Equipment used to place aggregate material should operate only on the placed granular material and should be compatible with the selected allowable design loads on the liner system. A small front-end loader generically referred to as a "Bobcat" may be a suitable piece of equipment to place granular material even though its daily output might be substantially lower than that of a heavy-duty front-end loader. All construction equipment, including Bobcats, should avoid sharp turns that may create tearing or shearing stresses in the liner.

Procedures for testing and inspection of the drainage layer should be detailed in the plans and specifications and performed in accordance with the construction quality assurance (CQA) plan discussed in Section 4.3. Specific items which should be addressed include:

- grade (slopes) of finished drainage layer;
- drainage-layer thickness;
- correct horizontal and vertical alignment of collection pipe;
- correct orientation, size and spacing of slots or holes in collection pipe;
- proper construction of pipe section joints;
- construction sequence; and
- control of fines during construction.

4.2.5.2 Filter Layer

Plans and specifications for the installation of the filter layer should provide detailed information on material placement, and on testing and inspection procedures.

The filter-layer will consist of either a specified granular or geotextile material. Granular filter-layer material should be placed with care to minimize potential damage to the underlying drainage layer. Equipment should be selected to minimize vertical loadings and care should be taken during equipment operation to avoid quick turns (causing ruts which could damage the underlying drainage layer). The granular material should be spread uniformly to grade and depth in accordance with the plans and specifications. A geotextile filter fabric should be placed with care to avoid ripping or puncturing the fabric. Adjacent runs of fabric should overlap as specified in manufacturer's recommendations to prevent short-circuiting of leachate.

The installed filter layer should be tested and inspected in accordance with the CQA plan discussed in Section 4.3. Specific items which should be addressed include:

- final grade slope;
- thickness;
- particle-size analysis (or geotextile properties); and
- hydraulic conductivity.

4.2.5.3 Other Components

Installation procedures for manholes and sumps detailed in the plans and specifications should address procedures for verification of vertical and horizontal positioning of manholes and their foundations. Proper orientation of the manholes is important with respect to collection-pipe connections. Flexible joints should be used to connect manholes and collection pipes.

Manhole installation procedures should also include details on access doors, interior steps or ladders, ventilation ports and locking devices to limit access to the manhole. Installation of monitoring equipment installed in the manholes, such as flow meters or level alarms, should also be detailed in the plans and specifications.

In some instances, it may be necessary to apply chemically-resistant and leak-proofing coatings to manholes or sumps in the field. Details of application procedures and coating thicknesses should be provided in the plans and specifications.

The installation details of pumps and discharge piping should address locations and should reference appropriate benchmarks for the piping and, in the case of pumps, any special installation and testing cited by the manufacturer.

The removal system should be tested and inspected in accordance with the CQA plan and should focus on the following items:

- testing for alignment of manholes and collection headers;
- inspecting integrity and thickness of any coatings; and
- inspecting and circuit testing all electrical connections, control devices, and monitoring and pumping equipment.

4.3 CONSTRUCTION QUALITY ASSURANCE PLAN

Construction quality assurance (CQA) for a leachate collection and cap drainage system is needed to assure, with a reasonable degree of certainty, that the completed system meets or exceeds the specified design. This involves monitoring and documenting the quality of materials used and the conditions and manner of their placement. CQA serves to detect variations from design, whether as a result of error or negligence on the part of the construction contractor, and to provide for suitable corrective measure before wastes are accepted at the facility. Without proper CQA, problems with the leachate collection or cap drainage system that are due to construction may not be discovered until the system fails during operation.

4.3.1 Elements of a CQA Plan

The Construction Quality Assurance Plan is the written document describing the specific approach to be followed in attaining and maintaining consistently high quality in the construction of a hazardous waste disposal facility so that the completed facility meets or exceeds the specified design. While the overall content of the CQA plan will depend on the site-specific nature of the proposed facility, specific elements that should be included in the plan are (EPA, 1985b):

- Responsibility and Authority--The responsibility and authority of all organizations and key personnel involved in permitting,

designing, and constructing the hazardous waste land disposal facility should be described fully in the CQA plan.

- CQA Personnel Qualifications--The qualifications of the CQA officer and supporting inspection personnel should be presented in the CQA plan to demonstrate that they possess the training and experience necessary to fulfill their identified responsibilities.

- Inspection Activities--The observations and tests that will be used to monitor the installation of the leachate collection system should be summarized in the CQA plan.

- Sampling Requirements--The sampling activities, sample size, sample locations, frequency of testing, acceptance and rejection criteria, and plans for implementing corrective measures as addressed in the project specifications should be presented in the CQA plan.

- Documentation--Reporting requirements for CQA activities should be described in detail in the CQA plan. This should include such items as daily summary repots, inspection data sheets, problem identification and corrective measures reports, block evaluation reports, design acceptance reports, and final documentation. Provisions for the final storage of all records also should be presented in the CQA plan.

Each of these elements is described in detail in EPA (1985b). In addition, inspection activities for leachate collection systems are discussed below.

4.3.2 Inspection Activities

Observations and tests are performed by CQA inspectors to verify that the materials and procedures used during construction are in conformance with the plans and specifications. Observation and testing is conducted throughout the construction process, beginning with the materials selected for use and continuing through verification that the entire system has been constructed as designed.

4.3.2.1 Types of Testing

The three types of testing generally used by CQA inspectors are:

- visual inspection (observation);

- non-destructive testing; and

- destructive testing.

Visual inspection is used to evaluate and document the overall quality of materials and procedures used during construction, including:

- construction materials (storage conditions, conformance with specifications, material quality, defects);

- installation procedures (overall quality, methods used);
- work conditions (temperature, precipitation, wind);
- personnel and equipment utilization (vehicle routing, crew assignments); and
- construction sequence.

Experience and training of the inspector are particularly important in controlling quality by visual inspection.

Non-destructive testing is used to evaluate installed components of the drainage system. It has the advantage that the component being tested is not damaged by the test. Non-destructive testing is used to verify dimensional, physical or mechanical characteristics to locate defects. Tests to determine dimensional, physical and mechanical characteristics may include permeability analysis of soil layers, or physical measurement of elevation, grade or location of placement of system components. Defects may be located by methods such as cleaning out lengths of collection pipe to verify continuity of the pipe network (see Section 5).

Destructive testing often involves preparation of specimens taken from the installed component which are tested to either partial or complete destruction. Destructive testing is often performed to determine the tensile, compressive or ultimate strength of installed materials, and usually requires repair or replacement of a portion of the component from which the specimen was taken.

4.3.2.2 Test Methods

Testing performed as part of a CQA program should be conducted in accordance with standard procedures. Applicable procedures that are well-established and generally accepted by professional consensus should be selected. Typical sources of consensus standards include the American Society of Testing and Materials (ASTM), the American Association for State Highway and Transportation Officials (AASHTO), and the American Water Works Association (AWWA). Non-standard test procedures should be avoided. When non-standard procedures are used, they should be described in detail to assure consistent application of measurement throughout the CQA program. Commonly used testing procedures that are applicable for drainage system quality assurance are listed in Table 15.

TABLE 15

CQA TEST PROCEDURES

Component	Factors to be Inspected	Inspection Methods	Test Method Reference
Granular drainage and filter layers	Thickness	Surveying; measurement	NA
	Coverage	Observation	NA
	Soil type	Visual-manual procedure	ASTM D2488-84
		Particle-size analysis	ASTM D422-63
		Soil classification	ASTM D2487-83
	Density	Nuclear methods	ASTM D2922-81
		Sand cone	ASTM D1556-82
		Rubber balloon	ASTM D2167-84
	Permeability (laboratory)	Constant head	ASTM D2434-38
Synthetic drainage and filter layers	Material type*	Manufacturer's certification	NA
	Handling and storage	Observation	NA
	Coverage	Observation	NA
	Overlap	Observation	NA
	Temporary anchoring	Observation	NA
	Folds and wrinkles	Observation	NA
	Geotextile properties	Tensile strength	Horz (1984)
		Puncture or burst resistance	Horz (1984)
		Tear resistance	Horz (1984)
		Flexibility	Horz (1984)
		Outdoor weatherability	Horz (1984)

(continued)

TABLE 15 (continued)

Component	Factors to be Inspected	Inspection Methods	Test Method Reference
		Short-term chemical resistance	Horz (1984)
		Fabric permeability	Horz (1984)
		Percent open area	Horz (1984)
Pipes	Material type	Manufacturer's certification	NA
	Handling and storage	Observation	NA
	Location	Surveying	NA
	Layout	Surveying	NA
	Orientation of perforations	Observation	NA
	Jointing		
	• Solid pressure pipe	Hydrostatic pressure test	Section 4, AWWA C600-82
	• Perforated pipe	Observation	NA
Cast-in-place concrete structures	Sampling	Sampling fresh concrete	ASTM C172
	Consistency	Slump of portland cement concrete	ASTM C143
	Compressive strength	Making, curing, and testing concrete specimens	ASTM C31
	Air content	Pressure method	ASTM C231
	Unit weight, yield, and air content	Gravimetric method	ASTM C138

(continued)

TABLE 15 (continued)

Component	Factors to be Inspected	Inspection Methods	Test Method Reference
	Form work inspection	Observation	NA
Electrical and mechanical equipment	Equipment type	Manufacturer's certification	NA
	Material type	Manufacturer's certification	NA
	Operation	As per manufacturer's instruction	NA
	Electrical connections	As per manufacturer's instruction	NA
	Insulation	As per manufacturer's instruction	NA
	Grounding	As per manufacturer's certification	NA

Source: EPA, 1985b.

5.0 INSPECTION

5.1 INTRODUCTION

Leachate collection and cap drainage systems must be inspected to ensure that the constructed system continues to operate according to design specifications. Undetected failure of drainage-system components can lead to buildup of excess liquid over the liner, liner failure, and/or contamination of groundwater. Inspections serve to discover failed components of the system as well as to determine where failure mechanisms are active. In addition, inspection of the drainage system can be useful in discovering problems with other components of the disposal facility, especially the liner. Reduced outflow from the drainage system, for example, may indicate a variety of problems with the drainage system or a leaky liner.

Federal regulations under the Resource Conservation and Recovery Act require the leachate collection systems to be inspected. While in operation, a landfill, for example, "must be inspected weekly and after storms to detect evidence of the presence of leachate in and proper functioning of leachate collection and removal systems, where present" (40 CFR 264.303(b)). The Minimum Technology Guidance (EPA, 1985a) also recommends that records be kept "to provide sufficient information that the primary leachate collection system is functional and operated properly" and that "the amount of leachate collected be recorded in the facility operating record for each unit on a weekly basis." A plan for inspecting the leachate collection system should be included in a Part B permit application as part of the overall Facility Inspection Plan under 40 CFR 270.14(b)(5).

There are no similar Federal requirements for inspection of cap drainage systems at closed facilities, although the "integrity and effectiveness of the final cover" must be maintained (40 CFR 264.117). This implies the need for inspection to make sure that the cap drainage system is functioning as intended.

State regulatory agencies may make requirements for inspecting leachate collection or cap drainage systems in addition to the Federal requirements. Requirements vary from state to state, and often from facility to facility within a state. The Wisconsin Department of Natural Resources (WIDNR), for example, does not have a standard set of requirements for the inspection of leachate collection systems. Typical requirements, based on WIDNR permit approvals and conversations with WIDNR staff (Personal Interview, P. Kmet), include:

- cleaning the collection pipe after construction and after the first lift of waste is placed to verify continuity of the lines (conducted with Department representative present);
- field-checking collection pipe for clogging at least annually;

- daily recording of leachate levels in leachate collection tanks;
- quarterly recording of levels in leachate-level wells installed at site closure.

Inspections required at the Federal and state levels are intended to provide enough information to the regulatory agencies to ensure that the leachate collection or cap drainage system is performing adequately. They also provide the owner/operator with performance data. Guidance on how to conduct the required inspections, however, is generally not given; it is left up to the facility owner to specify in the permit application how the requirements will be met. This section presents information on inspection procedures which can be used to meet state or Federal regulations or the requirements of the facility owner.

Two types of inspection procedures may be used. The first, Regular or Periodic Inspections, includes visual inspection, monitoring leachate level over the liner, indicators of system failure or clogging, and direct inspection methods. The second section, Special Inspections, includes cleaning to verify the continuity of system after construction and after the first lift of waste is placed, and methods to locate and diagnose leachate collection system problems. A summary of the inspection methods addressed is given in Table 16.

Inspection can most easily be accomplished by using a checklist which summarizes the inspection protocol and provides an example record. Example checklists provided herein can be used as a reference while the procedure is conducted or as a guide in making data sheets to record test results for a specific facility.

5.2 REGULAR OR PERIODIC INSPECTIONS

Regular (weekly and after storm) inspections may include visual inspection, monitoring the leachate level over the liner, correlating amount of precipitation and site parameters with leachate quantity and correlating leachate quality with clogging indicators. The regulations do not specify the type of inspection which must be performed weekly and after storms, so selection of the appropriate methods is left up to the owner/operator (with the approval of the permitting agency).

Periodic inspections may include procedures which are conducted on a monthly, quarterly or yearly basis. These longer frequency inspections may be required by the state or performed as part of the facility owner or operator's own inspection and maintenance plan. These inspections are more involved and more costly than the methods used on a weekly basis, but provide a direct evaluation of the condition of the drainage system. Methods include television and photographic inspection and maintenance related techniques such as checking system continuity by passing sewer-cleaning equipment through the collection lines.

The first four inspection procedures discussed below (visual, leachate level, leachate quantity, leachate quality) provide primarily indirect

TABLE 16

SUMMARY OF INSPECTION METHODS

Method	Recommended Frequency	Purpose	Comments
Visual	weekly and after storms	verify presence of leachate in and proper functioning of leachate collection system	required by RCRA; does not determine cause of problem; not useful for prevention
Leachate Level Measurement	quarterly or when problems suspected	locate areas where leachate level over liner is greater than one foot	can locate general area of problem but does not determine cause
Leachate Quantity Analysis	quarterly	evaluate overall performance of system in removing leachate from over liner	does not determine cause of problem; should be verified by other techniques
Leachate Quality Analysis	as needed	evaluate potential for failure mechanisms to occur	additional research needed to determine usefulness of this method
Television and Photographic	annually	observe condition of pipe network, determine cause and location of problem	requires adequate access to pipe network
Maintenance Related	annually, after construction, after placement of first lift of waste	verify continuity of pipe network, determine cause and location of problem	requires adequate access to pipe network
Excavation	as needed	determine cause of problem	used when problem is already located; used in conjunction with repair - See Section 7

evidence of clogging or system failure. Problems are discovered by analyzing leachate characteristics and flow through the system. Direct inspection methods (television and photographic, inspection during pipe maintenance) find the problem itself (e.g., a clogged pipe) and do not depend on the effects of the problem (e.g., restricted flow). The direct methods discussed below are applicable only to collection pipe which is accessible to the equipment used. No direct methods exist for the periodic inspection of buried granular drainage and filter layers, or, of course, for collection pipe without adequate access.

5.2.1 Visual Inspection

Discussion

Visual inspection is the simplest inspection procedure. It requires the inspector to use no more than his or her senses and perhaps some basic equipment such as a flashlight or liquid level measuring device. Visual inspection is limited because most of the system is buried and not accessible to the inspector. Access is provided primarily by manholes and riser pipes; visual inspection therefore focuses on the information obtained via these two features. Components of the system which are not buried can also be inspected.

The purpose of visual inspection is to verify qualitatively that the leachate collection system is functioning as intended. The inspection required by RCRA, referred to in Section 5.1 above, would likely be a visual inspection. The purpose of that inspection is to detect whether leachate is in the system and determine whether any problems are apparent.

Visual inspection is relatively inexpensive and can be performed as part of the regular routine of facility operation. It also can provide the first evidence that problems exist in the drainage system. An example of this would be finding no flow in a manhole where flow is expected. Visual inspection, however, is qualitative and does not reflect failure mechanisms which are in progress but are not readily evident. There may be flow in a manhole, for example, even when the drainage layer is partially clogged. More quantitative techniques are needed to discover a reduction rather than a stoppage of flow. Visual inspection is therefore less useful in preventing problems since it primarily indicates when maintenance or repair is required.

Protocol

The protocol for visual inspection at a given facility will depend on the site-specific layout of the leachate collection or cap drainage system. In particular, it will depend on the number, type and location of access points to the buried system, and on the parts of the system which are not buried. Access points to the system may include:

- manholes;
- riser or clean-out pipes;
- risers for collection sumps or tanks;
- system outflows; and

- leachate level wells.

Each of these access points should be checked for the presence of leachate and the overall condition of the access structure. Leachate flow rate and level of standing leachate should be measured, where possible. Methods for measuring leachate level are discussed in Section 5.2.2.

Components which may be accessible above ground include:

- mechanical equipment and controls;
- system outflows; and
- leachate storage tanks or surface impoundments.

The inspector should make sure that all mechanical equipment (monitors, meters, pumps) is functioning properly, and should check leachate flow (presence and rate) at system outflows and leachate level in tanks or surface impoundments. The overall condition of each component should also be evaluated.

All observations made during a visual inspection should be recorded. A generic checklist for visual inspections is provided in Figure 12. The checklist provides an example of the type of information to be recorded for each component mentioned above. The facility operator should design a checklist for a specific facility based on the layout of the leachate collection or cap drainage system at that facility.

Inspection results which indicate potential problems with the leachate collection or cap drainage system include:

- irregular flow patterns;
- no flow when expected;
- significantly higher or lower flow than expected;
- high leachate levels over the liner;
- full collection tank or sump;
- declining level in tank or sump which has not been pumped;
- inoperable equipment; and
- mechanical or structural problems, including seepage, cracks, and broken parts.

Leachate levels, flow rates, and location where leachate was noted or measured can be plotted on a diagram of the leachate collection system. Preparing such a diagram weekly facilitates the analysis of visual inspection data in assessing the performance of a leachate collection system over time. The status of facility operations (e.g., operating areas, number of lift(s) in place, waste types disposed of) on the day of inspection should also be recorded on the diagram.

Basic Data

Name: _____

Time: a.m./p.m.

Date: / /

Weather Conditions:

Precipitation since previous inspection:

Depth of snow pack:

Type of Inspection

Daily _____

Weekly _____

After Storm _____

Other:

Storm Data

Date(s) of storm _____

Duration _____hrs.

Amount Rain _____in.

Comments:

Manhole*

1. Location or ID: _____
2. Flow observed? yes/no
   a If yes, rate ____cfm
   b Meas. techn: _____
3. Pump on__or off__
4. Standing leachate? ____yes/no
   a If yes, level: _____ft
   b Meas. techn: _____
5. Problems noted:
6. Comments

Sump/Tank*

1. Location or ID: _____
2. a Leachate level _____ft
   b Meas. techn: _____
3. Flow observed? ____yes/no
   a If yes, rate _____cfm
   b Meas. techn: _____
4. Pump on__or off__
5. Problems noted:
6. Comments:

Riser*

1. Location or ID: _____
2. Leachate present yes/no
   a If yes, level: _____ft
   b Meas. techn: _____
3. Problems noted:
4. Comments:

Outflow*

1. Location or ID: _____
2. a Flow rate _____cfm
   b Meas. Techn. _____
3. Problems/Comments:

Mechanical Equipment*

1. Location or ID: _____
2. a Operating: __yes/no b operable: yes/no
3. Problems:
4. Comments:

*Attach diagram of entire leachate collection system with results recorded.

Inspector:	Approved by: _____ (print)
Signature: Date:	Signed: Date:

Figure 12. Checklist for visual and leachate level inspections.

5.2.2 Leachate Level Over Liner

Discussion

While visual inspection of leachate collection systems will indicate whether leachate is being generated, it will not address the basic questions of whether all the leachate generated is being collected. Observing the leachate level above the liner provides a direct measurement of leachate collection system performance. Since the leachate collection system is designed to maintain leachate levels over the liner at less than 30 cm (1 ft), higher levels may indicate problems with the leachate collection system. This is especially true if levels are significantly higher or occur over prolonged periods. Therefore, observation of the leachate level above the liner should be an integral part of an inspection program.

The preferred method for observing and measuring leachate level above the liner is through the use of observation wells installed specifically for this purpose. Design of observation wells is similar to that of groundwater monitoring wells, which are discussed in detail in Fenn et al. (1977). The observation-well casing pipe is extended down to a point in the drainage layer below the desired maximum liquid level. The bottom meter (or more) of the pipe is packed in gravel and the pipe screened to allow free movement of the liquid through the pipe.

When observation wells are not available, some insights into the probable leachate level above the liner can be derived by analyzing measurements of the leachate level at key points in the leachate collection system. This analysis is recommended even in cases where observation wells are available in order to give a more complete picture of leachate conditions.

Figure 13 summarizes the probable leachate levels in observation wells and leachate collection system measurement points under different leachate and system performance conditions. This figure demonstrates that leachate levels in a sump or riser pipe may not give an accurate indication of leachate levels over the liner. This is due to drawdown of leachate levels in the vicinity of leachate collection pipe, and abrupt changes in leachate level which may be caused by clogged pipe or drainage material. Only a properly installed observation well gives a reliable measurement of leachate level over the liner at a given point. While measurement points in the collection system will provide some information on leachate level above the liner in landfills with no observation wells, these results must be used cautiously and in conjunction with other data. Ideally it will be possible to measure leachate levels in observation wells and the collection system. In such cases, the data can be used not only to identify situations of high leachate level but also as a diagnostic tool to determine the type and location of the collection system failure.

Protocol

During the design and initial start-up phase of a facility, the operator should work closely with the design engineer to establish a site-specific

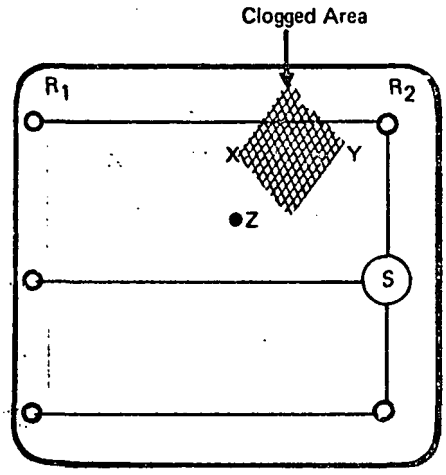

Plan View of Landfill Cell

● Monitoring Well
○ Riser
◯ Sump

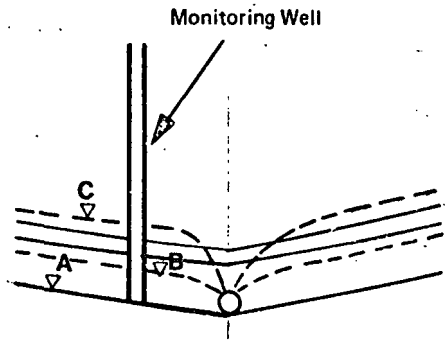

A = No Leachate
B = Leachate Less Than 30 cm
C = Leachate Greater Than 30 cm

Leachate Level Definitions

	Leachate Level @ X	Leachate Level @ Y	Level in Monitoring Well Z	Level in Riser R_1	Level in Riser R_2	Level in Sump S
Before Clog						
	A	A	A	A	A	A
	B	B	B	B	B	B
	C	C	C	B	B	B
After Clog						
	A	A	A	A	A	A
	B	A	B	B or A	B or A	B or A
	C	A	C	C or B	B or A	B

Assumes uniform leachate production across cell.

Figure 13. Probable leachate levels at observation points before and after clogging under varying flow conditions.

protocol for collecting, recording, and analyzing leachate level data. At an existing facility, the operator should complete the following preparation steps prior to initiating a comprehensive leachate level measurement program:

Step 1 - Identify Measurement Points: All points where leachate level can be measured should be identified and labeled. In addition to observation wells, points in the leachate collection system such as manholes, risers, and sumps should be included. Factors should be developed for converting the anticipated field measurement (e.g., distance from top of observation well to leachate level) to the leachate level above the liner for analysis.

Step 2 - Map Measurement Points: All identified measurement points should be plotted on a site map.

Step 3 - Develop Conceptual Leachate Flow Model: An expected leachate flow pattern, expressed in terms of the likely relationships between measurement points, should be developed. These relationships depend on the specific leachate collection system design.

Step 4 - Record and Store Data: A system should be developed for plotting or recording data so that it is easy to observe trends at related measurement points. A leachate level recording sheet should be developed in conjunction with the visual inspection recording sheet (Figure 12). In addition to providing space for recording leachate level at inspection points and observation wells, this sheet should include a record of weather conditions on the day of the inspection, accumulated precipitation since the previous inspection, and depth of snow pack.

In most cases a single absolute measurement of leachate level may not provide significant information when taken out of context, since leachate levels will vary across the facility and with time. As a result, it will be important to develop a recording procedure which will allow the facility operator to readily identify situations where areal and temporal trends are not consistent. The data are multidimensional and therefore require careful presentation to ensure trends can be readily identified.

The recording of leachate level data is an ideal application for a personal computer. Using commercially available spread sheet programs a facility owner/operator can develop a site-specific data management procedure. A carefully designed system would allow direct entry of field data in the order in which the measurement points have been inspected. The data could then be automatically converted to depth above liner and plotted against historical data in order to provide an easy means for evaluating changes with time. Similarly, the data could be automatically plotted on a grid with contour lines to allow for evaluation of areal trends. Incorporating data in a computer data base would permit manipulations such as three point running averages to identify trends more clearly. Further, a program could be developed which would automatically compare the leachate level trends in measurement points which are expected to have similar leachate levels. This automatic

comparison could provide a readout of situations in which the temporal trends observed at adjacent measuring points are inconsistent.

In situations where a personal computer is not available for data management, or where the number of measuring points is very small, the operator may wish to plot the liquid-level data for each point against time in order to observe changes with time. In any case, the operator should plot the data for a given inspection on a site map to allow quick evaluation of areal inconsistencies, and to provide a consistent format for data presentation.

Leachate Level Measuring Devices

A number of methods can be used to measure the level of leachate at measurement points throughout a facility. Some methods measure the distance from the surface and others measure the depth of leachate above a fixed point (e.g., bottom of the manhole). In either case the raw field data will have to be calibrated to a level above the liner for analysis.

Methods which measure distance from surface to leachate level include:

- Conventional Tape Method

A weight is placed on the end of a measuring tape. The last several centimeters of the tape are marked with chalk before it is lowered into the measuring point. When a splash sound indicates that the weight has reached the leachate, the tape is lowered an additional few centimeters into the measuring point and a reading is taken against a reference point on the surface. The tape is then brought to the surface. The distance the tape extended into the leachate (as noted by the chalk becoming wet or washing away) is subtracted from the first reading to give the distance from the reference point to the leachate level. An alternative conventional tape method is to use a cylindrical weight, or "popper", which makes a distinct "pop" noise when the weight reaches the leachate. Depth to that level can then be measured from the tape. Both methods are fairly inaccurate compared to other methods, described below. If used, the procedure should be repeated several times and the results averaged for a more precise measurement.

- Electronic Gauge

An electronic gauge can be used in combination with a measuring tape to more accurately identify the liquid level. The device, which may have both float and conductivity level detection systems, is attached on a measuring tape and lowered into the well or manhole. When any liquid is encountered the float light is activated. When a conductive liquid is encountered the conductivity light is also activated. Using this device it is possible to determine whether an oily, nonconductive layer is on top of the leachate and to estimate its thickness. The lights are located directly on the gauge and are viewed by looking down the well. When the lights are activated the operator takes a reading of the tape against the fixed reference point on the surface.

- Automatic Level Measurement

An automatic mechanical float or conductivity gauge can be used to provide continuous leachate-level measurements. As the liquid level rises the float or gauge also rises and the slack in the wire is taken up by a spring mechanism on the surface. The spring mechanism is calibrated to indicate the depth to liquid level. The depth can be read as needed by an operator or continuously recorded on a graph.

Methods which measure depth of leachate above a fixed point include:

- Electronic Float Level Detector

This type of device has a float which activates a series of magnetic switches when lowered to the bottom of the observation point. A similar design can be permanently installed in a measuring point and provide an electronic readout of leachate depth. The switches are typically spaced at 2.5 cm (1 in.) intervals.

- Conductivity Float Level Detector

Conductivity switches can be placed at 0.6 cm (.25 in.) intervals rather than the 2.5 cm (1 in.) intervals described for float-activated magnetic switches. While it is possible to get significantly greater precision using conductivity switches, several disadvantages are associated with the technology. The switches can be fouled easily, it is possible to get a creeping of liquid up the sides of the gauge causing incorrect measurements, and contamination may result in incorrect measurements. Therefore, conductivity gauges are not recommended.

- Pressure Transducers

A pressure transducer can be installed in the bottom of each measuring point. The transducers are sensitive to an increase in the pressure caused by increased liquid levels. Unlike the conductivity gauge and the float gauge, the pressure transducer provides a continuous measurement rather than an incremental measurement of liquid level. Pressure transducers tend to be fairly sensitive and are therefore not recommended for portable gauges but only for permanent installations. Readouts from pressure transducers can be transmitted electronically and recorded automatically.

5.2.3 Leachate Quantity

As noted above, the Minimum Technology Guidance (EPA, 1985a) recommends that records be kept of the quantity of leachate collected. Comparing these data with the quantity of leachate expected over the same period can provide useful information on leachate collection system performance. Empirical methods can be used to analyze trends in leachate quantity data. Predictive models, such as those used in leachate collection system design, provide a more quantitative approach to the evaluation. These two techniques are discussed below.

5.2.3.1 Empirical Method

The quantity of leachate collected at a facility can be expected to follow some basic trends over the lifetime of the facility:

- Prior to and during placement of the first lift of waste, leachate generation may closely correspond to precipitation, since the precipitation falls directly on the leachate collection system.

- As the collection system is covered with waste, leachate generation should decrease or go to zero since the waste will absorb much of the precipitation.

- As the wastes become saturated with liquid (i.e., reach field capacity) leachate generation should increase, although each new lift of waste increases the capacity of the landfill to store liquid.

- At some point, a steady-state condition may be reached where a correlation can be found between precipitation and leachate generation. For example, leachate generation may be 80 percent of precipitation with a lag time of 1 week, with the other 20 percent being absorbed in the uppermost lift of waste.

- This steady-state condition may continue until the landfill is closed with a final cover. Leachate generation would then be expected to decrease since precipitation inputs to the waste mass are eliminated or greatly reduced.

- Leachate generation should eventually drop to zero, or to some small amount if the cover is not completely effective in eliminating liquid inputs.

These trends will vary depending on site-specific conditions such as the absorptive capacity of the waste, waste placement procedures, climate, precipitation patterns in a given year, and surface area of the open portion of the cell. Leachate generation records can be compared with expected patterns for a given collection point, with generation records at other collection points in the same cell, or with generation records from other cells at the same facility. Any major deviations from leachate generation trends expected at a given site may indicate problems with the leachate collection system.

5.2.3.2 Leachate Prediction Models

A number of analytical tools are now available which are used to predict leachate generation, primarily for design purposes. Gee (1983) compared leachate predictions from three water budget models and one empirical model with actual leachate generation in a field solid waste lysimeter. The results, shown in Table 17, indicate considerable variance between predictions and actual leachate generation even when aggregated to a yearly base. Figure 14 presents the same data expressed as percentages of actual leachate production. The figure illustrates that the state of the art for predicting

TABLE 17

ANNUAL LEACHATE PREDICTIONS AND MONTHLY MEAN ERROR COMPARED TO ACTUAL LEACHATE PRODUCTION*

Prediction Method	1972	1974	1975	Overall
Rainfall Simulator Model:				
Mean Monthly Abs. Error (in.)	.40	.38	.34	.37
Total Leachate (gal.)	9,434	8,955	7,108	25,497
HELP Model:				
Mean Monthly Abs. Error (in.)	.29	.67	.38	.45
Total Leachate (gal.)	6,809	10,277	8,477	25,563
HSSWDS Model:				
Mean Monthly Abs. Error (in.)	.75	.81	.78	.78
Total Leachate (gal.)	12,212	15,123	12,803	40,138
Thornthwaite Water Balance:				
Mean Monthly Abs. Error (in.)	.44	.69	.61	.58
Total Leachate (gal.)	10,423	15,130	10.654	36,117
Actual Average Monthly Leachate Production Cell 1 (in.)	.69	.71	.36	.59
Total Actual Leachate (gal.)	8,998	9,184	4,740	22,922

*1 inch = 2.54 cm
1 gallon = 3.785 liters

Source: Gee, 1983.

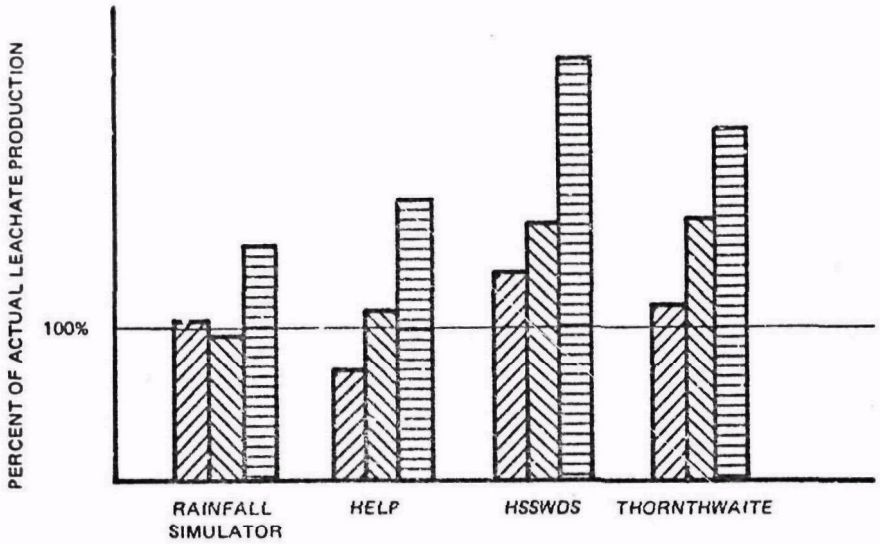

Total Annual Leachate Prediction

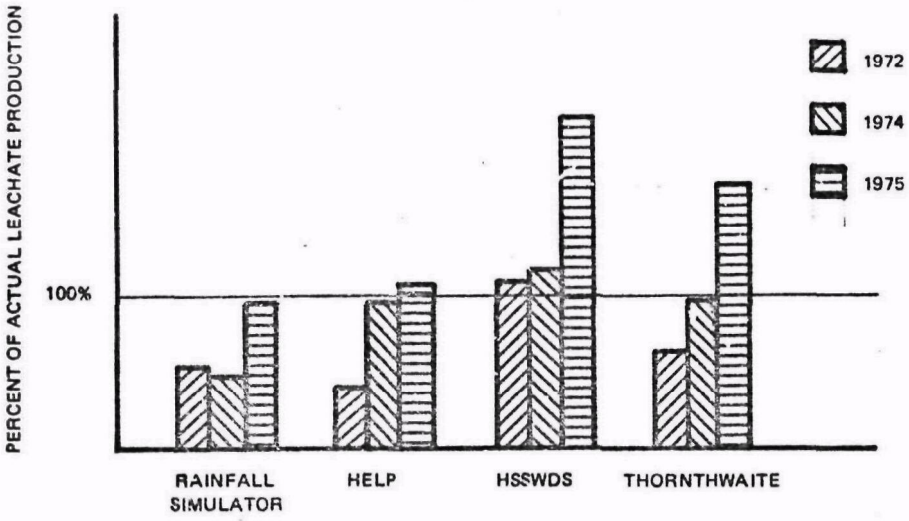

Mean Monthly Absolute Error

Figure 14. Analysis of leachate prediction models.

leachate generation for short time intervals, even using an empirical model developed for the specific site conditions, is very rudimentary. Mean absolute errors in Figure 14 range from 40 to 200 percent of flow for the short-time period predictions which would be essential for monitoring leachate collection system performance.

Since leachate prediction techniques have been used to estimate the maximum anticipated leachate flow for sizing collection and treatment systems, these inaccuracies can be accounted for in traditional factors of safety and over-design. Except for precipitation, users of these techniques must estimate values for a number of site-specific variables. The outcome of the calculation is very sensitive to the levels assigned to each of these estimated variables. Based on the results of a sensitivity analysis of the EPA Water Balance Method to variations in the coefficient of runoff and available soil moisture, Kmet (1982) concludes "it is apparent that given the right set of assumptions practically any percolation rate (leachate generation rate) can be justified." Further, there has been limited verification of leachate prediction methods with actual leachate production records at full-scale facilities.

Because of the high degree of sensitivity of the various leachate prediction models, it would be impossible to determine whether production of leachate at lower-than-predicted levels is the result of a system failure or poor modeling. Therefore, caution should be exercised when using leachate prediction methods for ongoing monitoring of leachate collection systems.

Protocol

Precipitation data either can be collected onsite in a small meteorological station or can be obtained from the nearest U.S. Weather Service Station. Leachate generation data should be gathered from as many discrete points as the facility design permits. In most cases, leachate quantity data will be obtained from leachate pumping records. If there are a number of pumping stations throughout the facility, records should be maintained for each station separately, so that the leachate generation patterns in adjacent sections of the same facility can be compared.

To facilitate recordkeeping the site operator should develop a chart to convert leachate quantities from liters (or gallons) to centimeters (or inches) for the drainage area. Leachate generation in centimeters (inches) can then be plotted on the same graph with precipitation in centimeters (inches). Weekly records are recommended.

5.2.4 Leachate Quality

Analysis of leachate quality may provide information indicative of the potential for failure of a leachate collection system by the various failure mechanisms. The appropriate indicator parameters depend on which of the failure modes is involved. Analysis of leachate quality may be useful in determining the susceptibility of the system to pipe deterioration, sedimentation, biological growth, chemical precipitation, or biochemical precipitation.

Analysis of leachate quality may indicate whether conditions conducive to failure are present. None of the techniques discussed below, however, provides absolute confirmation of a problem; they are indications of the possibility that a problem may exist. On the other hand, the absence of a positive indication may suggest a small likelihood of failure by the mechanism being examined.

Analysis of leachate quality is primarily a conceptual technique for analyzing leachate collection system performance. Therefore, specific protocols are not provided. The technique is discussed since it may provide useful information about the failure mechanisms discussed in Section 2. It also may provide useful information about the potential for clogging of the drainage and filter layers, for which no direct inspection methods are available.

5.2.4.1 Pipe Deterioration

Pipe deterioration can be caused by a variety of mechanisms, including corrosion, oxidation, chemical attack, or other chemical reactions. The susceptibility of collection pipe to chemical attack will depend on the pipe material used. Generally, waste constituents which can damage a pipe are considered to be incompatible wastes and are excluded from disposal in the cell. Periodic monitoring of leachate pH and analysis for chemicals of concern (e.g., organic solvents) provide a check that incompatible wastes have not been disposed of in the cell. If this analysis indicates potential problems, corrective measures may be possible to prevent pipe failure.

5.2.4.2 Sedimentation

Analysis of a single leachate sample for sediment loading does not provide an indication of the potential for sedimentation clogging of the system. A low sediment-load may indicate that no sediments are entering the system, or that all the sediments are settling out somewhere in the collection pipe. Similarly, a high sediment-load may indicate a problem with the filter or drainage layer, or may show that flow is sufficient to remove sediments which would otherwise accumulate in the collection pipe over time.

A better approach would be to consider sediment loading over time and over different sampling points in the same cell. A gradual decrease in sediment load to a steady-state level indicates that the filter is working as expected. A sharp change in the sediment content of samples from a particular location, however, may indicate a change in the status of the system (e.g., sedimentation is now occurring in the pipe; the filter layer has failed at some point upgradient of the sampling location). Historical data can be used in a manner similar to leachate quantity data described in Section 5.2.3, above. For example, large differences in sediment loading at two adjacent sampling points may indicate sedimentation problems between those two points.

5.2.4.3 Biological Growth

Clogging because of biological growth occurs when naturally-occurring micro-organisms metabolize organic constituents of the waste. Slime-forming organisms can clog collection pipes and the drainage and filter layers.

Detection in the leachate of organisms known to form slimes, and nutrients, contaminant levels, and oxygen conditions within an appropriate range to support growth would indicate potential problems.

Ford (1979 and 1980) has identified three organisms associated with clogging in drain systems: Vitreoscilla, Enterobacter, and Pseudomonas. The last is a common soil bacteria. Conservatively, if any of these species is detected, it may be presumed that biological clogging is possible. Samples of the leachate can be cultured to determine whether growth would occur under the conditions existing in the system. The sample should be taken and cultured under the conditions existing in the system, and the culture tests should be performed with a range of conditions reflecting variations in nutrient and organic composition observed over a year. This type of laboratory work, however, can be very expensive.

5.2.4.4 Chemical Precipitation

The principal mechanism for chemical deposition is the precipitation of calcium carbonate ($CaCO_3$) or, to a lesser extent, manganese carbonate. Precipitates may form whenever the concentrations of free calcium ion (Ca^{++}) and bicarbonate ion (HCO_3^-) exceed the equilibrium concentrations at a particular pH. The equilibrium relation can be expressed in terms of the Incrustation Potential Ratio (I.P.R.) as follows (Baron, 1982):

$$\text{I.P.R.} = \frac{(\text{Total alkalinity})(\text{Hardness})}{10.3 \times 10^{(11-\text{pH})}}$$

where total alkalinity and hardness are both expressed in ppm $CaCO_3$.

If the I.P.R. is less than 1, no carbonate deposition should occur. If, on the other hand, the I.P.R. is greater than 1, deposition is possible, but will not necessarily occur.

Further, other researchers have suggested ranges of these parameters for which deposition potential is positive. Shuckrow et al. (1981) developed the following ranges for the parameters appearing in the I.P.R. expression:

Alkalinity (as ppm $CaCO_3$): 20.6 to 5400
Hardness (as ppm $CaCO_3$): 700 to 4650
pH: 3 to 7.9

All the parameters involved can be measured with conventional instruments and methods.

In addition to determining the I.P.R. for the current sample, the I.P.R. for a leachate based on a series of samples over the past year would indicate the possibility of clogging under the highly variable conditions at a site. For a conservative indication of clogging potential, the I.P.R. would be calculated using values of alkalinity, hardness, and pH corresponding to the mean plus one standard deviation. The probability that any combination of conditions will produce a larger value of I.P.R. is about 10%. Samples taken

over a period of several months should be included for an accurate indication of leachate variability. Shorter averaging times may be appropriate if overall conditions within the system are known to be changing. Seasonal averages may be more appropriate in some locations.

5.2.4.5 Biochemical Precipitation

The principal biochemical process leading to potential clogging is the precipitation of ferric oxide (hydroxide) complexes from soluble ferrous mixes by biological oxidation. Manganese can be deposited in a similar manner.

Iron precipitation is a complex process which can occur with various bacteria under a variety of conditions. Kuntze (1978) suggests that pipes are likely to clog when iron concentrations are greater than 1 ppm and pH is less than 7, if the iron is from a source other than the surrounding soils (drainage layer). Iron clogging has been observed in the field at iron concentrations as low as 0.2 ppm and at pH ranging from 2.5 to 8.5 (Lidster and Ford, undated). Concentration of dissolved oxygen and redox potential also influence biochemical iron precipitation.

Leachate samples to be used in developing data to compare with these conditions should be taken, if possible just outside of the drainage layer. If iron precipitation is occurring, the resulting iron levels in the leachate exiting the system may be so low that the test results would indicate no potential problem.

In many systems, it may be possible to obtain leachate samples only at the exit. In this case, if the presence of iron or manganese-reducing bacteria along with iron or manganese is detected in the leachate, biochemical precipitation should be considered as a possibility.

If the leachate analysis indicates the possibility, a more definitive indication can be obtained by culturing samples of the leachate, augmented by ferrous ions at the maximum concentration previously observed in the leachate. Experimental conditions should include a range of redox potential (oxygen level) and pH derived from historical leachate monitoring at the site. Iron precipitation can be quite rapid, resulting from sudden changes in pH or, more dramatically, from changes in oxygen conditions due to the introduction of air into a normally anaerobic system.

Iron deposits can also form by the precipitation of ferrous sulfide through the reaction of soluble ferrous ions in the leachate with hydrogen sulfide (H_2S) produced from anaerobic sulfate-reducing bacteria (Young et al., 1982). Anaerobic conditions can arise in the drainage and filter layers in all systems, and in the collection pipes if the exit sumps are sealed from the atmosphere. If it is possible to draw a sample from the anaerobic portions of a collection system, indications of potential clogging can be determined by culturing the leachate to determine whether the necessary bacteria are present. If sulfate is also present at levels greater than a few parts per million, and iron has been observed in that sample or in previous samples clogging should be considered a possibility.

5.2.4.6 General Considerations

The above criteria can be used to indicate whether the mechanism described is likely to occur in the facility. A negative result, however, does not indicate that the mechanism will not occur. The criteria are based on experience found in the literature and do not account for the presence of particular waste constituents, or unique site-specific conditions which may hinder or enhance the failure mechanism.

Establishing the particular range of considerations under which failure mechanisms can occur at the site would help address this problem. The validity of the I.P.R. expression, for example, depends on the absence of species that would interfere with the equilibrium processes that throw calcium out of solution. Deviations from the theoretical bounding value of unity could be determined by carrying out a set of laboratory experiments using actual leachate samples at the site. Samples of leachate with the principal parameters (alkalinity, hardness, and pH) adjusted to reflect the variations observed over a period of time would be used as a basis for determining the critical I.P.R. valid at the site. Future leachate analysis would be evaluated with respect to the site-specific criteria. This procedure would reveal, to the extent that the samples used in the experiment are representative of the full range of leachate composition, the effects of interferences and deviations from the conditions for which the criteria were derived.

Similarly, it would be possible to determine a range of conditions for the biochemical oxidation of iron, parallel to the general conditions reported above, applicable to the particular site. Experiments involving biochemistry are more difficult to systematize because the microbiological flora present are hard to characterize fully and to control. Nevertheless, it should be possible to obtain values that more closely reflect specific conditions at the site than do the general indices noted in the literature.

5.2.5 Television and Photographic Inspection

Discussion

Television and photographic inspection of sewer lines is a well developed technology for locating groundwater infiltration, root penetration, and other problems with sewer lines. The same technology is applicable to leachate collection and cap drainage systems to find clogging and inspect the condition of collection lines, provided adequate access is available.

The primary advantage of television inspection is that it allows the operator to directly observe the condition of the collection pipe and precisely locate problems. Problems in their early stages (e.g., cracked pipe, biological buildup) which do not yet affect flow or the passage of maintenance equipment can be detected. In addition, a videorecorder can be used to record inspection results. The disadvantages of television inspection are that the procedure is somewhat involved and that it can be conducted only in lines with adequate access (e.g., 15 cm (6 in.) minimum diameter, access to both ends of the pipe).

Photographic inspection is less expensive than television inspection while providing most of the same benefits. Additional drawbacks of photographic inspection, however, include decreased reliability since it is not known whether the lens is blocked until after the film is developed, and it is necessary to wait for film to be developed.

Protocol

Equipment used in television and photographic inspection of collection pipe includes (Foster and Sullivan, 1977):

1. A skid mounted camera. Types of cameras include various types of color, black and white video units and 35-mm photographic equipment.

2. A light source for the camera.

3. Television cable and steel cable (on reels) with measuring equipment to determine the location of the camera in the collection pipe.

4. Sheaves or pulleys for the cables and a winch at one end to pull the camera through the pipe.

5. A control unit with a television monitor (for television inspection), communication equipment, and a camera and/or video recorder to photograph and record key locations in the pipe.

6. An electric generator if no power supply is available onsite.

Prior to television or photographic inspection, the collection pipe should be thoroughly cleaned (see Section 6), unless the purpose of the inspection is to determine the condition of the line prior to any cleaning. Then, the camera is rigged between two access points (e.g. using a rodding machine), with the camera at one end of the line connected by cable to a winch at the opposite end, which pulls the camera slowly through the line. Television cameras monitor the line continuously and photograhic equipment can be set to take a picture at regular intervals (e.g., every meter). A meter on the winch or cable reel records the distance of movement of the cable and therefore measures the location of the camera in the line. Some units display this distance on the television monitor. Cameras are available to inspect lines from 8 cm (3 in.) to 150 cm (60 in.) in diameter (although many systems only go down to 15 cm (6 in.)), and are on the order of 300 m (1000 ft) in length.

Television or photographic inspection can be conducted annually as part of regular system inspection and maintenance. This would help identify problems which may go unnoticed by other inspection and maintenance procedures. The technique can also be used to locate or identify problems which are discovered or suspected by other methods. Television inspection, for example, can be used instead of excavation to identify the cause of pipe blockage discovered during routine flushing (assuming the pipe is not totally blocked and the camera can be rigged between two access points).

A checklist for television or photographic inspection is given in Figure 15. It is important to record the type of inspection being conducted and the precise location of collection lines being inspected. A description of all problems noted, including location, should be given. Problems which can be identified by television or photographic inspection include:

- partial clogging of the pipe;
- total or partial clogging of the pipe openings;
- deviations in the line (straightness) and grade (slope) of the pipe;
- broken or cracked pipe;
- separated or uneven pipe joints;
- foreign objects in the pipe; and
- areas of leachate accumulation.

5.2.6 Inspection During Pipe Maintenance

Discussion

Pipe maintenance techniques, discussed in Section 6, can also be used (simultaneously) to inspect collection lines. The fact that maintenance equipment can pass through the collection lines indicates that there are no major clogs or broken pipes, and that the system is continuous. The only major difference between running a low-pressure jet, for example, through a collection line for inspection as well as maintenance rather than maintenance alone is that the former utilizes a meter to measure the location of the jet in the pipe. When the progress of the jet is hindered, therefore, the location of the problem can be discerned.

Protocol

Inspection via maintenance related techniques occurs whenever maintenance equipment is run through the collection line. Regular inspection can occur quarterly, semi-annually or annually. Special inspections using this technique are discussed in Section 5.3.

A checklist for inspection using maintenance techniques is given in Figure 16. This checklist can be used for both regular and special maintenance-related inspection. The primary data inputs are the status of each section of line (defined by adjacent access points or one access point and a label) and the location of the blockage in unpassable sections. A diagram of the leachate collection system should also be provided with access points, and labels, and the status of each line should be clearly marked.

Protocols for maintenance techniques are given in Section 6.

5.3 SPECIAL INSPECTIONS

Special inspections are required at specific times in the life of a leachate collection system. The most significant times for special inspections are:

Basic Data

Name: _____

Time: _____ a.m./p.m.

Date: ___/___/___

Type of Inspection

TV ____

Photo ____

Inspection by:

Company Name: _____

Address: _____

_____

Type Record Kept

Photo ____

Video ____

Notes ____

None ____

Pipe Pre-cleaned

Date: ___/___/___

Technique: _____

By: _____

None ____

Reason:

Reason for Inspection

Annual ____

Problem Noted ____

describe:

Other ____

describe:

Location of Inspection*

Cell or area _____

1st access _____

last access _____

distance between

access points ____ft

*Attach diagram of inspected area with access points labelled, problems and locations noted.

Comments:

Results

No problems ____

Type	Description	Location
Clogged pipe		
Clogged Slots		
Pipe line/grade		
Pipe cracked		
Pipe broken		
Pipe joints		
Ponded leachate		
Other:		

Inspector:	**Approved by:** _____ **(print)**
Signature: **Date:**	**Signed:** **Date:**

Figure 15. Checklist for television or photographic inspection.

Basic Data	Type of Inspection	Maintenance by:
Name _____	Quarter _____	Company Name: _____
Time ____ a.m./p.m.	Semi-Annual _____	Address: _____
Date ___/___/___	Annual _____	_____
	As-built _____	Technique:
	1st lift _____	
	Other _____	

First Access Point	Second Access Point or Line Label	Results* Clear	Blocked	Location of Blockage	Comments

*Attach diagram of inspected area with access points, line labels, clear lines, blocked lines, un-inspected lines, and location of problems noted.

Inspector:	Approved by: _____ (print)
Signature: Date:	Signed: Date:

Figure 16. Checklist for maintenance-related inspection.

- after construction is completed;
- after the first lift of waste has been placed; and
- when problems are identified with system performance.

5.3.1 After Construction

After construction, inspection is needed to verify that the leachate collection system was constructed as described in as-built documentation. This inspection, called an as-built inspection, can be carried out as part of the Construction Quality Assurance Plan. The inspection can be either a maintenance-related inspection or a television or photographic inspection. Inspection protocols for these techniques are discussed above.

The main purpose of an as-built inspection is to verify that the collection line is continuous and not blocked. Television or photographic inspection can also verify that the alignment and overall condition of the line is satisfactory. Problems noted during an as-built inspection can be easily corrected since waste has not yet been placed at the facility.

5.3.2 After First Lift Has Been Placed

Inspection of the collection pipe after the first lift of waste is placed is important to ensure that the pipes were not damaged during placement and compaction of the waste. Pipes are most susceptible to crushing or displacement during placement of the first lift of waste since there is not yet a sufficient depth of waste to help diffuse equipment loading. Inspection after the first lift would be a maintenance-related or a television or photographic inspection. Inspection protocols for these techniques are discussed above. If the pipes have been inspected after construction, this inspection need only determine whether damage has occurred during placement of the first lift of waste. Problems noted can still be corrected with relative ease since only one layer of waste above the damaged section would have to be excavated.

5.3.3 When Problems Are Identified with System Performance

In order to address problems noted during inspections, it is necessary to locate and diagnose the extent and nature of the problem. Often, the location and nature of a problem will be discovered during the inspection procedure. A direct inspection technique, for example, discovers the exact location in a collection pipe where the clog begins and may be able to determine the mechanism of failure. Alternatively, high leachate-levels in observation wells do not reveal the cause of the problem, only the location of the effect.

When a problem is suspected as a result of one type of inspection, other inspection techniques described above can be used to locate the problem. Clogged collection pipe can be accurately located using direct inspection methods, provided there is adequate access to the pipe network. Problems in the drainage or filter layers can be located by examining data from various

access points and leachate-level indicators. Additional observation wells can be installed in the area of concern to provide further information and document the problem. Once the cause of the problem has been located, excavation can be used, if necessary, for further diagnosis.

Table 18 provides general information on diagnosing problems in leachate collection systems.

TABLE 18

DIAGNOSING PROBLEMS

Symptom	Possible Causes
• High leachate levels above liner, constant over time	• clogged collection lines • clogged drainage layer • clogged filter layer • full sump • local ponding due to differential settling
• High leachate levels after rainfall only, leachate drains slowly during dry weather	• partially clogged collection lines, drainage layer or filter layer • undersized system
• High leachate levels, condition improves after cleaning	• clogged collection lines
• High leachate levels, condition does not improve after cleaning	• clogged drainage layer or filter layer • local ponding due to differential settling • clogged collection pipe openings
• Historical records indicate lower leachate flow than expected	• clogged collection lines, drainage layer or filter layer • ponding in waste layers • no system problems, errors in water balance modeling
• Historical records indicate higher leachate flow than expected	• no system problems, errors in water balance modeling
• Leachate levels in sump remain high even during pump cycles	• undersized pump, pump cycles too short
• Cleaning difficult or cannot be accomplished using conventional equipment	• crushed, separated or clogged (mature deposit) collection lines • bend in collection line or access point too sharp • spacing between access points too great • foreign object in collection line

(continued)

TABLE 18 (continued)

Symptom	Possible Causes
• material from drainage or filter layer in sump	• broken or separated collection pipe • collection pipe opening too large • improper particle size distribution
• No flow at inspection point when expected	• upgradient clog of collection line, drainage layer or filter layer
• "Clog" material in outflow	• partially clogged collection pipe, pip openings or drainage layer
• Leachate ponding or seepage out of waste	• high leachate levels, see above • local leachate ponding due to impermeable waste or intermediate cover layers

6.0 MAINTENANCE

6.1 INTRODUCTION

Maintenance of a leachate collection and cap drainage systems is needed to ensure that liquid will be effectively removed from over the liner throughout the lifetime (and post-closure care period) of the facility. There has been little experience, however, with maintenance of these systems. Typically, collection pipes are maintained only when problems are noted; that is, maintenance techniques are used as repair measures rather than for system maintenance.

The notion that the need for preventive maintenance is obviated by the ability to repair these systems seems shortsighted for at least two reasons. First, historical evidence indicates that drainage systems of all types require preventive maintenance to operate at maximum efficiency and to prolong service life (Smith, 1976). Second, some failure mechanisms may be extremely difficult to stop once the pipe is clogged. Young iron deposits, for example, may be easily removed by preventive maintenance techniques even though the effect of the deposit may not yet be noticeable. However, mature deposits which do affect leachate flow may be extremely difficult, if not impossible, to remove by standard maintenance or repair methods (Ford, 1979).

The basic objectives of a maintenance program are (Smith, 1976):

1. To keep the system operating near maximum efficiency;
2. To obtain the longest operating life of the system; and
3. To accomplish the above two objectives at minimum cost.

Underground drainage systems, in general, require minimal maintenance (Smith, 1976). The amount of maintenance required for a leachate collection or cap drainage system will vary depending on design, construction quality, operating procedures, and leachate characteristics (quantity and quality). Collection pipes, for example, may need to be cleaned several times a year if the leachate has a high sediment load or if the system is highly susceptible to other forms of clogging. Alternatively, annual cleaning may only be a safety measure at facilities where clogging mechanisms are not active. At all facilities, regular maintenance of mechanical equipment (e.g., pumps) is required. Further research is needed to determine the cost-effectiveness of preventive maintenance in meeting the above objectives.

Mechanical and hydraulic methods for cleaning collection pipes are discussed below. These techniques were developed for maintenance of sewer pipes. Experience with these techniques for leachate collection system

maintenance is limited. Two major constraints on using these techniques for leachate collection systems are more limited access (e.g., risers used instead of manholes, manholes surrounded by waste) and the use of plastic pipe. Operator safety is also of greater concern for leachate collection system maintenance because of the potentially hazardous nature of the leachate. Safety considerations are discussed in Water Pollution Control Federation (1980).

Procedures are not given for maintenance of drainage layers and filter layers since no methods are currently available to mitigate failure mechanisms which may be active in these layers. Potential failure of drainage and filter layers is addressed through design, construction and system operation, including control of waste characteristics, discussed in Section 3. In addition, maintenance of mechanical equipment is not discussed. It is recommended, however, that manufacturers' recommendations for equipment maintenance be carefully followed. Information on equipment maintenance and on maintenance of drainage systems, in general, can be found in Smith (1976).

Figure 17 gives an example of a collection pipe maintenance checklist for use with the methods described in Sections 6.2 and 6.3. The checklist can be used to record the reason for the maintenance, the maintenance method used, and maintenance results. Actual checklists used should be tailored to meet the needs of a specific facility, and may include a schematic of the drainage system.

6.2 MECHANICAL METHODS

6.2.1 Rodding/Cable Machines

Discussion

Rodding machines and cable machines are both designed to power the rotation of various attachments used to clean sewer lines. Rodding machines use a series of rigid rods, joined to make a flexible line, and cable machines use a continuous cable to both spin the attachment and push and/or pull it through the collection line or sewer. A typical rodding machine is shown in Figure 18, and typical attachments for both types of machines are shown in Figure 19. Special attachments are available for use in plastic pipe.

Both rodding and cable machines can be used to clean collection lines and remove clogs. Cables are applicable to smaller lines (5 to 30 cm; 2 to 12 in.) and rods to larger lines (15 to 122 cm; 6 to 48 in.). The efficiency of rodding in lines greater than about 38 cm (15 in.) may be limited by the tendency of the rods to bend at the joints, thereby reducing their power (Foster and Sullivan, 1977). Both types of machines can be used in runs up to 300 m (1000 ft), and both have the advantage that "threading" is not required. Since the apparatus does not need to be pulled through the line, only one access point is required. Rodding and cable equipment can be used to thread the line for other equipment which does need to be pulled, such as a television inspection camera or cleaning bucket.

Basic Data	Reason	By
Name: _____	Scheduled ____	Company: _____
Time: _____ a.m./p.m.	– Period: _____	Address: _____
Date: ___/___/___	Special _____	_____
	– Specify: _____	Contact: _____

Methods Used:

1. Cable machine _____ Attachments: a. _____ b. _____ c. _____ d. _____
2. Rodding machine _____ Attachments: a. _____ b. _____ c. _____ d. _____
3. Jetting _____ psi _____
4. Propelled devices _____ Specify: a. _____ b. _____ c. _____ d. _____
5. Other _____ Specify: a. _____ b. _____ c. _____ d. _____

Results

Section Cleaned*	Method No.	Material Removed	Problems/Comments

*Schematic attached: Yes _____ No _____

Comments:

Inspector: Approved by: _____

Signed: Date: Signed: Date:

Figure 17. Checklist for collection pipe maintenance.

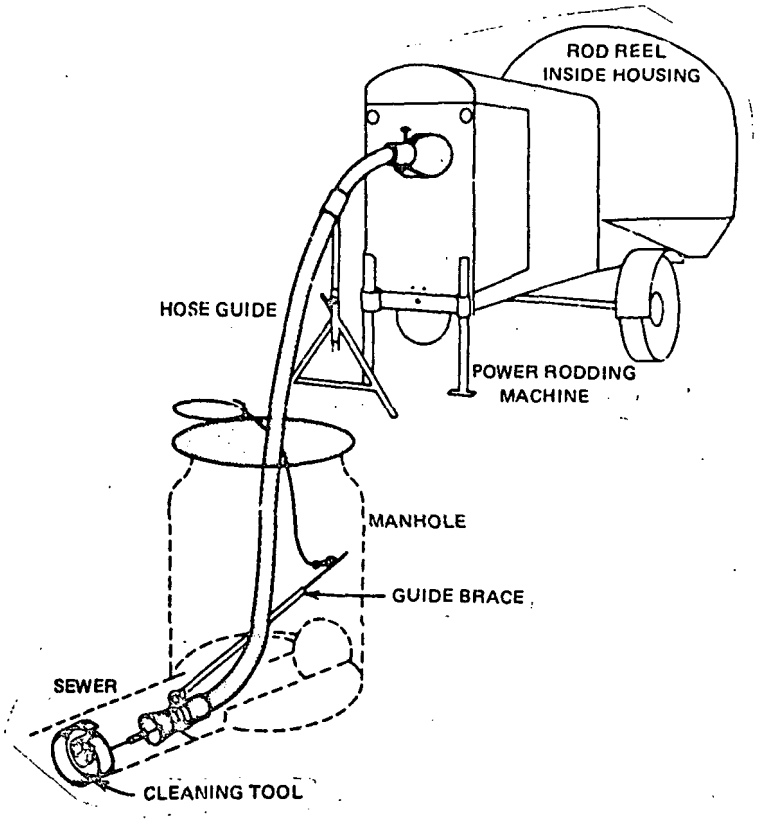

Figure 18. Power rodding machine.
(Source: Hammer, 1975.)

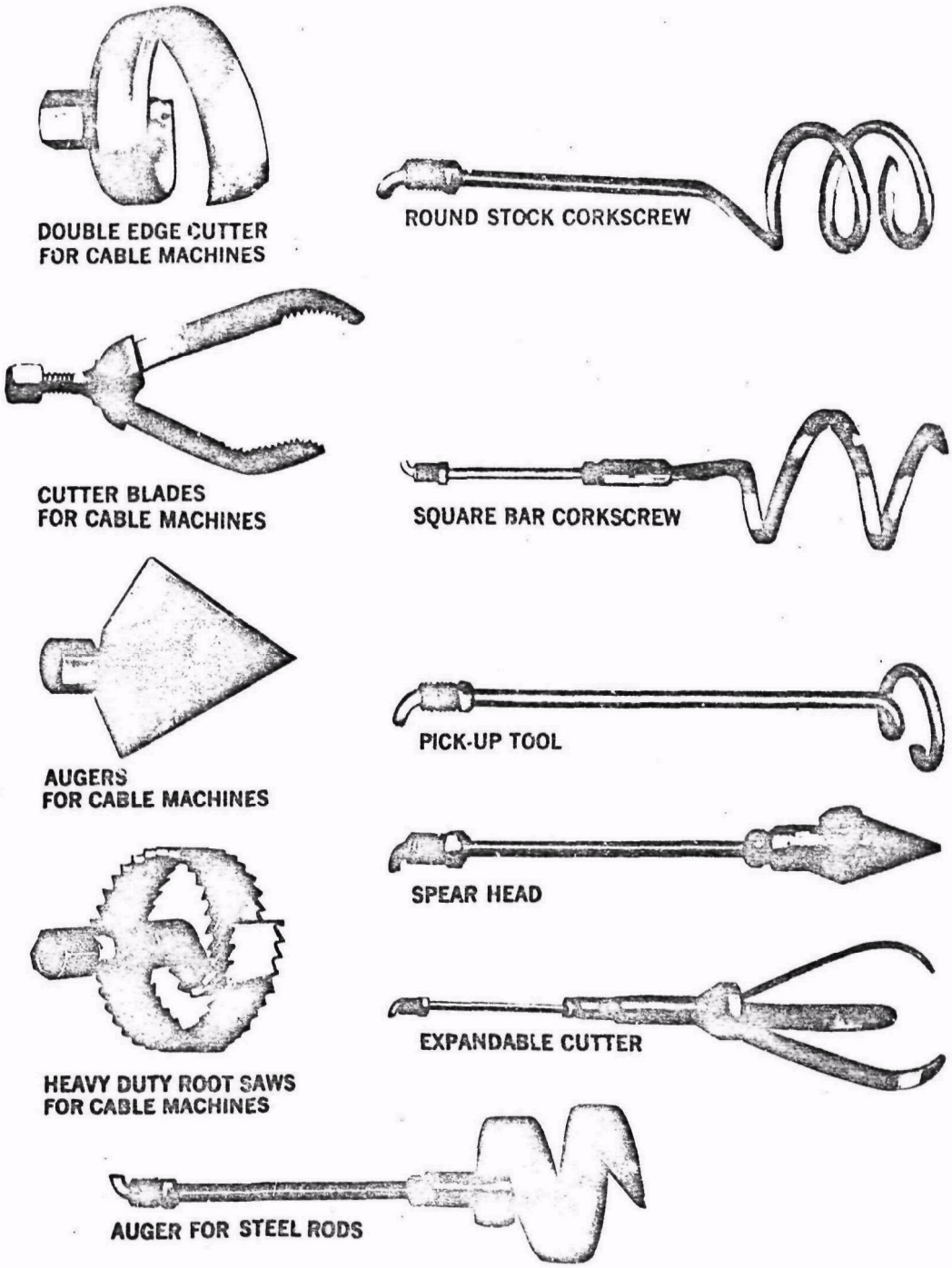

Figure 19. Typical attachments for rodding and cable machines.
(Source: W.S. Darley & Co., Melrose Park, IL.)

The primary disadvantage of rodding/cable cleaning is that the dislodged materials may not be removed from the line. Large quantities of water may be required to flush the lines subsequent to rodding or cable cleaning.

Rodding/cable cleaning will be most applicable to leachate collection or cap drainage systems in situations when flushing or jet cleaning alone is not effective or is not applicable. An example would be a line where flushing does not remove biological buildup and jetting is either not available or has been shown to damage the drainage layer because of the configuration of pipe perforations. In addition, rodding or cable cleaning may be less expensive than jetting in certain areas.

Protocol

The same protocol is used for rodding and cable cleaning. The power supply for the equipment is placed at the downstream manhole which provides access to the line to be cleaned. An appropriate attachment is selected and installed at the end of the rod or cable. The cable or rod is then placed in the line and the machines turned on. Controls include various lateral speeds to move the equipment forward or backward through the line, and rotational speeds to regulate the spin of the attachment. Maximum rotating speed should be used when the equipment is moving forward in the line (Foster and Sullivan, 1977). Specific procedures for operating rodding or cable machines can be obtained from the equipment manufacturer. It is anticipated that operators of land disposal facilities will hire an outside firm to clean collection lines by this method, although purchase or rental of appropriate equipment is possible.

Problems encountered during cleaning should be described in the maintenance record. (For example, see Figure 19.) Potential problems include sections which are difficult or impossible to clean. The location of these sections and the attachments used should be noted. Most cable and rodding machines have a meter which measures the distance of the equipment in the line. The meter should be zeroed as the equipment is placed in the line. In addition, dislodged material should be inspected before (or after) it is removed from the manhole. Pieces of pipe, drainage-layer material, or waste in the debris indicate a broken or deteriorated section of collection pipe. Chunks of biological material and chemical precipitation, or excessive sediments in the outflow indicate clogging mechanisms at work and may require further investigation.

6.2.2 Buckets

Discussion

Buckets may be used to remove large quantities of sand, gravel, and other materials from collection lines. The bucket is pulled through the line by a steel cable connected to a powered winch at the upstream manhole. When the bucket is full, it is pulled by a winch at the downstream manhole and emptied. Buckets are designed to open when pulled in one direction and to close when pulled in the other. The apparatus used for bucket cleaning is shown in Figure 20.

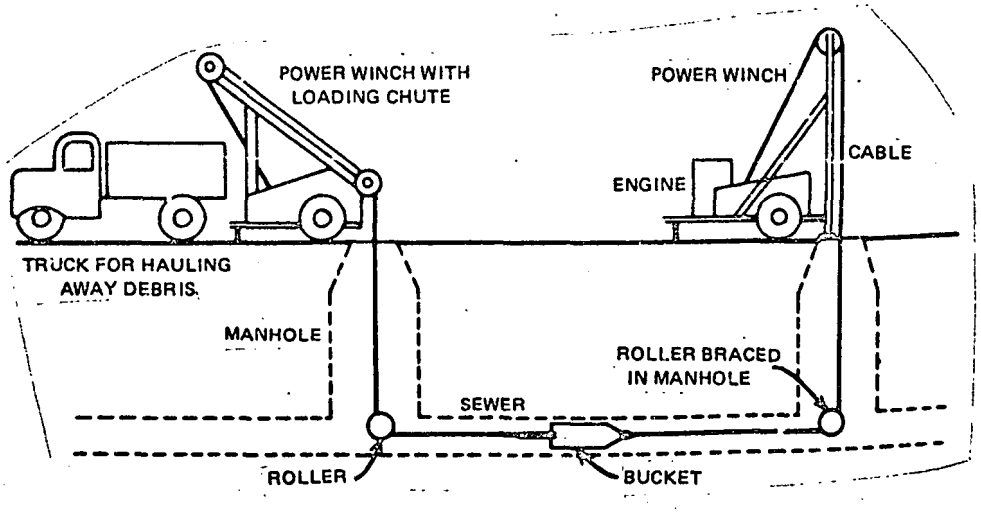

Figure 20. Schematic of bucket machine cleaning.
(Source: Hammer, 1975.)

The primary advantage of bucket cleaning is that large quantities of material can be dislodged and removed. Various accessory tools are also available, once the equipment is set up, to remove materials not dislodged by the bucket. These tools include a "porcupine," which is similar to a stiff wire brush, and a "squeegee," made of strips of rubber (Foster and Sullivan, 1977).

The primary limitation of bucket cleaning is that access to a manhole at each end of the pipe is required, and the line must be threaded. A rodding machine, for example, can be used to push a cable through the line to be attached to the bucket, which needs to be pulled in both directions.

Buckets are available for use in lines as small as 15 cm (6 in.) and are applicable in lines up to 230 m (750 ft) long (Foster and Sullivan, 1977). It is important that the type of bucket selected be based on the construction material of the pipe to be cleaned. A bucket designed for concrete sewer pipe, for example, may damage a plastic collection pipe.

Protocol

The power winches are set up at adjacent manholes, the pipe is threaded, and the bucket is pulled through the collection pipe to dislodge and collect materials. As with other maintenance procedures, the collected material should be inspected for evidence of failure or clogging mechanisms. If materials do indicate a problem, further investigation is warranted.

6.3 HYDRAULIC METHODS

6.3.1 Jetting

Discussion

High-pressure water cleaning is one of the most effective sewer-cleaning techniques. Water is pumped through a hose connected to a special nozzle which directs the high-pressure stream of water in several directions. Various nozzle designs are available, as shown in Figure 21. The force of the water is used both to propel the nozzle through the line and to dislodge materials which may have built up on the pipe. High-pressure jets can operate at pressures of 0 to 140,000 g/cm^2 (0 to 2000 psi).

Ford (1974) experimented with jet cleaning of plastic drains clogged with ochre in Florida. He found that high-pressure jets (84,000 g/cm^2 (1200 psi) at the pump) damaged the drainage layer by displacing drainage-layer material, and recommends low-pressure (e.g., 4900 g/cm^2; 70 psi) jetting. The drainage layers tested, however, were only about 5 cm (2 in.) thick. In addition, it was found that low-pressure jets were less effective than high-pressure systems for "more seriously clogged drains," and that low-pressure systems were somewhat more difficult to use (the nozzle is no longer self-propelled). Experience with jet cleaning of leachate collection systems is limited. Jetting has been shown to be effective in removing clogs from collection pipes, but the effect of high-pressure jets on the drainage layer should be considered in selecting the optimal cleaning pressure.

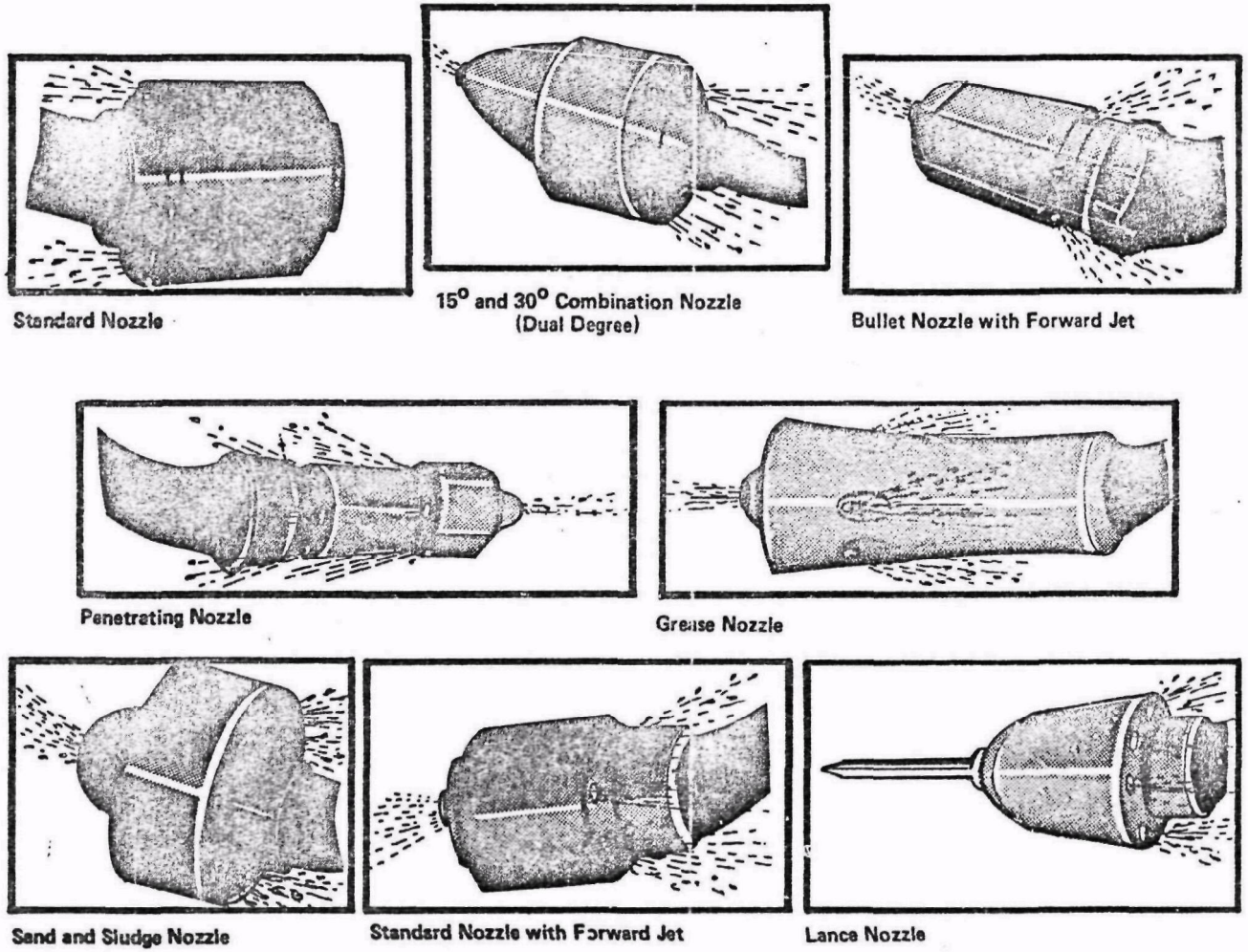

Figure 21. Nozzle designs for high-pressure cleaning.
(Source: W.S. Darley & Co., Melrose Park, IL.)

The main advantage of jet cleaning is that it is expected to be effective in removing most types of clogs and accumulated materials from the collection pipe. In addition, it is relatively easy to use, requiring minimal setup and access only at the downstream end of the pipe.

Limitations include the need for an accessible water supply and the potential of damaging the drainage layer. Jetting may also not be effective for large or heavy debris, or for mature iron deposits. A method to remove the debris flushed out by the jet is also needed. A vacuum truck, for example, is often used to remove debris accumulated in the downstream manhole.

Protocol

Jetting equipment is set up at the downstream access point of the collection pipe to be cleaned. Nozzle type and size, pump pressure, and rate of entry and withdrawal should be based on pipe size, length, and conditions expected. More thorough cleaning is accomplished at higher pressures and slower rate of entry and withdrawal. Thorough cleaning, however, is also more expensive since more time and more water are required.

The specific protocol used for jet cleaning will depend on the design of the system and on the capabilities of the cleaning equipment available. Typical maximum lengths of pipe which can be jet cleaned range from 90 to 300 m (300 to 1000 ft) at depths of about 15 m (50 ft). Jet cleaning service should be available from local sewer cleaning firms, and the equipment is available for purchase from a variety of manufacturers. (See Foster and Sullivan, 1977.)

6.3.2 Flushing

Discussion

Collection lines can be flushed using a hose connected to a fire hydrant or other water supply. Leachate can also be used if it does not contain a high sediment load. The action of a large quantity of liquid flowing through the pipe serves to remove loosely attached debris or sediments from the pipe. Various hydraulically propelled devices are also available to increase the effectiveness of this technique. These devices include sewer balls and hinged-disc cleaners (sewer scooters).

A sewer ball (Figure 22) is an inflatable rubberized ball attached to a cable which limits the cross-sectional area available for flow at a specific point in the pipe so that water flows around the ball at higher, more turbulent velocities. Use of the sewer ball increases the ability of the water to dislodge and flush away debris which has accumulated in the pipe. Sewer balls require a certain amount of operator skill for effective use and are available in sizes as small as 15 cm (6 in.).

A hinged-disc cleaner (Figure 23) provides the same function as a sewer ball, increasing the effectiveness of flushing. The machine is pushed through the pipe by the flushing water. When debris is encountered, the machine stops, causing water to accumulate in the pipe. The operator then pulls the cable to release the top half of the disc, allowing the accumulated water to flush away

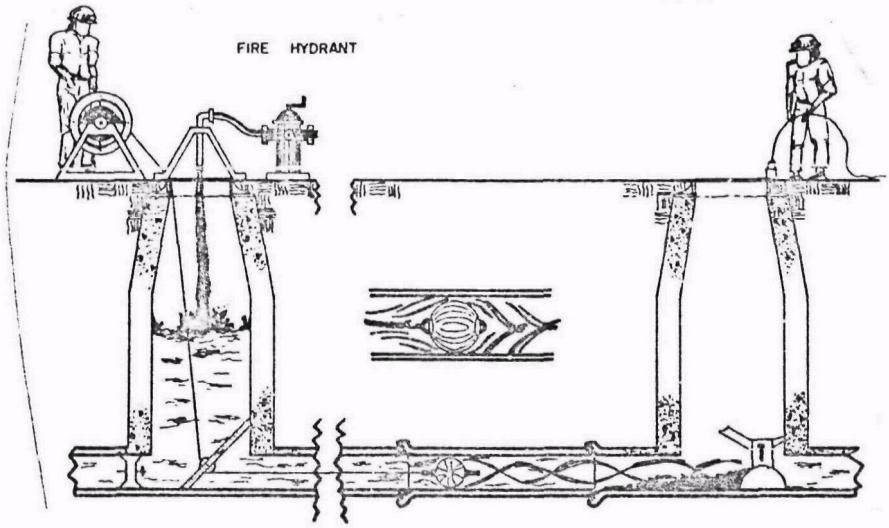

Figure 22. Sewer ball.
(Source: Water Pollution Control Federation: 1980)

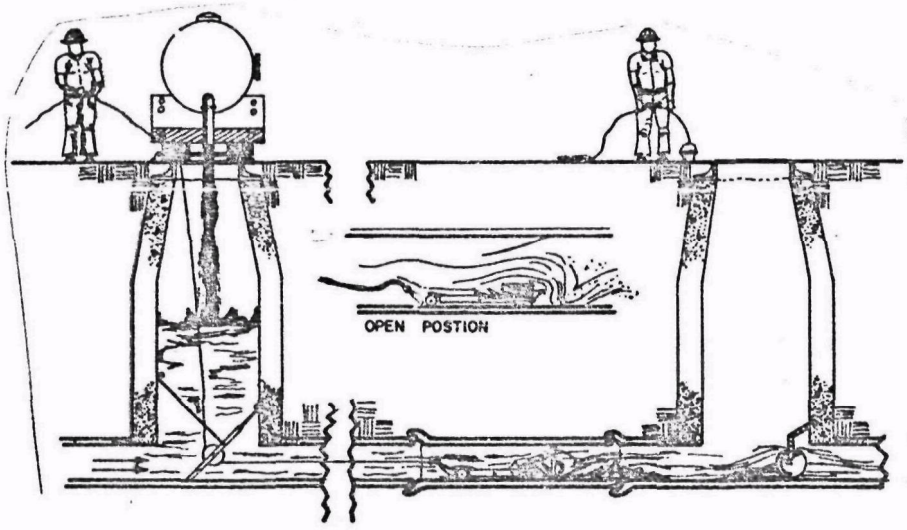

Figure 23. The hinged disc cleaner (or "scooter").
(Source: Water Pollution Control Federation: 1980)

the debris. The velocity of the water is generally three to four times the normal flow velocity, depending on the size of the pipe. The debris is washed downstream and can be removed through a manhole or clean-out.

Simple flushing requires access to at least the downgradient portion of the pipe to be maintained, and preferably access to both ends of the pipe. Access to both ends of the pipe is required when the sewer ball or hinged-disc cleaner is used. Flushing is simpler and less expensive than other maintenance measures, but may be less effective in removing debris attached to the pipe.

Protocol

Generally, flushing is accomplished by directing the source of water into the upgradient access point. Propelled devices are designed for use from a manhole, but flushing water may be added through a clean-out or riser pipe. Debris flushed out of the pipe is removed from the downgradient access point which has been plugged to capture debris but allow the water to pass through. (See Figure 23.)

7.0 REPAIR

7.1 INTRODUCTION

Leachate collection and cap drainage systems must be repaired when the mechanisms discussed in Section 2 cause the systems to fail. Failure occurs when the system becomes unable to remove leachate (or precipitation) and allows liquid to accumulate over the liner. Maintenance procedures are used to address failure mechanisms before actual failure of the system occurs. Repair procedures are used to correct the problem after it occurs, thus allowing liquid to be removed from over the liner.

Leachate collection and cap drainage systems can fail as a result of problems in the collection pipe, filter layer, drainage layer and other system components, including sumps and pumps. Problems with components of the system that are buried under the waste are of particular concern since access to these components is difficult. Evidence of system failure includes:

- no flow out of the system when flow is expected;
- high leachate levels in portions of the facility; and
- leachate ponding or seepage at the surface of the waste mass (or cap).

An investigation may be needed to gain an understanding of the cause of the problem before selecting the appropriate repair option. Locating and diagnosing problems are discussed in Section 5.3.3.

A variety of repair options are available to correct problems with failed leachate collection or cap drainage systems. The maintenance techniques described in Section 6 can be used as repair methods primarily for clogged collection pipe. Chemical methods may also be useful to remove (dissolve) material clogging a collection pipe and may be applicable to address clogging of the drainage or filter layer. Finally, the failed portion of the system can be replaced with a new system.

Selection of the appropriate repair option depends on a number of factors. Location of the problem influences the choice considerably. Some repair options, for example, are applicable only to the collection pipe and would not be of use for a clogged drainage layer. The type and extent of the problem are also important. Clogging of the drainage layer around the collection pipe, for example, might be addressed by chemical methods while chemical methods would not be applicable to extensive clogging of the drainage or filter layer away from the pipe. Also, the physical and chemical characteristics of the clogging material are important in determining the effectiveness of a repair option. In general, maintenance techniques and

chemical methods are applicable to problems in and around the immediate area of the collection pipe, and replacement techniques are required for problems away from the pipe area.

Landfill design and waste characteristics must also be considered in selecting the appropriate repair option. Maintenance techniques, for example, may not be the best option for a clogged collection pipe if access to the pipe was not provided in the landfill design. Similarly, excavation and replacement may depend on the number of lifts of waste which have been placed and how "dangerous" those wastes are (e.g., explosive, reactive, volatile, unknown composition).

This section addresses the three major categories of repair methods: maintenance techniques, chemical techniques and replacement techniques. This section does not address repair of components such as pumps and sumps which are not buried by the wastes. Standard construction and system maintenance techniques can be used for repair of these components.

In some cases, the effect of leachate collection system failure can be eliminated by significantly reducing leachate generation. This would be accomplished, for example, by closing the site with a final cover to control the water balance at the site. Decreasing the quantity of precipitation and groundwater flow, and increasing runoff, surface storage and evapotranspiration can also be used to reduce the quantity of water available for leachate generation at the site (Pacey and Karbinski, 1979). The discussion below assumes that leachate generation has been minimized and repair of the leachate collection system is required.

7.2 MAINTENANCE TECHNIQUES

Maintenance techniques which can be used for leachate collection system repair include:

- rodding;
- cable tool;
- buckets;
- jetting;
- flushing alone; and
- flushing with hydraulically propelled devices.

These techniques, described in Section 6, are applicable to collection pipes clogged with sediments, biological growth, chemical precipitates and biochemical precipitates. It is also necessary that sufficient access to the pipe be available through manholes or risers. Buckets additionally require that the pipe be able to be threaded, and is therefore not applicable to totally blocked pipes.

The information provided on these techniques in Section 6 is generally applicable for their use in system repair. One major difference is that more effort may be required to remove the material which has blocked the flow in the collection pipe than to remove material that has not yet accumulated significantly. This additional effort would increase the cost of the operation since it would take longer to clean a section of pipe. Several

techniques may also need to be tried before the clog is successfully removed. Care should be taken to ensure that the techniques tried do not damage the collection pipe. It is likely that the equipment operator will be most experienced with sewer cleaning and may not fully appreciate the differences between plastic and concrete pipe. It is up to the facility operator to make sure that a difficult clog is not attacked so aggressively that the collection pipe is damaged. This may require the use of tools specially designed for plastic pipe, or lower water pressures for jetting even though different tools or higher pressures may be more effective in removing the clog.

The expected success of maintenance techniques as repair methods will vary with the nature of the clog. Some clogs may be quite difficult if not impossible to remove, while others may be removed quite easily. The expected success of the technique will depend not only on the type of clog but also on its location and extent. Clogs which extend only a few centimeters are likely to be easier to remove than a similar clog which extends several meters. In one example from Section 2, biological material filled a 30 m (100 ft) section of pipe. The clog was removed by flushing with water under high pressure. Although the facility owner was concerned that the pressure might damage the pipe, the clog was successfully removed. In addition, clogs which are near an access point would be easier to remove than clogs which are midway between two access points, since the effectiveness of most techniques diminishes with distance from the access point.

7.3 CHEMICAL TECHNIQUES

Various chemicals have been used or tested for the cleaning of sewers, agricultural drainage systems, and septic drain fields. Commercially available biocides, enzymes, bacterial cultures, caustics, hydroxides and neutralizers can be used to remove grease deposits from sewer lines. Sulfur dioxide gas, dry pelletized sulfamic acid and liquid acids have been shown to be effective in removing mineral deposits and organic material from agricultural drain lines. Also, a method using hydrogen peroxide has been developed to clean septic drain fields which have been clogged with organic material. Chemical treatment is particularly important since it is applicable to mineral deposits, such as iron precipitates, which may be difficult to remove by other methods.

Discussion

Chemicals which have been used to dissolve clogs in drain lines and well points include hydrochloric acid, sulfamic acid, hydroxyacetic acid, hydrochloric acid with ammonium chloride, and sulfur dioxide gas (Grass and McKenzie, 1970). Sulfur dioxide gas and dry pelletized sulfamic acid are considered the most promising chemicals for acid treatment since they can be handled more easily and safely and have provided excellent results.

Acid treatment is applicable to iron deposits, manganese deposits, calcium carbonate incrustation, organic deposits and other materials which dissolve readily in acid. It is useful primarily for clogs in the pipe or pipe slots. Treatment, however, may also extend into the drainage layer immediately around the pipe.

The acid treatment techniques presented below were developed for use with agricultural drainage systems. Special care should be taken in applying these techniques to hazardous waste leachate collection systems. Compatibility of the acid with the pipe material, liner material and waste materials present should be carefully evaluated. Acid treatment should be used only in cells which are designed to handle low pH waste.

Protocol

The protocol for acid treatment has been derived from the protocol used for agricultural drainage systems as discussed in Grass and McKenzie (1970) and Lidster and Ford (undated).

The first step in acid treating a collection line is to clean the line by flushing or with a high-pressure jet. This serves to remove any silt or deposits which are not strongly adhered to the pipe and allows the acid to work only on the materials which are most difficult to remove. Once the pipe is cleaned, acid is introduced into the upgradient end of the pipe. When the acid reaches the downgradient end of the pipe, the downgradient end is plugged so that acid will accumulate in the pipe. For sulfur dioxide treatment, SO_2 gas and water are injected together into the pipe. The amount of water and gas used depends on the pipe size and the length of the lines. Table 19 shows the quantities of SO_2 and water for treatment of various diameter drain lines per 30 m (100 ft) length. SO_2 gas is injected from a tank through a hose extending to the bottom of the riser or manhole. Water is pumped into the drain through a hose which terminates just below the top of the riser or manhole. The tank weight is measured to determine the rate of gas flow, which is adjusted to the amount of water being pumped into the pipe to maintain a 2% solution by weight of SO_2. Water pumping rates vary between 150 and 280 liters per minute (40 and 75 gallons per minute) using 2-5 kg (5-10 lbs) of SO_2 gas per minute. Flow rates from the tank vary with temperature and with the volume of gas remaining in the tank. Nitrogen can be injected into the tank to maintain pressure at a constant flow rate of gas.

The acid solution is held in the line for up to several days if possible. Depending on the amount of clogging in the drainage layer it may be difficult to hold the acid in a leachate collection pipe since the pipe is slotted. Best results would likely be obtained when the liquid level in the leachate collection system is at the bottom of the pipe. Leachate in the area above the clog may need to be dewatered for acid treatment to be effective. Alternatively, addition of water or waiting until the collection system is saturated may be necessary if the leachate collection system is dry. The pH of the liquid in the pipe can be measured to determine the progress of the treatment. Treatment is finished when the pH in the pipe approaches that of the leachate prior to treatment. When the treatment is finished, the plug at the downgradient end of the pipe is removed to allow the leachate to drain from the pipe. The pipe is then flushed or jetted to remove deposits which are only partially dissolved or loosened as a result of the acid treatment.

Safety in handling the chemicals is a major concern in acid treatment. The primary health hazards are from inhalation of SO_2 vapors and direct contact with liquid acid. Pumping rates should be adjusted so that the acid does not overflow from the riser pipe during injection, and all contact with

TABLE 19

QUANTITIES OF SO_2 AND WATER FOR TREATMENT OF VARIOUS SIZES OF TILE DRAINS*

Tile Diameter (in.)	3	4	5	6	8	10	12
Pounds of SO_2 per 100 ft	6	11	17	24	44	68	98
Gallons of Water per 100 ft	37	65	102	147	261	408	588

* 2% SO_2 solution: 1 lb SO_2 per 6 gal water.

1 inch = 2.54 cm

1 gallon = 3.785 liters

Source: Grass and McKenzie, 1972.

acid should be avoided. Personnel should be aware of proper handling procedures for the SO_2 gas and of safety precautions in conducting the acid treatment.

Acid treatment has been successful in removing iron and manganese deposits from tile drains in agricultural systems. Results of testing by Grass and McKenzie (1970) are given in Table 20. Experience with SO_2 treatment in Imperial Valley, California, conducted by Grass and McKenzie, indicate a 2- to 250-fold increase in flow rate depending on the severity of the clog in the system. Dennis (1978) reports an example of an iron clog which was not corrected either by conventional cleaning techniques, such as drain rodding or water jetting, or by sulfur dioxide treatment. The expected success of acid treatment for leachate collection systems will depend primarily on the type and extent of the clog and the ability of the acid to maintain contact with the clogged portion for an extended time. Acid treatment, therefore, may be most effective when the drainage area beneath the pipe is also clogged and may be less effective when only the pipe itself is clogged.

Additional research is needed to adapt the procedures developed for agricultural drainage systems to leachate collection systems.

7.4 REPLACEMENT TECHNIQUES

Two categories of replacement techniques are discussed in this section. The first category includes those techniques which repair, modify, or replace components of an existing leachate collection system, or retrofit a new conventional leachate collection system at a facility which previously had none. A conventional leachate collection system includes any drainage system which would be placed beneath or within the waste mass at a new facility to collect leachate. Typical leachate collection system designs are discussed in Section 3. The second category of replacement techniques involves using alternative systems to remove leachate from a facility where a conventional leachate collection system has failed or was never installed. Alternative systems include peripheral toe drains and caissons or wells installed through the waste.

Replacement techniques may be required to control leachate in a facility under a variety of circumstances including:

- a severely clogged section of collection pipe which cannot be cleaned by conventional sewer-cleaning techniques;
- extensive clogging in the drainage layer;
- extensive clogging in the filter layer;
- a poorly designed leachate collection system including inadequate access to pipes and insufficient system capacity;
- operational errors including impermeable waste material which causes ponding of leachate within the waste mass;

TABLE 20

THE SOLUBILITY OF IRON AND MANGANESE TILE DEPOSITS IN VARIOUS CHEMICAL REAGENTS*

Solvent	Amount Dissolved (%) Manganese Deposit	Iron Deposit	Average (%)
3.7% HCl + 2% $Na_2S_2O_5$	100	100	100.0
4.9% H_2SO_4 + 2% $Na_2S_2O_5$**	83	98	90.5
4.9% H_2SO_4 + 1% $Na_2S_2O_5$	57	96	76.5
4.9% H_2SO_4 + 1% Oxalic Acid	56	94	75.0
2.5% H_2SO_4 + 2% $Na_2S_2O_5$**	81	52	66.5
1.8% HCl + 1% $Na_2S_2O_5$	63	66	64.5
4.9% H_2SO_4 + 0.5% Oxalic Acid	38	89	63.5
10% Hydroxyacetic Acid	66	61	63.5
2.5% H_2SO_4 + 1% Oxalic Acid	51	56	53.5
2.5% H_2SO_4 + 1% $Na_2S_2O_5$	56	51	53.0
10% Sulfamic Acid	-	53	53.0
2.5% H_2SO_4 + 0.5% Oxalic Acid	29	43	36.0
4% Sulfamic Acid***	20	-	20.0

*1gm of deposit in 20 ml of solution.
**Equivalent to SO_2 gas.
***Above 4% concentration amount dissolved remained unchanged.

Source: Grass and McKenzie, 1970.

- construction errors including crushed collection pipe or failing to install an important system component such as a filter layer;

- differential settling that causes ponding of leachate over the liner.

Any of these problems can lead to high leachate levels or leachate seepage out of the waste mass.

Experience with replacement techniques for leachate collection systems is limited to older facilities which either did not initially have leachate collection systems or used state-of-the-art designs which have since been superceded. Replacement techniques were used at these facilities to control leachate problems which developed and/or to meet RCRA standards for landfill design. Experience with these older facilities is applicable to RCRA-designed facilities as well since the same techniques would be used when repair is required. The primary difference is that excavating through hazardous waste, especially where drummed wastes are present, is more complicated and more hazardous than drilling or excavating through refuse or homogeneous wastes.

The need for replacement techniques at RCRA facilities will likely be less than at older facilities because of the more sophisticated practices used and the measures to reduce leachate production (e.g., not accepting liquid wastes). However, replacement techniques may be required at RCRA facilities for the reasons described above. Construction errors, for example, can occur at any type of facility no matter what the design is. In addition, RCRA facilities as yet employ no standardized leachate collection system design so design features will vary. Providing access to the collection pipes, for example, is not required by RCRA and is not a feature in several recently designed facilities. Furthermore, unforeseen problems could develop with certain unproven technologies currently used in leachate collection systems. An example of this is the use of geotextile drainage or filter layers since the potential for clogging of these layers is unknown. Some design firms use geotextile materials as common practice. Others deem it wise to avoid them at this time. The potential for clogging of geotextile, however, does exist and would require replacement as a corrective measure.

The following sections discuss replacement techniques for leachate collection systems. Examples are given of six facilities which have used these techniques to correct problems with their leachate collection systems.

7.4.1 Conventional Systems

Replacement techniques which are based on conventional leachate collection system design include repairing failed portions in-place, modifying the existing leachate collection system with features not included in the original design, replacing failed portions of the leachate collection system with new components, and installing a new leachate collection system where there was none before. All these methods involve excavating through the waste to gain access to the leachate collection system or the bottom of the waste. The usefulness of these methods therefore will depend to a large extent on the thickness of the in-place waste, the availability of information about the in-place waste, and the characteristics of the in-place waste. Excavating

through one lift of hazardous material is less complicated than excavating through several lifts, and excavating through a monofil of bulk material is less complicated than excavating through a mix of bulk wastes and drummed material. These factors affect the hazard involved in excavation and significantly affect the cost of the operation.

Repair or replacement of the existing leachate collection systems may be required when the problem cannot be corrected by other means. This may include fixing or replacing broken or badly clogged leachate collection pipes or portions of the drainage layer or filter layer. It also might include correcting construction errors such as placing a collection pipe, drainage or filter layer where one should have been installed.

Excavation can also be used in modifying the existing system. For example, manholes or risers can be added at collection pipe intersections or at the end of collection pipes where access is not provided. This would allow cleanout, inspection or repair of the pipe by more conventional means. It would also be possible to add new lines or connections to augment functioning of the existing leachate collection system. Alternatively, excavation can be used to install a new leachate collection system where there was none before.

The use of replacement techniques based on conventional leachate collection systems is illustrated by the following examples.

Seven Mile Creek Landfill

The Seven Mile Creek Landfill is a sanitary landfill in Eau Claire, Wisconsin. According to a letter sent to the City of Eau Claire from the Department of Natural Resources (Murray, 1980), the City had agreed to check the collection lines at the Seven Mile Creek Landfill to determine whether any sections of pipe were damaged. The City sewer crew therefore rodded a section of pipe to 35 m (116 ft) from the collection tank and hit an obstruction. This obstruction was thought to be a 45 degree elbow which the rod could not pass through. A month later the area where the elbow was located was excavated and a manhole installed to facilitate cleaning the 244 m (800 ft) run out into the fill area. The sewer crew then jetted the line to an obstruction approximately 15 m (50 ft) west of the elbow where the manhole was installed. A piece of ABS pipe was found which indicated a possible break in the line.

The garbage was then excavated in this area and a break was found between the east sidewall slope and the collection tee. A 3 m (10 ft) section of 15 cm (6 in.) ABS pipe was replaced. The area around the pipe was backfilled with gravel using No. 60 rolled roofing between the gravel and clay and mounded approximately 0.6 m (2 ft) of gravel over the pipe. Garbage was then pushed back into the hole. The cause of the break could not be determined at the time of excavation.

Maryland Chrome Ore Tailings Landfill (excerpted from MEESA, 1984)

Old chrome ore tailing cells were retrofitted with leachate collection systems at a site in Maryland for leachate removal and reuse by the generator.

Initially, the owner attempted horizontal drilling into the cells. This method proved unsuccessful because of difficulties and delays in drilling through the sandy tailings which tend to cement together over time. Leachate collection systems were finally installed by open cut trenching and laying a PVC pipe. Prior to the installation of the leachate collection system, borings indicated a 2-3 m (5-10 ft) leachate head in the old tailing cells.

Each leachate collection system consisted of a single PVC pipe header and lateral collection pipes. The laterals are 15 cm (6 in.) diameter perforated PVC pipe placed at the bottom of 1 m (3 ft) wide trenches which are excavated to the bottom of the cell. The bottom meter (3 ft) of each trench was then filled with crushed stone which was encased with a Mirafi 140 geotextile. Chrome tailings waste was then placed on top of the geotextile to fill up the trench. There are three trenches containing laterals in Area 5 and 14 trenches in Area 3. The trenches in Area 3 vary in length from 32 m (106 ft) to 79 m (260 ft). The three trenches in Area 5 are approximately 24 m (80 ft), 47 m (155 ft) and 61 m (200 ft) in length. The collected leachates flow by gravity to a sump. The sump pumps transfer the leachate to storage tanks.

Problems during construction of these systems included (1) trenching through cemented tailings in several areas; and (2) exposure of excavated tailings to rain.

Manholes were provided outside the cells on the main collection header at all bends and junctions and at spacing not greater than 122 m (400 ft). This allows closed-circuit television monitoring of the condition of the pipe, cleaning and to a limited extent physical repairs to be made to the pipe without excavation.

7.4.2 Alternative Systems

Alternative methods of leachate control are needed when it is impractical or impossible to excavate through the waste mass to replace or repair the leachate collection system or install a new system. Alternative methods include installing toe drains at the periphery of the cell and drilling caissons or wells through the waste to pump out leachate.

Toe drains are french drains typically installed at the base of the landfill. Toe drains are used to control problems with leachate seepage, and they also provide a means to retrofit a leachate collection system at a facility without excavating through the waste.

Caissons or wells can be installed through the waste at a facility to allow removal of leachate. Caissons are simply large diameter wells. They can be installed at low spots in the waste cell to collect leachate which can flow, or in areas of ponded leachate. The effectiveness of the caisson or well is limited by the ability of the leachate to flow to the well. Special care must be taken in installing a caisson or well through hazardous waste, especially if drummed materials are present. In addition, care must be taken to avoid drilling the caisson or well through the liner.

The following examples illustrate the use of toe drains, caissons and wells as repair methods for leachate collection systems.

Western Lake Superior Sanitary District Landfill (Knight et al., 1983)

The Western Lake Superior Sanitary District purchased a co-disposal landfill in 1979 which was having significant environmental problems because of leachate generation. Leachate was migrating to a nearby creek through seepage at the toe of the fill area and to groundwater contamination beneath the fill area. A toe drain was therefore designed to capture both the toe seeps and the contaminated groundwater.

The toe drain design is shown in Figure 24. The drain was designed to prevent surface water from infiltrating into the drain and causing increased treatment costs. Care was taken during construction to provide a 1 m (3 ft) interface of the sand filter with the refuse to control seepage at the toe of the fill. In addition, the drain was placed at the depth required to control the contaminated groundwater and collect the flow of groundwater from both sides.

Since no records were available about the type of waste disposed of at the facility over the years, special consideration was given to safety during construction of the toe drain.

Surface-water monitoring data for the creek, data for groundwater along the line of the drain, and leachate sampling data indicate that the collection system is performing as designed. Flow rates vary seasonally from 76 to 265 liters per minute (20 to 70 gallons per minute). The system had been in operation for 2 years in 1983.

Omega Hills Landfill (Personal Interview, Mark Gordon, 1984)

The Omega Hills landfill was the largest hazardous waste disposal site in Wisconsin. It was originally designed as a co-disposal site, accepting municipal, liquid and hazardous wastes. The facility was designed as a zone of saturation landfill, which depended on the pumping of leachate to maintain groundwater gradients toward the landfill.

The State regulators became concerned when they began to balance the quantity of liquids being delivered to the landfill against the leachate being pumped out. This concern, combined with general uneasiness about the extent and quality of groundwater monitoring, was sufficient to initiate an investigation at the site. A number of leachate head wells were drilled into the waste, and it was discovered that there was considerable leachate at the site, in some areas 9-12 m (30-40 ft) above the bottom of the waste. Further investigations indicated that the clay was not homogeneous. Around the site were sand seams that allowed leachate to migrate beyond the landfill border. It was also found that the stone-filled sump was clogged with silt, making it difficult to pump leachate out of the sump.

At this point, the State terminated all hazardous and liquid waste disposal at the facility. Approximately three years of municipal solid waste capacity remains at the site. The disposal of municipal waste has continued in an effort to help achieve a final grade which will reduce infiltration and leachate generation at the site.

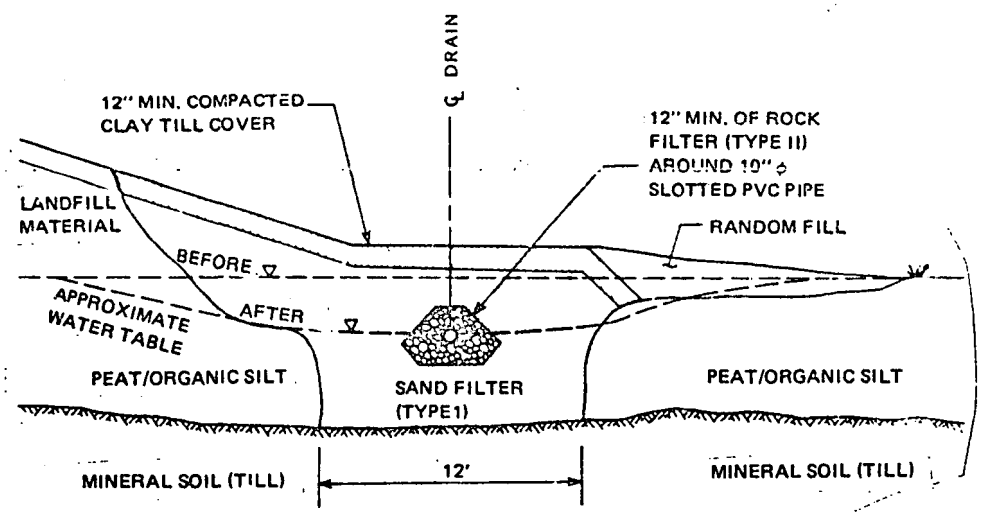

Figure 24. Toe drain design.
(Source: Knight et al, 1983.)

The owner has been involved in a $10-14 million cleanup, consisting of the following elements:

- Construction of a leachate pretreatment facility to reduce the BOD of the leachate by 70-80%. Prior to pretreatment the average leachate BOD is approximately 30,000 ppm. Prior to construction of the pretreatment facility, leachate was trucked directly to the Milwaukee Metropolitan Sanitary District for treatment. However, because of limited capacity at the POTW, only about 45,000 liters (12,000 gallons) of the high-BOD leachate could be trucked from the landfill per day. This restriction on leachate disposal adversely affected the operation of the facility.

- Removal of waste around the perimeter and construction of new side walls as a barrier for leachate migration beyond the site. The side walls are 30 cm (12 in.) clay cutoff walls with a 2 m (5 ft) toe.

- A perimeter leachate collection system was installed in conjunction with the clay cutoff wall. This installation is at approximately the same elevation as the bottom limits of waste, and at an elevation similar to that of the existing leachate collection system. Wherever possible, piping from the old leachate collection system was interconnected with the new system.

- PVC risers have been replaced with 2 m (6 ft) diameter steel manholes. In the initial design, PVC slanted risers were to provide access to the leachate collection system. This design proved inadequate because the PVC could be crushed or distorted during the settling of the waste, and there was inadequate sump at the terminus of the risers to permit adequate pumping at these points in the collection system.

- Cleaning of leachate collection lines using a water jet.

California Co-Disposal Facility (MEESA, 1984)

Clogging, apparently the result of chemical deposition and solidification, was a recurring problem at a co-disposal landfill in California. About one-third of the waste disposed of at the facility was hazardous and about one-third was liquid waste. The clogging was very non-systematic and occurred only in certain locations while other areas within the same cell performed satisfactorily. Corrective measures included total replacement of sections of the leachate collection system. The collection system consisted of a series of well points and headers which had been installed after waste placement to control leachate. When the well points clogged they were removed from the waste, and new well points were installed (Personal Interview, J. Johnson, 1984).

Maryland Landfill (MEESA, 1984)

This landfill initially was constructed without a leachate collection system. Completed cells at the landfill, however, were retrofitted with a leachate collection system in order to facilitate leachate collection and

removal. Standpipe wells were drilled at the low points in the cells and subsequently backfilled with drain rock. Leachate flows through the waste to the wells and is pumped out. The standpipe depths range from 12-24 m (40-80 ft). Because of the large size of the cells, the effectiveness of the leachate collection system is low. It was also considered prohibitively costly to excavate trenches through the waste to place leachate collection lines and to install additional leachate standpipes to enhance removal. Further, the drainage material surrounding the standpipes that were installed is filling with sediment and is expected to eventually clog the system.

REFERENCES

American Society for Testing Materials (ASTM). "Soil and Rock; Building Stones." 1982 Annual Book of ASTM Standards, Part 19, 1982.

Avnimelech Y. and Z. Nevo. "Biological Clogging of Sands." Soil Sci., 98:222-6, 1964.

Baron D.M. "A Well System can be Designed to Minimize the Incrusting Tendency". The Johnson Driller's Journal. First Quarter, 1982. pp. 8-11.

Bass, J.M., J.R. Ehrenfeld, N.J. Valentine. "Potential Clogging of Landfill Drainage Systems." U.S. EPA, Municipal Environmental Research Laboratory, Cincinnati, OH. EPA-600/2-83-1090, 1984.

Bear, J. Dynamics of Fluids in Porous Media. American-Elsevier Publishing Co., New York, 1972.

Bolz, R.E., and G.L. Tuve. Handbook of Tables for Applied Engineering Science, "Properties of Commercial Plastics." 2nd Edition, CRC Press, 1976.

Canada Centre for Mineral and Energy Technology (CANMET). "Pit Slope Manual," Chapter 9, CANMET REPORT 77-1; January 1977.

Carroll, Robert G., Jr. "Geotextile Filter Criteria." Engineering Fabrics in Transportation Construction. Transportation Research Record 916, National Academy of Sciences, Washington, D.C., 1983.

Cedergren H.R. Seepage, Drainage and Flow Nets. John Wiley and Sons, 1977.

Celanese Fibers Marketing Company. "Test Procedure for Falling Head Water Permeability of Geotextiles." CFMC-FFET-1, New York, August, 1981.

Chen, Y.H., D.B. Simons, P.M. Demery. "Laboratory Testing of Plastic Filters," Vol. 107, No. 1R3, Proceedings of the ASCE, Journal of the Irrigation & Drainage Division. September, 1981.

Dennis, C.W. "The Failure of a Pipe Drainage System in an Organic Soil and Subsequent Remedial Measures." Land Drainage Service., Field Drainage Experimental Unit, Technical Report 78/3. November, 1978, pp. 1-12.

Environmental Protection Agency (EPA). "Minimum Technology Guidance on Double Liner Systems for Landfills and Surface Impoundments - Design, Construction and Operation," Draft, EPA/530-SW-85-014. 24 May 1985a.

Environmental Protection Agency. "Construction Quality Assurance for Hazardous Waste Land Disposal Facilities - Public Comment Draft" Office of Solid Waste and Emergency Response, Washington, D.C. and Hazardous Waste Environmental Research Laboratory, Cincinnati, OH. EPA/530-SW-85-021. October 1985b.

Environmental Protection Agency. EPA Version 2 of the Landfill Data, Westat Data Base. Output prepared by DPRA, Inc. For Marlene Suit. 17 November 1983a.

Environmental Protection Agency. "Lining of Waste Impoundment and Disposal Facilities." Office of Solid Waste and Emergency Response, Washington, D.C. SW-870. March, 1983b.

Environmental Protection Agency. "Draft RCRA Guidance Document for Landfill Design-Liner Systems and Final Cover." Office of Solid Waste July, 1982

Fenn, D., E. Cocozza, J. Ibister, O. Braids, B. Yare and P. Ronx. "Procedures Manual for Groundwater Monitoring at Solid Waste Disposal Facilities." EPA 530/SW-611. August, 1977.

Ford H. W. "The Problem of Clogging in Low Volume Irrigation Systems and Methods for Control." Paper presented at the Symposium on Drip Irrigation in Horiculture with Foreign Experts Participating. Skierniewice, Poland. October, 1980.

Ford H.W. "Characteristics of Slime and Ochre in Drainage and Irrigation Systems." Transactions of the American Society of Agricultural Engineers. Volume 22, No. 5, 1979. pp. 1093-1096.

Ford H.W. "Low Pressure Jet Cleaning of Plastic Drains in Sandy Soil." Transactions of the ASAE. 1974, 17(5):895-897.

Foster W.S. and R.H. Sullivan. "Sewer Infiltration and Inflow Control Product and Equipment Guide." American Public Works Association, Chicago, IL. Prepared for USEPA, Municipal Environmental Research Laboratory, Cincinnati, OH. EPA-60012-77-017c. July, 1977.

Gee, J.R. "The Prediction of Leachate Generation in Landfills - A New Method." Municipal and Industrial Waste, 6th Annual Madison Conference, University of Wisconsin - Extension, Madison, WI. September, 1983.

Ghassemi M., S. Quinlivan, M. Haro, J. Metzger, L. Scinto and H. White, "Compilation of Hazardous Waste Leachate Data." U.S. Environmental Protection Agency, Office of Solid Waste, Washington, DC April, 1983.

Giroud, J.P. "Filter Criteria for Geotextiles". Procedings of the Second International Conference in Geotextiles, Vol. 1, Las Vegas. August, 1982. pp103-108.

Giroud, J.P. "Designing with Geotextiles". Materiaux et Constructions, Vol. 14, No. 82. July/August, 1981.

Grass L.B., and A.J. MacKenzie. "Reclamation of Tile Drains by Sulphur Dioxide Treatment." Sulphur Institute J., Vol. 6(1), pp. 8-13, Spring, 1970.

Grim, R.E. Clay Mineralogy. McGraw-Hill, Inc., New York, 1953.

Haliburton, T.A. and P.E. Wood. "Evaluation of the U.S. Army Corps of Engineers Gradient Ratio Test for Geotextile Performance." Proceedings of the Second International Conference on Geotextiles, Vol. 1, August, 1982.

Hammer M.J. Water and Waste-water Technology. John Wiley and Sons, Inc., New York, 1975.

Harr, M.E. Groundwater and Seepage. McGraw-Hill, Inc., New York, 1962.

Haxo, H.E. "Lining of Waste Impoundment and Disposal Facilities." U.S. EPA SW-870, March, 1983.

Hoare, D.J. "Synthetic Fabrics as Soil Filters: A Review." Journal of the Geotechnical Engineering Division; ASCE Vol. 108, No. GT10, October, 1982.

Horz, R.C. "Geotextiles for Drainage and Erosion Control at Hazardous Waste Landfills." EPA Interagency Agreement No. AD-96-F-1-400-1. U.S. EPA, Cincinnati, Ohio. 1984

Kmet, Peter. "EPA;s 1975 Water Balance Method - Its Use and Limitations." Bureau of Solid Waste Management, Wisconsin Department of Natural Resources. October, 1982.

Knight S.K., L.R. Molsather and M.D. Bonnell. "Retrofitting an Existing Sanitary Landfill with a Leachate Collection System: A Case Study." in the Sixth Annual Madison Conference of Applied Research and Practice on Municipal and Industrial Waste. University of Wisconsin- Extension, Madison, WI. September 14-15, 1983.

Kobayashi, Hester, and B.E. Rittmann. "Microbial Removal of Hazardous Organic Compounds." Environmental Science Technology, 1982. 16(3):170A-183A.

Koerner, Robert M., and T.P. Welsh. Construction and Geotechnical Engineering Using Synthetic Fabrics. John Wiley and Sons, New York, 1980.

Kristiansen, R. "Sand Filter Trenches for Purification of Septic Tank Effluent: I The Clogging Mechanism and Soil Physical Environment." J. Environ. Quality, 1981, 10:53-64.

Kuntze H. "Iron Clogging: Diagnosis and Therapy," in Proceedings of International Drainage Workshop, pp. 452-67, May 16-20, 1978.

Lawson, C.R. "Filter Criteria for Geotextile: Relevance and Use." Journal of the Geotechnical Engineering Division; ASCE Vol. 108, No. GT10, October, 1982.

Lidster W.A., and H.W. Ford. "Rehabilatation of Ochre-(Iron) Clogged Agricultural Drains." International Commission on Irrigation and Drainage. Eleventh Congress. Q. 36, pp. 451-463. (undated).

Luthin, J.N. and A. Haig. "Some Factors Affecting Flow into Drain Pipes". Hilgardia, A. Journal of Agricultural Science, The California Agricultural Experiment Station, Vol. 41, No. 10. 1972, pp. 235-245

Lutton, R.J., G.L. Regan and L.W. Jones. "Design and Construction of Covers for Solid Waste Landfills" USEPA, Office of Research and Development, Cincinnati, OH. EPA-600/2-79-165. August, 1979.

McBean, E.A., R. Poland, F.A. Rovers and A.J. Crutcher. "Leachate Collection Design for Containment Landfills" J. of Environmental Engineering, ASCE Vol. 108, No. EE1. February , 1982.

MEESA. "Corrective and Preventive Measures for Hazardous Waste Landfills and Surface Impoundments" U.S. Environmental Protection Agency, Office of Research and Development. Draft, September, 1984.

Mohammad, S. F. and R. W. Skaggs. "Drain Tube Opening Effects on Drain Inflow". Journal of Irrigation and Drainage Engineering, Vol. 109, No. 4. December 1983, pp. 393-404.

Moore, C.A. "Landfill and Surface Impoundment Performance Evaluation". Municipal Environmental Research Laboratory, Cincinnati, OH. SW-869. April, 1980.

Murray G.C. Solid Waste Superintendent, City of Eu Claire, WI. Letter to P. Kmet, WI Department of Natural Resources. File No. C.P.11-14-CT-21. January 25, 1980.

Nutting, P.E. "The Action of Some Aqueous Solution in Clays of the Montmerillonite Group." Prof. Paper 197F. U.S. Geological Survey, 1984.

Pacey J. and G. Karpinski. "Retrofitting Existing Landfills to Meet RCRA Standards for Leachate Control" in Solid Wastes Management/RRJ. February, 1979.

Peck, R.B., W.E. Hanson, and T.H. Thornburn. Foundation Engineering. Kiley, New York, 1974.

Perrier, E.R. and A.C. Gibson. "Hydrologic Simulation on Solid Waste Disposal Sites." Municipal Environmental Research Laboratory, Cincinnati, OH. SW-868, September, 1982.

Schroeder, P.R., A.C. Gibson, and M.D. Smolen. "The Hydrologic Evaluation of Landfill Performance (HELP) Model." Municipal Environmental Research Laboratory, Cincinnati, OH. EPA/530-SW-84-009, June, 1984.

Sherard, J.L., L.P. Dunnigan, and J.R. Talbot. "Basic Properties of Sand and Gravel Filters." Journal of the Geotechnical Engineering Division, ASCE, Vol. 110, No. 6, June, 1984a.

Sherard, J.L., L.P. Dunnigan, and J.R. Talbot. "Filters for Silts and Clays." Journal of the Geotechnical Engineering Division, ASCE, Vol. 110, No. 6, June, 1984b.

Shuckrow, A.J., A.P. Pajak and J.W. Osheka. "Concentration Technologies for Hazardous Aqueous Waste Treatment." EPA-600/2-81-019. U.S. Environmental Protection Agency. Cincinnati, OH, 1981.

Shuckrow, A.J., A.P. Pajack and C.J. Touhill. "Management of Hazardous Waste Leachate." Municipal Environmental Research Laboratory, Cincinnati, OH. SW-871, September, 1982.

Skaggs, R.W. "Effect of Drain Tube Openings on Water Table Drawdown". Journal of Irrigation and Drainage Engineering, Vol. 104. 1978, pp. 13-21.

Smith R.A., Chairman. "Operation and Maintenance of Irrigation and Drainage Systems: Section IV-Maintenance," in J. Irrigation and Drainage Division, ASCE by Committee on Operation and Maintenance of Irrigation and Drainage Systems. Vol. 102, No. IR1, March, 1976.

Spigolon, S.J. and M.F. Kelley. "Geotechnical Assurance of Construction of Disposal Facilities." Interagency Agreement No. AD-96-F-2-A077. USEPA, Municipal Environmental Research Laboratory, Cincinnati, OH. EPA 600/2-84-040, 1984.

Terzaghi, K. and R.B. Peck. Soil Mechanics in Engineering Practice. Wiley, New York, 1967.

Tratnyek, J.T., P.O. Costas, and W.J. Lyman. "Test Methods for Determining the Chemical Waste Compatibility of Synthetic Liners". U.S. EPA, Office of Research and Development, Cincinnati, OH. August, 1984.

U.S. Army Corps of Engineers. "Drainage and Erosion Control - Substance Drainage Facilities for Airfields." Part XIII, Chapter 2, Engineering Manual, Military Construction, Washington, D.C., June 1955.

U.S. Bureau of Reclamation (USBR). Drainage Manual. U.S. Government Printing Office, Washington, D.C., 1978.

U.S. Bureau of Reclamation. Design of Small Dams. U.S. Government, Printing Office, Washington, D.C., 1977.

W.S. Darley & Co., Melrose Park, IL. Product brochures.

Water Pollution Control Federation. "Operation and Maintenance of Wastewater Collection Systems." Task Force on Sanitary Sewer Maintenance. Moore and Moree Lithographers, Washington, D.C., 1980.

Young, C.W., T.J. Nummo, M.P. Jasinksi, D.R. Cogley and S.V. Capone. "Clogging of Leachate Collection Systems Used in Hazardous Waste Disposal Facilities." Draft White Paper, prepared for U.S. EPA, Research Triangle Park, North Carolina. June, 1982.

Personal Interviews

Bander Stal, Louis. Cascade Resource Recovery, Kent City, MI. October, 1983.

Bross, Jeffrey. Deerfield Associates, D.E. October, 1983.

Gordon, Mark. WI Department of Natural Resources. Madison, WI. November, 1984.

Johnson, J. Lockman Associates, CA., November, 1984.

Kmet, Peter. WI Department of Natural Resources, Madison, WI. October, 1983.

Koch, Hank. Chemical Waste Management, Inc. Milwaukee, WI. November, 1983 and November, 1984.

Kolberg, Dan. Warzyn Engineers, Madison, WI. October, 1983.

Melia, Greg. CECOS, OH. October, 1983.

Nichols, David. Residual Management Technology, Inc., WI. November, 1983.

Pacey, John. Emcon Associates, CA. November, 1983.

Patterson, John. Emtek, Inc., Amherst, New Hampshire. December, 1984.

Peluso, Rich. Wehran Engineerings, Middleton, NY. November, 1983.

Perpich, Bill. STS Consultants, Green Bay, WI. October, 1983.

Statelmire, Jim. CECOS, NY. October 1983.

Roarback, Jom. Delaware Solid Waste Authority, DE. October, 1983.

Vetter, Bob. Department of Public Works, Madison, WI. October, 1983.

COPYRIGHT NOTICE

Figure 20	From Water and Waste-water Technology. John Wiley and Sons, Inc., New York, 1975. Used by permission of the publisher.
Figure 22	From Water and Waste-water Technology. John Wiley and Sons, Inc., New York, 1975. Used by permission of the publisher.
Figure 24	From "Operation and Maintenance of Wastewater Collection Systems" by the Water Pollution Control Federation. Washington, D.C., 1980. Used by permission of the Water Pollution Control Federation.
Figure 25	From "Operation and Maintenance of Wastewater Collection Systems" by the Water Pollution Control Federation. Washington, D.C., 1980. Used by permission of the Water Pollution Control Federation.