United States
Environmental Protection
Agency

Office of Air Quality
Planning and Standards
Research Triangle Park NC 27711

EPA-453/R-94-049
July 1994

Air

EPA

OIL SUPPRESSION OF PARTICULATE MATTER AT GRAIN ELEVATORS

control technology center

ctc

EPA-453/R-94-049

Oil Suppression of Particulate Matter at Grain Elevators

CONTROL TECHNOLOGY CENTER

Sponsored by

Emission Standards Division
Office of Air Quality Planning and Standards
U.S. Environmental Protection Agency
Research Triangle Park, NC 27711

Air and Energy Engineering Research Laboratory
Office of Research and Development
U.S. Environmental Protection Agency
Research Triangle Park, NC 27711

July 1994

DISCLAIMER

This report has been reviewed by the Control Technology Center (CTC) established by the Office of Research and Development (ORD) and Office of Air Quality Planning and Standards (OAQPS) of the U.S. Environmental Protection Agency (EPA), and has been approved for publication. Approval does not signify that the comments necessarily reflect the views and policies of the EPA, nor does mention of trade names, organization names, or commercial products constitute endorsement or recommendation for use.

TABLE OF CONTENTS

LIST OF TABLES

LIST OF FIGURES

PREFACE

The Control Technology Center (CTC) was established by EPA's Office of Research and Development (ORD) and Office of Air Quality Planning and Standards (OAQPS) to provide technical assistance to State and local air pollution control agencies. Several levels of assistance are provided by the CTC. First, a CTC Hotline is available to provide telephone assistance on matters relating to air pollution control technologies. Second, more in-depth engineering assistance is provided when appropriate. Third, the CTC can provide technical guidance by designing technical guidance documents, developing personal computer software, and presenting workshops on control technology matters. The CTC is also the focal point of the Federal Small Business Assistance Program (SBAP), and maintains the Reasonably Available Control Technology/Best Available Control Technology/Lowest Achievable Emission Rate (RACT/BACT/LAER) Clearinghouse and International Technology Transfer Center for Global Greenhouse Gases (ITTCGGG). Information concerning all CTC products and services can be accessed through the CTC Bulletin Board System (BBS), which is part of the OAQPS Technology Transfer Network (TTN) bulletin board system.

This report was prepared to evaluate the effectiveness of oil to suppress particulate matter (PM) emissions from grain elevators; it was not intended for use in developing AP-42 emission factors. The CTC undertook this effort to provide technical assistance to the Nebraska Department of Environmental Quality (NE DEQ) in its efforts to assess the viability of oil suppression technologies. The scope of the project was limited to a presentation of findings based on a review of existing literature concerning oil suppression technologies and conventional controls for grain elevators. The cancellation of proposed tests to evaluate the effectiveness of oil to suppress PM emissions prevented the inclusion of current test data demonstrating reduction efficiencies. Based on findings obtained in literature concerning efficiency and economic and safety factors, oil suppression appears to be a promising technology for the grain handling industry. However, EPA has concluded that existing literature and test results do not adequately document the performance of oil suppressant technology. The CTC, the Federal SBAP, EPA's Technical Support Division, the Nebraska DEQ and SBAP, and the Feed and Grain Association are exploring and planning new tests to more accurately determine the performance of oil suppression. A CTC report on the results of these tests is expected in early 1995.

EXECUTIVE SUMMARY

The new operating permit program developed pursuant to Title V of the Clean Air Act Amendments (CAAA) of 1990 will require grain elevator owners to pay fees based on the amount of particulate matter emissions generated. Many grain elevators in Nebraska currently are operated without controls, but the new CAAA requirement is prompting many elevator operators to evaluate existing control technologies. The devices conventionally used to control dust emissions from elevators are fabric filters and cyclones. The high cost of these devices, however, has generated interest in the use of oil additives to suppress dust, especially in small elevators. The Nebraska Department of Environmental Quality (NE DEQ) has asked the Control Technology Center (CTC) in the Emission Standards Division of the United States Environmental Protection Agency (U.S. EPA) to assist in the evaluation of the oil suppression technology.

Grain elevators act as intermediate storage and transfer points for grain as it is transported from the farms to the market. The operations performed at elevators, including receiving, handling and transfer, drying, loading and shipping, generate emissions of particulate matter (PM) in the form of grain dust, which is the pollutant of concern at elevators. The basic oil suppression system applies a fine spray of edible oil (either mineral or vegetable) to the grain stream to coat the grain surface. The dust adheres to the oil on the grain, thereby decreasing the amount of airborne dust within the elevator.

This report evaluates oil suppression systems and compares their cost and effectiveness to those of the existing conventional controls used by elevators, specifically fabric filters and cyclones. This analysis demonstrated that the oil suppression system may effectively reduce particulate matter emissions in grain elevators and at a much lower cost than conventional controls. The major deterrent regarding use of an oil suppression system is the response of grain exporters and the market to oil-treated grain. Since many grain users in the industry are unsure about the effect of oil on the quality of the grain, exporters are hesitant to purchase such grain, even though studies have shown that the oil produces no significant effects. Despite this attitudinal impediment, oil suppression systems appear to be an attractive and feasible alternative to conventional control devices.

Additional testing is required to determine the actual effectiveness of oil suppression systems. The CTC, Federal SBAP, and other EPA programs are working with the NE DEQ and Feed and Grain Association to explore and plan new testing in the fall of 1994. A new or revised report will be issued by the CTC once these tests are complete and the results evaluated.

CHAPTER 1

GRAIN ELEVATOR OPERATIONS AND EMISSIONS

A. INTRODUCTION

Grain elevators produce particulate emissions (PM) in the form of dust. Conventional methods of emissions control at grain elevators include fabric filters, cyclones, and dust recirculation. Although such methods are usually highly effective in reducing dust emissions to the atmosphere, they generally are expensive.

Since the initial investment for oil suppression is significantly less than for conventional control methods, oil suppression is being considered as an alternative means of dust control.

The Nebraska Department of Environmental Quality (NE DEQ) has requested EPA's Control Technology Center's (CTC's) assistance in evaluating oil suppression control technology for grain elevators. Many grain elevators are not controlled in Nebraska, but the operating permit fee schedule (under Title 40, Code of Federal Regulations, Part 70), which is based on amount of emissions, is prompting many operators to consider controls. The suppression system is believed to be more cost effective and better suited for retrofit than more conventional control systems, especially for small country elevators. The NE DEQ needs to know more about the effectiveness of this control system.

To assist the NE DEQ, the CTC undertook a project to review available literature on this control technology, prepare a description of the oil suppression control system (including cost information), and prepare a report evaluating the effectiveness of the system. This report documents the CTC's project findings. This report also was to include an evaluation of new emission test data to be provided by others. These tests were not performed. The CTC and Federal SBAP are pursuing additional testing so that the effectiveness of this promising technology can be determined more accurately.

B. INDUSTRY OVERVIEW

The grain handling and processing industry transfers grain (including wheat, corn, soybean, and rice) from farms to mills and plants where the grain is used to produce various commodities, such as flour, starch, oil, and animal feed. Grain elevators act as intermediate storage and transfer points for the grain between the farms and the markets [(1), p. 517].

1. Elevator Classification

Grain elevators are classified as either country elevators or terminal elevators, according to elevator size, grain source, and final destination of the grain. Country elevators accept the major portion of their grain from farms, while terminal elevators are often subdivided into port terminals and inland terminals (subterminals). The subterminals accept the majority of their grain

from country elevators and a small portion from farms directly. Grain is shipped from the subterminals to the port terminal or directly to the processors [(1), p. 517]. Figure 1-1, a schematic of a traditional country elevator, illustrates typical grain elevator operations.

2. Emission Sources

The pollutant of concern at grain elevators is PM in the form of grain dust. Dust is entrained in incoming grain, and the materials-handling operations at grain elevators increase the dust concentration level. The dust is often comprised of 60-90% organic material, while 3-20% of the inorganic material may be free silicon. The particulate matter typically includes grain kernel particles, spores of smuts and molds, insect debris, pollen, and field dirt [(2), p. 2-12, 2-14]. The size of the grain, its moisture content, the percentage of foreign matter in the grain, and the extent of handling affect emissions and their makeup [(2), p. 2-14, 2-15, 2-16].

Not all grains are alike or have the same emissions' profile. EPA tests indicate that dust emissions from soybeans are greater than those from corn, wheat, or milo; these excess emissions are attributed to excess soil collected during harvesting of the low growing beans. The methods used to unload, handle, process, and load the grain can also greatly affect emission levels. Dust is emitted from each process within the elevator, often in the form of fugitive emissions [(2), p. 2-14].

C. ELEVATOR OPERATIONS

Each class of elevators performs the basic operations of receiving, handling and transfer, drying, and loading and shipping, regardless of elevator size [(1), p. 517].

1. Grain Receiving

Trucks, railcars, and barges deliver the grain to the elevators, with each mode of transport employing various methods of unloading [(1), p. 519].

a. Truck Receiving

Trucks unload the grain on a dumping platform or at a dump pit, either of which may be open, partially contained, or completely enclosed. By raising the front end of the truck bin, the grain falls into an underground pit from the back of the truck [(1), p. 519]. Emission levels produced during the dumping operation depend upon the:

- truck type;
- size of the receiving hopper;
- speed at which the grain is dumped;
- grain type;
- surface moisture content of the grain;
- amount of foreign matter in the grain [(2), p. 2-19];
- drop height; and
- the wind currents [(1), p. 519].

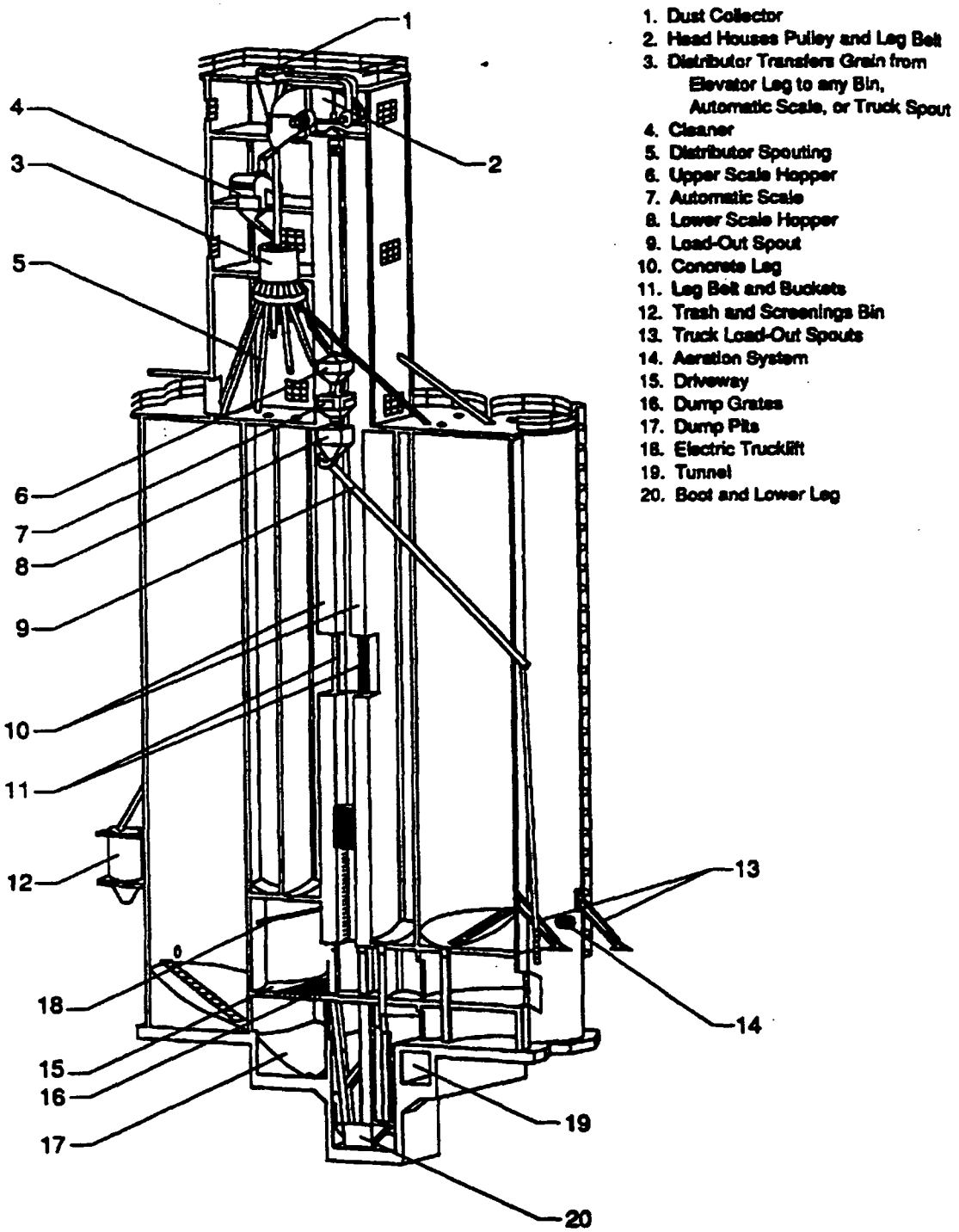

Figure 1-1: Schematic of a Traditional Country Elevator [(1), p. 518]

b. Railcar Receiving

Railroad hopper cars or boxcars may be used to transport grain. Hopper cars unload grain from the bottom of the car into a pit similar to that used for truck unloading. To release grain from railroad boxcars, the inside grain door is broken. After the initial burst of grain flow ceases, power shovels or bobcats transfer the remaining grain from the car to the pit. Large facilities may use a mechanical car dump to swivel and tilt the car to release the grain into the pit [(1), p. 519]. Emission levels created during offloading of railroad hopper cars and railroad boxcars depend upon the:

- grain drop pattern [(1), p. 519];
- amount of wind protection;
- grain type;
- surface moisture content of the grain; and
- amount of foreign matter in the grain [(2), p. 2-20, 2-22].

In addition to the factors listed above, the size of the receiving hopper affects the emissions from railroad hopper cars, and the method used to unload boxcars affects emissions from them. [(2), p. 2-20, 2-22, 2-23].

c. Barge Receiving

Barges are unloaded using either a pneumatic discharge system or a bucket elevator which is lowered into the hold to remove the grain and dump it into the pit [(1), p. 519]. Emission levels generated during grain transfer depend upon the:

- type of grain;
- moisture content of the grain;
- amount of foreign matter in the grain [(2), p. 2-23];
- amount of wind protection;
- conveyor transport speed and distance; and
- vertical drop heights at transfer points.

2. Grain Handling and Transfer

Grain is transferred within elevators using bucket elevators (legs), belt conveyors, and gravity flow. The buckets in the legs collect the grain in the boot and carry it to the head of the leg by way of an internal pulley mechanism. Gravity feed transfers grain to belt conveyors which horizontally transport the grain within the elevator. Grain is removed from the conveyor belt at the dump station, or at another point along the belt by a tripper. Grain is moved to storage and load-out areas using gravity flow through spouts [(1), p. 522].

Dust is produced as grain is discharged into the boot, as the buckets collect the grain while moving through the boot, and as the head releases the grain from the elevator. Emissions are also generated as the grain falls onto and from the conveyor belt. Dust particles attached to

the conveyor are released from the belt as it moves on the underside of the system. When expelling grain through spouts using gravity flow, dust emissions are also created [(1), p. 522].

The speed at which handling and conveying equipment is operated can greatly affect the amount of emissions produced. Dust is produced when grain is agitated or disturbed. If handling and conveying equipment is operated at a slower speed, dust emissions will usually be reduced. Hoods vented to cyclones or fabric filters are needed on handling equipment at points where the grain is being disturbed (e.g., where it enters or leaves a conveyor belt) [(3), p. 4-12, 4-14].

"Legs" (or bucket elevators) are areas where emissions can occur. Grain enters the bottom of the leg and is carried to the top by buckets. Since positive pressure is created at the top by this movement, the top of the leg must be vented to a control device to prevent the build up of dust. The leg can also be operated at a slower speed to reduce the formation of dust [(3), p. 4-14].

Scale hopper and surge bins are vented to a control device such as a cyclone or fabric filter. Storage silos produce minimal emissions and are sometimes vented to a control device. Grain cleaners screen the grain to remove impurities such as dirt, sticks, and other trash. Emissions from screen cleaners and scalpers are controlled by hooding and/or enclosing the equipment and ventilating the particulate material to a cyclone or fabric filter. The best grain cleaning equipment uses air-tight screening [(3), p. 4-17].

3. Drying

Dryers, specifically batch or continuous-flow dryers, reduce the moisture content of the grain in the elevators. Batch dryers dry and cool motionless grain, while continuous-flow dryers service grain as it moves through the dryer. The continuous-flow dryers are either cross-flow, concurrent, or counterflow dryers, depending upon the movement of the air with respect to the grain column. In cross-flow dryers, which are the most common, air flows across the column. Air moves in the direction of grain flow in concurrent flow dryers, which use higher air temperatures and produce the highest quality grain. The design of concurrent flow dryers is more complex, however, and they are susceptible to fire. Air moves in the opposite direction of the grain flow in counterflow dryers; these dryers achieve the most drying in the smallest space, but are less efficient, harder to build, and generate the lowest grain quality of all dryer types [(1), p. 523].

Column and rack dryers are two types of grain dryers most often used in the industry. Column dryers pass grain between perforated plates. Grain is dried with a stream of heated air that moves from the inside plate out through the grain. Rack dryers use a series of baffles around which the grain and heated air must flow. Due to their design, uncontrolled column dryers produce fewer emissions than rack dryers. Various types of screens are used as control devices on grain dryers. The level of emission control can be adjusted by changing the screen size on the dryer [(2), p. 2-29, 2-31; (3), p. 4-19].

4. Loading and Shipping

Different techniques and control strategies are used in loading trucks, railcars, barges, and ships. Most involve the use of some type of enclosure usually connected to a control device such as a fabric filter or cyclone to prevent particulate emissions. Particulate emissions can be reduced during loading if the free-fall distance of the grain can be minimized [(3), p. 4-22, 4-26].

a. Truck Loading

Particulate emissions from truck loading are affected by free-fall distance and wind. Grain dust emissions can be significantly reduced by minimizing the free-fall distance emissions and providing the truck shelter from the wind while loading. [(2), p. 2-31, 2-33].

b. Railcar Loading

Hopper cars and boxcars are the two types of railcars typically used in grain loading operations. Emissions are reduced while loading hopper cars by minimizing the free fall distance from the spout to the top of the hopper car. Emissions from boxcar loading are reduced using enclosures around the loading area [(2), p. 2-33, 2-34, 2-35].

c. Ship Loading

Bulk carriers, tankers, and 'tweendeckers are the three types of ships most often used for grain transport. Tankers are more enclosed than the other two types of ships and produce fewer particulate emissions when loaded. Due to the large open hatches used for loading, bulk carriers have the potential to produce more emissions than tankers. The use of a high-speed conveyor belt to transfer grain from the loading spout to the ship gives tweendeckers the potential to produce more emissions than bulk carriers [(2), p. 2-37, 2-38, 2-39].

d. Barge Loading

Particulate emissions can result when grain is poured into the hatch on top of the barge. Minimizing the free fall distance of the grain is an important step in reducing emissions. Particulate emissions can also result from grain movement inside the barge. This type of emission can be minimized by using smaller openings to load and unload grain. By minimizing the exposed surface area of the grain, wind will not have as great a chance to stir up the grain dust [(2), p. 2-35, 2-37].

CHAPTER 2

OIL SUPPRESSION SYSTEM

A. INTRODUCTION

With the establishment of stricter dust regulations and safety standards by the Federal government, there has been heightened interest in the use of oil for dust suppression at grain handling facilities. Many large companies have already installed equipment and implemented operating procedures required by the new regulations, but smaller facilities that do not use mechanical dust control equipment may also find oil suppression to be cost effective.

B. SYSTEM DESCRIPTION

Oil suppression has been used worldwide for more than a decade, with its users ranging from small country elevators to large export terminals. The basic oil suppression process consists of applying a fine spray of edible oil (either mineral or vegetable) to the stream of grain entering the grain elevator [(4), p. 11]. Use of oil has been approved for wheat, corn, soybeans, barley, rice, rye, oats, and sorghum in the Food and Drug Administration's (FDA's) regulation 21 CFR 172.878 [(5), p. 5].

In the oil suppression system, an oil additive coats the grain surface to a depth dependent upon the amount applied and the uniformity of coverage. Dust adheres to the oil on the grain's surface as the grain moves throughout the handling process. Physical forces such as gravity, inertia, and vibration can cause dust particles to detach from the grain surface by overcoming the adhesive force between the oil and the dust. The suppression of smaller dust particles is more prevalent because the adhesion force for smaller particles is greater relative to the acting physical forces. A type of coagulation exists with the application of oil. Small dust particles will likely attach themselves to other small matter, which tend to settle out more quickly than separate particles [(6), p. 3].

1. Oils

The two types of oils used in the dust suppression system are soybean oil and mineral oil. Quality is an important factor in the selection of the oil, since a poor quality oil may cause deterioration of the grain [(7), p. 9].

a. Soybean

Before soybean oil is used, it needs to be fully refined, bleached, and deodorized [(7), p. 9]. No limit has been set on the application rate for soybean oil; good manufacturing practice governs its use, however, since overapplication is ineffective and costly. Although

soybean oil loses viscosity in cold weather and is subject to oxidation which leads to rancidity, these problems are reduced through the use of heaters and proper oil handling [(4), p. 13].

b. Mineral Oil

When white food-grade mineral oil (composed primarily of liquid hydrocarbons paraffinic and naphthenic in form extracted from petroleum) is used, it needs to be stable [(7), p. 9]. The fractional distillation of crude oils produces either paraffine or naphthene. Since paraffine is more abundant, mineral oils of a paraffine nature are less expensive. Naphthenic oil is used in colder climates since it has a better pour point (the lowest temperature at which the oil flows) [8]. Before use on grain, this mineral oil must be cleaned and approved through testing. Unlike vegetable or grain oils, mineral oil does not have the potential for oxidation, so the problem of rancidity does not exist. The application of white mineral oil is limited to 0.02% by weight or 200 ppm on grain used for human consumption and 600 ppm for grain consumed by animals. The pour point and viscosity are important criteria when selecting white mineral oil [(4), p. 11; 13].

2. Effectiveness

The optimum control efficiency for an oil suppression system is realized when uniform coverage of each grain surface is accomplished. An application rate of 130-160 ppm (4-5 quarts/1000 bushels) has proven to be effective, though a rate of 200 ppm (6-7 quarts/1000 bushels) is allowed by the FDA [9]. Vendors predict a dust reduction of 75-99% [(10), p. 1]. Testing conducted by the U.S. Department of Agriculture (USDA) in 1982 demonstrated dust reductions ranging from 31-96% for mineral oil applied to corn, and 63.3-77% for soybean oil applied to wheat [11].

The amount of oil needed to control grain dust emissions depends on the type of grain being handled and the amount of dust present. Excessive application of the oil will not substantially increase the amount of dust suppressed by the oil. Therefore, in order to optimize the dust retained by the grain and prevent the overuse of oil, the application rates provided in Table 2-1 for certain grains have been recommended [12].

Table 2-1: Recommended Application Rates of Mineral Oil and Soybean Oil to Various Grains [12].

Grain	Quarts/1,000 Bushels	PPM
Corn	6 - 6.8	175 - 200
Sorghum	4 - 6	120 - 175
Soybeans	4 - 6	120 - 175
Wheat	6 - 6.8	175 - 200

The amount of dust captured by the oil depends on a dust particle's physical forces (gravity and inertia), the amount of oil on the grain's surface, and dust particle size. An oil suppression system is very effective on smaller micron particles, which are the most volatile and create the environment for grain dust explosions. Very effective dust control is achieved for up to six months, or for six to eight handlings of the grain after the oil application, after which dust control begins to decline. However, tests performed by the USDA and other operators indicate that the effects of the oil may last for the first 8-10 grain handlings and have not diminished after two years in storage. According to the American Soybean Association (ASA), up to 0.14% of the grain weight is lost each time the grain is handled, but is reduced to 0.035% with the use of an oil additive [(10), p. 2].

3. Point of Application

The success of an oil suppression system depends primarily upon the point of application, which should be as early as possible in the grain handling process, preferably before the grain is first elevated [(4), p. 15]. To enable thorough mixing of the oil with the grain and ensure complete coverage, the grain should be sprayed at an active point, or when it is suspended. Suitable mixing is achieved within 20-70 seconds, and is contingent upon an effective initial application, the oil viscosity, and ambient temperature. Since oil viscosity varies with temperature, both of these parameters must be monitored and controlled during application. This can be accomplished using mechanical or electronic flow meters. The temperature can be controlled with heat tape or heaters. The most effective location for the heater is inside the controller directly before the nozzle [13]. Experts recommend that the oil be kept at a temperature in the range of 4-27°C and never be heated above 49°C since this can cause the oil to break down [4, p. 15].

The ideal point of application is at the first point of transfer, most often between the receiving pit gate and the leg. As illustrated in Figures 2-1 and 2-2, the oil can be applied to the grain before it enters the bucket elevator leg, either immediately before or after the pit gate [12].

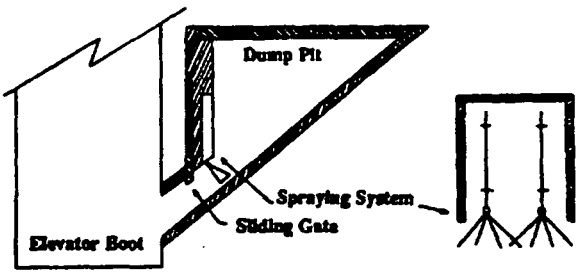

Figure 2-1: Nozzle Assembly in Receiving Pit. Alternative 1. [12]

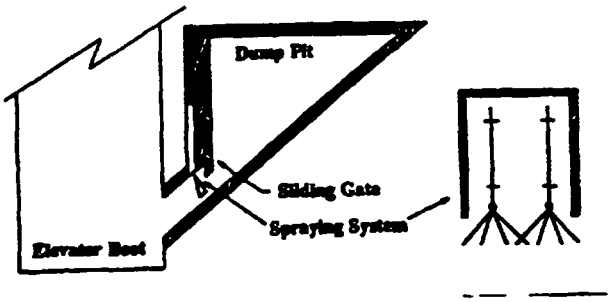

Figure 2-2: Nozzle Assembly in Receiving Pit. Alternative 2. [12]

For better dispersion, a second nozzle may be added at a transfer point, such as a bin exit or belt-to-belt transfer location, as shown in Figure 2-3.

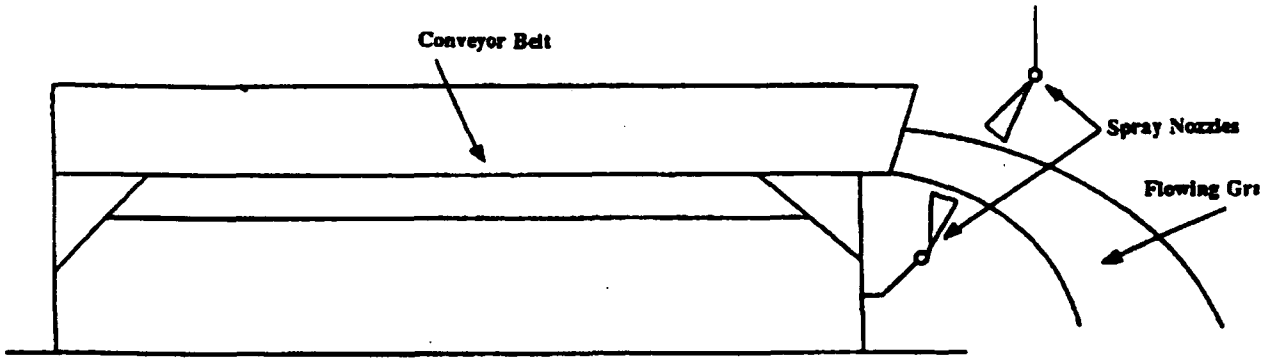

Figure 2-3: Nozzle Assembly in Conveyor System. [12]

The transfer point selected should be as close to the origin of grain movement as possible. It is desirable to use mechanical or gravitational mixing after the application to ensure complete blending of the oil and grain. A mechanical device may need to be used in conjunction with the oil system if the oil cannot be applied early enough in the handling process [(14), p.12].

4. Equipment

The complexity of the oil suppression system depends on the needs of the elevator operator [12]. The basic equipment required consists of a storage tank suitable for holding food-grade oil, a small pump, check valves to preclude oil from draining when the pump is off, a filter, a pressure regulator to control the flow and application rate, a pressure gauge, automatic shut-off and limit switch to stop the oil when the grain flow ceases, tubing, and a spray nozzle configuration [(4), p. 13]. When the system is operated at an ambient temperature less than 30°F (-1°C), tank heaters or in-line heaters are necessary to warm the oil which is best applied at a temperature of at least 75-80°F (24-27°C) [12]. It is desirable to automate the system with solenoid valves or electronic eyes in the grain stream to activate the application of the oil when the grain is in motion. An illustration of a typical system is given in Figure 2-4 [(7), p. 10].

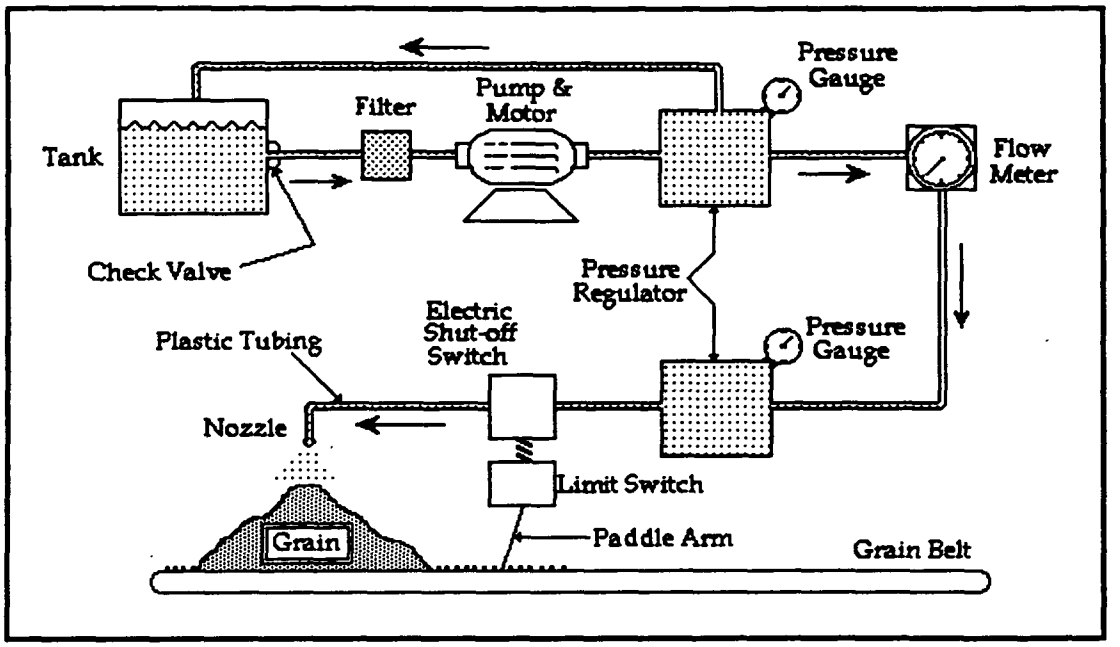

Figure 2-4: Typical Oil Suppression System.

a. Main Storage Tank

The main storage tank is often made out of mild carbon steel, stainless steel, glass-lined steel, or Fiberglass certified as "food grade" or "sanitary" by the National Sanitation Foundation. Mild carbon steel tanks should be treated with a protective coating (which meets FDA and USDA requirements) that helps maintain oil integrity. The outside of exterior storage tanks should be coated with flat black paint to achieve maximum solar collection. The draw-off level of the tank should be approximately 10 inches from the tank bottom to allow for particulate matter settlement, which is particularly important for uncoated tanks. The boot should be cleaned regularly to preserve the food grade quality of the oil. In addition, water draw should be placed at the bottom of the tank and the top vent should be protected with desiccant. A capacity of 8,000 gallons is suggested for bulk storage of 6,000 to 6,500 gallon-shipments [(15), p. 1]. However, a storage capacity not greater than 20-30% of the annual capacity is recommended to limit the amount of oil that could be contaminated [12].

The oil is transferred from the main storage tank to a day storage tank from which it is pumped, preferably with a gear type pump, to the grain elevator. This operation can be regulated automatically using a ceramic float valve inside the day tank. A heater is suggested to ease the transfer of the oil from the main tank to the day tank [(15), p. 2]. Piping should be made from approved steel or certain thermoplastics, such as food grade or sanitary variety. Fittings, couplings, valves, or pipes should not be made from copper, bronze, or brass [(15), p. 1].

b. Day Storage Tank

The day tank should be a 250-gallon insulated stainless steel tank with a thermostatically-controlled electric heating coil which keeps the oil at a temperature of 70°F. The oil pumped from the day tank to the elevator passes through an industrial hydraulic filter. The primary lines carrying the oil from the day tank to the point of application should be covered with explosion-proof, thermostatically-controlled heat tape to sustain the oil temperature and viscosity at the point of application [(15), p. 2].

c. Other Equipment

The oil pressure needed to apply the appropriate amount of oil at the point of application depends on the nozzle diameter and the oil temperature, and is achieved using a regulator. The pressure can range from 30-65 psi and the type of nozzle selected depends on the grain flow rate desired [(15), p. 2].

C. EFFECTS OF OIL

When sufficient mixing is achieved, the following short term effects are realized: clean leg boot environment, clean leg trunk and casing environment, and no dust emissions in the leg head, distributor, and gallery areas. The long term effects include: no dust problems when retrieving and loading out treated grain, self cleaning of the bins and silo walls when filling and unloading, and easier, less expensive housekeeping. However, the use of an oil additive does not eliminate the need for safe operating procedures, including proper housekeeping measures and routine equipment maintenance [(16), p. 47-48].

a. Mechanical Devices

The mineral oil applied to the grain does not clog the conventional dust collection equipment and the efficiency of such controls is improved as the result of the aggregation of fine dust. There has been no evidence of the formation of slick oil spots from the application of the oil, though oil applied directly to older conveyor belts may shorten the belt operation life through deterioration, which may warrant the use of oil resistant belting. Overall, the reduced dust levels improve the safety and maintenance of the facility [9].

b. Shrinkage Reduction

Weight that would otherwise be lost as grain dust is now retained by the grain stream, and can be sold as grain. For lots treated with mineral oil, approximately 250 pounds of dust are retained per 1,000 bushels of grain. This translates into approximately 1-1.5 bushels per 1,000 bushels that are not lost to shrinkage [12].

c. *Grain Quality*

Lab studies produced the following results on the effect of mineral oil on the quality of the grain to which it is applied. No odor was detected on the grain from single applications of 200 ppm of oil or multiple treatments up to 600-800 ppm. No change in the grade of the grain was observed up to 9-12 months and there was no effect on the germination. The drying capability was actually increased with reduction in dust, and the oil did not encourage the growth of mold. The angle of repose decreased with the application of the oil, and short term repellency of insects was evident with the application of 200 ppm of mineral oil [9]. Directly after the oil application, a slight decrease in test weight was observed which returned to the original value within 6 months. This initial decline in weight is attributed to increases in kernel size from the adhered dust, making the kernels bigger so they stack differently in the measurement cup [13].

d. *Grain End Use*

There was no change in the amount of power needed by the milling equipment for the treated and untreated grain. The flour color was not affected as shown in test millings and bakings. USDA tests demonstrated no difference between the baking quality of flour from untreated and treated wheat.

e. *Grain Dust Explosions*

Dust generated by the grain handling process creates a potentially hazardous environment that could result in an explosion. Since the dust adheres to the grain and the amount of suspended dust particles is greatly reduced, the potential for a grain dust explosion is decreased [12].

f. *Reduction in Health Hazards*

The application of oil reduces the levels of inhalable and respirable dust. Inhalable dust particles are smaller than 10 microns in diameter and can penetrate the upper respiratory system, acting as an irritant. Respirable dust particles are smaller than 5 microns in diameter and can penetrate the lower respiratory system, resulting in chronic respiratory disorders [12].

D. SYSTEM BENEFITS AND DISADVANTAGES

1. System Advantages

Several economic and safety benefits are realized from the use of an oil suppression system.

a. *Economics*

The amount of shrinkage is decreased because the dust adheres to the grain and less grain is lost as dust. This attached dust may now be sold at grain prices while reducing the costs

associated with dust disposal and handling [13]. In addition, the labor costs associated with housekeeping are reduced since the amount of time required for dust removal is lower because of smaller amounts of dust present within the elevator. The decreased amount of dust present in the elevator can also extend the life of the equipment since the moving parts are cleaner [17].

b. Equipment

With regard to installation, operation, and maintenance, the cost of the oil suppression system is low when compared to mechanical dust controls [13]. To achieve optimum benefits, the oil must be applied correctly. Mechanical dust controls may also be needed in addition to the oil additive if the oil cannot be applied early enough in the grain handling system as a result of the grain elevator design [(4), p. 15]. However, when used in conjunction with an oil suppression system, some of the fans in a mechanical air system may be turned off, which will reduce the electricity costs [13]. In addition, the oil system requires little or no maintenance while pneumatic systems, or baghouses, must be inspected and serviced daily [(14), p. 10].

c. Safety

Oil additives reduce the amount of dust emitted within an elevator, thereby increasing worker safety by decreasing the possibility of an explosion and providing a cleaner working environment. The amount of respirable dust inhaled by the workers is decreased because the dust is entrained in the grain [17]. Since the threat of explosion is greatly decreased with the use of an oil additive, insurance premiums may be reduced [13].

2. System Disadvantages

a. Grain Quality Concerns

The main obstacle for the oil suppression system relates to the effect the oil has on grain quality. Grain exporters are hesitant to buy grain treated with an oil additive since they are not sure of the acceptance of oiled grain in the world market, especially with foreign market demands for improved quality of exported grain, governed by new grain standards with an emphasis on cleaning [18].

It is not known how the foreign matter attached to the grain will affect its quality and price [14, p. 10]. Mills and distilleries are concerned about the long-term effects of oil on the grain. Mills have stated that the oil seems to adversely affect the tempering process in wheat and causes discoloration in flour. However, studies on oil-treated grain conducted by the American Malting Barley Association and U.S. Grain Marketing Research Laboratory reveal no significant effects on functional properties of oil-treated wheat.

b. Application

Because the application rate for mineral oil is limited by the FDA to 200 ppm, it is necessary to monitor the oil flow rate, which is affected by temperature and pressure. As the pressure increases, the temperature of the oil decreases. The best way to control the application

rate is with a flow meter that indicates the flow rate in gallons per minute. Automatic levers may be installed to open and shut valves to control the flow of oil, ensuring that oil is applied only when the elevator equipment is operating. However, several operators have experienced problems with the oil application rate when the systems were installed in stages. The application rate is more accurate when using complete systems in which the rate can be easily monitored and controlled [18].

There is currently no method for determining the amount of oil that has been applied to the grain to judge compliance with FDA limits. Therefore, oil could conceivably be applied at each handling facility. To prevent overapplication of oil, shipping papers that identify the application of oil may be used to notify the subsequent recipient of the grain [18].

This Page Intentionally Left Blank

CHAPTER 3

OIL SUPPRESSION SYSTEM - TESTS

A. INTRODUCTION

The results of various tests performed to determine the effectiveness of oil application systems in suppressing dust from grain elevators are outlined in this chapter. As part of this coordinated CTC project, such a test was to have been conducted at a grain elevator site by others. However, because funding for the test was not obtained, the test was not performed. The discussion of tests in this chapter, therefore, is limited to those described in the literature.

Neither the validity of the tests described in the literature, nor the appropriateness of test protocols used was evaluated, for these tasks were beyond the scope of this project. Rather, the results of the tests were analyzed to ascertain if they demonstrated the effectiveness of oil application systems in suppressing dust. However, EPA's Emission Inventory Branch of the Office of Air Quality Planning and Standards, has concluded that tests described in the literature and cited here are inadequate for the purpose of establishing emission factors for grain elevators using oil suppression technology.

B. OIL SUPPRESSION TESTS

1. U.S. Grain Marketing Research Laboratory

The U.S. Department of Agriculture performed a large scale study at the U.S. Grain Marketing Research Laboratory in Manhattan, Kansas based on thirty-eight tests performed in December 1980 at the Ohio Farmers' Grain Elevator in Fostoria, Ohio. The study was designed to determine the effectiveness of water, deodorized soybean oil, and carnation mineral oil in suppressing dust emissions from corn, wheat and soybeans [11].

a. Elevator Configuration

The configuration of the grain elevator used in this test is illustrated in Figure 3-1. An enclosed 36-inch-wide conveyor belt transferred grain from a storage bin at 400 ft/min. At Site A the grain was moved from the first conveyor belt to the second. Site B marks the end of the second conveyor belt (100 feet from Site A) where the grain entered 25 feet of spouting and subsequently fell into the boot on the descending side of the bucket elevator. At a rate of 10,000 bushels/hour, the grain ascended 240 feet and was released into spouting, from which it fell into a 2,500-bushel garner and subsequently a 2,500-bushel scale. The grain then was directed to a distributor and sent to Site C, the start of the gallery belt. The vertical distance travelled by the grain from the head of the leg to the gallery belt was 100 feet. From Site C the grain travelled 85 feet to Site D, the first tripper, and then to the house belt. Grain travelled on the house belt to the second tripper, Site E, which was located at the entrance to one of the three similar test

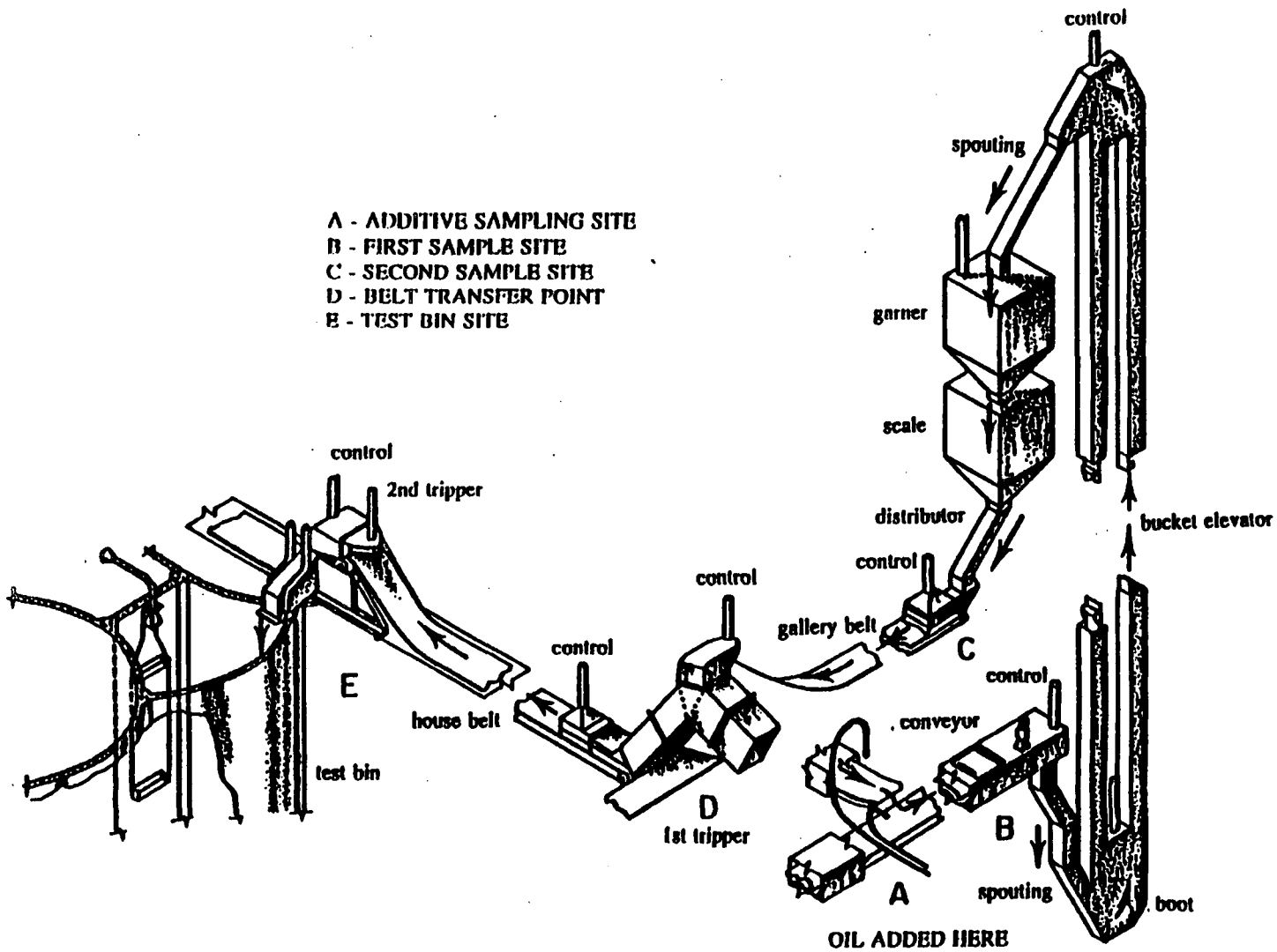

Figure 3-1: Test Facilities of Grain Handling Systems for Additive Study. [11]

bins. The test bins were each 114 feet deep and held 9,000 bushels. Site D was 25, 310, and 320 feet from the three bin sites [(11), p. 3, 4]

b. Existing Control System

The existing dust control system consisted of several baghouse filters located throughout the elevator. The various systems collected dust and discharged it through a system of ducts into a dust bin. The lower control system controlled Site B, collecting dust from the ducts at the end of the second enclosed belt and the boot of the bucket elevator. The upper control system serviced Site C, at the head of the bucket elevator and the garner. The gallery control system removed dust from the hood over the front end of the gallery belt and first tripper, Sites C and D. The headhouse system removed dust from hoods servicing the beginning of the house belt and second tripper, Sites D and E. In order to collect dust in bags for the test, the dust discharge duct at Sites B, C, between C and D, and between D and E were averted [(11), p. 4].

c. Additive Application

As illustrated in Figure 3-2, an automatic spray unit consisting of two nozzles, sprayed the grain stream at the first transfer point as the grain was moved from one storage bin to another. The first nozzle applied the additive to the top surface of the grain near the end of the first conveyor belt, and the second nozzle sprayed the underside of the grain stream as it fell from the first belt to the second belt, four feet from the first nozzle [(11), p. 5]. Some immediate mixing was achieved as the grain fell from the first belt to the second belt. The grain flowed at a rate of 400 ft/min. The level of additive applied to the grain ranged from 0.02-0.08% for the mineral oil on the corn; 0.02-0.06% for the soybean oil on the wheat; and 0.03-0.06% for the soybean oil on the soybeans. The oil flow rates were controlled with compressed nitrogen via a control valve. Since these tests were conducted during the winter in cold weather, heat was applied to the oil to achieve sufficient spraying. All three types of oil were separately applied to the corn, but the soybeans and the wheat were only treated with soybean oil [11].

d. Sampling Procedure

Two control lots of grain without oil suppression were tested, one with the dust control system on, and one with the dust control system off. High, medium, and low levels of oil were applied and tested with the dust control system off. At least one test with each type of oil was administered with the dust control system operating to determine the difference in the amount of dust collected by the existing control system. Hi-volume air samplers were used to collect airborne dust samples at Sites B, C, and E. The samplers operated continuously as the batch of grain moved through the elevator [11].

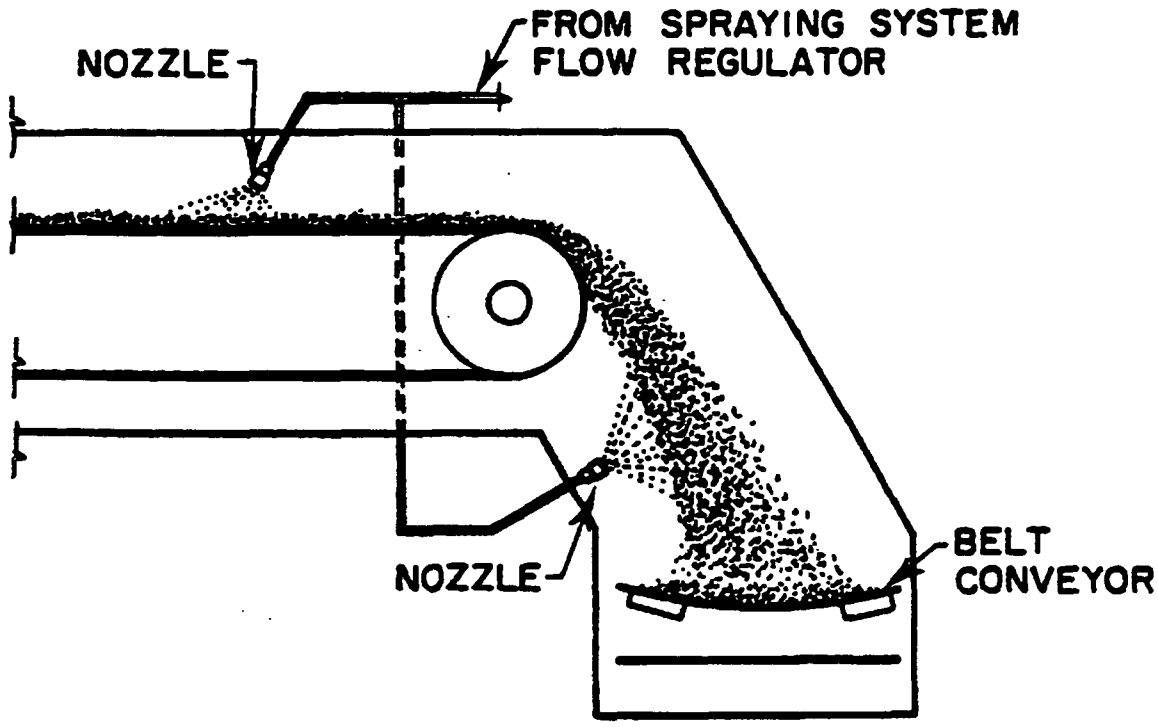

Figure 3-2: Liquid Additive Spraying System. [11]

Grain samples collected at Site C at two-minute intervals were analyzed for their fine material content, grain grade, moisture content, and weight -- a drop test dustiness analysis was performed using a HIAC particle counter (High Accuracy Particle Counter) to determine the particle size distribution and concentration. This test involved creating a dust cloud by dropping dusty material and allowing it to hit a surface. If two materials differing in dustiness are treated in the same manner, the two resulting clouds will differ in the number and size of particles. If no difference in the number or size of particles exists, the two materials are equally dusty. The objective of the test was to detect dust originating only from grain samples by preventing dust from grain handled outside the test environment from interfering in the total counts [11].

e. ***Results***

Since testing was conducted continually from December 7-12 due to a tight schedule, some fine dust possibly remained from one test to the next. Emissions were measured inside the enclosed transfer belt before entering the boot, at the open gallery, and inside the bin overspace where the bin was being filled. The drop test analysis showed significant dust reduction with the use of oil suppression for all three grains, often > 90%. Also, the use of oil reduced trailing dust emissions (dust from the work floor, garner, and gallery floor) by 75%. Since the FDA limits the application of oil additives to grain at 0.02% by weight, or 200 ppm, the table below provides only those results relating to an application rate of 0.02% by weight. Appendix A contains tables showing the complete results of the tests. Because the drop test results represent dust control

levels in a controlled (ideal) environment, they do not appear to represent practical levels of control.

Table 3-1: Percentage Reduction in Dust Concentration [11].

Grain type	Additive	Amount of additive	Dust control system	Reduction in pre-leg enclosed belt dust concentration Site B	Reduction in gallery open belt dust concentration Site C	Reduction in bin overspace enclosed dust concentration Site E
Corn	Mineral oil	0.02%	on	31.0%	73.3%	79.6%
			off	55.8%	96.7%	69.1%
Wheat	Soybean oil	0.02%	off	63.3%	77.0%	70.7%
			off[a]	-156.2%	-604.0%	6.5%

[a] Since these values are not valid reduction percentages, it is assumed that a malfunction occurred during testing. No explanation was given as to why these numbers were obtained.

Both oils had similar performances. Good reduction locations included the boot, bucket elevators, and the gallery floor. Bad reduction locations included the enclosed belt and the pre-leg belt. The authors concluded that the most effective level of oil treatment is approximately 0.03%. After twelve months of storage, no adverse effects on the grain were detected. The functional properties of the wheat, including baking and milling, were not affected and there was no evidence of oxidative rancidity for mineral oil treatments [11].

f. General Comments

The USDA reached the following conclusions from the results of the tests:

(i) Thorough mixing of the grain following the application of oil is one of the most critical elements in the success of controlling dust. The treatment should be applied at an early stage of grain flow from a bin. The modifications required for effective application in existing installations is minimal.

(ii) Little oil accumulated on the equipment or walls. This was credited to proper mixing and low treatment levels.

(iii) There was no consistent detection of the presence of soybean oil or mineral oil on the corn or wheat.

The tests demonstrated an effective reduction in dust emissions when 0.03-0.10% by weight of mineral oil was applied to all three grain types, and 0.02-0.08% by weight of mineral oil was applied to corn. The optimum effectiveness was achieved for oil applications in the range of 0.02-0.05%. The effectiveness of the mineral oil to control dust emissions from the corn

was not affected after three months of storage. Dust dispersion causes an average grain weight loss of 0.14% with each grain handling. The application of oil decreased this loss to 0.035% or less [11].

2. Agricultural Engineering Department at Texas A&M

The Agricultural Engineering Department at Texas A&M performed a study to determine the amount of dust retained by corn and milo with the application of mineral oil at different levels for varying grain dust concentrations.

a. Test Procedure

Mineral oil was mixed with the grain samples in a box at 0 ppm, 50 ppm, 100 ppm, 200 ppm, and 400 ppm by weight. Grain dust was subsequently added to the grain at concentrations corresponding to 0.0%, 0.1%, 0.25%, and 0.5% by weight of the grain. The samples were mixed again, after which the dust was removed and analyzed. From this, the optimal mineral oil application rate for dust retention was determined [6].

b. Test Results

1. Corn

A 200 ppm application rate for mineral oil on corn produced the maximum dust retention of 83.8%, of which 35.6% of the particles retained were less than 10 μm (PM-10). For the remaining free dust, 28.9% of the particles were PM-10 [6].

2. Milo

Results indicated that an application rate for mineral oil of 200 ppm provided the optimum dust retention of 73.7%, of which 46.8% of the particles retained were PM-10 [6]. For the remaining free dust, 33.7% of the particles were PM-10 [6].

c. Test Conclusions

The tests performed on the corn and milo grains illustrated a reduction in the amount of suspended smaller dust particles, with a greater amount of these smaller particles being retained on the grain surface. This adhered dust can be sold as grain, thereby increasing the value of each batch.

Since these tests were conducted in a controlled environment and not performed in an actual elevator, the results cannot be used as control efficiency data because the tests were conducted under ideal conditions, not actual field conditions. However, the results demonstrate the potential effectiveness of the oil suppression system and provide information regarding PM-10 emissions reductions [6].

CHAPTER 4

CONVENTIONAL CONTROLS

A. CONVENTIONAL CONTROLS

Conventional control methods for reducing PM emissions from grain handling and processing operations associated with grain elevators include process modifications to prevent or decrease emissions, and the use of capture and collection systems [(1), p. 524]. Grain handling generates PM emissions in the form of fugitive emissions, resulting from the dust's absorption of mechanical energy by the grain operations and the local air currents within the elevator. Process modifications are designed to reduce these effects.

The primary modifications employed for handling and transfer operations are construction and sealing practices that reduce air currents, minimize the vertical distance the grain must fall, and minimize grain velocities. Although the aforementioned practices minimize emissions, most elevators employ ventilation or capture systems to achieve emissions' rates that are within acceptable levels.

Except for small elevators, most grain handling and processing plants use ventilation or receiving pits, cleaning operations, and elevator legs. Hooding systems are sometimes used for handling and transfer operations [(1), p. 526]. The PM emissions are collected by capture systems, such as hoods and aspirators, and routed to the conventional collection controls. The collection systems most frequently used to control dust emissions from grain handling operations are fabric filters and cyclone collectors.

B. FABRIC FILTERS

The baghouse (or fabric filter), the most effective device currently used, demonstrates an efficiency greater than 99% and collects larger particles as well as very small and light particles [(1), p. 525-527]. The collected dust consists of a high concentration of fine, dry dust which creates a high explosion potential if the dust is not handled appropriately.

Operating grain elevators subject to the New Source Performance Standards (NSPS) requirements outlined in 40 CFR Part 60, Subpart DD use fabric filters exclusively. Elevators not subject to the NSPS, but governed by more stringent local requirements as a result of their location, also employ fabric filters [(3), p. 4-1].

The typical fabric filter used at an elevator filters 2,000-50,000 cubic feet of air per minute, depending upon the operating conditions at the particular elevator and the dust collection demand on the system. The filter operates under negative pressure with a fan drawing air through the apparatus [(3), p. 4-1].

This Page Intentionally Left Blank

Most filters are made of felted, synthetic fabrics, with air-to-cloth ratios ranging from 3:1 to 15:1; typical filters range between 8:1 and 11:1. Filter bags must be cleaned periodically. The dust cake may be dislodged from the fabric in several ways -- using back pressure; collapsing the cloth to crack the dust cake; snapping the cake off using compressed air; or blowing off the cake with a reverse jet that impacts the cloth's outside surface. When properly maintained, the fabric filters will emit no visible emissions [(3), p. 4-3].

C. CYCLONES

Cyclones retain a higher percentage of large particles than small particles; the large particles are often restored to the grain stream, while the smaller particles are emitted to the atmosphere. Cyclones demonstrate an efficiency ranging from 85-99% depending on the operation or area controlled in the handling system [(1), p. 525-527]. Sometimes cyclones are used to prefilter the air sent to baghouses so that a high portion of the collected dust can be reintroduced to the grain stream and the smaller, lighter and more hazardous particles can be removed [(19), p. 182].

Elevators not subject to the NSPS requirements, especially small and older facilities, use cyclones. These cyclones are classified as either "high-efficiency" or "high-throughput". High-efficiency cyclones have narrow inlets and long bodies when compared to their diameters, and small outlets; high-throughput cyclones have large inlets, large diameters, and large outlets. Unlike the fabric filter, the cyclone does not address the problem of visible emissions [(3), p. 4-3].

D. CYCLONE/BAGHOUSE COMBINATION

Many elevators use cyclones in a series within a baghouse. The collected dust is not sent through the grain handling and controls again. Certain limitations govern the use of this method to lessen the continual recirculation of dust [(19), p. 182]:

- The dust should not be reverted to the bucket elevator.
- The dust should be reintroduced to the grain stream below the point of collection.
- The dust should not be added to the stream in areas where the dust could reenter the controls.
- The dust added to conveyors or spouts should be introduced under or inside the grain stream.

E. CONTROL MALFUNCTIONS

Although the baghouse and cyclone are effective controls of PM emissions in grain elevators, both control devices can fail if the entire system is not properly operated and

maintained. [(1), p. 526] In order for the control devices to operate efficiently, the elevator operators must be aware of possible problems associated with the devices and prevent their occurrence. Typical system malfunctions are described below.

a. Fabric Filters

A decrease in the control efficiency of fabric filters maybe caused in several ways: tears in the bags; excess emission generation from the control device outlet; and plugging of the bags. In addition, operating problems may lead to the interruption or inefficient operation of the control device.

Bag blinding problems have often been observed in very humid areas, but similar problems are also seen in cooler climates. In cooler climates, bag blinding may result from ducting the elevator exhaust stream, generated from the handling of warm, moist grain, to a control device located outside in a cooler environment. Bag blinding may be diminished by using baghouse heating systems and cleaning the bags before ceasing operation of the system.

Dust bridging in the baghouse hopper, caused by poor hopper design or faulty shutdown methods, can be diminished by designing the system to allow elevator personnel to easily access the hopper for inspection and cleaning. Malfunction of the bag cleaning mechanism may cause dust to build up on the bags, ultimately leading to the plugging of the systems.

In some operations, the pulse-jet control panel sits on the top of an outdoor baghouse unprotected. Dust and moisture collecting inside the control panel may cause the solenoid valves to short circuit, resulting in failure of the system. This problem may be reduced by practicing appropriate general operation and maintenance procedures.

Since the emissions from several grain handling and processing operations are controlled by one air pollution control system, excess emissions may result from improper design and operation of the ventilation system connecting the source to the control system. [(1), p. 527-8]

b. Cyclone

The control efficiency of the cyclone is based upon design parameters and the velocity of the gas stream passing through the device. Reduced gas velocities, resulting from plugging in the cyclone, improper damper settings in the ductwork, or plugging in the ductwork that cause an increased pressure drop through the system, lead to a decrease in cyclone control efficiency. A common problem is air leaking into the cyclone from the dust discharge; this problem may be alleviated through routine checks of the dust discharge mechanisms. Routine inspections of the system identify problems that may lead to a reduction in control efficiency. Such examinations include a review of the cyclone pressure drop, the exhaust fan current, the condition of the cyclone walls and fan blades, and the exhaust rate at the pickup points. [(1), p. 527]

CHAPTER 5

CONTROL TECHNOLOGY COSTS

A. INTRODUCTION

In this chapter the costs of oil application systems and conventional control devices to control dust at grain elevators are discussed and compared. Most costs presented in this chapter were obtained either from the literature or from price quotes (or price sheets) prepared by vendors of oil application equipment or oil. (One set of cost numbers was obtained from an EPA report entitled *Standards Support and Environmental Impact Statement Volume 1: Proposed Standards of Performance for Grain Elevator Industry*.) The comparative cost analysis presented at the end of this chapter was prepared by a vendor of oil application equipment.

B. OIL APPLICATION SYSTEMS FOR DUST SUPPRESSION

The cost of installing and operating an oil application system depends on the local conditions and the availability of oil and equipment. The average installation cost in 1989 was $1000-$3000. According to a study conducted at Texas A & M University in 1985, a basic system should cost less than $5,000, with more complex self-monitoring systems ranging from $8,000-$10,000 [17]. A representative from InterSystems, Incorporated in Omaha, Nebraska indicated that current prices for the company's inclusive dust suppression system, the Dustop, range from $4,000 and up depending on the amount of oil required, which is based on the throughput and size of the grain elevator. Since grain handling operations vary among the different elevators, the oil application system must be custom fit to serve the particular needs of the grain elevator, thereby generating different cost estimates. The sections that follow present various cost estimates for oil application systems as provided by different vendors [20].

1. Cost Analyses for Oil Application Systems

Information obtained from price sheets and price quotes prepared by several vendors of oil application systems are summarized in this section. For more detailed cost numbers, refer to Appendix B.

a. Analysis by Morrison Oil Company

Based on 1992 figures compiled by the Morrison Oil Company (a seller of white mineral oil to the grain handling industry), installation costs for an oil system supplying a 7,000,000 bushel/year elevator include about $6,400 for equipment, a 7,600-gallon bulk storage tank, and installation labor. Annual operating costs for such an elevator are about $24,700; over 90% of this amount is for the cost of oil [(10), p. 1-2]. Details of these costs and the assumptions used are presented in Appendix B-1.

Morrison Oil believes it is possible to recover the cost of the oil used. If the weight of the oil is sold as grain, 10,500 gallons at 7.2 pounds per gallon equals 75,600 pounds or 1,260

bushels at 60 lb/bushel. At $2.70/bushel, this selling of the oil as grain translates to a value of $3,402. In addition, assuming a handling loss of 0.14% (as reported by ASA) on 7,000,000 bushels, a loss of 9,800 bushels is realized. Assuming that 75% of the loss from a single handling is dust, this equals 7,350 bushels per handle per year. With the application of oil, this dust is now retained by the grain stream and can be sold as grain for $19,845, again using the $2.70/bushel figure. The total revenue recovered from selling the oil and dust as grain is, therefore, $23,247. Considering electricity, depreciation, repairs, and the cost of recovery described above, the net annual operating cost for this oil application system is $1,428 [(10), p. 4].

b. Analysis for Arco Prime DS Oil

A cost analysis was performed for an oil application system using the naphthenic-based, low-viscosity, food-grade white mineral oil Arco Prime DS, based on May 1987 average grain prices for wheat ($2.90/bushel), corn ($1.90/bushel), and soybeans ($5.60/bushel), and a $10/ton market value for dust. This evaluation assumed an annual throughput of 10,000,000 bushels for each grain type and a consumption of 15,000 gallons of oil for each type of grain processed. Calculations incorporated the cost of the oil and the selling of the oil and dust as grain, but equipment costs were not included. For wheat, the net cost of treating with oil was $1,925 or $0.0002/bushel; for corn, the net cost was $13,675, or $0.0014/bushel; but a net savings of $29,800, or $0.003/bushel was computed for soybeans [21].

c. Analysis by Phoenix Park Systems[1]

Phoenix Park Systems, a manufacturer of oil application equipment in Wenona, Illinois, advertises three models. The first, which has one point of application (spray head), costs roughly $5,000 when fully equipped. The second, which has two application points, costs about $7,400 fully equipped. The third model has three application points and costs about $9,900 fully equipped. These costs exclude the cost of storage tanks and oil, and appear to exclude labor costs [8]. (All costs are in 1992 dollars.) Details of these costs are found in Appendix B-2.

2. Oil Application System Costs for Existing Elevators

The following are cost outlays for oil application systems installed at existing grain elevators.

a. Avon Grain Company[1]

The Avon Grain Company in Carlisle, Iowa installed an oil application system in 1984 at a cost of $10,000 ($11,100 in 1992 dollars[2]), which included an 8,000-gallon tank. This system included electric in-line heaters to heat the oil to 70°F at the point of application. An

---

[1] The capacity and the throughput of the grain elevator were not indicated.

[2] Dollars normalized to 1992 values using *Plant Cost Indices* published by *Chemical Engineering*, McGraw-Hill, Inc., New York, NY.

annual savings of $30,000 ($33,300 in 1992 dollars) was calculated when compared to the maintenance and operating costs of running the elevators existing 13 pneumatic dust fans[3] [(22), p. 6, 7].

b. Heartland Co-op[4]

The Heartland Co-op in Minburn, Iowa procured a Dustop system in 1987 which included a pump and heater contained in a 3 ft x 1½ ft cabinet for less than $4,000 ($4,425 in 1992 dollars) [(22), p. 7].

3. Oil Costs

Once the equipment has been installed, the main expenditure is for the oil. In the United States the oil selected depends on the market price. The prices of soybean and mineral oil fluctuate, usually in opposition, depending on the soybean and petroleum markets. To exhibit a loyalty to their patrons, elevators processing soybeans often use soybean oil.

The most economical means of purchasing oil is in bulk from a tanker truck, but for small facilities using smaller amounts of oil annually, buying the oil in separate barrels is more practical. The average cost of applying paraffinic oil to grain is approximately $0.003 - 0.005/bushel [8]. Including shipping and handling, the cost of oil obtained from bulk shipments could be near $0.86/L ($3.25/gal), while oil purchased in barrels may cost up to $1.59/L ($6.00/gal) [(14), p.10].

C. CONVENTIONAL CONTROLS

1. Cost Analyses for Conventional Controls

Although conventional control systems are effective, the installation, operation, and maintenance costs are high. Researchers in 1982 found that the investment costs of dust control systems range from $144,500-$229,000 ($164,800-$261,200 in 1992 dollars) for elevators with an annual throughput up to 63.4 x 10^4 m^3 (18 million bushels) and may exceed $700,000 ($798,500 in 1992 dollars) for larger elevators, which may handle this amount of grain in one month. The capital cost of a new dust control system is estimated at $5-$10/ cfm of air controlled. Operating expenses include electrical power consumption, demand charges, and maintenance expense. Pneumatic systems (baghouses) must be inspected and serviced daily, and demand charges vary within the industry because they are based on peak power consumption [14].[5]

---

[3] No calculations were provided to substantiate this savings estimate.

[4] The capacity and the throughput of the grain elevator were not indicated.

[5] These costs only represent control device costs, excluding capture system costs.

A typical baghouse system installed on a 10' by 12' receiving pit will cost $40,000 to $55,000 ($45,600-$62,700 in 1992 dollars), excluding pit construction costs. When designing such a system, the following elements must be considered:

- Adequate room around the receiving pit must be reserved for aspiration equipment.
- To ensure efficient operation, the pit hopper must be properly designed.
- The method to be used by the elevator for returning dust to the grain must be identified, since most systems reintroduce the dust collected by the controls to the grain stream.
- The pit area should be minimized to handle vehicles delivering grain to the elevator, but the capacity should be large enough so that the grain remains below the bar grating. The smaller the area, the lower the system's air requirements and subsequent investment costs.

The two types of collectors include cloth bag filters and cyclones. However, the use of cyclones has decreased since they do not meet clean-air standards, grain can be lost, and visible emissions have been a problem. For most elevators, the bag filter is the preferred aspiration control for the receiving pit. The use of fans with either control ensures a more stable operation of the system and longer equipment life [23].

In 1977, as part of EPA's proposed standards of performance for the grain elevator industry, extensive cost estimates were made for conventional control technologies. It is not possible to summarize all of EPA's findings because of the many scenarios that were analyzed; however, EPA compiled capital and annualized costs for the best control technology for all grain processors. The characteristics for the grain processors model plant considered the following throughputs (million bushels/year) for the various grain types handled: 2.78 for wheat, 10 for wet corn, 2.88 for rice, 3.35 for dry corn, or 11.10 for soybean. The agency found that the total investment requirements for grain processors were $248,800 ($649,500 in 1992 dollars), and annual operating costs were $71,600 ($186,900 in 1992 dollars) [2].

D. COST COMPARISON - OIL APPLICATION AND CONVENTIONAL CONTROLS

1. Cost Simulation

In 1985, a systems engineering simulation was developed at Texas A&M University to estimate the costs of ventilation dust control systems (fabric filters) and oil application systems. The grain operations were identified as grain unloading, storing, conveying, loading, and dust handling. For the model, the system was split into three major subsystems: grain receiving, grain loading, and dust collection while conveying. The arrivals and departures of grain at an elevator were modeled and the annual grain throughput was related to energy consumption based on equipment capacities, efficiencies, and operational characteristics. The dust control system was running during any grain movement [14].

The following variables served as simulation inputs: annual grain throughput, elevator leg capacities, associated dust control ventilation horsepowers, investment cost of dust control

equipment, turnover rate, dust control operating time as a multiple of leg time, oil application level, cost of oil per liter, kilowatt-hour electrical energy rate, and power demand charge. Table 5-1 provides the elevator operating levels, equipment capacities, and investment costs used in the simulation.

TABLE 5-1: Operating Characteristics and Investment Cost of Model Elevators [(14), p.11]

Annual Throughput (million bu)	Leg Capacity (thous. bu/h)	Dust Control (hp)	Dust Control Investment Cost ($)	Annual Fixed Cost ($/thous. bu)[a]
1	20	180	144,500	20.01
5	30	188	157,500	4.36
10	40	235	223,000	3.09
18	80	440	229,000	1.76
25	85	465	300,000	1.66
40	140	680	700,000	2.42

[a] Annual Fixed cost assumed to be 13.85% of initial investment, including depreciation, interest on investment, insurance, and taxes.

The results of the simulation using the model elevator characteristics given in Table 5-1 and controlled by a conventional dust control system are provided in Table 5-2.

TABLE 5-2: Simulation Results - Conventional Dust Control [14, p.11]

Throughput (10^6 bu/yr)	Dust[a] Collected (tons)	Revenue[b] Lost as Dust ($)	Foreign[c] Matter Cost ($/thous. bu)	Electricity[d] Cost ($/thous. bu)	Total Cost ($/thous. bu)
0.9	97.9	9,071	10.08	7.65	37.7
5.6	665.0	61,678	11.01	3.00	18.4
10.7	1205.9	115,899	10.83	2.63	16.6
18.1	2126.3	197,006	10.86	2.90	15.5
25.2	2969.0	275,703	10.94	2.70	15.3
41.2	4851.2	449,480	10.91	2.43	13.3

[a] The dust collected was assumed to be 0.4% of the annual throughput.
[b] The revenue lost as dust was calculated at a rate of $2.55 per bushel.
[c] The foreign matter cost was calculated by dividing revenue lost as dust by the annual throughput.
[d] The electrical cost includes demand charges (assumed as a power factor of five times the combined load of 3-4 elevator leg dust-control systems) and an electricity rate of $0.10 per kWh.
[e] The total cost includes annual fixed cost (Table 5-1), variable cost (electricity cost), and foreign matter losses.

The results of the simulation using the model elevator characteristics given in Table 5-1 and controlled by an oil application system are provided in Table 5-3.

TABLE 5-3: Simulation Results - Oil Application Systems [14, p.11]

Throughput (10^6 bu/yr)	Oil Used (gallons/yr)	Storage Capacity (gallons)	Investment[a] Cost ($)	Total[b] Cost ($/thous. bu)
0.9	1744	555	2957	5.71
5.6	8692	2721	3385	5.11
10.7	16,830	5258	3886	5.11
18.1	28,322	8851	4593	5.11
25.2	38,388	11,995	5214	5.11
41.2	62,850	19,656	6720	5.11

a The investment cost was estimated at $1200 for basic oil application equipment including installation and storage costs. The basic system consisted of a pump, regulator, spray nozzle, and connecting lines. The storage costs were based on tank capacity, which was assumed to be one quarter of the annual use, plus 25% excess capacity.

b The total cost includes electrical energy, maintenance (3% of the initial investment), interest, depreciation, taxes on investments, and oil purchased at $3.50 per gallon.

It is not clear why the total cost per thousand bushels remains constant for all systems above 900,000 bushels throughput capacity. Perhaps the additional revenue recovered from selling dust and oil as grain offsets the increased cost of oil storage and usage.

The difference in cost between operating a conventional dust control system and an oil application system is provided in Table 5-4 below.

TABLE 5-4: Difference in Cost for Controls [14, p.11]

Throughput (10^6 bu/year)	Conventional Dust Control Total Cost ($/thousand bu)	Oil Application System Total Cost ($/thousand bu)	Net Savings ($/thousand bu)
0.9	37.7	5.71	31.99
5.6	18.4	5.11	13.29
10.7	16.6	5.11	11.49
18.1	15.5	5.11	10.39
25.2	15.3	5.11	10.19
41.2	13.3	5.11	8.19

This simulation illustrates the net savings realized when using an oil application system as opposed to a conventional dust control system. As shown in Table 5-4, greater economic benefits are yielded for smaller grain elevators. In the grain handling and processing industry, the various grain elevators have unique equipment layouts which may prevent application of the oil early in the process. For these situations, conventional dust-control systems may have to be used in conjunction with the oil application system, but the application of oil may enable the conventional controls to be shut off for part of the elevator's operation time [(14), p.11].

2. Comparison Cost Analysis

Costs provided by two companies have been compared and summarized here. The first is a comparison between an oil application system and a baghouse; the second is a cost comparison among options to repair an existing conventional control system, renovate the system, or purchase an oil application system.

a. Lyondell Petrochemical Co.

The following comparative economic analysis between an oil application system and a baghouse was performed in 1991 by Lyondell, a manufacturer of white grade mineral oil. Lyondell estimated capital investment for an oil application system at $11,500, and annual operating costs of $37,500 for a system on an elevator with a capacity of 8 million bushels per year. For a system on an elevator with a 12 million bushels/year capacity, the operating cost increased to $55,500.

Lyondell calculated operating costs for a baghouse. The annual operating costs for an oil application system were subtracted from those for the baghouse. (Lyondell provided no supporting documentation.) This resulted in an operating cost savings of almost $43,000 per year. Further, Lyondell calculated the savings from capturing the dust and selling it as grain to be about $31,200 for the 8 million bushel/year system, and $46,100 for the 12 million bushel/year system. The net annual benefits of operating an oil application system were calculated by Lyondell to be in excess of $30,000 [20]. Appendix B-3 details these calculations.

b. A Midwest Elevator Company

An unnamed Midwest elevator company performed a cost analysis to decide whether to repair or renovate its existing control system which included 11 cyclones, 13 fans, and a dust bin, or treat the grain with oil application.[6] Table 5-5 presents cost figures that apply to the elevator's options, and are in 1987 dollars:

---

[6] The capacity and the throughput of the grain elevator were not indicated.

TABLE 5-5: Midwest Elevator Company Cost Analysis [9]

		REPAIR	RENOVATE	OIL APPLICATION SYSTEM
ITEM		Mend cyclone holes	Install filter/baghouses	Continue air aspiration at receiving pit
		Replace some cones	Install pneumatic system	Shut down mechanical devices
		Replace two cones		Install oil application system
COST	Installation/ Capital	$63,000	$290,000	$40,000
	Annual Operating	$100,000	$100,000	$90,000 (oil costs)
TOTAL		**$163,000**	**$390,000**	**$130,000**

Based on these figures, the company determined that the installation of an oil application system could save them $30,000-$260,000 [9].

CHAPTER 6

CONCLUSIONS

Title V of the Clean Air Act Amendments of 1990 requires each State to develop and implement an operating permits program containing the elements outlined in 40 CFR Part 70. Pursuant to this program, sources will be required to pay operating fees based on the amount of pollutants emitted. In addition, stricter dust regulations and safety standards for grain elevators have been developed by the federal government. Many large companies have already implemented the equipment and operating procedures required by the new regulations, but smaller facilities that do not use mechanical dust control equipment may find oil application to be cost effective. Regulatory requirements and permitting costs have heightened industry's desire to use economical and efficient dust control methods and have increased interest in the use of oil application at grain handling facilities.

According to tests conducted by the U.S. Department of Agriculture and Texas A&M, oil application systems achieved control efficiencies comparable to those achieved by conventional controls (cyclones, and baghouses). Fabric filters demonstrate efficiencies higher than 99%; cyclones achieve efficiencies within the range of 85-99%; and the oil application system demonstrated high-end control efficiencies ranging from 85-98%, depending on the type of grain and the location tested. Average levels of dust reduction for all test locations and all grains ranged from 62% to 78%, while the average levels for the best controlled locations for each grain ranged from 72% to 91%. The gallery open belt was the best controlled location for three of the four grain-oil combinations tested, with dust reduction levels of 77%, 88%, and 91% achieved. Although these tests indicate a promising technology, EPA has concluded that these tests are inadequate for the purpose of determining emission factors for the application of oil suppression technology. As a result, the CTC is pursuing additional testing.

When compared to conventional controls, the operating and equipment costs of the oil application system appear to be significantly lower. Energy consumption of the oil system is negligible when compared to conventional controls, and the system requires little or no maintenance. As illustrated by analyses made by different vendors supplying the equipment and oil, thousands of dollars may be saved when using an oil application to control grain dust emissions. The oil application system seems to be an attractive alternative for smaller elevators that may not be able to afford installing expensive conventional controls.

The advantages of using oil application to suppress dust emissions are numerous. Since the dust remains entrained in the grain, housekeeping and dust disposal costs are reduced. There is less weight loss with each handling, and the dust attached to the grain surface can be sold as grain. Therefore, instead of paying to remove the dust from the elevator, the dust can now be sold. The use of oil may also extend the life of the equipment operating in the elevator since reduced dust contamination translates to cleaner moving parts. In addition, the decrease in

airborne dust improves the safety of the working environment by reducing the possibility of a grain elevator explosion.

The main disadvantage with the oil system is the market response to oil-treated grain. Although studies have demonstrated no significant effects on the quality of the grain, grain exporters are hesitant to purchase grain from an elevator using this control method because the acceptance of this method worldwide is not certain. Foreign markets are demanding grain based on higher quality standards, so exporters do not want to risk buying grain that may not be sellable. When compared to conventional controls, the application of oil for dust control is fairly new, with implementation occurring within the past decade. Once this uncertainty regarding the effect oil has on grain quality is resolved through additional testing, the main obstacle for this control system should be surmounted. Based on efficiency, economic, and safety factors, the oil application system appears to be an appealing technology for the grain handling industry.

REFERENCES

1. Anthony J. Buonicore and Wayne T. Davis, *Air Pollution Engineering Manual.* Air Pollution and Waste Management Association, (New York, 1992): pp. 517-528.

2. U.S. Environmental Protection Agency, *Standards Support and Environmental Impact Statement Volume 1: Proposed Standards of Performance for Grain Elevator Industry,* (Research Triangle Park, North Carolina, January 1977). EPA-450/2-77-001a.

3. U.S. Environmental Protection Agency, *Review of New Source Performance Standards for Grain Elevators,* (Research Triangle Park, North Carolina, January 1984). EPA-450/3-84-001.

4. Susan K. Robinson, "Edible Oils Prove Value As Dust Suppressants," *Agribusiness Worldwide* April 1989: 12-17.

5. Rudolph M. Morawek, "White Oil Treatments for Grain Dedusting Are Here," *Grain Age* March/April 1989: 5.

6. B.J. Lesikan, C.B. Parnell, Jr., and H.D. Wardlaw, Jr., "Dust Suppression Results with Mineral Oil Applications for Corn and Milo," International Winter Meeting of the American Society of Agricultural Engineers, 15-18 December 1987.

7. Susan Robinson, "Dust Suppression With Oil," *World Grain* January/February 1989: 8-13.

8. Phoenix Park Systems, (Cost analysis performed in 1990), Wenona, Illinois.

9. Gary L. Everett, *Effective Dust Suppression Using Mineral Oil,* (Texas, February 25, 1987).

10. Morrison Oil Company, (Cost analysis performed in 1992).

11. Fang S. Lai, Charles R. Martin, and Byron S. Miller, *Examining the Use of Additives to Control Grain Dust,* National Grain and Feed Association Fire and Explosion Research Report (Manhattan, Kansas: U.S. Department of Agriculture / U.S. Grain Marketing Research Laboratory, 1982).

12. David Jones, "Oil Additives to Reduce Grain Dust," *NebGuide* April 1990.

13. Ray Vrtiska, "Suppressing Dust with Oil-A Close Look,"

14. K.J. Goforth, D.D. Jones, and C.B. Parnell, Jr., "Using Oil Additive for Grain Dust Control," *Agricultural Engineering* September 1985: 9-12.

15. Lyondell Petrochemical Company, "Information About the Hardware Involved in the Use of Food Grade Mineral Oil for Dust Suppression," *Inflo-Topics in Lubricant Technology*, 1-3.

16. Tom Hegadorn, "Dust Control-Options Update", 46-48.

17. Kerry James Goforth, "Systems Simulation of Oil Additives to Grain at Terminal Elevators," diss., Texas A & M University, May 1985.

18. Ray Vrtiska, "Dust Suppression Gains Acceptance," *Grain Digest.*

19. Robert M. Frye, "Grain Handling and Storage-Dust Disposal Challenge: Who You Gonna Call? Dust Busters?," 181-183.

20. Lyondell Petrochemical Company / Lubricants, Cost analysis performed in 1991.

21. Lyondell Petrochemical Company, *Economic Considerations of Grain Dust Control with Mineral Oil* (Cost analysis performed 1983-5), Houston, Texas.

22. Farmland Insurance Companies, "Grain Facilities Discover Oil," *Foresight* May/June 1988: 6-11.

23. "Controlling Grain Dust Can be a Challenge," *Feed and Grain* June/July 1991: 18-19.

APPENDIX A

DUST REDUCTION FOR DIFFERENT GRAINS

TREATED WITH DIFFERENT OILS

This Page Intentionally Left Blank

Table 1. Percentage reduction in dust concentration for experimental lots of soybeans treated with soybean oil as an additive

Level of additive %	Dust control system	Pre-leg enclosed belt dust concentration %	Gallery open belt dust concentration %	Drop test dust concentration %	Bin overspace enclosed dust concentration %
0.03	on	76.3	70.6	98.6	88.2
0.03	off	65.6	97.2	97.3	89.5
0.03	off	1.8[a]	91.3	85.1	66.7
0.06	off	25.6	92.6	97.3	89.2

[a] Since this value is extremely low compared to the other results, it is assumed that a malfunction occurred during testing. No explanation was given as to why this number was obtained.

Table 2. Percentage reduction in dust concentration for experimental lots of wheat treated with soybean oil as an additive

Level of additive %	Dust control system	Pre-leg enclosed belt dust concentration %	Gallery open belt dust concentration %	Drop test dust concentration %	Bin overspace enclosed dust concentration %
0.02	off	63.3	77.0	95.9	70.7
0.02	off[a]	-156.2	-604.0	-987.7	6.5
0.03	on	21.3	28.6	94.2	50.9
0.03	off	44.0	75.0	95.9	85.2
0.03	off	37.6	60.0	90.4	82.7
0.06	off	43.1	71.0	95.9	85.1
0.06	off	55.1	64.0	95.9	89.3

[a] Since these values are not valid reduction percentages, it is assumed that a malfunction occurred during testing. No explanation was given as to why these numbers were obtained.

Table 3. Percentage reduction in dust concentration for experimental lots of corn treated with mineral oil as an additive

Level of additive %	Dust control system	Pre-leg enclosed belt dust concentration %	Gallery open belt dust concentration %	Drop test dust concentration %	Bin overspace enclosed dust concentration %
0.02	on	31.0	73.3	95.9	79.6
0.02	off	55.8	96.7	97.5	69.1
0.04	off	62.2	95.7	98.8	86.4
0.08	off	56.7	98.2	97.5	87.7

Table 4. Percentage reduction in dust concentration for experimental lots of corn treated with soybean oil as an additive

Level of additive %	Dust control system	Pre-leg enclosed belt dust concentration %	Gallery open belt dust concentration %	Drop test dust concentration %	Bin overspace enclosed dust concentration %
0.03	on	17.2	46.7	97.4	70.9
0.06	on	23.0	20.0	98.5	82.6
0.10	on	13.3	60.0	98.9	72.5
0.03	off	42.0	93.8	98.0	77.6
0.06	off	29.1	95.4	98.3	81.5
0.10	off	40.5	94.3	99.3	73.7
0.06[a]	off[b]	94.6	92.5	99.3	77.4

[a] Top sprayer on only.
[b] Dust control system on at pre-leg belt only.

APPENDIX B

CONTROL TECHNOLOGY COSTS

PROVIDED BY VENDORS

APPENDIX B-1

ANALYSIS BY MORRISON OIL COMPANY

Installation costs for an oil system include:

Dustop II (factory assembled system consisting of the following equipment: pump, flow regulators, relief valves, gauges, filters, control, solenoid switches, nozzles, and plumbing for 2 legs)	$3,505
7600 gallon bulk storage tank	$2,361
Installation Labor	$500
Total Installation Cost	**$ 6,366**

The annual operating cost analysis provided below includes the cost of the oil, electric power for the pump, and maintenance costs [11, p. 2]:

Electricity	$200
Depreciation	$1,275
Oil	$23,100
Repairs	$100
Total Annual Operating Cost	**$24,675**

These operating expenses were calculated using the following assumptions:

- the elevator handles 7,000,000 bushels per year;
- an installation cost of $6,366 based on a 5-year straight line depreciation; and
- the mineral oil is applied at 1½ gallons/1,000 bushels at $2.25/gallon (which translates to 1/3 of a cent/bushel).

APPENDIX B-2

ANALYSIS BY PHOENIX PARK SYSTEMS

The following cost figures were assembled by Phoenix Park Systems in Wenona, Illinois in 1990 for the various oil application system products it sells.

1. The Phoenix Park Base Unit With Heater (Model 1-DI), costing **$4,235**, consists of:

   Base Pump Module: ¼ HP motor/pump unit, flow meter, flow control, "auto-off-manual" mode switch, keyed power switch with indicator light, pump run light, depressurization mode light, 8 amp pop-out circuit breaker, 115 volt single phase.

   Heat Module: flow-through heater with thermostatic control, circuit breaker; on-off indicator lights for power on and thermostat operation, face-mounted thermometer with 0-180°F range.

   Spray Head: one spray nozzle complete with screen, 7 psi check valve and 18" flex connector for 3/8" line.

2. The Phoenix Park Two Application Point Unit (Model 2-DI) consists of two base pump modules and one heater module stacked with two spray heads, as described in the base unit (Model 1-DI). This system costs **$6,160**.

3. The Phoenix Park Three Application Point Unit (Model 3-DI) consists of three base pump modules and one heater module stacked with three spray heads. This system costs **$8,250**.

Additional miscellaneous equipment may be purchased as needed. Such parts include spray tips for the oil, a spray stand for belt conveyors, an explosion-proof paddle switch (which detects the presence of grain flow on the belt conveyor and starts and stops the application of oil), tape, an explosion-proof thermostat, and an ammeter relay. The price of add-on equipment ranges from $5 for the spray tips to $468 for the ammeter relay. Table 1 provides the prices for bulk storage tanks.

These cost figures apply to storage tanks made of carbon steel, vertical with 2" tee vent, 20" loose cover roof manhole, 18" shell manhole, 3" mild steel outlet, 1" sight gauge outlets, 3" up fill and tank tie-downs. The interior is sand blasted and coated with food grade epoxy and the exterior is coated with primer. Polyethylene or fiberglass tanks are also available.

TABLE 1: Storage Tank Costs

Capacity (Gallons)	Dimensions	Price
500	48" x 64"	$1,145.35
1000	48" x 128"	$1,748.00
2000	64" x 144"	$2,565.35
4100	8' x 11'	$3,813.35
6000	8' x 16'	$4,766.70
8250	8' x 22'	$5,677.35
10000	11' x 14'	$6,218.70

Costs for a typical oil-application system are as follows:

1. A system with one application point consists of the following equipment:

Model 1-DI	$4,235.00
Spray Lance (1)	76.00
Amp Relay (1)	196.50
100' PVC Pipe and fittings	35.00
100' Closed cell insulation	21.00
Wiring	400.00
	4,963.50

This system requires 24-36 man hours to install.

2. A system with two application points consists of the following equipment:

Model 2-DI	$6,160.00
Spray Lance (2)	152.00
Amp Relay (2)	393.00
100' PVC Pipe and fittings	70.00
100' Closed cell insulation	42.00
Wiring	590.00
	$7,407.00

This system requires 36-48 man hours to install.

3. A system with three application points consists of the following equipment:

Model 3-DI	$8,250.00
Spray Lance (3)	228.00
Amp Relay (3)	589.50
100' PVC Pipe and fittings	85.00
100' Closed cell insulation	65.00
Wiring	650.00
	$9867.50

This system requires 48-72 man hours to install.

The system costs provided for the three cases above will increase depending upon the storage tank size selected by the elevator operator, if a storage tank is used. Small elevators may elect to purchase the oil in barrels, thereby eliminating the need for a storage tank. These figures apply to equipment costs only and do not include the price of the oil [10].

APPENDIX B-3

COMPARATIVE ANALYSIS BY LYONDELL

The following comparative economic analysis between an oil application system and a baghouse was performed by Lyondell, a manufacturer of white grade mineral oil. The components of the cost of a food-grade mineral oil system include items in (i), below.

(i) *Capital Investment:*

Tank and pad	$4,000
Installation labor	$2,000
Electric controls, nozzles, regulators, etc.	$3,000
Pump and power unit	$1,500
Plumbing	$1,000
Total	**$11,500**

(ii) *Operating Costs:*

8 million bu/yr

Fixed costs	
Depreciation cost	$733
Interest cost	$690
Variable costs	
Maintenance cost	$150
Mineral oil cost	$35,937
Total	**$37,510**

12 million bu/yr

Fixed costs	
Depreciation cost	$733
Interest cost	$690
Variable costs	
Maintenance cost	$150
Mineral oil cost	$53,905
Total	**$55,478**

(iii) Operating Cost Savings Analysis:

Lyondell calculated operating costs for a baghouse. The operating costs for an oil application system were subtracted from those for the baghouse. The results are as follows:

Electrical energy	$16,650
Labor	$20,080
System maintenance	$3,550
Daily check	$2,510
Total	**$42,790**

(iv) Dust Capture Savings Analysis:

The dust capture savings were estimated to be $31,210 for an 8 million bu/yr system and $46,090 for an elevator handling 12 million bu/yr, based on selling the dust as grain using the following equation:

Dust Capture Savings = (Number of Bushels) x (Dust % Weight Loss) x (Cost/Bushel) x 75%

The following assumptions were made:

Wheat sold at $4.00/bushel
Oil Recovers 75% dust
Shrink/handling loss ranges from 0.10%-0.20%
(ASA indicated a shrink loss of 0.14% for each handling)

Based on the figures above, the annual savings realized when operating a mineral oil system instead of a baghouse are [20]:

	8 million bu/yr	12 million bu/yr
Mineral Oil System Cost	- $37,510	- $55,478
Savings over Pneumatic System	+ $42,790	+ $42,790
Dust Capture Savings	+ $31,210	+ $46,090
Net Mineral Oil System Savings	**+ $36,490**	**+ $33,402**

TECHNICAL REPORT DATA
(Please read Instructions on the reverse before completing)

1. REPORT NO. EPA-453/R-94-049	2.	3. RECIPIENT'S ACCESSION NO.
4. TITLE AND SUBTITLE Oil Suppression of Particulate Matter at Grain Elevators		5. REPORT DATE July 1994
		6. PERFORMING ORGANIZATION CODE
7. AUTHOR(S) R. Chettri and J. Phillips		8. PERFORMING ORGANIZATION REPORT NO.
9. PERFORMING ORGANIZATION NAME AND ADDRESS ViGYAN, Inc. 5203 Leesburg Pike, Suite 900 Falls Church, Va. 22041-3406		10. PROGRAM ELEMENT NO.
		11. CONTRACT/GRANT NO. 68-01-0073, WA I-34
12. SPONSORING AGENCY NAME AND ADDRESS Control Technology Center (MD-13) U.S. EPA, Office of Air Quality Planning and Standards Research Triangle Park, NC 27711		13. TYPE OF REPORT AND PERIOD COVERED Final
		14. SPONSORING AGENCY CODE

15. SUPPLEMENTARY NOTES
OAQPS project lead is Robert Blaszczak, MD-13, (919) 541-0800. The CTC is also sponsored by the Air and Energy Engineering Laboratory, ORD.

16. ABSTRACT

The Nebraska Department of Environmental Control (NE DEC) requested assistance from EPA's Control Technology Center (CTC) in the evaluation of oil suppression technology to control particulate matter (PM) emissions from grain elevators.

Grain elevators act as intermediate storage and transfer points for grain as it is transported from the farms to the market. The operations performed at elevators, including receiving, handling and transfer, drying, loading and shipping, generate emissions of PM in the form of grain dust, which is the pollutant of concern at elevators. The basic oil suppression system applies a fine spray of edible oil to the grain stream to coat the grain surface. The dust adheres to the oil on the grain, thereby decreasing the amount of airborne dust.

This report evaluates oil suppression systems and compares their cost and effectiveness to those of existing conventional controls used by elevators, specifically fabric filters and cyclones.

17. KEY WORDS AND DOCUMENT ANALYSIS

a. DESCRIPTORS	b. IDENTIFIERS/OPEN ENDED TERMS	c. COSATI Field/Group
Grain elevator Particulate matter Mineral oil Pollution	Pollution control Stationary source	

18. DISTRIBUTION STATEMENT Release to Public	19. SECURITY CLASS (This Report) Unclassified	21. NO. OF PAGES 56
	20. SECURITY CLASS (This page) Unclassified	22. PRICE

EPA Form 2220-1 (Rev. 4-77) PREVIOUS EDITION IS OBSOLETE